ENGINE MECHANICAL

SECTION EM

CONTENTS

QG

PRECAUTIONS 4
Parts Requiring Angular Tightening 4
Liquid Gasket Application Procedure 4
PREPARATION 5
Special Service Tools 5
Commercial Service Tools 7
NOISE, VIBRATION AND HARSHNESS (NVH) TROUBLESHOOTING 9
NVH Troubleshooting - Engine Noise 9
OUTER COMPONENT PARTS 11
Removal and Installation 11
MEASUREMENT OF COMPRESSION PRESSURE 15
DRIVE BELTS 16
Checking 16
AIR CLEANER 18
Cleaning and Changing 18
VISCOUS PAPER TYPE 18
DRY PAPER TYPE 18
SPARK PLUG 19
Checking and Changing 19
OIL PAN 20
Components 20
Removal 20
Installation 21
TIMING CHAIN 23
Components 23
Removal 24
Inspection 27
Installation 28
OIL SEAL 32
Replacement 32
VALVE OIL SEAL 32
FRONT OIL SEAL 32
REAR OIL SEAL 33
CYLINDER HEAD 34
Components 34
Removal 35
Disassembly 37
Inspection 37
CYLINDER HEAD DISTORTION 37
CAMSHAFT VISUAL CHECK 37
CAMSHAFT RUNOUT 38
CAMSHAFT CAM HEIGHT 38
CAMSHAFT JOURNAL CLEARANCE 38
CAMSHAFT END PLAY 39
CAMSHAFT SPROCKET RUNOUT 39
VALVE GUIDE CLEARANCE 39
VALVE GUIDE REPLACEMENT 40
VALVE SEATS 41
REPLACING VALVE SEAT FOR SERVICE PARTS 41
VALVE DIMENSIONS 42
VALVE SPRING 42
VALVE LIFTER AND VALVE SHIM 43
Valve Clearance 44
CHECKING 44
ADJUSTING 45
Assembly 46
Installation 47
ENGINE ASSEMBLY 51
Removal and Installation 51
REMOVAL 52
INSTALLATION 53
CYLINDER BLOCK 54
Components 54
Removal and Installation 55
Disassembly 55
PISTON AND CRANKSHAFT 55
Inspection 56
PISTON AND PISTON PIN CLEARANCE 56
PISTON RING SIDE CLEARANCE 56
PISTON RING END GAP 56
CONNECTING ROD BEND AND TORSION 57
CYLINDER BLOCK DISTORTION AND WEAR 57
PISTON-TO-BORE CLEARANCE 58
CRANKSHAFT 59
BEARING CLEARANCE 59
CONNECTING ROD BUSHING CLEARANCE (SMALL END) 61

CONTENTS (Cont'd)

REPLACEMENT OF CONNECTING ROD BUSHING (SMALL END) 62
FLYWHEEL/DRIVE PLATE RUNOUT 62
Assembly 62
PISTON 62
CRANKSHAFT 63
SERVICE DATA AND SPECIFICATIONS (SDS) 66
General Specifications 66
Compression Pressure 66
Belt Deflection 67
Spark Plug 67
Cylinder Head 67
Valve 68
VALVE 68
VALVE SPRING 68
VALVE LIFTER 68
VALVE CLEARANCE 69
VALVE GUIDE 69
AVAILABLE SHIMS 69
VALVE SEAT 71
VALVE SEAT RESURFACE LIMIT 72
Camshaft and Camshaft Bearing 72
Cylinder Block 73
Piston, Piston Ring and Piston Pin 74
PISTON 74
PISTON RING 74
PISTON PIN 74
Connecting Rod 75
Crankshaft 75
Main Bearing 75
STANDARD 75
UNDERSIZE 75
Connecting Rod Bearing 76
STANDARD SIZE 76
UNDERSIZE 76
Bearing Clearance 76
Miscellaneous Components 76

YD

PRECAUTIONS 77
Parts Requiring Angular Tightening 77
Liquid Gasket Application Procedure 77
PREPARATION 78
Special Service Tools 78
Commercial Service Tools 80
NOISE, VIBRATION AND HARSHNESS (NVH) TROUBLESHOOTING 82
NVH Troubleshooting - Engine Noise 82
MEASUREMENT OF COMPRESSION PRESSURE 83
DRIVE BELTS 85
Inspection 85
Adjustment 85
AIR CONDITIONER COMPRESSOR BELT 86
ALTERNATOR & WATER PUMP BELT 86
Removal 86
Installation 87
AIR CLEANER 88
Changing Air Cleaner Filter 88
VISCOUS PAPER TYPE 88
OIL PAN 89
Components 89
Removal 89
Installation 91
TIMING CHAIN 94
Secondary Timing Chain 94
REMOVAL 94
INSPECTION 96
INSTALLATION 96
Primary Timing Chain 99
REMOVAL 100
INSPECTION 102
INSTALLATION 102
INTAKE MANIFOLD 107
Removal and Installation 107
PREPARATIVE WORK 107
FUEL PIPING 108
INTAKE MANIFOLD 108
EGR VOLUME CONTROL VALVE 108
WATER HOSE 108
Inspection 109
INTAKE MANIFOLD 109
CATALYST 110
Removal and Installation 110
PREPARATIVE WORK 110
CATALYST 110
GUSSET 111
EXHAUST MANIFOLD, TURBOCHARGER 112
Removal and Installation 112
PREPARATIVE WORK 112
EXHAUST MANIFOLD AND TURBOCHARGER 112
EXHAUST MANIFOLD GASKET 113
Disassembly and Assembly 113
TURBOCHARGER 113
Inspection 114
EXHAUST MANIFOLD 114
TURBOCHARGER 114
ROCKER COVER 117
Removal and Installation 117
PREPARATIVE WORK 117
ROCKER COVER 117
CYLINDER HEAD 119
Components 119
Removal 120
PREPARATIVE WORK 120
CAMSHAFT 120
CYLINDER HEAD 121
Disassembly 121
Inspection 122

CONTENTS (Cont'd)

CYLINDER HEAD DISTORTION 122
CAMSHAFT VISUAL CHECK 123
CAMSHAFT RUNOUT 123
CAMSHAFT CAM HEIGHT 123
CAMSHAFT JOURNAL CLEARANCE 123
CAMSHAFT END PLAY 124
CAMSHAFT SPROCKET RUNOUT 124
VALVE GUIDE CLEARANCE 124
VALVE GUIDE REPLACEMENT 125
VALVE SEATS 126
REPLACING VALVE SEAT FOR SERVICE PARTS ..126
VALVE DIMENSIONS 128
VALVE SPRING 128
VALVE LIFTER 128
Assembly 129
Installation 129
CYLINDER HEAD GASKET SELECTION 130
CYLINDER HEAD BOLT DEFORMATION CHECK ...131
CYLINDER HEAD-TO-BLOCK DIFFERENCE CHECK 131
LIQUID GASKET APPLICATION ON REAR CHAIN CASE 131
CYLINDER HEAD INSTALLATION 132
GLOW PLUG INSTALLATION 132
CAMSHAFT INSTALLATION 132
Valve Clearance 133
CHECKING 133
ADJUSTING 134
ENGINE ASSEMBLY 137
Removal and Installation 137
REMOVAL 138
INSTALLATION 139
CYLINDER BLOCK 140
Components 140
Removal and Installation 141
Disassembly 141
PISTON AND CRANKSHAFT 141
Inspection 144
CRANKSHAFT END PLAY 144
CONNECTING ROD SIDE CLEARANCE 144
PISTON AND PISTON PIN CLEARANCE 145
PISTON RING SIDE CLEARANCE 145
PISTON RING END GAP 145
CONNECTING ROD BEND AND TORSION 146
CYLINDER BLOCK DISTORTION AND WEAR 146
PISTON-TO-BORE CLEARANCE 147
CRANKSHAFT 148
MAIN BEARING HOUSING INNER DIAMETER 149
BEARING CLEARANCE 149
MAIN BEARING CRUSH HEIGHT 153
MAIN BEARING CAP BOLT DEFORMATION 153
CONNECTING ROD BUSHING CLEARANCE (SMALL END) 153
CONNECTING ROD BOLT DEFORMATION 154
FLYWHEEL RUNOUT 154
OIL JET 154
OIL JET RELIEF VALVE 154
Assembly 155
PISTON 155
CRANKSHAFT 155
REPLACEMENT OF PILOT BUSHING 158
SERVICE DATA AND SPECIFICATIONS (SDS) 160
General Specifications 160
Compression Pressure 160
Belt Deflection 160
Cylinder Head 160
Valve 161
VALVE 161
VALVE CLEARANCE 161
AVAILABLE SHIMS 161
VALVE SPRING 162
VALVE LIFTER 162
VALVE GUIDE 163
Valve Seat 164
Camshaft and Camshaft Bearing 166
Cylinder Block 167
Piston, Piston Ring and Piston Pin 167
AVAILABLE PISTON 167
PISTON RING 168
PISTON PIN 168
Connecting Rod 168
Crankshaft 168
Available Main Bearing 169
UNDERSIZE 169
Available Connecting Rod Bearing 169
CONNECTING ROD BEARING 169
UNDERSIZE 170
Miscellaneous Components 170
BEARING CLEARANCE 170

Parts Requiring Angular Tightening

NJEM0001

- Use an angle wrench for the final tightening of the following engine parts:

a) Cylinder head bolts
b) Main bearing cap bolts
c) Connecting rod cap nuts

- Do not use a torque value for final tightening.
- The torque value for these parts are for a preliminary step.
- Ensure thread and seat surfaces are clean and coated with engine oil.

Liquid Gasket Application Procedure

NJEM0002

1. **Use a scraper to remove old liquid gasket from mating surfaces and grooves. Also, completely clean any oil from these areas.**
2. **Apply a continuous bead of liquid gasket to mating surfaces. (Use Genuine Liquid Gasket or equivalent.)**

- **For oil pan, be sure liquid gasket diameter is 3.5 to 4.5 mm (0.138 to 0.177 in).**
- **For areas except oil pan, be sure liquid gasket diameter is 2.0 to 3.0 mm (0.079 to 0.118 in).**

3. **Apply liquid gasket around the inner side of bolt holes (unless otherwise specified).**
4. **Assembly should be done within 5 minutes after coating.**
5. **Wait at least 30 minutes before refilling engine oil and engine coolant.**

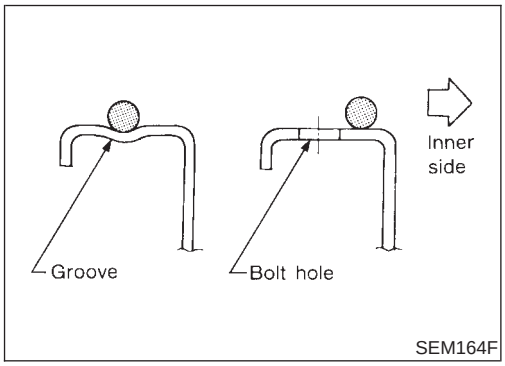

SEM164F

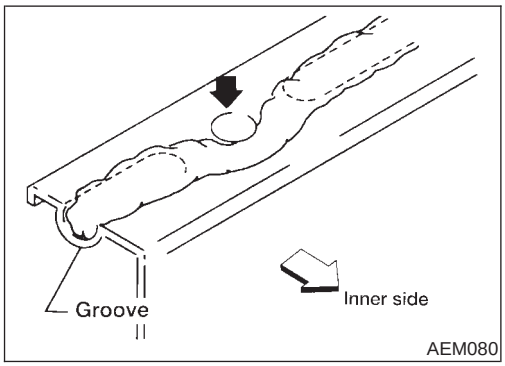

AEM080

Special Service Tools

NJEM0003

Tool number Tool name	Description	
ST0501S000 Engine stand assembly (1) ST05011000 Engine stand (2) ST05012000 Base	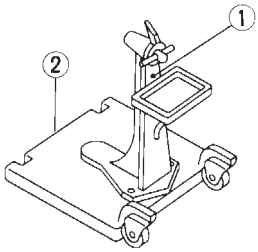 NT042	Disassembling and assembling
Engine attachment assembly (1) KV10106500 Engine attachment (2) KV10113300 Sub-attachment	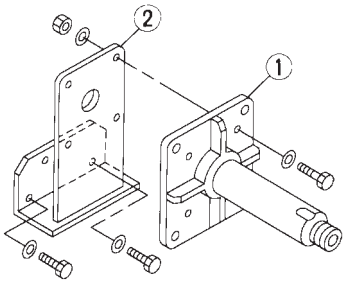 NT029	Overhauling engine
ST10120000 Cylinder head bolt wrench	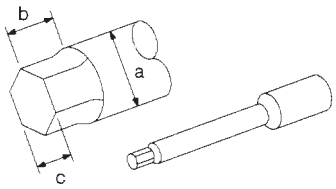 NT583	Loosening and tightening cylinder head bolt **a: 13 mm (0.51 in) dia.** **b: 12 mm (0.47 in)** **c: 10 mm (0.39 in)**
KV10116200 Valve spring compressor (1) KV10115900 Attachment	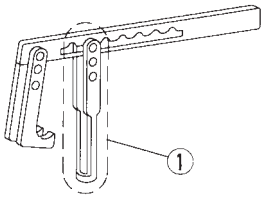 NT022	Disassembling valve mechanism
KV10115600 Valve oil seal drift	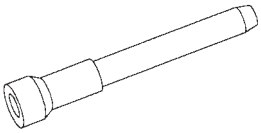 NT024	Installing valve oil seal
KV10107902 Valve oil seal puller	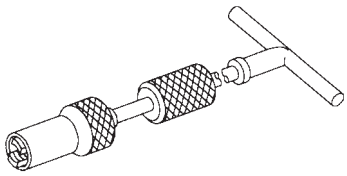 NT011	Displacement valve lip seal

Special Service Tools (Cont'd)

Tool number Tool name	Description	
KV101151S0 Lifter stopper set (1) KV10115110 Camshaft pliers (2) KV10115120 Lifter stopper	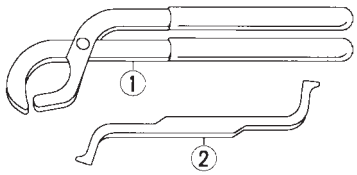 NT041	Changing shims
EM03470000 Piston ring compressor	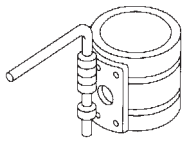 NT044	Installing piston assembly into cylinder bore
KV10107400 Piston pin press stand (1) KV10107310 Center shaft (2) ST13040020 Stand (3) ST13040030 Spring (4) KV10107320 Cap (5) ST13040050 Drift	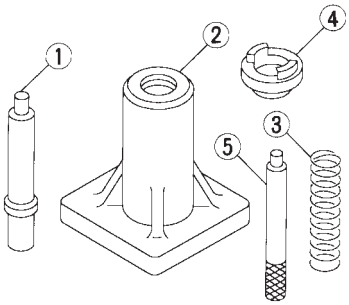 NT013	Disassembling and assembling piston pin
KV10111100 Seal cutter	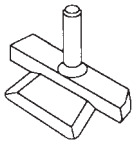 NT046	Removing oil pan
WS39930000 Tube presser	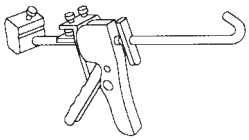 NT052	Pressing the tube of liquid gasket
KV10112100 Angle wrench	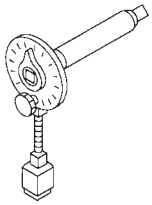 NT014	Tightening bolts for bearing cap, cylinder head, etc.
ST16610001 Pilot bushing puller	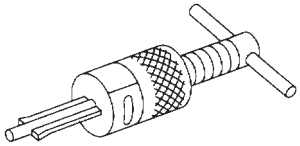 NT045	Removing pilot bushing

Tool number Tool name	Description	
Front (heated) oxygen sensor wrench	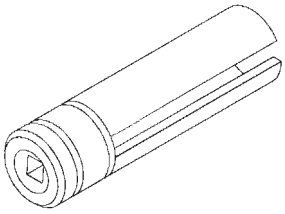 NT379	Loosening or tightening heated oxygen sensor with 22 mm (0.87 in) hexagon nut
KV101056S0* Rear gear stopper (1) KV10105620 Adapter (2) KV10105610 Plate assembly	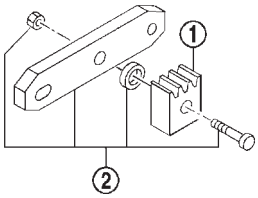 NT773	Preventing crankshaft from rotating

Commercial Service Tools

NJEM0004

Tool name	Description	
Spark plug wrench	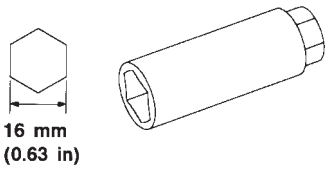 NT047	Removing and installing spark plug
Valve seat cutter set	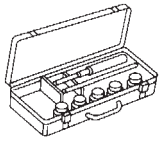 NT048	Finishing valve seat dimensions
Piston ring expander	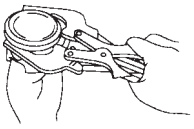 NT030	Removing and installing piston ring
Valve guide drift	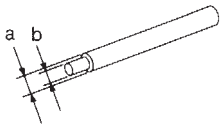 NT015	Removing and installing valve guide **Intake & Exhaust:** **a: 9.5 mm (0.374 in) dia.** **b: 5.5 mm (0.217 in) dia.**

Commercial Service Tools (Cont'd)

Tool name	Description	
Valve guide reamer	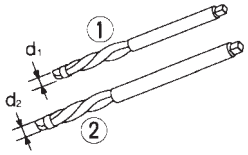 NT016	Reaming valve guide **1** or hole for oversize valve guide **2** **Intake & Exhaust:** **d_1: 5.5 mm (0.217 in) dia.** **d_2: 9.685 mm (0.3813 in) dia.**
Front oil seal drift	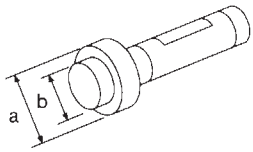 NT049	Installing front oil seal **a: 52 mm (2.05 in) dia.** **b: 40 mm (1.57 in) dia.**
Rear oil seal drift	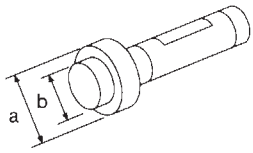 NT049	Installing rear oil seal **a: 103 mm (4.06 in) dia.** **b: 84 mm (3.31 in) dia.**
Oxygen sensor thread cleaner	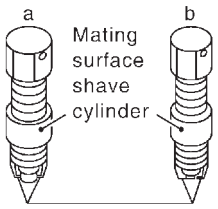 NT778	Reconditioning the exhaust system threads before installing a new oxygen sensor. Use with anti-seize lubricant shown below. **a: 18 mm dia. with a pitch of 1.5 mm for Zirconia Oxygen Sensor** **b: 12 mm dia. with a pitch of 1.25 mm for Titania Oxygen Sensor**
Anti-seize lubricant (Permatex™ 133AR or equivalent meeting MIL specification MIL-A-907)	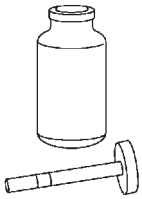 NT779	Lubricating oxygen sensor thread cleaning tool when reconditioning exhaust system threads

NVH Troubleshooting — Engine Noise

NJEM0005S01

Use the chart below to help you find the cause of the symptom.

1. Locate the area where noise occurs.
2. Confirm the type of noise.
3. Specify the operating condition of engine.
4. Check specified noise source.

If necessary, repair or replace these parts.

Location of noise	Type of noise	Operating condition of engine						Source of noise	Check item	Reference page
		Before warm-up	After warm-up	When starting	When idling	When racing	While driving			
Top of Engine Rocket Cover Cylinder Head	Ticking or click	C	A	—	A	B	—	Tappet noise	● Valve clearance	EM-44
	Rattle	C	A	—	A	B	C	Camshaft bearing noise	● Camshaft journal clearance ● Camshaft runout	EM-38
Crankshaft Pulley Cylinder block (Side of Engine) Oil pan	Slap or knock	—	A	—	B	B	—	Piston pin noise	● Piston and piston pin clearance ● Connecting rod bushing clearance	EM-56, 61
	Slap or rap	A	—	—	B	B	A	Piston slap noise	● Piston-to-bore clearance ● Piston ring side clearance ● Piston ring end gap ● Connecting rod bend and torsion	EM-56, 57, 58
	Knock	A	B	C	B	B	B	Connecting rod-bearing noise	● Connecting rod bearing clearance (Big end) ● Connecting rod bushing clearance (Small end)	EM-60, 61
	Knock	A	B	—	A	B	C	Main bearing noise	● Main bearing oil clearance ● Crankshaft runout	EM-59
Front of Engine Timing Chain Cover	Tapping or ticking	A	A	—	B	B	B	Timing chain and chain tensioner noise	● Timing chain cracks and wear ● Timing chain tensioner operation	EM-27
Front of Engine	Squeak or fizzing	A	B	—	B	—	C	Other drive belts (sticking or slipping)	● Drive belts deflection	EM-16
	Creaking	A	B	A	B	A	B	Other drive belts (slipping)	● Idler pulley bearing operation	
	Squall or creak	A	B	—	B	A	B	Water pump noise	● Water pump operation	LC-14

A: Closely related B: Related C: Sometimes related —: Not related

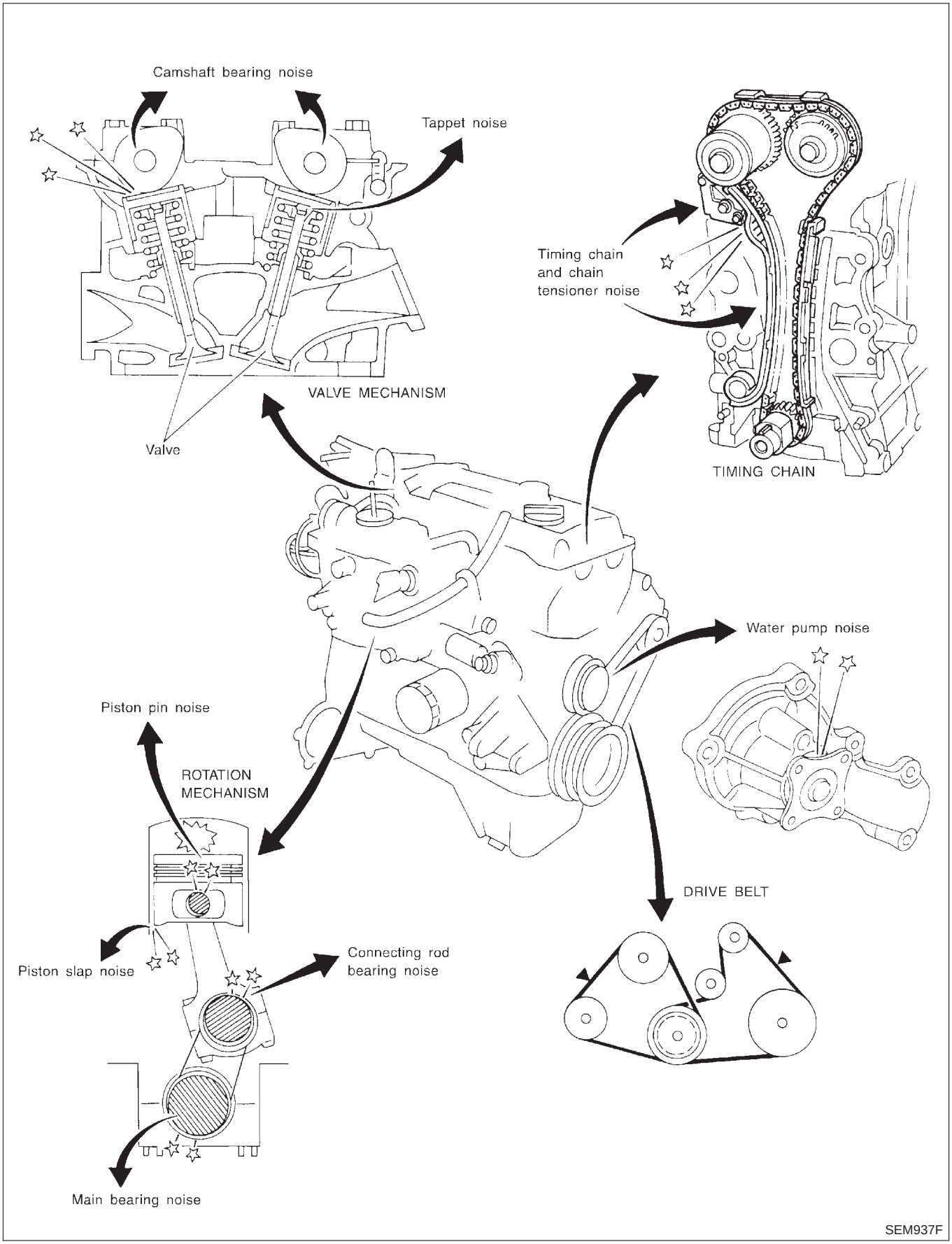
Camshaft bearing noise
Tappet noise
VALVE MECHANISM
Valve
Timing chain
and chain
tensioner noise
TIMING CHAIN
Water pump noise
Piston pin noise
ROTATION
MECHANISM
Piston slap noise
Connecting rod
bearing noise
Main bearing noise
DRIVE BELT
SEM937F

Removal and Installation

NJEM0006

SEC. 140•147•150•210

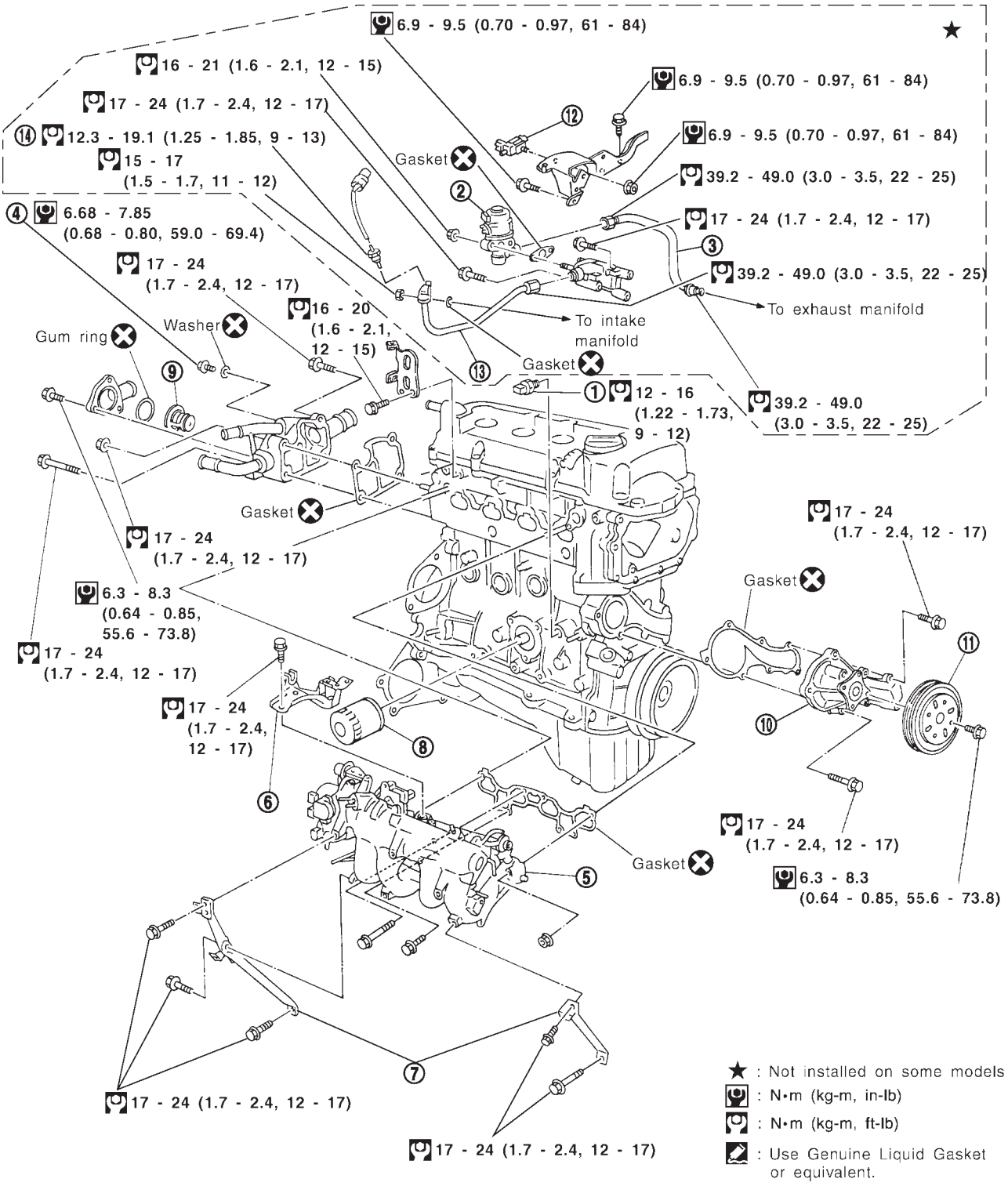

YEM008

1. Oil pressure switch
2. EGR valve*
3. EGR tube*
4. Air relief plug
5. Intake manifold
6. Intake manifold upper support
7. Intake manifold rear supports
8. Oil filter
9. Thermostat
10. Water pump
11. Water pump pulley
12. EGR solenoid valve*
13. EGR guide tube*
14. EGR gas temperature sensor*

*: If so equipped

SEC. 140•163•164•223
Models with swirl control solenoid valve

6.9 - 9.5 (0.70 - 0.97, 61 - 84)

1st 12 - 14 (1.2 - 1.5, 9 - 10)
2nd 17 - 23 (1.7 - 2.4, 13 - 17)

6.9 - 9.5 (0.70 - 0.97, 61 - 84)

6.9 - 9.5 (0.70 - 0.97, 61 - 84)

2.9 - 3.8 (0.30 - 0.39, 26.0 - 33.9)

6.9 - 9.5 (0.70 - 0.97, 60.8 - 84.2)

Locating hole

O-ring

2.0 - 2.5 (0.20 - 0.26, 17.4 - 22.6)

To air duct

6.9 - 9.5 (0.70 - 0.97, 60.8 - 84.2)

Clip

O-ring

Gasket

Gasket

Gasket

6.9 - 9.5 (0.70 - 0.97, 60.8 - 84.2)

3.0 - 4.0 (0.31 - 0.41, 26.9 - 35.6)

★17 - 24 (1.7 - 2.4, 12 - 17)

★17 - 24 (1.7 - 2.4, 12 - 17)

: N•m (kg-m, in-lb)

: N•m (kg-m, ft-lb)

★One way valve installing direction

Swirl control solenoid side

Color paint

Intake manifold side

★Intake manifold bolts and nuts tightening order

Engine front

Tighten in numerical order.

★Throttle body bolts tightening procedure

1) Tighten all bolts to 9 to 11 N•m (0.9 to 1.1 kg-m, 6.5 to 8.0 ft-lb)
2) Tighten all bolts to 18 to 22 N•m (1.8 to 2.2 kg-m, 13 to 16 ft-lb)

Tighten in numerical order.

YEM009

1. Throttle position sensor
2. IACV-AAC valve
3. Throttle body
4. Injector
5. Injector tube
6. Pressure regulator
7. Intake manifold
8. Canister purge control valve
9. Throttle opener*
10. One way valve*
11. Vacuum tank*
12. Swirl control solenoid valve*

*: If so equipped

SEC. 140•163•164•223
Models without swirl control solenoid valve

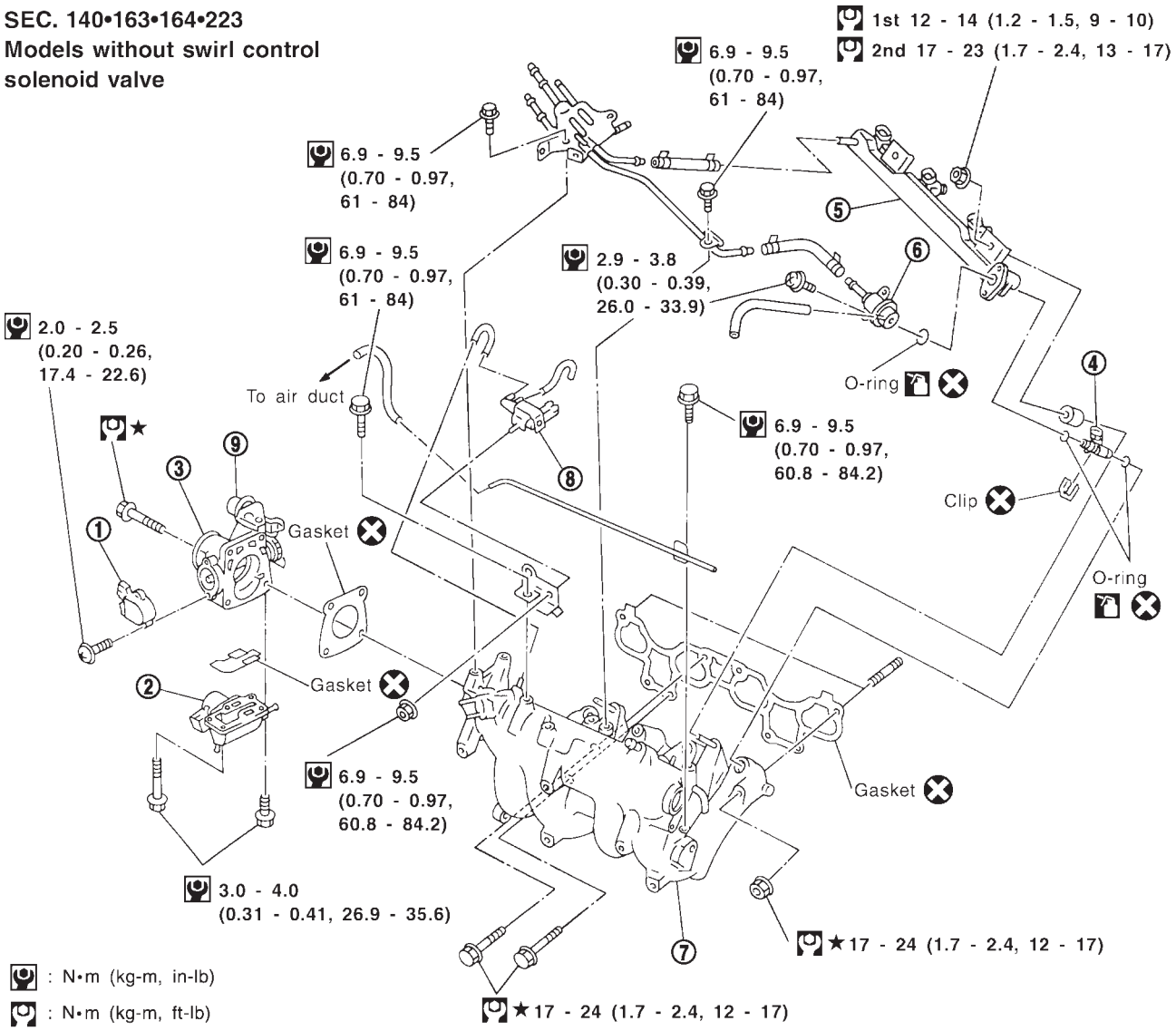

★Intake manifold bolts and nuts tightening order

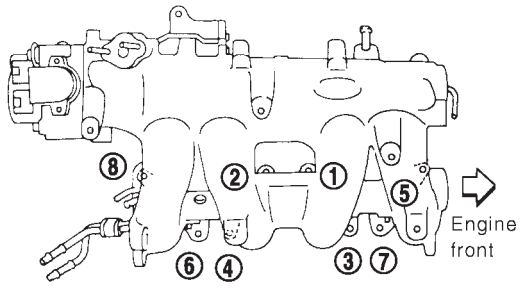

Tighten in numerical order

★Throttle body bolts tightening procedure

1) Tighten all bolts to 9 to 11 N•m (0.9 to 1.1 kg-m, 6.5 to 8.0 ft-lb)
2) Tighten all bolts to 18 to 22 N•m (1.8 to 2.2 kg-m, 13 to 16 ft-lb)

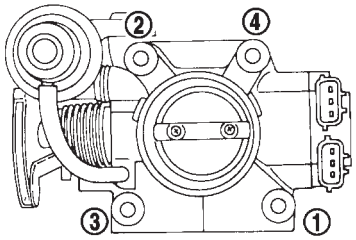

Tighten in numerical order.

YEM010

1. Throttle position sensor
2. IACV-AAC valve
3. Throttle body
4. Injector
5. Injector tube
6. Pressure regulator
7. Intake manifold
8. Canister purge control valve
9. Throttle opener (If so equipped)

SEC. 140•208•210•220•226•253

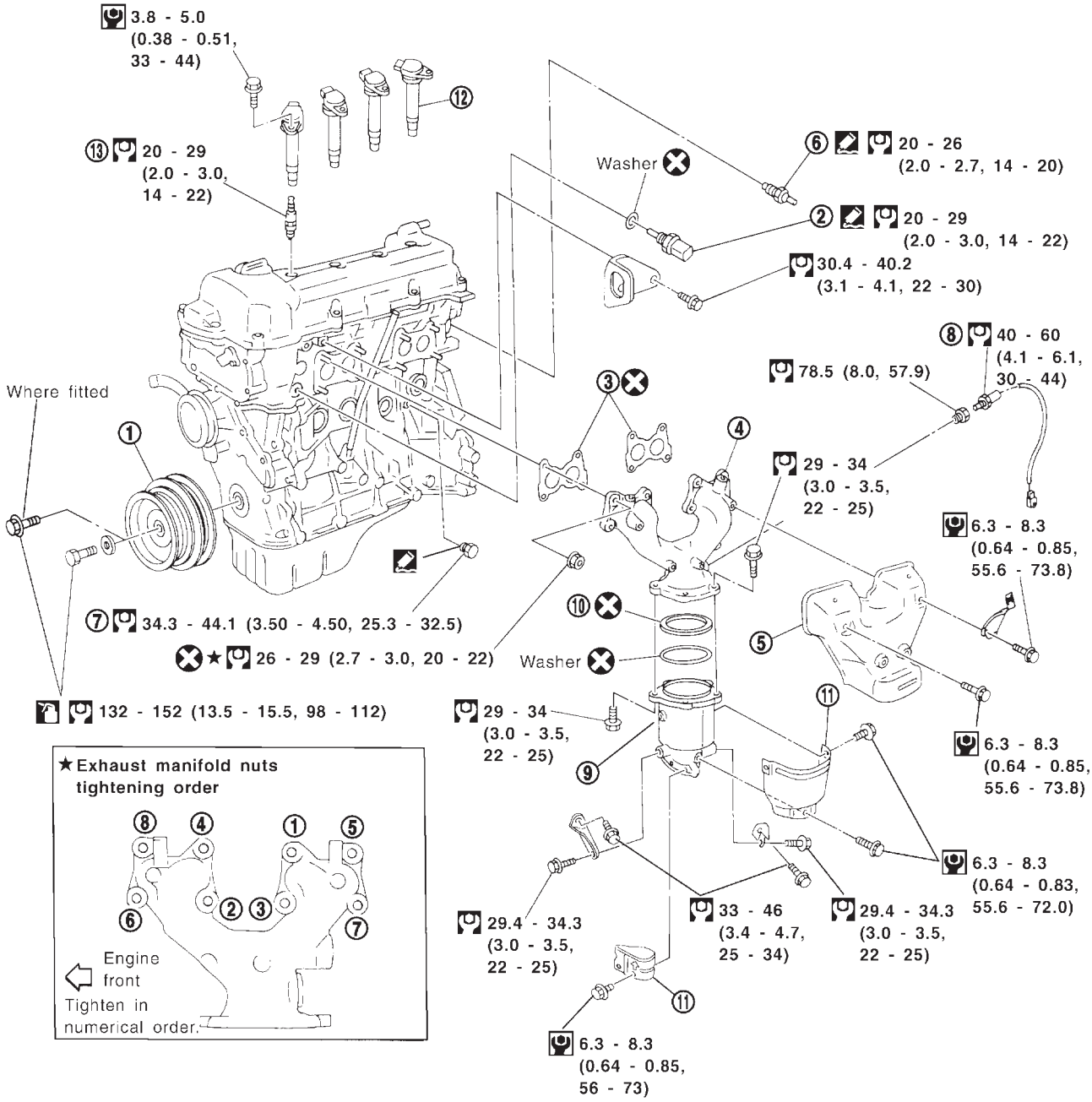

: N•m (kg-m, in-lb)

: N•m (kg-m, ft-lb)

: Use Genuine Liquid Gasket or equivalent.

: Lubricate with new engine oil.

YEM011

1. Crankshaft pulley
2. Engine coolant temperature
3. Gasket
4. Exhaust manifold
5. Exhaust manifold cover
6. Thermal transmitter
7. Water drain plug
8. Heated oxygen sensor 1 (front)
9. Three way catalyst
10. Converter cap
11. Converter cover
12. Ignition coil
13. Spark plug

MEASUREMENT OF COMPRESSION PRESSURE

1. Warm up engine.
2. Turn ignition switch OFF.
3. Release fuel pressure.
   Refer to EC-40, “Releasing Fuel Pressure”.
4. Remove ignition coils.
5. Remove spark plugs.

- Clean area around plug with compressed air before removing the spark plug.

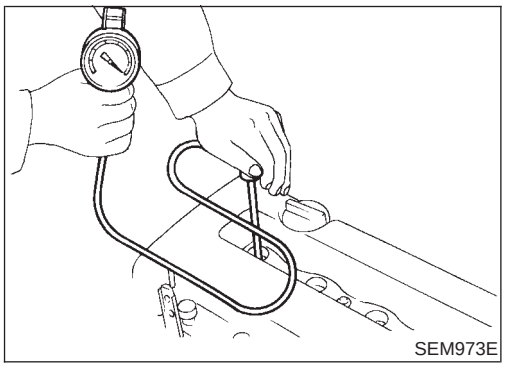

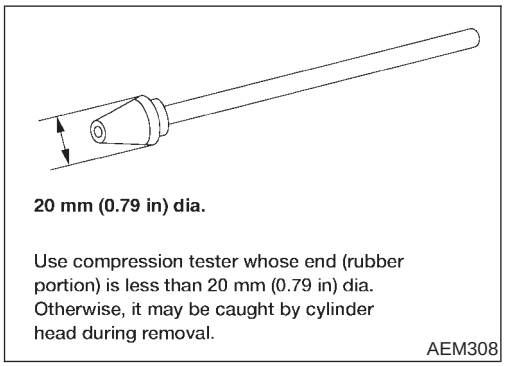

6. Attach a compression tester to No. 1 cylinder.
7. Depress accelerator pedal fully to keep throttle valve wide open.
8. Crank engine and record highest gauge indication.
9. Repeat the measurement on each cylinder as shown above.

- **Always use a fully-charged battery to obtain specified engine speed.**

Compression pressure: kPa (bar, kg/cm^2, psi)/rpm

Except for QG15DE

Standard
1,324 (13.24, 13.5, 192)/350
Minimum
1,128 (11.28, 11.5, 164)/350
Maximum allowable difference between cylinders
98 (0.98, 1.0, 14)/350

QG15DE

Standard
1,372 (13.720, 13.99, 198.9)/350
Minimum
1,176 (11.759, 11.99, 170.5)/350
Maximum allowable difference between cylinders
98 (0.98, 1.0, 14)/350

10. If cylinder compression in one or more cylinders is low, pour a small amount of engine oil into the cylinder through the spark plug hole and retest compression.

- **If adding oil improves cylinder compression, piston rings may be worn or damaged. If so, replace piston rings after checking piston.**
- **If pressure stays low, a valve may be sticking or seating improperly. Inspect and repair valve and valve seat. Refer to SDS, EM-71. If valve or valve seat is damaged excessively, replace them.**
- If compression in any two adjacent cylinders is low and if adding oil does not improve compression, there is leakage past the gasket surface. If so, replace cylinder head gasket.

11. Reinstall spark plugs, ignition coils and fuel pump fuse.
12. Perform “Self-diagnosis Procedure” referring to EC-70, “How to Erase DTC” if any DTC appears.

Checking

NJEM0042

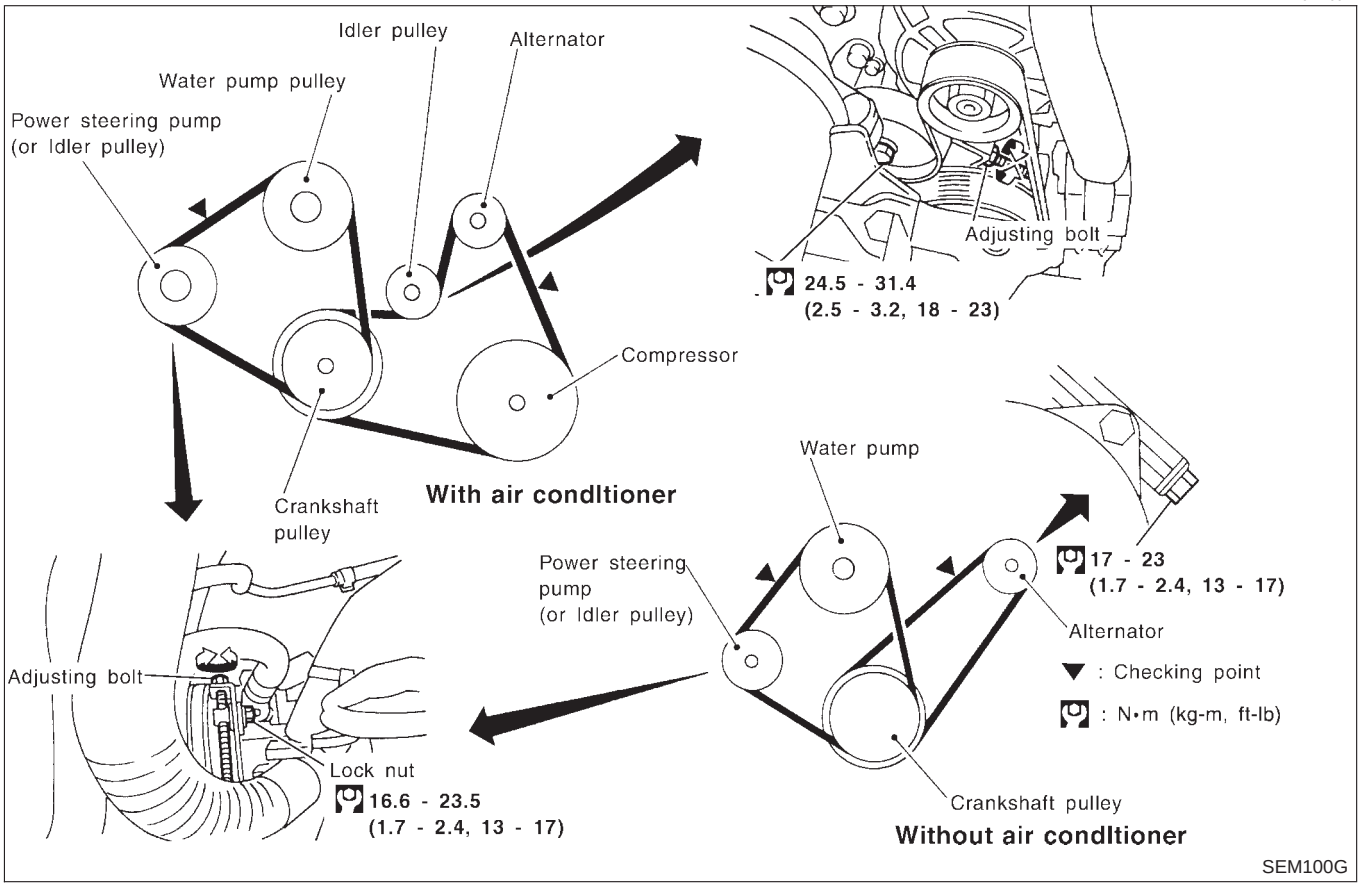

1. Inspect for cracks, fraying, wear or oil adhesion. If necessary, replace with a new one.

- When replacing belt, make sure the new belt has the same number of ribs as the old one.

2. Inspect drive belt deflections by pushing on the belt midway between pulleys.
3. Turn crankshaft two revolutions and recheck drive belt deflection.

- **Inspect drive belt deflection when engine is cold.**
- **Adjust if belt deflections exceed the limit.**

Belt deflection:

Unit: mm (in)

		Applied engine	Used belt deflection		Deflection of new belt
			Limit	Deflection after adjustment	
Alternator	With air conditioner compressor	QG15·18DE	8.1 (0.319)	5.3 - 5.7 (0.209 - 0.224)	4.5 - 5.0 (0.177 - 0.197)
	Without air conditioner compressor	QG15·18DE	10.2 (0.402)	6.5 - 7.0 (0.256 - 0.276)	5.5 - 6.1 (0.217 - 0.240)
Power steering oil pump		Sedan with QG15DE	8.5 (0.335)	5.2 - 5.8 (0.205 - 0.228)	4.6 - 5.2 (0.181 - 0.205)
		Except for Sedan with QG15DE	7.1 (0.280)	4.4 - 4.9 (0.173 - 0.193)	3.9 - 4.4 (0.154 - 0.173)
Applied pushing force		98 N (10 kg, 22 lb)			

Inspect drive belt deflections when engine is cold.

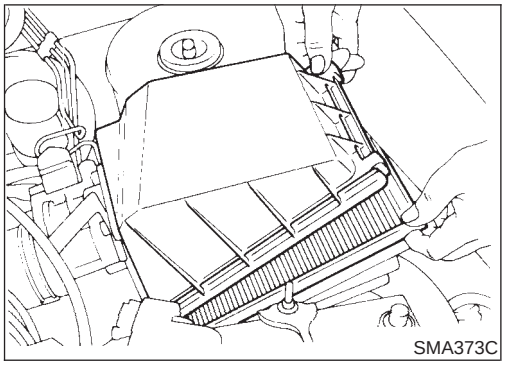
SMA373C

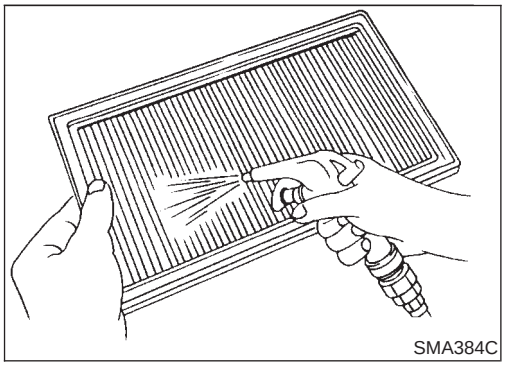
SMA384C

Cleaning and Changing

NJEM0043

VISCOUS PAPER TYPE

NJEM0043S01

The viscous paper type filter does not need cleaning between renewals.

DRY PAPER TYPE

NJEM0043S02

Clean or replace element more often under dusty driving conditions.

Checking and Changing

NJEM0044

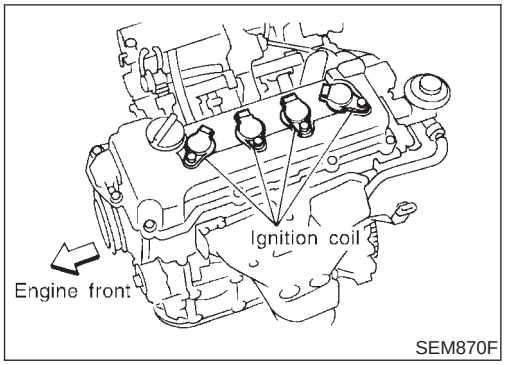

SEM870F

1. Disconnect ignition coil harness connectors.
2. Remove ignition coils.

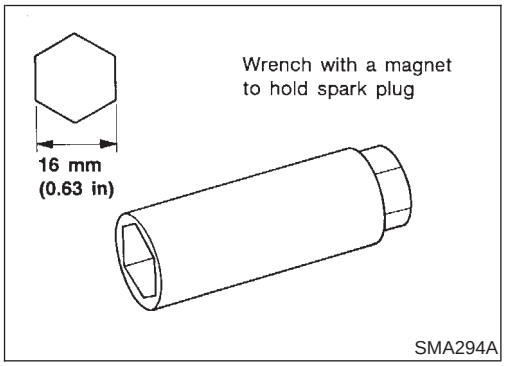

SMA294A

3. Remove spark plugs with spark plug wrench.
4. Clean plugs in sand blast cleaner.
5. Check insulator for cracks or chips, gasket for damage or deterioration and electrode for wear and burning. If they are excessively worn away, replace with new spark plugs.
6. Check spark plug gap.

Spark plug:

		NGK	Champion
Type	Standard	BKR5E-11	RC10YC4
	Hot	BKR4E-11	—
	Cold	BKR6E-11	—
Plug gap mm (in)		1.0 - 1.1 (0.039 - 0.043)	

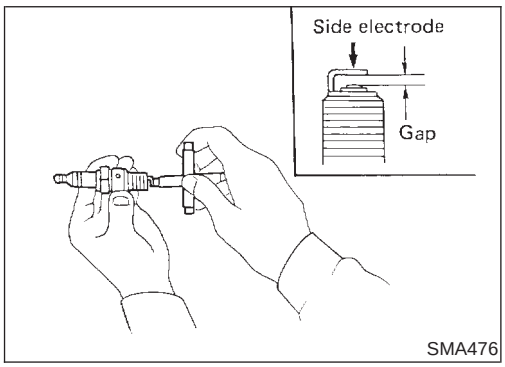

SMA476

7. Install spark plugs.

   Spark plug:

   : 20 - 29 N·m (2.0 - 3.0 kg-m, 14 - 22 ft-lb)
8. Install ignition coils.
9. Connect ignition coil harness connectors.

Components

NJEM0008

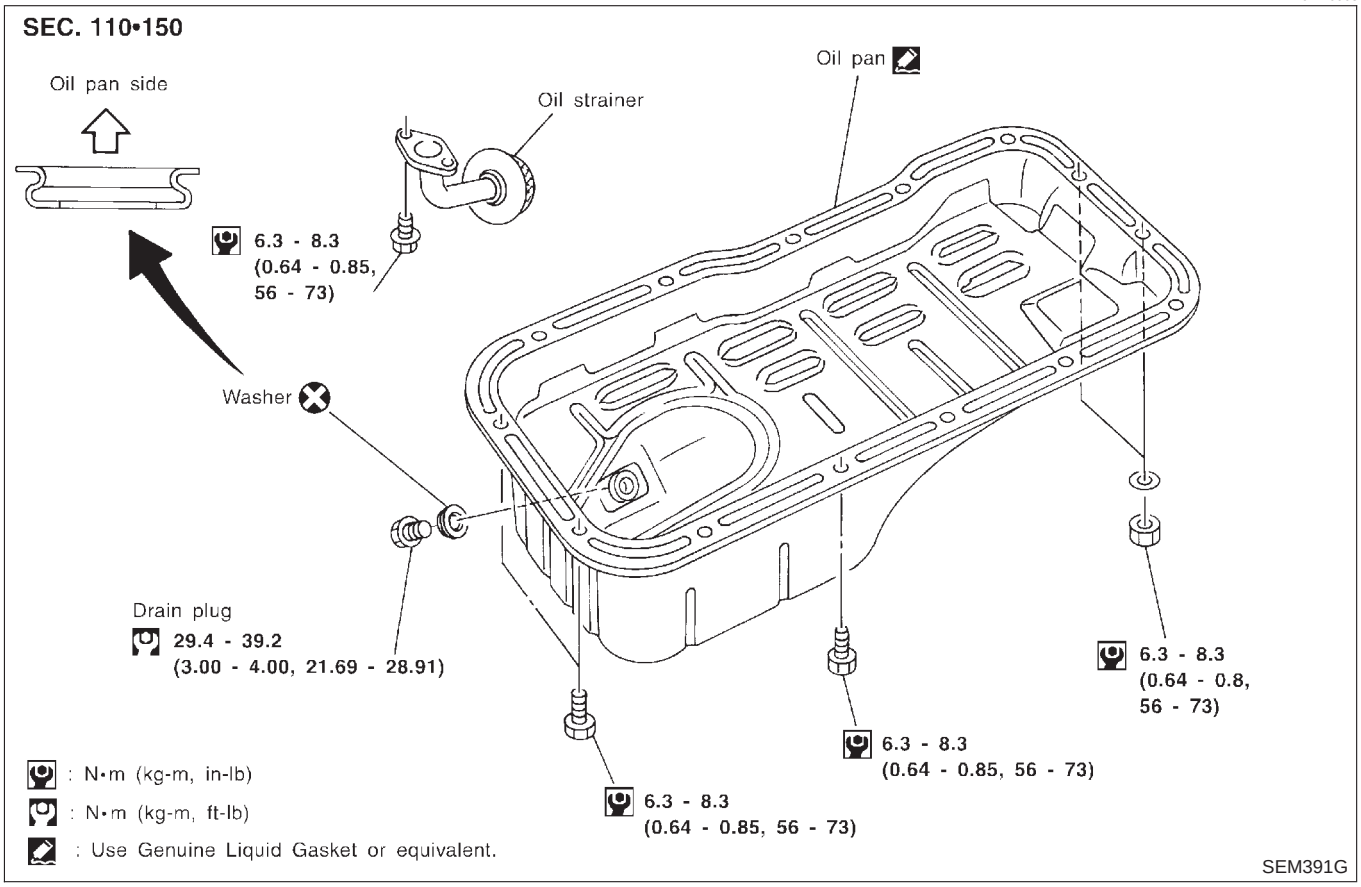

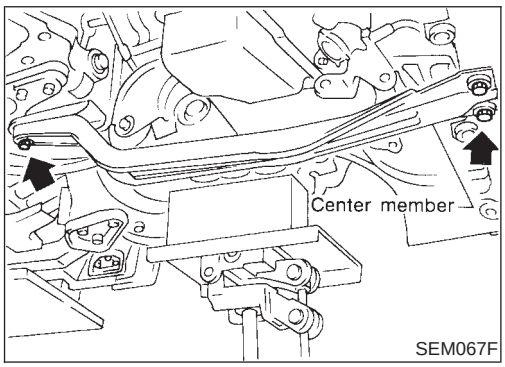

Removal

NJEM0009

1. Remove front RH side cover.
2. Drain engine oil.
3. Remove front exhaust tube.
   Refer to FE-15, “EXHAUST SYSTEM”.
4. Set a suitable transmission jack under transaxle and lift engine with engine slinger.
5. Remove center member.

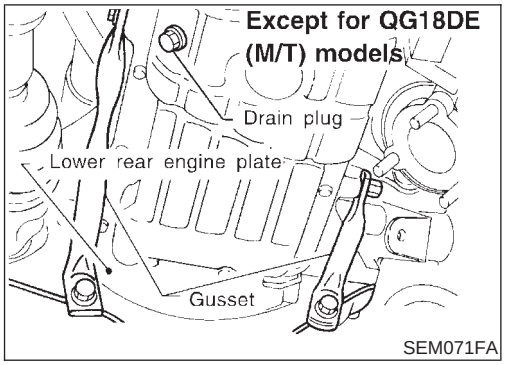

6. Remove engine gussets.
   Refer to MT-24 or AT-355, "Installation".
7. Remove rear plate cover (A/T models).

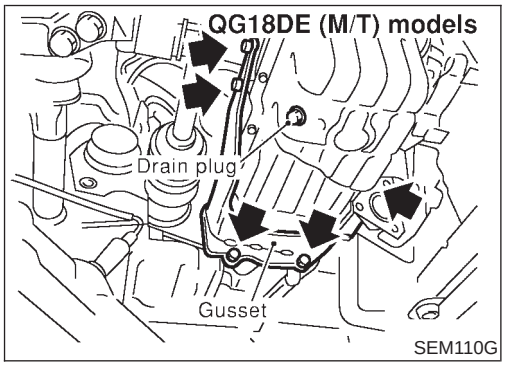

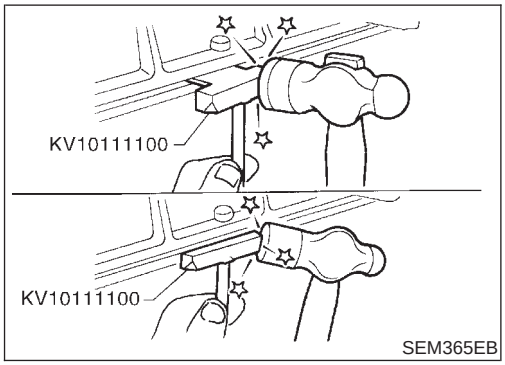

8. Remove oil pan.

a. Insert Tool between cylinder block and oil pan.

1) **Be careful not to damage aluminum mating face.**
   Do not insert screwdriver, or oil pan flange will be damaged.

b. Slide Tool by tapping on the side of the Tool with a hammer.

Installation

NJEM0010

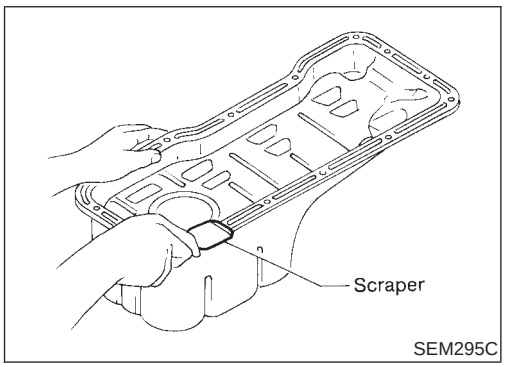

1. Use a scraper to remove old liquid gasket from mating surface of oil pan.

- **Also remove old liquid gasket from mating surface of cylinder block.**

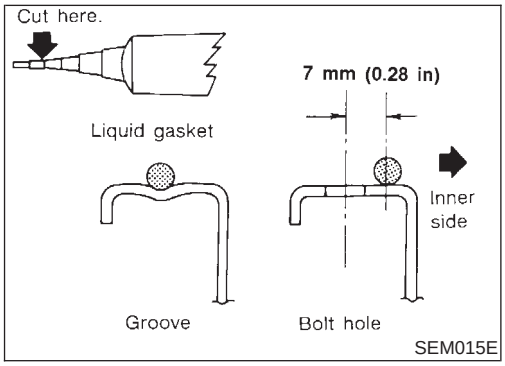

2. Apply a continuous bead of liquid gasket to mating surface of oil pan.

- **Use Genuine Liquid Gasket or equivalent.**
- **Apply to groove on mating surface.**
- **Allow 7 mm (0.28 in) clearance around bolt holes.**

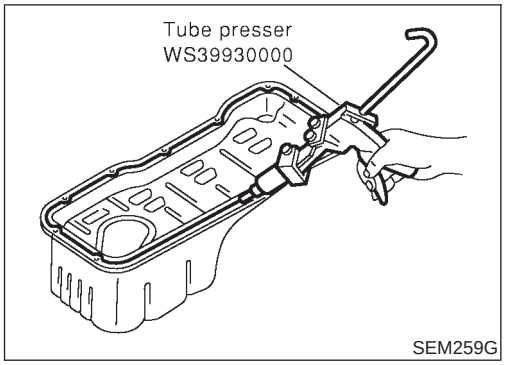

SEM259G

- **Be sure liquid gasket diameter is 3.5 to 4.5 mm (0.138 to 0.177 in).**
- **Attaching should be done within 5 minutes after coating.**

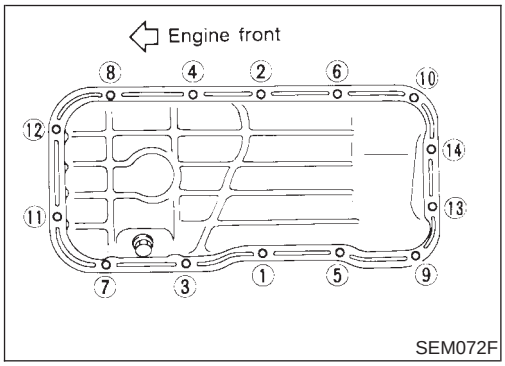

SEM072F

3. Install oil pan.
- **Tighten oil pan nuts and bolts in the numerical order.**
- **Wait at least 30 minutes before refilling engine oil.**
4. Install parts in reverse order of removal.

Components

NJEM0011

SEC. 120•130•135
With intake valve timing control

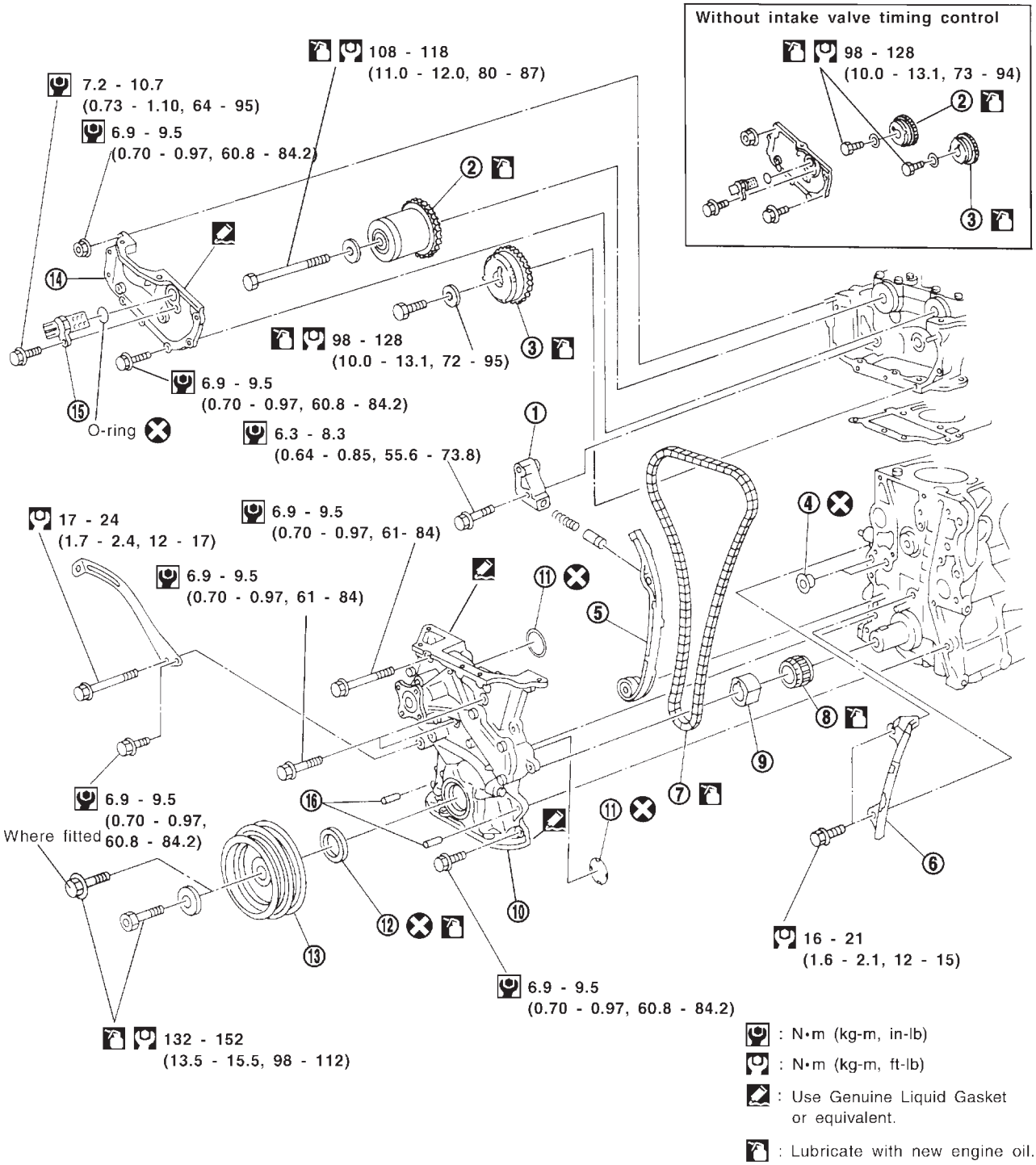

YEM012

1. Chain tensioner
2. Camshaft sprocket (Intake)
3. Camshaft sprocket (Exhaust)
4. O-ring
5. Slack side timing chain guide
6. Timing chain tension guide
7. Timing chain
8. Crankshaft sprocket
9. Oil pump drive spacer
10. Front cover
11. O-ring
12. Oil seal
13. Crankshaft pulley
14. Cylinder head front cover
15. Camshaft position sensor (PHASE)
16. Cylinder block dowels

CAUTION:

- **After removing timing chain, do not turn crankshaft and camshaft separately, or valves will strike piston heads.**
- **When installing chain tensioner, oil seats, or other sliding parts, lubricate contacting surfaces with new engine oil.**
- **Apply new engine oil to bolt threads and seat surfaces when installing camshaft sprocket and crankshaft pulley.**
- **When removing oil pump assembly, remove camshaft position sensor (PHASE), then remove timing chain from engine.**
- **Be careful not to damage sensor edges.**

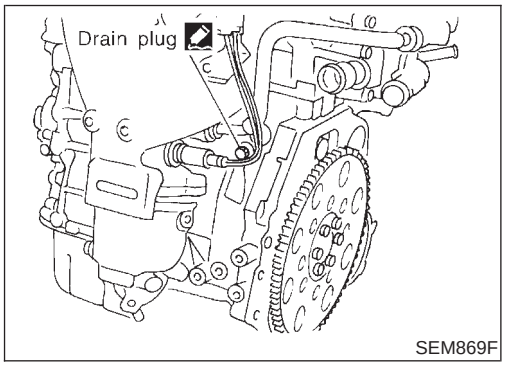

SEM869F

Removal

NJEM0105

1. Drain engine coolant from radiator and cylinder block.
   Be careful not to spill coolant on drive belts.
2. Remove reservoir tank.
3. Release fuel pressure.
   Refer to EC-40, "Fuel Pressure Release".
4. Remove the following belts.
   - Power steering pump drive belt
   - Alternator drive belt
5. Remove front right-side wheel.
6. Remove front/right splash undercover.
7. Remove front exhaust tube.

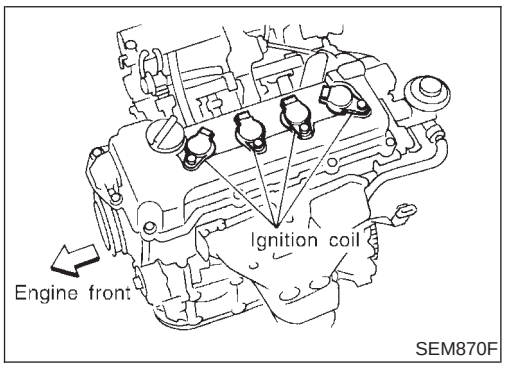

SEM870F

8. Remove vacuum hoses, fuel hoses, and so on.
9. Remove ignition coils.
10. Remove spark plugs.

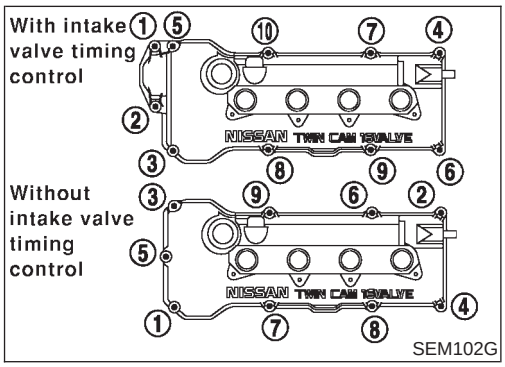

SEM102G

11. Remove rocker cover bolts in numerical order as shown in the figure.

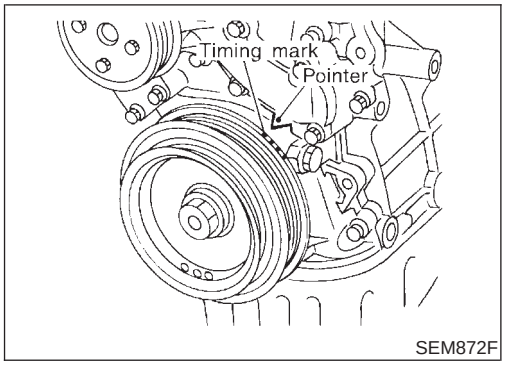

SEM872F

12. Set No. 1 piston at TDC on its compression stroke.

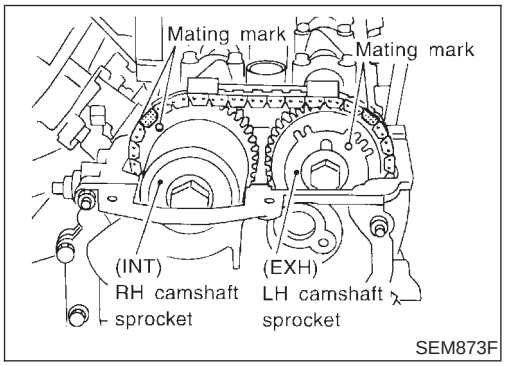

SEM873F

- **Rotate crankshaft until mating mark on camshaft sprocket is set at position indicated in figure at left.**

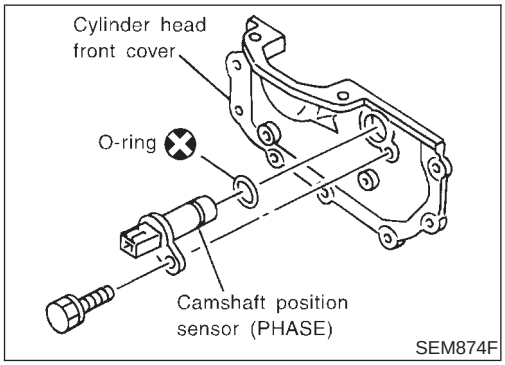

SEM874F

13. Remove camshaft position sensor (PHASE).
- **Do not allow any magnetic materials to contact the camshaft position sensor (PHASE).**
- **Be careful not to damage sensor.**
14. Remove cylinder head front cover.

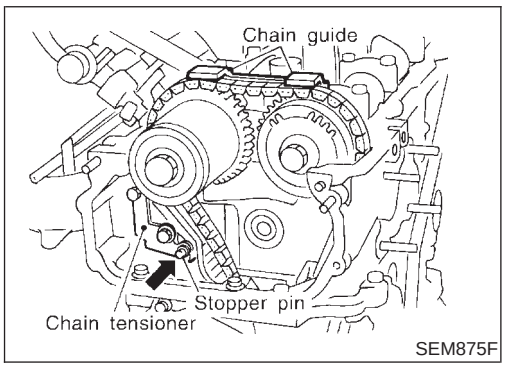

SEM875F

15. Remove timing chain guide from camshaft bracket.
16. Attach a suitable stopper pin to chain tensioner.
17. Remove chain tensioner.

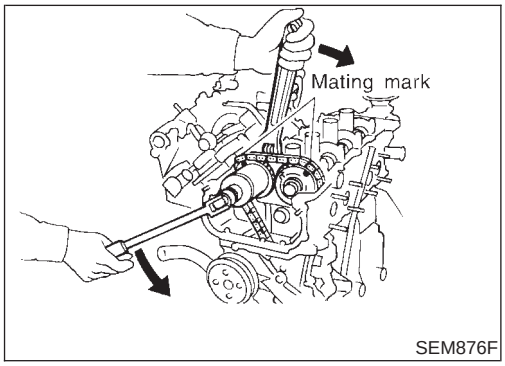

SEM876F

18. Remove camshaft sprocket bolts.
- **Apply paint to timing chain and cam sprockets for alignment during installation.**
19. Remove camshaft sprockets.

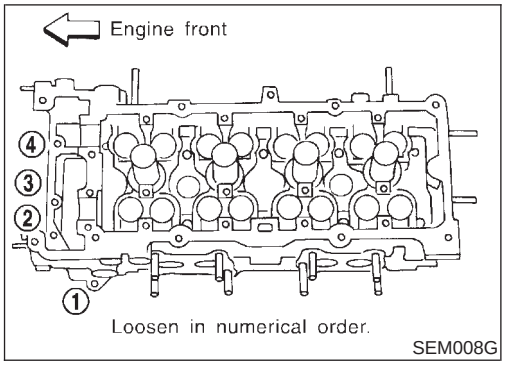

20. Remove cylinder head bolts at engine front side.

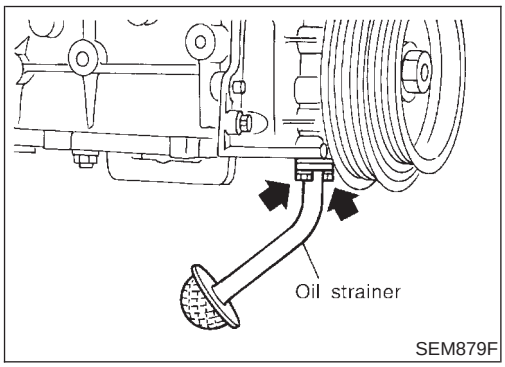

21. Remove oil pan. Refer to EM-20, "Removal".
22. Remove oil strainer.

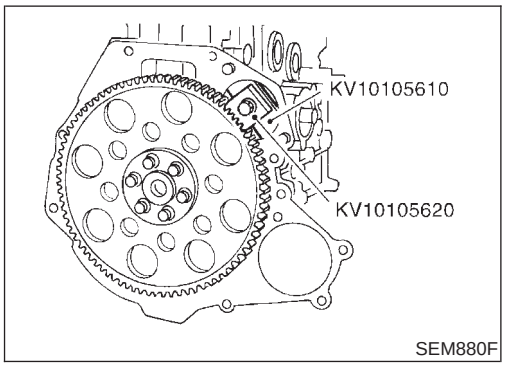

23. Remove starter motor, and set ring gear stopper using mounting bolt holes.

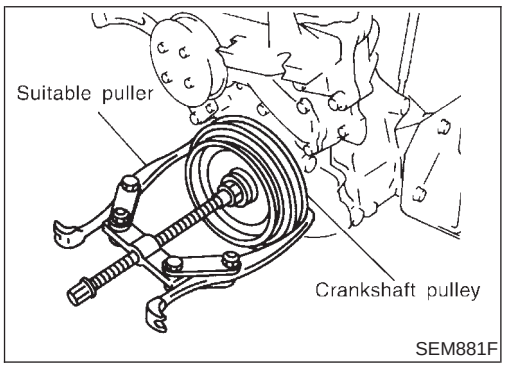

24. Loosen crankshaft pulley bolt.
25. Remove crankshaft pulley with a suitable puller.

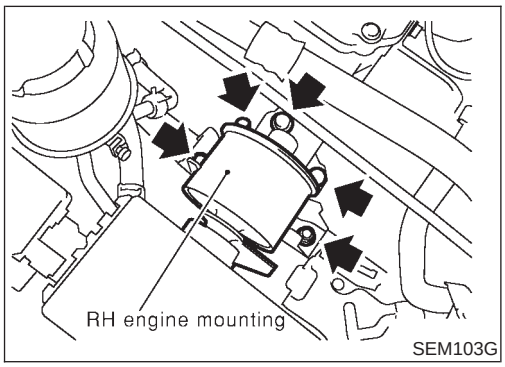

26. Remove RH engine mounting.

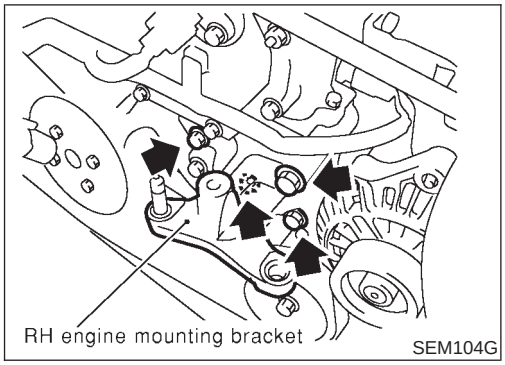

27. Remove RH engine mounting bracket.
28. Remove idler pulley and bracket.

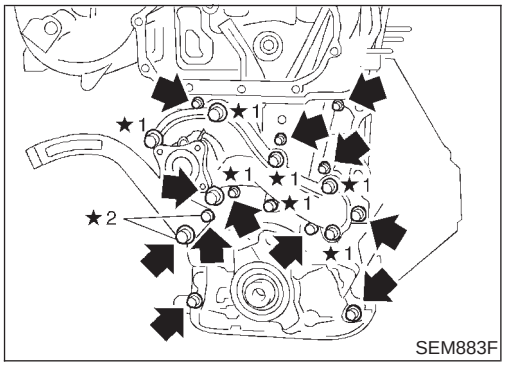

29. Remove water pump pulley and water pump.
30. Remove front cover bolts and front cover as shown.
    ★1: Located on water pump
    ★2: Located on power steering pump adjusting bar

- Inspect for oil leakage at front oil seal. Replace seal if oil leak is present.

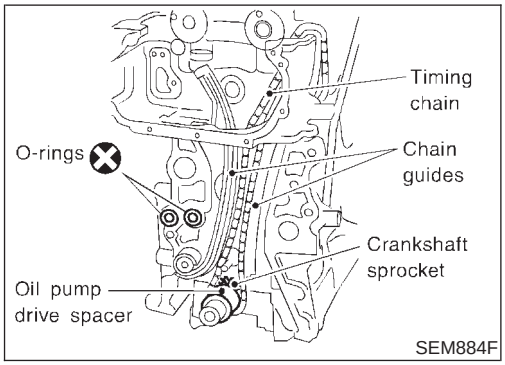

31. Remove timing chain.
32. Remove oil pump drive spacer.
33. Remove chain guides.
34. Remove crankshaft sprocket.
35. Remove O-rings from cylinder block and front cover.

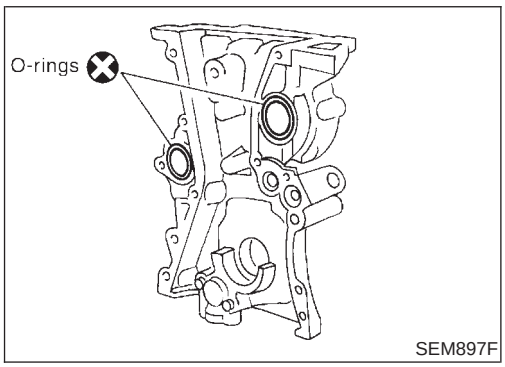

Inspection

NJEM0106

Check for cracks and excessive wear at roller links. Replace if necessary.

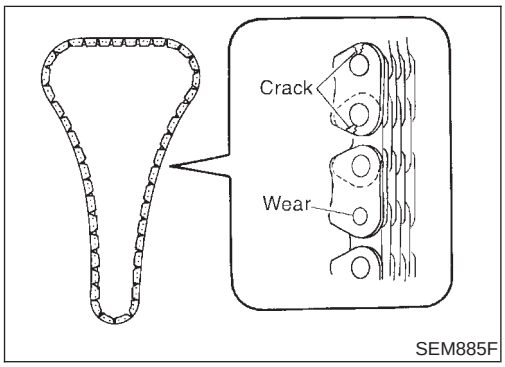

Installation

NJEM0107

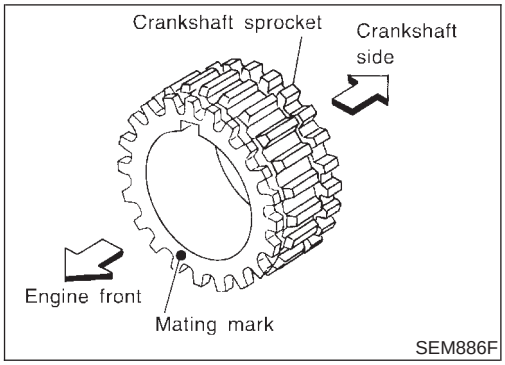

1. Install crankshaft sprocket on crankshaft.

- **Make sure mating marks on crankshaft sprocket face front of engine.**

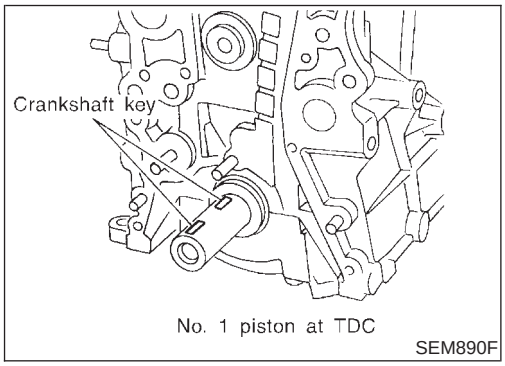

2. Position crankshaft so that No. 1 piston is at TDC and key way is at 12 o'clock.

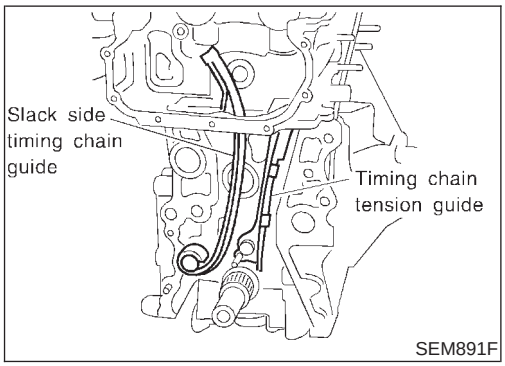

3. Install slack side timing chain guide and timing chain tension guide.

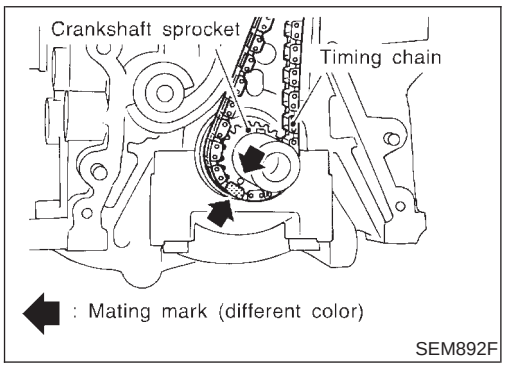

4. Install timing chain on crankshaft sprocket.

- **Support chain with a suitable tool to keep the mating mark aligned.**
- **Set timing chain by aligning its mating mark with that on the crankshaft sprocket.**
- **Make sure sprocket's mating mark faces engine front.**

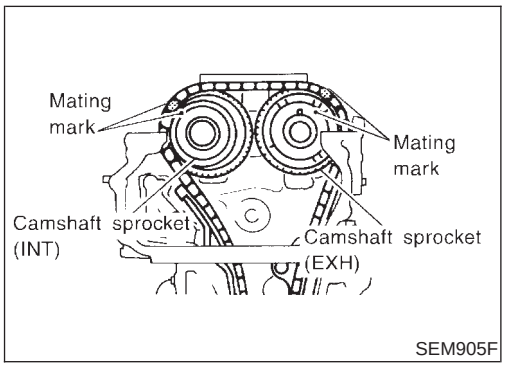

5. Install camshaft sprocket.

- **Set timing chain by aligning mating marks with those of camshaft sprockets.**

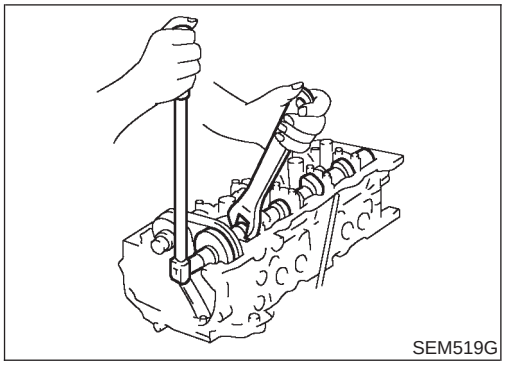
SEM519G

6. Install camshaft sprocket bolts and tighten them to correct torque.
- **Apply new engine oil to bolt threads and seat surface.**

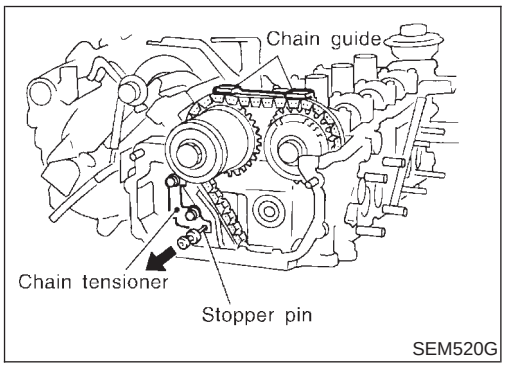

SEM520G

7. Install chain tensioner.
- **Before installing chain tensioner, insert a suitable pin into pin hole of chain tensioner.**
- **After installing chain tensioner, remove the pin.**
8. Install timing chain guide.

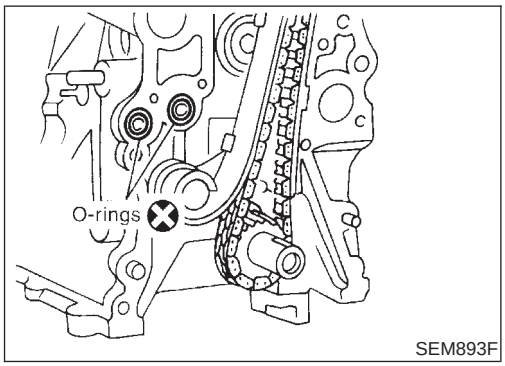

SEM893F

9. Install O-rings to cylinder block.

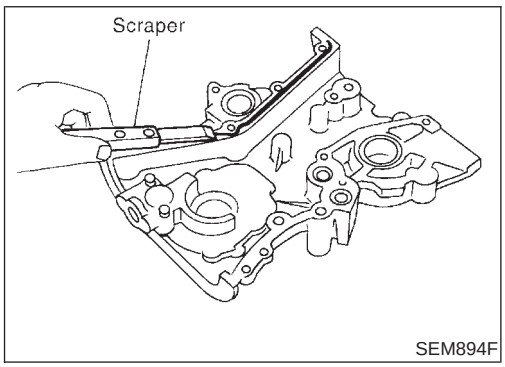

SEM894F

10. Before installing front cover, remove all traces of liquid gasket from mating surface using a scraper.
- Also remove traces of liquid gasket from mating surface of cylinder block.

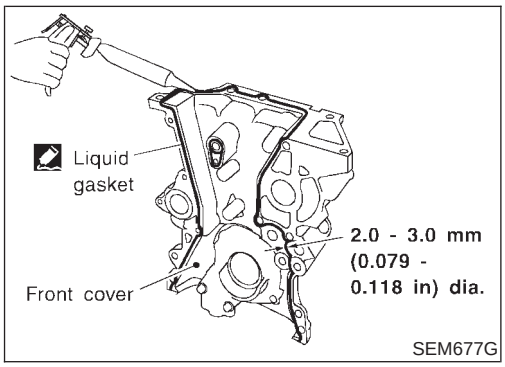

SEM677G

11. Apply a continuous bead of liquid gasket to mating surface of front cover.
- **Check alignment of mating marks on chain and crankshaft sprocket.**
- **Align oil drive spacer with oil pump.**
- **Place timing chain to the side of chain guide. This prevents the chain from making contact with water seal area of front cover.**

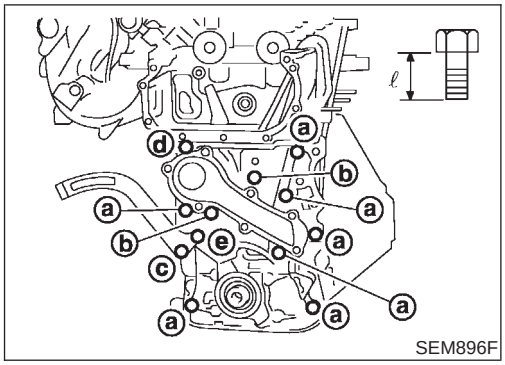

SEM896F

12. Install front cover.

Bolt No.	Tightening torque N·m (kg-m, in-lb)	"ℓ" mm (in)
a.	6.9 - 9.5 (0.70 - 0.97, 61 - 84)	20 (0.79)
b.	6.9 - 9.5 (0.70 - 0.97, 61 - 84)	40 (1.57)
c.	17 - 24 (1.7 - 2.4, 148 - 208*)	70 (2.76)
d.	6.9 - 9.5 (0.70 - 0.97, 61 - 84)	72.8 (2.866)
e.	6.9 - 9.5 (0.70 - 0.97, 61 - 84)	12 (0.47)

*: 12 - 17 ft-lb

- **Make sure two O-rings are present.**
- **Be careful not to damage oil seal when installing front cover.**

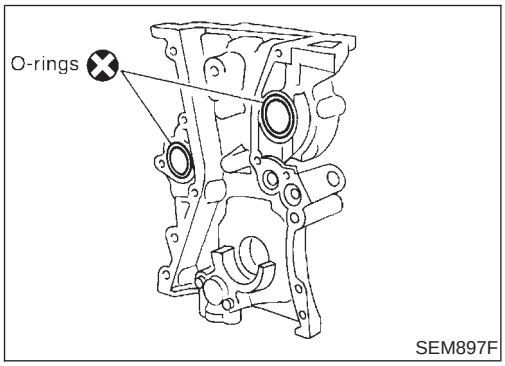

SEM897F

13. Install cylinder head bolts at engine front side.

- **Tightening procedure**
  Tightening bolts (1 - 4) to 6.3 to 8.3 N·m (0.64 to 0.85 kg-m, 55.8 to 73.5 in-lb).

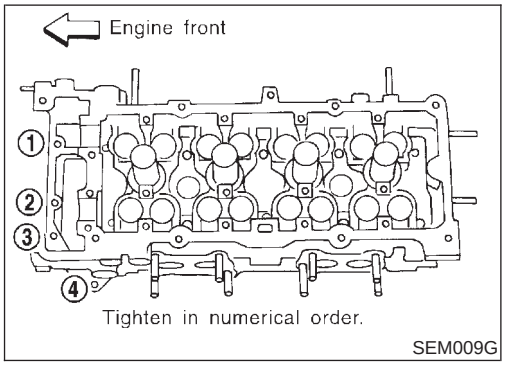

SEM009G

14. Install oil pump drive spacer.

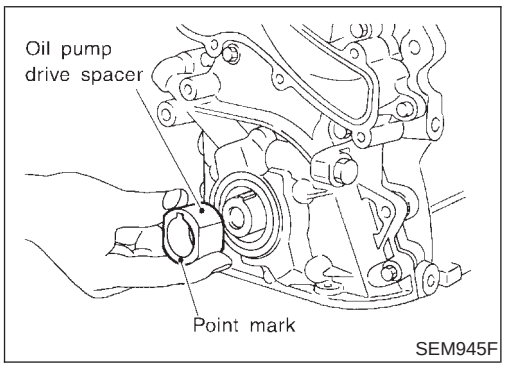

SEM945F

15. Install water pump and water pump pulley.
    Refer to LC-14, "Water Pump".
16. Install idler pulley and bracket.
17. Install RH engine mounting bracket.
18. Install RH engine mounting.
19. Install oil strainer.
20. Install oil pan. Refer to EM-21, "Installation".
21. Install crankshaft pulley.
22. Remove ring gear stopper.
23. Install starter motor.

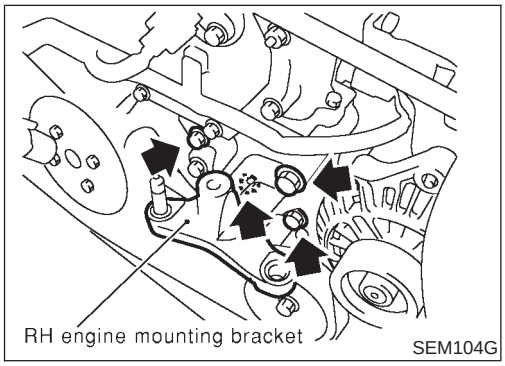

SEM104G

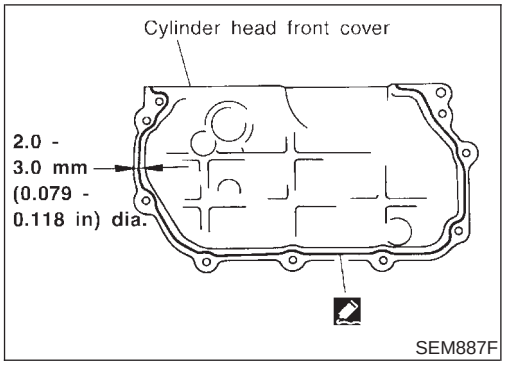

24. Install cylinder head front cover.
- Apply liquid gasket to cylinder head front cover.
- Use Genuine Liquid Gasket or equivalent.

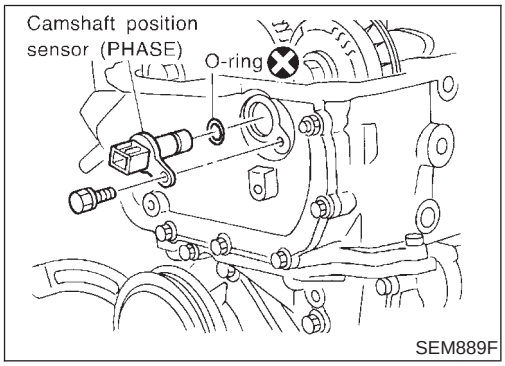

25. Install camshaft position sensor (PHASE).

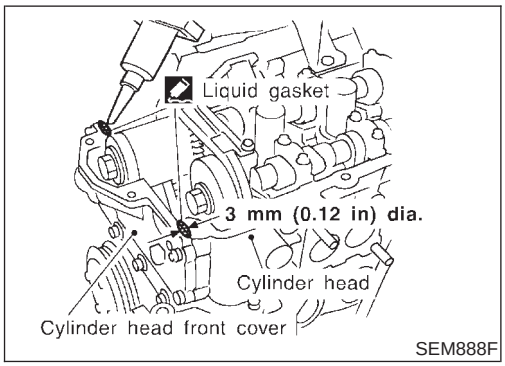

26. Before installing rocker cover, apply a continuous bead of liquid gasket to mating surface of cylinder head.

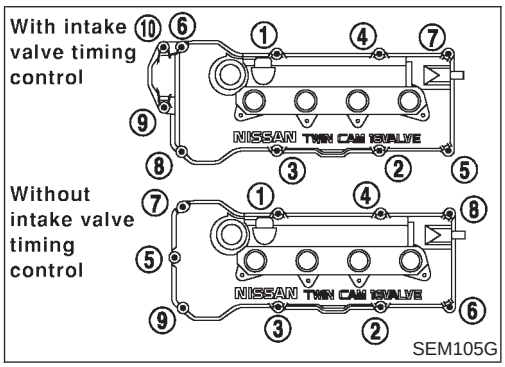

27. Install rocker cover with rocker cover gasket and tighten bolts in numerical order as shown in the figure.
28. Install spark plugs.
29. Install ignition coils.
30. Install front exhaust tube.
31. Install front/right splash undercover.
32. Install front right-side wheel.
33. Drive belts.
    For adjusting drive belt deflection, refer to EM-16, “Checking”.
34. Reinstall parts in reverse order of removal.

Replacement

NJEM0015

VALVE OIL SEAL

NJEM0015S01

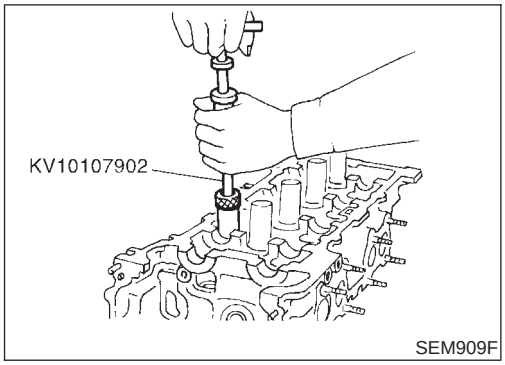

SEM909F

1. Remove rocker cover.
2. Remove camshaft.
3. Remove valve spring. Refer to EM-37.
4. Remove valve oil seal with Tool.

Piston concerned should be set at TDC to prevent valve from falling.

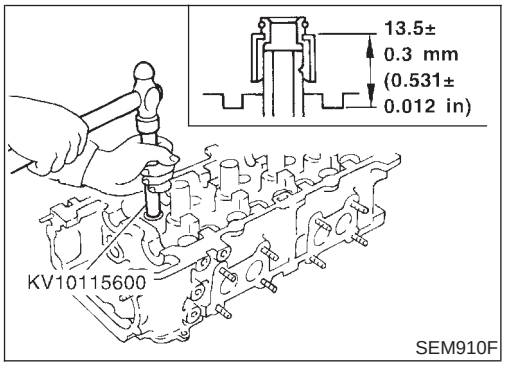

SEM910F

5. Apply new engine oil to new valve oil seal and install it with Tool.

FRONT OIL SEAL

NJEM0015S02

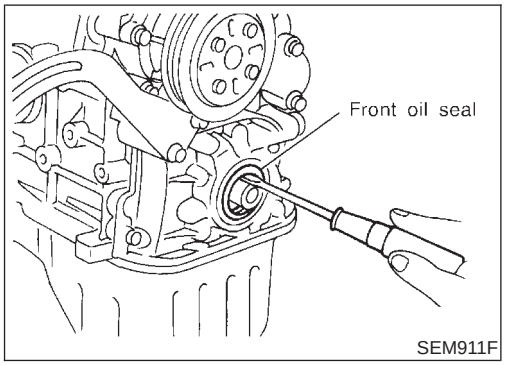

SEM911F

1. Remove the following parts:
- Engine under cover
- RH engine side cover
- Alternator and power steering drive belts
- Crankshaft pulley
2. Remove front oil seal from front cover.
- **Be careful not to scratch front cover.**

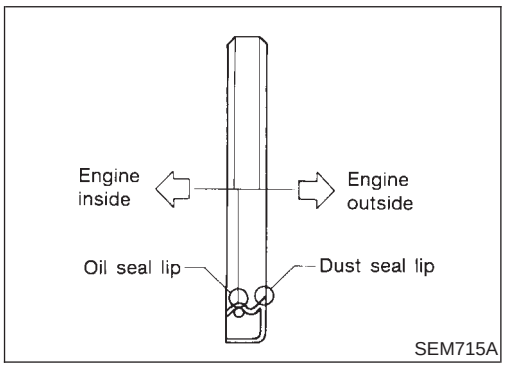

SEM715A

3. Apply new engine oil to new oil seal and install it using a suitable tool.
- Install new oil seal in the direction shown.

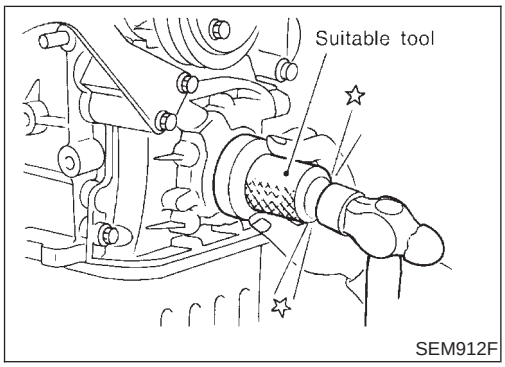

SEM912F

REAR OIL SEAL

=NJEM0015S03

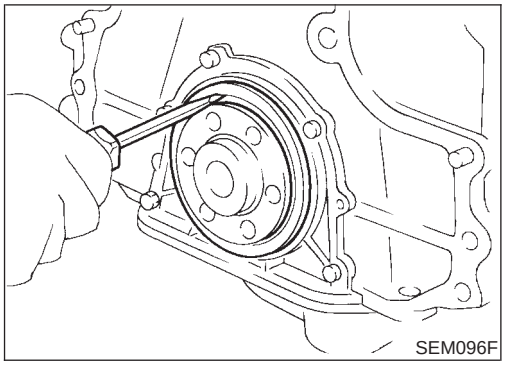

1. Remove transaxle. Refer to MT-23 or AT-354, "REMOVAL AND INSTALLATION".
2. Remove flywheel or drive plate.
3. Remove rear oil seal.

- **Be careful not to scratch rear oil seal retainer.**

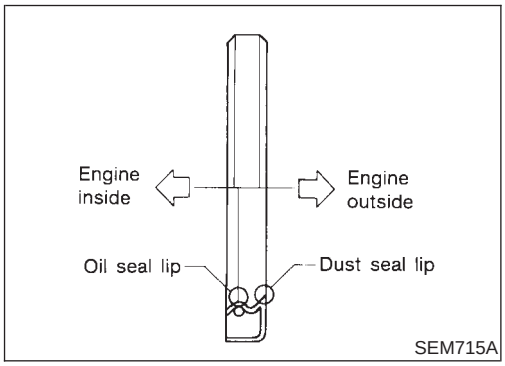

4. Apply new engine oil to new oil seal and install it using a suitable tool.

- Install new oil seal in the direction shown.

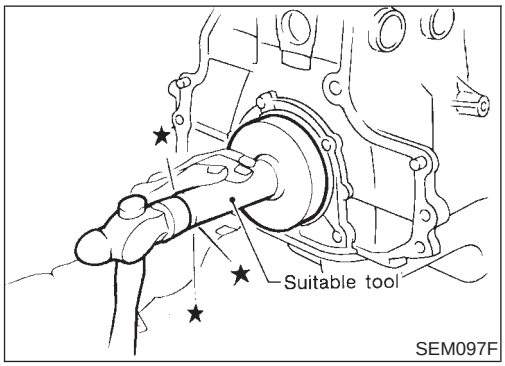

Components

NJEM0108

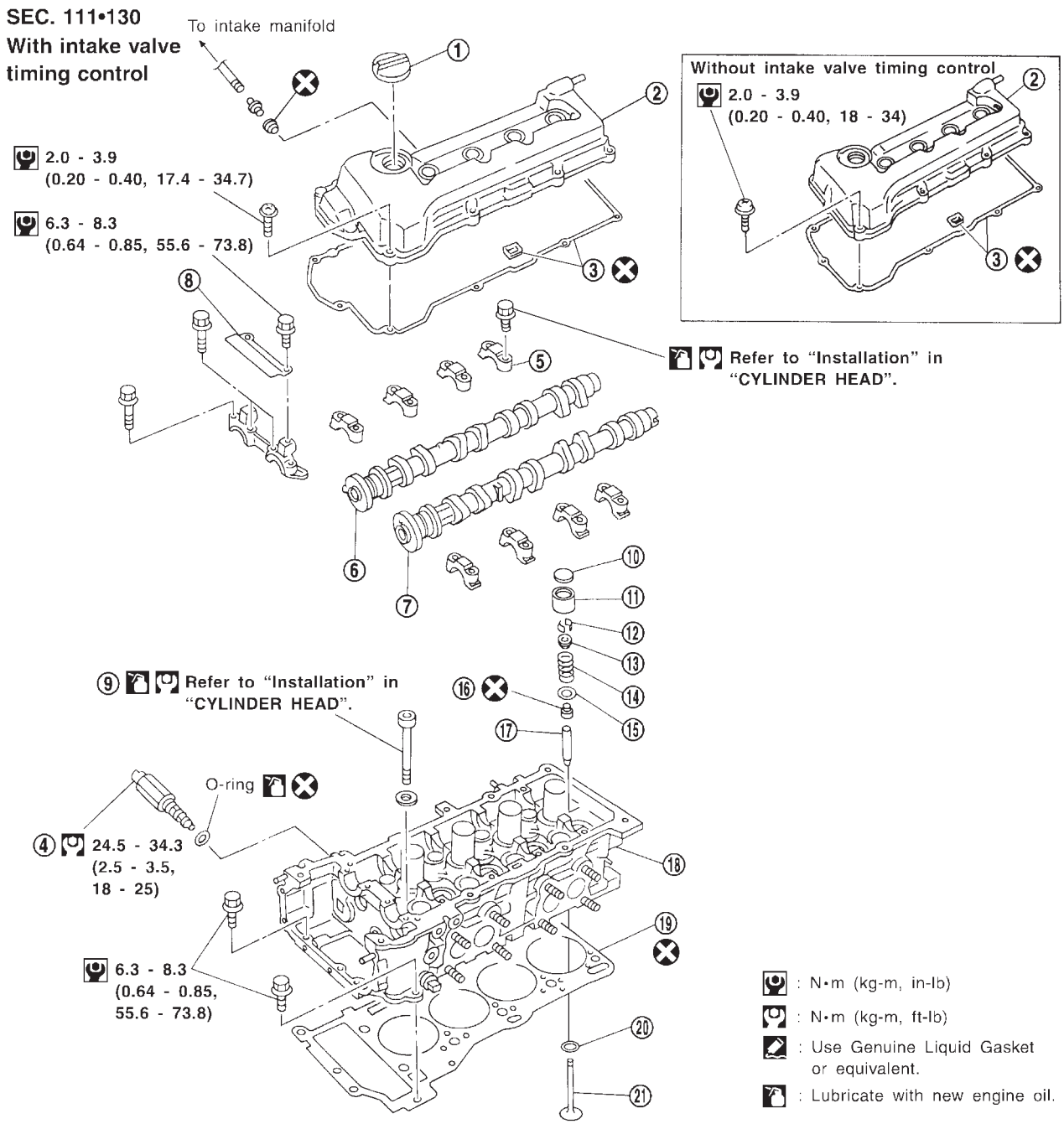

SEM106G

1. Oil filler cap
2. Rocker cover
3. Rocker cover gasket
4. Intake valve timing control solenoid (Models with intake valve timing control)
5. Camshaft bracket
6. Intake camshaft
7. Exhaust camshaft
8. Timing chain guide
9. Cylinder head bolt
10. Shim
11. Valve lifter
12. Valve cotter
13. Valve spring retainer
14. Valve spring
15. Valve spring seat
16. Valve oil seal
17. Valve guide
18. Cylinder head
19. Cylinder head gasket
20. Valve seat
21. Valve

CAUTION:

- **When installing camshaft and oil seal, lubricate contacting surfaces with new engine oil.**
- **When tightening cylinder head bolts, camshaft sprocket bolts and camshaft bracket bolts, lubricate bolt threads and seat surfaces with new engine oil.**
- **Attach tags to valve lifters so as not to mix them up.**

Removal

NJEM0017

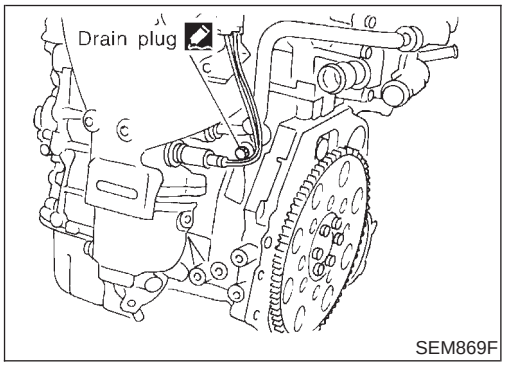

SEM869F

1. Drain engine coolant from radiator and cylinder block.
   Be careful not to spill coolant on drive belts.
2. Release fuel pressure.
   Refer to EC-40, "Fuel Pressure Release".
3. Remove drive belts.
4. Remove air duct to intake manifold collector.
5. Remove front undercovers.
6. Remove front exhaust tube.

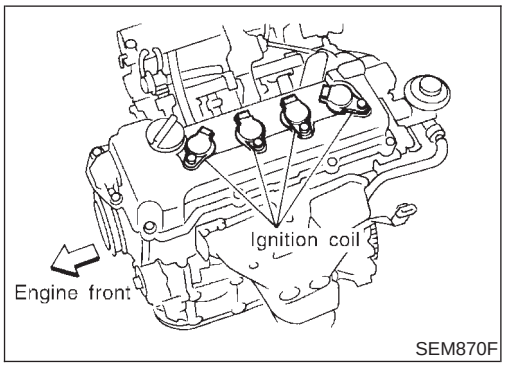

SEM870F

7. Disconnect vacuum hoses, fuel hoses, water hoses, wires, harness, connectors and so on.
8. Remove intake manifold rear supports.
9. Remove exhaust manifold.
10. Remove ignition coils.
11. Remove spark plugs.

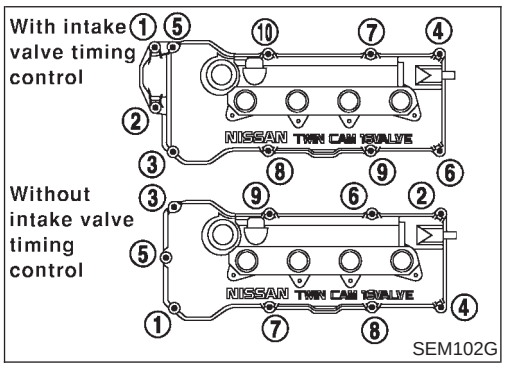

SEM102G

12. Remove rocker cover bolts in numerical order as shown in the figure.

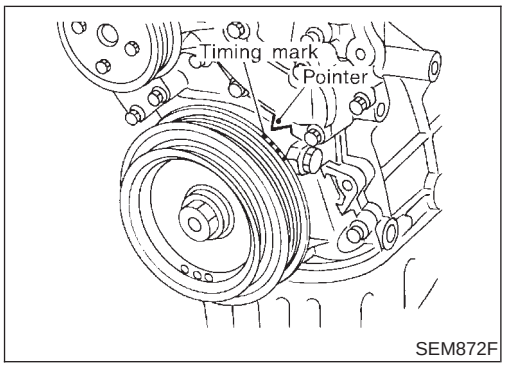

SEM872F

13. Set No. 1 piston at TDC on its compression stroke.

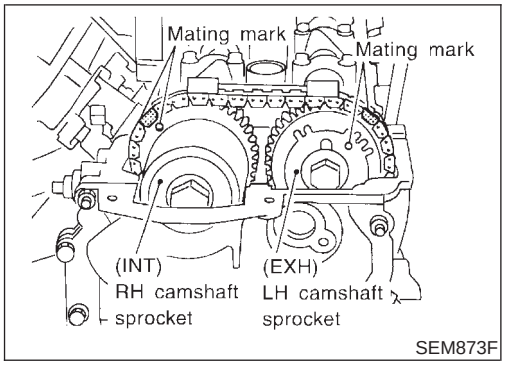

- **Rotate crankshaft until mating mark on camshaft sprocket is set at position indicated in figure at left.**

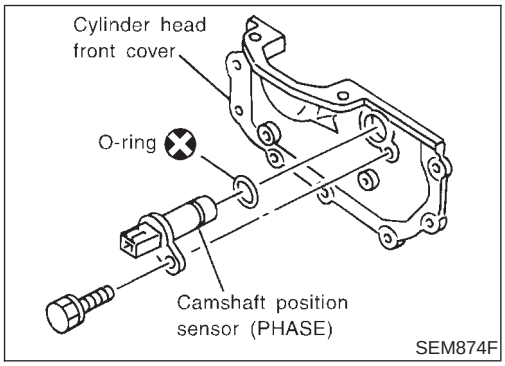

14. Remove camshaft position sensor (PHASE).
- **Do not allow any magnetic materials to contact the camshaft position sensor (PHASE).**
- **Be careful not to damage sensor.**
15. Remove cylinder head front cover.

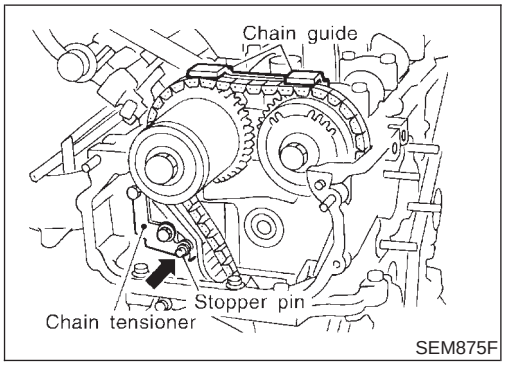

16. Remove timing chain guide from camshaft bracket.
17. Attach a suitable stopper pin to chain tensioner.
18. Remove chain tensioner.

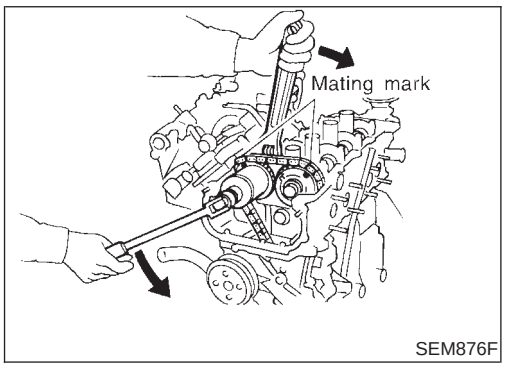

19. Remove camshaft sprocket bolts.
- **Apply paint to timing chain and cam sprockets for alignment during installation.**
20. Remove camshaft sprockets.

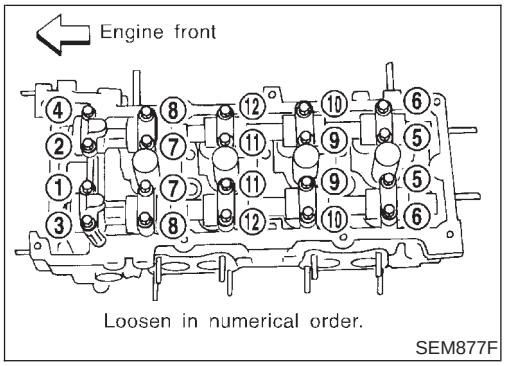

21. Remove camshaft brackets and camshafts.
- **Apply I.D. marks to brackets to ensure correct reassembly.**
- **Bolts should be loosened in two or three steps.**

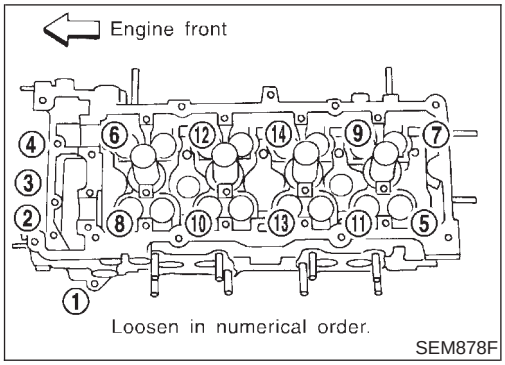

22. Remove cylinder head bolts.
23. Remove cylinder head with manifolds.

- **Head warpage or cracking could result from removing in incorrect order.**
- **Cylinder head bolts should be loosened in two or three steps.**

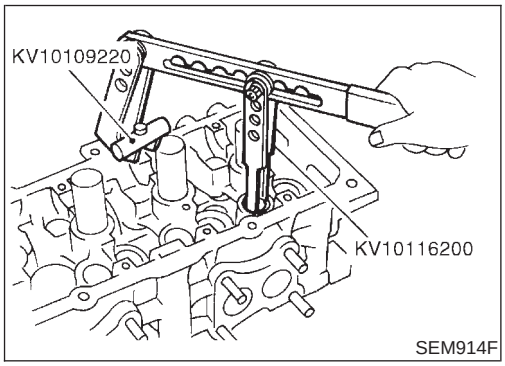

Disassembly

NJEM0018

1. Remove valve components with Tool.
2. Remove valve oil seal with a suitable tool.

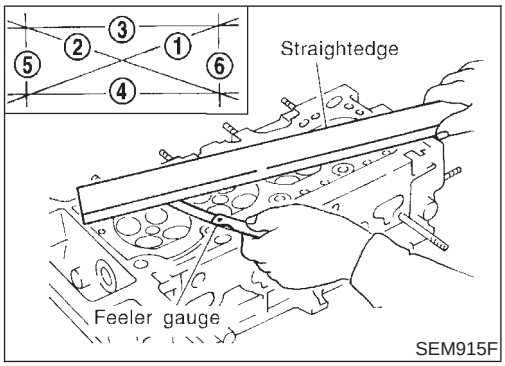

Inspection

NJEM0019

CYLINDER HEAD DISTORTION

NJEM0019S01

- Clean surface of cylinder head.
- Use a reliable straightedge and feeler gauge to check the flatness of cylinder head mating surface.
- Check along six positions shown in figure.

Head surface flatness:

Standard: Less than 0.03 mm (0.0012 in)

Limit: 0.1 mm (0.004 in)

If beyond the specified limit, replace or resurface it.

Resurfacing limit:

The limit for cylinder head resurfacing is determined by the amount of cylinder block resurfacing.

Amount of cylinder head resurfacing is "A".

Amount of cylinder block resurfacing is "B".

The maximum limit is as follows:

A + B = 0.2 mm (0.008 in)

After resurfacing cylinder head, check that camshaft rotates freely by hand. If resistance is felt, replace cylinder head.

Nominal cylinder head height:

117.8 - 118.0 mm (4.638 - 4.646 in)

CAMSHAFT VISUAL CHECK

NJEM0019S02

Check camshaft for scratches, seizure and wear.

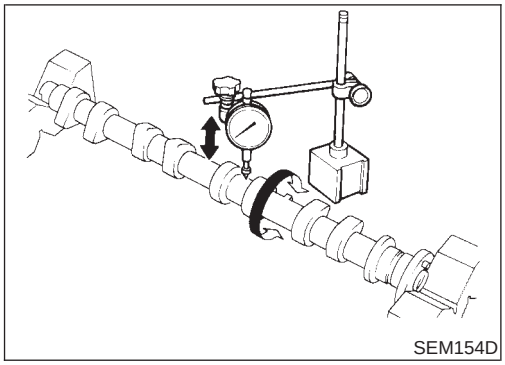
SEM154D

CAMSHAFT RUNOUT

NJEM0019S03

1. Measure camshaft runout at the center journal.
   Runout (Total indicator reading):
   Standard
   Less than 0.02 mm (0.0008 in)
   Limit
   0.1 mm (0.004 in)
2. If it exceeds the limit, replace camshaft.

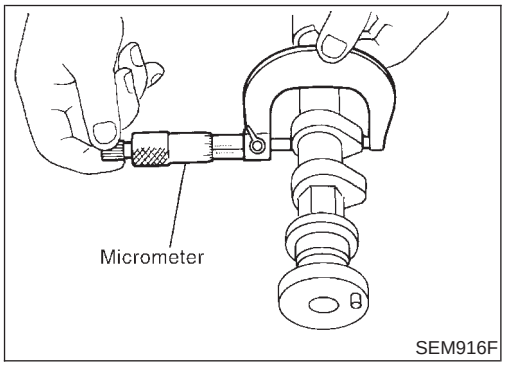

SEM916F

CAMSHAFT CAM HEIGHT

NJEM0019S04

1. Measure camshaft cam height.
   Standard cam height:
   Intake
   QG18DE with intake valve timing control
   40.610 - 40.800 mm (1.5988 - 1.6063 in)
   Except for QG18DE with intake valve timing control
   39.880 - 40.070 mm (1.5701 - 1.5776 in)
   Exhaust
   40.056 - 40.246 mm (1.5770 - 1.5845 in)
   Cam wear limit:
   0.20 mm (0.0079 in)
2. If wear is beyond the limit, replace camshaft.

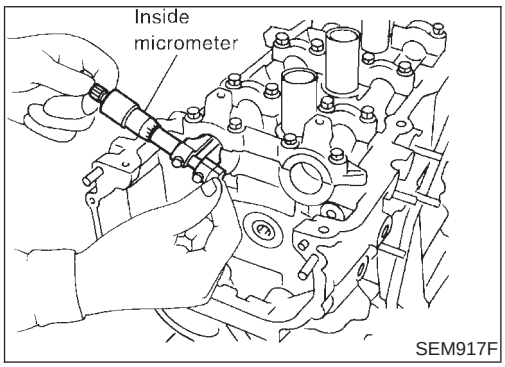

SEM917F

CAMSHAFT JOURNAL CLEARANCE

NJEM0019S05

1. Install camshaft bracket and tighten bolts to the specified torque.
2. Measure inner diameter of camshaft bearing.
   Standard inner diameter:
   No. 1 bearing
   28.000 - 28.021 mm (1.1024 - 1.1032 in)
   No. 2 to No. 5 bearings
   24.000 - 24.021 mm (0.9449 - 0.9457 in)

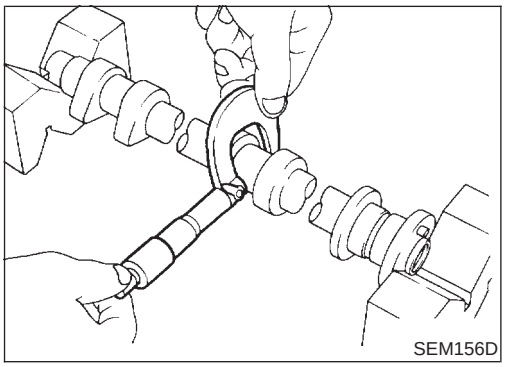
SEM156D

3. Measure outer diameter of camshaft journal.
   Standard outer diameter:
   No. 1 journal
   27.935 - 27.955 mm (1.0998 - 1.1006 in)
   No. 2 to No. 5 journals
   23.935 - 23.955 mm (0.9423 - 0.9431 in)
4. If clearance exceeds the limit, replace camshaft and/or cylinder head.
   Camshaft journal clearance:
   Standard
   0.045 - 0.086 mm (0.0018 - 0.0034 in)

Limit
0.15 mm (0.0059 in)

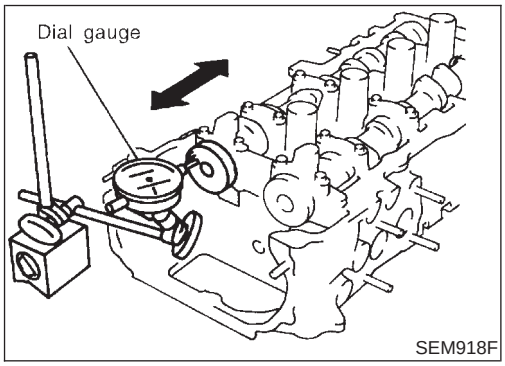

CAMSHAFT END PLAY

NJEM0019S06

1. Install camshaft in cylinder head. Refer to EM-47.
2. Measure camshaft end play.

   Camshaft end play:
   Standard
   0.115 - 0.188 mm (0.0045 - 0.0074 in)
   Limit
   0.20 mm (0.0079 in)
3. If limit is exceeded, replace camshaft and remeasure end play.

- **If limit is still exceeded after replacing camshaft, replace cylinder head.**

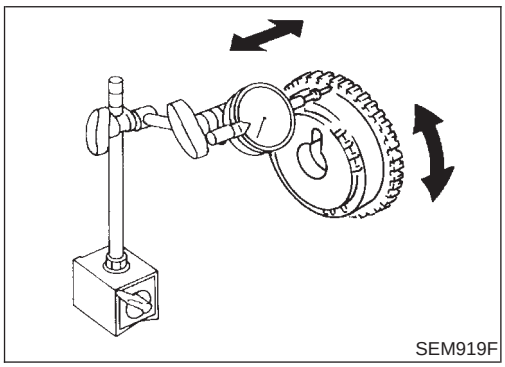

CAMSHAFT SPROCKET RUNOUT

NJEM0019S07

1. Install sprocket on camshaft.
2. Measure camshaft sprocket runout.

   Runout (Total indicator reading):
   Limit 0.15 mm (0.0059 in)
3. If it exceeds the limit, replace camshaft sprocket.

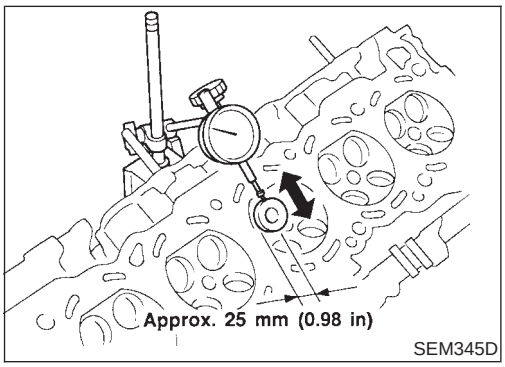

VALVE GUIDE CLEARANCE

NJEM0019S08

1. Measure valve deflection as shown in figure. (Valve and valve guide wear the most in this direction.)

   Valve deflection limit (Dial gauge reading):
   Intake & Exhaust
   0.2 mm (0.008 in)

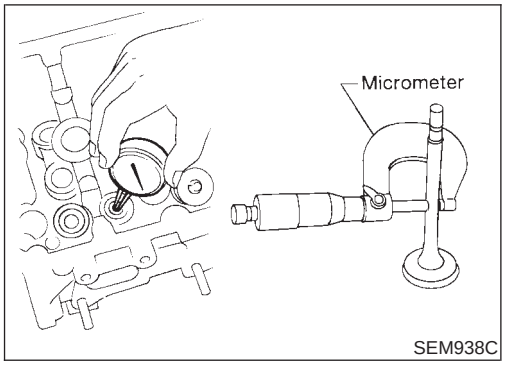

2. If it exceeds the limit, check valve to valve guide clearance.
a. Measure valve stem diameter and valve guide inner diameter.
b. Calculate valve to valve guide clearance.
Valve to valve guide clearance = valve guide inner diameter − valve stem diameter.
c. Check that clearance is within specification.

Unit: mm (in)

	Standard	Limit
Intake	0.020 - 0.050 (0.0008 - 0.0020)	0.1 (0.004)
Exhaust	0.040 - 0.070 (0.0016 - 0.0028)	0.1 (0.004)

- If it exceeds the limit, replace valve and remeasure clearance.
- **If limit is still exceeded after replacing valve, replace valve guide.**

VALVE GUIDE REPLACEMENT

NJEM0019S09

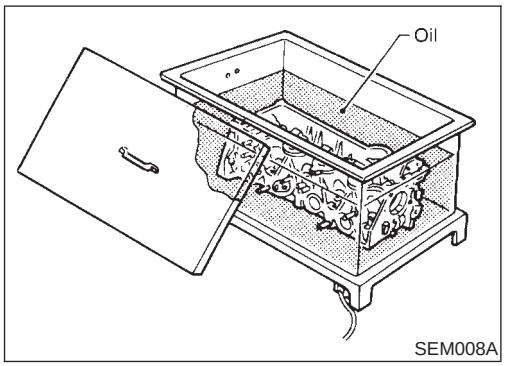

1. To remove valve guide, heat cylinder head to 110 to 130°C (230 to 266°F).

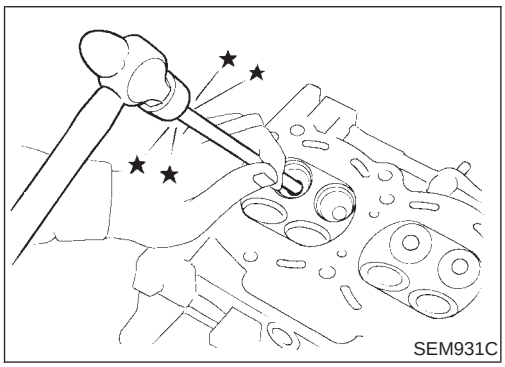

2. Drive out valve guide with a press [under a 20 kN (2 ton, 2.2 US ton, 2.0 Imp ton) pressure] or hammer and suitable tool.

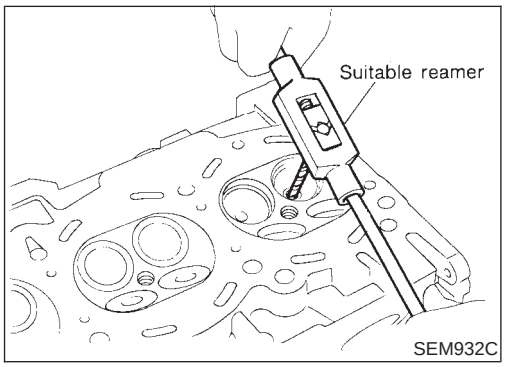

3. Ream cylinder head valve guide hole.

Valve guide hole diameter
(for service parts):
Intake & Exhaust
9.685 - 9.696 mm (0.3813 - 0.3817 in)

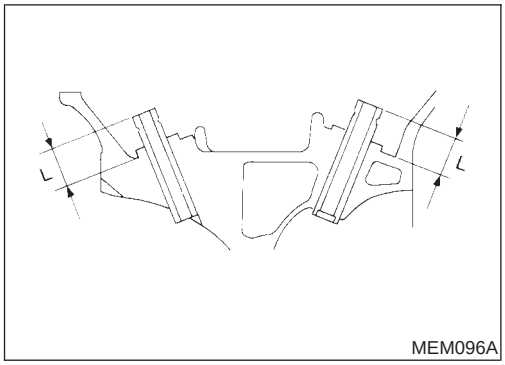

MEM096A

4. Heat cylinder head to 110 to 130°C (230 to 266°F) and press service valve guide into cylinder head.

Projection "L":

11.5 - 11.7 mm (0.453 - 0.461 in)

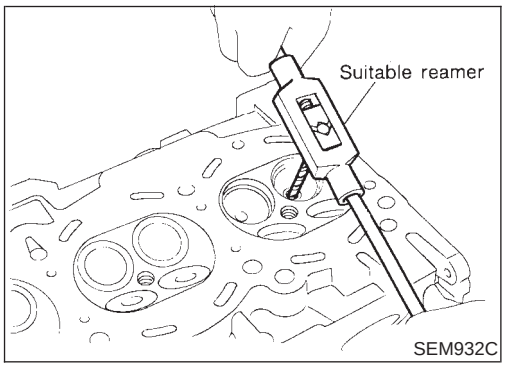

SEM932C

5. Ream valve guide.

Finished size:

Intake & Exhaust

5.500 - 5.515 mm (0.2165 - 0.2171 in)

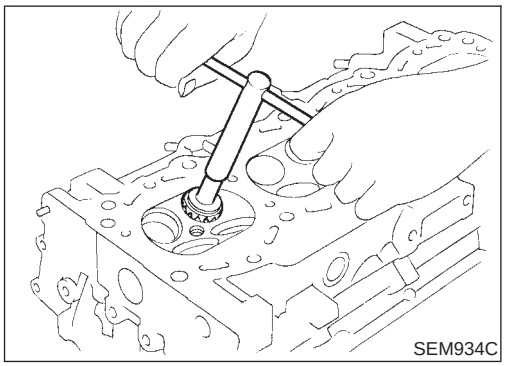
SEM934C

VALVE SEATS

NJEM0019S10

Check valve seats for pitting at contact surface. Resurface or replace if excessively worn.

- **Before repairing valve seats, check valve and valve guide for wear. If they have worn, replace them. Then correct valve seat.**
- **Use both hands to cut uniformly.**

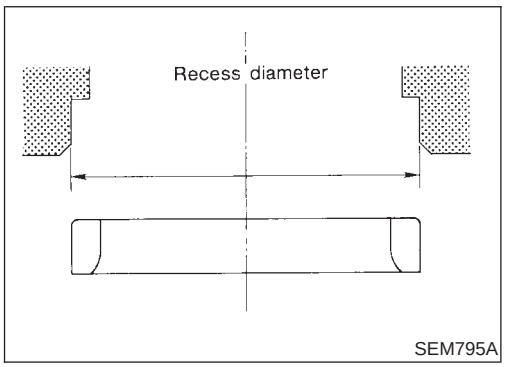

SEM795A

REPLACING VALVE SEAT FOR SERVICE PARTS

NJEM0019S11

1. Bore out old seat until it collapses. Set machine depth stop so that boring cannot contact the bottom face of seat recess in cylinder head.
2. Ream cylinder head recess.

Reaming bore for service valve seat

Oversize [0.5 mm (0.020 in)]:

Refer to SDS, EM-71.

Use the valve guide center for reaming to ensure valve seat will have the correct fit.

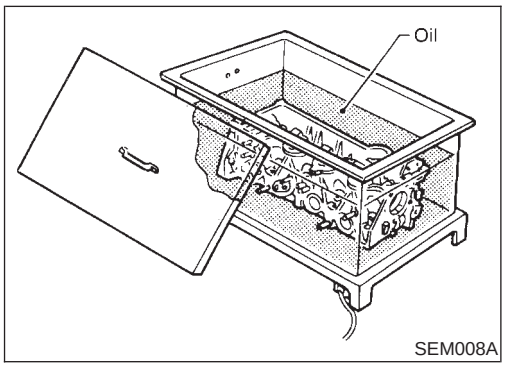

SEM008A

3. Heat cylinder head to 110 to 130°C (230 to 266°F).
4. Press fit valve seat until it seats on the bottom.

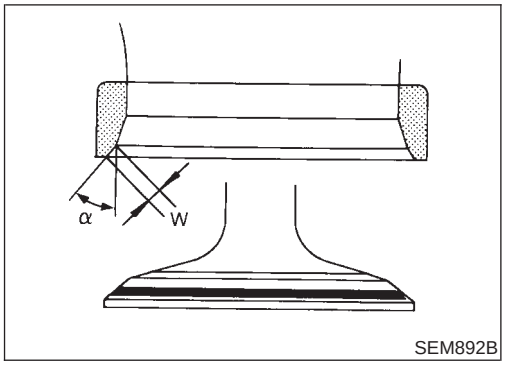

SEM892B

5. Cut or grind valve seat using suitable tool to the specified dimensions as shown in SDS, EM-71.
6. After cutting, lap valve seat with abrasive compound.
7. Check valve seating condition.

   Seat face angle "α":
   44°53′ - 45°07′
   Contacting width "W":
   Intake
   1.06 - 1.34 mm (0.0417 - 0.0528 in)
   Exhaust
   1.20 - 1.68 mm (0.0472 - 0.0661 in)

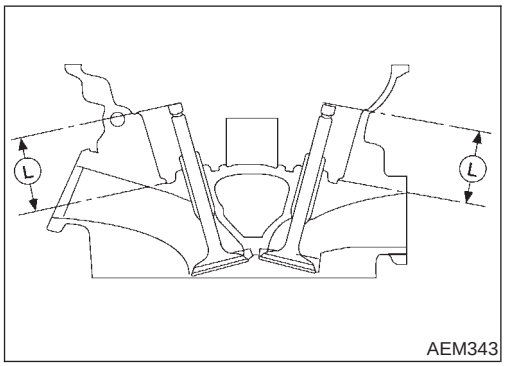

AEM343

8. Use a depth gauge to measure the distance "L" between the mounting surface of the cylinder head spring seat and the valve stem end. If the distance is shorter than specified, repeat step 5 above to correct it. If the distance is longer, replace the valve seat.

   Valve seat resurface limit:
   Intake
   35.95 - 36.55 mm (1.4154 - 1.4390 in)
   Exhaust
   35.92 - 36.52 mm (1.4142 - 1.4378 in)

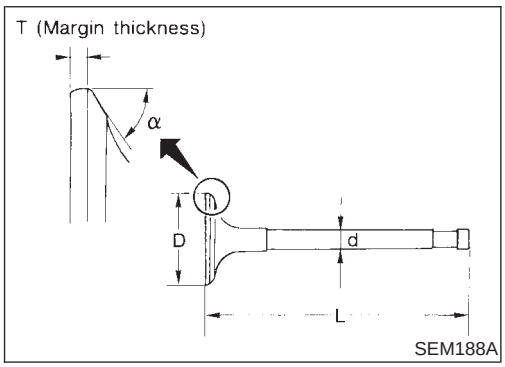

SEM188A

VALVE DIMENSIONS

NJEM0019S12

Check dimensions of each valve. Refer to SDS, EM-68 for dimensions.
When valve head has been worn down to 0.5 mm (0.020 in) in margin thickness, replace valve.
Grinding allowance for valve stem tip is 0.2 mm (0.008 in) or less.

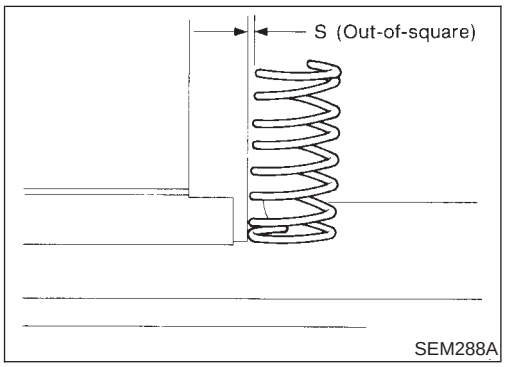

SEM288A

VALVE SPRING

NJEM0019S13

Squareness

NJEM0019S1301

1. Measure dimension "S".

   Out-of-square "S":
   Less than 1.80 mm (0.0709 in)
2. If it exceeds the limit, replace spring.

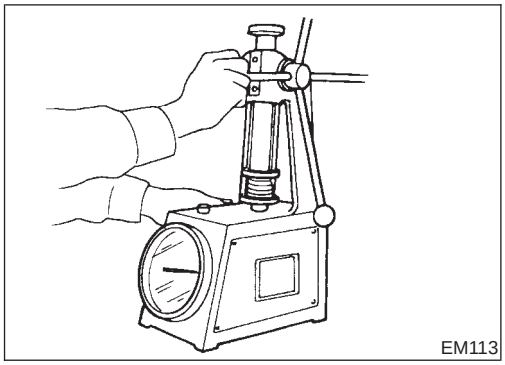
EM113

Pressure

NJEM0019S1302

Check valve spring pressure at specified spring height.

Pressure:

For Sedan

Standard

344.42 N (35.12 kg, 77.44 lb) at 25.26 mm (0.9945 in)

Limit

More than 323.73 N (33.01 kg, 72.79 lb) at 25.26 mm (0.9945 in)

For Hatchback

Standard

370.0 N (37.73 kg, 83.19 lb) at 23.64 mm (0.9307 in)

Limit

More than 347.8 N (35.46 kg, 78.19 lb) at 23.64 mm (0.9307 in)

If it exceeds the limit, replace spring.

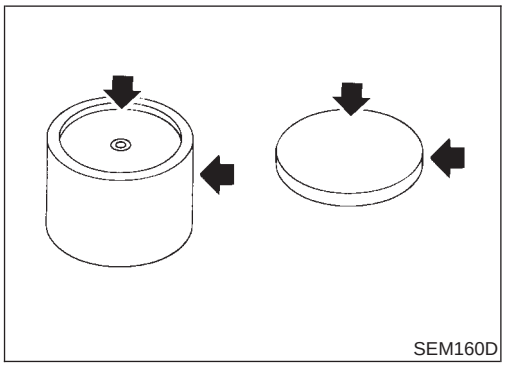
SEM160D

VALVE LIFTER AND VALVE SHIM

NJEM0019S16

1. Check contact and sliding surfaces for wear or scratches.

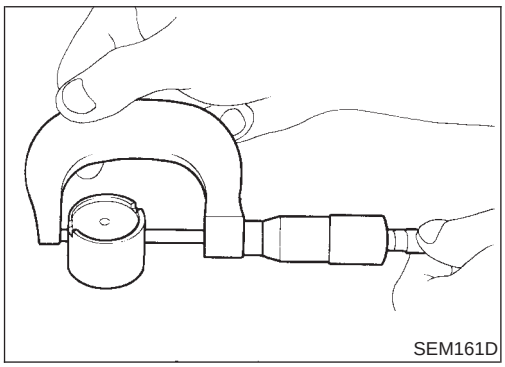
SEM161D

2. Check diameter of valve lifter and valve lifter guide bore.

Valve lifter outside diameter:

29.960 - 29.975 mm (1.1795 - 1.1801 in)

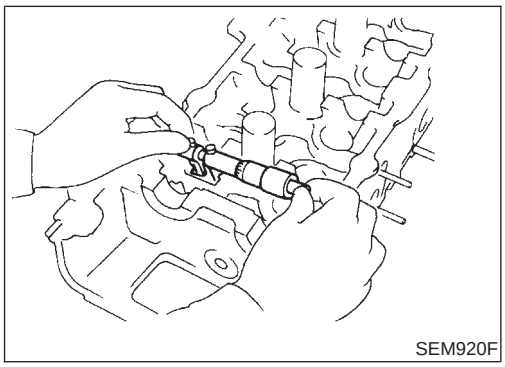
SEM920F

Lifter guide inside diameter:

30.000 - 30.021 mm (1.1811 - 1.1819 in)

Clearance between valve lifter and valve lifter guide:

0.025 - 0.065 mm (0.0010 - 0.0026 in)

If it exceeds the limit, replace valve lifter or cylinder head which exceeds the standard diameter tolerance.

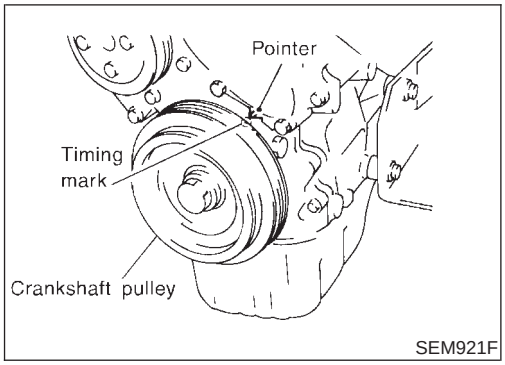

SEM921F

Valve Clearance

NJEM0041

CHECKING

NJEM0041S01

Check valve clearance while engine is warm and not running.

1. Remove rocker cover.
2. Remove all spark plugs.
3. Set No. 1 cylinder at TDC on its compression stroke.
- Align pointer with TDC mark on crankshaft pulley.
- Check that valve lifters on No. 1 cylinder are loose and valve lifters on No. 4 are tight.
- If not, turn crankshaft one revolution (360°) and align as described above.

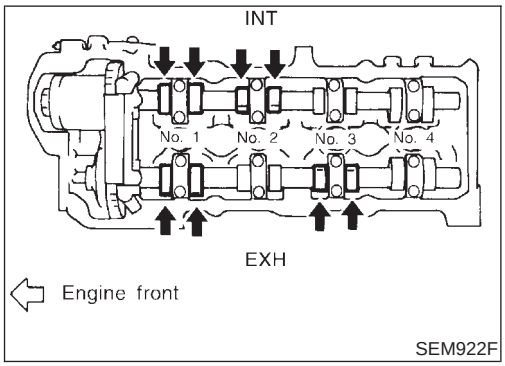

SEM922F

4. Check only those valves shown in the figure.

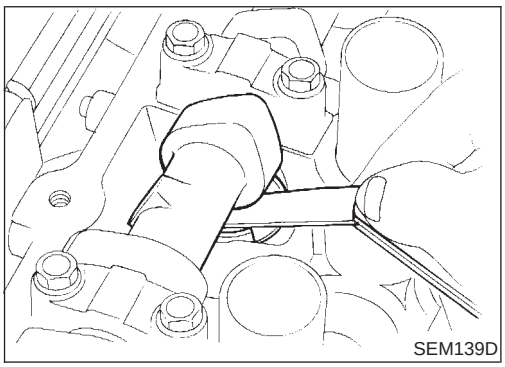
SEM139D

- Using a feeler gauge, measure clearance between valve lifter and camshaft.
- Record any valve clearance measurements which are out of specification. They will be used later to determine the required replacement adjusting shim.

Valve clearance for checking (Hot):

Intake

0.21 - 0.49 mm (0.008 - 0.019 in)

Exhaust

0.30 - 0.58 mm (0.012 - 0.023 in)

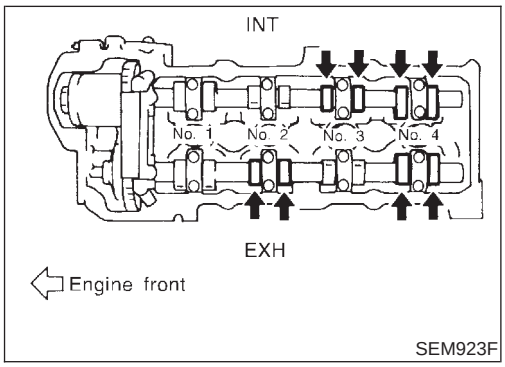

SEM923F

5. Turn crankshaft one revolution (360°) and align mark on crankshaft pulley with pointer.
6. Check only those valves shown in the figure.
- Use the same procedure as mentioned in step 4.
7. If all valve clearances are within specification, install the following parts:
- Rocker cover
- All spark plugs

ADJUSTING

NJEM0041S02

Adjust valve clearance while engine is cold.

1. Turn crankshaft. Position cam lobe upward on camshaft for valve that must be adjusted.
2. Place Tool (A) around camshaft as shown in figure.

Before placing Tool (A), rotate notch toward center of cylinder head. (See figure.) This will simplify shim removal later.

CAUTION:

Be careful not to damage cam surface with Tool (A).

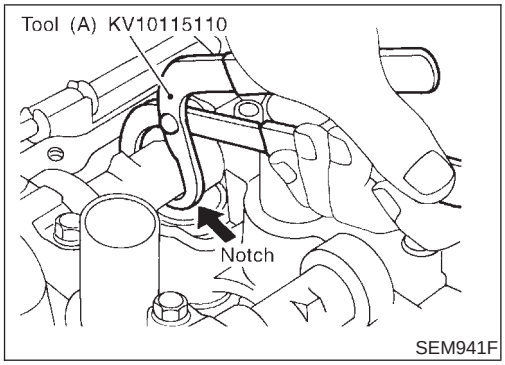

SEM941F

3. Rotate Tool (A) so that valve lifter is pushed down.

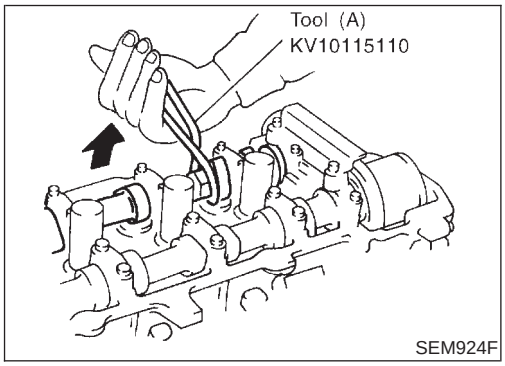

SEM924F

4. Place Tool (B) between camshaft and valve lifter to retain valve lifter.

CAUTION:

- **Tool (B) must be placed as close to camshaft bracket as possible.**
- **Be careful not to damage cam surface with Tool (B).**

5. Remove Tool (A).

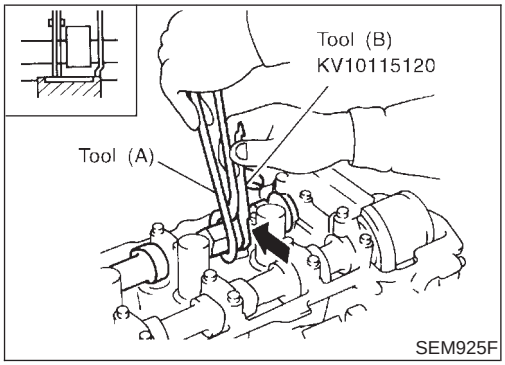

SEM925F

6. Remove adjusting shim using a small screwdriver and a magnetic finger.
7. Determine replacement adjusting shim size using the following formula.

- Use a micrometer to determine thickness of removed shim.
- Calculate thickness of new adjusting shim so valve clearance comes within specified values.
  R = Thickness of removed shim
  N = Thickness of new shim
  M = Measured valve clearance

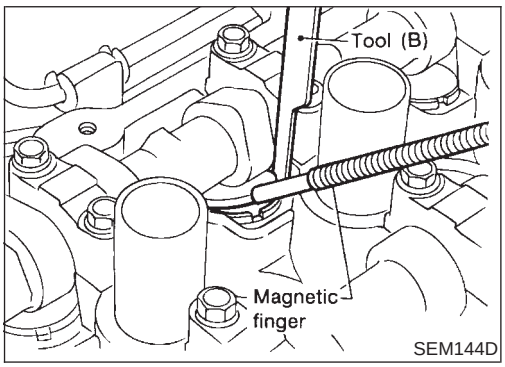

SEM144D

Intake:

N = R + [M − 0.37 mm (0.0146 in)]

Exhaust:

N = R + [M − 0.40 mm (0.0157 in)]

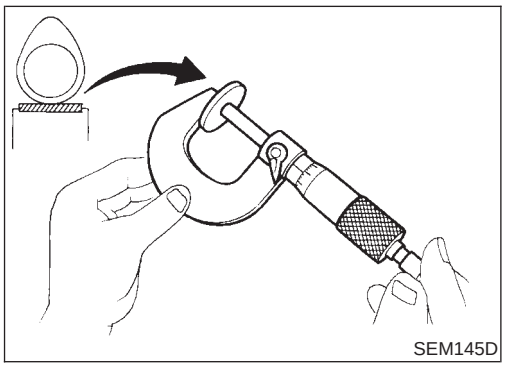
SEM145D

Shims are available in 50 sizes from 2.00 mm (0.0787 in) to 2.98 mm (0.1173 in), in steps of 0.02 mm (0.0008 in).

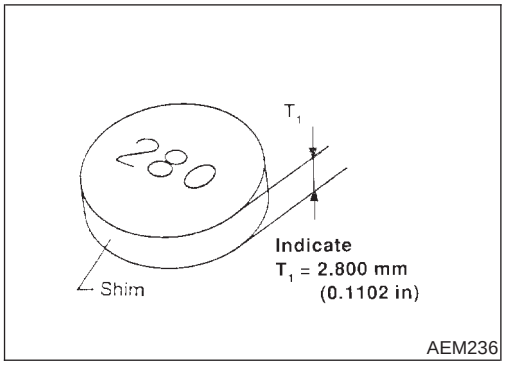

AEM236

- Select the closest size shim to the calculated thickness. Refer to chart in SDS, EM-69.

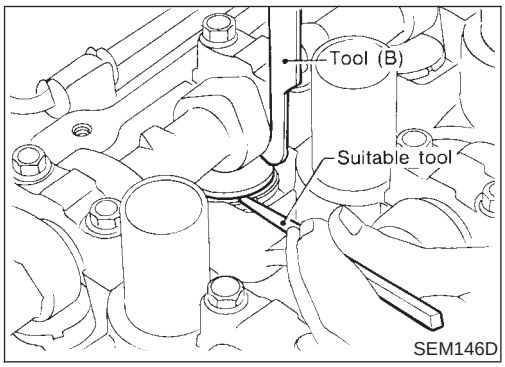

SEM146D

8. Install new shim using a suitable tool.
- **Install with the surface on which the thickness is stamped facing down.**

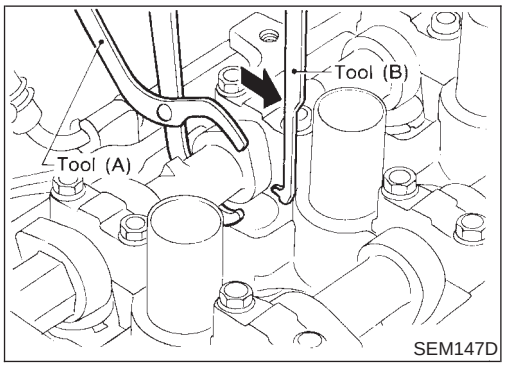

SEM147D

9. Place Tool (A) as explained in steps 2 and 3.
10. Remove Tool (B).
11. Remove Tool (A).
12. Recheck valve clearance.

Valve clearance:

Unit: mm (in)

	For adjusting		For checking
	Hot	Cold* (reference data)	Hot
Intake	0.32 - 0.40 (0.013 - 0.016)	0.25 - 0.33 (0.010 - 0.013)	0.21 - 0.49 (0.008 - 0.019)
Exhaust	0.37 - 0.45 (0.015 - 0.018)	0.32 - 0.40 (0.013 - 0.016)	0.30 - 0.58 (0.012 - 0.023)

*: At a temperature of approximately 20°C (68°F)

Whenever valve clearances are adjusted to cold specifications, check that the clearances satisfy hot specifications and adjust again if necessary.

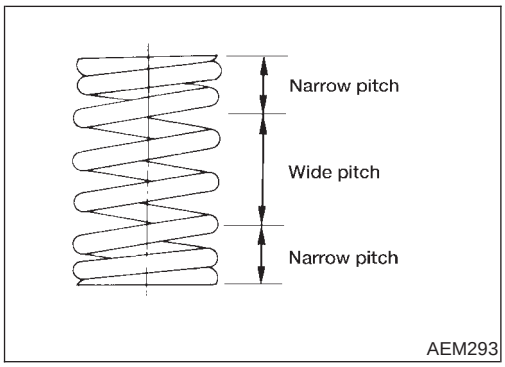

AEM293

Assembly

NJEM0020

1. Install valve component parts.
- **Always use new valve oil seal. Refer to EM-32.**
- **Before installing valve oil seal, install valve spring seat.**
- **After installing valve components, tap valve stem tip with a plastic hammer to assure a proper fit.**
- **Install valve spring (narrow pitch at both ends of spring) with either end toward cylinder head.**

Installation

NJEM0021

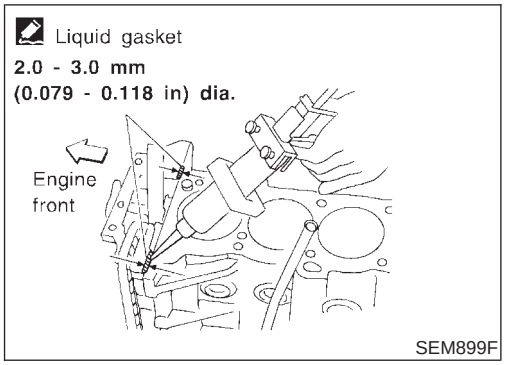

1. Before installing cylinder head gasket, apply a continuous bead of liquid gasket to mating surface of cylinder block.
2. Install cylinder head gasket.

- **When installing cylinder head with manifolds, use new cylinder head gasket.**

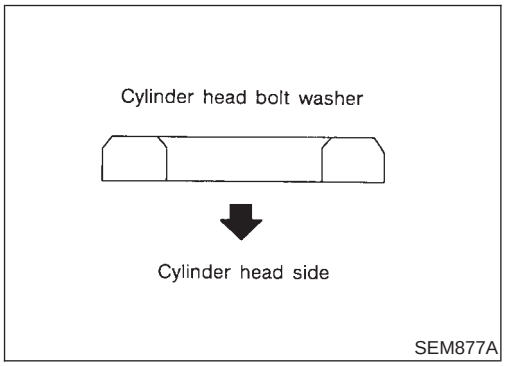

3. Install cylinder head with manifolds.

- **Be sure to install washers between bolts and cylinder head.**
- **Do not rotate crankshaft and camshaft separately, or valves will strike piston heads.**
- **Apply new engine oil to cylinder head bolt threads and seat surfaces.**

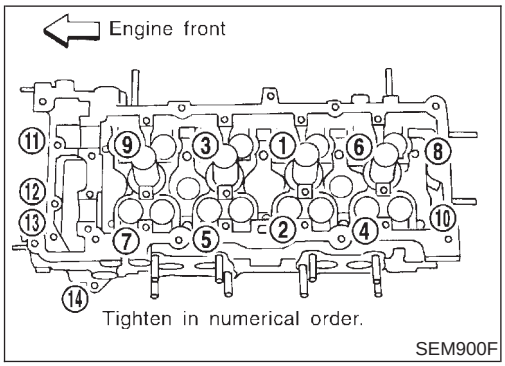

- **Tightening procedure**
  a. Tighten bolts to 29 N·m (3 kg-m, 22 ft-lb).
  b. Tighten bolts to 59 N·m (6 kg-m, 43 ft-lb).
  c. Loosen bolts completely.
  d. Tighten bolts to 29 N·m (3 kg-m, 22 ft-lb).
  e. Turn bolts 50 to 55 degrees clockwise or if angle wrench is not available, tighten bolts to 59±4.9 N·m (6±0.5 kg-m, 43±3.6 ft-lb).
  f. Tightening bolts (11 - 14) to 6.3 to 8.3 N·m (0.64 to 0.85 kg-m, 55.8 to 73.5 in-lb).

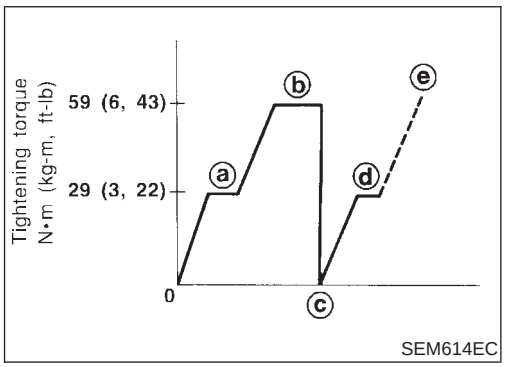

	Tightening torque N·m (kg-m, ft-lb)				
	a	**b**	**c**	**d**	**e, f**
Bolts (**1 - 10**)	29 (3, 22)	59 (6, 43)	0 (0, 0)	29 (3, 22)	50 - 55 degrees or 59±4.9 (6±0.5, 43±3.6 ft-lb)
Bolts (**11 - 14**)	—	—	—	—	6.3 - 8.3 (0.64 - 0.85, 55.8 - 73.5 in-lb)

4. Install camshaft.

- The camshafts are distinguished by a paint mark as follows.
  Intake camshaft: Other paint color than white
  Exhaust camshaft: White paint or no paint

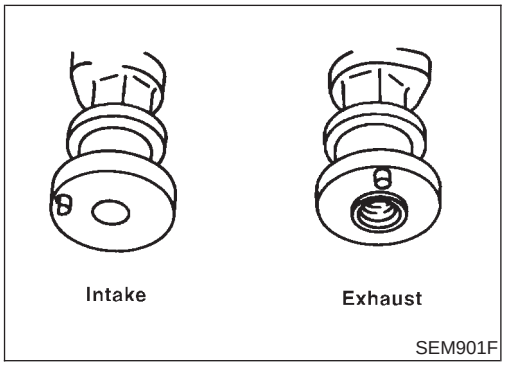

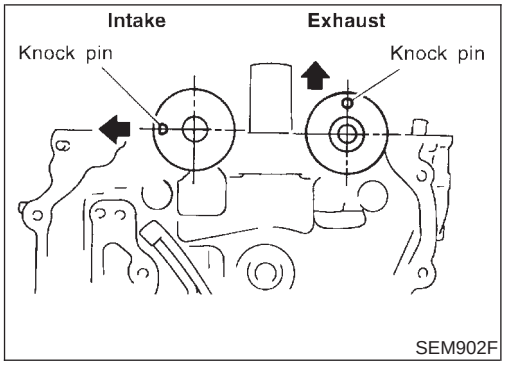

- **Make sure camshafts are aligned as shown in figure.**

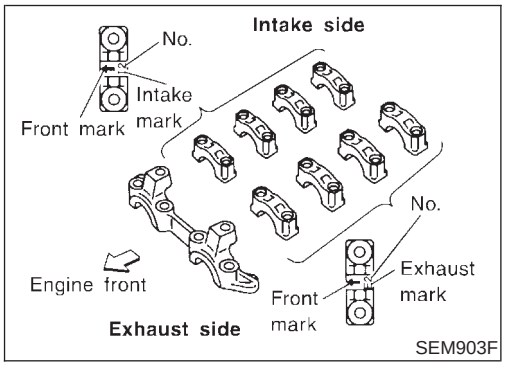

5. Install camshaft brackets.
- **Make sure camshaft brackets are aligned as marked during disassembly.**

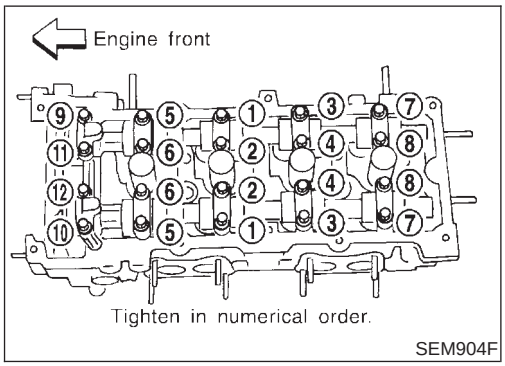

- **Apply new engine oil to bolt threads and seat surface.**
- **Tighten camshaft bracket bolts in the following steps.**
  a. Tighten bolts 9 - 12, then 1 - 8.
  2.0 N·m (0.204 kg-m, 17.7 in-lb)
  b. Tighten bolts 1 - 12.
  5.9 N·m (0.60 kg-m, 52.2 in-lb)
  c. Tighten bolts 1 - 12.
  9.0 - 11.8 N·m (0.92 - 1.20 kg-m, 80 - 104 in-lb)
- **If any part of valve assembly or camshaft is replaced, check valve clearance according to reference data.**
  After completing assembly check valve clearance. Refer to "Checking" and "Adjusting" in "VALVE CLEARANCE" (EM-44).

  Reference data valve clearance (Cold):
  Intake
  0.25 - 0.33 mm (0.010 - 0.013 in)
  Exhaust
  0.32 - 0.40 mm (0.013 - 0.016 in)

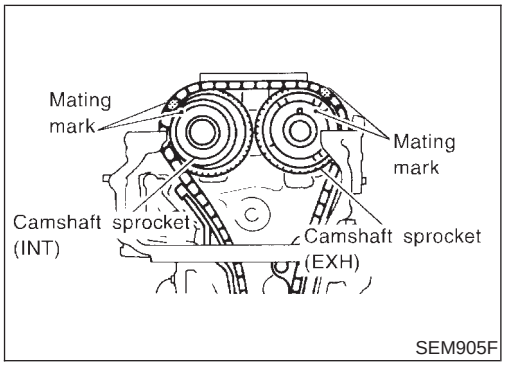

6. Install camshaft sprocket.
- **Set timing chain by aligning mating marks with those of camshaft sprockets.**

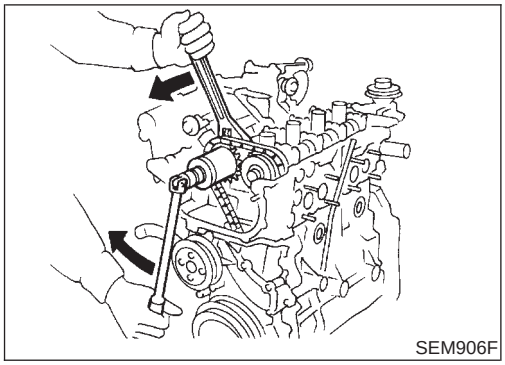
SEM906F

7. Install camshaft sprocket bolts to correct torque.
- **Apply new engine oil to bolt threads and seat surface.**

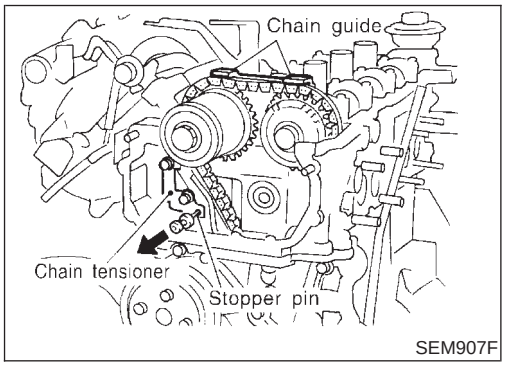

SEM907F

8. Install chain tensioner.
- **Before installing chain tensioner, insert a suitable pin into pin hole of chain tensioner.**
- **After installing chain tensioner, remove the pin.**
9. Install timing chain guide.

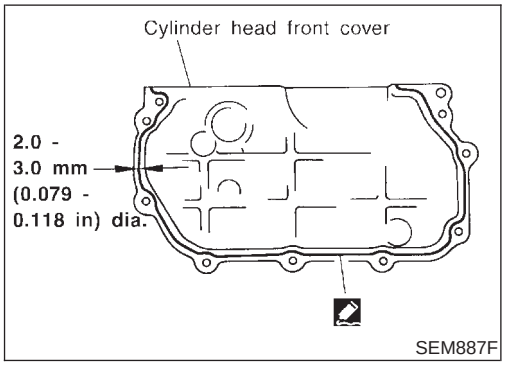

SEM887F

10. Install cylinder head front cover.
- Apply liquid gasket to cylinder head front cover.
- Use Genuine Liquid Gasket or equivalent.

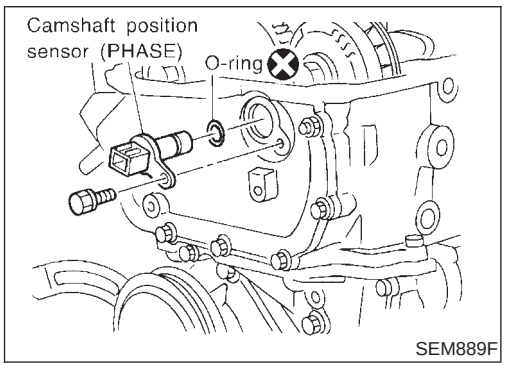

SEM889F

11. Install camshaft position sensor (PHASE).

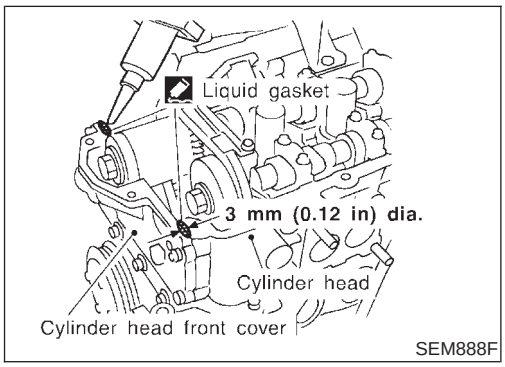

SEM888F

12. Before installing rocker cover, apply a continuous bead of liquid gasket to mating surface of cylinder head.

Installation (Cont'd)

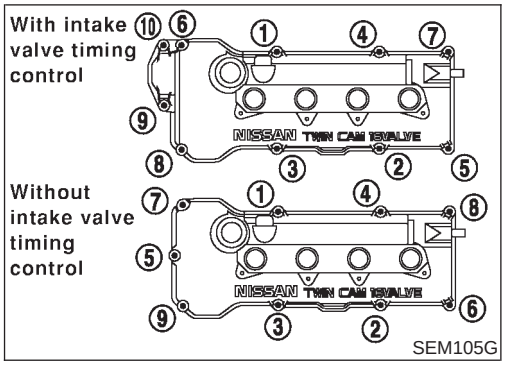

13. Install rocker cover with rocker cover gasket and tighten bolts in numerical order as shown in the figure.
14. Install spark plugs.
15. Install ignition coils.
16. Install exhaust manifold.
17. Install intake manifold rear supports.
18. Connect vacuum hoses, fuel hoses, water hose, wire, harness, connectors and so on.
19. Install front exhaust tube.
20. Install front undercovers.
21. Install air duct to intake manifold collector.
22. Drive belts.
    For adjusting drive belt deflection, refer to "Checking", EM-16.
23. Reinstall parts in reverse order of removal.

Removal and Installation

NJEM0022

SEC. 112

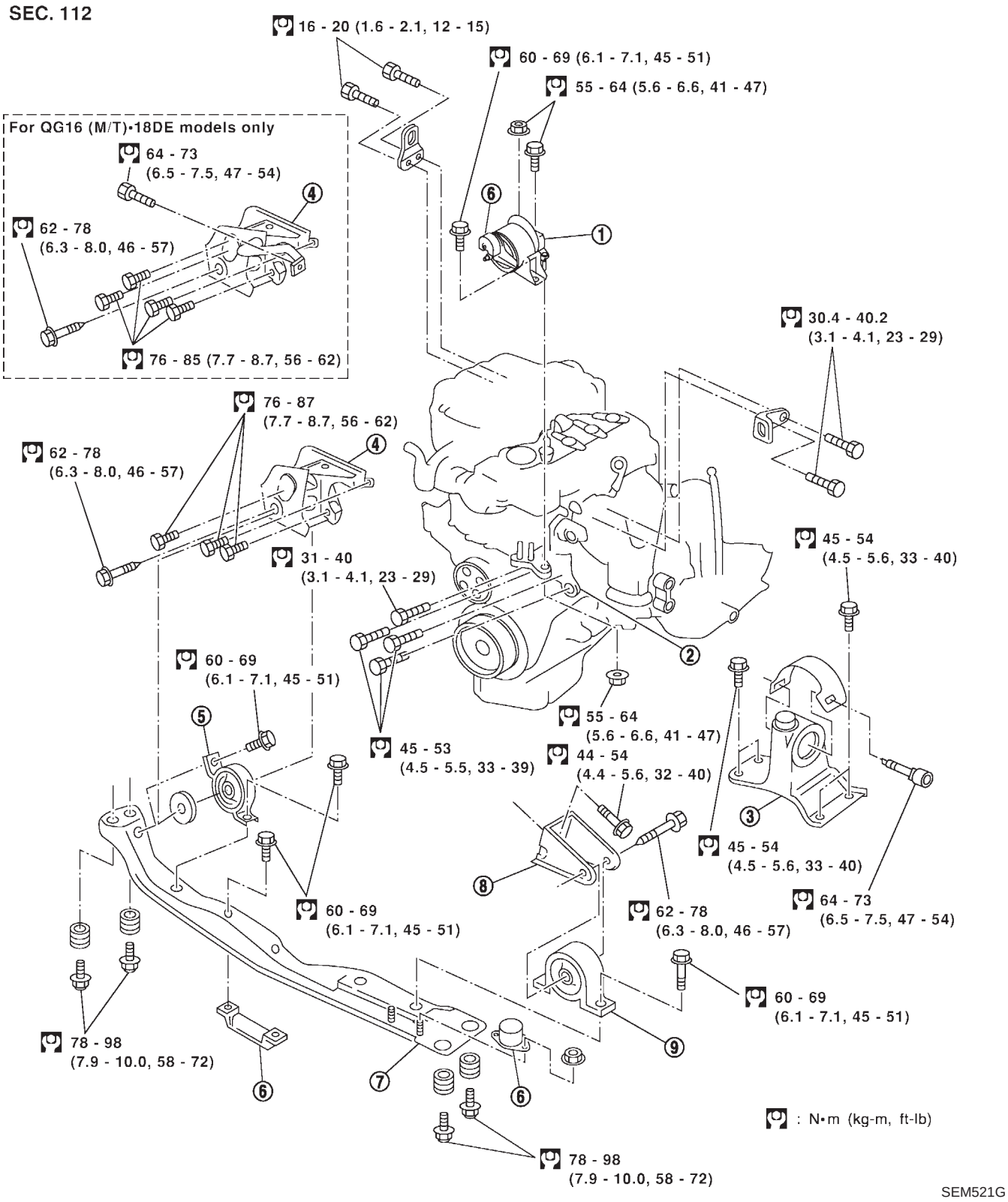

1. RH engine mounting
2. RH engine mounting bracket
3. LH engine mounting
4. Rear engine mounting bracket
5. Rear engine mounting
6. Dynamic damper (Specific models only)
7. Center member
8. Front engine mounting bracket
9. Front engine mounting

WARNING:

- **Position vehicle on a flat and solid surface.**
- **Place chocks at front and back of rear wheels.**
- **Do not remove engine until exhaust system has completely cooled off, otherwise, you may burn yourself and/or fire may break out in fuel line.**
- **Before disconnecting fuel hose, release pressure. Refer to EC-40, "Fuel Pressure Release".**
- **Be sure to lift engine and transaxle in a safe manner.**
- **For engines not equipped with engine slingers, attach proper slingers and bolts described in PARTS CATALOG.**

CAUTION:

- **When lifting engine, be sure to clear surrounding parts. Use special care near accelerator wire casing, brake lines and brake master cylinder.**
- **When lifting the engine, always use engine slingers in a safe manner.**
- **When removing drive shaft, be careful not to damage grease seal of transaxle.**
- **Before separating engine and transaxle, remove crankshaft position sensor (POS) from the cylinder block assembly.**
- **Always be extra careful not to damage edge of crankshaft position sensor (POS), or signal plate teeth.**

Engine cannot be removed separately from transaxle. Remove engine with transaxle as an assembly.

REMOVAL

NJEM0022S01

1. Drain coolant from radiator and cylinder block. Refer to LC-18, "Changing Engine Coolant".
2. Remove coolant reservoir tank and bracket.
3. Drain engine oil.
4. Remove battery and battery tray.
5. Remove air cleaner and air duct.
6. Remove drive belts.
7. Remove alternator and air conditioner compressor from engine.
8. Remove power steering oil pump from engine and position aside.

Power steering oil pump does not need to be disconnected from power steering tubes.

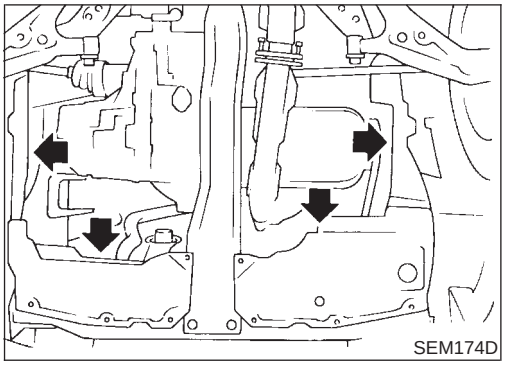
SEM174D

9. Remove the following parts:
- RH and LH front tires
- Splash covers
- RH and LH brake caliper assemblies
  Refer to BR-27, "FRONT DISC BRAKE".

  Brake hose does not need to be disconnected from brake caliper assembly. Never depress brake pedal.
- RH & LH drive shaft. Refer to AX-10, "Drive Shaft".

  When removing drive shaft, be careful not to damage transaxle side grease seal.

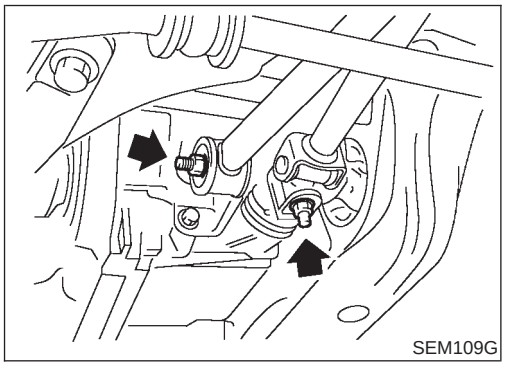
SEM109G

- Disconnect control rod and support rod from transaxle. (M/T models.)
  Refer to MT-29, "TRANSAXLE GEAR CONTROL".
- Disconnect control cable from transaxle. (A/T models.)
  Refer to AT-354, "Removal".

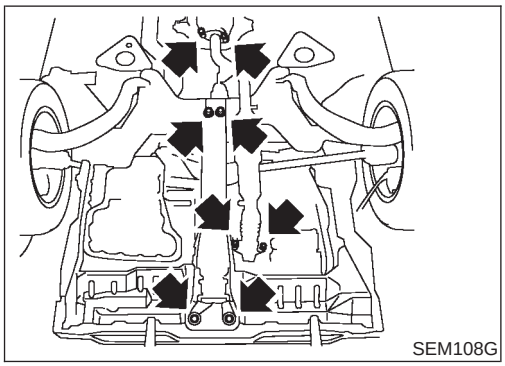
SEM108G

- Center member
- Front exhaust tube
- Stabilizer bar
- Cooling fan
- Radiator
- Disconnect wires, harness, pipes, hoses and so on.

10. Lift up engine slightly and disconnect or remove all engine mountings.

When lifting engine, be sure to clear surrounding parts. Use special care near brake tubes and brake master cylinder.

11. Remove engine with transaxle as shown.

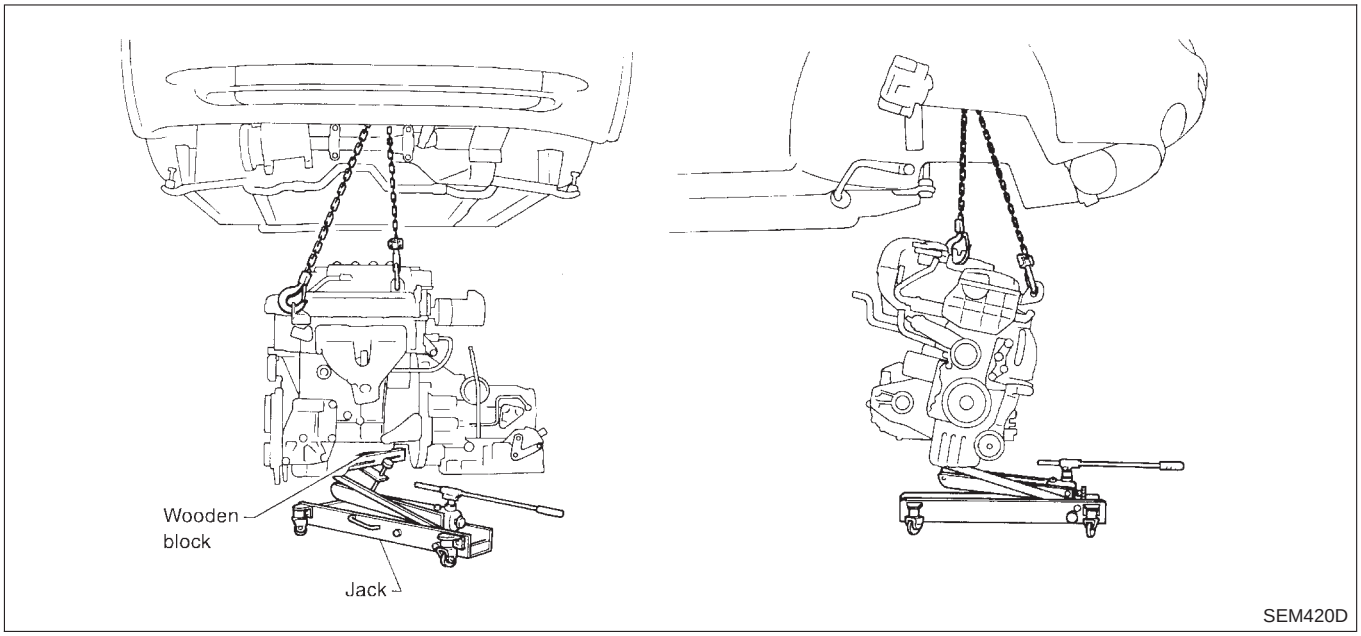

SEM420D

INSTALLATION

NJEM0022S02

- Install in reverse order of removal.

Components

NJEM0023

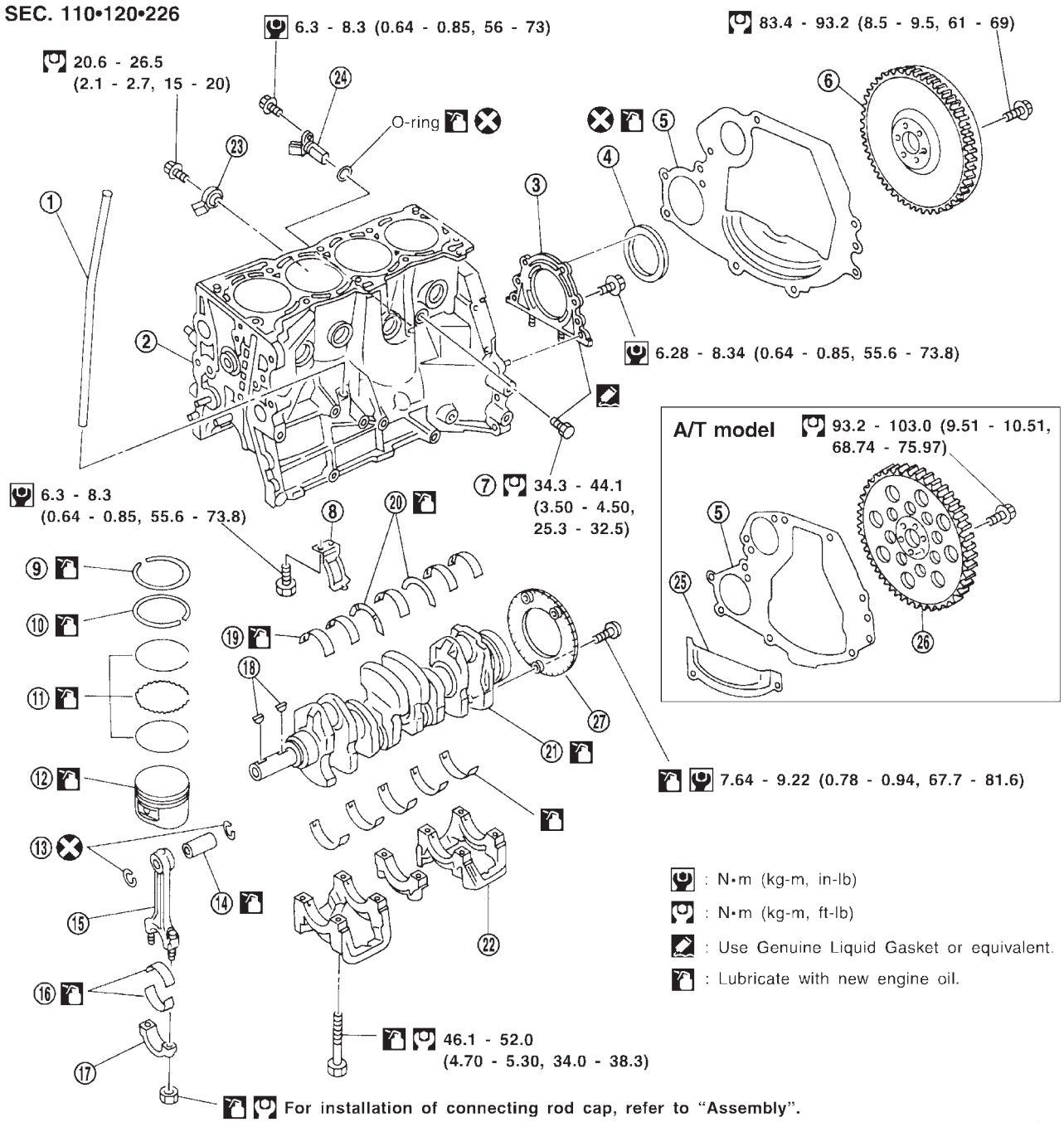

SEM926FA

1. Oil level gauge guide
2. Cylinder block
3. Rear oil seal retainer
4. Rear oil seal
5. Rear plate
6. Flywheel
7. Drain plug
8. Buffle plate
9. Top ring
10. 2nd ring
11. Oil ring
12. Piston
13. Snap ring
14. Piston pin
15. Connecting rod
16. Connecting rod bearing
17. Connecting rod cap
18. Key
19. Main bearing
20. Thrust bearing
21. Crankshaft
22. Main bearing cap
23. Knock sensor
24. Crankshaft position sensor (POS)
25. Rear lower plate
26. Drive plate
27. Signal plate

Removal and Installation

NJEM0024

CAUTION:

- **When installing sliding parts such as bearings and pistons, apply engine oil on the sliding surfaces.**
- **Place removed parts, such as bearings and bearing caps, in their proper order and direction.**
- **When installing connecting rod nuts and main bearing cap bolts, apply new engine oil to threads and seating surfaces.**
- **Do not allow any magnetic materials to contact the signal plate teeth of flywheel or drive plate, and rear plate.**
- **Remove the crankshaft position sensor (POS).**
- **Be careful not to damage sensor edges and single plate teeth.**

Disassembly

NJEM0025

PISTON AND CRANKSHAFT

NJEM0025S01

1. Place engine on a work stand.
2. Drain coolant and oil.
3. Remove timing chain.
   Refer to EM-24.

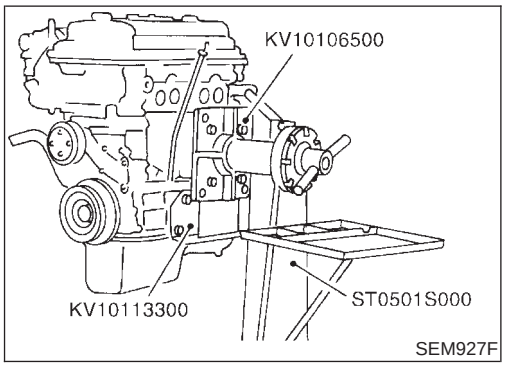

SEM927F

4. Remove pistons with connecting rod.

- When disassembling piston and connecting rod, remove snap ring first. Then heat piston to 60 to 70°C (140 to 158°F) or use piston pin press stand at room temperature.

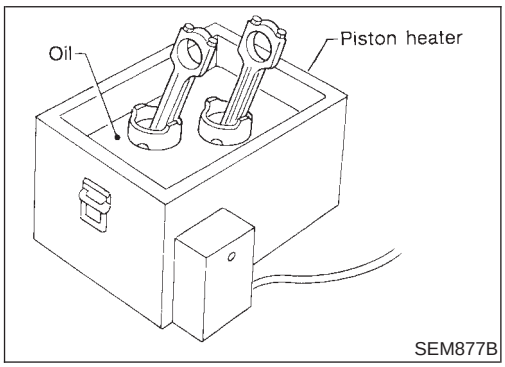

SEM877B

CAUTION:

- **When piston rings are not replaced, make sure that piston rings are mounted in their original positions.**
- **When replacing piston rings, if there is no punch mark, install with either side up.**

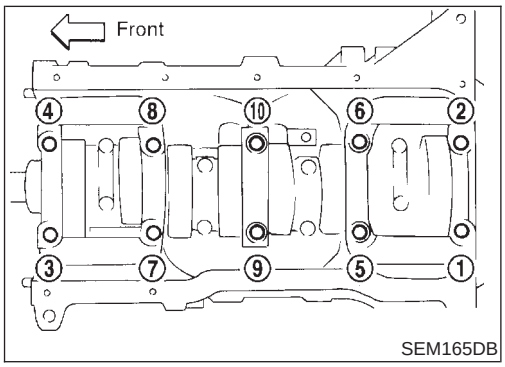

SEM165DB

5. Loosen main bearing caps in numerical order as shown in figure.
6. Remove bearing caps, main bearings and crankshaft.

- **Before removing bearing caps, measure crankshaft end play. Refer to EM-63.**
- **Bolts should be loosened in two or three steps.**

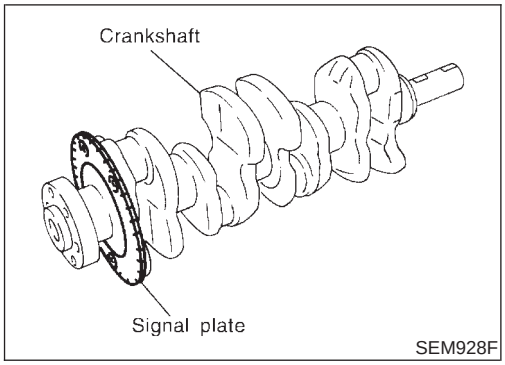

7. Remove signal plate from crankshaft.

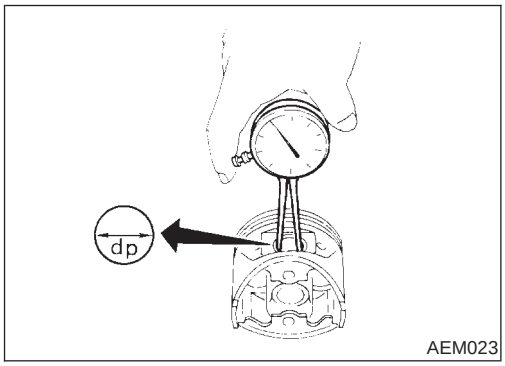

Inspection

NJEM0026

PISTON AND PISTON PIN CLEARANCE

NJEM0026S01

1. Measure inner diameter of piston pin hole "dp".

   Standard diameter "dp":

   QG18DE

   18.993 - 19.005 mm (0.7478 - 0.7482 in)

   Except for QG18DE

   18.987 - 18.999 mm (0.7475 - 0.7480 in)

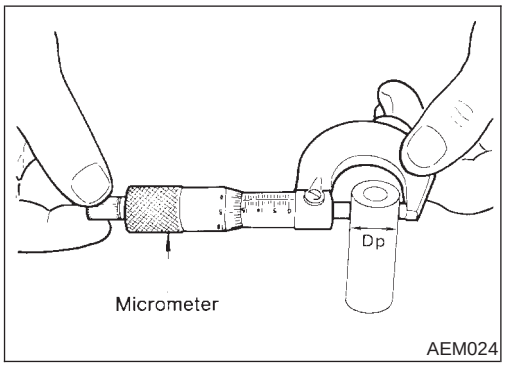

2. Measure outer diameter of piston pin "Dp".

   Standard diameter "Dp":

   18.989 - 19.001 mm (0.7476 - 0.7481 in)

3. Calculate piston pin clearance.

   QG18DE

   Dp − dp: 0.002 - 0.006 mm (0.0001 - 0.0002 in)

   Except for QG18DE

   Dp − dp: −0.004 to 0 mm (−0.0002 to 0 in)

   If it exceeds the above value, replace piston assembly with pin.

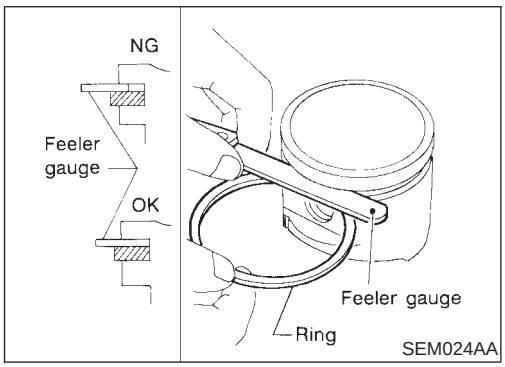

PISTON RING SIDE CLEARANCE

NJEM0026S02

Side clearance:

Refer to SDS, EM-74.

Max. limit of side clearance:

Refer to SDS, EM-74.

If out of specification, replace piston and/or piston ring assembly.

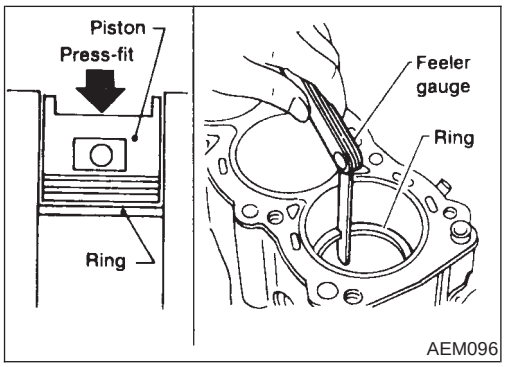

PISTON RING END GAP

NJEM0026S03

End gap:

Refer to SDS, EM-74.

Max. limit of end gap:

Refer to SDS, EM-74.

If out of specification, replace piston ring. If gap exceeds maximum limit with a new ring, rebore cylinder and use oversized piston and piston rings.

Refer to SDS, EM-74.

- When replacing the piston, check the cylinder bore surface for

scratches or seizure. If scratches or seizure is found, hone or replace the cylinder block.

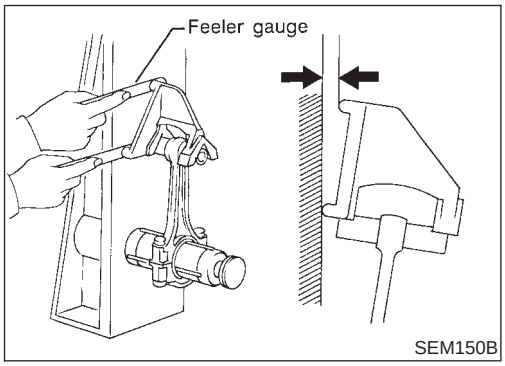

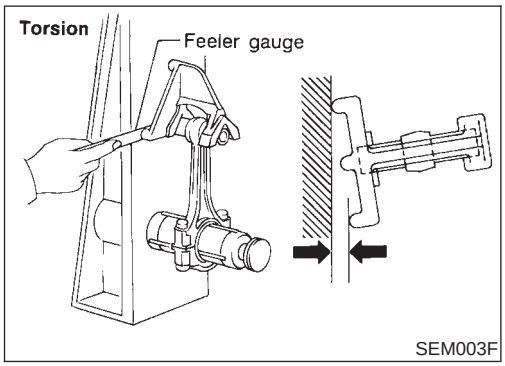

CONNECTING ROD BEND AND TORSION

NJEM0026S04

Bend:

Limit 0.15 mm (0.0059 in)
per 100 mm (3.94 in) length

Torsion:

Limit 0.3 mm (0.012 in)
per 100 mm (3.94 in) length

If it exceeds the limit, replace connecting rod assembly.

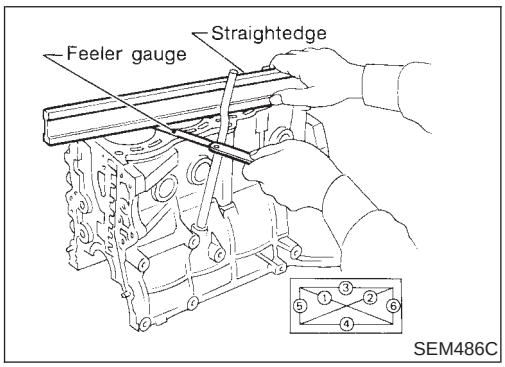

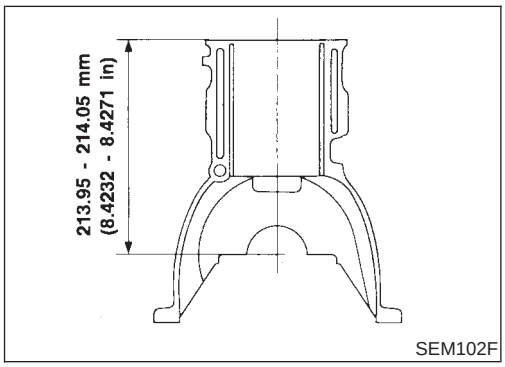

CYLINDER BLOCK DISTORTION AND WEAR

NJEM0026S05

Clean upper surface of cylinder block.
Use a reliable straightedge and feeler gauge to check the flatness of cylinder block surface. Check along six positions shown in figure.

Block surface flatness:

Standard Less than 0.03 mm (0.0012 in)
Limit 0.10 mm (0.004 in)

If out of specification, resurface it.
The limit for cylinder block resurfacing is determined by the amount of cylinder head resurfacing.

Amount of cylinder head resurfacing is "A".
Amount of cylinder block resurfacing is "B".

The maximum limit is as follows:

A + B = 0.2 mm (0.008 in)

Nominal cylinder block height from crankshaft center:

213.95 - 214.05 mm (8.4232 - 8.4271 in)

If necessary, replace cylinder block.

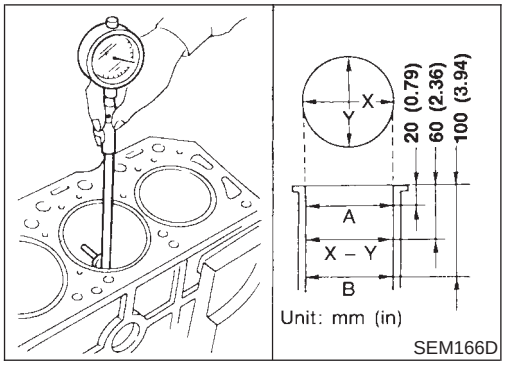

SEM166D

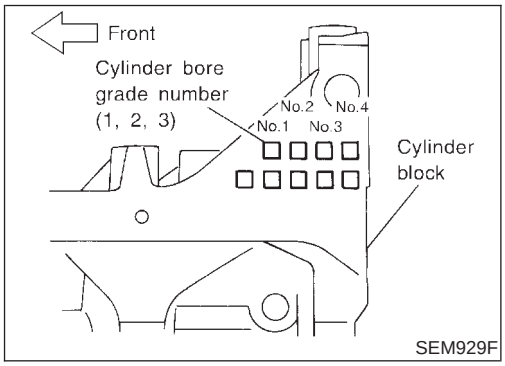

SEM929F

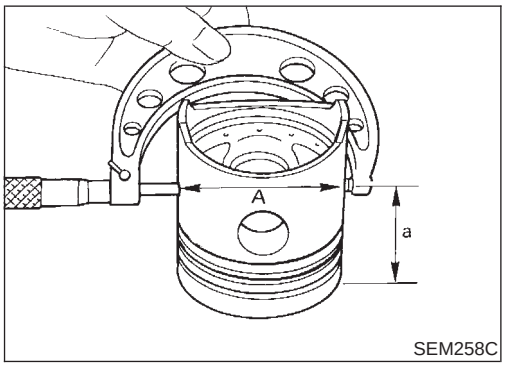

SEM258C

PISTON-TO-BORE CLEARANCE

NJEM0026S06

1. Using a bore gauge, measure cylinder bore for wear, out-of-round and taper.

   Standard inner diameter:
   Refer to SDS, EM-73.
   Wear limit:
   0.2 mm (0.008 in)
   Out-of-round (X − Y) standard:
   Less than 0.015 mm (0.0006 in)
   Taper (A − B) standard:
   Less than 0.01 mm (0.0004 in)

   If it exceeds the limit, rebore all cylinders. Replace cylinder block if necessary.
2. Check for score and seizure. If seizure is found, hone it.

- **If cylinder block or piston is replaced, match piston grade with grade number on cylinder block lower surface.**

3. Measure piston skirt diameter.

   Piston diameter "A":
   Refer to SDS, EM-74.
   Measuring point "a" (Distance from the top):
   Refer to SDS, EM-74.
4. Check that piston-to-bore clearance is within specification.

   Piston-to-bore clearance = cylinder bore measurement "B" − Piston diameter "A":
   Refer to SDS, EM-74.
5. Determine piston oversize according to amount of cylinder wear.

Oversize pistons are available for service. Refer to SDS EM-74.

6. Cylinder bore size is determined by adding piston-to-bore clearance to piston diameter "A".

   Rebored size calculation:
   D = A + B − C
   where,
   D: Bored diameter
   A: Piston diameter as measured
   B: Piston-to-bore clearance
   C: Honing allowance 0.02 mm (0.0008 in)
7. Install main bearing caps and tighten bolts to the specified torque. This will prevent distortion of cylinder bores.
8. Cut cylinder bores.

- **When any cylinder needs boring, all other cylinders must also be bored.**
- **Do not cut too much out of cylinder bore at a time. Cut only 0.05 mm (0.0020 in) or so at a time.**

9. Hone cylinders to obtain specified piston-to-bore clearance.
10. Measure finished cylinder bore for out-of-round and taper.

- **Measurement should be done after cylinder bore cools down.**

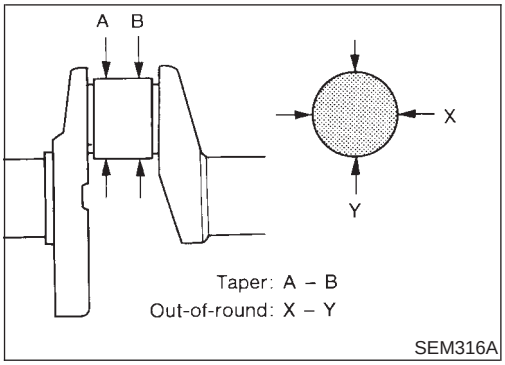

SEM316A

CRANKSHAFT

NJEM0026S07

1. Check crankshaft main and pin journals for score, wear or cracks.
2. With a micrometer, measure journals for taper and out-of-round.

   Out-of-round (X – Y):
   Less than 0.003 mm (0.0001 in)
   Taper (A – B):
   Less than 0.004 mm (0.0002 in)

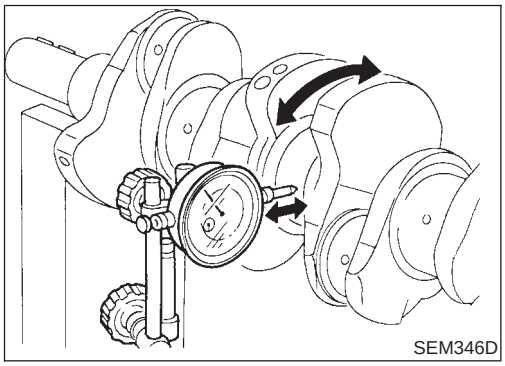
SEM346D

3. Measure crankshaft runout.

   Runout (Total indicator reading):
   Less than 0.04 mm (0.0016 in)

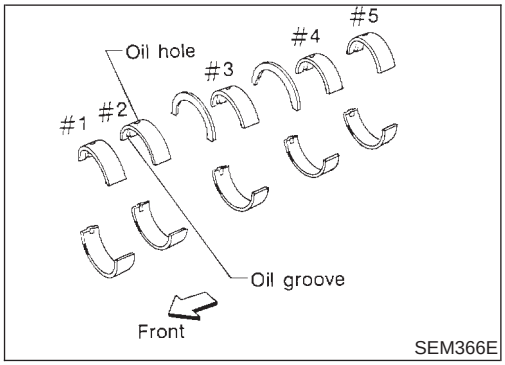

SEM366E

BEARING CLEARANCE

NJEM0026S08

- Use Method A or Method B. Method A is preferred because it is more accurate.

Method A (Using bore gauge and micrometer)

Main bearing

NJEM0026S0801

1. Set main bearings in their proper positions on cylinder block and main bearing cap.

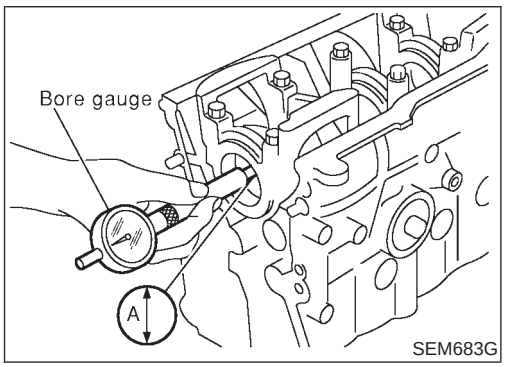

SEM683G

2. Install main bearing cap to cylinder block.

Tighten all bolts in correct order in two or three stages. Refer to EM-63.

3. Measure inner diameter "A" of each main bearing.

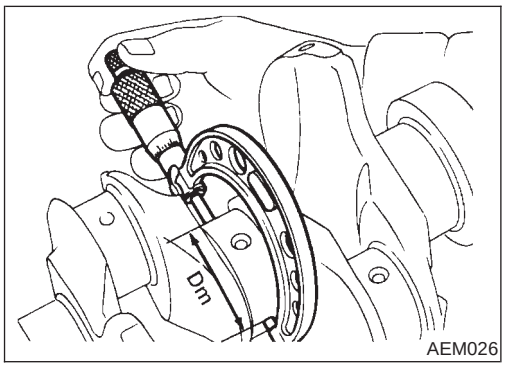

AEM026

4. Measure outer diameter "Dm" of each main journal in crankshaft.
5. Calculate main bearing clearance.

   Main bearing clearance = A – Dm
   Standard: 0.020 - 0.044 mm (0.0008 - 0.0017 in)
   Limit: 0.1 mm (0.004 in)

   If it exceeds the limit, replace bearing.
   If clearance cannot be adjusted within standard of any bearing, grind crankshaft journal and use undersized bearing.

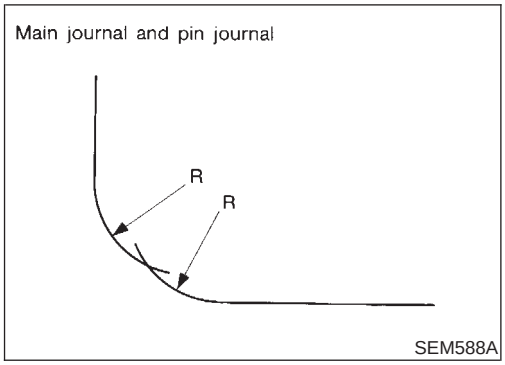

When grinding crank pin and crank journal:

- **Grind until clearance is within specified standard bearing clearance.**
- **Fillets should be finished as shown in the figure. R: 2.3 - 2.5 mm (0.091 - 0.098 in)**

Refer to SDS, EM-76 for standard bearing clearance and available spare parts.

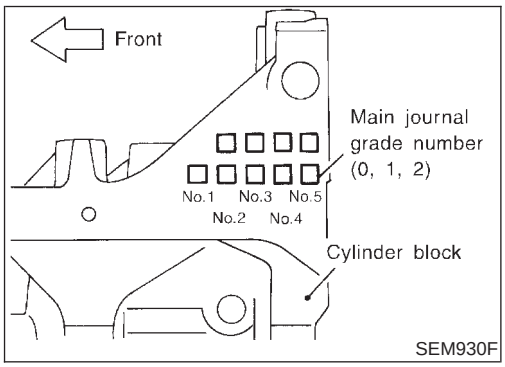

6. If the crankshaft is replaced, select thickness of main bearings as follows:

a. Grade number of each cylinder block main journal is punched on the respective cylinder block. These numbers are punched in either Arabic or Roman numerals.

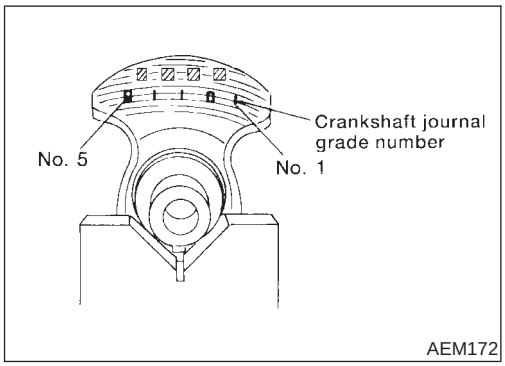

b. Grade number of each crankshaft main journal is punched on the respective crankshaft. These numbers are punched in either Arabic or Roman numerals.

c. Select main bearing with suitable thickness according to the following table.

Main bearing grade color:

Crankshaft main journal grade number	Cylinder block main journal grade number		
	0	1	2
0	Black	Brown or Red	Green
1	Brown or Red	Green	Yellow
2	Green	Yellow	Blue

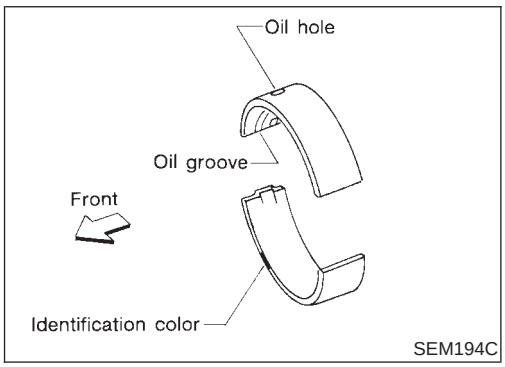

For example:
Cylinder block main journal grade number: 1
Crankshaft main journal grade number: 2
Main bearing grade number = 1 + 2 = Yellow

Connecting rod bearing (Big end)

NJEM0026S0802

1. Install connecting rod bearing to connecting rod and cap.
2. Install connecting rod cap to connecting rod.

Tighten bolts to the specified torque.

3. Measure inner diameter "C" of each bearing.

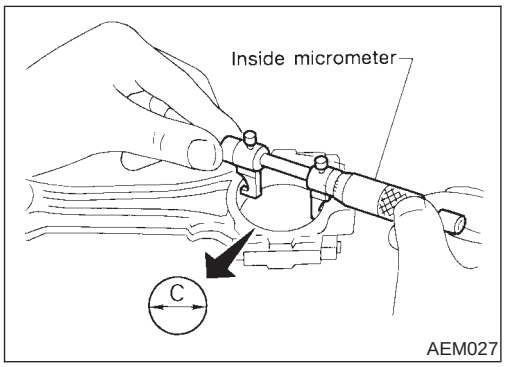

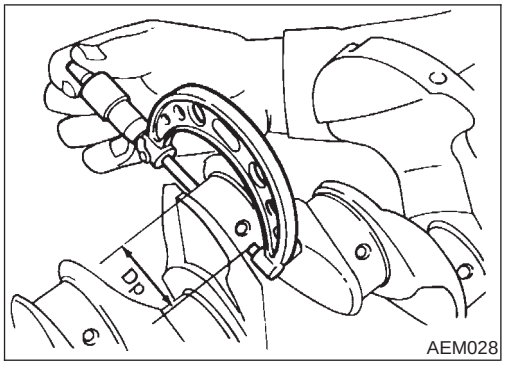

AEM028

4. Measure outer diameter "Dp" of each crankshaft pin journal.
5. Calculate connecting rod bearing clearance.

Connecting rod bearing clearance = C − Dp

Standard: 0.014 - 0.039 mm (0.0006 - 0.0015 in)

Limit: 0.1 mm (0.004 in)

If it exceeds the limit, replace bearing.
If clearance cannot be adjusted using any standard bearing grade, grind crankshaft journal and use undersized bearing. Refer to step 5, EM-59.

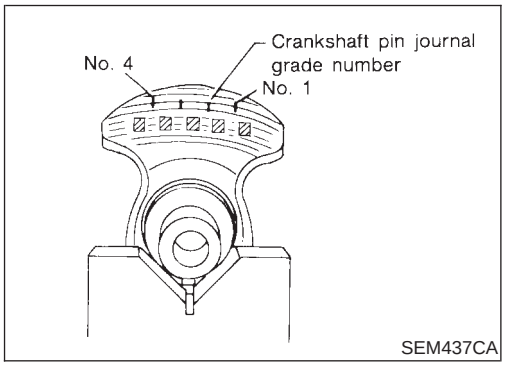

SEM437CA

- If a new bearing, crankshaft or connecting rod is replaced, select connecting rod bearing according to the following table.

Connecting rod bearing grade number:
These numbers are punched in either Arabic or Roman numerals.

Crankshaft pin journal grade number	Connecting rod bearing grade color
0	—
1	Brown
2	Green

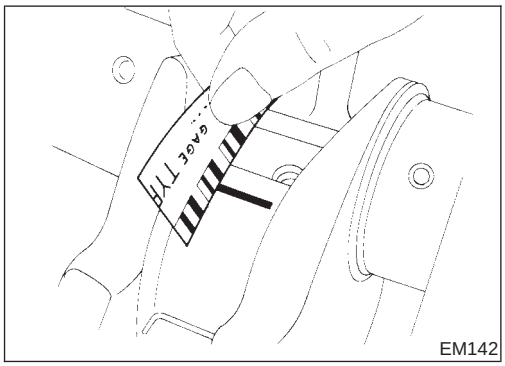
EM142

Method B (Using Plastigage)

CAUTION:

- **Do not turn crankshaft or connecting rod while Plastigage is being inserted.**
- **If incorrect bearing clearance exists, use a thicker or undersized main bearing to ensure specified clearance.**

CONNECTING ROD BUSHING CLEARANCE (SMALL END)

NJEM0026S09

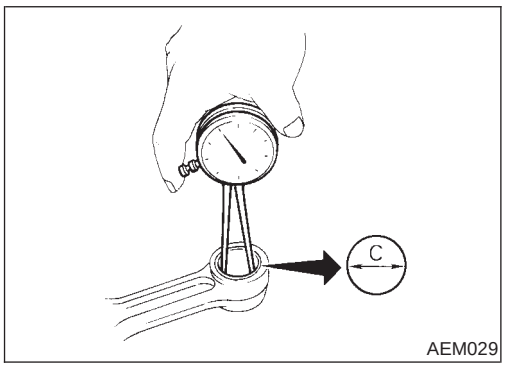

AEM029

1. Measure inner diameter "C" of bushing.

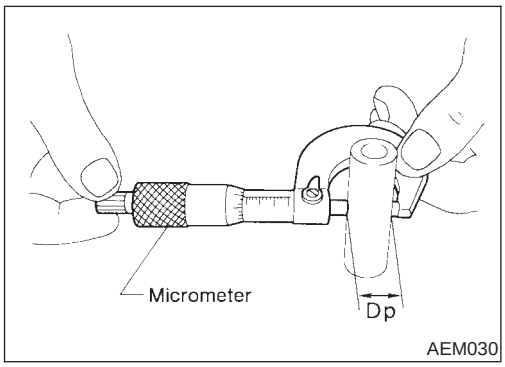

AEM030

2. Measure outer diameter "Dp" of piston pin.
3. Calculate connecting rod bushing clearance.

Connecting rod bushing clearance = C − Dp

Standard:

0.005 - 0.017 mm (0.0002 - 0.0007 in)

Limit:

0.023 mm (0.0009 in)

If it exceeds the limit, replace connecting rod assembly or connecting rod bushing and/or piston pin.

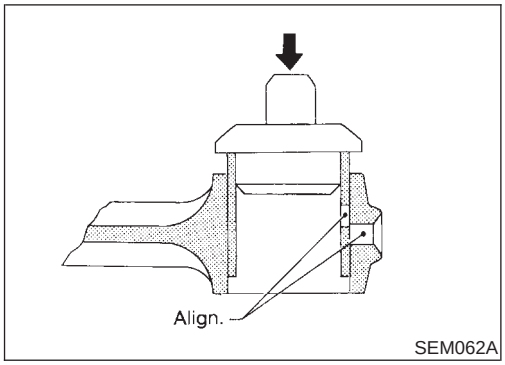

SEM062A

REPLACEMENT OF CONNECTING ROD BUSHING (SMALL END)

NJEM0026S10

1. Drive in small end bushing until it is flush with end surface of rod.

Be sure to align the oil holes.

2. Ream the bushing so that clearance with piston pin is within specification.

Clearance between connecting rod bushing and piston pin:

0.005 - 0.017 mm (0.0002 - 0.0007 in)

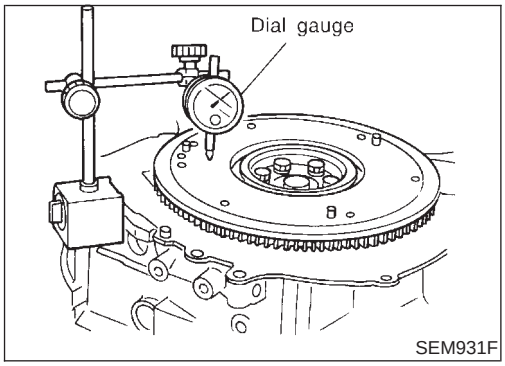

SEM931F

FLYWHEEL/DRIVE PLATE RUNOUT

NJEM0026S12

Runout (Total indicator reading):

Flywheel (M/T models)

Less than 0.15 mm (0.0059 in)

Drive plate (A/T models)*

Less than 0.2 mm (0.008 in)

***Measuring points: Approximately 115 mm (4.53 in) from crankshaft center**

CAUTION:

- **Do not allow any magnetic materials to contact the ring gear teeth and rear plate.**
- **Do not resurface flywheel. Replace as necessary.**

Assembly

NJEM0027

PISTON

NJEM0027S01

1. Install new snap ring on one side of piston pin hole.

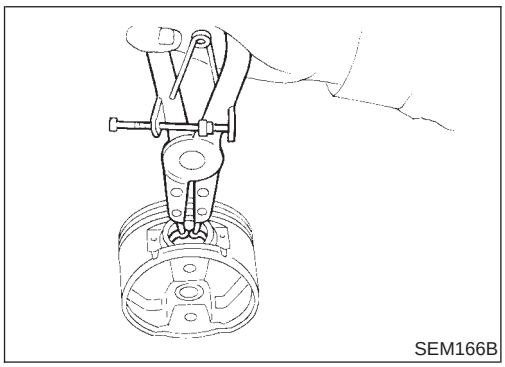
SEM166B

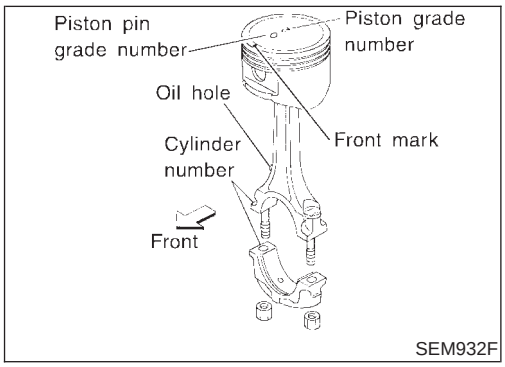

SEM932F

2. Heat piston to 60 to 70°C (140 to 158°F) and assemble piston, piston pin, connecting rod and new snap ring.

- **Align the direction of piston and connecting rod.**
- **Numbers stamped on connecting rod and cap correspond to each cylinder.**
- **After assembly, make sure connecting rod swings smoothly.**

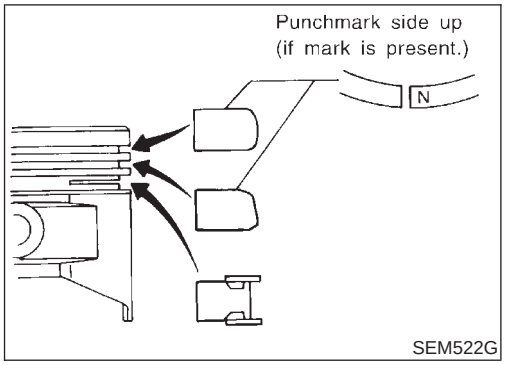

3. Set piston rings as shown.

CAUTION:

- **When piston rings are not replaced, make sure that piston rings are mounted in their original position.**
- **Install new piston rings either side up if there is no punch mark.**

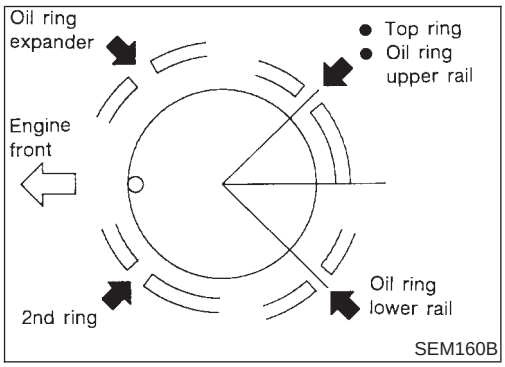

- **Align piston rings so that end gaps are positioned as shown.**

CRANKSHAFT

NJEM0027S02

1. Install signal plate to crankshaft.
2. Set main bearings in their proper positions on cylinder block and main bearing cap.

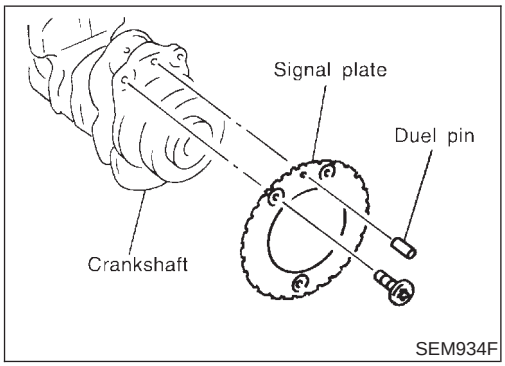

- **Confirm that correct main bearings are selected by using Method A or Method B. Refer to EM-59.**
- **Apply new engine oil to bearing surfaces.**

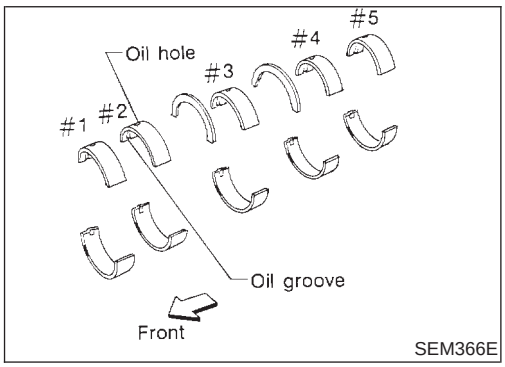

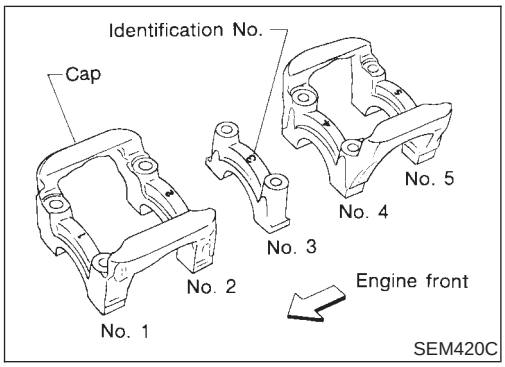

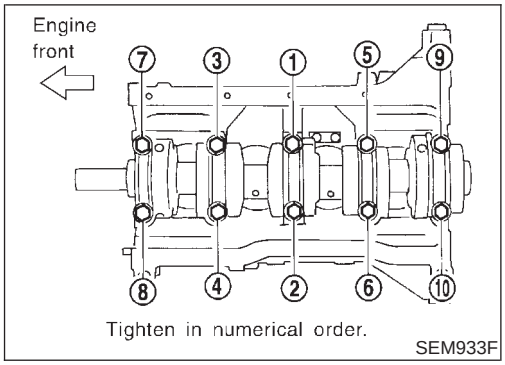

3. Install crankshaft and main bearing caps and tighten bolts to the specified torque.

- **Apply new engine oil to the bolt thread and seat surface.**
- **Prior to tightening bearing cap bolts, shift crankshaft back and forth to properly seat the bearing caps.**
- **Tighten bearing cap bolts gradually in two or three stages. Start with center bearing and move outward as shown in figure.**
- **After securing bearing cap bolts, make sure crankshaft turns smoothly by hand.**

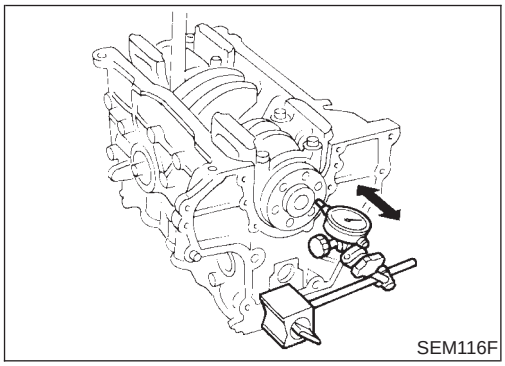

4. Measure crankshaft end play.

Crankshaft end play:

Standard

0.060 - 0.220 mm (0.0024 - 0.0087 in)

Limit

0.3 mm (0.012 in)

If beyond the limit, replace thrust bearing with new ones.

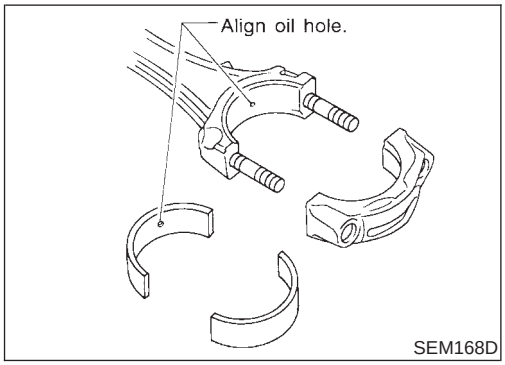

5. Install connecting rod bearings in connecting rods and connecting rod caps.

- **Confirm that correct bearings are used. Refer to EM-60.**
- **Install bearings so that oil hole in connecting rod aligns with oil hole of bearing.**
- **Apply new engine oil to bolt threads and bearing surfaces.**

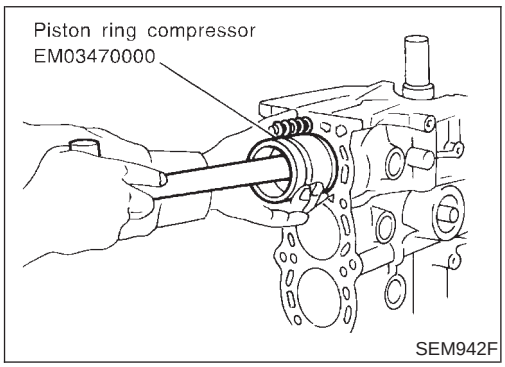

6. Install pistons with connecting rods.

a. Install them into corresponding cylinders with Tool.

- **Make sure connecting rod does not scratch cylinder wall.**
- **Make sure connecting rod bolts do not scratch crankshaft pin journals.**
- **Arrange so that front mark on piston head faces engine.**
- **Apply new engine oil to piston rings and sliding surface of piston.**

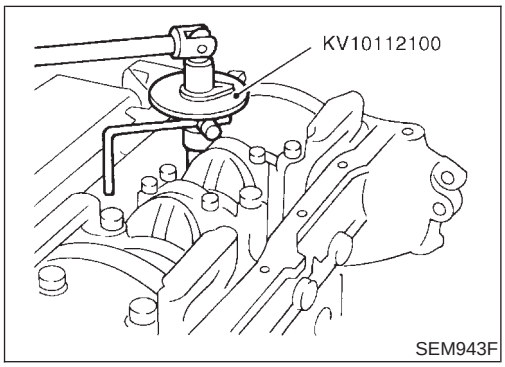

b. Install connecting rod caps.
Apply new engine oil to bolt threads and nut seating surfaces.
Tighten connecting rod cap nuts in the following procedure:

- **Tighten to 13.72 to 15.68 N·m (1.399 to 1.599 kg-m, 10.120 to 11.566 ft-lb).**
- **Turn nuts to 35° to 40° degrees clockwise with an angle wrench. If an angle wrench is not available, tighten nuts to 23 to 28 N·m (2.3 to 2.9 kg-m, 17 to 21 ft-lb).**

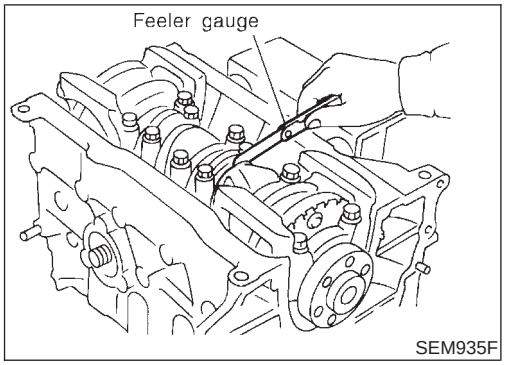

7. Measure connecting rod side clearance.

Connecting rod side clearance:

Standard

0.200 - 0.470 mm (0.0079 - 0.0185 in)

Limit

0.5 mm (0.020 in)

If beyond the limit, replace connecting rod and/or crankshaft.

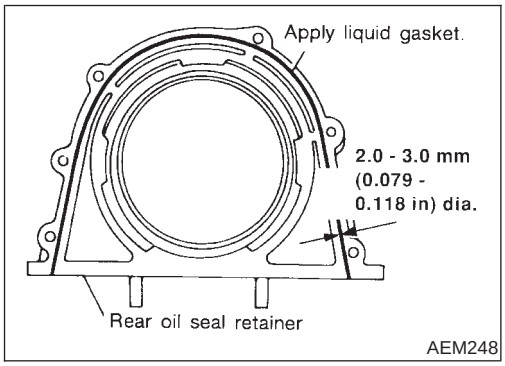

8. Install rear oil seal retainer.

a. Before installing rear oil seal retainer, remove old liquid gasket from cylinder block and retainer.

b. Apply a continuous bead of liquid gasket to rear oil seal retainer.

- **Use Genuine Liquid Gasket or equivalent.**
- **Apply around inner side of bolt holes.**

9. Install crankshaft positon sensor (POS).

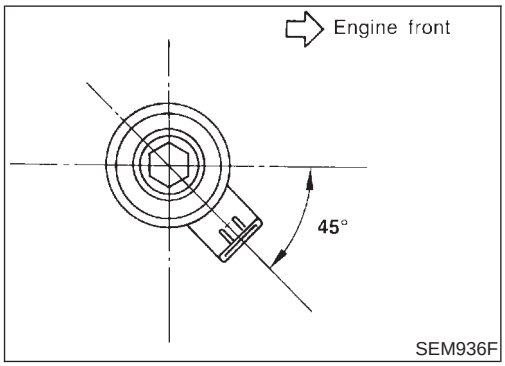

10. Install knock sensor.

General Specifications

NJEM0028

Engine		QG15DE	QG18DE
Classification		Gasoline	
Cylinder arrangement		4, in-line	
Displacement cm^3 (cu in)		1,497 (91.35)	1,769 (107.94)
Bore × stroke mm (in)		73.6 × 88.0 (2.898 × 3.465)	80.0 × 88.0 (3.150 × 3.465)
Valve arrangement		DOHC	
Firing order		1-3-4-2	
Number of piston rings	Compression	2	
	Oil	1	
Number of main bearings		5	
Compression ratio		9.9	9.5

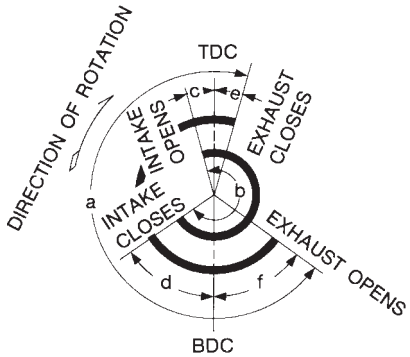

EM120

		a	b	c	d	e	f
Valve timing	QG18DE with intake valve timing control	222°	236°	0° (20°)	56° (36°)	−2°	44°
	Except for QG18DE with intake valve timing control	222°	222°	0°	42°	−2°	44°

( ): Valve timing control ON

Compression Pressure

NJEM0029

Unit: kPa (bar, kg/cm^2, psi)/350 rpm

Standard	1,324 (13.24, 13.5, 192) 1,372 (13.720, 13.99, 198.9)*
Minimum	1,128 (11.28, 11.5, 164) 1,176 (11.759, 11.99, 170.5)*
Difference limit between cylinders	98 (0.98, 1.0, 14)

*: For QG15DE

Belt Deflection

NJEM0045

Unit: mm (in)

		Applied engine	Used belt deflection		Deflection of new belt
			Limit	Deflection after adjustment	
Alternator	With air conditioner compressor	QG15·18DE	8.1 (0.319)	5.3 - 5.7 (0.209 - 0.224)	4.5 - 5.0 (0.177 - 0.197)
	Without air conditioner compressor	QG15·18DE	10.2 (0.402)	6.5 - 7.0 (0.256 - 0.276)	5.5 - 6.1 (0.217 - 0.240)
Power steering oil pump		Sedan with QG15DE	8.5 (0.335)	5.2 - 5.8 (0.205 - 0.228)	4.6 - 5.2 (0.181 - 0.205)
		Except for Sedan with QG15DE	7.1 (0.280)	4.4 - 4.9 (0.173 - 0.193)	3.9 - 4.4 (0.154 - 0.173)
Applied pushing force		98 N (10 kg, 22 lb)			

Spark Plug

NJEM0046

		NGK	Champion
Type	Standard	BKR5E-11	RC10YC4
	Hot	BKR4E-11	—
	Cold	BKR6E-11	—
Plug gap mm (in)		1.0 - 1.1 (0.039 - 0.043)	

Cylinder Head

NJEM0030

Unit: mm (in)

	Standard	Limit
Head surface flatness	Less than 0.03 (0.0012)	0.1 (0.004)
Height	117.8 - 118.0 (4.638 - 4.646)	—

Valve

VALVE

NJEM0031

NJEM0031S01

Unit: mm (in)

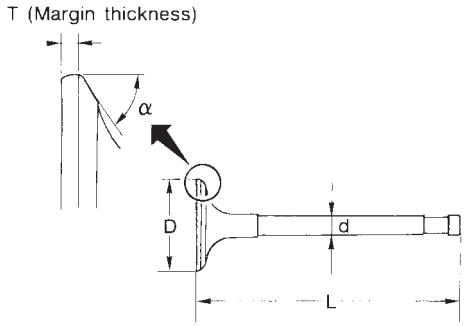

SEM188A

		QG15DE	QG18DE
Valve head diameter “D”	Intake	28.9 - 29.2 (1.138 - 1.150)	29.9 - 30.2 (1.177 - 1.189)
	Exhaust	23.9 - 24.2 (0.941 - 0.953)	24.9 - 25.2 (0.980 - 0.992)
Valve length “L”	Intake	92.00 - 92.50 (3.6220 - 3.6417)	
	Exhaust	92.37 - 92.87 (3.6366 - 3.6563)	
Valve stem diameter “d”	Intake	5.465 - 5.480 (0.2152 - 0.2157)	
	Exhaust	5.445 - 5.460 (0.2144 - 0.2150)	
Valve face angle “α”		45°15′ - 45°45′	
Valve margin “T”		1 (0.04)	
Valve margin “T” limit		More than 0.5 (0.020 in)	
Valve stem end surface grinding limit		0.2 (0.008)	

VALVE SPRING

NJEM0031S02

Model		For Sedan	For Hatchback
Free height mm (in)		41.2 (1.622)	40.0 (1.575)
Pressure N (kg, lb) at height mm (in)	Standard	344.42 (35.12, 77.44) at 25.26 (0.9945)	370.0 (37.73, 83.19) at 23.64 (0.9307)
	Limit	323.73 (33.01, 72.79) at 25.26 (0.9945)	347.8 (35.46, 78.19) at 23.64 (0.9307)
Out-of-square mm (in)		Less than 1.80 (0.0709)	

VALVE LIFTER

NJEM0031S10

Unit: mm (in)

Valve lifter outside diameter	29.960 - 29.975 (1.1795 - 1.1801)
Lifter guide inside diameter	30.000 - 30.021 (1.1811 - 1.1819)
Clearance between valve lifter and valve lifter guide	0.025 - 0.065 (0.0010 - 0.0026)

VALVE CLEARANCE

=NJEM0031S11

Unit: mm (in)

	For adjusting		For checking
	Hot	Cold* (reference data)	Hot
Intake	0.32 - 0.40 (0.013 - 0.016)	0.25 - 0.33 (0.010 - 0.013)	0.21 - 0.49 (0.008 - 0.019)
Exhaust	0.37 - 0.45 (0.015 - 0.018)	0.32 - 0.40 (0.013 - 0.016)	0.30 - 0.58 (0.012 - 0.023)

*: At a temperature of approximately 20°C (68°F)

Whenever valve clearances are adjusted to cold specifications, check that the clearances satisfy hot specifications and adjust again if necessary.

VALVE GUIDE

NJEM0031S04

Unit: mm (in)

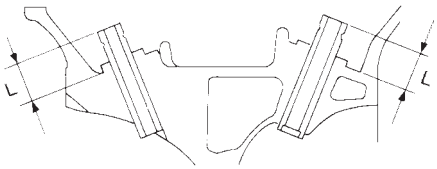

MEM096A

		Intake		Exhaust	
		Standard	Service	Standard	Service
Valve guide	Outer diameter	9.523 - 9.534 (0.3749 - 0.3754)	9.723 - 9.734 (0.3828 - 0.3832)	9.523 - 9.534 (0.3749 - 0.3754)	9.723 - 9.734 (0.3828 - 0.3832)
	Inner diameter [Finished size]	5.500 - 5.515 (0.2165 - 0.2171)		5.500 - 5.515 (0.2165 - 0.2171)	
Cylinder head valve guide hole diameter		9.475 - 9.496 (0.3730 - 0.3739)	9.685 - 9.696 (0.3813 - 0.3817)	9.475 - 9.496 (0.3730 - 0.3739)	9.685 - 9.696 (0.3813 - 0.3817)
Interference fit of valve guide		0.027 - 0.059 (0.0011 - 0.0023)	0.027 - 0.049 (0.0011 - 0.0019)	0.027 - 0.059 (0.0011 - 0.0023)	0.027 - 0.049 (0.0011 - 0.0019)
Stem to guide clearance		0.020 - 0.050 (0.0008 - 0.0020)		0.040 - 0.070 (0.0016 - 0.0028)	
Valve deflection limit (Dial gauge reading)		0.2 (0.008)			
Projection length "L"		11.5 - 11.7 (0.453 - 0.461)			

AVAILABLE SHIMS

NJEM0031S07

Thickness mm (in)	Identification mark
2.00 (0.0787)	200
2.02 (0.0795)	202
2.04 (0.0803)	204
2.06 (0.0811)	206
2.08 (0.0819)	208
2.10 (0.0827)	210
2.12 (0.0835)	212
2.14 (0.0843)	214
2.16 (0.0850)	216

2.18 (0.0858)	218
2.20 (0.0866)	220
2.22 (0.0874)	222
2.24 (0.0882)	224
2.26 (0.0890)	226
2.28 (0.0898)	228
2.30 (0.0906)	230
2.32 (0.0913)	232
2.34 (0.0921)	234
2.36 (0.0929)	236
2.38 (0.0937)	238
2.40 (0.0945)	240
2.42 (0.0953)	242
2.44 (0.0961)	244
2.46 (0.0969)	246
2.48 (0.0976)	248
2.50 (0.0984)	250
2.52 (0.0992)	252
2.54 (0.1000)	254
2.56 (0.1008)	256
2.58 (0.1016)	258
2.60 (0.1024)	260
2.62 (0.1031)	262
2.64 (0.1039)	264
2.66 (0.1047)	266
2.68 (0.1055)	268
2.70 (0.1063)	270
2.72 (0.1071)	272
2.74 (0.1079)	274
2.76 (0.1087)	276
2.78 (0.1094)	278
2.80 (0.1102)	280
2.82 (0.1110)	282
2.84 (0.1118)	284
2.86 (0.1126)	286
2.88 (0.1134)	288
2.90 (0.1142)	290
2.92 (0.1150)	292
2.94 (0.1157)	294
2.96 (0.1165)	296
2.98 (0.1173)	298

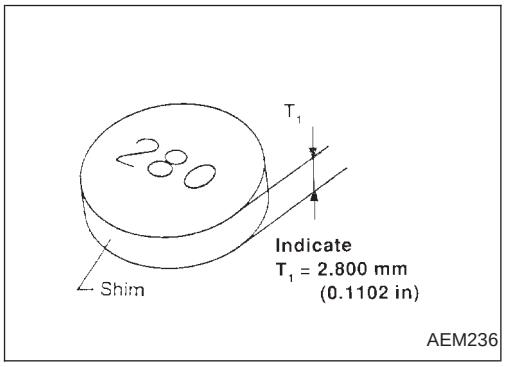

VALVE SEAT

NJEM0031S05

Unit: mm (in)

INTAKE

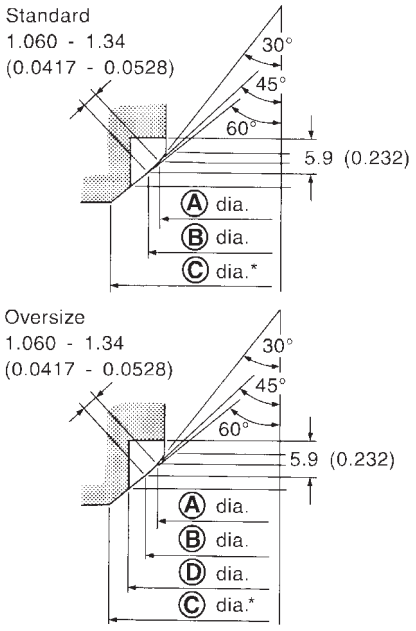

* Cylinder head machining data

SEM573DA

EXHAUST

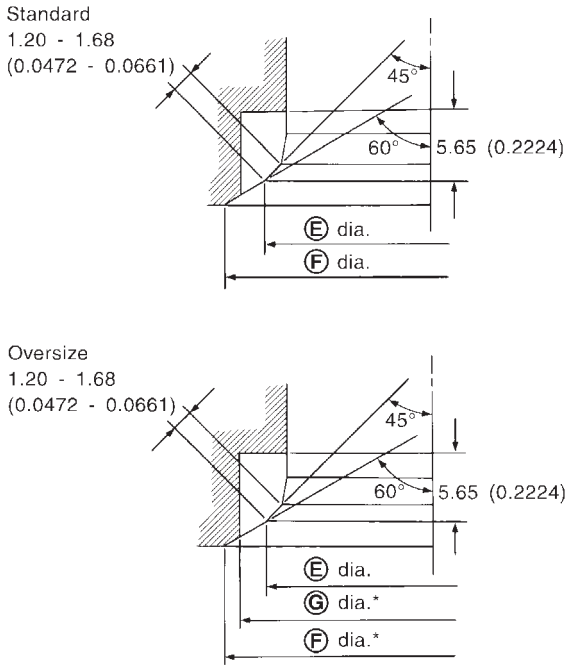

* Cylinder head machining data

SEM685G

Dia.	QG15DE	QG18DE
A	26.8 - 27.0 (1.055 - 1.063)	27.8 - 28.0 (1.094 - 1.102)
B	28.5 - 28.7 (1.122 - 1.130)	29.5 - 29.7 (1.161 - 1.169)
C	30.2 - 30.4 (1.189 - 1.197)	31.9 - 32.1 (1.256 - 1.264)
D	30.500 - 30.516 (1.2008 - 1.2014)	31.500 - 31.516 (1.2402 - 1.2408)
E	23.5 - 23.7 (0.925 - 0.933)	24.5 - 24.7 (0.9646 - 0.9724)
F	25.2 - 25.4 (0.992 - 1.000)	26.2 - 26.4 (1.031 - 1.039)
G	25.500 - 25.516 (1.0039 - 1.0046)	26.500 - 26.516 (1.043 - 1.0439)

VALVE SEAT RESURFACE LIMIT

NJEM0031S08

Unit: mm (in)

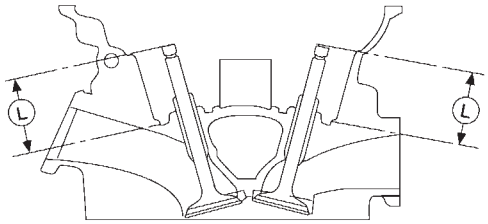

AEM343

Depth (L)	Intake	35.95 - 36.55 (1.4154 - 1.4390)
	Exhaust	35.92 - 36.52 (1.4142 - 1.4378)

Camshaft and Camshaft Bearing

NJEM0032

Unit: mm (in)

Engine model		QG18DE with intake valve timing control	Except for QG18DE with intake valve timing control
Cam height "A"	Intake	40.610 - 40.800 (1.5988 - 1.6063)	39.880 - 40.070 (1.5701 - 1.5776)
	Exhaust	40.056 - 40.246 (1.5770 - 1.5845)	
Cam wear limit		0.20 (0.0079)	

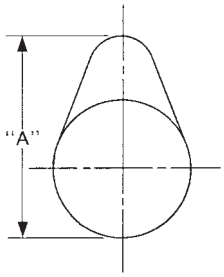

EM671

		Standard	Limit
Camshaft journal to bearing clearance		0.045 - 0.086 (0.0018 - 0.0034)	0.15 (0.0059)
Inner diameter of camshaft bearing	No. 1	28.000 - 28.021 (1.1024 - 1.1032)	—
	No. 2 to No. 5	24.000 - 24.021 (0.9449 - 0.9457)	
Outer diameter of camshaft journal	No. 1	27.935 - 27.955 (1.0998 - 1.1006)	—
	No. 2 to No. 5	23.935 - 23.955 (0.9423 - 0.9431)	
Camshaft runout [TIR*]		Less than 0.02 (0.0008)	0.1 (0.004)
Camshaft end play		0.115 - 0.188 (0.0045 - 0.0074)	0.20 (0.0079)

*Total indicator reading

Cylinder Block

NJEM0033
Unit: mm (in)

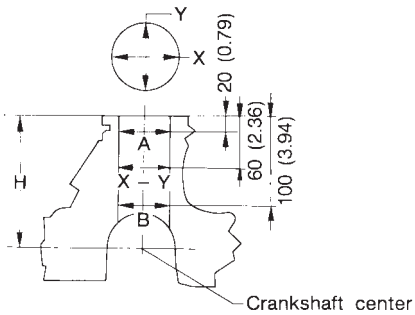

SEM171D

			QG15DE	QG18DE	Limit
			Standard		
Surface flatness			Less than 0.03 (0.0012)		0.1 (0.004)
Height “H” (nominal)			213.95 - 214.05 (8.4232 - 8.4271)		—
Cylinder bore inner diameter	Standard	Grade No. 1	73.600 - 73.610 (2.8976 - 2.8976)	80.000 - 80.010 (3.1496 - 3.1500)	0.2 (0.008)
		Grade No. 2	73.610 - 73.620 (2.8980 - 2.8984)	80.010 - 80.020 (3.1500 - 3.1504)	
		Grade No. 3	73.620 - 73.630 (2.8984 - 2.8988)	80.020 - 80.030 (3.1504 - 3.1508)	
Out-of-round (X − Y)			Less than 0.015 (0.0006)		—
Taper (A − B)			Less than 0.01 (0.0004)		—
Difference in inner diameter between cylinders			0.05 (0.0020)		0.2 (0.008)

Piston, Piston Ring and Piston Pin

=NJEM0034

PISTON

NJEM0034S01

Unit: mm (in)

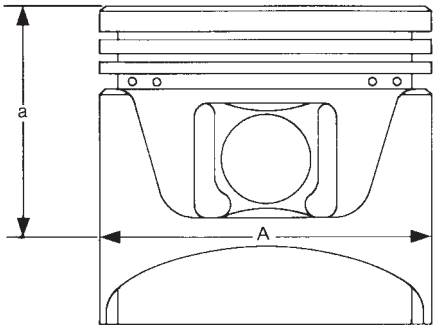

SEM882E

			QG15DE	QG18DE
Piston skirt diameter "A"	Standard	Grade No. 1	73.575 - 73.585 (2.8966 - 2.8970)	79.965 - 79.975 (3.1482 - 3.1486)
		Grade No. 2	73.585 - 73.595 (2.8970 - 2.8974)	79.975 - 79.985 (3.1486 - 3.1490)
		Grade No. 3	73.595 - 73.605 (2.8974 - 2.8978)	79.985 - 79.995 (3.1490 - 3.1494)
0.5 (0.002) oversize (service)			74.075 - 74.105 (2.9163 - 2.9175)	80.215 - 80.245 (3.1581 - 3.1592)*1
1.0 (0.039) oversize (service)			74.575 - 74.605 (2.9360 - 2.9372)	80.465 - 80.495 (3.1679 - 3.1691)*2
"a" dimension			43.5 (1.713)	42.3 (1.665)
Piston pin hole inner diameter			18.987 - 18.999 (0.7475 - 0.7080)	18.993 - 19.005 (0.7478 - 0.7482)
Piston to bore clearance			0.015 - 0.035 (0.0006 - 0.0014)	0.025 - 0.045 (0.0010 - 0.0018)

*1: 0.25 (0.0098) oversize (service)
*2: 0.5 (0.002) oversize (service)

PISTON RING

NJEM0034S02

Unit: mm (in)

		QG15DE	QG18DE	Limit
		Standard		
Side clearance	Top	0.045 - 0.080 (0.0018 - 0.0031)	0.040 - 0.080 (0.0016 - 0.0031)	0.110 (0.0043)
	2nd	0.030 - 0.070 (0.0012 - 0.0028)		0.100 (0.0039)
	Oil	0.065 - 0.135 (0.0026 - 0.0053)	0.045 - 0.155 (0.0018 - 0.0061)	—
End gap	Top	0.20 - 0.30 (0.0079 - 0.0118)		0.53 (0.0209)
	2nd	0.32 - 0.47 (0.0126 - 0.0185)		0.67 (0.0264)
	Oil	0.20 - 0.60 (0.0079 - 0.0236)		0.95 (0.0374)

PISTON PIN

NJEM0034S03

Unit: mm (in)

		QG15DE	QG18DE
Piston pin outer diameter		18.989 - 19.001 (0.7476 - 0.7481)	
Piston pin to piston clearance		−0.004 to 0 (−0.0002 to 0)	0.002 - 0.006 (0.0001 - 0.0002)
Piston pin to connecting rod bushing clearance	Standard	0.005 - 0.017 (0.0002 - 0.0007)	
	Limit	0.023 (0.0009)	

Connecting Rod

NJEM0035

Unit: mm (in)

Center distance		140.45 - 140.55 (5.5295 - 5.5335)
Bend limit [per 100 (3.94)]		0.15 (0.0059)
Torsion limit [per 100 (3.94)]		0.3 (0.012)
Connecting rod bushing inner diameter* (small end)		19.000 - 19.012 (0.7480 - 0.7485)
Connecting rod big end inner diameter		43.000 - 43.013 (1.6929 - 1.6934)
Side clearance	Standard	0.200 - 0.470 (0.0079 - 0.0185)
	Limit	0.5 (0.020)

*After installing in connecting rod

Crankshaft

NJEM0036

Unit: mm (in)

Main journal dia. “Dm”	Grade No. 0	49.956 - 49.964 (1.9668 - 1.9671)
	Grade No. 1	49.948 - 49.956 (1.9665 - 1.9668)
	Grade No. 2	49.940 - 49.948 (1.9661 - 1.9665)
Pin journal dia. “Dp”	Grade No. 0	39.968 - 39.974 (1.5735 - 1.5738)
	Grade No. 1	39.962 - 39.968 (1.5733 - 1.5735)
	Grade No. 2	39.956 - 39.962 (1.5731 - 1.5733)
Center distance “r”		43.95 - 44.05 (1.7303 - 1.7342)
Out-of-round (X − Y)	Standard	Less than 0.003 (0.0001)
	Limit	Less than 0.005 (0.0002)
Taper (A − B)	Standard	Less than 0.004 (0.0002)
	Limit	Less than 0.005 (0.0002)
Runout [TIR*]	Standard	Less than 0.04 (0.0016)
	Limit	Less than 0.05 (0.0020)
Free end play	Standard	0.060 - 0.220 (0.0024 - 0.0087)
	Limit	0.3 (0.012)

*: Total indicator reading

Main Bearing

NJEM0037

STANDARD

NJEM0037S01

Grade No.	Thickness “T” mm (in)	Identification color
0	1.826 - 1.830 (0.0719 - 0.0720)	Black
1	1.830 - 1.834 (0.0720 - 0.0722)	Brown or Red
2	1.834 - 1.838 (0.0722 - 0.0724)	Green
3	1.838 - 1.842 (0.0724 - 0.0725)	Yellow
4	1.842 - 1.846 (0.0725 - 0.0727)	Blue

UNDERSIZE

NJEM0037S02

Unit: mm (in)

	Thickness “T”
0.25 (0.0098)	1.960 - 1.964 (0.0772 - 0.0773)
0.50 (0.0197)	2.085 - 2.089 (0.0821 - 0.0822)

Connecting Rod Bearing

NJEM0038

STANDARD SIZE

NJEM0038S01

Unit: mm (in)

Grade No.	Thickness	Identification color or number
0	1.503 - 1.506 (0.0592 - 0.0593)	—
1	1.506 - 1.509 (0.0593 - 0.0594)	Brown
2	1.509 - 1.512 (0.0594 - 0.0595)	Green

UNDERSIZE

NJEM0038S02

Unit: mm (in)

Grade No.	Thickness	Identification color or number
0.08 (0.0031)	1.542 - 1.546 (0.0607 - 0.0609)	—
0.12 (0.0047)	1.562 - 1.566 (0.0615 - 0.0617)	—
0.25 (0.0098)	1.627 - 1.631 (0.0641 - 0.0642)	—

Bearing Clearance

NJEM0039

Unit: mm (in)

Main bearing clearance	Standard	0.020 - 0.044 (0.0008 - 0.0017)
	Limit	0.1 (0.004)
Connecting rod bearing clearance	Standard	0.014 - 0.039 (0.0006 - 0.0015)
	Limit	0.1 (0.004)

Miscellaneous Components

NJEM0040

Unit: mm (in)

Flywheel runout [TIR*]	Less than 0.15 (0.0059)
Drive plate runout [TIR*]	Less than 0.2 (0.008)
Camshaft sprocket runout [TIR*]	Less than 0.15 (0.0059)

*: Total indicator reading

Parts Requiring Angular Tightening

NJEM0047

- Use an angle wrench for the final tightening of the following engine parts:

a) Cylinder head bolts
b) Main bearing cap bolts
c) Connecting rod cap nuts
d) Crankshaft pulley bolt

- Do not use a torque value for final tightening.
- The torque value for these parts are for a preliminary step.
- Ensure thread and seat surfaces are clean and coated with engine oil.

Liquid Gasket Application Procedure

NJEM0048

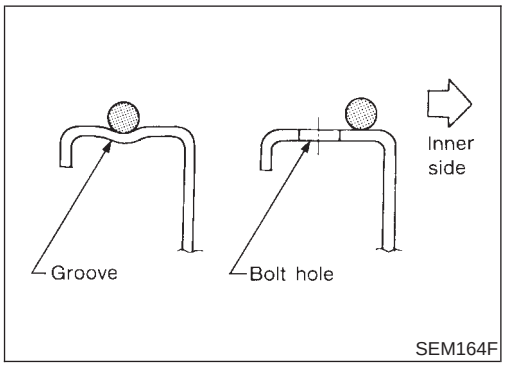

1. **Use a scraper to remove all traces of old liquid gasket from mating surfaces and grooves. Also, completely clean any oil from these areas.**
2. **Apply a continuous bead of liquid gasket to mating surfaces. (Use Genuine Liquid Gasket or equivalent.)**

- Be sure liquid gasket diameter is as specified.

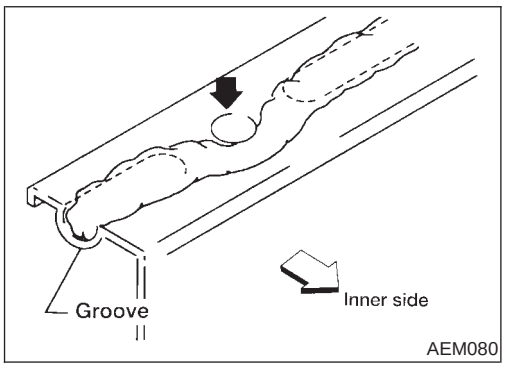

3. **Apply liquid gasket around the inner side of bolt holes (unless otherwise specified).**
4. **Assembly should be done within 5 minutes after coating.**
5. **Wait at least 30 minutes before refilling engine oil and engine coolant.**

Special Service Tools

NJEM0049

Tool number Tool name	Description	
ST0501S000 Engine stand assembly 1 ST05011000 Engine stand 2 ST05012000 Base	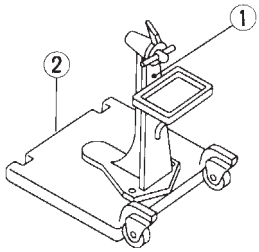 NT042	Disassembling and assembling
KV10106500 Engine stand shaft	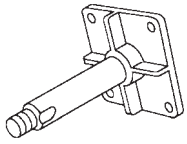 NT028	
KV11105900 Engine sub-attachment	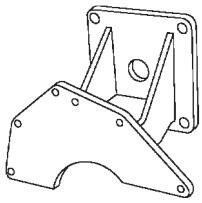 NT799	KV10115900 has been replaced with KV10106500.
KV10115600 Valve oil seal drift	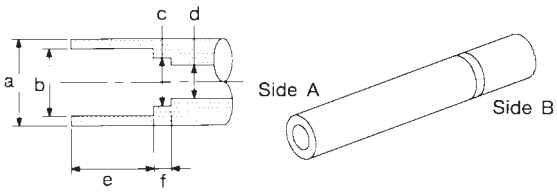 NT603	Installing valve oil seal **Use side A.** **Side A** **a: 20 (0.79) dia.** **b: 13 (0.51) dia.** **c: 10.3 (0.406) dia.** **d: 8 (0.31) dia.** **e: 10.7 (0.421)** **f: 5 (0.20)** Unit: mm (in)
KV10107902 Valve oil seal puller 1 KV10116100 Valve oil seal puller adapter	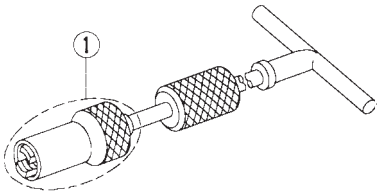 NT605	Removing valve oil seal
KV11103000 Injection pump drive gear puller	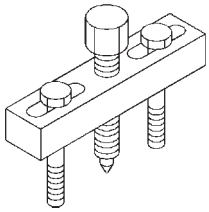 NT676	

Tool number Tool name	Description	
KV101056S0 Ring gear stopper 1 KV10105630 Adapter 2 KV10105610 Plate	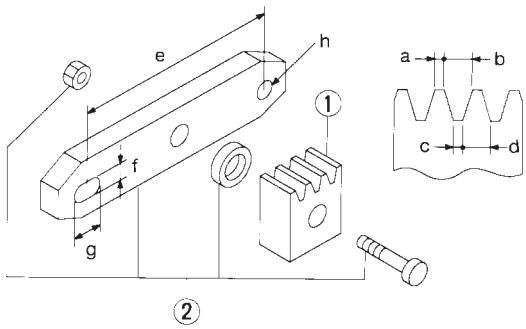 NT617	Preventing crankshaft from rotating **a: 3 (0.12)** **b: 6.4 (0.252)** **c: 2.8 (0.110)** **d: 6.6 (0.260)** **e: 107 (4.21)** **f: 14 (0.55)** **g: 20 (0.79)** **h: 14 (0.55) dia.** Unit: mm (in)
KV101151S0 Lifter stopper set 1 KV10115110 Camshaft pliers 2 KV10115120 Lifter stopper	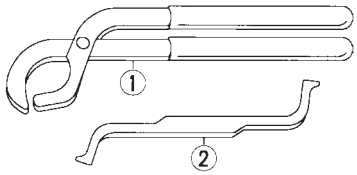 NT041	Changing shims
ST16610001 Pilot bushing puller	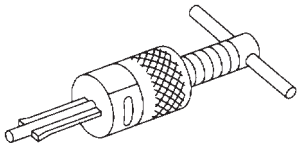 NT045	Removing crankshaft pilot bushing
KV10111100 Seal cutter	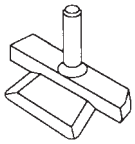 NT046	Removing steel oil pan and rear timing chain case
WS39930000 Tube presser	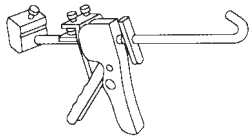 NT052	Pressing the tube of liquid gasket
KV10112100 Angle wrench	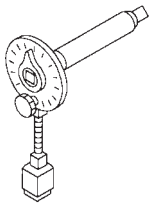 NT014	Tightening bolts for bearing cap, cylinder head, etc.
KV10109300 Pulley holder	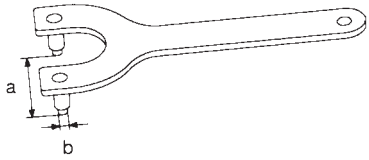 NT628	**a: 68 mm (2.68 in)** **b: 8 mm (0.31 in) dia.**

Tool number Tool name	Description	
KV11106010 Hexagon wrench	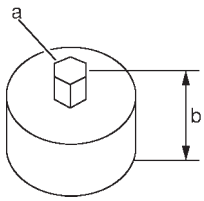 NT801	**a: 5 mm (Face to face)** **b: 20 mm**
KV11106020 Hexagon wrench	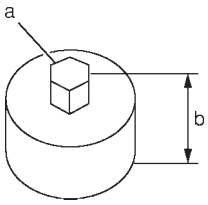 NT803	**a: 6 mm (Face to face)** **b: 20 mm**
KV11106030 Positioning stopper pin	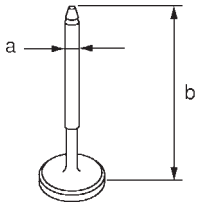 NT804	**a: 6 mm dia.** **b: 80 mm**
KV11106040 TORX wrench	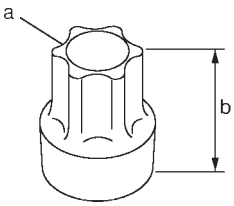 NT805	**a: T70** **b: 26 mm**

Commercial Service Tools

NJEM0050

Tool name	Description	
Valve seat cutter set	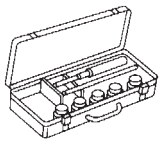 NT048	Finishing valve seat dimensions
Piston ring compressor	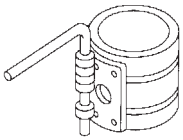 NT044	Installing piston assembly into cylinder bore
Piston ring expander	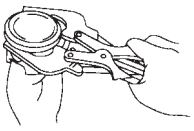 NT030	Removing and installing piston ring

Tool name	Description
TORX socket	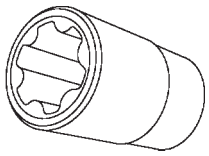 NT807
Standard Universal	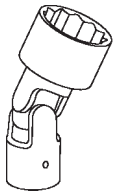 NT808

NVH Troubleshooting — Engine Noise

NJEM0051S01

Use the chart below to help you find the cause of the symptom.

1. Locate the area where noise occurs.
2. Confirm the type of noise.
3. Specify the operating condition of engine.
4. Check specified noise source.

If necessary, repair or replace these parts.

Location of noise	Type of noise	Operating condition of engine						Source of noise	Check item	Reference page
		Before warm-up	After warm-up	When starting	When idling	When racing	While driving			
Top of engine Rocker cover Cylinder head	Ticking or clicking	C	A	—	A	B	—	Tappet noise	● Valve clearance	EM-134
	Rattle	C	A	—	A	B	C	Camshaft bearing noise	● Camshaft journal clearance ● Camshaft runout	EM-123, 123
Crankshaft pulley Cylinder block (Side of engine) Oil pan	Slap or knock	—	A	—	B	B	—	Piston pin noise	● Piston and piston pin clearance ● Connecting rod bushing clearance	EM-145, 153
	Slap or rap	A	—	—	B	B	A	Piston slap noise	● Piston-to-bore clearance ● Piston ring side clearance ● Piston ring end gap ● Connecting rod bend and torsion	EM-145, 145, 146, 147
	Knock	A	B	C	B	B	B	Connecting rod bearing noise	● Connecting rod bushing clearance (Small end) ● Connecting rod bearing clearance (Big end)	EM-153, 151
	Knock	A	B	—	A	B	C	Main bearing noise	● Main bearing oil clearance ● Crankshaft runout	EM-148, 149
Front of engine Timing chain cover	Tapping or ticking	A	A	—	B	B	B	Timing chain and chain tensioner noise	● Timing chain cracks and wear ● Timing chain tensioner operation	EM-96, 94
Front of engine	Squeaking or fizzing	A	B	—	B	—	C	Other drive belts (Sticking or slipping)	● Drive belts deflection	EM-85
	Creaking	A	B	A	B	A	B	Other drive belts (Slipping)	● Idler pulley bearing operation	
	Squall Creak	A	B	—	B	A	B	Water pump noise	● Water pump operation	LC-40

A: Closely related B: Related C: Sometimes related —: Not related

MEASUREMENT OF COMPRESSION PRESSURE

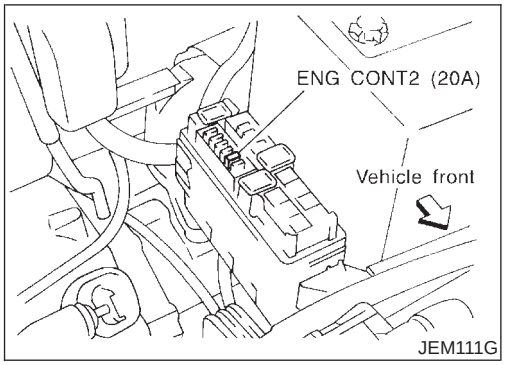

JEM111G

1. Warm up engine.
2. Turn ignition switch OFF.
3. Using CONSULT-II, make sure no error codes are indicated for self-diagnosis items. Refer to EC-10, “Trouble Diagnosis — INDEX”.

- Do not disconnect CONSULT-II until the end of this operation; it will be used to check engine rpm and for error detection at the end of this operation.

4. Disconnect the negative battery terminal.
5. To prevent fuel from being injected during inspection, remove fuel injection pump fuse [ENG CONT2 (20A)] from fuse box on the left side of engine compartment.
6. Remove glow plugs from all the cylinders.

- **Before removal, clean the surrounding area to prevent entry of any foreign materials into the engine.**
- **Carefully remove glow plugs to prevent any damage or breakage.**
- **Handle with care to avoid applying any shock to glow plugs.**

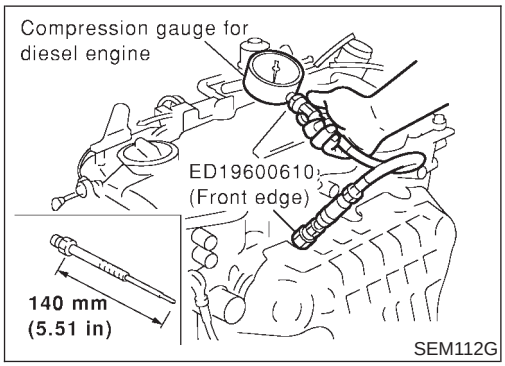

SEM112G

7. Install adapter (SST) to installation holes of glow plugs and connect compression gauge for diesel engine.

   : 18 - 21 N·m (1.8 - 2.2 kg-m, 13 - 15 ft-lb)
8. Connect battery negative terminal.
9. Set the ignition switch to “START” and crank. When gauge pointer stabilizes, read compression pressure and engine rpm. Repeat the above steps for each cylinder.

- **Always use a fully-charged battery to obtain specified engine speed.**

Unit: kPa (bar, kg/cm^2, psi)/rpm

Standard	Minimum	Difference limit between cylinders
3,138 (31.38, 32.0, 455)/200	2,452 (24.52, 25.0, 356)/200	490 (4.90, 5.0, 71)/200

- When engine rpm is out of the specified range, check the specific gravity of battery liquid. Measure again under corrected conditions.
- If engine rpm exceeds the limit, check valve clearance and combustion chamber components (valves, valve seats, cylinder head gaskets, piston rings, pistons, cylinder bores, cylinder block upper and lower surfaces) and measure again.

10. Complete this operation as follows:

a. Turn the ignition switch to “OFF”.
b. Disconnect battery negative terminal.
c. Install glow plugs.

d. Install fuel injection pump fuse [ENG CONT2 (20A)].
e. Connect battery negative terminal.
f. Using CONSULT-II make sure no error code is indicated for items of self- diagnosis. Refer to EC-10, “Trouble Diagnosis — INDEX”.

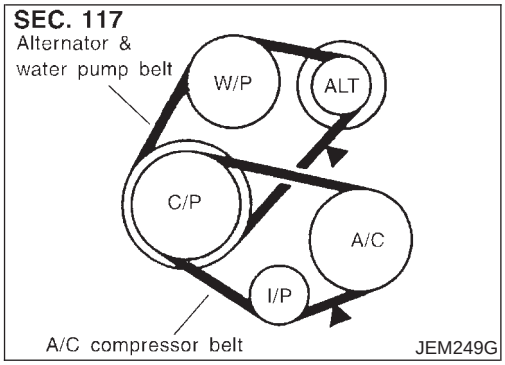

Inspection

NJEM0088

- Before inspecting the engine, make sure the engine has cooled down; wait approximately 30 minutes after the engine has been stopped.
- Visually inspect all belts for wear, damage, or cracks on contacting surfaces and edge areas.
- When measuring deflection, apply 98 N (10 kg, 22 lb) at the ▼ marked point.
- **When checking belt deflection immediately after installation, first adjust it to the specified value. Then, after turning the crankshaft two turns or more, re-adjust to the specified value to avoid variation in deflection between pulleys.**
- **Tighten idler pulley lock nut by hand and measure deflection without looseness.**

Belt Deflection:

Applied belt	Belt specification	Belt deflection with 98 N (10 kg, 22 lb) force applied* mm (in)		
		New	Adjusted	Limit for re-tightening
Air conditioner compressor belt	HA type low edge belt	4 - 5 (0.16 - 0.20)	6 - 7 (0.24 - 0.28)	8.5 (0.335)
Alternator & water pump belt	HA type low-edge wide angle belt	9.0 - 10.5 (0.354 - 0.413)	11.0 - 12.5 (0.433 - 0.492)	16.5 (0.650)

*: When engine is cold.

Adjustment

NJEM0089

- Adjust belts with the parts shown below.

Applied belt	Belt tightening method for adjustment
Air conditioner compressor belt	Adjusting bolt on idler pulley
Alternator water pump belt	Adjusting bolt on alternator

CAUTION:

- **When a new belt is installed as a replacement, adjust it to the value specified under "New" accommodations because of insufficient adaptability with pulley grooves.**

- **If the belt deflection of the current belt is out of the "Limit for re-tightening", adjust to the "Adjusted value".**
- **When checking belt deflection immediately after installation, first adjust it to the specified value. Then, after turning crankshaft two turns or more, re-adjust it to the specified value to avoid variation in deflection between pulleys.**
- **Make sure the belts are fully fitted into the pulley grooves during installation.**
- **Handle with care to avoid smearing the belts with oil or cooling water etc.**
- **Do not twist or bend the belts with strong force.**

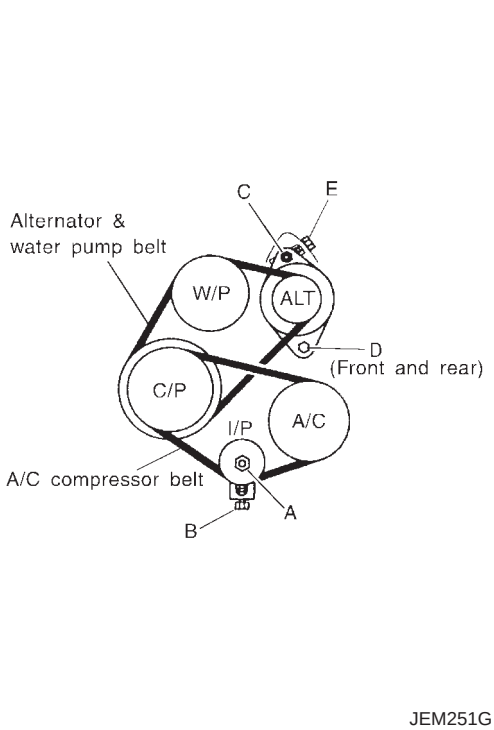

JEM251G

AIR CONDITIONER COMPRESSOR BELT

NJEM0089S01

1. Remove RH splash cover (with undercover attached).
2. Loosen idler pulley lock nut (A).
3. Turn adjusting bolt (B) to adjust.
- Refer to EM-85, "Inspection" for adjustment values.
4. Tighten lock nut (A).

Nut A:

: 31 - 39 N·m (3.1 - 4.0 kg-m, 23 - 28 ft-lb)

ALTERNATOR & WATER PUMP BELT

NJEM0089S02

1. Loosen adjuster lock nut (C).
2. Loosen alternator fixing bolts (D) (each on front and rear).
3. Turn adjusting bolt (E) to adjust.
- Refer to EM-85, "Inspection" for adjustment values.
4. Tighten nut (C) and bolt (D) in this order.

Nut C:

: 19 - 24 N·m (1.9 - 2.5 kg-m, 14 - 18 ft-lb)

Bolt D:

: 44 - 57 N·m (4.4 - 5.9 kg-m, 32 - 42 ft-lb)

Removal

NJEM0090

1. Loosen each belt. Refer to EM-85, "Adjustment".
2. Remove air conditioner compressor belt.
3. Remove alternator & water pump belt.

Installation

NJEM0091

1. Install each belt on pulley in reverse order of removal.
2. Adjust belt tension. Refer to EM-85, “Adjustment”.
3. Tighten nuts and bolts provided for adjustment to the specified torque.
4. Check again that each belt tension is as specified.

Changing Air Cleaner Filter

NJEM0092

VISCOUS PAPER TYPE

NJEM0092S01

The viscous paper type filter does not need cleaning.

Components

NJEM0054

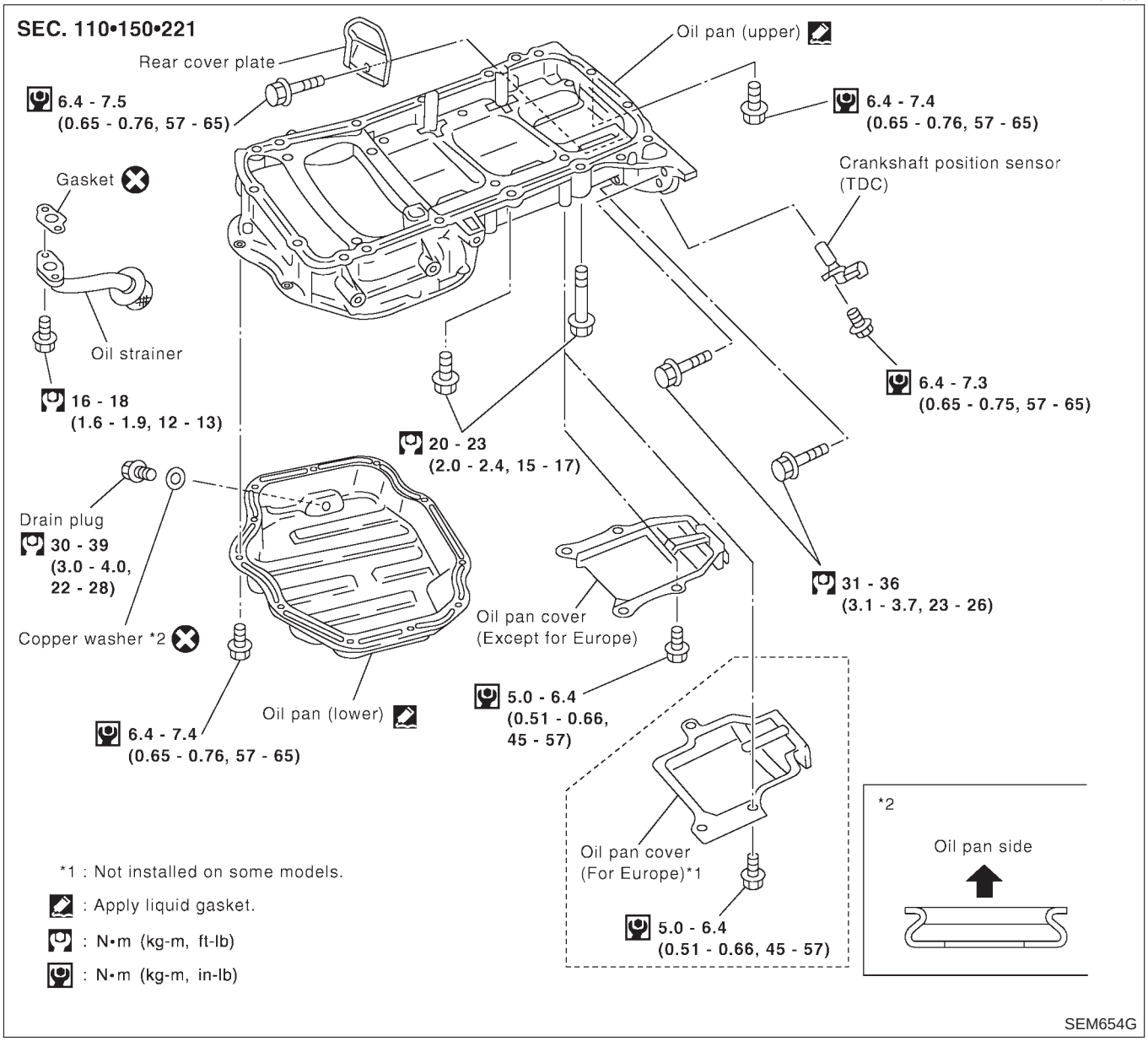

Removal

NJEM0055

CAUTION:

When removing the upper oil pan from engine, first remove the crankshaft position sensor (TDC sensor) from the assembly.

Be careful not to damage sensor edges and signal plate teeth.

1. Remove right engine undercover.
2. Drain engine oil.

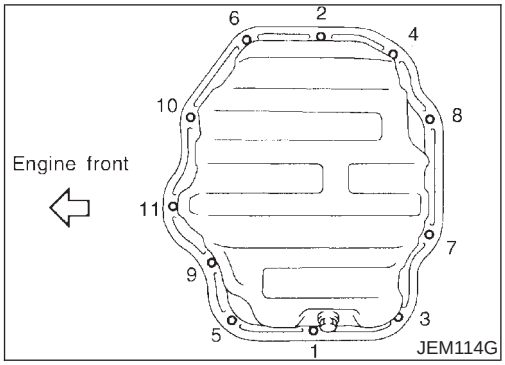

3. Remove air compressor bracket.
4. Remove lower oil pan bolts.
- Loosen bolts in the reverse order of that shown in the figure.

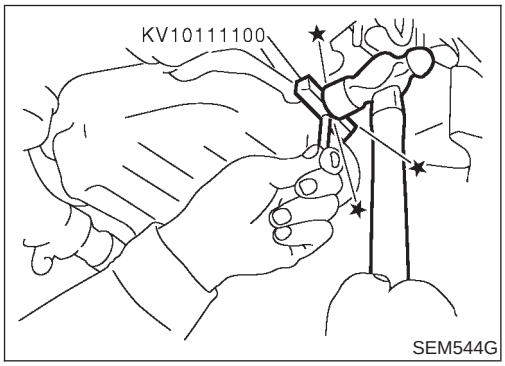

5. Remove lower oil pan.

a. Insert Tool between upper oil pan and lower oil pan.

- **Be careful not to damage aluminum mating surface.**
- **Do not insert screwdriver, or oil pan flange will be deformed.**

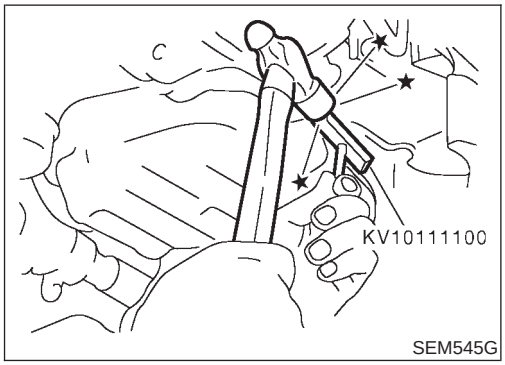

b. Slide Tool by tapping on the side of the Tool with a hammer.

c. Remove lower oil pan.

6. Remove oil strainer.
7. Remove front exhaust tube and its support.
   Refer to FE-32, "Removal and Installation".

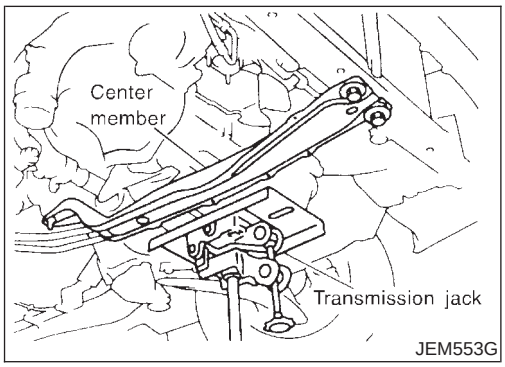

8. Set a suitable transmission jack under transaxle and hoist engine with engine slinger.
- Place the jack as close to the center as possible for support.
9. Remove front and rear engine mounting nuts and bolts.
10. Remove center member.
11. Remove crankshaft position sensor (TDC sensor) from oil pan.
12. Remove oil pan cover.

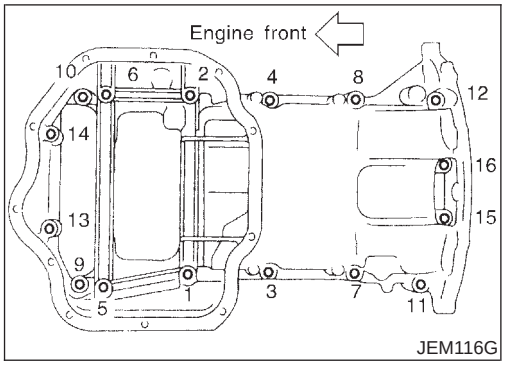

JEM116G

13. For Europe only, remove catalyst rear diffuser, EM-110, "Catalyst".
14. Remove upper oil pan bolts in reverse order.

15. Remove four engine-to-transaxle bolts using a universal socket. (Commercial Service Tool).
16. Remove upper oil pan.

a. Insert an appropriate size tool into the notch of upper oil pan.

- **Be careful not to damage aluminum mating surface.**
- **Do not insert screwdriver, or oil pan flange will be deformed.**

b. Pry off upper oil pan by moving the tool up and down.

c. Remove upper oil pan.

- **Be careful to prevent No. 15 and 16 blots from falling into transaxle case.**

Installation

NJEM0056

1. Install upper oil pan.

a. Use a scraper to remove old liquid gasket from mating surfaces.

- **Also remove old liquid gasket from mating surface of cylinder block, front cover and lower oil pan.**
- **Remove old liquid gasket from the bolt hole and thread.**

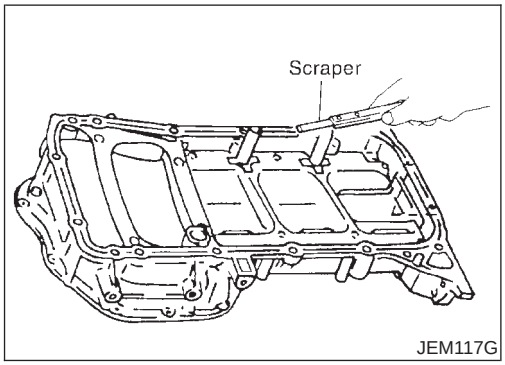

JEM117G

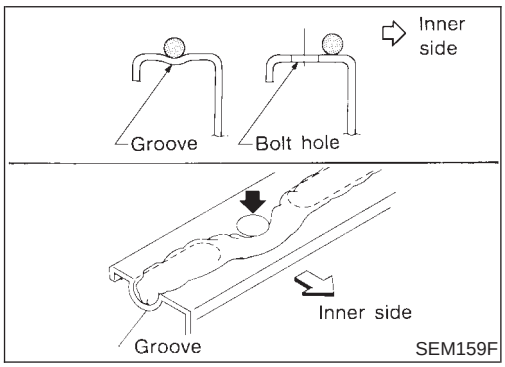

SEM159F

b. Apply a continuous bead of liquid gasket to mating surface of aluminum oil pan.

- **Use Genuine Liquid Gasket or equivalent.**

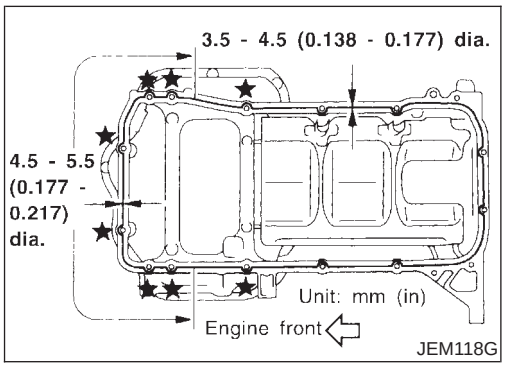

JEM118G

c. Apply Genuine Liquid Gasket or equivalent, to areas shown in the figure.

- **At the 8 bolt holes marked ★, liquid gasket should be applied on the rims of the holes.**
- **Be sure liquid gasket is 3.5 to 4.5 mm (0.138 to 0.177 in) or 4.5 to 5.5 mm (0.177 to 0.217 in) wide. (Be careful that the diameter of the silicon bead is different around the front.)**
- **Attaching should be done within 5 minutes after coating.**

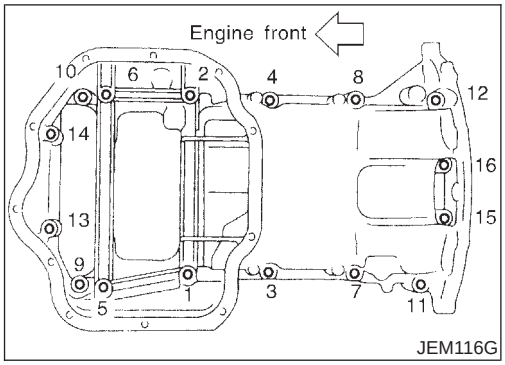

d. Install upper oil pan.
- Tighten bolts in numerical order.
- Bolt dimensions vary depending on the installation location. Refer to the following and use appropriate bolts.

  M6 x 30 mm: Bolt No. 15, 16

  M8 x 25 mm: Bolt No. 3, 4, 9, 10

  M8 x 60 mm: Bolt No. 1, 2, 5, 6, 7, 8, 11, 12, 13, 14
- The shank length under the bolt neck above is the length of the threaded part (pilot portion not included).
- **Wait at least 30 minutes before refilling engine oil.**

2. Install the four engine-to-transaxle bolts. For tightening torque, refer to MT-24, "Installation".
3. Install oil pan cover.
4. Install air compressor bracket.

   : 57 - 65 N·m (5.8 - 6.7 kg-m, 42 - 48 ft-lb)
5. Install drive belts.
6. Install center member.
7. Install front and rear engine mounting insulator nuts and bolts.

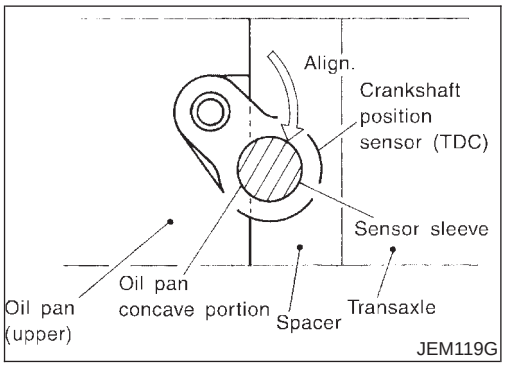

8. Install crankshaft position sensor (TDC sensor).
- Tighten bolt while positioning and setting the side surface of the crankshaft position sensor (TDC sensor) sleeve against the arc of the upper oil pan.
9. Install front exhaust tube and its support.
10. Install oil strainer.

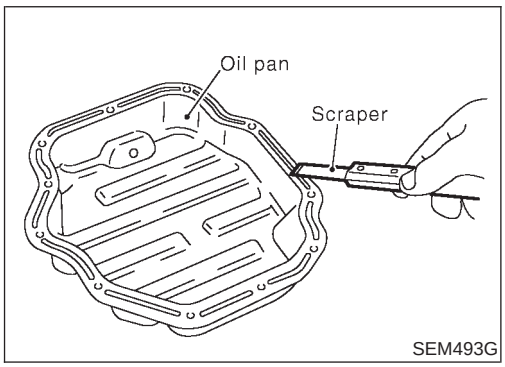

11. Install lower oil pan.

a. Use a scraper to remove old liquid gasket from mating surfaces.
- **Also remove old liquid gasket from mating surface of upper oil pan.**

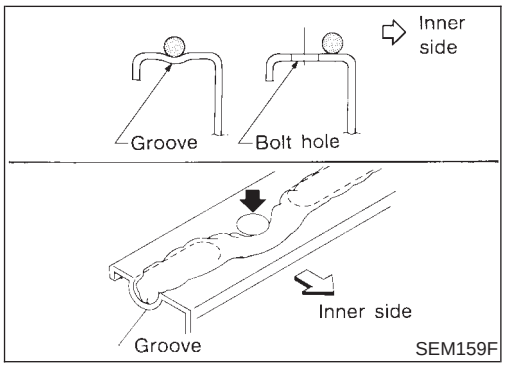

b. Apply a continuous bead of liquid gasket to mating surface of lower oil pan.
- **Use Genuine Liquid Gasket or equivalent.**

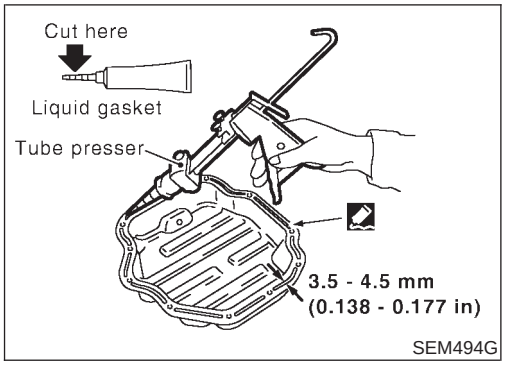

- **Be sure liquid gasket is 3.5 to 4.5 mm (0.138 to 0.177 in) wide.**
- **Attaching should be done within 5 minutes after coating.**

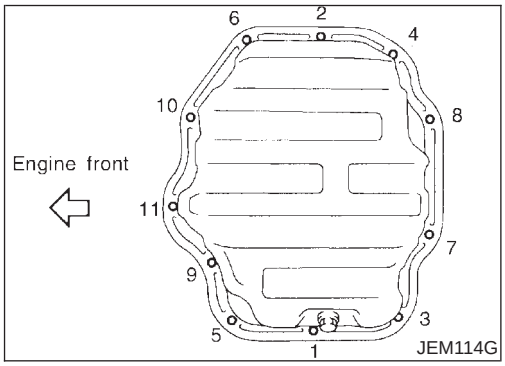

c. Install lower oil pan.

- **Tighten in numerical order shown in the figure.**
- **Wait at least 30 minutes before refilling engine oil.**

Secondary Timing Chain

NJEM0093

CAUTION:

- **After removing timing chain, do not turn crankshaft and camshaft separately, or valves will strike piston heads.**
- **When installing camshafts, chain tensioners, oil seals, or other sliding parts, lubricate contacting surfaces with new engine oil.**
- **Apply new engine oil to bolt threads and seat surfaces when installing camshaft sprockets, crankshaft pulley, and camshaft brackets.**
- **When removing the oil pans, oil pump assembly and timing chain from engine, first remove the crankshaft position sensor (TDC sensor).**
  Be careful not to damage sensor edges.
- **Do not spill engine coolant on drive belts.**

SEC. 130•135

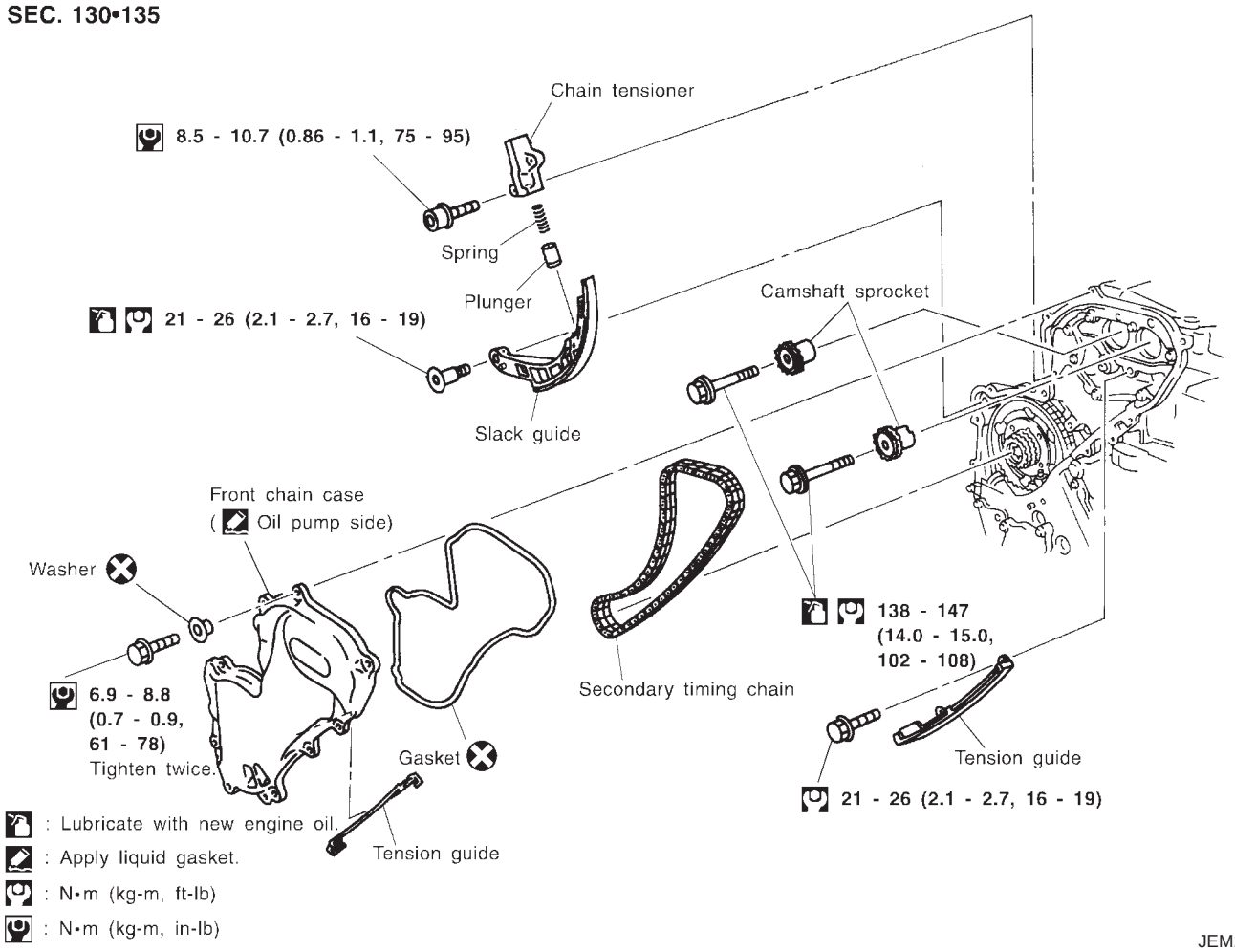

JEM120G

REMOVAL

NJEM0093S01

- For preparative work for removing/installing secondary timing chain to remove/install fuel injection pump, refer to EC-618, “Electronic control fuel injection pump”.
- To prepare for removing/installing secondary timing chain to remove/install camshaft, refer to EM-120, “CAMSHAFT”.

1. Drain engine oil.
2. Drain coolant by removing cylinder block drain plugs. Refer to LC-44, “Changing Engine Coolant”.

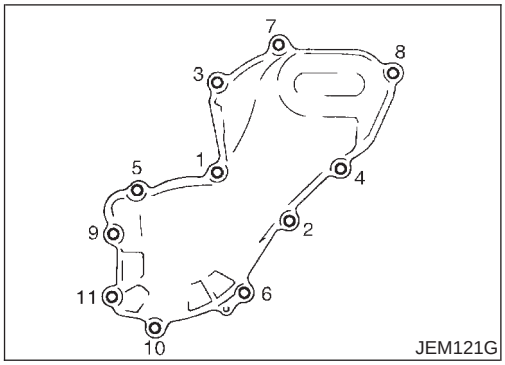

3. Remove front chain case.
- Move power steering fluid reservoir tank from the bracket.
- Loosen fixing bolts in the reverse order of that shown in the figure and remove them.
- Remove No. 6, 10, and 11 bolts with the rubber washer as space is limited for pulling them out.

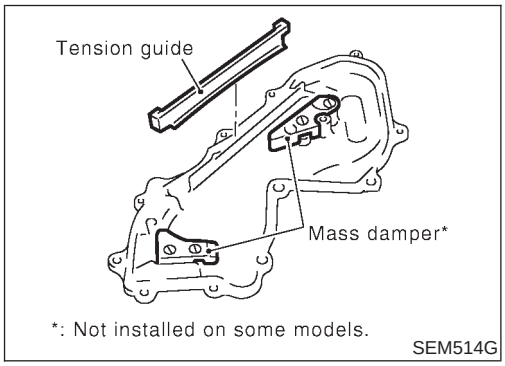

CAUTION:
- **While front chain case is removed, cover openings to prevent entry of foreign material into engine.**
- **Do not remove two mass dampers on the back of cover.**

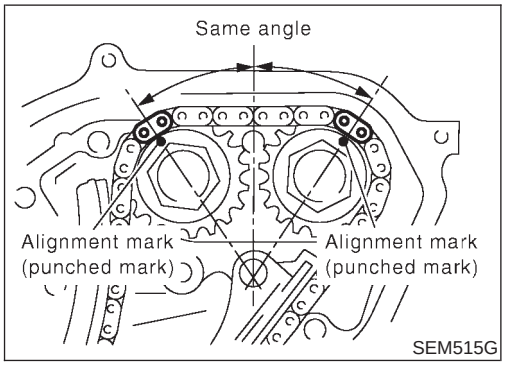

4. Set the No. 1 piston to TDC on its compression stroke.
- Turn crankshaft pulley clockwise so that the alignment mark (punched mark) on each camshaft sprocket is positioned as shown in the figure.
- **No position indicator is provided on the crankshaft pulley.**
- **When installing, color coded links on the secondary timing chain can be used as alignment marks. Marking may not be necessary for removal; however, make alignment marks as required because the alignment mark on fuel injection pump sprocket may not be easy to see.**

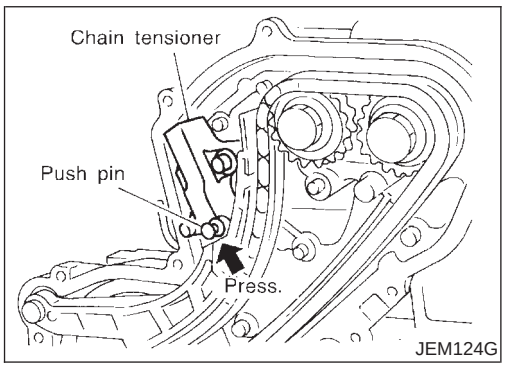

5. Remove chain tensioner.

a. Push the plunger of chain tensioner and keep it pressed with a push pin.

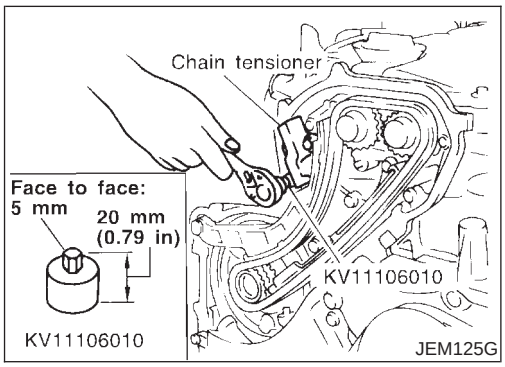

b. Using a hexagon-head wrench (face to face: 5 mm, SST), remove bolts to remove chain tensioner.

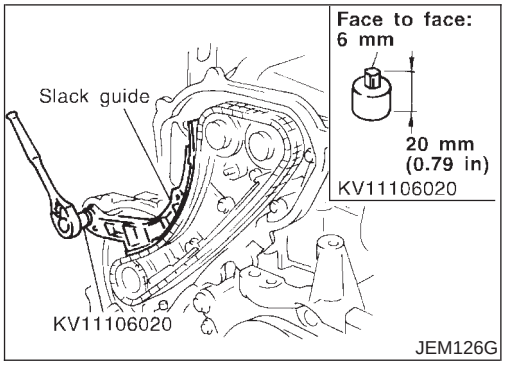

JEM126G

6. Remove timing chain slack guide.
- Using a hexagon-head wrench (face to face: 6 mm, SST), remove bolt to remove timing chain slack guide.

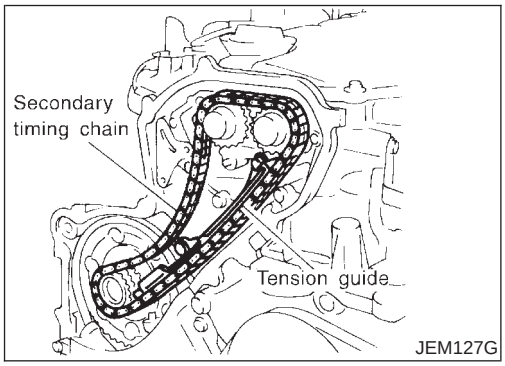

JEM127G

7. Remove timing chain tension guide.
8. Remove secondary timing chain.
- Timing chain alone can be removed without removing sprockets.

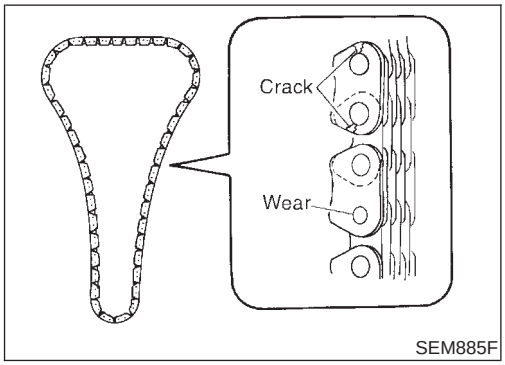

SEM885F

INSPECTION

NJEM0093S02

Check for cracks and excessive wear at roller links. Replace chain if necessary.

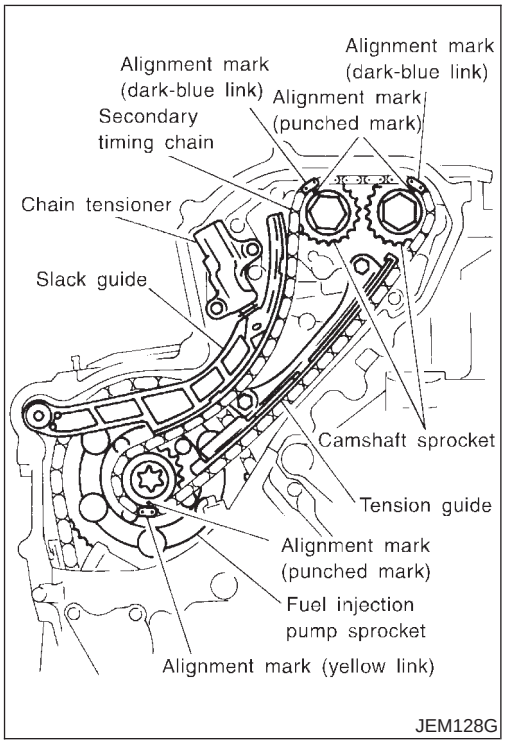

JEM128G

INSTALLATION

NJEM0093S03

1. Install secondary timing chain.
- When installing, match the alignment marks on sprockets with color coded alignment marks (colored links) on the chain.
2. Install timing chain tension guide.
- The upper bolt has a longer shank than the lower bolt.

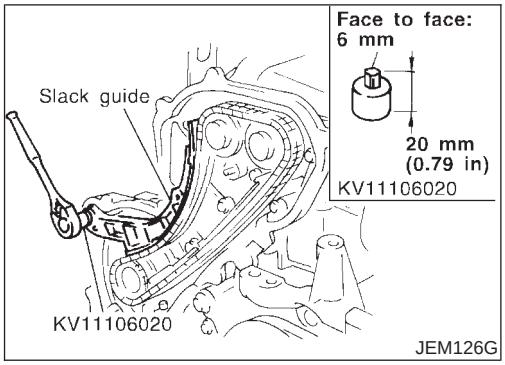

3. Using a hexagon-head wrench (face to face: 6 mm, SST), install timing chain slack guide.

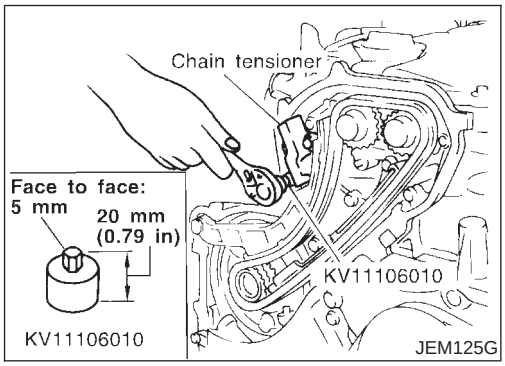

4. Install chain tensioner.
a. Push the plunger of the chain tensioner. While holding it with a push pin, install the chain tensioner.
b. Using a hexagon-head wrench (face to face: 5 mm, SST), tighten bolts.
c. Pull out the push pin, etc. holding the plunger.
- **Check again that the alignment marks on the sprockets and the colored alignment marks on the timing chain are aligned.**

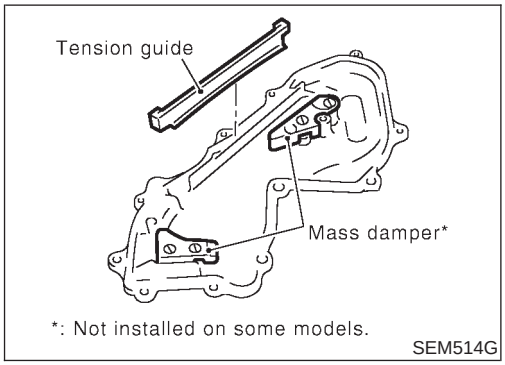

5. Install front chain case.
a. Install tension guide on the back surface of front chain case.
- Hold front chain case vertically when installing. Tension guide may come off if front chain case is tilted.

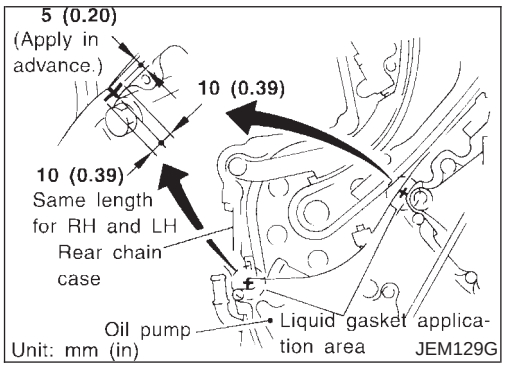

b. Apply specified liquid gasket (Refer to EM-77, "Liquid Gasket Application Procedure".) on both ends of arched area (locations where rear chain case is adjoined) as shown in the figure.
c. Install front chain case.
- When installing, align dowel pin on oil pump case with the pin hole.

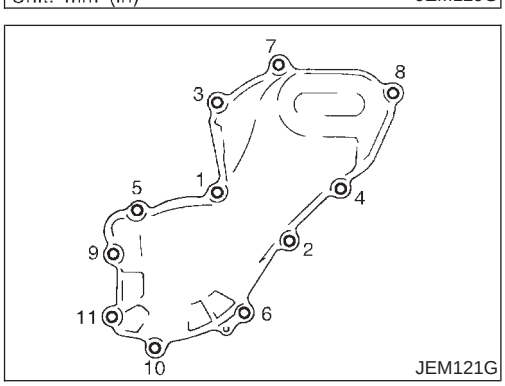

- Install No. 6, 10, and 11 bolts with the rubber washer to the front chain case.
d. Tighten fixing bolts in the numerical order shown in the figure.
e. After tightening all the bolts, re-tighten in the same order.

6. Hereafter, install in the reverse order of removal.

Primary Timing Chain

NJEM0094

SEC. 120•130•135•186•490

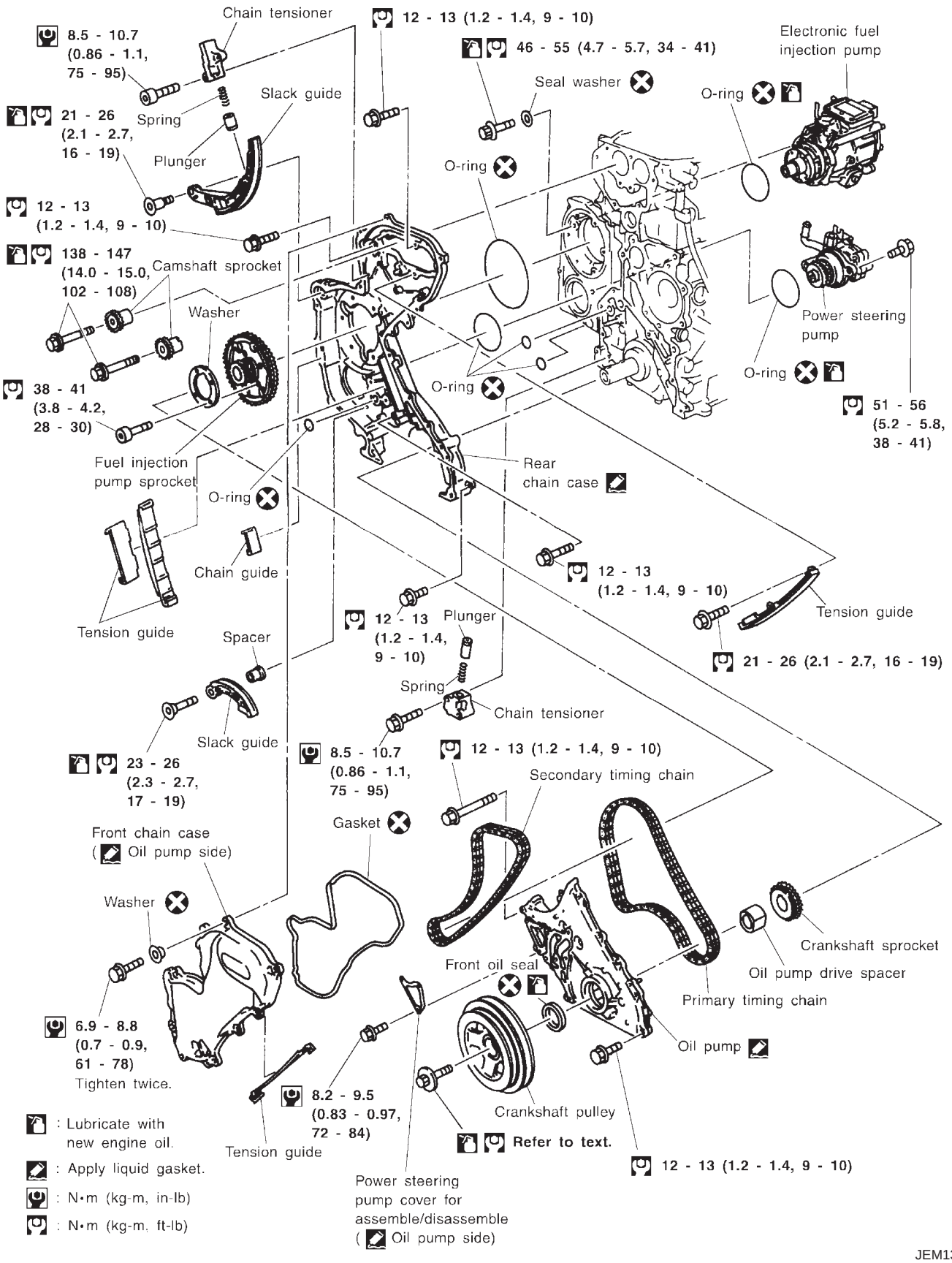

REMOVAL

NJEM0094S01

1. Remove engine and transaxle assembly. Refer to EM-137, "ENGINE ASSEMBLY".
2. Remove transaxle from engine. Place engine onto engine stand (SST). Refer to EM-141, "CYLINDER BLOCK", "Disassembly".
3. Remove the following parts:
- Oil pan (upper and lower)
  Refer to EM-89, "OIL PAN".
- Oil filter bracket
  Refer to LC-32, "Oil Filter Bracket".
- Injection tube
  Refer to EC-614, "Injection Tube and Injection Nozzle".
4. Remove secondary timing chain and associated parts.
   Refer to EM-94, "Secondary Timing Chain".
5. When removing rear chain case, remove camshaft sprockets.
   Refer to EM-120, "CAMSHAFT".

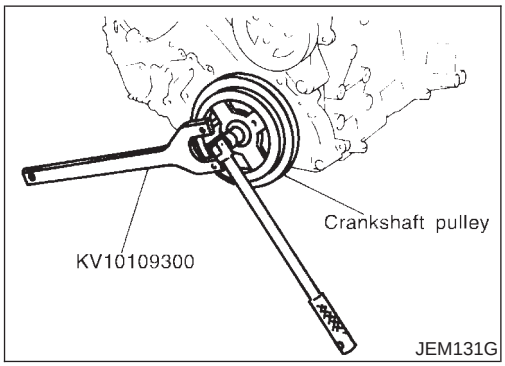

6. Remove crankshaft pulley.

a. Hold crankshaft pulley with the pulley holder (SST).

b. Loosen crankshaft pulley fixing bolt and pull out the bolt approximately 10 mm (0.39 in).

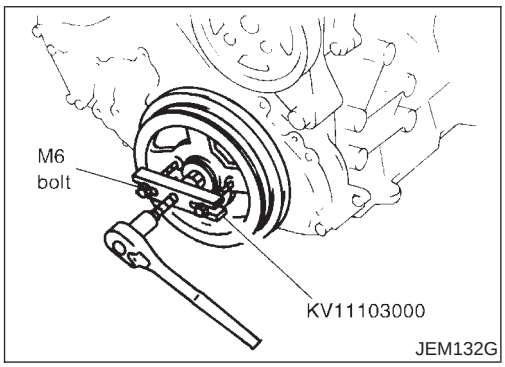

c. Using pulley puller (SST), remove crankshaft pulley.
- Use two M6 bolts with approx. 60 mm (2.36 in) shank length for securing crankshaft pulley.

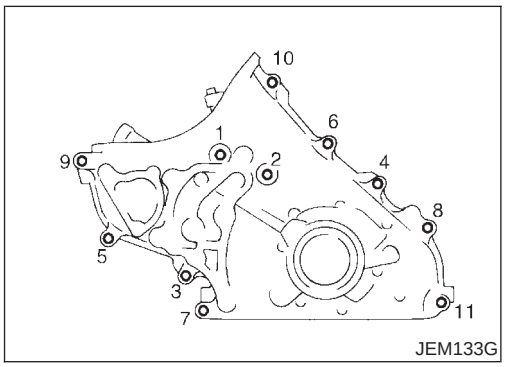

7. Remove oil pump.
- Loosen bolts in the reverse order of that shown in the figure and remove them.
- Use seal cutter (SST) etc. for removal.
8. Remove front oil seal from oil pump.
- Punch out the seal off from the back surface of the oil pump using a flat-bladed screwdriver.
- **Be careful not to damage the oil pump.**

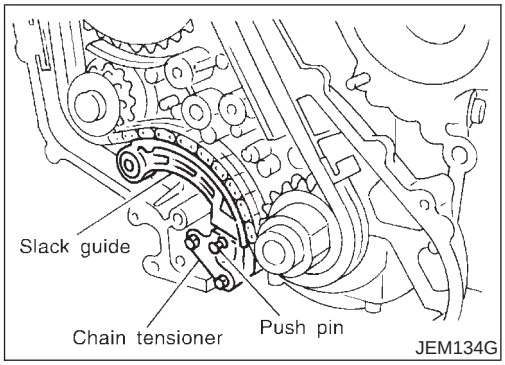

9. Remove chain tensioner.
- When removing chain tensioner, push the sleeve of chain tensioner and keep it pressed with a push pin, etc.

10. Remove timing chain slack guide.

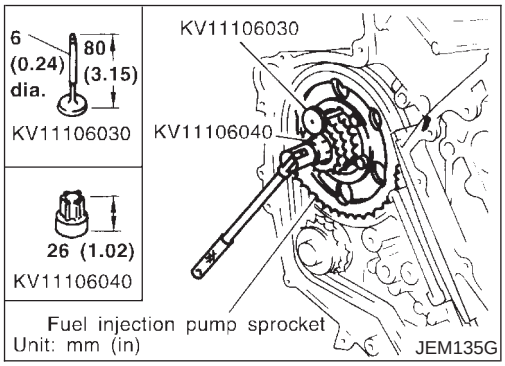

11. Hold fuel injection pump sprocket and remove bolt.

a. Insert positioning stopper pin (SST) into the hole 6 mm (0.24 in) in the diameter on the fuel injection pump sprocket.

b. Using a TORX wrench (SST), turn pump shaft little by little to adjust the position of fuel injection pump sprocket so that the holes align.

c. Push positioning stopper pin (SST) through pump sprocket to fuel injection pump body to hold pump sprocket, and remove bolt.

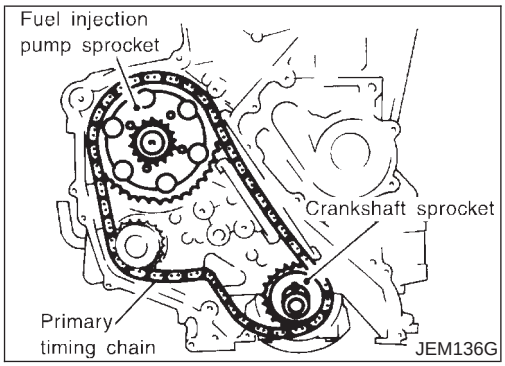

12. Remove primary timing chain with fuel injection pump sprocket and crankshaft sprocket.

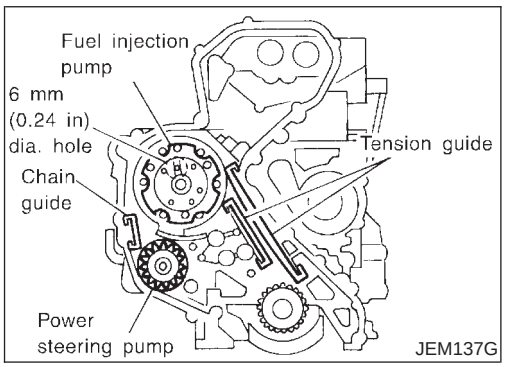

13. Remove chain guide and tension guides.
14. Remove fuel injection pump.
15. Remove power steering pump.

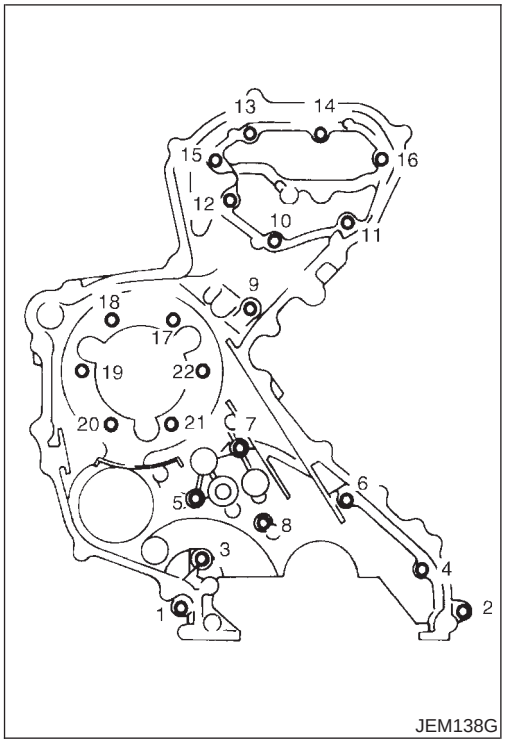

16. Remove rear chain case.
- Loosen fixing bolts in the reverse order of that shown in the figure and remove them.
- Use seal cutter (SST) for removal.

INSPECTION

NJEM0094S02

Check for cracks and excessive wear at roller links. Replace chain if necessary.

INSTALLATION

NJEM0094S03

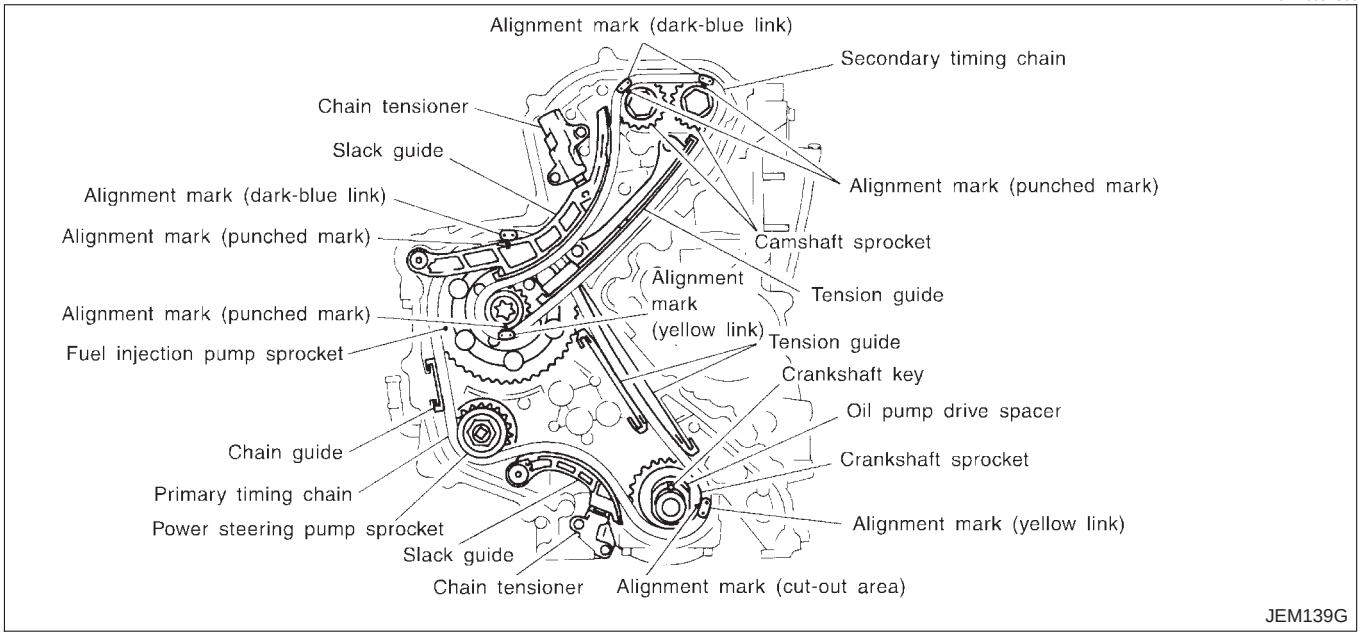

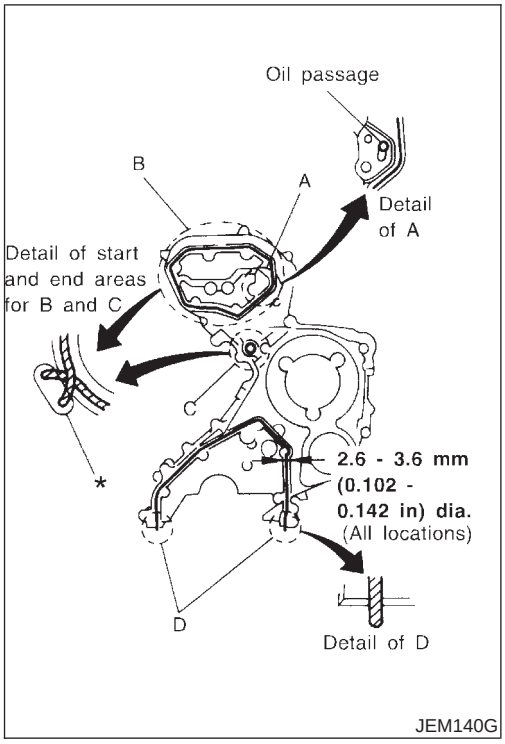

JEM140G

1. Install rear chain case.

a. Apply a continuous bead of specified liquid gasket (Refer to EM-77, "Liquid Gasket Application Procedure".) on locations shown in the figure.
A: Apply bead so that it does not protrude into the oil passage.
B, C: Minimize overlapping area of bead, by start and end areas of bead as shown in the figure. Apply so that the portion marked * comes at an external location but cannot be viewed externally after engine assembly.
D: Leave the start and end areas of the bead slightly protruding from the case surface.

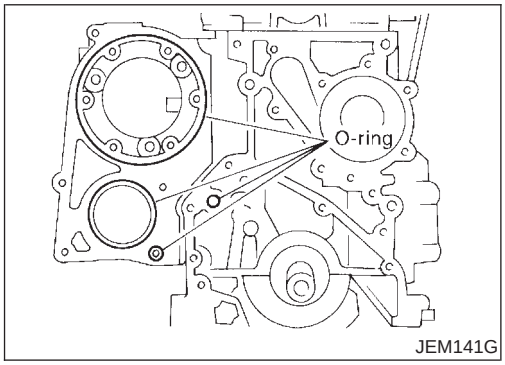

JEM141G

b. Install four O-rings to the grooves of the cylinder block, fuel injection pump bracket.

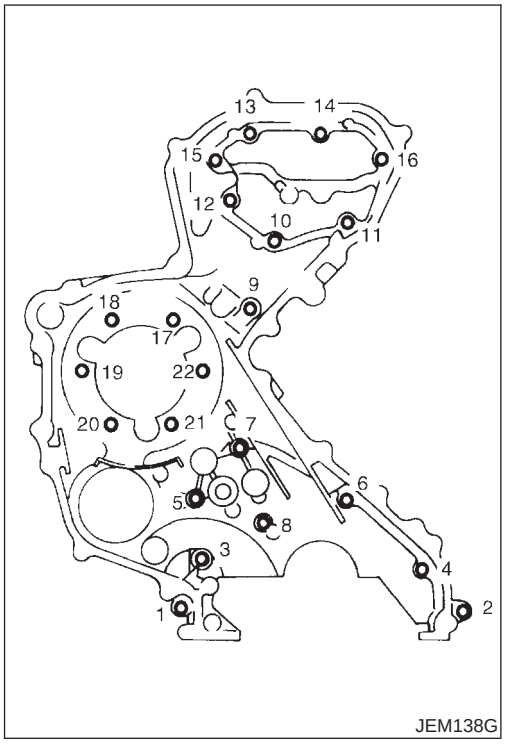

JEM138G

c. Install rear chain case.

- When installing, align the dowel pin with the pin hole.

d. Tighten bolts in the numerical order shown in the figure.

- Install the following four types of bolts, referring to the figure.
  16 mm (0.63 in): Bolt No. 1, 2, 16, 17, 18, 19, 20, 21, 22
  20 mm (0.79 in): Bolt No. 3, 4, 6, 9, 10, 11, 13, 14
  25 mm (0.98 in): Bolt No. 12, 15
  35 mm (1.38 in): Bolt No. 5, 7, 8
- The shank length under the bolt neck above is the length of threaded part (pilot portion not included).

e. After tightening all the bolts, re-tighten in the same order.

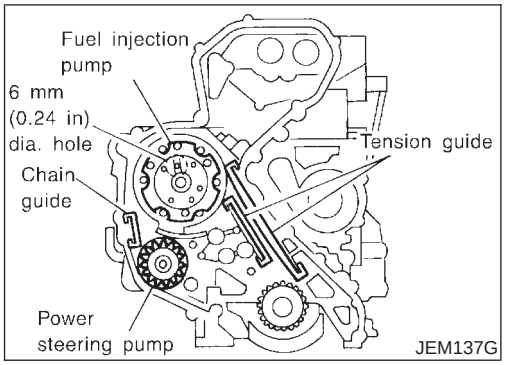

2. Install power steering pump.
3. Install fuel injection pump.
- Before installing, make sure the notch on the fuel injection pump flange and the hole 6 mm (0.24 in) in diameter on the pump body are aligned.
4. Install chain guide and tension guides.
5. Install crankshaft sprocket, aligning it with the crankshaft key on the far side.

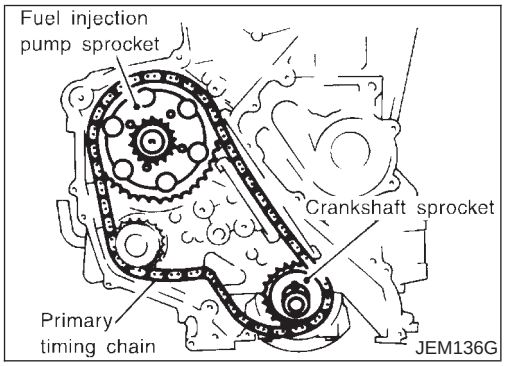

6. Install primary timing chain with fuel injection pump sprocket.
- When installing, match the alignment marks on sprockets with color coded alignment marks (colored links) on the chain.
- Install fuel injection pump sprocket washer with the surface marked "F" (front mark) facing the front of the engine.
7. Install timing chain onto power steering pump sprocket and through chain guide.

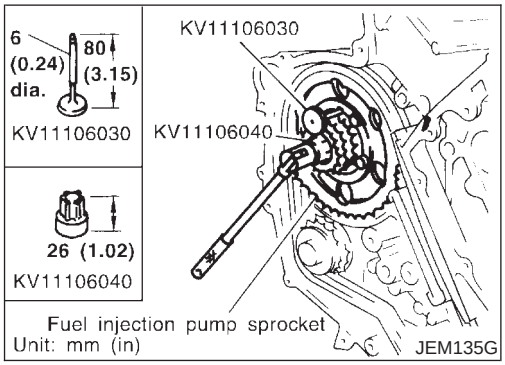

8. Use the positioning stopper pin (SST) to hold the fuel injection pump sprocket and install the bolt.
- Using a TORX wrench (SST), turn the pump shaft little by little to adjust the position of the pump flange. Insert positioning stopper pin (SST) into the hole 6 mm (0.24 in) in diameter on the fuel injection pump sprocket so that the stopper pin goes through the pump flange to the pump body. While the stopper pin is in place, install the bolt.

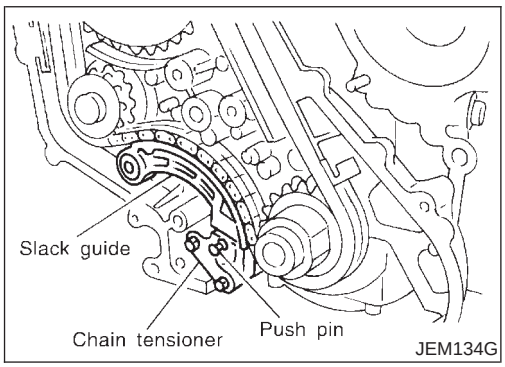

9. Install timing chain slack guide.
10. Install chain tensioner.
- Push the plunger of the chain tensioner. While keeping plunger pressed down with a push pin, etc., install the chain tensioner.
- After installation, pull out the push pin holding the plunger.
- **Check again that the alignment marks on the sprockets and the colored alignment marks on timing chain are aligned.**

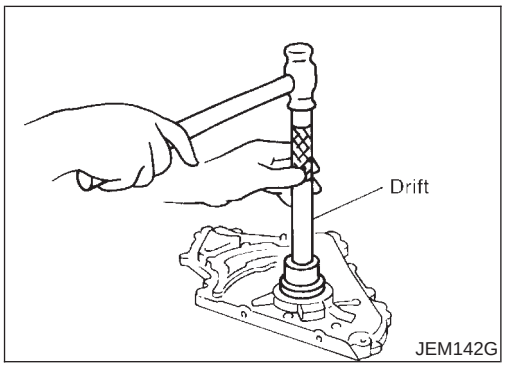

11. Install front oil seal to oil pump.
- Using a suitable drift [62 mm (2.44 in) dia.], force fit the seal until it hits the bottom.
- **Do not touch lips of oil seal. Make sure seal surfaces are free of foreign materials.**

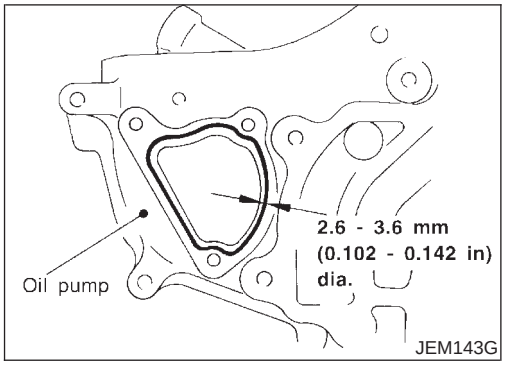

12. Install chain case cover (for opening for power steering pump removal/installation) to oil pump.
- Apply a continuous bead of specified liquid gasket (Refer to EM-77, "Liquid Gasket Application Procedure".) as shown in the figure.
- Apply liquid gasket on oil pump-side surface.

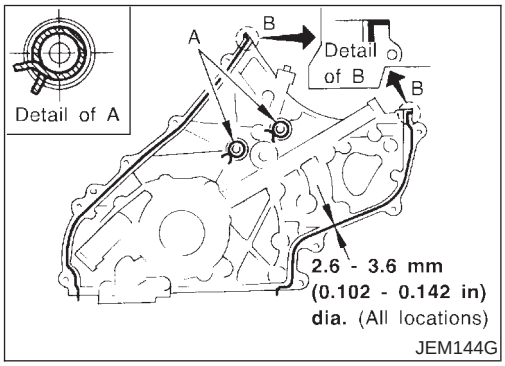

13. Install oil pump.

a. Apply a continuous bead of specified liquid gasket (Refer to EM-77, "Liquid Gasket Application Procedure".) on locations shown in the figure.
A: Leave the start and end areas of the bead slightly protruding from the surface.
B: Apply liquid gasket along upper end surface of oil pump.

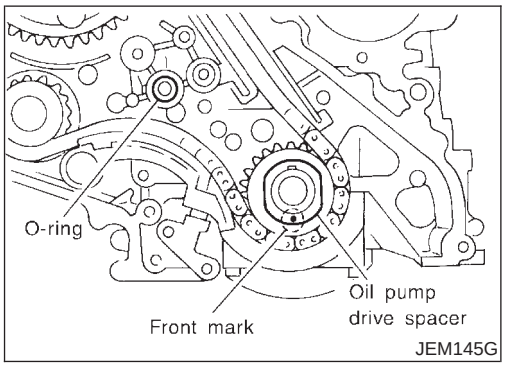

b. Install oil pump drive spacer to crankshaft.
- Install with the front mark (punched mark) facing the front of the engine.

c. Install O-ring into the groove of rear chain case.

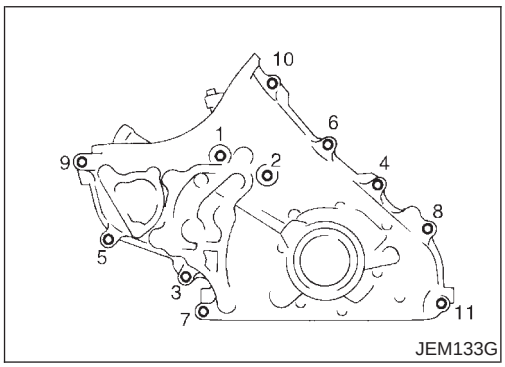

d. Install oil pump.
- When installing, align the inner rotor in the direction of the two facing flats of the oil pump drive spacer.
- When installing, align the dowel pin with the pin hole.

e. Tighten fixing bolts in the numerical order shown in the figure.

f. After tightening all the bolts, re-tighten in the same order.

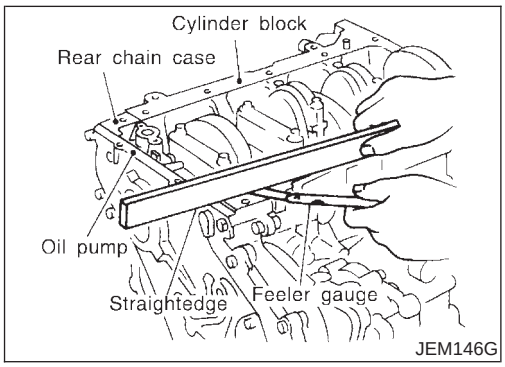

14. Check gaps on upper oil pan mounting surface.
- Using straightedge and feeler gauge, measure gaps between the locations of the following parts:

  Standard:

  Oil pump and rear chain case

  –0.14 to 0.14 mm (–0.0055 to 0.0055 in)

  Rear chain case and cylinder block

  –0.25 to 0.13 mm (–0.0098 to 0.0051 in)
- If the measured value is out of the above range, install again.

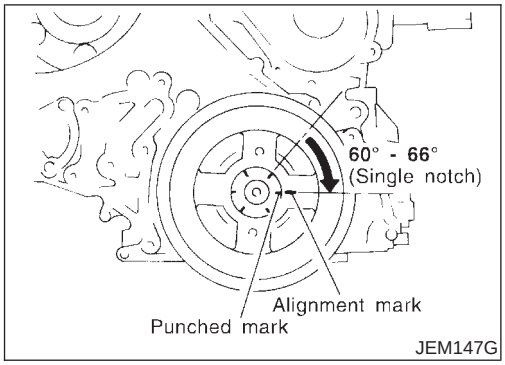

15. Install crankshaft pulley.
a. Install crankshaft pulley to crankshaft.
b. Hold crankshaft pulley with the pulley holder (SST).
c. Tighten bolt to 20 to 29 N·m (2.0 to 3.0 kg-m, 15 to 21 ft-lb).
d. Put an alignment mark on crankshaft pulley that aligns with one of the punched marks on the bolt.
e. Tighten fixing bolt another 60° - 66° [target: 60° (turn by one notch)].
16. Install secondary timing chain and the associated parts.
Refer to EM-96, "Secondary Timing Chain", "INSTALLATION".
17. Install in the reverse order of removal hereafter.

Removal and Installation

NJEM0109

SEC. 140•147•164•211•223
For Europe

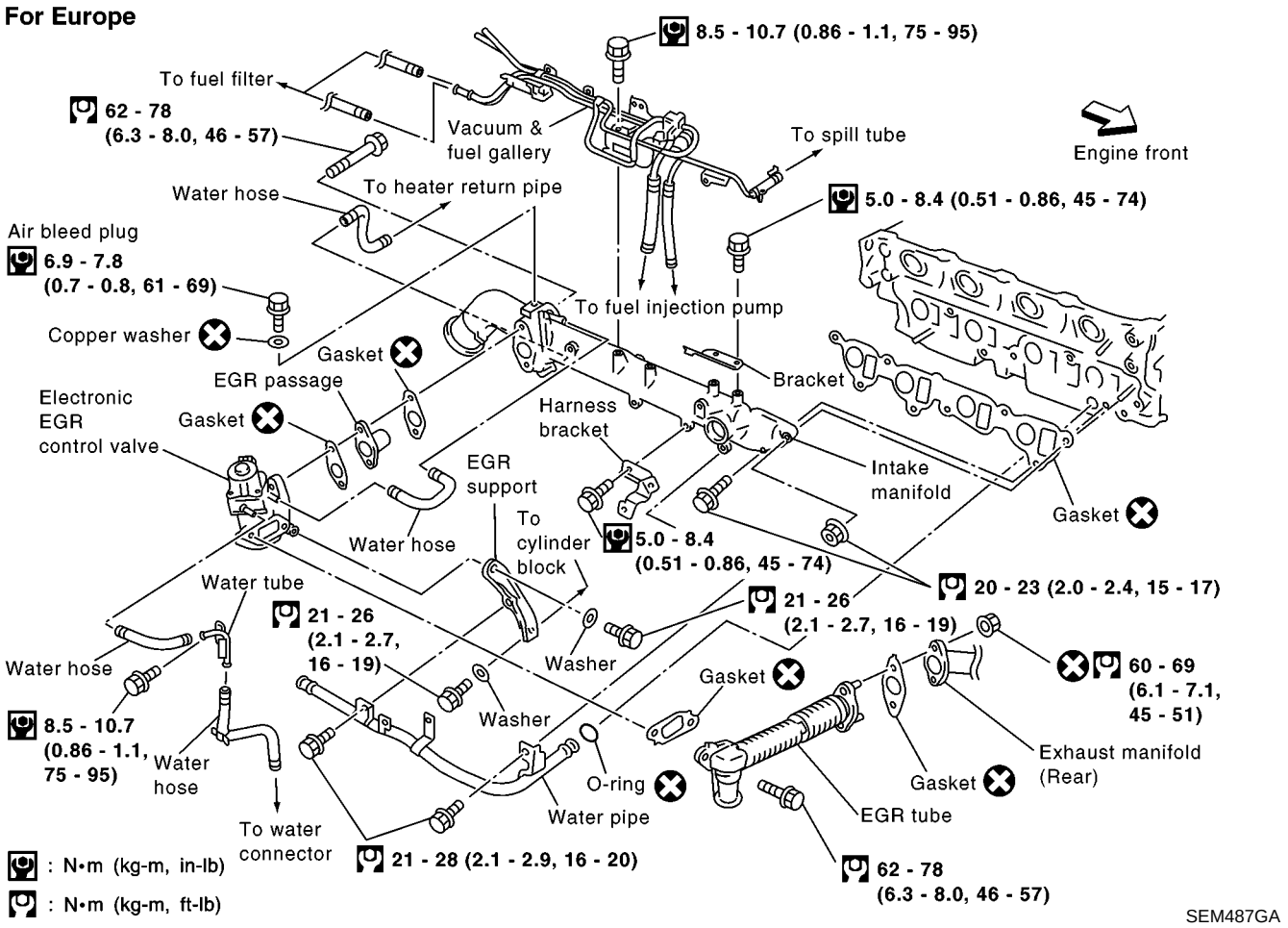

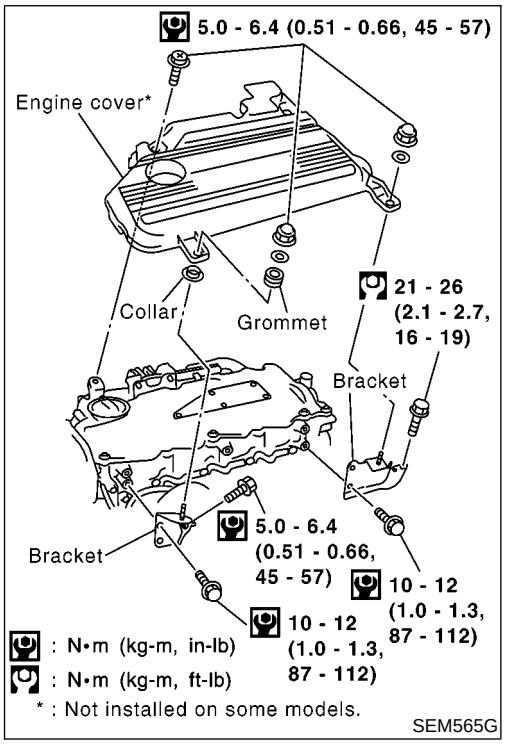

PREPARATIVE WORK

NJEM0109S01

1. Drain engine coolant. Refer to LC-44, “Changing engine coolant”.
2. Remove engine cover. Refer to the figure at left.
3. Remove injection tube.
4. Remove blow-by hose (on rocker cover side).
5. Remove or relocate fuel pipes.
6. Remove or relocate wires/harnesses and tubes/pipes.

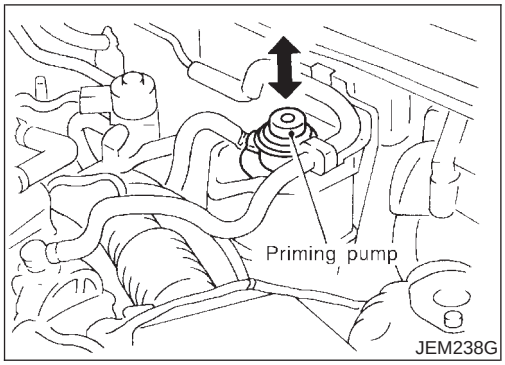

FUEL PIPING

NJEM0109S02

Removal

NJEM0109S0201

- To prevent fuel from flowing out, plug the opening of the hose with a blind plug after disconnection.
- **Be careful not to spill fuel in the engine compartment.**

Installation

NJEM0109S0202

- After repairing, bleed air in pipes by shifting priming pump up and down until the touch is heavy.
- For further air bleeding, idle at least 1 minute or more.

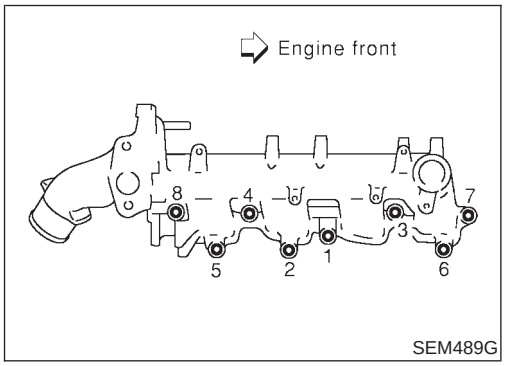

INTAKE MANIFOLD

NJEM0109S03

Removal

NJEM0109S0301

- Loosen bolts and nuts in the reverse order of that shown in the figure.

Installation

NJEM0109S0302

- When stud bolts come off, install with the following torque:
  : 10 - 11 N·m (1.0 - 1.2 kg-m, 87 - 104 in-lb)
- Tighten fixing bolts in the numerical order shown in the figure.

EGR VOLUME CONTROL VALVE

NJEM0109S04

- **Handle with care avoiding any shocks.**
- **Do not disassemble or adjust.**

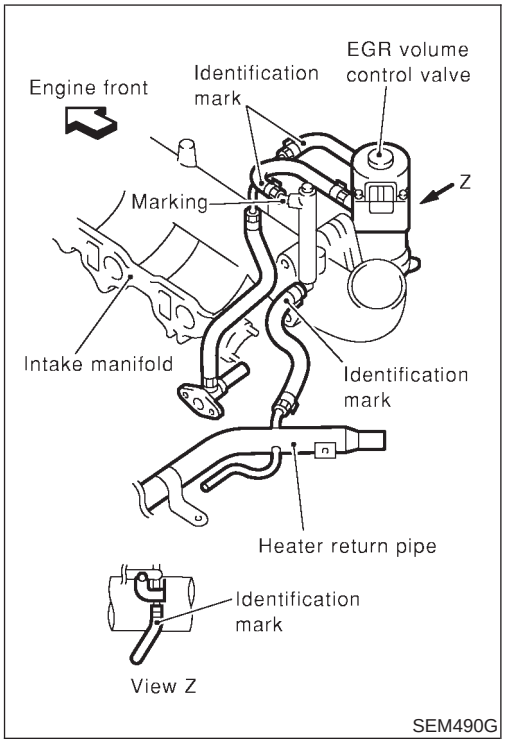

WATER HOSE

NJEM0109S05

Installation

NJEM0109S0501

- Install water hose by referring to identification marks; avoiding twisting.
- When an insert stopper is not provided with the pipe, insert the hose up to dimension A. When the pipe is shorter than dimension A, insert hose fully until it reaches the end.
  Dimension A: 25 - 30 mm (0.984 - 1.181 in)
- When an insert stopper is provided on the pipe side, insert the hose until it reaches the bulge.
- When marking is provided on the pipe, insert hose until it covers half of the marking.

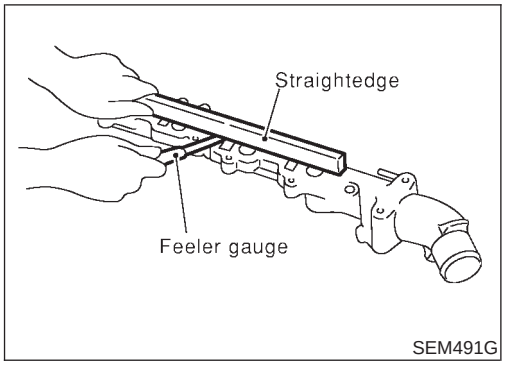

Inspection

NJEM0110

INTAKE MANIFOLD

NJEM0110S01

Check distortion on the mounting surface with a straightedge and feeler gauge.

Limit: 0.1 mm (0.004 in)

Removal and Installation

NJEM0101

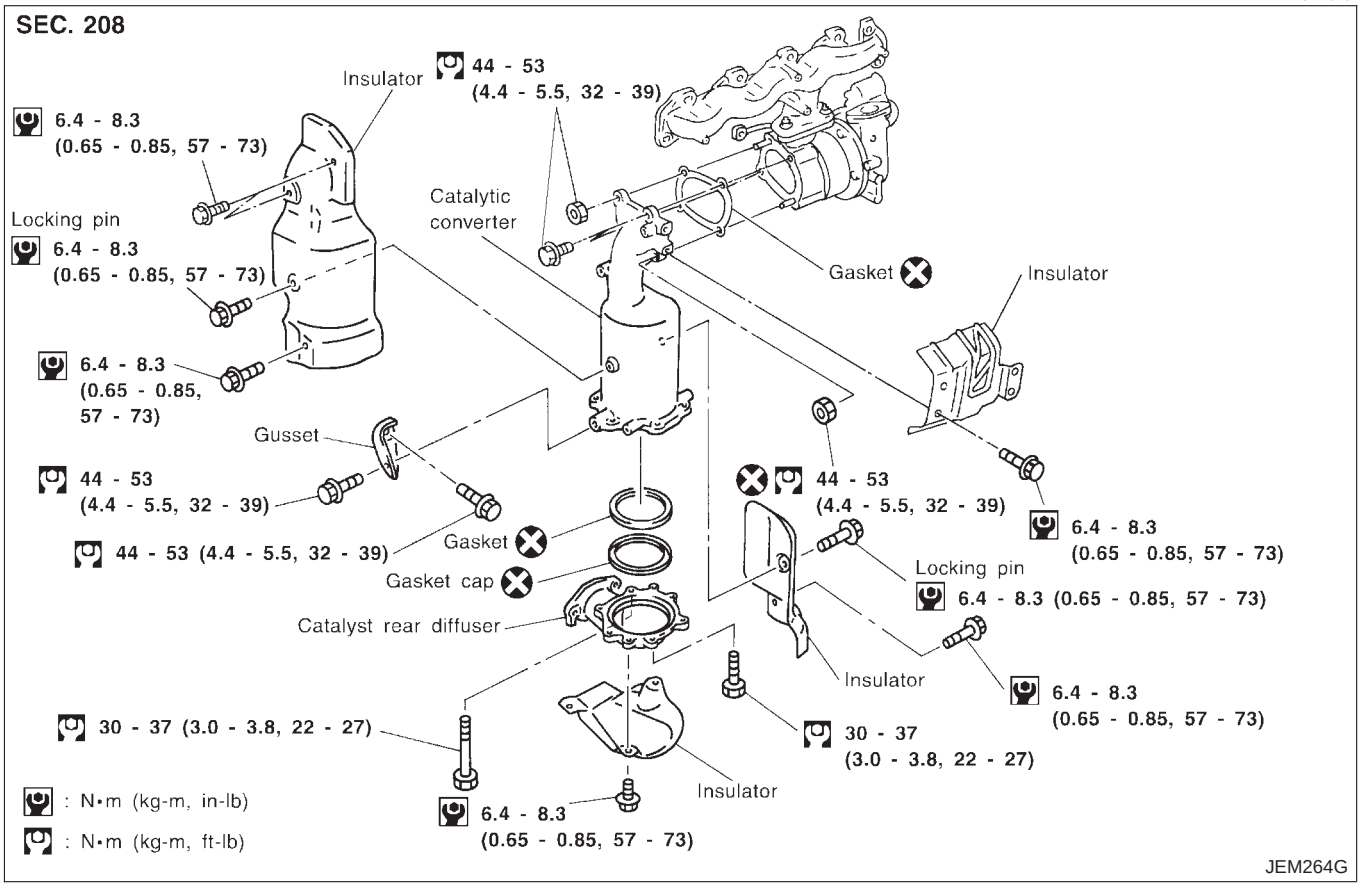

PREPARATIVE WORK

NJEM0101S01

Remove the following parts.

- Under cover
- Engine coolant (drain)
  Refer to LC-44, “Changing Engine Coolant”.
- Radiator upper hose
- Cooling fan
  Refer to LC-43, “Radiator”.
- Radiator mount bracket
- Water inlet pipe
- Exhaust front tube (disconnect)
  Refer to FE-32, “Removal and Installation”, “EXHAUST SYSTEM”.

CATALYST

NJEM0101S02

Removal

NJEM0101S0201

CAUTION:

Do not disassemble.

Installation

NJEM0101S0202

Install two locking pins into both sides of the catalytic converter. Be careful not to confuse locking pins with insulator mounting bolts.

Catalytic converter locking pin:
Flange bolt (black)
Insulator mounting bolt:
Washer bolt (silver or yellow)

GUSSET

NJEM0101S03

Installation

NJEM0101S0301

Pushing gussets against the oil pan and the catalytic converter, temporarily tighten the mounting bolt. And then tighten it to the specified torque.

Removal and Installation

NJEM0102

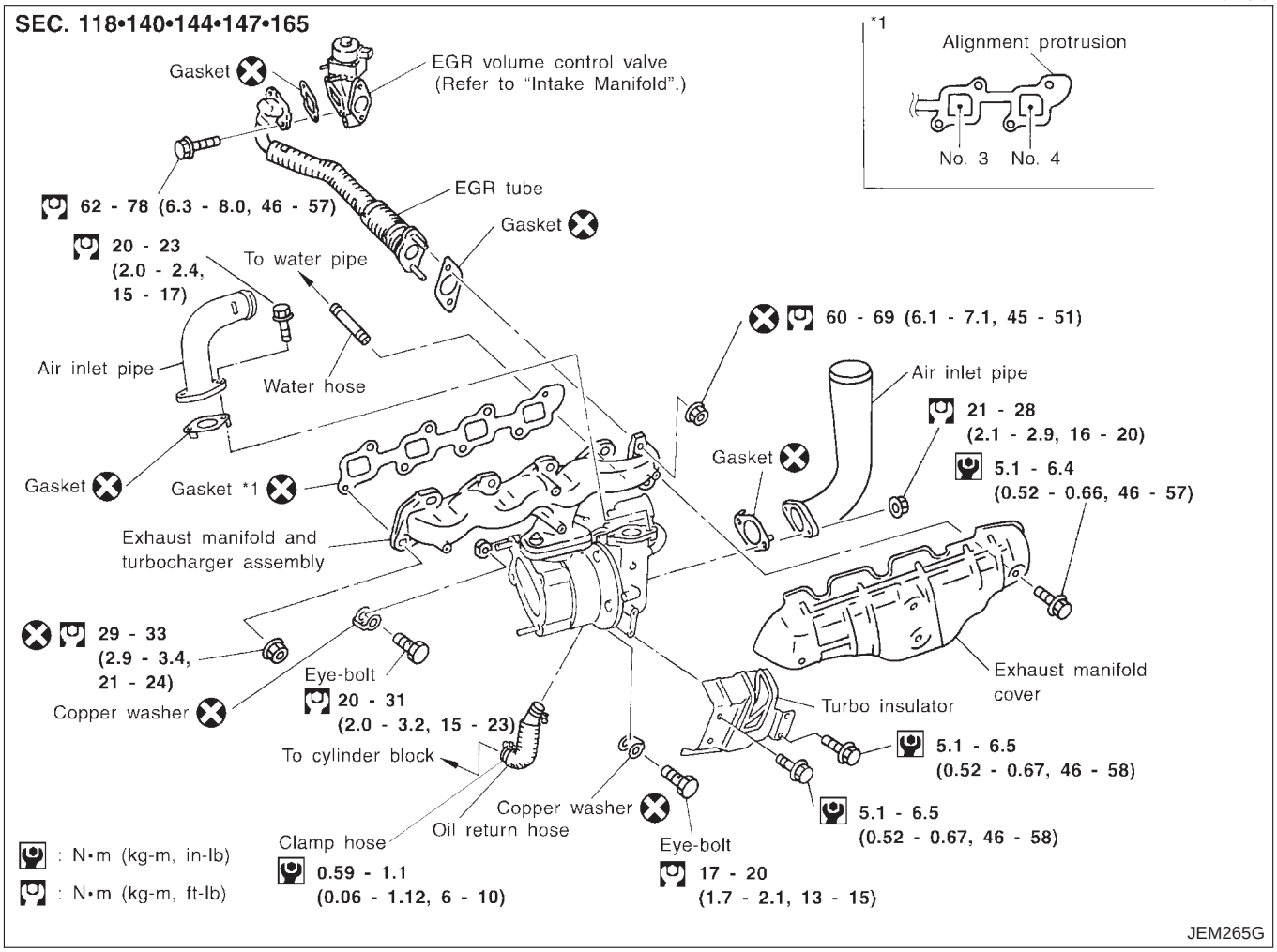

PREPARATIVE WORK

NJEM0102S01

Remove the following parts.

- Engine coolant (drain)
  Refer to LC-44, "Changing Engine Coolant".
- Air duct, air inlet pipe
- Water inlet pipe
- Catalytic converter
- Exhaust manifold cover
- Insulator
- A/T fluid charging pipe mounting bolt
- Each wiring and piping (disconnect/move)

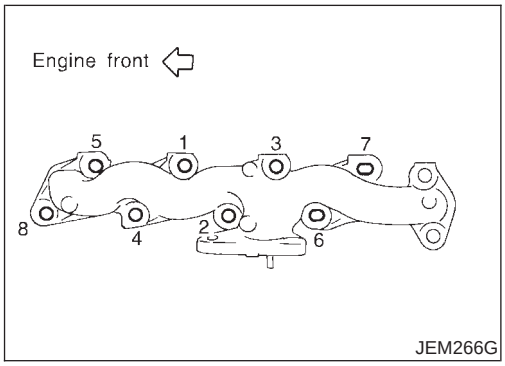

EXHAUST MANIFOLD AND TURBOCHARGER

NJEM0102S02

Removal

NJEM0102S0201

- Loosen exhaust manifold mounting nuts in the reverse order specified in the figure.
- Rotate the exhaust manifold and turbocharger assembly so that the rear side (EGR tube mounting side) faces upward. And then pull out the assembly from between the engine and the air conditioning piping.

CAUTION:

Be careful not to deform each turbocharger piping when pulling out the assembly.

Installation

NJEM0102S0202

- When a stud bolt is pulled out, tighten it to the following torque:
  : 18 - 21 N·m (1.8 - 2.2 kg-m, 13 - 15 ft-lb)
- Tighten the exhaust manifold mounting nuts in the following procedure:

a) Tighten the nuts in the order specified in the figure.
b) Re-tighten the nuts 1 to 4.

EXHAUST MANIFOLD GASKET

NJEM0102S03

Installation

NJEM0102S0301

Install the gasket so that the alignment protrusion faces the No. 4 port.

Disassembly and Assembly

NJEM0103

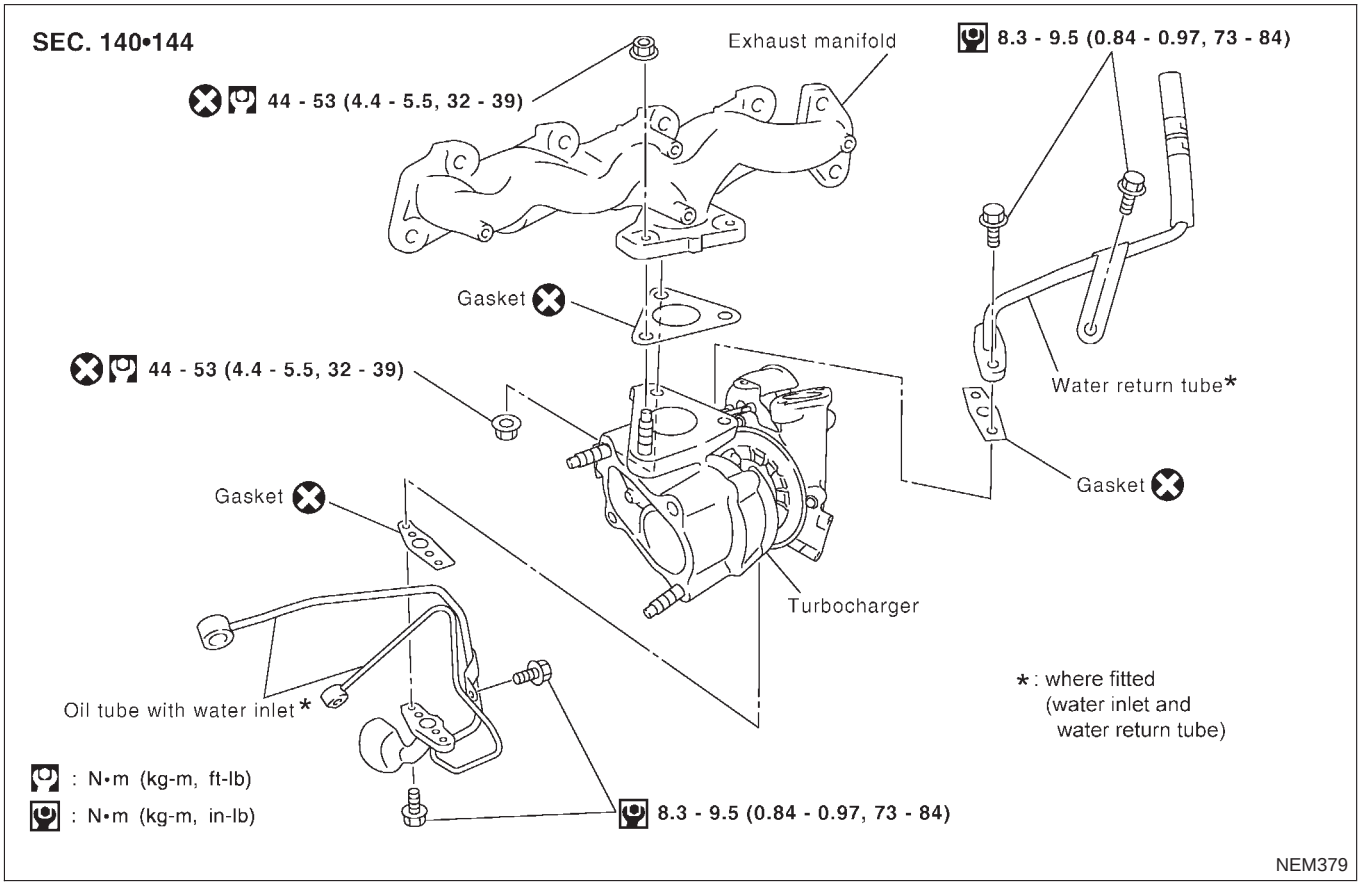

TURBOCHARGER

NJEM0103S01

Disassembly

NJEM0103S0101

After applying penetration lubricant (Lucen, etc.) to the mounting nuts, check for the penetration of the lubricant, and then loosen the nuts to remove.

CAUTION:
Do not disassemble or adjust the turbocharger body.

Assembly

NJEM0103S0102

When a stud bolt is pulled out, tighten it to the following torque:

: 24 - 27 N·m (2.4 - 2.8 kg-m, 18 - 20 ft-lb)

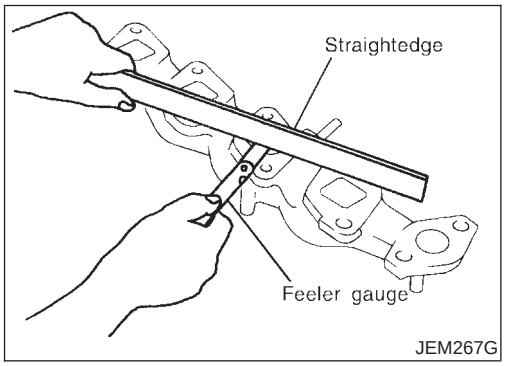

Inspection

NJEM0104

EXHAUST MANIFOLD

NJEM0104S01

Check the distortion on the mounting surface in the six directions using a straightedge and a feeler gauge.

Limit: 0.3 mm (0.012 in)

TURBOCHARGER

NJEM0104S02

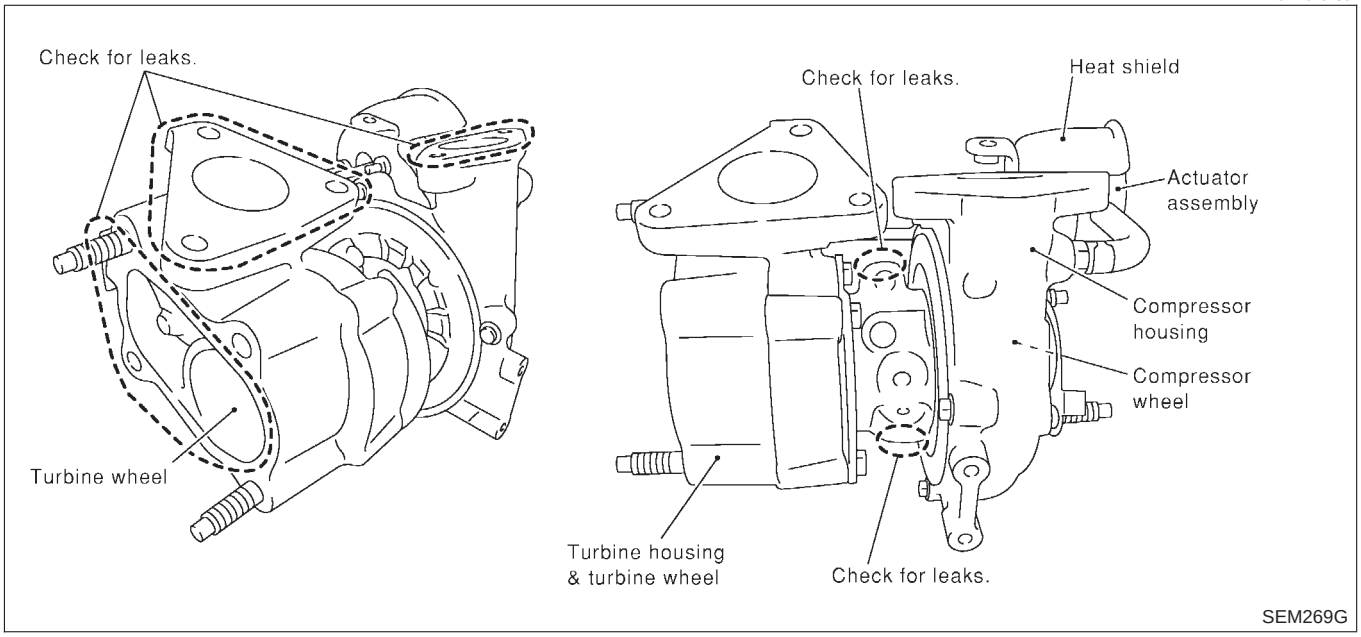

CAUTION:
When the compressor wheel, turbine wheel, or rotor shaft is damaged, remove all the fragments and foreign matter left in the following passages in order to prevent a secondary failure:

Suction side: Between turbocharger and air cleaner

Exhaust side: Between turbocharger and catalytic converter

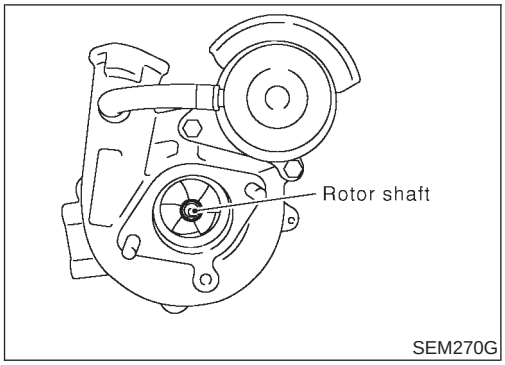

Rotor Shaft

NJEM0104S0201

- Check that the rotor shaft rotates smoothly without any resistance when it is rotated by your fingertips.
- Check that the rotor shaft is not loose when it is moved vertically or horizontally.

Standard value for rotor shaft oil clearance:
0.086 - 0.117 mm (0.0034 - 0.0046 in)

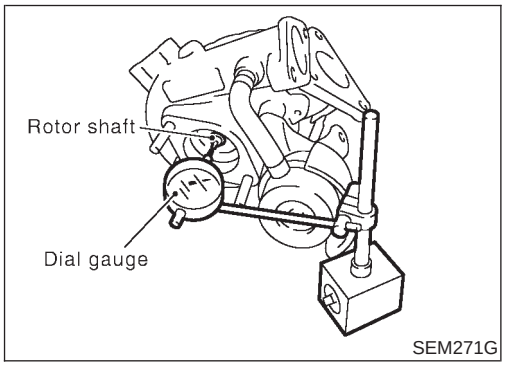

Rotor Shaft End Play

NJEM0104S0202

Place a dial gauge at the rotor shaft end in the axial direction to measure the end play.

Standard: 0.036 - 0.090 mm (0.0014 - 0.0035 in)

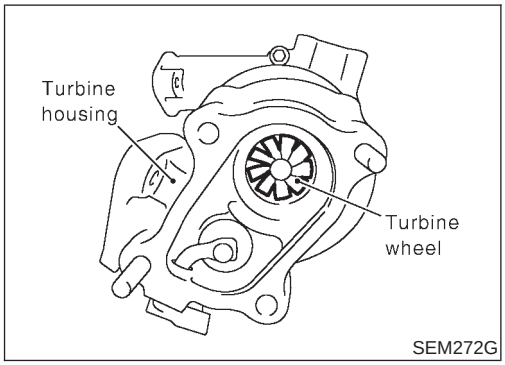

Turbine Wheel

NJEM0104S0203

- Check that there is no oil adhesion.
- Check that there is no carbon accumulation.
- Check that blades of the turbine wheel are not bent or broken.
- Check that the turbine wheel does not interfere with the turbine housing.

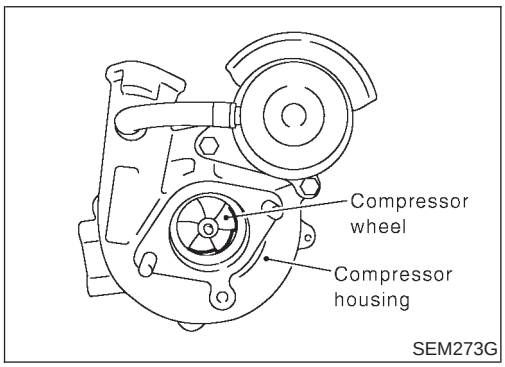

Compressor Wheel

NJEM0104S0204

- Check that there is no oil adhesion inside the air inlet.
- Check that the compressor wheel does not interfere with the compressor housing.
- Check that the wheel is not bent or broken.

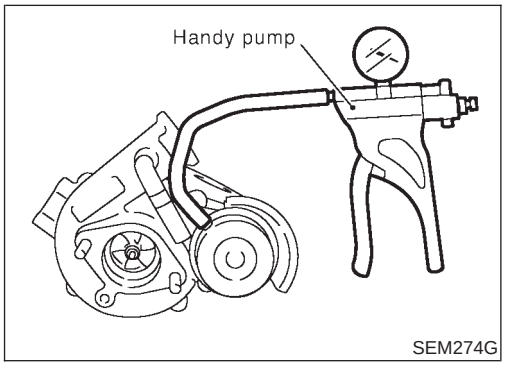

Wastegate Valve Actuator

NJEM0104S0205

- Connect the handy pump to the actuator, and check that the rod strokes smoothly in compliance with the following pressure.
- Pressure to be applied at actuator part to move rod end as follows:

Standard (Pressure/rod stroke amount):

115.44 - 120.76 kPa (1,154 - 1,208 mbar, 866.0 - 906.0 mmHg, 34.1 - 35.7 inHg)/0.38 mm (0.0150 in)

140.54 - 149.86 kPa (1,405 - 1,498 mbar, 1,054.3 - 1,124.2 mmHg, 41.5 - 44.3 inHg)/4.0 mm (0.157 in)

Trouble Diagnosis of Turbocharger

=NJEM0104S0206

Preliminary check:

- Check that the engine oil level is between MIN and MAX of the dipstick. (When the engine oil amount is more than MAX, the oil flows into the inlet duct through the blow-by gas passage, and the turbocharger is misjudged failure.)
- Ask the customer if he/she always runs the vehicle in idle engine speed to cool the oil down after driving.
- Replace the turbocharger assembly when any malfunction is found after unit inspections specified in the table below.
- If no malfunction is found after the unit inspections, judge that the turbocharger body has no failure. Check the other parts again.

Inspection item	Inspection result	Symptom (when each inspection item meets each inspection result)			
		Oil leakage	Smoke	Noise	Insufficient power/ acceleration failure
Turbine wheel	Oil leaks.	△	◎	△	△
	Carbon is accumulated.	△	◎	○	○
	Friction with housing.	△	○	◎	○
	Blades are bent or broken.			◎	◎
Compressor wheel	Inside the air inlet is seriously contaminated by oil.	○	○		
	Friction with housing.	△	○	◎	○
	Blades are bent or broken.			◎	◎
After checking both turbine and compressor, inspect rotor shaft end play.	There is resistance when the rotor shaft is rotated by your fingertips.		△	△	○
	The rotor shaft sometimes does not rotate by your fingertips.				◎
	There is too much play in the bearing.	△	△	○	△
Oil return port	Carbon or sludge is accumulated in the waste oil hole.	△	◎	△	△

◎ : Large possibility
○: Medium possibility
△: Small possibility

Removal and Installation

NJEM0099

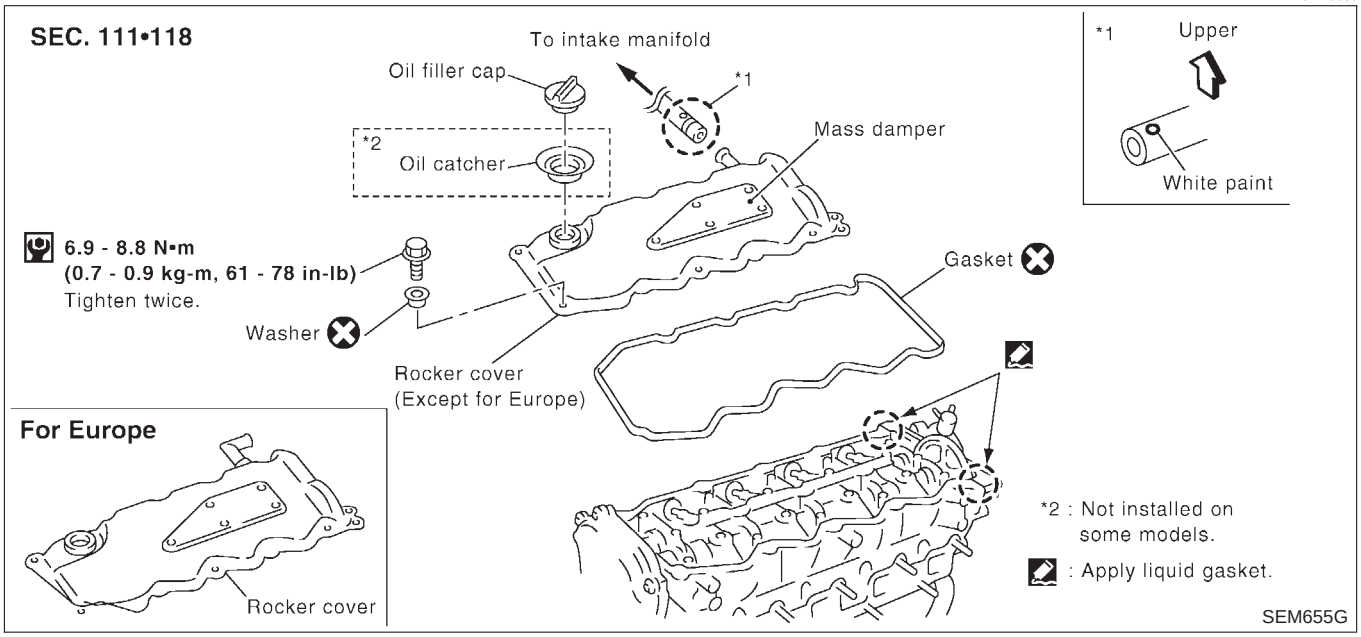

PREPARATIVE WORK

NJEM0099S01

Remove engine cover.

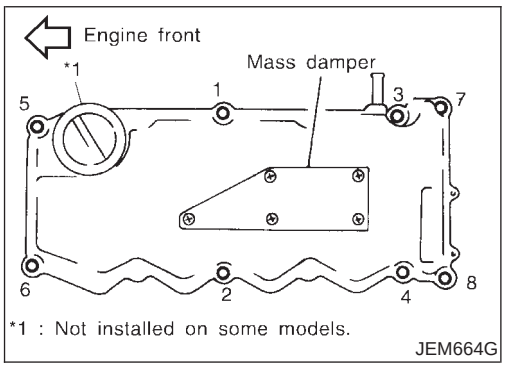

ROCKER COVER

NJEM0099S02

Removal

NJEM0099S0201

Loosen holding bolts in the reverse order of that shown in the figure and remove.

CAUTION:

Do not remove mass damper on top. If damper must be removed, remove all traces of old locking sealant from threads of bolts and holes, and apply new locking sealant on the bolts before tightening.

Installation

NJEM0099S0202

- Tighten holding bolts in the numerical order shown in the figure.
- Re-tighten to the same torque in the same order as above.

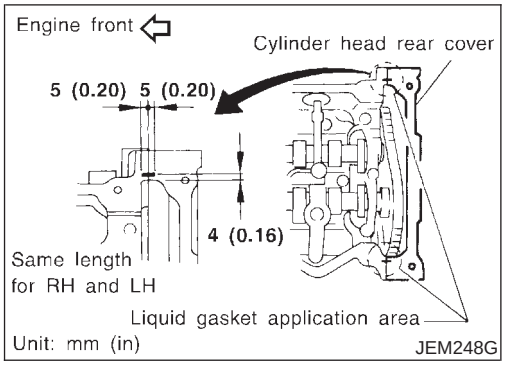

- Apply 3.0 mm (0.118 in) dia. of specified liquid gasket (Refer to EM-77, "Liquid Gasket Application Procedure".) on locactions shown in the figure.

Components

NJEM0062

SEC. 111•210•220•253

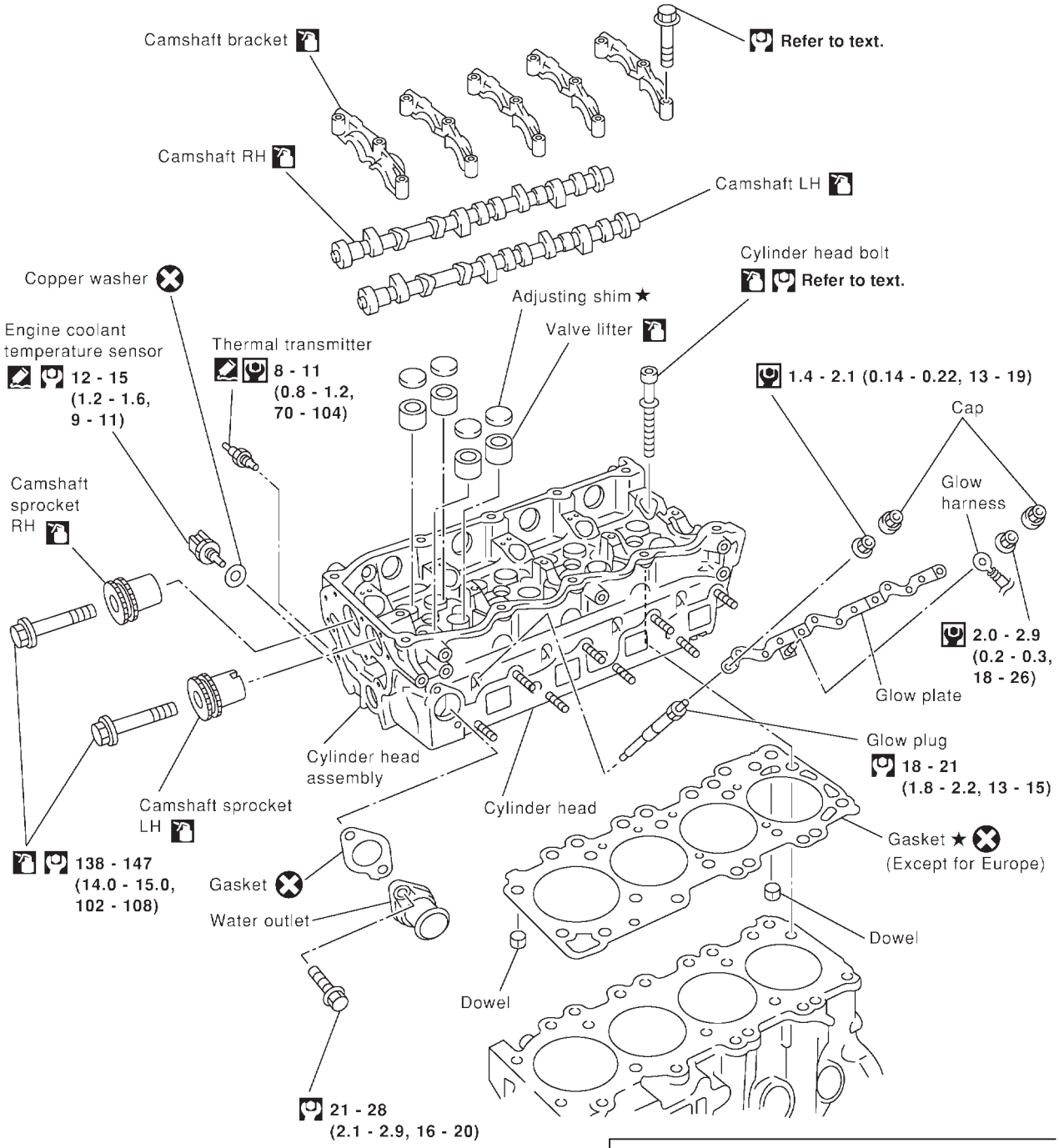

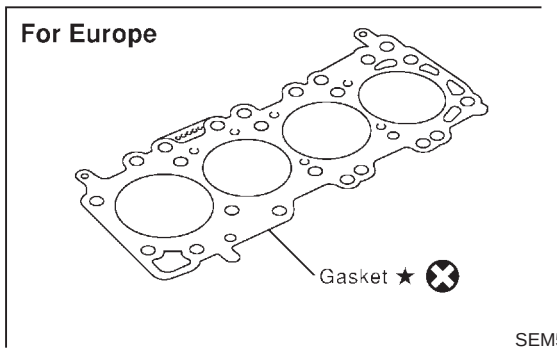

SEM504G

★ : Select with proper thickness.
: Lubricate with new engine oil.
: Apply liquid gasket.
: N•m (kg-m, ft-lb)
: N•m (kg-m, in-lb)

CAUTION:

- **When installing camshafts, chain tensioners, oil seals, or other sliding parts, lubricate contacting surfaces with new engine oil.**
- **Apply new engine oil to threads and seat surfaces when installing cylinder head, camshaft sprocket, crankshaft pulley, and camshaft bracket.**
- **Attach tags to valve lifters so as not to mix them up.**

Removal

NJEM0063

PREPARATIVE WORK

NJEM0063S01

1. Drain engine coolant. Refer to LC-44, "Changing Engine Coolant".
2. Remove exhaust manifold. Refer to EM-112, "Removal".
3. Remove intake manifold. Refer to EM-108, "Removal".

- **Apply paint to camshaft sprockets for alignment during installation.**

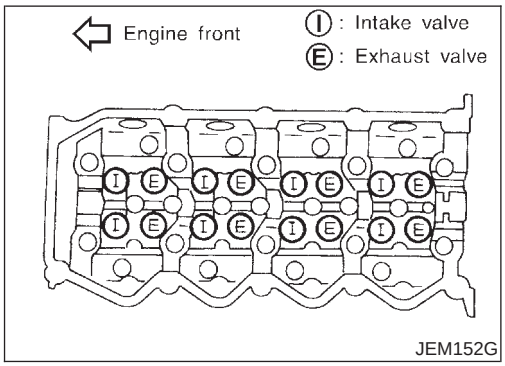

JEM152G

CAMSHAFT

NJEM0063S02

1. Remove the following parts:

- Rocker cover
- Vacuum pump and cylinder head rear cover assembly
- Spill tube
- High pressure injection nozzle assembly
- Secondary timing chain and associated parts

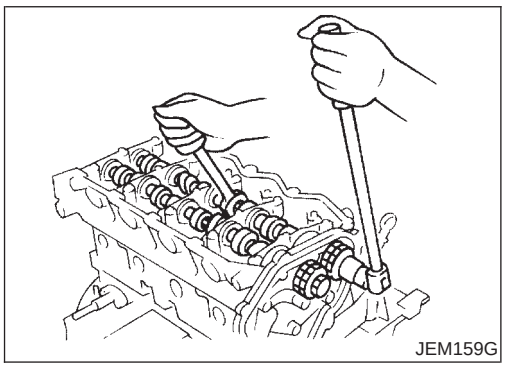
JEM159G

2. Remove camshaft sprockets.

- Holding the hexagonal part of the camshaft with a wrench having 21 mm (0.83 in) width between facing flats, loosen the bolt holding the camshaft sprocket.

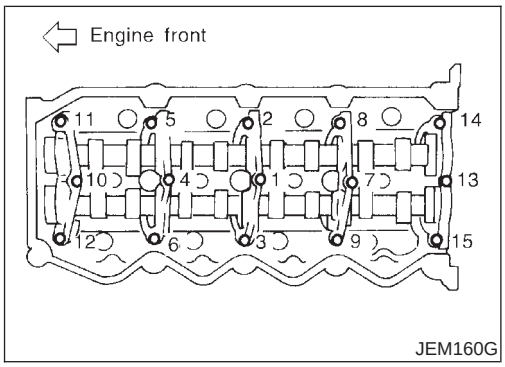

JEM160G

3. Remove camshafts.

- Loosen bolts holding the camshaft bracket in several stages in the reverse order of that shown in the figure, and remove them.

4. Remove adjusting shims and valve lifters.

- Confirm the correct location of each part removed. Store them so they do not get mixed up.
- **For re-installation, be sure to put mark on camshaft bracket before removal.**

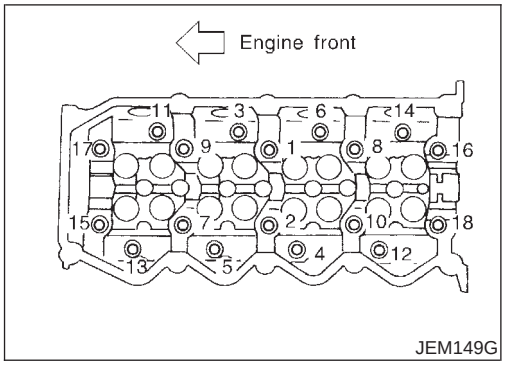

CYLINDER HEAD

NJEM0063S03

- Loosen bolts in the reverse order of that shown in the figure and remove them.
- **Be careful not to damage the tips of glow plugs projecting out of the bottom surface of the cylinder head. To avoid damage to glow plugs, either remove them beforehand, or support cylinder head with wooden blocks to create a space below the bottom surface.**

Disassembly

NJEM0100

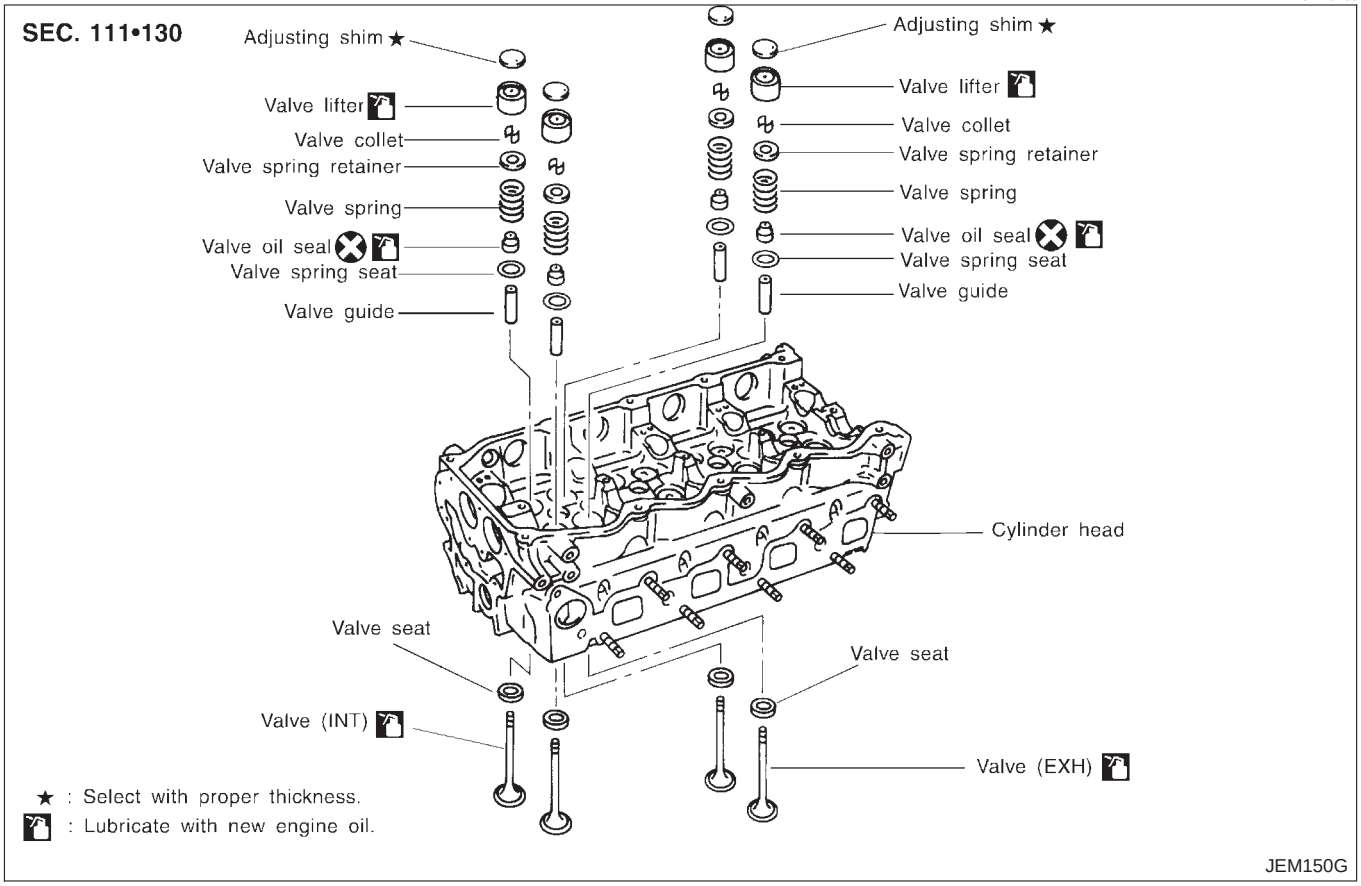

1. Remove adjusting shims and valve lifters. Confirm the correct location of each part removed. Store them in order to avoid mixing them up.

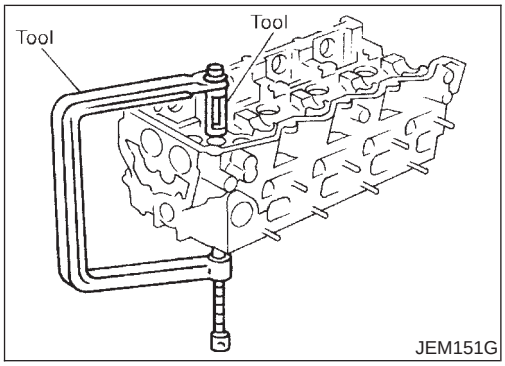

2. Remove valve collets.
- Compress valve spring with a valve spring compressor, and remove valve collet with a magnet hand.
3. Remove valve spring retainers, and valve springs.
4. Push valve stem toward combustion chamber and remove valve.
- Before removing valves, check valve guide clearance. Refer to EM-124, "VALVE GUIDE CLEARANCE".
- Confirm the correct location of each valve. Store them so they do not get mixed up.

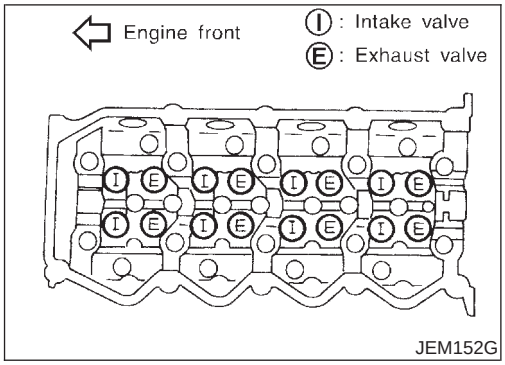

- For the locations and arrangement of intake and exhaust valves, refer to the figure.

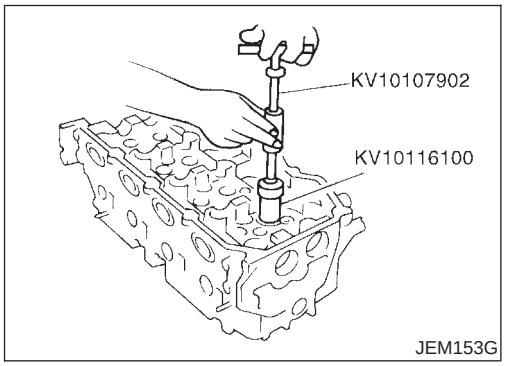

5. Remove valve oil seals.
- Use a valve oil seal puller (SST) for removal.
6. Remove valve spring seats.
7. When removing valve seats, check valve seat contact. Refer to EM-126.
8. Before removing valve guides, check valve guide clearance. Refer to EM-124, "VALVE GUIDE CLEARANCE".
9. Remove glow plugs.
- **To avoid damage, glow plugs should be removed only when required.**
- **Handle with care to avoid applying shock. (When dropped from approx. 100 mm (3.94 in) or higher, always replace with a new one.)**

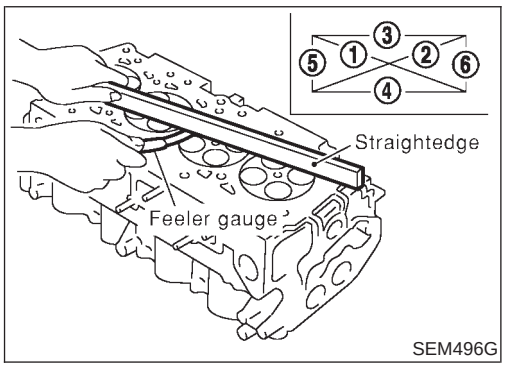

Inspection

NJEM0065

CYLINDER HEAD DISTORTION

NJEM0065S01

Clean surface of cylinder head.
Use a reliable straightedge and feeler gauge to check the flatness of cylinder head surface.
Check along six positions shown in the figure.

Head surface flatness: Limit 0.04 mm (0.0016 in)

If beyond the specified limit, resurface or replace it.
The limit for cylinder head resurfacing is determined by the cylinder block resurfacing.

Resurfacing limit:

Amount of cylinder head resurfacing is "A".
Amount of cylinder block resurfacing is "B".
The maximum limit: A + B = 0.07 mm (0.0028 in)

After resurfacing cylinder head, check that camshaft rotates freely by hand. If resistance is felt, cylinder head must be replaced.

Nominal cylinder head height:
153.9 - 154.1 mm (6.059 - 6.067 in)

CAMSHAFT VISUAL CHECK

NJEM0065S02

Check camshaft for scratches, seizure and wear.

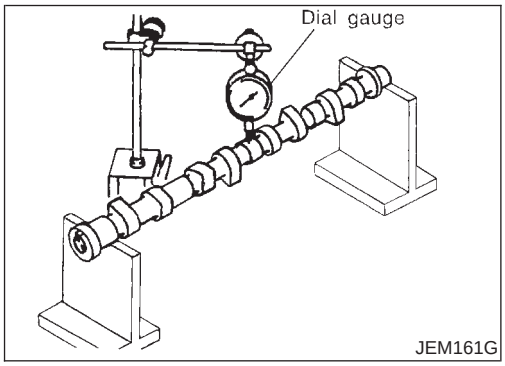

JEM161G

CAMSHAFT RUNOUT

NJEM0065S03

1. Place V-blocks on a work bench and support camshaft at No. 1 and No. 5 journal.
2. Set dial gauge perpendicularly at camshaft No. 3 journal.
3. Turn camshaft by hand in one direction and read runout on dial gauge.

   Runout (Total indicator reading):

   Limit 0.02 mm (0.0008 in)
4. If it exceeds the limit, replace camshaft.

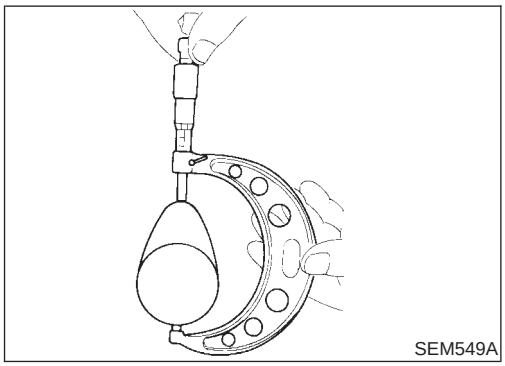
SEM549A

CAMSHAFT CAM HEIGHT

NJEM0065S04

1. Measure camshaft cam height.

   Standard cam height:

   Intake

   39.505 - 39.695 mm (1.5553 - 1.5628)

   Exhaust

   39.905 - 40.095 (1.5711 - 1.5785)

   Cam wear limit:

   0.2 mm (0.008 in)
2. If wear is beyond the limit, replace camshaft.

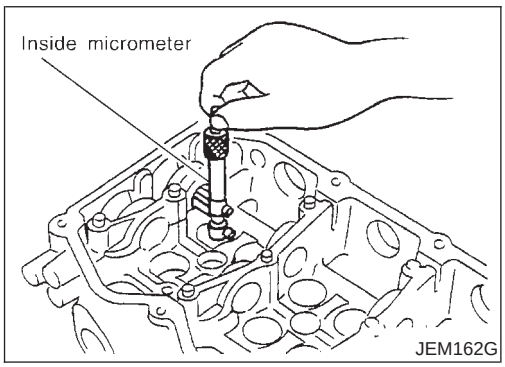

JEM162G

CAMSHAFT JOURNAL CLEARANCE

NJEM0065S05

1. Install camshaft bracket and tighten bolts to the specified torque.
2. Measure inner diameter of camshaft bearing.

   Standard inner diameter:

   No. 1: 30.500 - 30.521 mm (1.2008 - 1.2016 in)

   No. 2, 3, 4, 5: 24.000 - 24.021 mm (0.9449 - 0.9457 in)

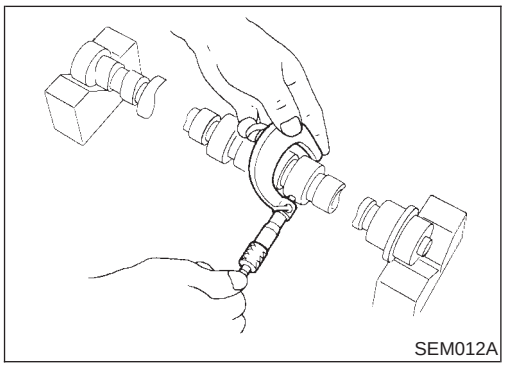
SEM012A

3. Measure outer diameter of camshaft journal.

   Standard outer diameter:

   No. 1: 30.435 - 30.455 mm (1.1982 - 1.1990 in)

   No. 2, 3, 4, 5: 23.935 - 23.955 mm (0.9423 - 0.9431 in)
4. If clearance exceeds the limit, replace camshaft and/or cylinder head.

   Camshaft journal clearance:

   Standard

   No. 1 - 5: 0.045 - 0.086 mm (0.0018 - 0.0034 in)

   Limit

   0.045 - 0.086 mm (0.0018 - 0.0034 in)

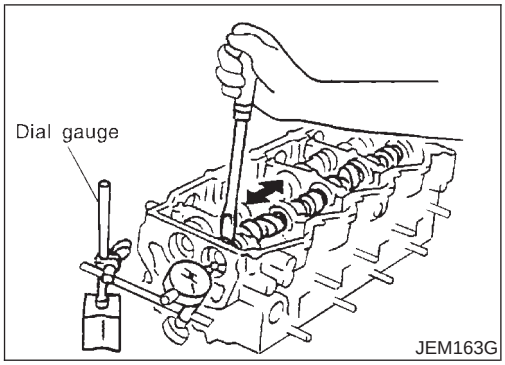

CAMSHAFT END PLAY

NJEM0065S06

1. Install camshaft in cylinder head.
2. Measure camshaft end play.

Camshaft end play:

Standard

0.070 - 0.148 mm (0.0028 - 0.0058 in)

Limit

0.24 mm (0.0094 in)

- If the value exceeds the limit, replace camshaft and measure again.
- If the measurement exceeds the limit again, replace cylinder head.

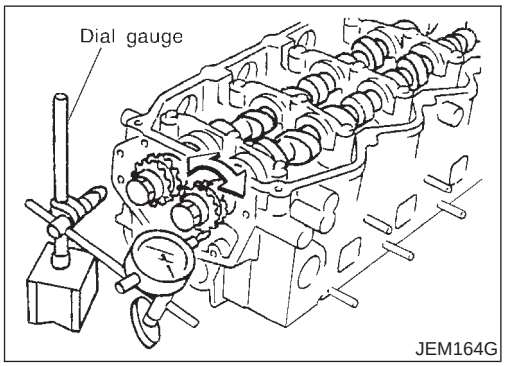

CAMSHAFT SPROCKET RUNOUT

NJEM0065S07

1. Install sprocket on camshaft.
2. Measure camshaft sprocket runout.

Runout (Total indicator reading):

Less than 0.15 mm (0.0059 in)

3. If it exceeds the limit, replace camshaft sprocket.

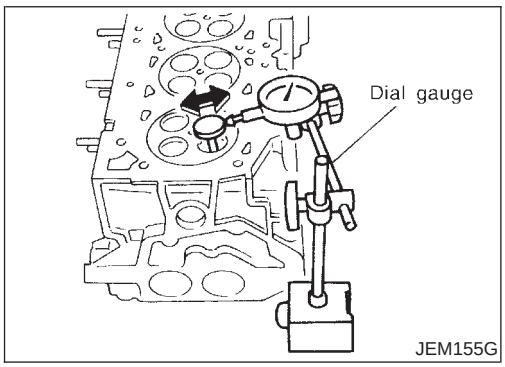

VALVE GUIDE CLEARANCE

NJEM0065S08

1. Check that valve stem diameter is within the specified range.
2. Push out valve approx. 25 mm (0.98 in) toward combustion chamber. Swing valve in the direction of the dial gauge to measure the runout.

- This inspection should be performed before removing valve guides.
- Half of the runout reading on the dial gauge is the valve guide clearance.

Standard:

Intake 0.020 - 0.053 mm (0.0008 - 0.0021 in)

Exhaust 0.040 - 0.073 mm (0.0016 - 0.0029 in)

3. If it exceeds the limit, check valve to valve guide clearance.

a. Measure valve stem diameter and valve guide inner diameter.

b. Check that clearance is within specification.

Valve to valve guide clearance limit:

Intake 0.08 mm (0.0031 in)

Exhaust 0.1 mm (0.004 in)

c. If it exceeds the limit, replace valve or valve guide.

VALVE GUIDE REPLACEMENT

NJEM0065S09

- When a valve guide is removed, replace with an oversized [0.2 mm (0.008 in)] valve guide.

1. To remove valve guide, heat cylinder head to 110 to 130°C (230 to 266°F) by soaking in heated oil.

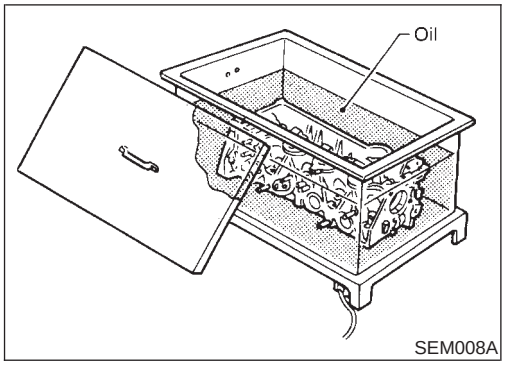

SEM008A

2. Drive out valve guide with a press [under a 20 kN (2 ton, 2.2 US ton, 2.0 Imp ton) pressure] or hammer and suitable tool.

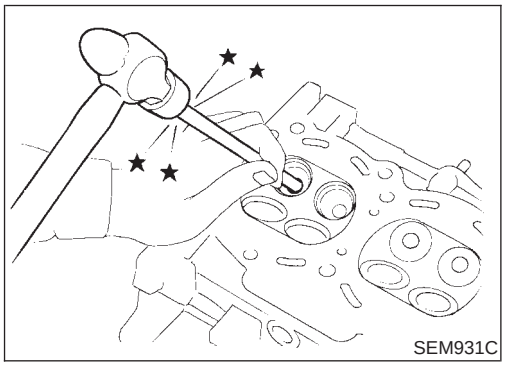
SEM931C

3. Ream cylinder head valve guide hole.

   Valve guide hole diameter (for service parts):
   10.175 - 10.196 mm (0.4006 - 0.4014 in)

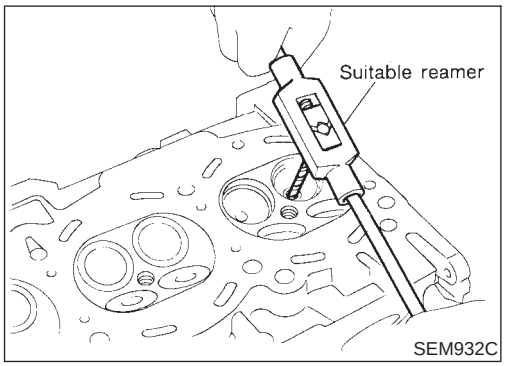

SEM932C

4. Heat cylinder head to 110 to 130°C (230 to 266°F) and press service valve guide onto cylinder head.

   Projection "L":
   10.4 - 10.6 mm (0.409 - 0.417 in)

5. Ream valve guide.

   Finished size:
   6.000 - 6.018 mm (0.2362 - 0.2369 in)

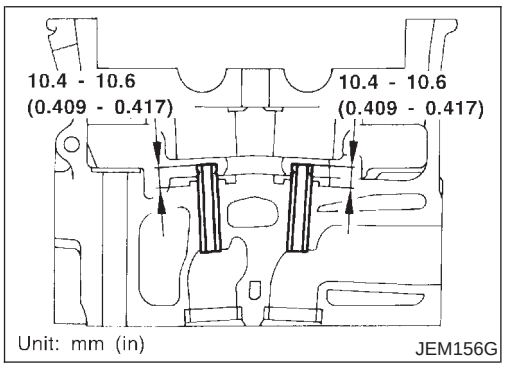

JEM156G

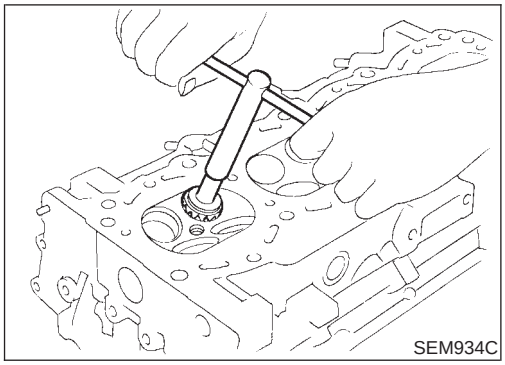

VALVE SEATS

NJEM0065S10

- Before starting this check, confirm that the dimensions of valve guides and valves are as specified.
- Apply red lead primer on contacting surfaces of valve seat and of valve face to examine the conditions of contacting surfaces.
- Check that the paint on contacting surfaces is continuous along the entire circumference.
- If there are abnormal indications, grind the valve and check the contact again. If abnormal indications still persist, replace valve seat.

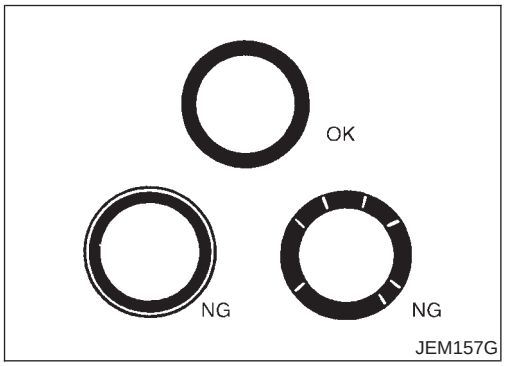

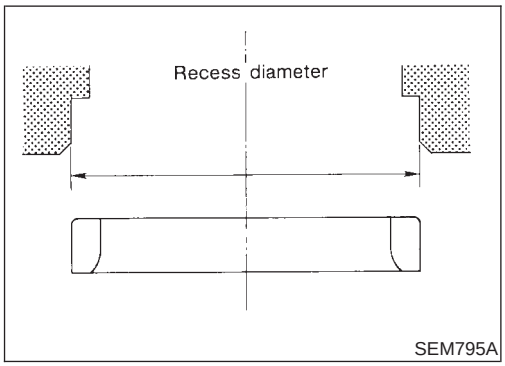

REPLACING VALVE SEAT FOR SERVICE PARTS

NJEM0065S11

1. Bore out old seat until it collapses. Boring should not continue beyond the bottom face of the seat recess in cylinder head. Set the machine depth stop to ensure this.
2. Ream cylinder head recess for service valve seat.

   Oversize [0.5 mm (0.020 in)]:

   Intake 30.500 - 30.516 mm (1.2008 - 1.2014 in)

   Exhaust 29.500 - 29.516 mm (1.1614 - 1.1620 in)

   Be sure to ream in circles concentric to the valve guide center.
   This will enable valve seat to fit correctly.

Intake

Unit: mm (in)

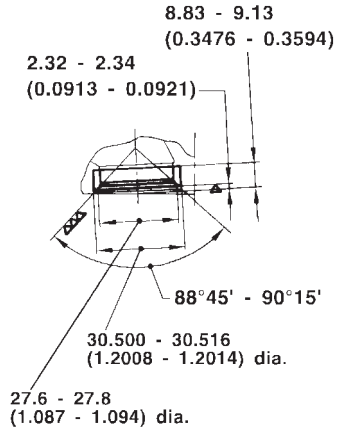

JEM158G

Exhaust

Unit: mm (in)

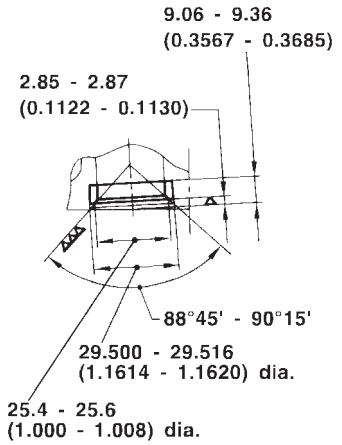

SEM301G

3. Heat cylinder head to 110 to 120°C (230 to 248°F) by soaking in heated oil.
4. Sufficiently cool valve seat with dry ice. Force fit valve seat into cylinder head.

WARNING:

Do not touch cold valve seat with your bare hands.

5. Cut or grind valve seat using suitable tool to the specified dimensions as shown in SDS (EM-164).

CAUTION:

Use the valve seat cutter properly. Securely gripping the cutter handle with both hands, press the cutter down onto the entire circumference of the contacting surface and finish cutting at one time. Improper pressing of the cutter or cutting in several steps may result in staged surface on the valve seat.

6. After cutting, lap valve seat with abrasive compound.
7. Check valve seating condition. Refer to EM-126, "Valve Seats".

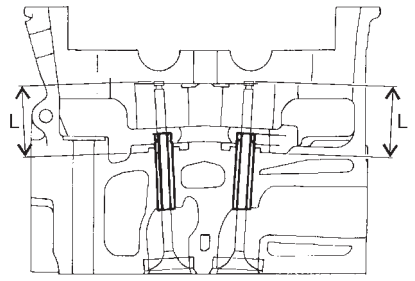

JEM253G

8. Use a depth gauge to measure the distance between the mounting surface of the cylinder head spring seat and the valve stem end. If the distance is shorter than specified, repeat step 5 above to adjust it. If it is longer, replace the valve seat with a new one.

Valve seat resurface limit "L":

Intake 36.53 - 36.98 mm (1.4382 - 1.4559 in)

Exhaust 36.53 - 37.01 mm (1.4382 - 1.4571 in)

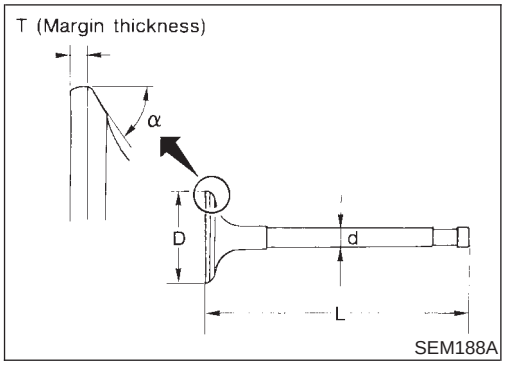

SEM188A

VALVE DIMENSIONS

NJEM0065S12

Check dimensions of each valve. For dimensions, refer to SDS (EM-161).

When valve head has been worn down to 0.5 mm (0.020 in) in margin thickness, replace valve.

Grinding allowance for valve stem tip is 0.2 mm (0.008 in) or less.

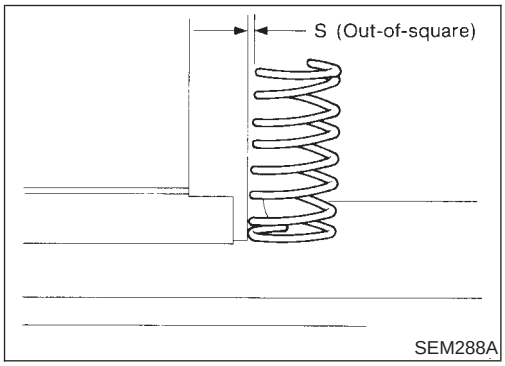

SEM288A

VALVE SPRING

NJEM0065S13

Squareness

NJEM0065S1301

1. Measure dimension "S".

   Out-of-square "S":

   For Sedan

   Limit 2.1 mm (0.083 in)

   For Hatchback

   Limit 1.5 mm (0.059 in)

2. If it exceeds the limit, replace spring.

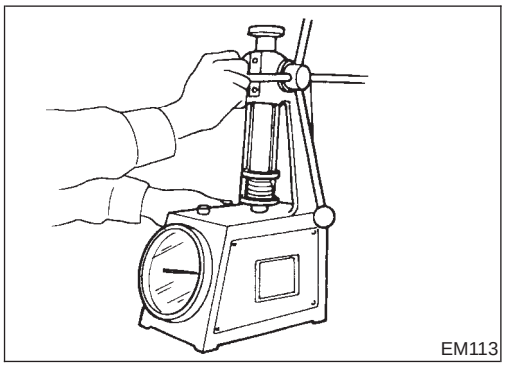
EM113

Pressure

NJEM0065S1302

Check valve spring pressure at specified spring height.

For Sedan

Standard:

Installation height 32.82 mm (1.2921 in)

Installation load 166 - 188 N (16.93 - 19.17 kg, 37.3 - 42.2 lb)

Height during valve open 24.82 mm (0.9772 in)

Load with valve open 345 - 376 N (35.18 - 38.34 kg, 77.5 - 84.5 lb)

For Hatchback

Standard:

Installation height 32.82 mm (1.2921 in)

Installation load 168 - 186 N (17.13 - 18.97 kg, 37.8 - 41.8 lb)

Height during valve open 24.82 mm (0.9772 in)

Load with valve open 350 - 382 N (35.7 - 37.9 kg, 78.7 - 83.6 lb)

If it exceeds the standard, replace spring.

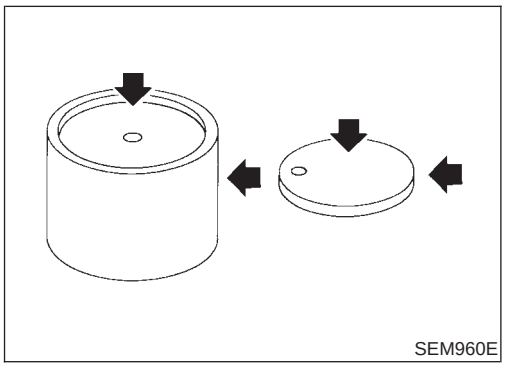
SEM960E

VALVE LIFTER

NJEM0065S14

1. Check contact and sliding surfaces for wear or scratches.

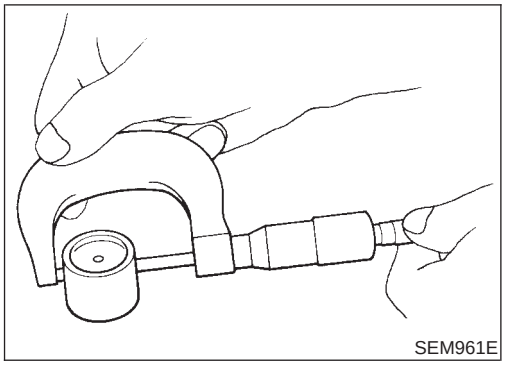
SEM961E

2. Check diameter of valve lifter and valve lifter guide bore.

Valve lifter outer diameter:
29.960 - 29.975 mm (1.1795 - 1.1801 in)

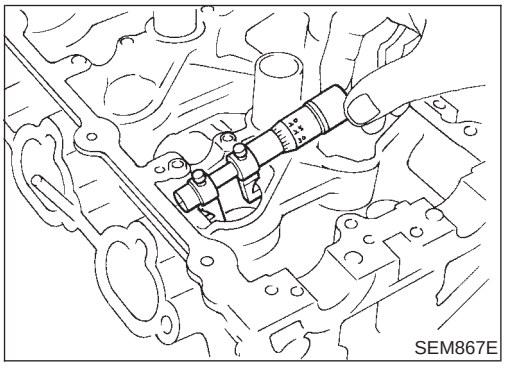
SEM867E

Lifter guide bore diameter:
30.000 - 30.021 mm (1.1811 - 1.1819 in)
Clearance between lifter and lifter guide:
Standard 0.025 - 0.061 mm (0.0010 - 0.0024 in)

- If the value is out of the range, replace valve lifter and/or cylinder head, referring to the specified values for the outer diameter and bore diameter.

Assembly

NJEM0066

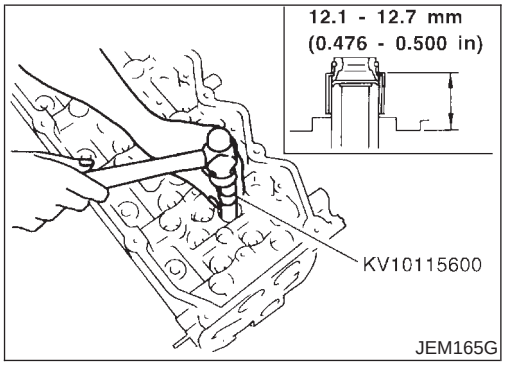

JEM165G

1. Install valve oil seal.
- Using valve oil seal drift (SST), install so that the dimension shown in the figure is obtained. The dimension in the figure shows the dimension before the valve spring seat is installed.
- Different parts should be used depending on the valve oil seal location. Identify by the rubber color.

For intake: Black
For exhaust: Brown

- **Always use new valve oil seal.**
- **Before installing valve oil seal, install valve spring seat.**

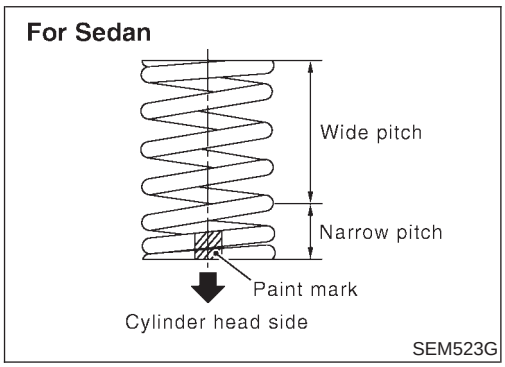

SEM523G

2. Install other valve component parts. Refer to "Disassembly", EM-121.
- **For uneven pitch type models only, install valve spring with its narrow pitch side toward cylinder head side (paint mark).**
- After installing valve collets, tap valve stem tip with plastic hammer to assure a proper fit.

Installation

NJEM0067

- **Before installation, remove old liquid gasket from mating surface of all liquid gasket applied parts.**

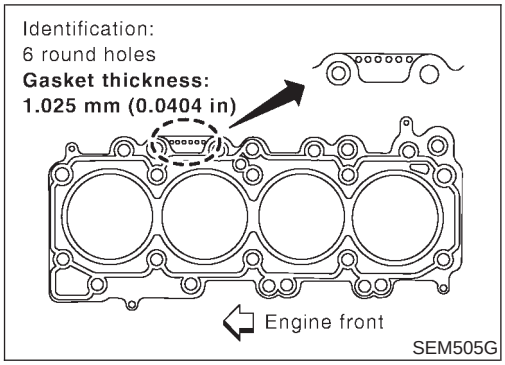

CYLINDER HEAD GASKET SELECTION

NJEM0067S01

- Select and install cylinder head gasket with appropriate thickness according to the following procedure:

When replacing gasket alone:

- Install a gasket with the same thickness as that of the one removed.
- Identify the thickness of gasket by the number of holes on the RH side.

Gasket thickness* mm (in)	Number of holes
0.900 (0.0354)	1
0.925 (0.0364)	2
0.950 (0.0374)	3
0.975 (0.0384)	4
1.000 (0.0394)	5
1.025 (0.0404)	6

*: Measured with head bolts tightened

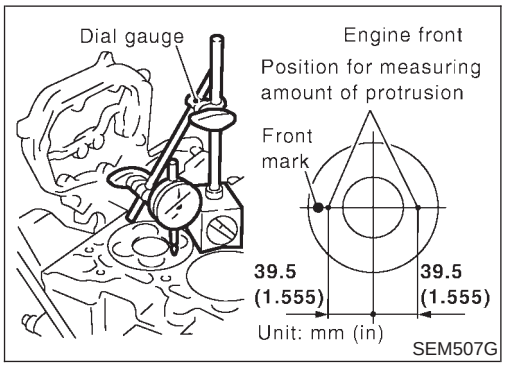

When the following parts have been repaired/replaced:

- With cylinder block upper surface and/or crankshaft pin journal ground
- With cylinder block, pistons, connecting rods, and/or crankshaft replaced

1. Set piston at a point close to TDC.
2. Set a dial gauge at the location as shown in the figure. Turning crankshaft gradually, set the gauge scale to "0" where the piston protrusion is maximized.
3. Move the dial gauge stand so that the tip of dial gauge can contact the cylinder block. Read the difference.
4. Measure at two locations per cylinder, that is eight locations for four cylinders. Select gasket based on the maximum protrusion of eight measurements.
5. Measure front and rear at two locations for each cylinder and calculate the mean value.
   Among the four measured points for each cylinder, determine the maximum protrusion value as the engine's piston protrusion value, and select and install a head gasket according to the value.

- This SELECTION has been discontinued since June, 2000.

Piston protrusion mm (in)	Gasket thickness* mm (in)	Identification
		Number of holes
Less than 0.255 (0.0100)	0.900 (0.0354)	1
Less than 0.255 - 0.280 (0.0100 - 0.0110)	0.925 (0.0364)	2
Less than 0.280 - 0.305 (0.0110 - 0.0120)	0.950 (0.0374)	3
Less than 0.305 - 0.330 (0.0120 - 0.0130)	0.975 (0.0384)	4

Piston protrusion mm (in)	Gasket thickness* mm (in)	Identification
		Number of holes
Less than 0.330 - 0.355 (0.0130 - 0.0140)	1.000 (0.0394)	5
More than 0.355 (0.0140)	1.025 (0.0404)	6

*: Measured with head bolts tightened

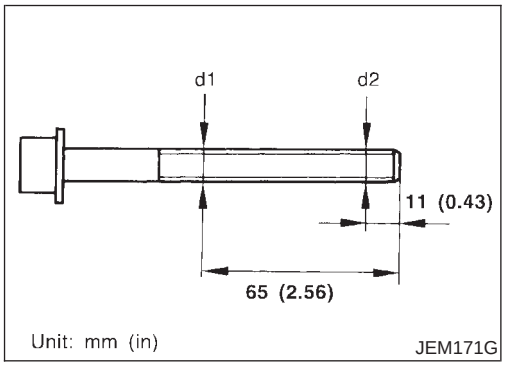

CYLINDER HEAD BOLT DEFORMATION CHECK

NJEM0067S02

- Measure the outer diameter of threaded area, d1 and d2, at the points specified in the figure.
- When the necked point is identified at a point other than specified points, measure at the point as d1.
- Calculate the difference between d1 and d2. If the value exceeds the limit, replace with new ones.

  Limit: 0.15 mm (0.0059 in)

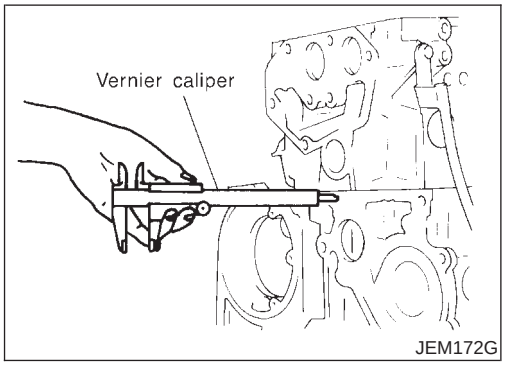

CYLINDER HEAD-TO-BLOCK DIFFERENCE CHECK

NJEM0067S03

- After installing cylinder head, measure dimension from the front end surface of cylinder block to that of cylinder head.

  Standard: 23.53 - 24.07 mm (0.9264 - 0.9476 in)
- If the difference is out of the range, check fitting of dowel pins and cylinder head.

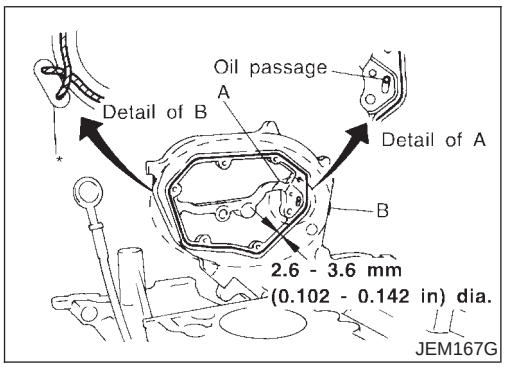

LIQUID GASKET APPLICATION ON REAR CHAIN CASE

NJEM0067S04

Apply a continuous bead of specified liquid gasket (Refer to EM-77, "Liquid Gasket Application Procedure".) on the surface shown in the figure.

A: Apply bead so that it does not protrude into oil passage.

B: Minimize the overlapping area of the bead, with start and end areas of bead as shown in the figure.

Apply so that the portion marked * comes at an external location but cannot be viewed externally after engine is assembled.

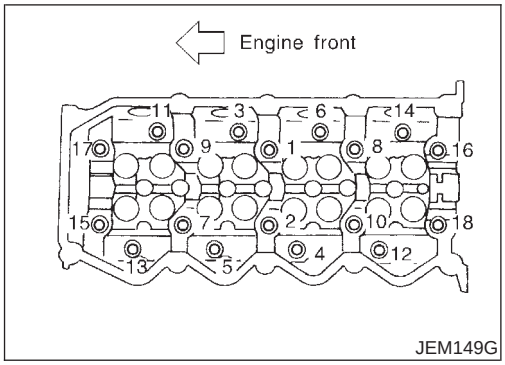

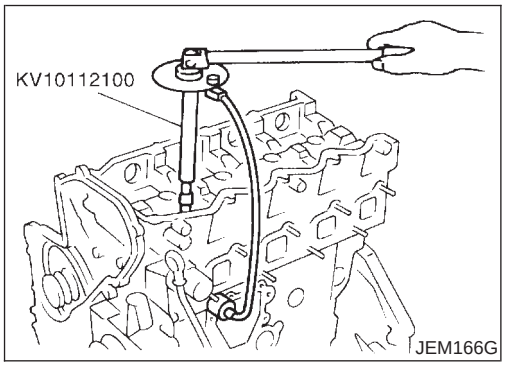

CYLINDER HEAD INSTALLATION

NJEM0067S05

- Tighten bolts in numerical order as shown in the figure according to the following procedure:

1. Apply engine oil to bolt threads and seat surfaces.
2. Tighten bolts to 29 to 38 N·m (2.9 to 3.9 kg-m, 21 to 28 ft-lb).
3. Tighten 180° to 185° [target: 180°] (angular tightening).
4. Loosen completely to 0 N·m (0 kg-m, 0 in-lb) in the reverse order of that shown in the figure.
5. Tighten bolts to 35 to 44 N·m (3.5 to 4.5 kg-m, 26 to 32 ft-lb).
6. Tighten 90° to 95° [target: 90°] (angular tightening).
7. Tighten another 90° to 95° [target: 90°] (angular tightening).

- **When an angle wrench is not used, paint an alignment mark on the head of cylinder head bolt and cylinder head surface before tightening. Check the angle with a protractor.**

GLOW PLUG INSTALLATION

NJEM0067S06

- **To avoid damage, glow plugs should be removed only when required.**
- **Handle with care to avoid applying shock. (When dropped from approx. 100 mm (3.94 in) or higher, always replace with a new one.)**
- Before installing, remove carbon depositing on mounting hole of glow plug with a reamer.

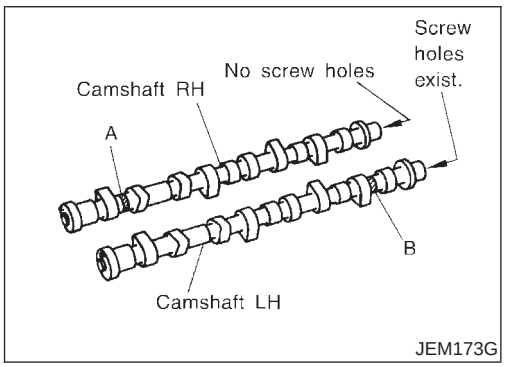

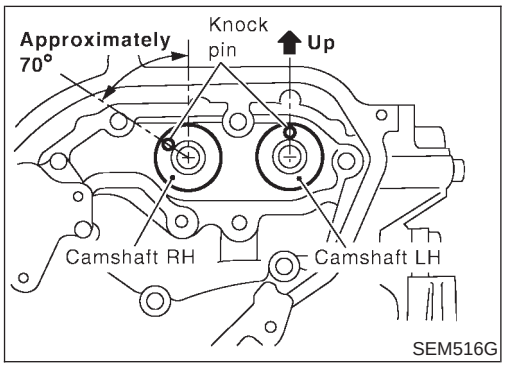

CAMSHAFT INSTALLATION

NJEM0067S07

1. Install valve lifters and adjusting shims.

- Install in the correct locations (the same places as before removal).

2. Install camshafts.

- Identify camshafts by the paint position and screw hole at the rear end.

Camshaft RH: Paint is at position A without screw hole.
Camshaft LH: Paint is at position B with screw hole.

- Install so that knock pins are positioned in the directions shown in the figure.

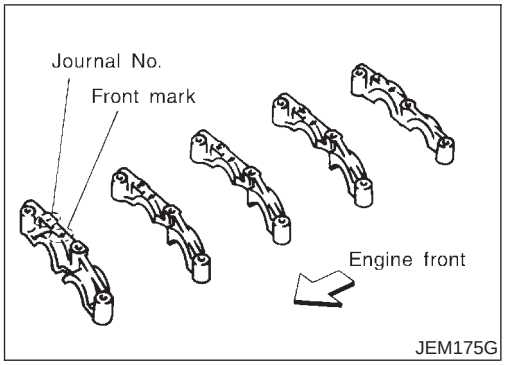

3. Install camshaft brackets.
- Install correctly, identifying brackets by the journal No. and front mark on top surface.

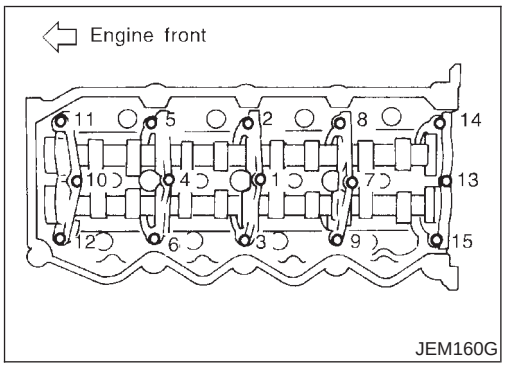

4. Tighten bolts in the order shown in the figure according to the following procedure:

a. Tighten to 2.0 N·m (0.2 kg-m, 17 in-lb).
- Make sure camshaft thrusting parts (on rear side) securely fit in their mating parts on the cylinder head.

b. Tighten to 6 N·m (0.6 kg-m, 52 in-lb).

c. Tighten to 12 to 13 N·m (1.2 to 1.4 kg-m, 9 to 10 ft-lb).

5. Install camshaft sprockets.
- Camshaft sprockets are commonly used for RH and LH.
- Align camshaft sprocket and dowel pin on camshaft, and install.
- Holding the hexagonal part of camshaft with a wrench, tighten bolt securing camshaft sprocket.

6. Before installing spill tube after installing secondary timing chain, check and adjust valve clearance. Refer to EM-133, "Valve Clearance".

7. Hereafter, install in the reverse order of removal.

Valve Clearance

NJEM0068

CHECKING

NJEM0068S01

Check valve clearance while engine is cold and not running.

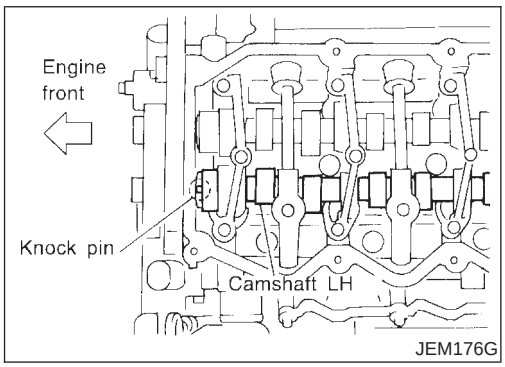

1. Set the No. 1 piston to TDC on its compression stroke.
- Turn crankshaft pulley clockwise so that the knock pin on camshaft LH faces straight above. (No position indicator, etc. is provided on the crankshaft pulley.)

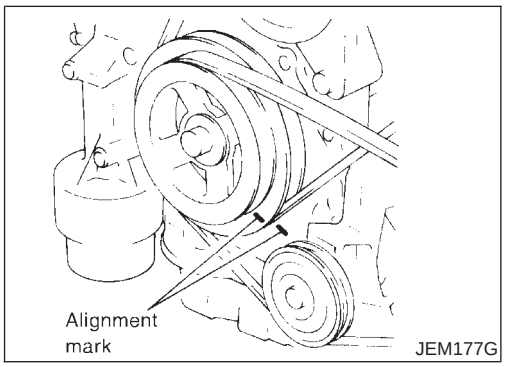

2. Put an alignment mark with paint, etc. on the crankshaft pulley and on the oil pump as an angle indicator.

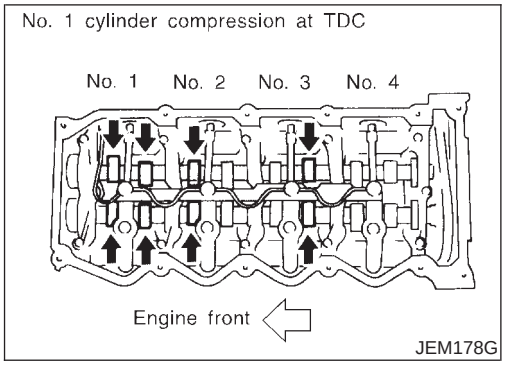

3. Check only those valves shown in the figure.

	Valve							
	No. 1		No. 2		No. 3		No. 4	
Crank position	INT	EXH	INT	EXH	INT	EXH	INT	EXH
No. 1 TDC (Compression stroke)	○	○	○			○		

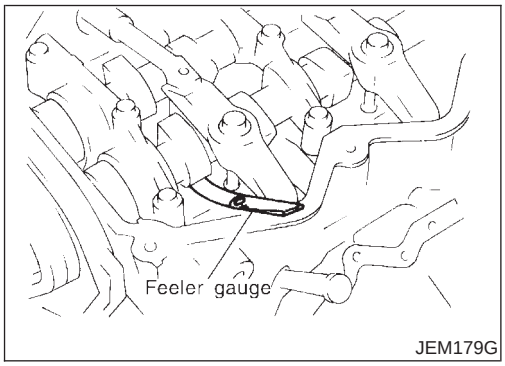

- Using a feeler gauge, measure clearance between valve lifter and camshaft.
- Record any valve clearance measurements which are out of specification. They will be used later to determine the required replacement adjusting shim.

Valve clearance for checking (Cold):

Intake

0.24 - 0.32 mm (0.0094 - 0.0126 in)

Exhaust

0.26 - 0.34 mm (0.0102 - 0.0134 in)

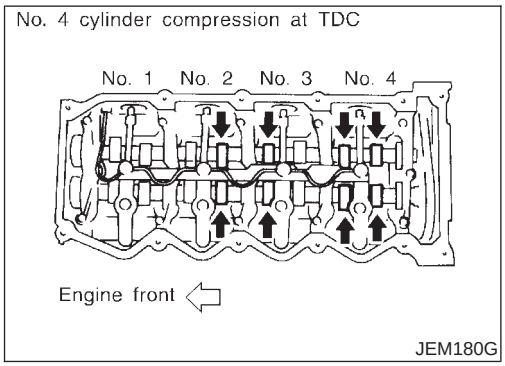

4. Rotate crankshaft clockwise by one turn to set the No. 4 piston to TDC on the compression stroke.
5. Check only those valves shown in the figure.

	Valve							
	No. 1		No. 2		No. 3		No. 4	
Crank position	INT	EXH	INT	EXH	INT	EXH	INT	EXH
No. 4 TDC (Compression stroke)				○	○		○	○

ADJUSTING

NJEM0068S02

Adjust valve clearance while engine is cold.

1. Turn crankshaft, to position cam lobe on camshaft of valve that must be adjusted upward.
2. Place Tool (A) around camshaft as shown in figure.
   Before placing Tool (A) (SST), rotate notch toward center of cylinder head (See figure.), to simplify shim removal later.

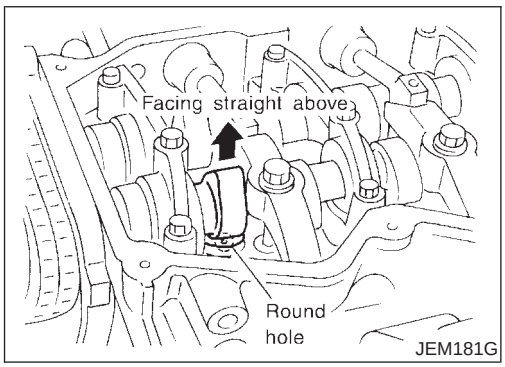

CAUTION:

Be careful not to damage cam surface with Tool (A).

3. Rotate Tool (A) (See figure.) so that valve lifter is pushed down.

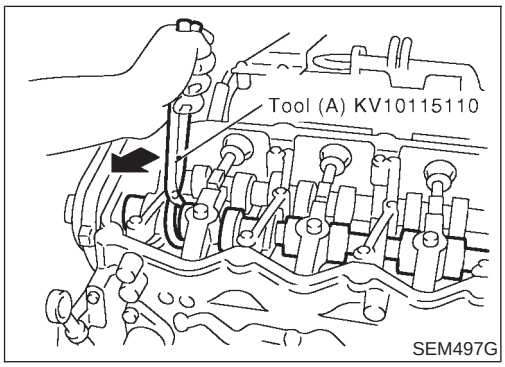

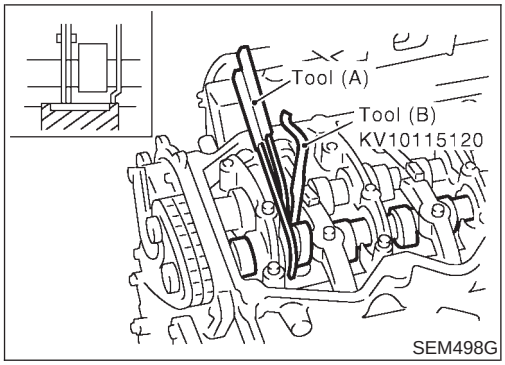

4. Place Tool (B) (SST) between camshaft and the edge of the valve lifter to retain valve lifter.

CAUTION:

- **Tool (B) must be placed as close to camshaft bracket as possible.**
- **Be careful not to damage cam surface with Tool (B).**

5. Remove Tool (A).

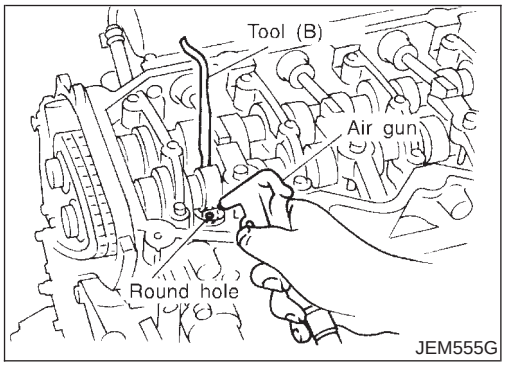

6. Blow air into the hole to separate adjusting shim from valve lifter.

- **To avoid engine oil spills, wipe off oil fully beforehand. Wear safety goggles, etc. during work if necessary.**

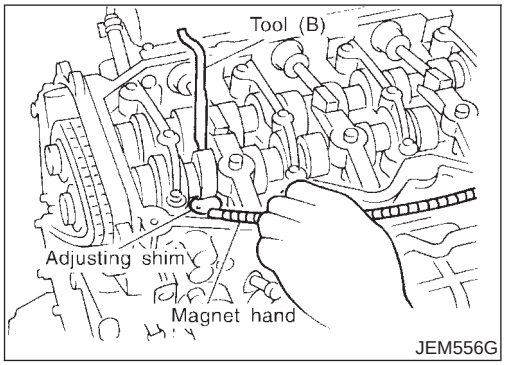

7. Remove adjusting shim using a small screwdriver and a magnetic finger.
8. Determine replacement adjusting shim size following formula.

- Using a micrometer determine thickness of removed shim.
- Calculate thickness of new adjusting shim so valve clearance comes within specified values.
  R = Thickness of removed shim
  N = Thickness of new shim
  M = Measured valve clearance

  Intake:

  N = R + [M − 0.28 mm (0.0110 in)]

  Exhaust:

  N = R + [M − 0.30 mm (0.0118 in)]

  Shims are available in 33 sizes from 2.10 mm (0.0827 in) to 2.74 mm (0.1079 in), in steps of 0.02 mm (0.0008 in).
- Select new shim with thickness as close as possible to calculated value.

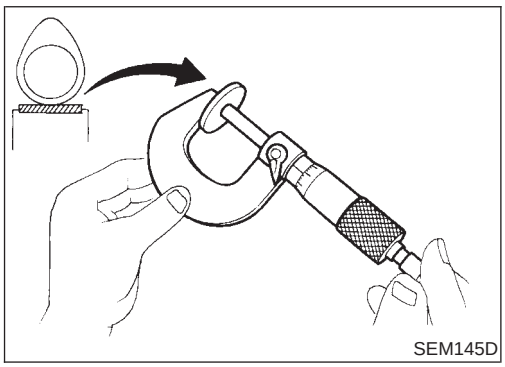

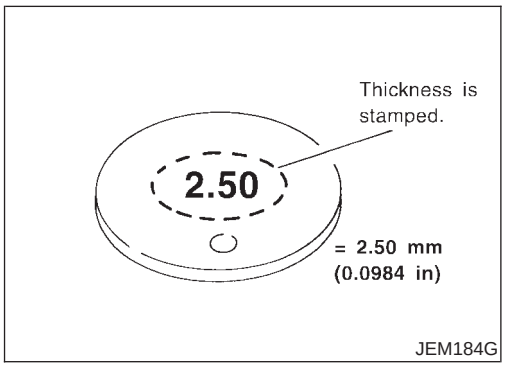

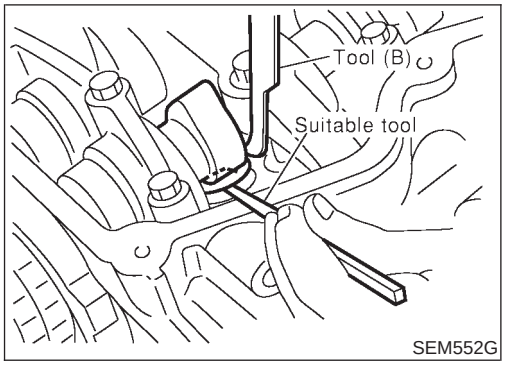

9. Install new shim using a suitable tool.
- **Install with the surface on which the thickness is stamped facing down.**

10. Place Tool (A) as mentioned in steps 2 and 3.
11. Remove Tool (B).
12. Remove Tool (A).
13. Recheck valve clearance.

Valve clearance:

Unit: mm (in)

	Cold	Hot* (reference data)
Intake	0.24 - 0.32 (0.009 - 0.013)	0.274 - 0.386 (0.011 - 0.015)
Exhaust	0.26 - 0.34 (0.010 - 0.013)	0.308 - 0.432 (0.012 - 0.017)

*: Approximately 80°C (176°F)

Removal and Installation

NJEM0069

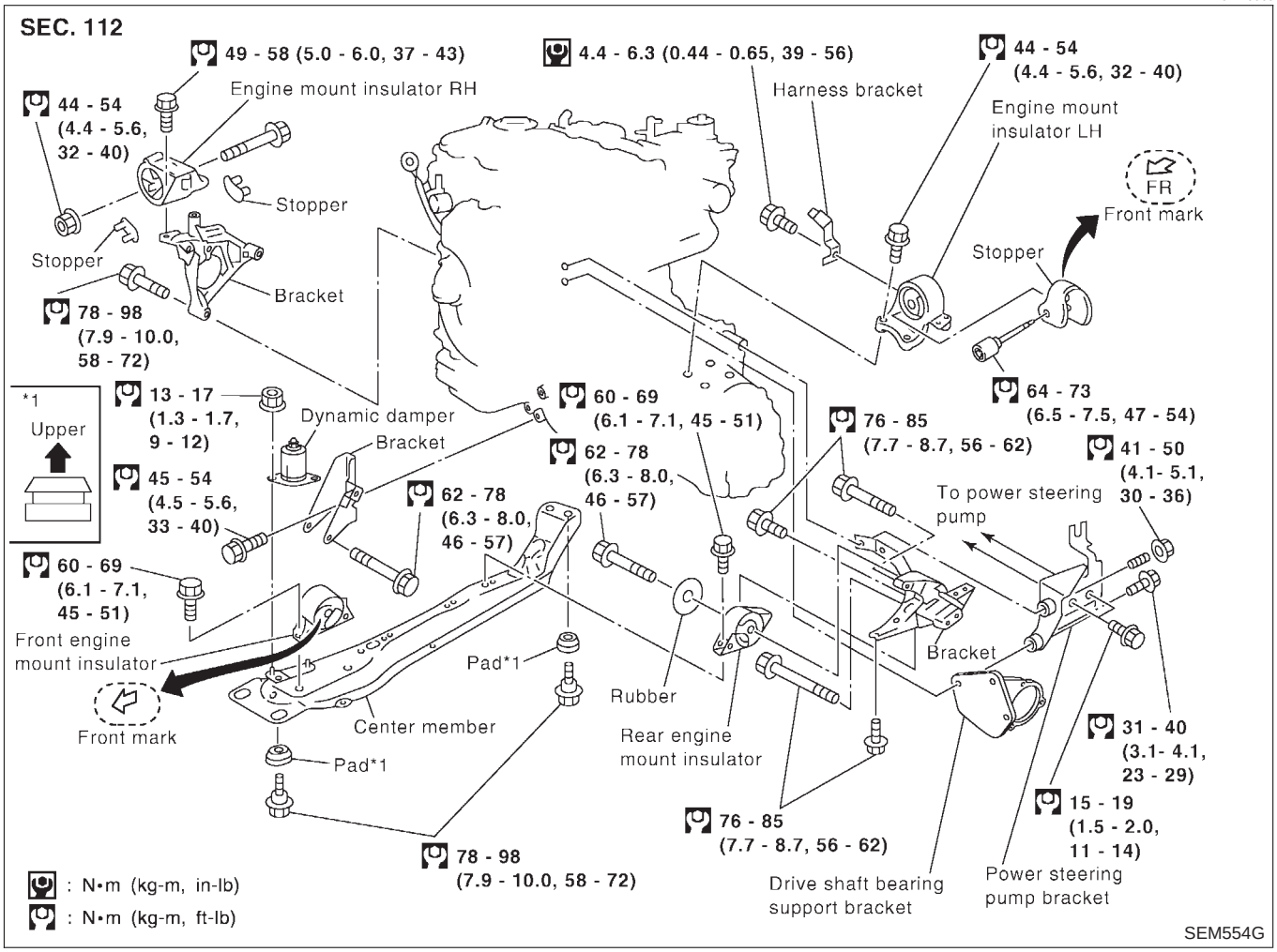

WARNING:

- **Situate vehicle on a flat and solid surface.**
- **Place chocks at front and back of rear wheels.**
- **Do not remove engine until exhaust system has completely cooled off. Otherwise, you may burn yourself and/or fire may break out in fuel line.**
- **For safety during subsequent steps, the tension of wires should be slackened against the engine.**
- **Before removing front axle from transaxle, place safety stands under designated front supporting points. Refer to GI-45, “Garage Jack and Safety Stand”.**
- **Be sure to hoist engine and transaxle in a safe manner.**
- **For engines not equipped with engine slingers, attach proper slingers and bolts described in PARTS CATALOG.**

CAUTION:

- **When lifting engine, be careful not to strike adjacent parts, especially the following: Accelerator wire casing, brake lines, and brake master cylinder.**
- **In hoisting the engine, always use engine slingers in a safe manner.**
- **In removing drive shaft, be careful not to damage grease seal of transaxle.**
- **Before separating engine and transaxle, remove the**

crankshaft position sensor (TDC sensor) from the assembly.

- **Always pay extra attention not to damage edge of crankshaft position sensor (TDC sensor) or ring gear teeth.**

REMOVAL

NJEM0069S01

1. Remove engine undercover, and hood for hoisting.
2. Drain coolant from both cylinder block and radiator. Refer to LC-44, "Changing Engine Coolant".
3. Remove the following parts:

- Battery
- RH and LH front wheels
- RH and LH splash covers (combined with undercover)
- Auxiliary belts
- Alternator
- Alternator brackets
- Radiator and cooling fan
- Engine cover
- Air ducts and air cleaner case

LH side of engine room:

4. Disconnect all harnesses and grounds that are connected to components on vehicle.
5. Disconnect vacuum hose on vacuum pump side.
6. Disconnect fuel feed and fuel return hoses on engine side.

- **Immediately put blind plugs into the openings to prevent fuel from flowing out.**

7. Disconnect heater hose. Plug opening of hose to prevent coolant from flowing out.

RH side of engine room:

8. Remove air conditioner compressor from brackets and move it toward vehicle side. Secure compressor on vehicle side with rope.

Vehicle underside:

9. Remove exhaust front tube.
10. Disconnect two hoses from power steering pump and plug to stop fluid.
11. Remove M/T control rod and support rod.
12. Remove ABS wheel sensor, and temporarily hang brake caliper with rope on vehicle side.
13. Remove RH and LH drive shafts.

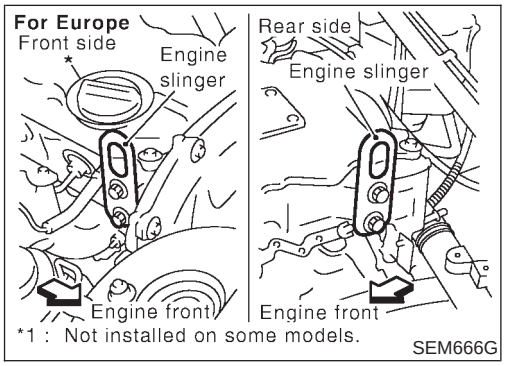

14. Install engine slingers to cylinder head.

    : 30 - 37 N·m (3.0 - 3.8 kg-m, 22 - 27 ft-lb)

- **Use engine slingers and securing bolts of the specified service parts.**

15. Lift up vehicle to appropriate level where work can be performed efficiently. Using two transmission jacks, securely support engine oil pan and bottom surface of transaxle.

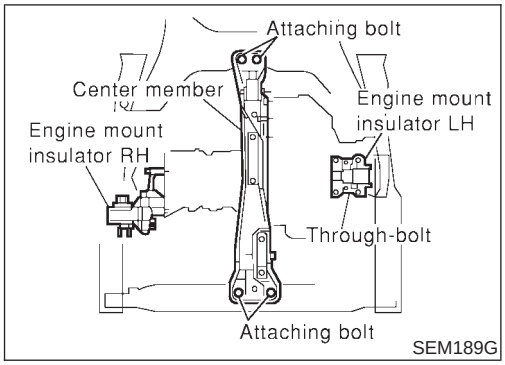

- **Make sure that support is stable with the use of safety blocks.**

16. Install hooks of lifting chain into engine slingers and tighten chain so that engine still remains on transmission jacks without being lifted up.
17. Remove engine mount insulator RH.
18. Remove through-bolt of engine mount insulator LH.
19. Remove bolts securing center member at front and rear.

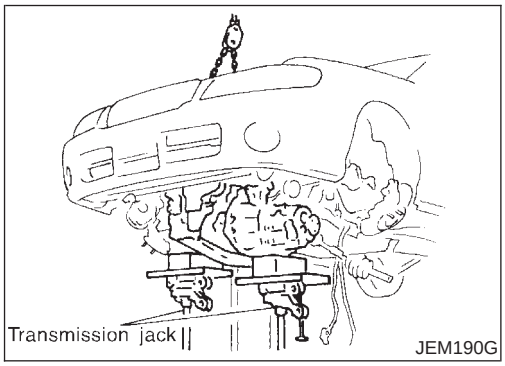

20. Carefully lower transmission jacks in accordance with the lowering pace of the hoist, and remove engine and transaxle assembly from vehicle.

- **While working, check that no parts of engine assembly interfere with adjacent parts on the vehicle.**
- **While working, make sure that parts requiring disconnection are not left connected, and that no parts interfere with vehicle.**
- **To prevent vehicle from falling down, perform operation carefully so that the center of gravity of the vehicle will not shift.**

21. Remove center member.

- **Before starting removal operation, first place the assembly on a level surface and securely support the bottom surface with wood blocks. Using a hoist, lift engine slingers, and make sure the assembly is stable.**

22. Separate engine and transaxle.

INSTALLATION

NJEM0069S02

Install in the reverse order of removal, observing the following:

- While installing, be careful to keep mount insulators free of oil smear and damage.
- When parts require specified installation directions/positions, install by using the identifying marks indicating up or front.
- While keeping the mount insulators free of twists or distortions, start tightening from the through-bolt on the engine mount insulator LH. This mount is used as the reference position.

Components

NJEM0070

SEC. 110•120•144•186

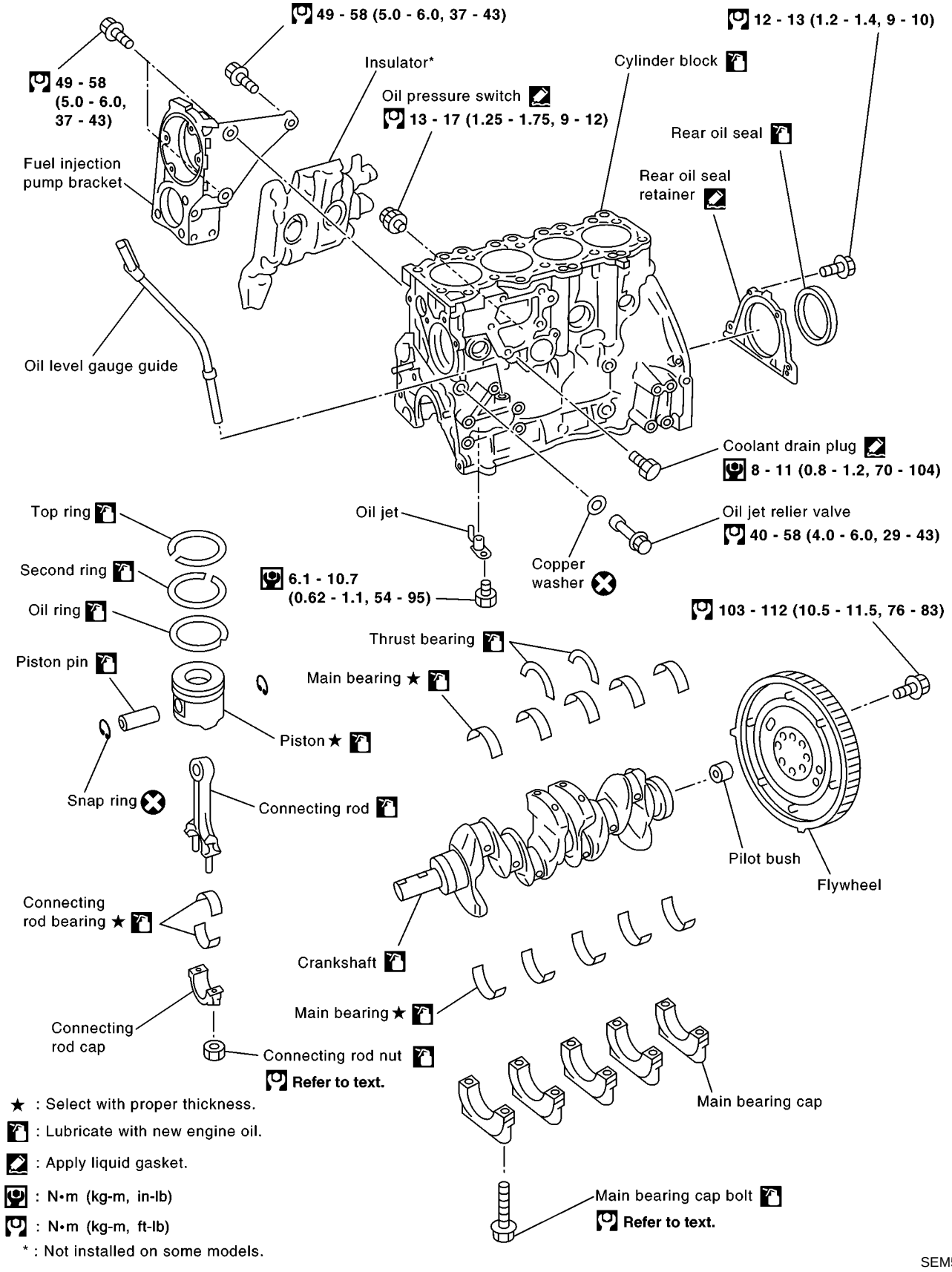

Removal and Installation

NJEM0071

CAUTION:

- **When installing bearings, pistons, or other sliding parts, lubricate contacting surfaces with new engine oil.**
- **Place removed parts such as bearings and bearing caps in their proper order and direction.**
- **When installing connecting rod nuts, and main bearing cap bolts, apply new engine oil to threads and seating surfaces.**
- **Do not allow any magnetic materials to contact the signal plate of flywheel.**
- **Do not remove the signal plate at back.**
- **Do not place the signal plate side facing under.**
- **Handle with care so as not to damage the signal plate [especially four places on protrusions for signal of crank position sensor (TDC sensor)].**

Disassembly

NJEM0072

PISTON AND CRANKSHAFT

NJEM0072S01

1. Remove engine. Refer to “ENGINE ASSEMBLY”, “Removal and Installation”, EM-137.
2. Place engine on a work stand.

a. Remove flywheel.

- Hold ring gear with ring gear stopper (KV10105630, KV10105610). Then, loosen securing bolts with TORX socket (size: Q8 E20, Commercial Service Tool) and remove them.
  As an alternative method, hold the crankshaft pulley with a pulley holder (SST) to remove the flywheel.

b. Install engine sub-attachment (SST) to rear surface of cylinder block.

- To install, align the hole on the sub-attachment with the knock pin on the cylinder block.
- The engine sub-attachment has five bolts.

c. Install engine attachment (SST).

- The four sets of bolts and nuts are multi-purpose products.

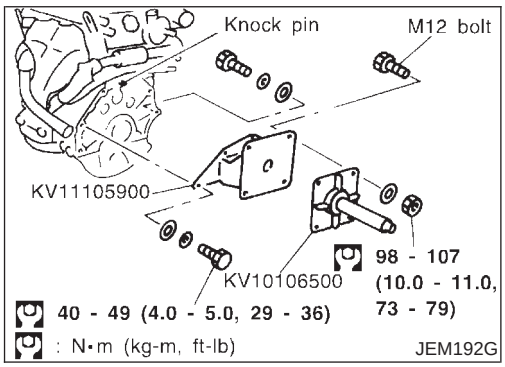

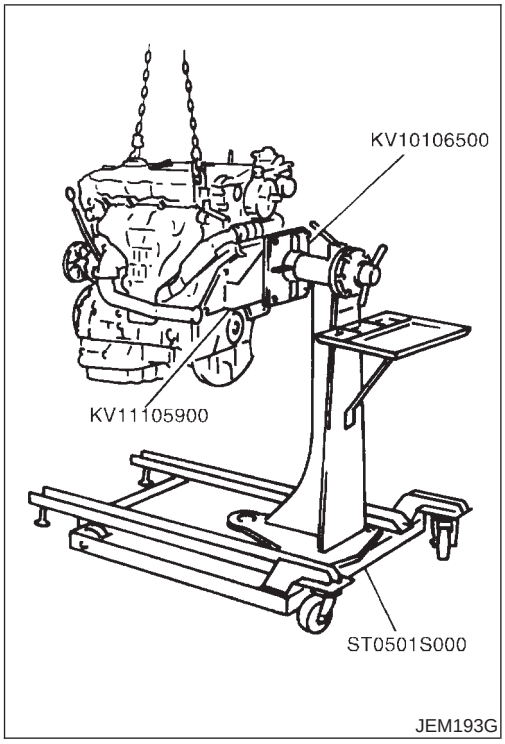

d. Hoist up engine and install it on the engine stand (SST).
- Another method is to set engine sub-attachment and engine attachment on engine stand beforehand, and then, install engine.

3. Drain engine oil and coolant from engine.
4. Remove the following and the associated parts:
- Exhaust manifold
- Turbocharger assembly
- Injection tube
- Intake manifold
- Oil pan (upper and lower)
- Secondary timing chain
- Fuel injection pump
- Primary timing chain
- Rocker cover
- High pressure injection nozzle assembly
- Camshaft
- Cylinder head
- Thermostat, water pipes
- Oil cooler
- Auxiliary component brackets

5. Remove fuel injection pump bracket.

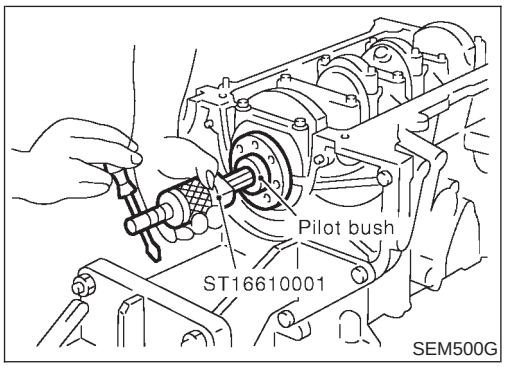

6. If the replacement of pilot bushing is necessary, remove it with pilot bushing puller (SST).
7. Remove rear oil seal retainer.
- Insert a flat-bladed screwdriver between main bearing cap and rear oil seal retainer to remove retainer.

8. Remove rear oil seal from rear oil seal retainer.
- Punch out with a flat-bladed screwdriver.
- **Be careful not to damage rear oil seal retainer.**

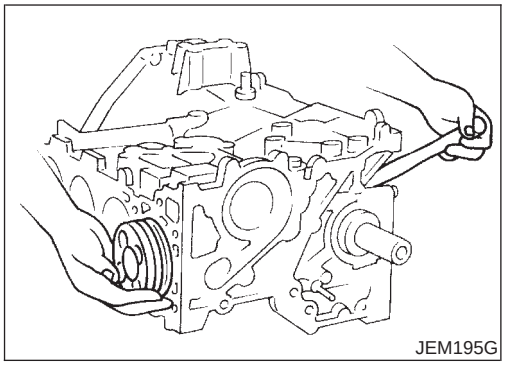

9. Remove piston and connecting rod assembly.

a. Set crankshaft pin of the removal location at a position close to BDC.
b. Remove connecting rod cap.
c. Push piston and connecting rod assembly toward cylinder head using a hammer handle.
- Before removing piston and connecting rod assembly, check connecting rod side clearance. Refer to EM-144, "CONNECTING ROD SIDE CLEARANCE".

10. Remove connecting rod bearings from connecting rod and connecting rod cap.

- Store the removed parts in sets by the cylinder No. to avoid mixing them up.

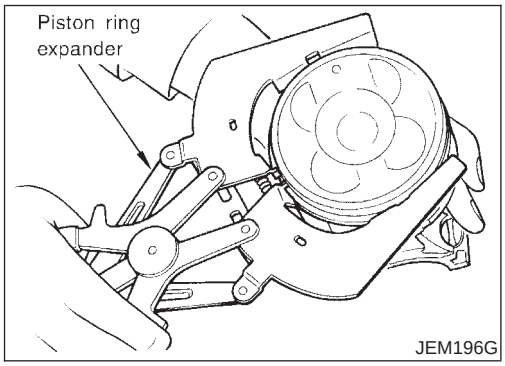

11. Remove piston rings from pistons.
- Use piston ring expander (Commercial Service Tool).
- **Avoid scratching pistons during removal.**
- **Be careful not to damage piston rings by expanding excessively.**

CAUTION:
- **When piston rings are not replaced, make sure that piston rings are mounted in their original positions.**

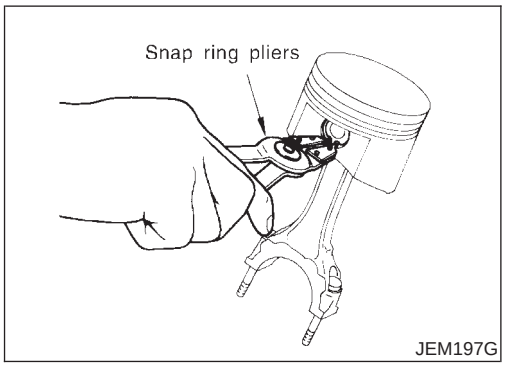

12. Remove piston from connecting rod.

a. Remove snap rings using snap ring pliers.

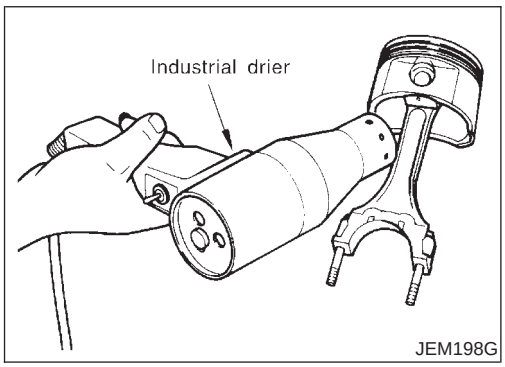

b. With an industrial drier, heat pistons to 60 to 70°C (140 to 158°F).

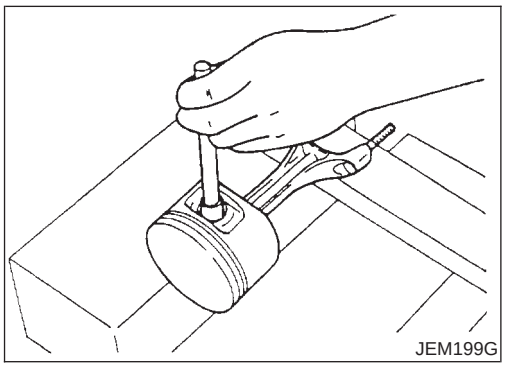

c. Push out piston pin with a rod approx. 26 mm (1.02 in) in diameter.

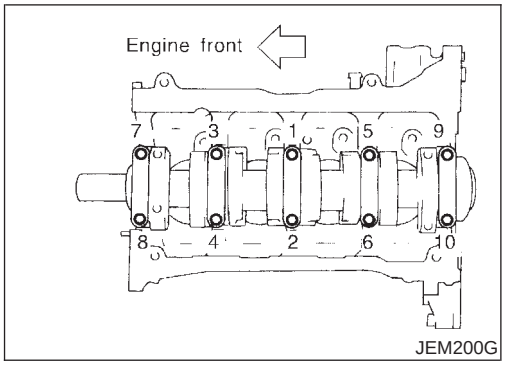

JEM200G

13. Remove main bearing cap bolts.
- With a TORX socket (size: E-14, Commercial Service Tool), loosen main bearing cap bolts in several stages in the reverse order of that shown in the figure and remove them.
- Before loosening main bearing cap bolts, measure crankshaft end play. Refer to EM-144, "CRANKSHAFT END PLAY".

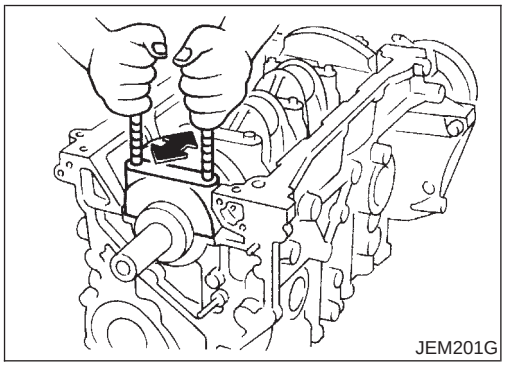
JEM201G

14. Remove main bearing caps.
- Using main bearing cap bolts, remove by rocking bearing cap back and forth.

15. Remove crankshaft.
16. Remove main bearings and thrust bearings from cylinder block and main bearing caps.
- **Check the correct installation locations of removed parts. Store them so they do not get mixed up.**

17. Remove oil jet.
18. Remove oil jet check valve.

Inspection

NJEM0073

CRANKSHAFT END PLAY

NJEM0073S13

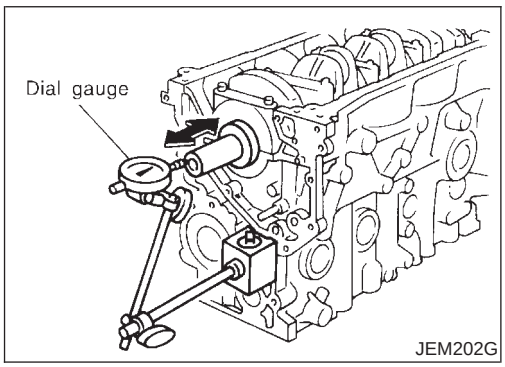

JEM202G

- Measure the moving distance of the crankshaft with the dial gauge when the crankshaft is moved fully forward or backward.

  Standard: 0.10 - 0.25 mm (0.0039 - 0.0098 in)
  Limit: 0.30 mm (0.0118 in)
- If the value exceeds the limit, replace thrust bearings with new ones and measure again. If the measurement exceeds the limit again, replace crankshaft with a new one.

CONNECTING ROD SIDE CLEARANCE

NJEM0073S14

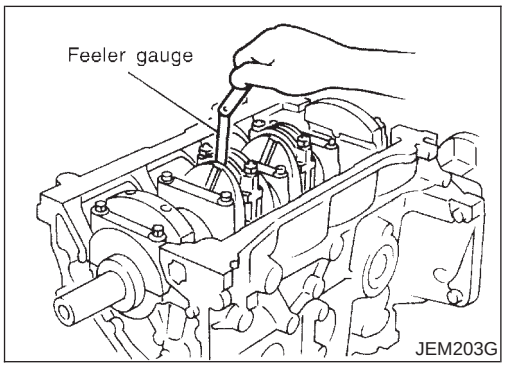

JEM203G

- Measure the side clearance between connecting rod and crank arm with feeler gauge.

  Standard: 0.200 - 0.350 mm (0.0079 - 0.0138 in)
  Limit: 0.4 mm (0.0157 in)
- If the value exceeds the limit, replace connecting rod and measure again. If the measurement exceeds the limit again, replace the crankshaft.

PISTON AND PISTON PIN CLEARANCE

NJEM0073S01

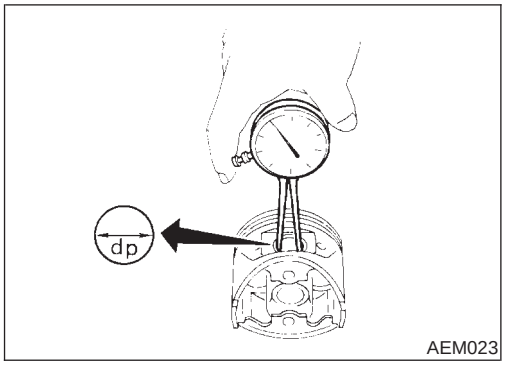

AEM023

1. Measure inner diameter of piston pin hole "dp".

   Standard diameter "dp":

   27.997 - 28.005 mm (1.1022 - 1.1026 in)

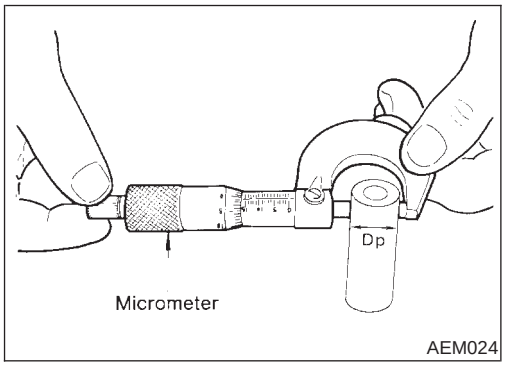

AEM024

2. Measure outer diameter of piston pin "Dp".

   Standard diameter "Dp":

   27.994 - 28.000 mm (1.1021 - 1.1024 in)

3. Calculate interference fit of piston pin to piston.

   Dp − dp = 0.002 - 0.006 mm (0.0001 - 0.0002 in)

If it exceeds the above value, replace piston assembly with pin.

PISTON RING SIDE CLEARANCE

NJEM0073S02

Side clearance:

Top ring

0.120 - 0.180 mm (0.0047 - 0.0071 in)

2nd ring

0.050 - 0.090 mm (0.0020 - 0.0035 in)

Oil ring

0.030 - 0.070 mm (0.0012 - 0.0028 in)

Max. limit of side clearance:

Top ring 0.2 mm (0.008 in)

2nd ring 0.1 mm (0.004 in)

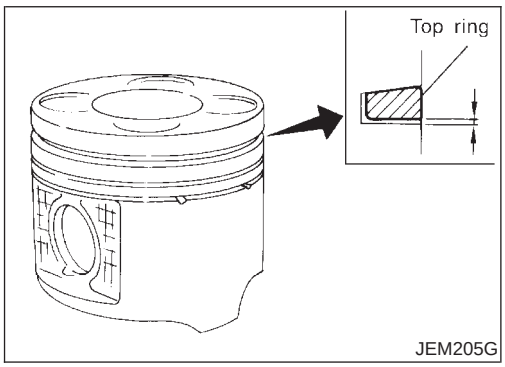

JEM205G

- To measure top ring side clearance, align the outer circumferences of the ring and piston while pressing ring upward against the upper surface of the ring groove. Under this condition, measure the clearance between ring and bottom surface of the ring groove.
- If out of specification, replace piston ring. If clearance exceeds maximum limit with new ring, replace piston.

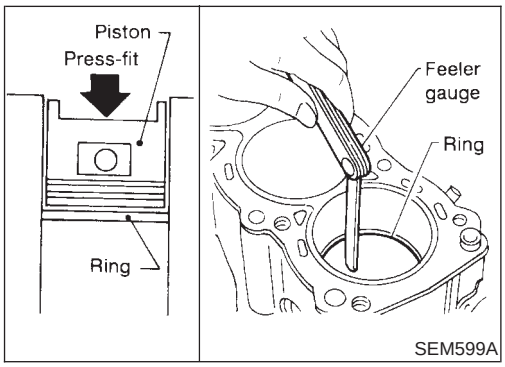

SEM599A

PISTON RING END GAP

NJEM0073S03

End gap:

Top ring 0.20 - 0.35 mm (0.0079 - 0.0138 in)

2nd ring 0.39 - 0.54 mm (0.0154 - 0.0213 in)

Oil ring 0.25 - 0.50 mm (0.0098 - 0.0197 in)

Max. limit of ring gap:

Top ring 1.0 mm (0.039 in)

2nd ring 1.0 mm (0.039 in)

Oil ring 1.0 mm (0.039 in)

If out of specification, replace piston ring. If gap still exceeds the limit even with a new ring, do the following. Rebore cylinder and use oversized piston and piston rings.
Refer to SDS (EM-167).

- When replacing the piston, check the cylinder block surface for scratches or seizure. If scratches or seizure is found, hone or replace the cylinder block.

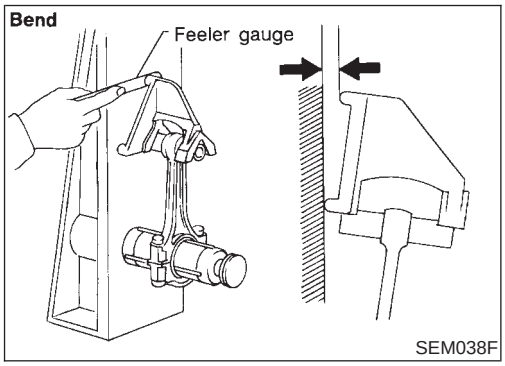

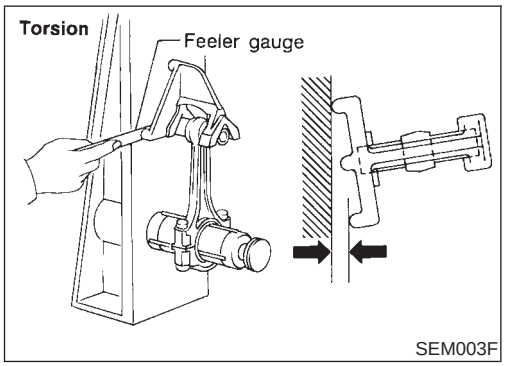

CONNECTING ROD BEND AND TORSION

NJEM0073S04

Bend:
Limit 0.12 mm (0.0047 in)
per 100 mm (3.94 in) length
Torsion:
Limit 0.12 mm (0.0047 in)
per 100 mm (3.94 in) length

If it exceeds the limit, replace connecting rod assembly.

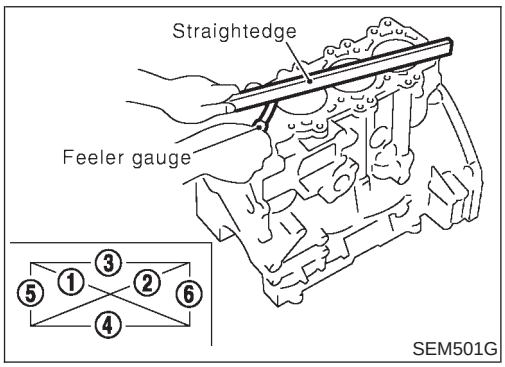

CYLINDER BLOCK DISTORTION AND WEAR

NJEM0073S05

- Clean upper surface of cylinder block.
  Use a reliable straightedge and feeler gauge to check the flatness of cylinder block surface.
  Check along six positions shown in the figure.
  Distortion limit: 0.04 mm (0.0016 in)
- If out of specification, resurface it. The limit for cylinder block resurfacing is determined by cylinder head resurfacing in engine.
  Resurfacing limit:
  Amount of cylinder head resurfacing is "A".
  Amount of cylinder block resurfacing is "B".
  The maximum limit is as follows:
  A + B = 0.07mm (0.0028 in)
  Nominal cylinder block height from crankshaft center:
  252.95 - 253.05 mm (9.9586 - 9.9626 in)
- If necessary, replace cylinder block.

PISTON-TO-BORE CLEARANCE

NJEM0073S06

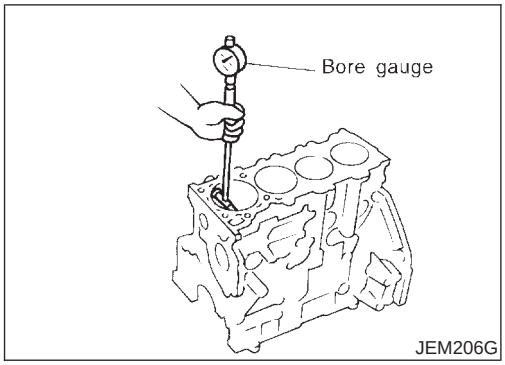

JEM206G

1. Using a bore gauge, measure cylinder bore in X and Y directions at A, B and C for wear, out-of-round and taper.

   Cylinder bore inner diameter:

   Standard

   86.000 - 86.030 mm (3.3858 - 3.3870 in)

   Wear limit

   0.20 mm (0.0079 in)

   If it exceeds the limit, rebore all cylinders. Replace cylinder block if necessary.

   Out-of-round (X − Y):

   Limit 0.015 mm (0.0006 in)

   Taper (A − B − C):

   Limit 0.010 mm (0.0004 in)

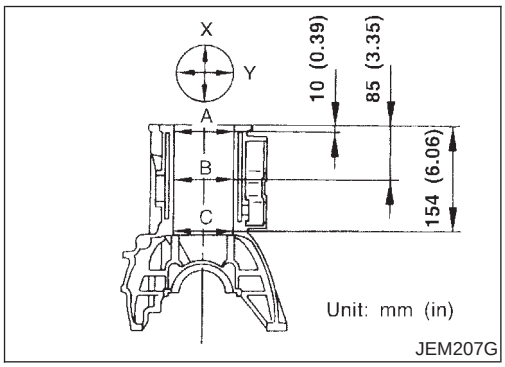

JEM207G

2. Check for scratches and seizure. If seizure is found, hone it.

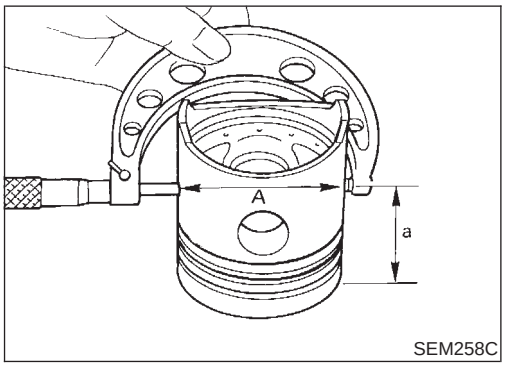

SEM258C

3. Measure piston skirt diameter.

   Piston diameter "A":

   Standard

   85.920 - 85.950 mm (3.3827 - 3.3839 in)

   Measuring point "a" (Distance from the top):

   58.0 mm (2.28 in)

4. Check that piston-to-bore clearance is within specification.

- Calculate the clearance by using outer diameter at piston skirt and inner diameter of cylinder (direction of X, point B):

  Piston-to-bore clearance = Cylinder bore – Piston diameter "A"

  Standard [at room temperature 20°C (68°F)]:

  0.070 - 0.090 mm (0.0028 - 0.0035 in)

- If the value is out of the specified range, replace piston and piston pin assembly.

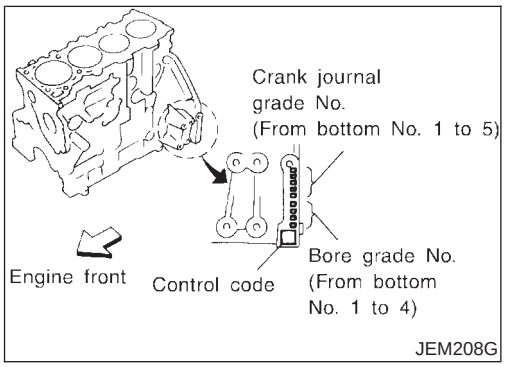

JEM208G

- If cylinder block or pistons are replaced with new ones, select piston as follows:

When using a new cylinder block:

- Identify the cylinder bore grade (No. 1, 2, or 3) on LH surface at the rear of cylinder block and select a piston of the same grade.
- The part No. of piston is specified together with the piston pin as an assembly.

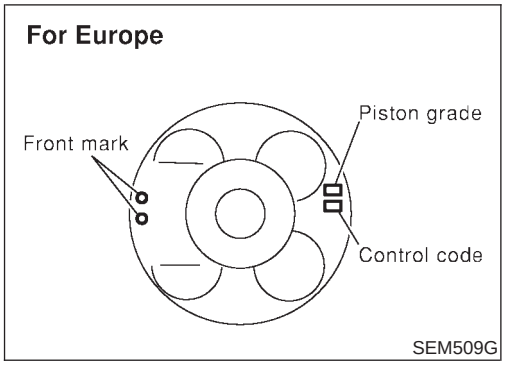

When re-using a removed cylinder block:

- Measure the inner diameter of the cylinder block bore.
- Determine the bore grade by comparing the measurement with the values under "Cylinder bore ID" of the table below. Choose a piston of the same grade.

Selective fitting for piston:

Unit: mm (in)

Grade (punched)	1	2	3
Cylinder bore ID	86.000 - 86.010 (3.3858 - 3.3862)	86.010 - 86.020 (3.3862 - 3.3866)	86.020 - 86.030 (3.3866 - 3.3870)
Piston OD	85.920 - 85.930 (3.3827 - 3.3831)	85.930 - 85.940 (3.3831 - 3.3835)	85.940 - 85.950 (3.3835 - 3.3839)

5. Determine piston oversize according to amount of cylinder wear.

- **For oversize pistons, 0.25 and 0.5OS [0.25 mm (0.0098 in), 0.5 mm (0.0197 in) oversize] are available as service parts. Refer to SDS, EM-167. When using an oversize piston, hone cylinder so that the clearance between piston and cylinder becomes the specified value. Be sure to use appropriate oversize piston ring for the oversize piston.**

6. Cylinder bore size is determined by adding piston-to-bore clearance to piston diameter "A".

Rebored size calculation: D = A + B − C

where,

D: Bored diameter

A: Piston diameter as measured

B: Piston-to-bore clearance

C: Honing allowance 0.02 mm (0.0008 in)

7. Cut cylinder bores.

- **When any cylinder needs boring, all other cylinders must also be bored.**
- **Do not cut too much out of cylinder bore at a time. Cut only 0.05 mm (0.0020 in) or so in diameter at a time.**

8. Hone cylinders to obtain specified piston-to-bore clearance.
9. Measure finished cylinder bore for out-of-round and taper.

- **Measurement should be done after cylinder bore cools down.**

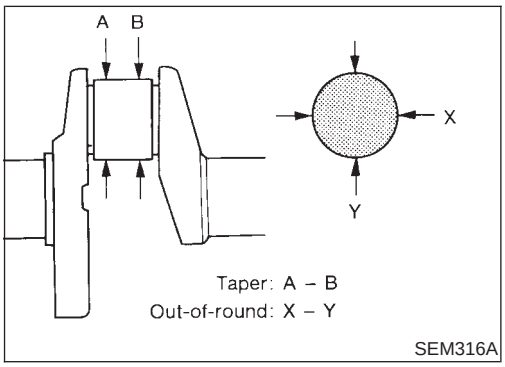

CRANKSHAFT

NJEM0073S07

1. Check crankshaft main and pin journals for score, wear or cracks.
2. With a micrometer, measure journals for taper and out-of-round.

Out-of-round (X − Y):

Standard

0.003 mm (0.0001 in)

Limit

0.005 mm (0.0002 in)

Taper (A − B):

Standard
0.003 mm (0.0001 in)
Limit
0.005 mm (0.0002 in)

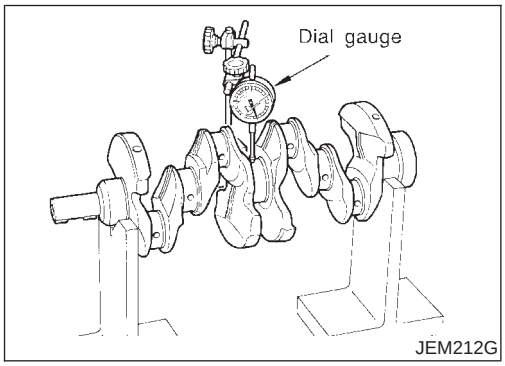

3. Measure crankshaft runout at No. 3 (center) journal.
   Runout (Total indicator reading):
   Standard 0.05 mm (0.0020 in)
   Limit 0.10 mm (0.0039 in)

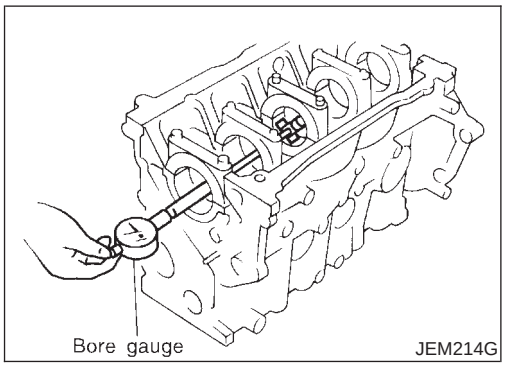

MAIN BEARING HOUSING INNER DIAMETER

NJEM0073S15

- Without installing main bearings, install main bearing caps, and tighten bolts to the specified torque.
- Measure the inner diameter of main bearing housing with a bore gauge.
  Standard:
  66.654 - 66.681 mm (2.6242 - 2.6252 in) dia.
- If the measurement is out of the specified range, replace cylinder block and main bearing caps.

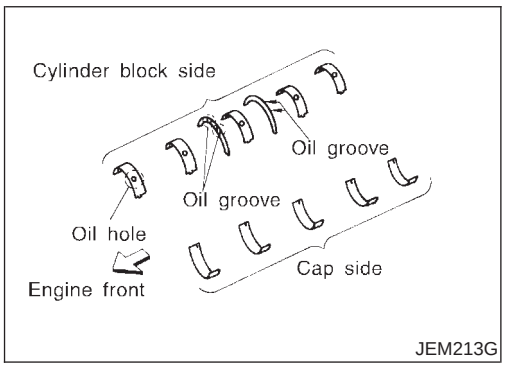

BEARING CLEARANCE

NJEM0073S08

- Use either of the following two methods, however, method "A" gives more reliable results and is preferable.

Method A (Using bore gauge & micrometer)

Main bearing

NJEM0073S0801

1. Install main bearings to the cylinder block and bearing cap, and tighten the bolts to the specified torque. Then, measure the inner diameter of the main bearings.
   Oil clearance = Bearing ID – Crankshaft journal OD
   Standard: 0.039 - 0.066 mm (0.0015 - 0.0026 in)
2. If the value is out of the specified range, select main bearings to obtain the specified oil clearance, based on the measurements of the main bearing housing inner diameter and crankshaft journal outer diameter.

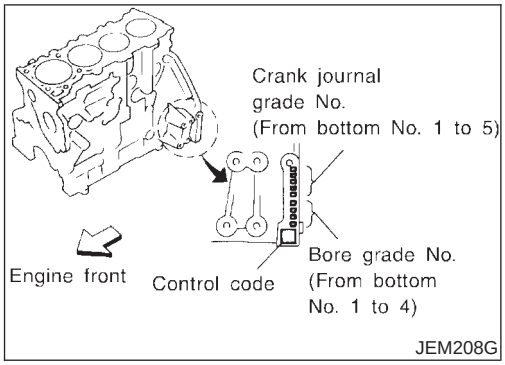

When using a new cylinder block and crankshaft:

1) Identify the bearing housing grade (No. 0, 1, or 2) on LH surface at the rear of the cylinder block, and locate the applicable grade on the "Grade" row in the table below.
2) Identify the journal grade (No. 0, 1, or 2) on the front surface of the crankshaft, and locate the applicable grade under the "Grade" column on the table.
3) The main bearing to be used (STD 0 to STD 4) can be located in the cell where the row and column cross.

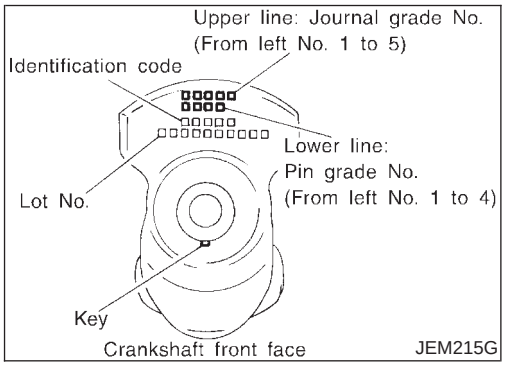

When re-using removed cylinder block and crankshaft:

1) Measure the inner diameter of cylinder block main bearing housing.
2) Locate the applicable cell where the measurement falls, on "Cylinder block main bearing housing ID" row on the table.
3) Measure the outer diameter of the crankshaft journal.
4) Locate the applicable cell where the measurement falls, under "Crankshaft journal OD" column on the table.
5) The main bearing to be used (STD 0 to STD 4) can be located in the cell where the row and column cross.

Selective fitting for main bearing

Unit: mm (in)

Cylinder block main bearing housing ID			66.654 - 66.663 (2.6242 - 2.6245)	66.663 - 66.672 (2.6245 - 2.6249)	66.672 - 66.681 (2.6249 - 2.6252)
Crankshaft journal OD	Grade (punched)		0	1	2
62.967 - 62.975 (2.4790 - 2.4793)	0	● Bearing grade No. ● Bearing thickness ● Oil clearance ● Identification color	STD 0 1.816 - 1.820 (0.0715 - 0.0717) 0.039 - 0.066 (0.0015 - 0.0026) Black	STD 1 1.820 - 1.824 (0.0717 - 0.0718) 0.039 - 0.066 (0.0015 - 0.0026) Red or Brown	STD 2 1.824 - 1.828 (0.0718 - 0.0720) 0.039 - 0.066 (0.0015 - 0.0026) Green
62.959 - 62.967 (2.4787 - 2.6790)	1	● Bearing grade No. ● Bearing thickness ● Oil clearance ● Identification color	STD 1 1.820 - 1.824 (0.0717 - 0.0718) 0.039 - 0.066 (0.0015 - 0.0026) Red or Brown	STD 2 1.824 - 1.828 (0.0718 - 0.0720) 0.039 - 0.066 (0.0015 - 0.0026) Green	STD 3 1.828 - 1.832 (0.0720 - 0.0721) 0.039 - 0.066 (0.0015 - 0.0026) Yellow
62.951 - 62.959 (2.4784 - 2.4787)	2	● Bearing grade No. ● Bearing thickness ● Oil clearance ● Identification color	STD 2 1.824 - 1.828 (0.0718 - 0.0720) 0.039 - 0.066 (0.0015 - 0.0026) Green	STD 3 1.828 - 1.832 (0.0720 - 0.0721) 0.039 - 0.066 (0.0015 - 0.0026) Yellow	STD 4 1.832 - 1.836 (0.0721 - 0.0723) 0.039 - 0.066 (0.0015 - 0.0026) Blue

3. When the specified oil clearance is not obtained with standard size main bearings, use undersized bearings.

- When an undersized bearing is used, measure the inner diameter of the bearing while the bearing is installed. Grind crankshaft journal so that the specified oil clearance is obtained.

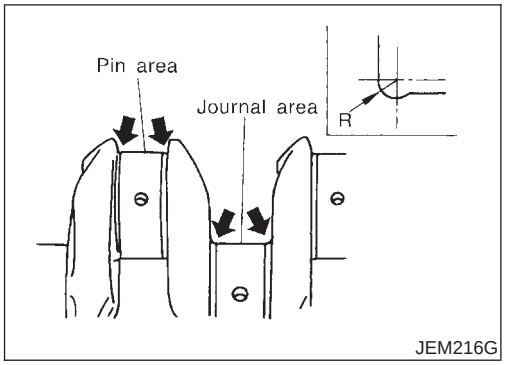

JEM216G

Undersize bearing

Unit: mm (in)

Size	Thickness
US 0.25 (0.0098)	1.949 - 1.953 (0.0767 - 0.0769)

CAUTION:
When grinding the crankshaft journal to use an undersize bearing, avoid damaging the fillet R.

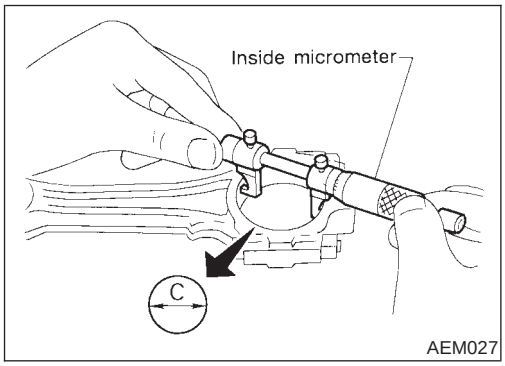

AEM027

Connecting Rod Bearing (Big end)

NJEM0073S0802

1. Install connecting rod bearing to connecting rod and cap.
2. Install connecting rod cap to connecting rod.
   Tighten bolts to the specified torque.
3. Measure inner diameter "C" of connecting rod.
   Inner diameter:
   Standard 55.000 - 55.013 mm (2.1654 - 2.1659 in)

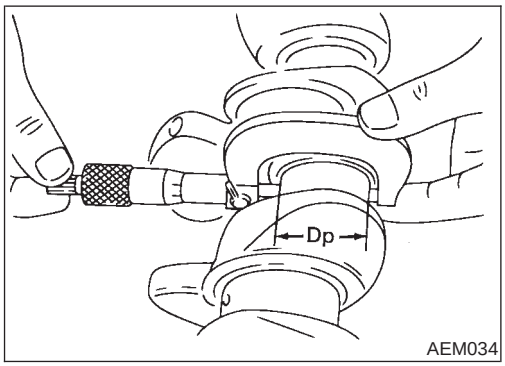

AEM034

4. Measure outer diameter "Dp" of each crankshaft pin journal.
5. Calculate connecting rod bearing clearance.
   Connecting rod bearing clearance = C − Dp
   Standard: 0.031 - 0.061 mm (0.0012 - 0.0024 in)
6. If it exceeds the standard, replace bearing.

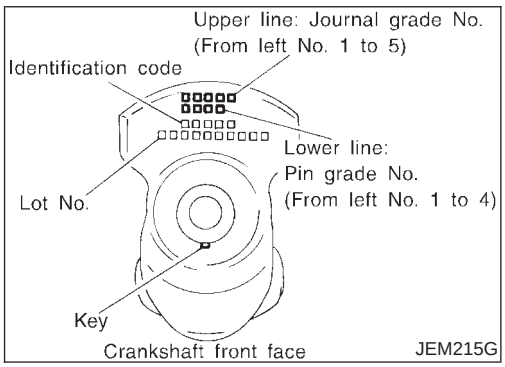

JEM215G

When using a new crankshaft and connecting rods:

- Identify the pin diameter grade (No. 0, 1, or 2) on front surface of crankshaft and select the connecting rod bearings of the same grade.
- There is no grading for the inner diameter of the big end of the connecting rod.

When re-using the removed crankshaft and connecting rods:

- Measure the inner diameter of the big end of the connecting rod and make sure it is within the specified range.
- Measure the outer diameter of the crankshaft pin.
- Determine the crankshaft pin grade by comparing the measurement with the values under the column "Crankshaft pin OD" of the table below. Choose the bearings of the same grade.

Selective fitting for connecting rod bearing

Unit: mm (in)

Connecting rod big end ID		55.000 - 55.013 (2.1654 - 2.1659)	
Crankshaft pin OD	Grade (punched)	0 (no punching)	
51.968 - 51.974 (2.0460 - 2.0462)	0	● Bearing grade No. ● Bearing thickness ● Oil clearance ● Identification color	STD 0 1.492 - 1.496 (0.0587 - 0.0589) 0.031 - 0.061 (0.0012 - 0.0024) Black
51.961 - 51.968 (2.0457 - 2.0460)	1	● Bearing grade No. ● Bearing thickness ● Oil clearance ● Identification color	STD 1 1.496 - 1.500 (0.0589 - 0.0591) 0.031 - 0.061 (0.0012 - 0.0024) Brown
51.954 - 51.961 (2.0454 - 2.0457)	2	● Bearing grade No. ● Bearing thickness ● Oil clearance ● Identification color	STD 2 1.500 - 1.504 (0.0591 - 0.0592) 0.031 - 0.061 (0.0012 - 0.0024) Green

7. If clearance cannot be adjusted within the standard of any bearing, grind crankshaft journal and use undersized bearing.

- When an undersized bearing is used, measure the inner diameter of the bearing while the bearing is installed. Grind the pins so that the specified oil clearance is obtained.

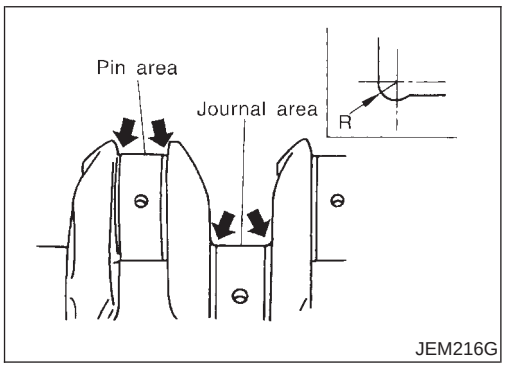

Undersize bearing

Unit: mm (in)

Size	Thickness
US 0.08 (0.0031)	1.536 - 1.540 (0.0605 - 0.0606)
US 0.12 (0.0047)	1.556 - 1.560 (0.0613 - 0.0614)
US 0.25 (0.0098)	1.621 - 1.625 (0.0638 - 0.0640)

CAUTION:

When grinding the crankshaft journal to use an undersize bearing, avoid damaging the fillet R.

Standard dimension R:

1.5 - 1.7 mm (0.0591 - 0.0669 in)

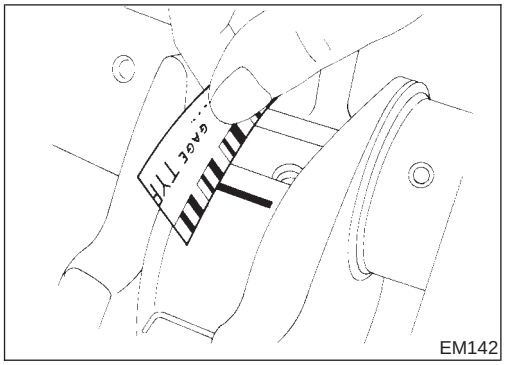

EM142

Method B (Using plastigage)

CAUTION:

- **Do not turn crankshaft or connecting rod while plastigage is being inserted.**
- **When bearing clearance exceeds the specified limit, ensure that the proper bearing has been installed. If incorrect bearing clearance exists, use a thicker or undersized main bearing to ensure specified clearance.**

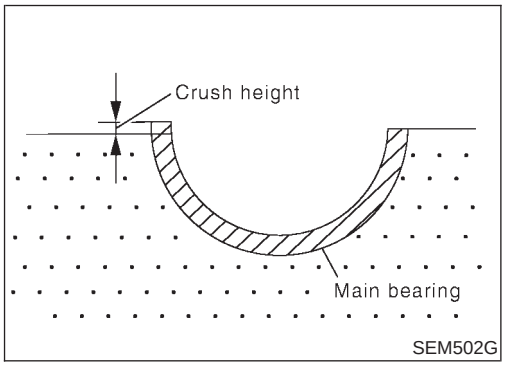

SEM502G

MAIN BEARING CRUSH HEIGHT

NJEM0073S16

- When the bearing cap is removed after being tightened to the specified torque with main bearings installed, the tip end of bearing must protrude.

  Standard: There must be crush height.
- If the standard is not met, replace main bearings.

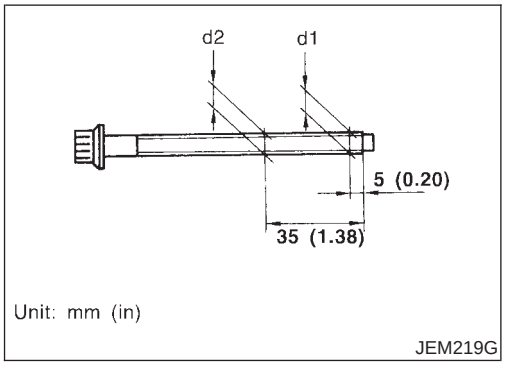

JEM219G

MAIN BEARING CAP BOLT DEFORMATION

NJEM0073S17

- Measure the outer diameter of threaded area, d1 and d2, at the points specified in the figure.
- When the necked point is identified at a point other than where specified, measure at the point as d2.
- Calculate the difference between d1 and d2.

  Limit: 0.13 mm (0.0051 in)

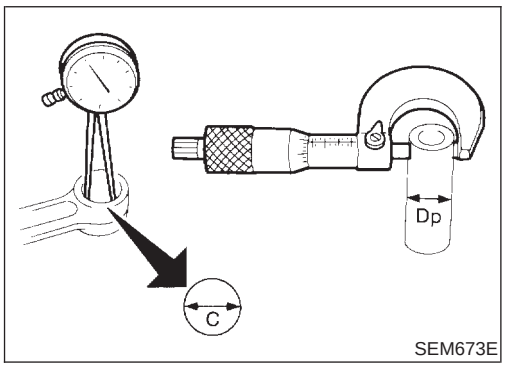

SEM673E

CONNECTING ROD BUSHING CLEARANCE (SMALL END)

NJEM0073S09

1. Measure inner diameter "C" of bushing.

   Inner diameter "C":

   Standard 28.026 - 28.038 mm (1.1034 - 1.1039 in)
2. Measure outer diameter "Dp" of piston pin.

   Outer diameter "Dp":

   Standard 27.994 - 28.000 mm (1.1021 - 1.1024 in)
3. Calculate connecting rod bushing clearance.

   Connecting rod bushing clearance = C − Dp

   Standard: 0.026 - 0.044 mm (0.0010 - 0.0017 in)

   Limit: 0.057 mm (0.0022 in)

   If it exceeds the limit, replace connecting rod assembly and/or piston set with pin.

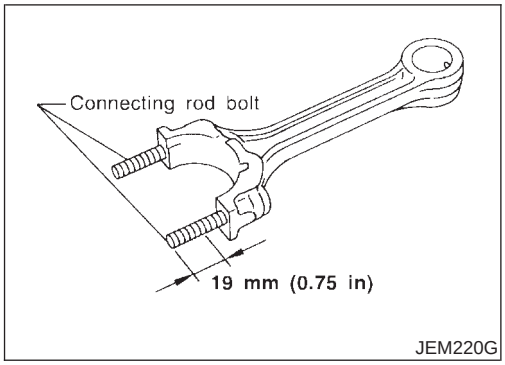

JEM220G

CONNECTING ROD BOLT DEFORMATION

NJEM0073S18

- Install nuts to connecting rod bolts. Check that the nut can be screwed smoothly on bolt threads by hand to the last thread on the bolt.
- If the nut does not screw in smoothly, measure the outer diameter of the bolt thread at the point specified in the figure.
- If a necked point is identified, measure at that point.

  Standard: 8.90 - 9.00 mm (0.3504 - 0.3543 in) dia.

  Limit: 8.75 mm (0. 3445 in) dia.
- If the measurement exceeds the limit, replace connecting rod bolts and nuts.

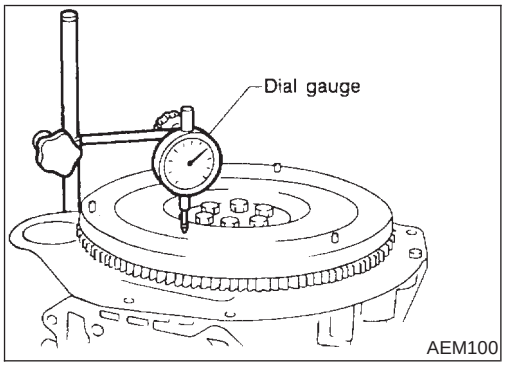

AEM100

FLYWHEEL RUNOUT

NJEM0073S11

Runout (Total indicator reading):

Flywheel★

Less than 0.15 mm (0.0059 in)

CAUTION:

- **The signal plate is built into the flywheel assembly. Be careful not to damage the signal plate, especially the teeth.**
- **Check the signal plate for deformation or cracks.**
- **Never place the flywheel assembly with the signal plate facing down.**
- **Keep any magnetized objects away from the signal plate.**
- **Do not allow any magnetic materials to contact the signal plate teeth.**

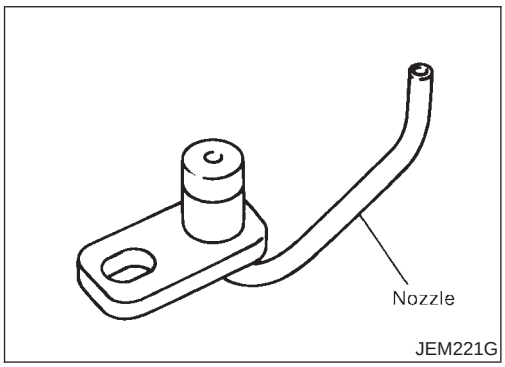

JEM221G

OIL JET

NJEM0073S19

- Check nozzle for deformation or damage.
- Check oil passage for obstruction by blowing in air on nozzle side.
- If abnormality is found, clean or replace.

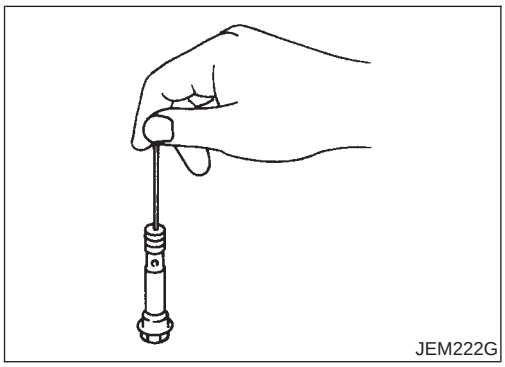
JEM222G

OIL JET RELIEF VALVE

NJEM0073S20

Using a clean resin rod, press down on the check valve inside relief valve. Check for appropriate bounce/repulsion and smooth operation.

Assembly

NJEM0074

PISTON

NJEM0074S01

1. With using snap ring pliers, install snap rings to grooves at the rear side of the piston.
- Install securely to fully fit into the groove.
2. Install piston to the connecting rod.
- Heat the piston with an industrial drier to 60 to 70°C (140 to 158°F) so that the piston pin can be easily inserted by finger. Then, insert the piston pin from the front of the piston into the piston and into the connecting rod.

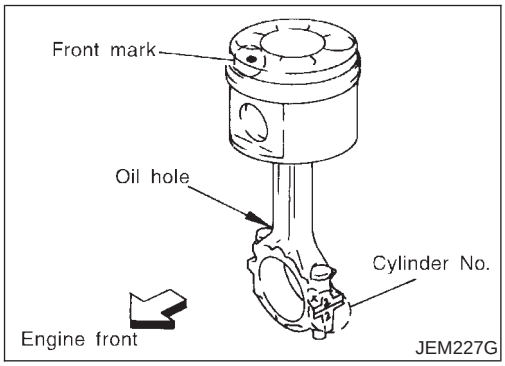

- Assemble so that the front mark on the piston top surface and cylinder No. stamped on connecting rod are positioned as shown in the figure.
3. Install snap ring on piston front.
- Refer to step 1. above for notes for installation.
- After installing, check that the connecting rod moves smoothly.
4. Install piston rings using piston ring expander (Commercial Service Tool).
- **Be extremely careful to avoid any damage to the piston.**

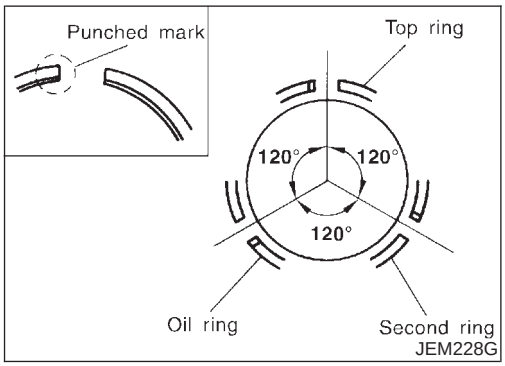

- Install top ring and second ring with the punched surface facing upward.

  Identification mark:

  Top ring AE

  Second ring AE2
- Install rings so that three closed gap position 120° apart one another.
- Closed gaps do not need to face in a specific directions, as long as each are positioned 120° apart.

CRANKSHAFT

NJEM0074S02

1. Blow air sufficiently into the coolant passage, oil passage in the cylinder block, inside of crankshaft case, and inside of cylinder bores to remove any foreign materials.
2. Install oil jet relief valves.
3. Install oil jets.

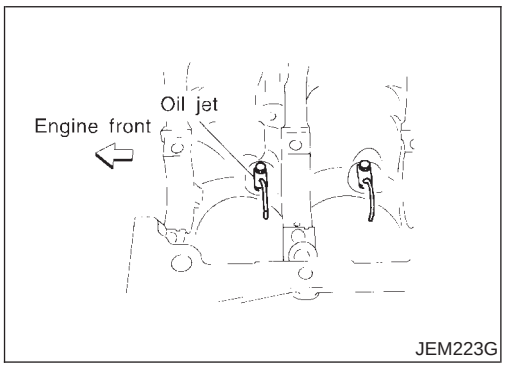

4. Install main bearings and thrust bearings.

a. Remove debris, dust, and oil from the locations on the cylinder block and main bearing caps where bearings are installed.

b. Install thrust bearing on each side of cylinder block No. 3 housing.

- Install thrust bearings with oil groove facing in the direction of the crankshaft arm (outside).

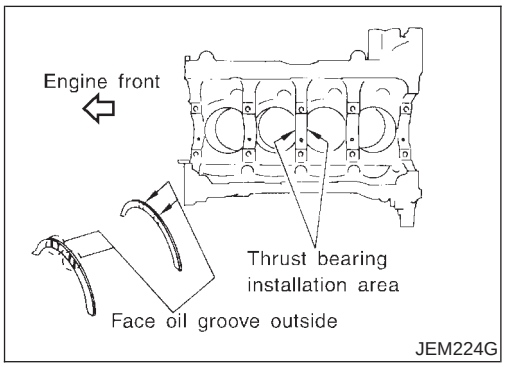

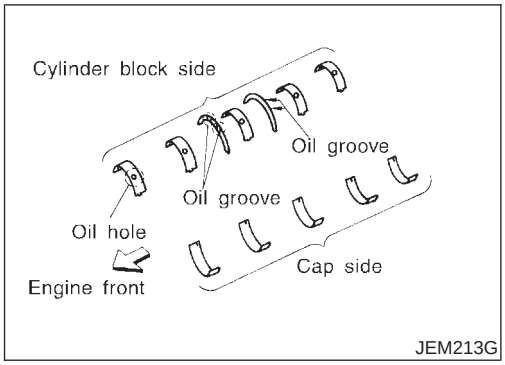

JEM213G

c. Be sure to install main bearings in the correct direction.
- Make sure those with oil holes or oil grooves are mounted on the cylinder block side, and those without oil holes or oil grooves are on the main cap side.
- Before installing, apply engine oil on the front (inner) surfaces of bearings. Do not apply oil to the back surfaces, but thoroughly clean them.
- Align stopper notches on bearings and install.
- Check the oil holes on cylinder block and those on bearings are aligned.

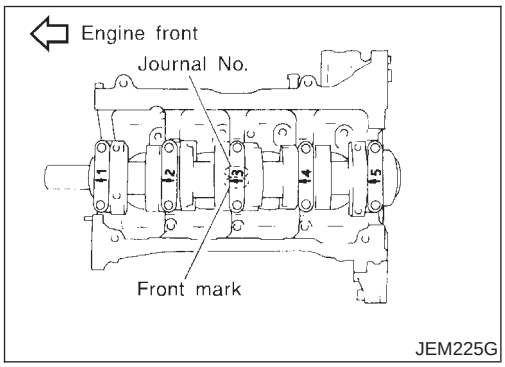

JEM225G

5. Install crankshaft to cylinder block.
- Make sure crankshaft rotates smoothly by hand.

6. Install main bearing caps.
- Identify main bearing caps by the punched mark. Install correctly, matching the journal No. on the bearing cap and the journal, with the front mark facing forward.
- Main bearing caps are commonly processed with the cylinder block. Therefore, caps and cylinder block should be replaced as a set.

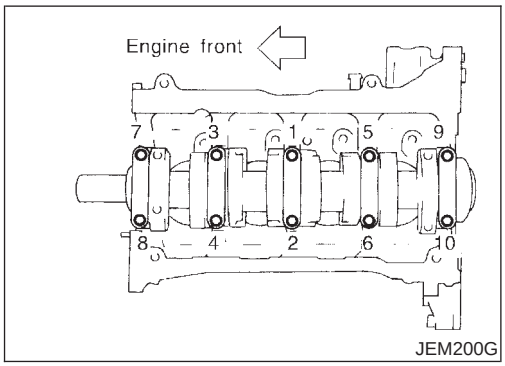

JEM200G

7. Check the main bearing cap bolts for deformation.
Refer to EM-153, "MAIN BEARING CAP BOLT DEFORMATION".

8. Tighten the main bearing cap bolts according to the following procedure:

a. Apply engine oil to the threaded part and seat surface of each bolt.

b. Tighten to 25 to 30 N·m (2.5 to 3.1 kg-m, 18 to 22 ft-lb) in the numerical order shown in the figure.

c. Put alignment marks (with paint) on each bolt and the main bearing cap, all in the same direction. (when using a protractor)

d. Then, tighten 90° to 95° [target: 90°].

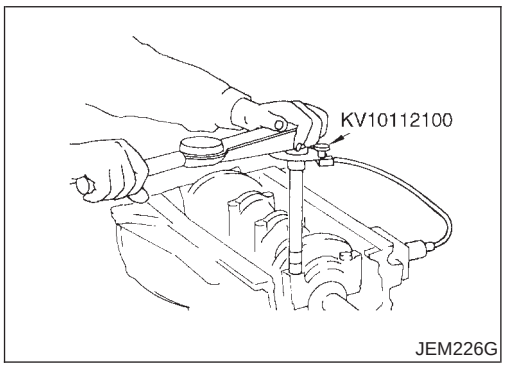

JEM226G

- **Always use either an angle wrench (SST) or protractor during angular tightening. Avoid tightening based on visual checks alone.**
- After tightening bolts to specified torque, make sure that crankshaft rotates smoothly.
- Check crankshaft end play. Refer to EM-144, "CRANKSHAFT END PLAY".

9. Check the outer diameter of connecting rod bolts. Refer to EM-154, "CONNECTING ROD BOLT DEFORMATION".

10. Install piston to connecting rod.

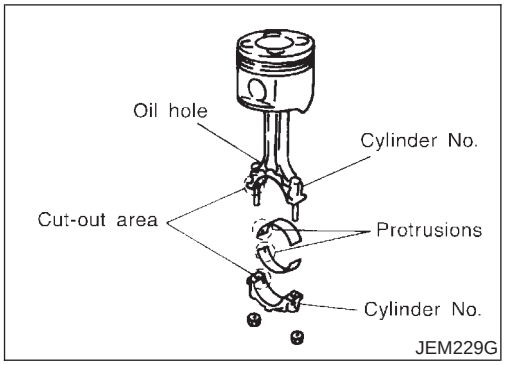

11. Install connecting rod bearing to connecting rod and connecting rod cap.
- Before installing, apply engine oil on the front (inner) surface of bearing. Do not apply oil to the back surface, but thoroughly clean it.
- Align stopper notches on connecting rod and protrusions on bearing and install.

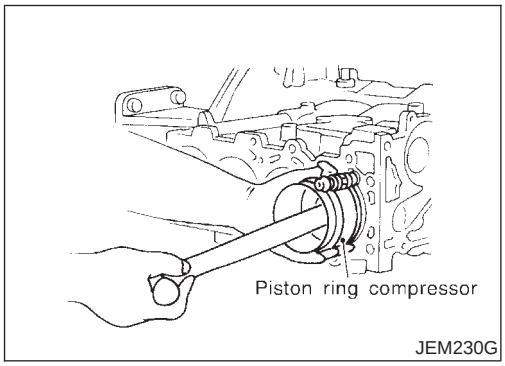

12. Install piston and connecting rod assembly to crankshaft.
- Set crankshaft pin of the installation location at BDC.
- Match the cylinder No. of connecting rod to the location of cylinder.
- Using piston ring compressor (Commercial Service Tool), install so that the front mark on the piston top surface faces in the direction of engine front.

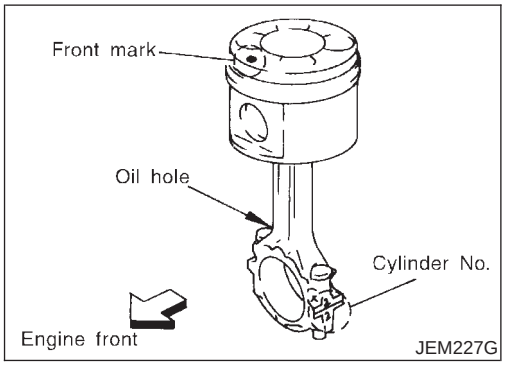

13. Install connecting rod caps.
- Match the cylinder No. punched on connecting rod and that on cap.
- Make sure that the front mark on connecting rod cap faces towards the front of the engine.

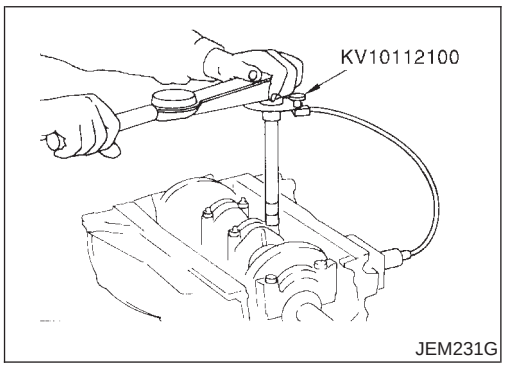

14. Tighten connecting rod nuts according to the following procedure:

a. Apply engine oil on bolt threads and seat surface of nuts.
b. Tighten to 29 to 30 N·m (2.9 to 3.1 kg-m, 21 to 22 ft-lb).
c. Loosen completely to 0 N·m (0 kg-m, 0 in-lb).
d. Tighten to 19 to 20 N·m (1.9 to 2.1 kg-m, 14 to 15 ft-lb).
e. Tighten 120° to 125° [target: 120°]. (angular tightening)

- **Always use either an angle wrench (SST) or protractor during angular tightening. Avoid tightening based on visual checks alone.**
- After tightening nuts, check that crankshaft rotates smoothly.
- Check connecting rod side clearance. Refer to EM-144, "CONNECTING ROD SIDE CLEARANCE".

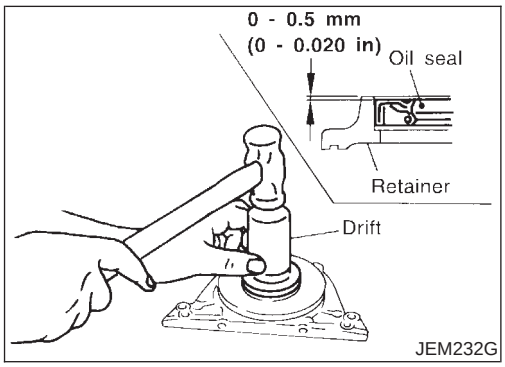

15. Force fit rear oil seal into rear oil seal retainer.
- Using a drift [105 mm (4.13 in) dia.], force fit so that the dimension is as specified in the figure.
- Avoid inclined fitting. Force fit perpendicularly.

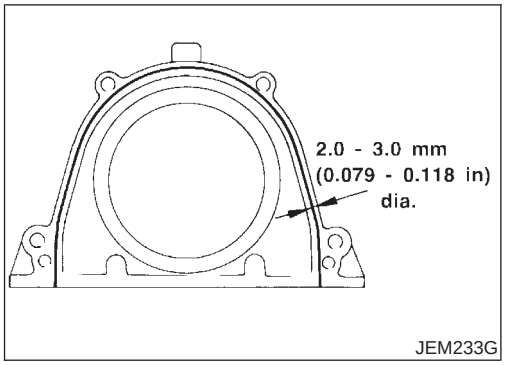

16. Install rear oil seal retainer.
- Apply a continuous bead of specified liquid gasket (Refer to EM-77, "Liquid Gasket Application Procedure".) on locations shown in the figure.

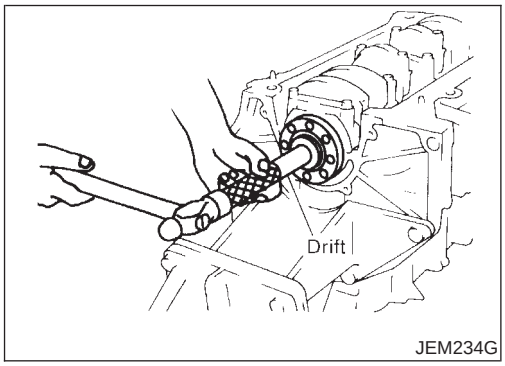

17. Install pilot bushing.
- Force fit with the drift [approx. 19 mm (0.75 in) dia.].

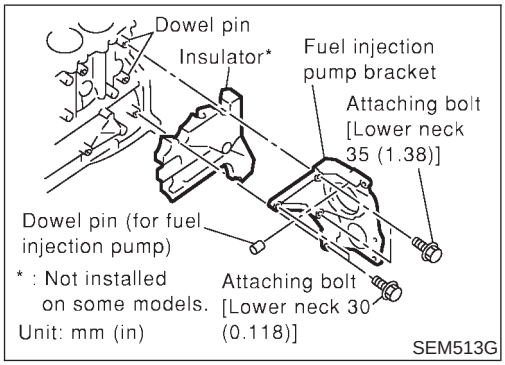

18. Install fuel injection pump bracket.
- Install insulator according to the shape of the block, and secure by placing the bracket against the insulator. (Not installed on some models)
- Align the bracket with the dowel pins on the block to install.
- The two bolts used for dowel pins have a longer shanks than the other two.
- Check the protruding distance of the dowel pin for fuel injection pump.

  Standard: 13.0 - 15.0 mm (0.512 - 0.591 in)

19. Install parts to the engine in the reverse order of disassembly.
- Tighten bolts securing brackets of auxiliary components (A/C compressor, alternator) to the specified torque.

  : 57 - 65 N·m (5.8 - 6.7 kg-m, 42 - 48 ft-lb)

20. Remove engine from engine stand in the reverse order of assembly.
21. Install flywheel.
- Holding ring gear with ring stopper (SST), tighten securing bolts with TORX-socket (size: Q8 E20, Commercial Service Tool).
- Tighten bolts uniformly in a crisscross manner.

REPLACEMENT OF PILOT BUSHING

NJEM0074S03

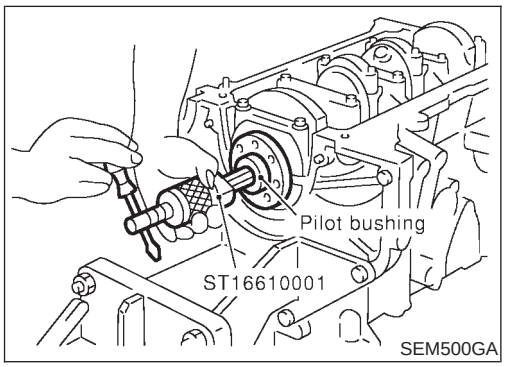

1. Remove pilot bushing using tool or suitable tool.

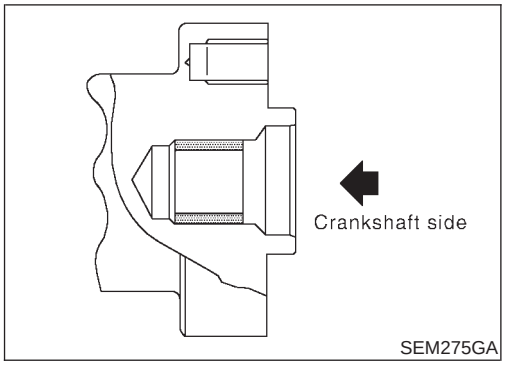

2. Install pilot bushing as shown.

General Specifications

NJEM0075

Cylinder arrangement		In-line 4
Displacement cm^3 (cu in)		2,184 (133.27)
Bore and stroke mm (in)		86 x 94 (3.39 x 3.70)
Valve arrangement		DOHC
Firing order		1-3-4-2
Number of piston rings	Compression	2
	Oil	1
Number of main bearings		5
Compression ratio		18.0

Compression Pressure

NJEM0076

Unit: kPa (bar, kg/cm^2, psi)/200 rpm

Compression pressure	Standard	3,138 (31.4, 32.0, 455)
	Minimum	2,452 (24.5, 25.0, 356)
	Differential limit between cylinders	490 (4.9, 5.0, 71)

Belt Deflection

NJEM0111

Applied belt	Belt specification	Belt deflection with 98 N (10 kg, 22 lb) force applied* mm (in)		
		New	Adjusted	Limit for re-tightening
Air conditioner compressor belt	HA type low edge belt	4 - 5 (0.16 - 0.20)	6 - 7 (0.24 - 0.28)	8.5 (0.335)
Alternator & water pump belt	HA type low-edge wide angle belt	9.0 - 10.5 (0.354 - 0.413)	11.0 - 12.5 (0.433 - 0.492)	16.5 (0.650)

*: When engine is cold.

Cylinder Head

NJEM0077

Unit: mm (in)

	Standard	Limit
Head surface distortion	Less than 0.03 (0.0012)	0.04 (0.0016)

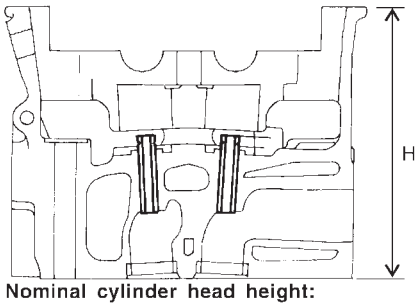

Nominal cylinder head height:
H = 153.9 - 154.1 mm (6.059 - 6.067 in)

JEM204G

Valve

VALVE

NJEM0078

NJEM0078S01
Unit: mm (in)

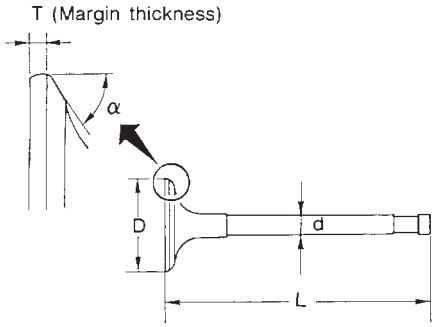

SEM188

Valve head diameter “D”	Intake	28.0 - 28.3 (1.102 - 1.114)
	Exhaust	26.0 - 26.3 (1.024 - 1.035)
Valve length “L”	Intake	106.72 (4.2016)
	Exhaust	106.36 (4.1874)
Valve stem diameter “d”	Intake	5.965 - 5.980 (0.2348 - 0.2354)
	Exhaust	5.945 - 5.960 (0.2341 - 0.2346)
Valve seat angle “α”	Intake	45°15′ - 45°45′
	Exhaust	
Valve margin “T”	Intake	1.38 (0.0543)
	Exhaust	1.48 (0.0583)
Valve margin “T” limit		More than 1.0 (0.039)
Valve stem end surface grinding limit		Less than 0.2 (0.008)

VALVE CLEARANCE

NJEM0078S02
Unit: mm (in)

	Cold	Hot* (reference data)
Intake	0.24 - 0.32 (0.009 - 0.013)	0.274 - 0.386 (0.011 - 0.015)
Exhaust	0.26 - 0.34 (0.010 - 0.013)	0.308 - 0.432 (0.012 - 0.017)

*: Approximately 80°C (176°F)

AVAILABLE SHIMS

NJEM0078S03

Thickness mm (in)	Identification mark
2.10 (0.0827)	2.10
2.12 (0.0835)	2.12
2.14 (0.0843)	2.14
2.16 (0.0850)	2.16
2.18 (0.0858)	2.18
2.20 (0.0866)	2.20
2.22 (0.0874)	2.22
2.24 (0.0882)	2.24
2.26 (0.0890)	2.26
2.28 (0.0898)	2.28

Thickness mm (in)	Identification mark
2.30 (0.0906)	2.30
2.32 (0.0913)	2.32
2.34 (0.0921)	2.34
2.36 (0.0929)	2.36
2.38 (0.0937)	2.38
2.40 (0.0945)	2.40
2.42 (0.0953)	2.42
2.44 (0.0961)	2.44
2.46 (0.0969)	2.46
2.48 (0.0976)	2.48
2.50 (0.0984)	2.50
2.52 (0.0992)	2.52
2.54 (0.1000)	2.54
2.56 (0.1008)	2.56
2.58 (0.1016)	2.58
2.60 (0.1024)	2.60
2.62 (0.1031)	2.62
2.64 (0.1039)	2.64
2.66 (0.1047)	2.66
2.68 (0.1055)	2.68
2.70 (0.1063)	2.70
2.72 (0.1071)	2.72
2.74 (0.1079)	2.74

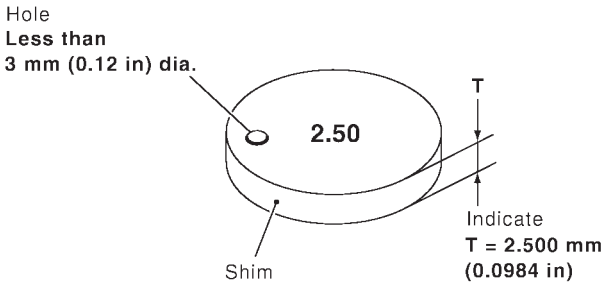

SEM512G

VALVE SPRING

NJEM0078S04

Free height mm (in)	Outer	42.3 (1.6654)
Pressure N (kg, lb) at height mm (in)	Outer	366 (37.3, 82.2) at 24.82 (0.9772)
Out-of-square mm (in)	Outer	Limit 2.1 (0.083)

VALVE LIFTER

NJEM0078S05

Unit: mm (in)

Valve lifter outer diameter	29.960 - 29.975 (1.1795 - 1.1801)

Lifter guide inner diameter	30.000 - 30.021 (1.1181 - 1.1819)
Clearance between lifter and lifter guide	0.025 - 0.061 (0.0010 - 0.0024)

VALVE GUIDE

NJEM0078S06

Unit: mm (in)

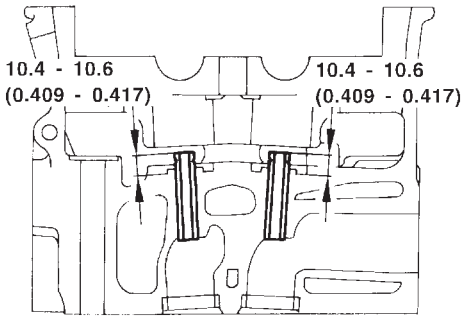

Unit: mm (in)

JEM156G

		Standard	Service
Valve guide	Outer diameter	10.023 - 10.034 (0.3946 - 0.3950)	10.223 - 10.234 (0.4025 - 0.4029)
Valve guide	Inner diameter (Finished size)	6.000 - 6.018 (0.2362 - 0.2369)	
Cylinder head valve guide hole diameter		9.975 - 9.996 (0.3927 - 0.3935)	10.175 - 10.196 (0.4006 - 0.4014)
Interference fit of valve guide		0.027 - 0.059 (0.0011 - 0.0023)	
		Standard	Limit
Stem to guide clearance	Intake	0.020 - 0.053 (0.0008 - 0.0021)	0.08 (0.0031)
	Exhaust	0.040 - 0.073 (0.0016 - 0.0029)	0.1 (0.004)
Valve deflection limit		0.15 (0.0059)	
Projection length		10.4 - 10.6 (0.4094 - 0.4173)	

Valve Seat

NJEM0079

Unit: mm (in)

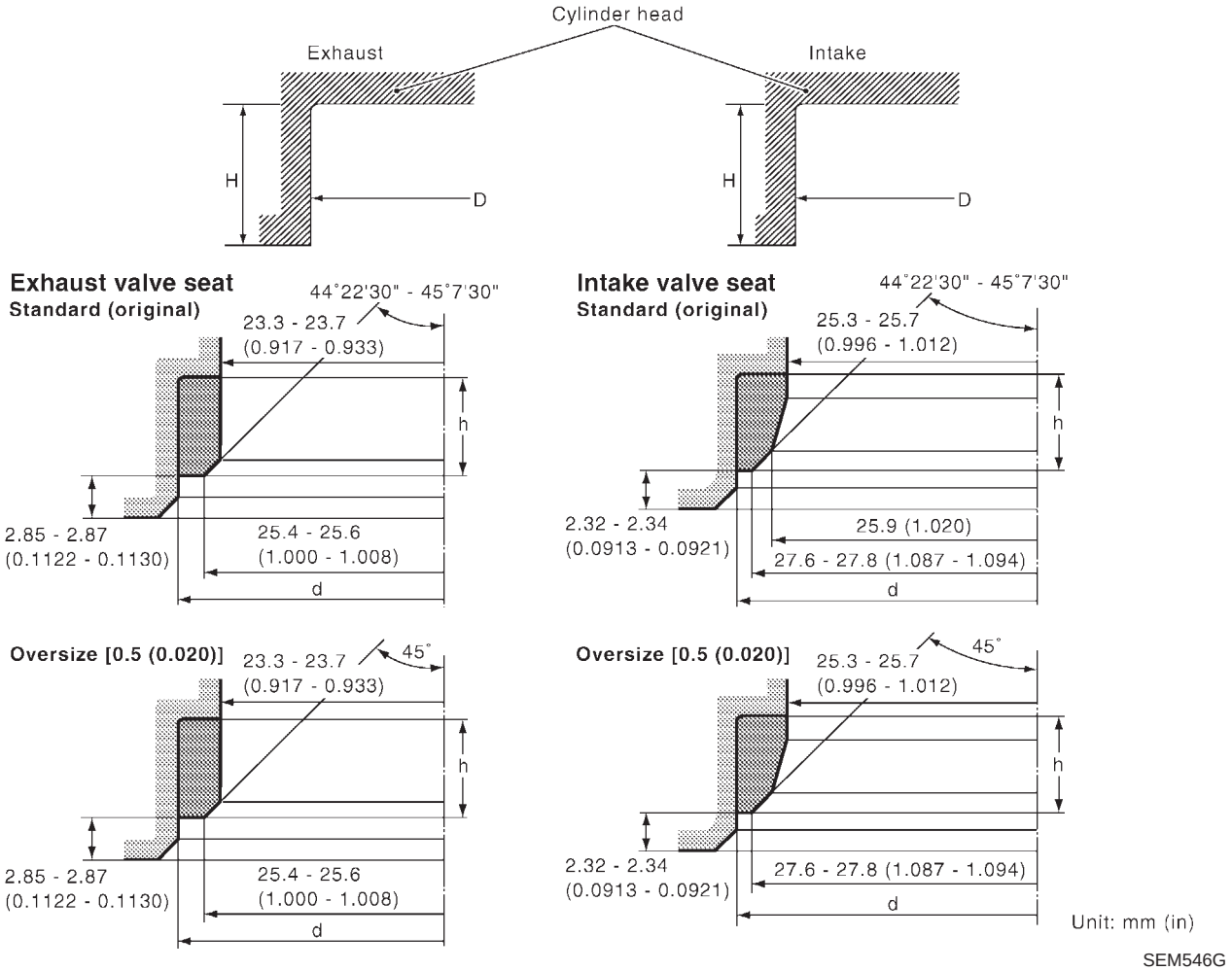

SEM546G

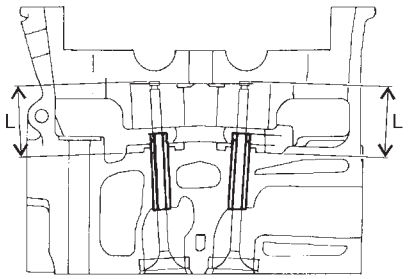

JEM253G

		Standard	Service
Cylinder head seat recess diameter (D)	Intake	30.000 - 30.016 (1.1181 - 1.1817)	30.500 - 30.516 (1.2008 - 1.2014)
	Exhaust	29.000 - 29.016 (1.1417 - 1.1424)	29.500 - 29.516 (1.1614 - 1.1620)
Valve seat interference fit	Intake	0.064 - 0.100 (0.0025 - 0.0039)	
	Exhaust	0.064 - 0.096 (0.0025 - 0.0038)	
Valve seat outer diameter (d)	Intake	30.080 - 30.100 (1.1842 - 1.1850)	30.580 - 30.600 (1.2039 - 1.2047)
	Exhaust	29.080 - 29.096 (1.1449 - 1.1455)	29.580 - 29.596 (1.1646 - 1.1652)

Height (h)	Intake	7.0 - 7.1 (0.276 - 0.280)	6.60 - 6.70 (0.2598 - 0.2638)
	Exhaust	6.7 - 6.8 (0.264 - 0.268)	6.3 - 6.4 (0.248 - 0.252)
Depth (H)	Intake	8.83 - 9.13 (0.3476 - 0.3594)	
	Exhaust	9.06 - 9.36 (0.3567 - 0.3685)	
Depth (L)	Intake	36.53 - 36.98 (1.4382 - 1.4559)	
	Exhaust	36.53 - 37.01 (1.4382 - 1.4571)	

Camshaft and Camshaft Bearing

=NJEM0080

Unit: mm (in)

	Standard	Limit
Camshaft journal to bearing clearance	0.045 - 0.086 (0.0018 - 0.0034)	0.045 - 0.086 (0.0018 - 0.0034)
Inner diameter of camshaft bearing	No. 1 30.500 - 30.521 (1.2008 - 1.2016) No. 2, 3, 4, 5 24.000 - 24.021 (0.9449 - 0.9457)	—
Outer diameter of camshaft journal	No. 1 30.435 - 30.455 (1.1982 - 1.1990) No. 2, 3, 4, 5 23.935 - 23.955 (0.9423 - 0.9431)	—
Camshaft runout [TIR*]	—	0.02 (0.0008)
Camshaft sprocket runout [TIR*]	Less than 0.15 (0.0059)	—
Camshaft end play	0.070 - 0.148 (0.0028 - 0.0058)	0.24 (0.0094)

*: Total indicator reading

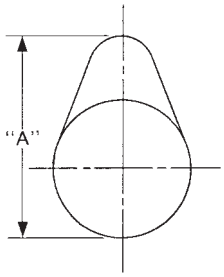

EM671

Cam height "A"	Intake	39.505 - 39.695 (1.5553 - 1.5628)
	Exhaust	39.905 - 40.095 (1.5711 - 1.5785)
Wear limit of cam height		0.15 (0.0059)
Valve timing		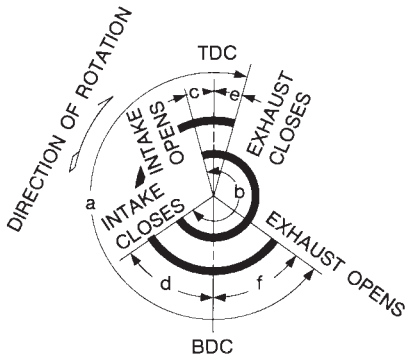 EM120

Unit: degree

a	b	c	d	e	f
224	212	2	30	–2	46

Cylinder Block

NJEM0081
Unit: mm (in)

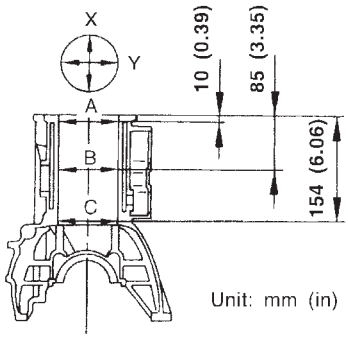

JEM207G

Surface flatness	Standard			Less than 0.03 (0.0012)
	Limit			0.04 (0.0016)
Cylinder bore	Inner diameter	Standard	Grade No. 1	86.000 - 86.010 (3.3858 - 3.3862)
			Grade No. 2	86.010 - 86.020 (3.3862 - 3.3866)
			Grade No. 3	86.020 - 86.030 (3.3866 - 3.3870)
		Wear limit		0.07 (0.0028)
Out-of-round (X − Y)				Less than 0.015 (0.0006)
Taper (A − B − C)				Less than 0.010 (0.0004)
Main journal inner diameter grade (Without bearing)	Grade No. 0 Grade No. 1 Grade No. 2			66.654 - 66.663 (2.6242 - 2.6245) 66.663 - 66.672 (2.6245 - 2.6249) 66.672 - 66.681 (2.6249 - 2.6252)
Difference in inner diameter between cylinders	Limit			Less than 0.05 (0.0020)

Piston, Piston Ring and Piston Pin

NJEM0082

AVAILABLE PISTON

NJEM0082S01
Unit: mm (in)

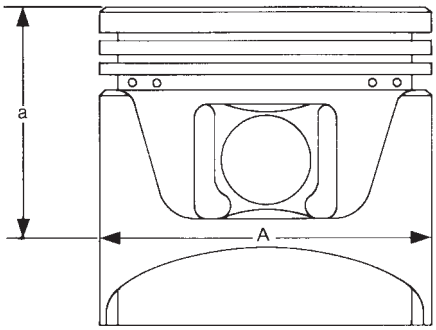

SEM882E

Piston skirt diameter “A”	Standard	Grade No. 1	85.920 - 85.930 (3.3827 - 3.3831)
		Grade No. 2	85.930 - 85.940 (3.3831 - 3.3835)
		Grade No. 3	85.940 - 85.950 (3.3835 - 3.3839)
		0.25 (0.0098) oversize (Service)	86.170 - 86.200 (3.3925 - 3.3937)
		0.50 (0.0197) oversize (Service)	86.420 - 86.450 (3.4024 - 3.4035)
“a” dimension			58.0 (2.28)
Piston pin hole diameter			27.997 - 28.005 (1.1022 - 1.1026)

Piston clearance to cylinder block	0.070 -0.090 (0.0028 - 0.0035)

PISTON RING

NJEM0082S02

Unit: mm (in)

		Standard	Limit
Side clearance	Top	0.120 - 0.180 (0.0047 - 0.0071)	0.2 (0.008)
	2nd	0.050 - 0.090 (0.0020 - 0.0035)	0.1 (0.004)
	Oil ring	0.030 - 0.070 (0.0012 - 0.0028)	—
End gap	Top	0.20 - 0.35 (0.0079 - 0.0138)	1.0 (0.039)
	2nd	0.39 - 0.54 (0.0154 - 0.0213)	1.0 (0.039)
	Oil (rail ring)	0.25 - 0.50 (0.0098 - 0.0197)	1.0 (0.039)

PISTON PIN

NJEM0082S03

Unit: mm (in)

Piston pin outer diameter		27.994 - 28.000 (1.1021 - 1.1024)
Interference fit of piston pin to piston		0.002 - 0.006 (0.0001 - 0.0002)
Piston pin to connecting rod bushing clearance	Standard	0.026 - 0.044 (0.0010 - 0.0017)
	Limit	0.057 (0.0022)

*: Values measured at ambient temperature of 20°C (68°F)

Connecting Rod

NJEM0083

Unit: mm (in)

Center distance		157.5 (6.201)
Bend [per 100 (3.94)]	Limit	0.12 (0.0047)
Torsion [per 100 (3.94)]	Limit	0.12 (0.0047)
Connecting rod small end inner diameter		30.080 - 31.000 (1.1842 - 1.2205)
Piston pin bushing inner diameter*		28.026 - 28.038 (1.1034 - 1.1039)
Connecting rod big end inner diameter		55.000 - 55.013 (2.1654 - 2.1659)
Side clearance	Standard	0.200 - 0.350 (0.0079 - 0.0138)
	Limit	0.4 (0.016)

*: After installing in connecting rod

Crankshaft

NJEM0084

Unit: mm (in)

Main journal dia. "Dm" grade	Grade No. 0 Grade No. 1 Grade No. 2	62.967 - 62.975 (2.4790 - 2.4793) 62.959 - 62.967 (2.4787 - 2.4790) 62.951 - 62.959 (2.4784 - 2.4787)
Pin journal dia. "Dp"	Grade No. 0	51.968 - 51.974 (2.0460 - 2.0462)
	Grade No. 1	51.961 - 51.968 (2.0457 - 2.0460)
	Grade No. 2	51.954 - 51.961 (2.0454 - 2.0457)
Center distance "r"		46.97 - 47.03 (1.8492 - 1.8516)
Out-of-round (X − Y)	Standard/Limit	Less than 0.003 (0.0001)/Less than 0.005 (0.0002)
Taper (A − B)	Standard/Limit	Less than 0.003 (0.0001)/Less than 0.005 (0.0002)
Runout [TIR*]	Standard	Less than 0.05 (0.0020)
	Limit	Less than 0.10 (0.0039)

Free end play	Standard	0.10 - 0.25 (0.0039 - 0.0098)
	Limit	0.30 (0.0118)

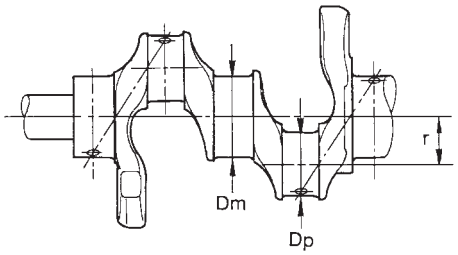

SEM645

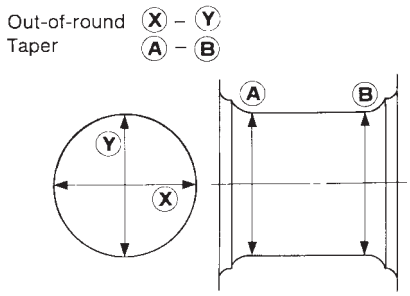

EM715

*: Total indicator reading

Available Main Bearing

NJEM0085

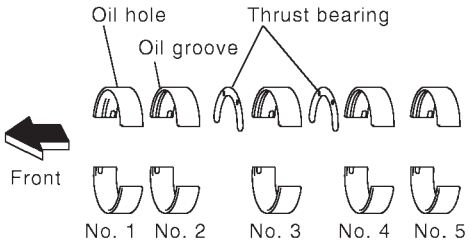

SEM255G

Grade number	Thickness "T" mm (in)	Width "W" mm (in)	Identification color
0	1.816 - 1.820 (0.0715 - 0.0717)	19.9 - 20.1 (0.783 - 0.791)	Black
1	1.820 - 1.824 (0.0717 - 0.0718)		Red or Brown
2	1.824 - 1.828 (0.0718 - 0.0720)		Green
3	1.828 - 1.832 (0.0720 - 0.0721)		Yellow
4	1.832 - 1.836 (0.0721 - 0.0723)		Blue

UNDERSIZE

NJEM0085S01

Unit: mm (in)

	Thickness	Main journal diameter "Dm"
0.25 (0.0098)	1.949 - 1.953 (0.0767 - 0.0769)	Grind so that bearing clearance is the specified value.

Available Connecting Rod Bearing

NJEM0086

CONNECTING ROD BEARING

NJEM0086S01

Grade number	Thickness "T" mm (in)	Width "W" mm (in)	Identification color (mark)
0	1.492 - 1.496 (0.0587 - 0.0589)	22.9 - 23.1 (0.902 - 0.909)	Black
1	1.496 - 1.500 (0.0589 - 0.0591)		Brown
2	1.500 - 1.504 (0.0591 - 0.0592)		Green

UNDERSIZE

NJEM0086S02

Unit: mm (in)

	Thickness	Crank pin journal diameter "Dp"
0.08 (0.0031)	1.536 - 1.540 (0.0605 - 0.0606)	Grind so that bearing clearance is the specified value.
0.12 (0.0047)	1.556 - 1.560 (0.0613 - 0.0614)	
0.25 (0.0098)	1.621 - 1.625 (0.0638 - 0.0640)	

Miscellaneous Components

NJEM0087

Unit: mm (in)

Flywheel runout [TIR]*	Less than 0.15 (0.0059)

*: Total indicator reading

BEARING CLEARANCE

NJEM0087S01

Unit: mm (in)

Main bearing clearance	Standard	0.039 - 0.066 (0.0015 - 0.0026)
	Limit	0.10 (0.0039)
Connecting rod bearing clearance	Standard	0.031 - 0.061 (0.0012 - 0.0024)
	Limit	0.09 (0.0035)