Chevrolet Silverado GMT900 2007 – 2014 fuse box diagram

Instrument Panel Fuse Block

The instrument panel fuse block access door is located on the driver side edge of the instrument panel.

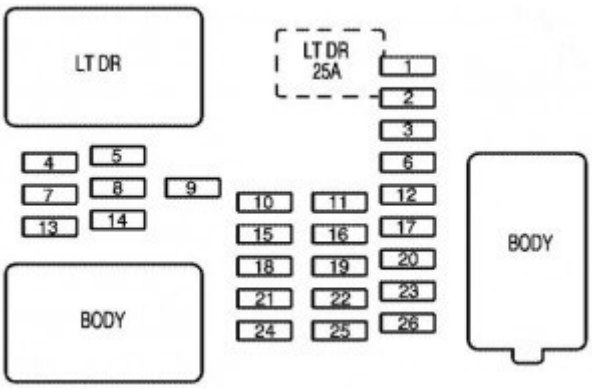

Chevrolet Silverado mk2 – fuse box – instrument panel

Fuses	Usage
1	Rear Seats
2	Rear Accessory Power Outlet
3	Steering Wheel Controls Backlight
4	Driver Door Module
5	Dome Lamps, Driver Side Turn Signal
6	Driver Side Turn Signal, Stoplamp
7	Instrument Panel Back Lighting
8	Passenger Side Turn Signal, Stoplamp
9	Passenger Door Module, Driver Unlock
10	Power Door Lock 2 (Unlock Feature)
11	Power Door Lock 2 (Lock Feature)
12	Stoplamps, Center-High Mounted Stoplamp
13	Rear Climate Controls

14	Power Mirror
15	Body Control Module (BCM)
16	Accessory Power Outlets
17	Interior Lamps
18	Power Door Lock 1 (Unlock Feature)
19	Rear Seat Entertainment
20	Ultrasonic Rear Parking Assist, Power Liftgate
21	Power Door Lock 1 (Lock Feature)
22	Driver Information Center (DIC)
23	Rear Wiper
24	Cooled Seats
25	Driver Seat Module, Remote Keyless Entry System
26	Driver Power Door Lock (Unlock Feature)

Circuit Breaker	Usage
LT DR	Driver Side Power Window Circuit Breaker

Harness Connector	Usage
LT DR	Driver Door Harness Connection
BODY	Harness Connector
BODY	Harness Connector

Center Instrument Panel Fuse Block

The center instrument panel fuse block is located underneath the instrument panel, to the left of the steering column.

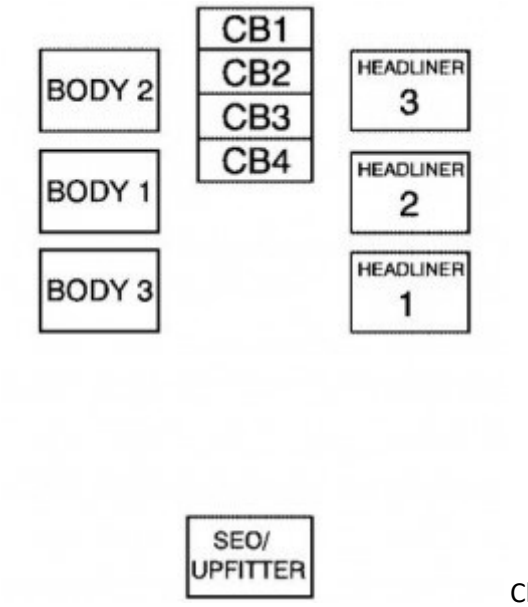

Chevrolet Silverado mk2 – fuse box – center instrument panel – top view

Harness Connector	Usage
BODY 2	Body Harness Connector 2
BODY 1	Body Harness Connector 1
BODY 3	Body Harness Connector 3
HEADLINER 3	Headliner Harness Connector 3
HEADLINER 2	Headliner Harness Connector 2
HEADLINER 1	Headliner Harness Connector 1
SEO/UPFITTER	Special Equipment Option Upfitter Harness Connector

Circuit Breaker	Usage
CB1	Passenger Side Power Window Circuit Breaker
CB2	Passenger Seat Circuit Breaker
CB3	Driver Seat Circuit Breaker
CB4	Rear Sliding Window

Underhood Fuse Block

The underhood fuse block is located in the engine compartment, on the driver side of the vehicle.

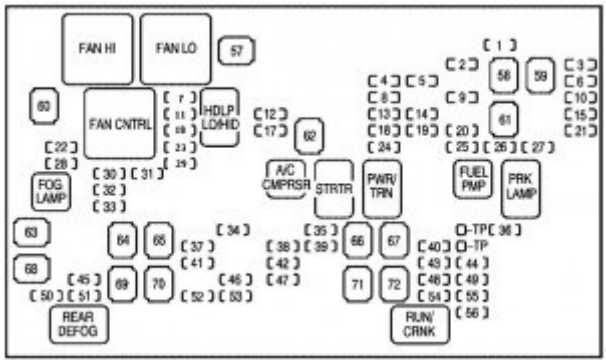

Chevrolet Silverado – fuse box – underhood fuse block

Fuses	Usage
1	Right Trailer Stop/Turn Lamp
2	Electronic Suspension Control, Automatic Level Control Exhaust
3	Left Trailer Stop/Turn Lamp
4	Engine Controls
5	Engine Control Module, Throttle Control
6	Trailer Brake Controller
7	Front Washer
8	Oxygen Sensor
9	Antilock Brakes System 2
10	Trailer Back-up Lamps
11	Driver Side Low-Beam Headlamp
12	Engine Control Module (Battery)
13	Fuel Injectors, Ignition Coils (Right Side)
14	Transmission Control Module (Battery)
15	Vehicle Back-up Lamps
16	Passenger Side Low-Beam Headlamp
17	Air Conditioning Compressor
18	Oxygen Sensors
19	Transmission Controls (Ignition)
20	Fuel Pump

21	Fuel System Control Module
22	Not Used
23	Not Used
24	Fuel Injectors, Ignition Coils (Left Side)
25	Trailer Park Lamps
26	Driver Side Park Lamps
27	Passenger Side Park Lamps
28	Fog Lamps
29	Horn
30	Passenger Side High-Beam Headlamp
31	Daytime Running Lamps (DRL)
32	Driver Side High-Beam Headlamp
33	Daytime Running Lights 2
34	Sunroof
35	Key Ignition System, Theft Deterrent System
36	Windshield Wiper
37	SEO B2 Upfitter Usage (Battery)
38	Electric Adjustable Pedals
39	Climate Controls (Battery)
40	Airbag System (Ignition)
41	Amplifier
42	Audio System
43	Miscellaneous (Ignition), Cruise Control
44	Not Used
45	Airbag System (Battery)
46	Instrument Panel Cluster
47	Power Take-Off

48	Auxiliary Climate Control (Ignition)
49	Center High-Mounted Stoplamp (CHMSL)
50	Rear Defogger
51	Heated Mirrors
52	SEO B1 Upfitter Usage (Battery)
53	Cigarette Lighter, Auxiliary Power Outlet
54	SEO Upfitter Usage
55	Climate Controls (Ignition)
56	Engine Control Module, Secondary Fuel Pump (Ignition)

J-Case Fuses	Usage
57	Cooling Fan 1
58	Not Used
59	Heavy Duty Antilock Brake System
60	Cooling Fan 2
61	Antilock Brake System 1
62	Starter
63	Stud 2 (Trailer Brakes)
64	Left Bussed Electrical Center 1
65	Not Used
66	Heated Windshield Washer System
67	Transfer Case
68	Stud 1 (Trailer Connector Battery Power) (Optional – 40A Fuse Required)
69	Mid-Bussed Electrical Center 1
70	Climate Control Blower
71	Not Used
72	Left Bussed Electrical Center 2

Relays	Usage
FAN HI	Cooling Fan High Speed
FAN LO	Cooling Fan Low Speed
FAN CNTRL	Cooling Fan Control
HDLP LO/HI	Low-Beam Headlamp
FOG LAMP	Front Fog Lamps
A/C CMPRSR	Air Conditioning Compressor
STRTR	Starter
PWR/TRN	Powertrain
FUEL PMP	Fuel Pump
PRK LAMP	Parking Lamps
REAR DEFOG	Rear Defogger
RUN/CRANK	Switched Power