Owner's Manual
for Vehicle

Contents
From A to Z

CarManuals2.com

Online Edition for Part No. 01 41 0 156 337 - © 09/01 BMW AG

CarManuals2.com

Z8

Congratulations, and thank you for choosing a BMW.

Thorough familiarity with your vehicle will provide you with enhanced control and security when you drive it. We therefore have this request:

Please take the time to read this Owner's Manual and familiarize yourself with the information that we have compiled for you before starting off in your new BMW. It contains important data and instructions intended to help you derive maximum use and satisfaction from your BMW's unique range of technical features. The manual also contains information on care and maintenance designed to enhance operating safety and contribute to maintaining the value of your vehicle throughout an extended service life.

This manual is supplemented by a Service and Warranty Information Booklet (US models) or a Warranty and Service Guide Booklet (Canadian models). We recommend that you read the applicable publication thoroughly.

CarManuals2.com

Your BMW is covered by the following warranties:

– New Vehicle Limited Warranty

– Limited Rust Perforation Warranty

– Federal Emissions System Defect Warranty

– Federal Emissions Performance Warranty

– California Emissions Control System Limited Warranty

Detailed information concerning these warranties is provided in the Service and Warranty Information Booklet (US models) or in the Warranty and Service Guide Booklet (Canadian models).

We wish you an enjoyable driving experience.

BMW AG

Using this Owner's Manual

This Owner's Manual has been specially compiled to provide you with a quick and convenient reference source. The fastest way to find information on particular topics is by turning to the comprehensive index at the back of the manual. If you are looking for a brief summary of the essentials, you can turn immediately to the first section.

We hope that the detailed table of contents provided on the pages following the content summary will stimulate your interest and encourage you to explore the remainder of the manual.

Should the day come when you decide to sell your BMW, please remember to ensure that the new owner receives this manual. The manual is legally considered to be part of the vehicle.

© 2001 Bayerische Motoren Werke Aktiengesellschaft
Munich, Germany
Reprinting, including excerpts, only with the written consent of BMW AG, Munich.
Order No. 01 41 0 156 337
US English VIII/2001
Printed in Germany
Printed on environmentally friendly paper (bleached without chlorine, suitable for recycling).

Your BMW center will be happy to assist you with any additional questions that may arise.

Symbols used

Indicates precautions that must be followed precisely in order to avoid the possibility of personal injury and serious damage to the vehicle.◀

Contains information that will assist you in gaining the optimum benefit from your vehicle and enable you to care more effectively for your vehicle.◀

CarManuals2.com

Refers to measures that can be taken to help protect the environment.◀

◀ Marks the end of a specific item of information.

* Indicates special equipment, country-specific equipment and optional extras.

Identifies index entries that refer to owner service procedures or topics on car care.

Identifies systems or components, which your BMW center can either activate or adapt to suit individual driver's requirements ("Vehicle Memory", "Key Memory"). Refer to page 49.◀

Your own personal vehicle

If your BMW includes optional equipment not described in this manual (sound system, navigation system, mobile phone, etc.), please refer to the separate manuals provided. We urge you to take the time to study their contents carefully.

Status at time of printing

To ensure that our products continue to embody unexcelled levels of quality and safety, we at BMW pursue a policy of continuous, ongoing development embracing all aspects of design. This process includes all components and accessories as well as manufacturing techniques. It is possible that some of the equipment in your own vehicle may differ from that described in this manual. For the same reason, it is impossible to guarantee that the descriptions and illustrations will be accurate in all respects. We must therefore request your understanding for the fact that we are unable to recognize liability claims based on discrepancies between the data, illustrations and descriptions in this manual and your own vehicle's equipment.

CarManuals2.com

For your safety

Use unleaded gasoline only. Fuels containing up to and including 10% ethanol or other oxygenates with up to 2.8% oxygen by weight (i.e. 15% MTBE or 3% methanol plus an equivalent amount of co-solvent) will not void the applicable warranties respecting defects in materials or workmanship.
Field experience has indicated significant differences in fuel quality (i.e. volatility, composition, additives, etc.) among gasolines offered for sale in the United States and Canada. Use of inferior fuels can lead to poor starting, driveability problems and stalling; these difficulties can be aggravated by extreme operating conditions such as those encountered in extremely hot weather and at high altitudes.
Should you encounter drivability problems which you suspect could be related to the fuel you are using, we recommend that you respond by switching to a recognized high-quality brand.
Failure to comply with these recommendations may result in unscheduled maintenance.
Always observe all applicable safety rules and precautions when handling gasoline.◀

Important safety information!

For your own safety, use genuine parts and accessories approved by BMW.

When you purchase accessories tested and approved by BMW and Original BMW Parts, you simultaneously acquire the assurance that they have been thoroughly tested by BMW to ensure optimum performance when installed on your vehicle.

BMW warrants these parts to be free from defects in material and workmanship.

BMW will not accept any liability for damages resulting from installation of parts and accessories not approved by BMW.

CarManuals2.com

BMW cannot test every product made by other manufacturers to confirm that it can be used on a BMW safely and withour risk to either the vehicle, its operation, or its occupants.

Original BMW Parts, BMW Accessories and other products approved by BMW, together with professional advice on using these items, are available from all BMW centers.

Installation and operation of non-BMW approved accessories such as alarms, radios, amplifiers, radar detectors, wheels, suspension components, brake dust shields, telephones (including operation of any portable cellular phone from within the vehicle without using an externally mounted antenna) or transceiver equipment (such as CB, walkie-talkie, ham radio or similar) may cause extensive damage to the vehicle, compromise its safety, interfere with the vehicle's electrical system or affect the validity of the BMW Limited Warranty. See your BMW center for additional information.◀

Maintenance, replacement, or repair of the emission control devices and systems may be performed by any automotive repair establishment or individual using any certified automotive part.◀

Symbol on vehicle parts

Indicates that you should consult the relevant section of this Owner's Manual for information on a particular part or assembly.

The following only applies to vehicles owned and operated in the US.

REPORTING SAFETY DEFECTS

If you believe that your vehicle has a defect that could cause a crash or could cause injury or death, you should immediately inform the National Highway Traffic Safety Administration (NHTSA) in addition to notifying BMW of North America, LLC, P.O. Box 1227, Westwood, New Jersey 07675-1227, Telephone (201) 307-4000.

If NHTSA receives similar complaints, it may open an investigation, and if it finds that a safety defect exists in a group of vehicles, it may order a recall and remedy campaign. However, NHTSA cannot become involved in individual problems between you, your dealer, or BMW of North America, LLC.

To contact NHTSA, you may either call the Auto Safety Hotline toll-free at 1-800-424-9393 (or 202-366-0123 in Washington, D.C. area) or write to: NHTSA, U.S. Department of Transportation, Washington, D.C. 20590. You can also obtain other information about engine vehicle safety from the Hotline.

CarManuals2.com

CarManuals2.com

Overview

Controls and features

Operation, care and maintenance

Owner service procedures

Advanced technology

Technical data

Index

CarManuals2.com

Contents

Overview

Cockpit 16
Instrument cluster 18
Indicator and warning lamps 20
Hazard warning flashers 24
Warning triangle 24
First-aid kit 24
Refueling 25
Fuel quality 26
Tire inflation pressure 26

Controls and features

Locks and security systems:
Keys 30
Electronic vehicle immobilizer 31
Central locking system 32
Opening and closing – from the outside 32
Using the key 32
Using the remote control 33
Opening and closing – from the inside 36
Luggage compartment lid 37
Alarm system 38
Electric power windows 40
The automatic convertible top 41

Adjustments:
Seats 45
Steering wheel 47
Mirrors 47
Vehicle Memory, Key Memory 49

Passenger safety systems:
Safety belts 50
Airbags 51
Transporting children safely 53

Driving:
Ignition and steering lock 55
Starting the engine 56
Switching off the engine 57
Parking brake 57
Manual transmission 58
Turn signal indicator/Headlamp flasher 58
Washer/Wiper system 59
Rear window defroster 60
Cruise control 61

Everything under control:
Odometer 62
Tachometer 62
Fuel gauge 62
Coolant temperature gauge 63
Service Interval Display 63
Clock 64
Multi-Information Radio (MIR) 64

Technology for safety and driving convenience:
Dynamic Stability Control (DSC) 65
Dynamic Performance Control 66
Flat Tire Monitor 67

CarManuals2.com

Controls and features

Lamps:
Parking lamps/Low beams 69
Instrument lighting 69
High beams/Standing lamps 70
Rear fog lamp 70
Interior lamps 71
Reading lamps 71

Controlling the climate for pleasant driving:
Heating and ventilation/ Air conditioner 72
Seat heating 77

Interior conveniences:
Glove compartment 78
Storage compartments 78
Beverage holder 80
Cellular phone 81
Ashtray 81
Cigarette lighter 82

Loading and transporting:
Cargo loading 83

CarManuals2.com

Operation, care and maintenance

Special operating instructions:
Break-in procedures 86
Driving notes 87
Catalytic converter 87
Antilock Brake System (ABS) 88
Dynamic Brake Control (DBC) 90
Disc brakes 90
Brake system 92
Winter operation 92
Power steering 94
Cellular phone 94
Car radio reception 95
Wind deflector 95
Hardtop 96

Wheels and tires:
Tire inflation pressure 99
Tire condition 99
Tire replacement 100
Tire rotation 101
Wheel and tire combinations 102
Special features of winter tires 103
Snow chains 103
Approved wheel and tire specifications 104

Under the hood:
Hood 105
Engine compartment 108
Washer fluids 110
Washer nozzles 110
Engine oil 111
Coolant 113
Brake fluid 114
Vehicle Identification Number 115

Maintenance and care:
The BMW Maintenance System 116
Caring for your vehicle 117
Airbags 123
Vehicle storage 124

Laws and regulations:
Technical modifications 125
California Proposition 65 Warning 125
OBD interface socket 126

Contents

Owner service procedures

Replacement procedures:
Onboard tool kit 130
Windshield wiper blades 130
Lamps and bulbs 131
Changing a wheel 137
Battery 138
Fuses 140

In case of electrical malfunction:
Fuel filler door 142
Luggage compartment lid, storage compartment 142
Passenger door 143
Closing the convertible top 143

Giving and receiving assistance:
Jump-starting 145
Towing the vehicle 146

Advanced technology

Airbags 150
Car radio reception 151
Dynamic Stability Control (DSC) 152
Safety belt tensioner 153
Interior rearview mirror with automatic dimmer 154
Xenon lamps 155

Technical data

Engine data 158
Dimensions 159
Weights 160
Capacities 161
Electrical system 162
Drive belts 162

CarManuals2.com

Everything from A to Z 166

CarManuals2.com

CarManuals2.com

Cockpit 16
Instrument cluster 18
Indicator and warning lamps 20
Hazard warning flashers 24
Warning triangle 24
First-aid kit 24
Refueling 25
Fuel quality 26
Tire inflation pressure 26

CarManuals2.com

Overview

Controls and features

Operation, care and maintenance

Owner service procedures

Advanced technology

Technical data

Index

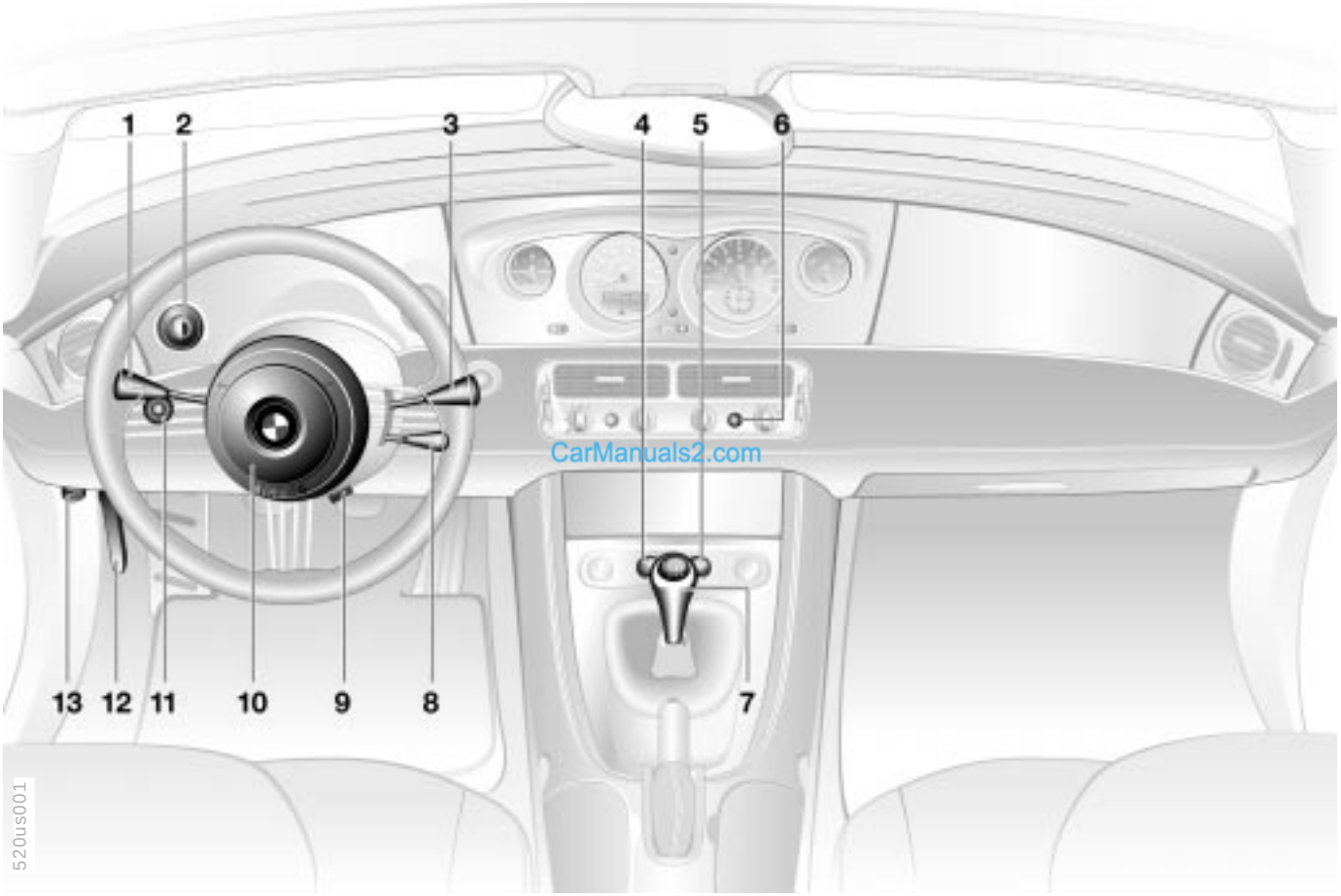

CarManuals2.com

Cockpit

1 ▷ Turn signal indicator 58
▷ Standing lamps 70
▷ High beams 70
▷ Headlamp flasher 58

2 Parking lamps/Low beams 69

3 Washer/Wiper system 59

4 Hazard warning flashers 24

5 Central locking system 32

6 Rear window defroster for the hardtop 60

7 Shift lever 58
To engage reverse gear, pull the lever across the gate to the left to overcome the detent

8 Cruise control 61

9 Adjusting the steering wheel 47

10 Horn: entire surface

11 Rear fog lamp 70

12 Unlocking the hood

13 ▷ Unlocking the luggage compartment lid 37
▷ Unlocking the fuel filler door 25

CarManuals2.com

Instrument cluster

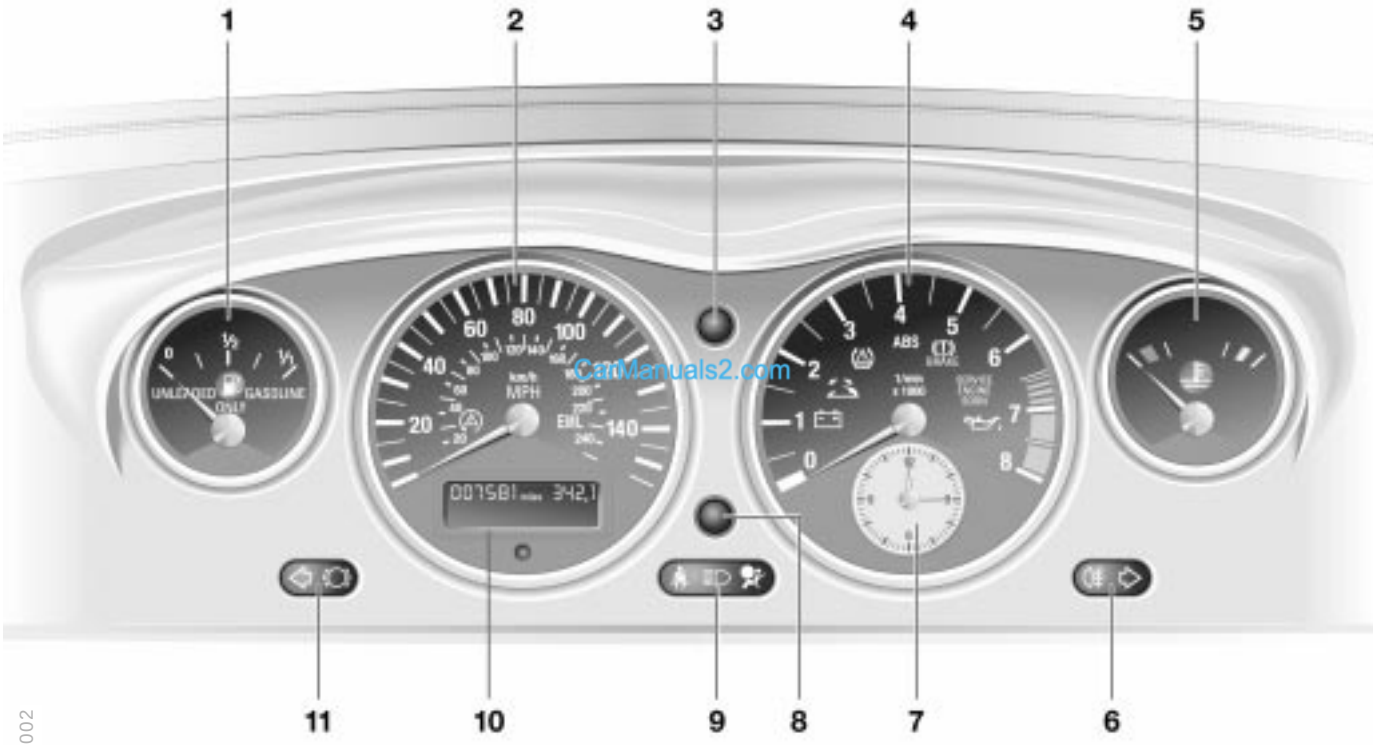

520us002

Instrument cluster

1 Fuel gauge with indicator lamp for fuel reserve 62

2 Speedometer with indicator and warning lamps for
- ▷ Dynamic Stability Control (DSC) 22
- ▷ Engine electronics 22

3 Instrument panel lighting 69

4 Tachometer 62
with indicator and warning lamps for:
- ▷ Battery charge current 20
- ▷ Convertible top operation 41
- ▷ Flat Tire Monitor 20
- ▷ Antilock Brake System (ABS) 21
- ▷ Parking brake/Brake hydraulic system/Cornering Brake Control (CBC) 20
- ▷ Service Engine Soon 22
- ▷ Engine oil pressure/Engine oil level 20, 21

5 Coolant temperature gauge with "Coolant temperature too high" warning lamp 63

6 Indicator and warning lamps for:
- ▷ Rear fog lamp 22
- ▷ Turn signal, right 23

7 Clock 64

CarManuals2.com

8 Control button for:
- ▷ Clock 64
- ▷ Trip odometer, reset to zero 62

9 Indicator and warning lamps for:
- ▷ Please fasten safety belts 21
- ▷ High beams 23
- ▷ Airbags 21

10 Indicator for:
- ▷ Odometer 62
- ▷ Trip odometer 62
- ▷ Service Interval 63

11 Indicator and warning lamps for:
- ▷ Turn signal, left 23
- ▷ Brake pads 22

Technology that monitors itself

Indicator and warning lamps identified by "●" are tested for proper operation whenever the ignition key is turned. They each light up once for different periods of time.

The indicator lamps signal defects in monitored systems by either remaining lit after the engine is started or by coming on in the course of normal vehicle operation. Refer to the following section for detailed information on how to respond to the various types of warnings.

Red: stop immediately

CarManuals2.com

Battery charge current ●
The battery is no longer being charged. Indicates a defect in the alternator drive belt or the charging circuit. Please contact the nearest BMW center.

Never attempt to continue driving if the drive belt is defective: the engine could overheat and sustain serious damage. A broken or damaged drive belt will also lead to a sudden increase in steering effort.◀

Engine oil pressure ●
Stop vehicle immediately and switch off engine. Check the engine oil level and top up as required. If the oil level is correct, please contact the nearest BMW center.

Do not continue driving. The engine could sustain damage owing to inadequate lubrication.◀

Flat Tire Monitor ●
Flashing warning lamp in addition to an acoustic signal: a flat tire has occurred. Carefully reduce speed to less than 50 mph (80 km/h), and avoid hard braking or steering maneuvers.
For additional information, refer to page 67.

Brake warning lamp ●
If the lamp comes on when the parking brake is not engaged, check the brake fluid level. Before driving further, be sure to read the notes on pages 92 and 114.

Brake warning lamp for Canadian models.

Red and yellow: continue driving cautiously

The red brake warning lamp comes on together with the yellow indicator lamps for ABS and DSC:
The entire ABS, CBC, DSC and DBC control system has failed. Continue driving cautiously and defensively. Avoid hard brake applications. Please have the system checked by your BMW center as soon as possible.
For additional information, refer to pages 65, 88.

Warning lamps for Canadian models.

Red: an important reminder

Brake warning lamp ●
Comes on when the parking brake is applied – an additional acoustic signal sounds when the vehicle is set in motion.
For additional information, refer to page 57.

Brake warning lamp for Canadian models.

Please fasten safety belts ●
Together with an acoustic signal. Comes on until the safety belts are fastened.
For additional information on safety belts, refer to page 50.

Airbags ●
Please have the system inspected by your BMW center.
For additional information, refer to pages 51, 150.

Yellow: check at the earliest opportunity

Antilock Brake System (ABS) ●
ABS has been deactivated in response to system malfunction. Unrestricted conventional brake system performance remains available. Please have the system inspected by your BMW center.
For additional information, refer to page 88.

Antilock Brake System (ABS) warning lamp for Canadian models.

Engine oil level
Comes on while driving: the oil level is at the absolute minimum; add engine oil as soon as possible. Do not drive more than approx. 30 miles (50 km) until you add oil.
For additional information, refer to page 111.

Engine oil level
Comes on after the engine has been shut off: add engine oil at the earliest opportunity (when you stop to refuel).
For additional information, refer to page 111.

CarManuals2.com

Brake pads ●
Have the brake pads checked.
For additional information, refer to page 92.

Dynamic Brake Control (DBC) ●
Malfunction in the DBC system. The brake system continues to provide unrestricted conventional performance.
For additional information, refer to page 90.

Dynamic Brake Control (DBC) warning lamp for Canadian models

Dynamic Stability Control (DSC) ●
Indicator lamp flashes:
The system is actively regulating engine torque and braking force.
If the indicator lamp does not go out after the engine is started, or if it comes on during normal driving and stays on: DSC has been switched off or has been deactivated because of a malfunction. In the event of a malfunction, have the system checked by your BMW center.
For additional information, refer to page 65.

Service Engine Soon ●
If the indicator lamp comes on either continuosly or intermittently, this indicates a fault in the emissions-related electronic systems. Although the vehicle remains operational, you should have the systems checked by your BMW center at the earliest possible opportunity.
For additional information, refer to page 126.

Service Engine Soon warning lamp for Canadian models.

Electronic engine-management system
Malfunction in the electronic engine-management system. The electronics revert to a default mode permitting continued operation, but at lower than usual engine speeds and with reduced power. Please have the system inspected by your BMW center.

Yellow: for your information

Rear fog lamp
Lights up whenever the rear fog lamp is turned on.
For additional information, refer to page 70.

CarManuals2.com

Green: for your information

Turn signal indicator
Flashes when the turn signals are operated. Rapid flashing indicates a system malfunction.
For additional information, refer to page 58.

Blue: for your information

High beams
Comes on when the high beams are on or the headlamp flasher is activated.
For additional information, refer to pages 58, 70.

CarManuals2.com

Hazard warning flashers

The button flashes continuously when the hazard warning flashers are on.

To help you locate the button at night, the button is also illuminated whenever the vehicle's lamps are on.

Warning triangle*

The warning triangle is stored beneath a floor panel located in the luggage compartment.

Always observe all legal regulations requiring a warning triangle to be carried in the vehicle.◀

First-aid kit*

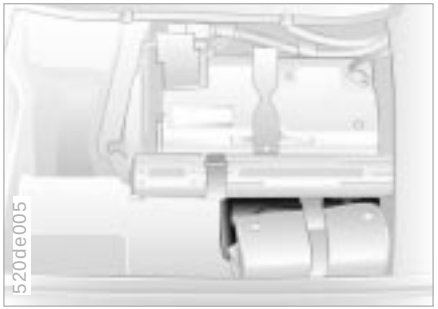

The first-aid kit is located under the luggage compartment's floor panel beneath the onboard tool kit.

Some of the articles in the first-aid kit may be used within a limited time only. Check the expiration dates of each of the items regularly, and replace any whose expiration dates have passed. You can get replacements in any drugstore or pharmacy.
Always observe all legal regulations requiring a first-aid kit to be carried in the vehicle.◀

CarManuals2.com

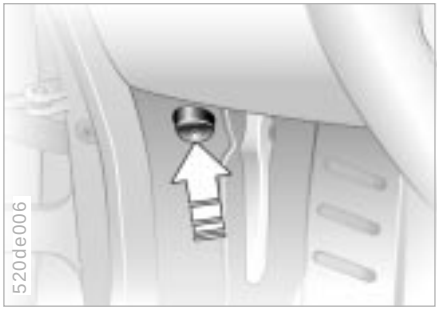

Fuel filler door

Before filling the tank, shut off the engine. If you do not, fuel cannot flow into the tank and the Service Engine Soon lamp may come on.◀

Press on the lower part of the button to open (fuel pump symbol).

To unlock the fuel filler door if the central locking system malfunctions, refer to page 142.

Always observe all safety precautions posted at the service station when handling fuel.
Never carry spare fuel containers in your vehicle. Whether empty or full, these containers can leak, cause an explosion, or lead to fire in the event of a collision.◀

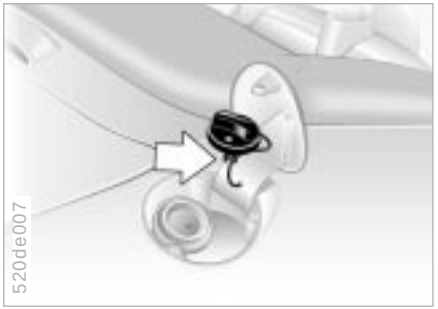

Simple and environmentally friendly

Open the filler cap carefully to prevent fuel from spraying out.
Fuel spray may cause injury.
Do not top off. Topping off may cause fuel spillage.◀

Store the cap in the holder provided on the inside of the fuel filler door while refueling.

When refueling, insert the filler nozzle completely into the filler pipe. Pulling the nozzle out of the pipe during refueling

▷ results in premature pump shutoff
▷ and will reduce the effect of the vapor recovery system on the pump.

If the filler nozzle is used correctly, the fuel tank is full when it shuts off for the first time.

Tank capacity, approx. 19.3 gal. (73 liters), incl. a reserve capacity of approx. 2.5 gal. (10 liters).

Close the filler cap carefully after refueling until a "click" is heard.
While closing, be sure not to squeeze the strap which is fastened to the cap.
A loose or missing cap will activate the Service Engine Soon lamp.◀

CarManuals2.com

Fuel quality

The engine uses lead-free gasoline only.

Required fuel:

▷ Premium Unleaded Gasoline, min. 91 AKI
AKI = Anti Knock Index

Do not use leaded fuels. The use of leaded fuels will cause permanent damage to the system's oxygen sensor and the catalytic converter.◀

Tire inflation pressure

You will find the tire inflation pressures on the door pillar (visible with door open).

Check tire pressures

All pressure specifications are indicated in psi (kilopascal) for cold tires at ambient temperature (refer also to the next page).

Remember to reactivate the Flat Tire Monitor after every wheel or tire change, refer to page 67.◀

Check tire inflation pressures regularly – at least every two weeks and before each extended journey. Otherwise, incorrect tire pressure can lead to poor handling, tire damage and accidents.◀

Comply with tire approval specifications

The inflation pressures in the table apply to tires made by BMW-approved manufacturers. Your BMW center is familiar with these pressures. Higher pressures may be specified for tires made by other manufacturers.
You will find a list of approved tire sizes on page 104.

Your vehicle is equipped with tires that not only meet US standards, but also European standards. We recommend the exclusive use of BMW-approved tires.

CarManuals2.com

Tire inflation pressure

BMW	Tires All pressure specifications in the table are indicated in psi (kilopascal) for cold tires (cold = ambient temperature)		
	Front: 245/45 R 18 96 W	35 (240)	–
Z8	Rear: 275/40 R 18 99 W	–	35 (240)
	245/45 R 18 96 H M+S	41 (280)	33 (230)

CarManuals2.com

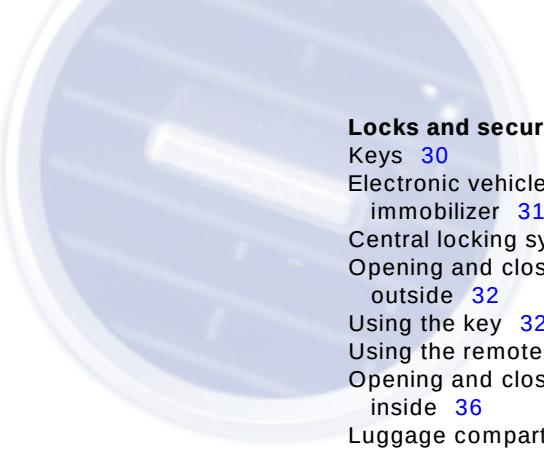

Locks and security systems:
Keys 30
Electronic vehicle immobilizer 31
Central locking system 32
Opening and closing – from the outside 32
Using the key 32
Using the remote control 33
Opening and closing – from the inside 36
Luggage compartment lid 37
Alarm system 38
Electric power windows 40
The automatic convertible top 41

Adjustments:
Seats 45
Steering wheel 47
47
Vehicle Memory, Key Memory 49

Passenger safety systems:
Safety belts 50
Airbags 51
Transporting children safely 53

CarManuals2.com

Driving:
Ignition and steering lock 55
Starting the engine 56
Switching off the engine 57
Parking brake 57
Manual transmission 58
Turn signal indicator/Headlamp flasher 58
Washer/Wiper system 59
Rear window defroster 60
Cruise control 61

Everything under control:
Odometer 62
Tachometer 62
Fuel gauge 62
Coolant temperature gauge 63
Service Interval Display 63
Clock 64
Multi-Information Radio (MIR) 64

Technology for safety and driving convenience:
Dynamic Stability Control (DSC) 65
Dynamic Performance Control 66
Flat Tire Monitor 67

Lamps:
Parking lamps/Low beams 69
Instrument lighting 69
High beams/Standing lamps 70
Rear fog lamp 70
Interior lamps 71
Reading lamps 71

Controlling the climate for pleasant driving:
Heating and ventilation/ Air conditioner 72
Seat heating 77

Interior conveniences:
Glove compartment 78
Storage compartments 78
Beverage holder 80
Cellular phone 81
Ashtray 81
Cigarette lighter 82

Loading and transporting:
Cargo loading 83

CarManuals2.com

Overview

Controls and features

Operation, care and maintenance

Owner service procedures

Advanced technology

Technical data

Index

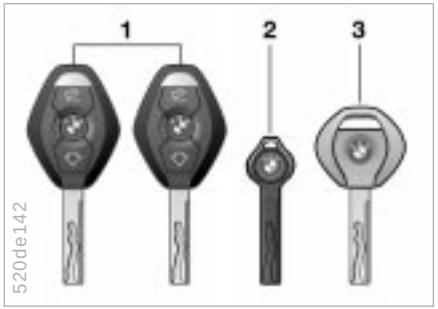

1 The Key Memory functions are stored in the remote-control key, refer to page 49
You can mark individual keys for subsequent identification by applyingh the colored decals that you received when accepting delivery of your vehicle

There is an extended-life battery in every master key that is charged automatically in the steering lock every time you drive.
For this reason, if you have a master key that is not in regular use, use that key approximately once every year while driving for an extended period to charge the battery. Also refer to page 33.◀

2 Spare key for storage in a safe place, such as in your wallet. This master key is not intended for continuous use

3 Door and ignition key
The lock for the glove compartment cannot be operated with this key. This is recommended for valet parking, etc.

There is a key case available for using your master key on a regular basis.

CarManuals2.com

Replacement keys

Replacement keys are available exclusively through your BMW center. Your BMW center is obligated to ensure that a person requesting a key is authorized to do so, since the keys are an integral element of the security system (refer to "Electronic vehicle immobilizer" in the following columns).

If possible, take all of the master keys that belong to the vehicle with you when you pick up your replacement key.
Whenever you receive a new replacement key, turn it once to position 2 in the ignition lock (ignition switched on) and then back, so that the electronic vehicle immobilizer can initialize the new key.◀

Electronic vehicle immobilizer

The key to security

The electronic vehicle immobilizer reduces your BMW's susceptibility to theft by rendering it impossible to start the engine using any means other than the car's own individual keys. The system operates automatically, with no action or intervention on your part. Your BMW center can cancel the system authorization for individual keys (for instance, if a key is lost). A deactivated key can no longer be used to start the engine.

Advanced electronics in action

At the heart of this system is an electronic chip that is integrated into the key. The lock mechanism itself is actually a dual-function device, simultaneously serving as a communications interface designed to allow the security system to maintain a continuous stream of variable, vehicle-specific signals with the electronic circuitry in the key. The system will release the ignition, electrical steering lock, fuel injection and starter for use only if it detects an "authorized" key.

▷ Exposure to external force can damage the key's integrated electronic circuitry and render it inoperative. A damaged key can no longer be used to start the engine or release the steering lock.◀

CarManuals2.com

The concept

The central locking system is ready for operation whenever the driver's door is closed. The system engages and releases the locks on the

- ▷ doors
- ▷ luggage compartment lid
- ▷ fuel filler door
- ▷ glove compartment
- ▷ cellular phone holder.

The central locking system can be operated

- ▷ from the outside via the driver's door lock or by using the remote control
- ▷ from the inside by pressing a button.

If you initiate central locking from inside, neither the fuel filler door, the glove compartment, nor the cellular phone holder are locked (refer to page 36).
If you do set it from outside, the anti-theft alarm is automatically activated as well. This prevents the door handles from unlocking the doors. The alarm system is also activated or deactivated.

The central locking system unlocks automatically in the event of an accident. In addition, the hazard warning flashers and interior lamps come on.

Opening and closing – from the outside

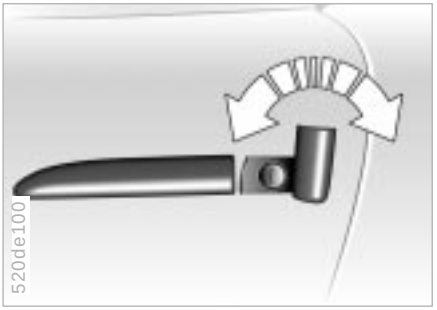

Using the key

Swing the door lock mechanism's cover upward. Return it to its original position and allow the detent to engage when you have finished locking or unlocking the doors.

Turn the key in the driver's door once to unlock the driver's door only; turning the key a second time will unlock the passenger door, the luggage compartment lid, the fuel filler door, the glove compartment, and the cellular phone holder.

If necessary, you can open the fuel filler door by pressing the button inside the vehicle; refer to page 25.

You can have various signals set as an acknowledgment message when locking.◀

Convenience operation

You can also operate the windows via the door lock.

- ▷ To open: with the door closed, turn the key to the "Unlock" position and hold it
- ▷ To close: with the door closed, turn the key to the "Lock" position and hold it.

As the windows are closing you should always monitor their path and progress to ensure that no injuries occur. Release the key to stop the windows.◀

Manual operation

(in the event of electrical malfunction)

Turn the key to the extreme left or right to unlock/lock the driver's door.
Refer to page 143 for operating the passenger door.

CarManuals2.com

Using the remote control

Remote control offers you optimal convenience in using your vehicle's locking system while also providing three exclusive supplementary features:

- ▷ Interior lamp activation, refer to page 34.
  With this function, you can also "search for" your vehicle – if, for example, it is parked in an underground garage.
- ▷ Opening the luggage compartment lid, refer to page 35
- ▷ Panic mode, refer to page 35.
  In case of danger, you can trigger an alarm.

The anti-theft system is also deactivated/activated simultaneously with the unlocking or locking of the vehicle, and the alarm system is disarmed/armed, and the interior lamps are turned on/off.

Master keys

Keys with remote control are master keys. Refer to page 30.

You can have different confirmation signals programmed into the system to verify that the vehicle has been locked correctly.◀

CarManuals2.com

Because passengers or animals remaining in the vehicle could lock the doors from the inside, you should always remove the key and take it with you to ensure that you remain able to unlock the vehicle from the outside at all times.◀

Master keys that are used repeatedly are always ready for operation since the battery in the key is charged automatically in the steering lock every time you drive.
If it is no longer possible to unlock the vehicle via the remote control, the battery is discharged. Use this key while driving for an extended period in order to charge the battery. Refer also to page 30.
To prevent unauthorized use of the remote control, surrender only the door and ignition key 3 or the spare key 2 (refer to page 30) when leaving the vehicle for valet parking, for example.
In the event of a system malfunction, please contact your BMW center. You can also obtain replacement keys there.◀

Opening and closing – from the outside

CarManuals2.com

To unlock the vehicle

Press button 1.

Press the button once to unlock the driver's door only; press it a second time to unlock the passenger door, the luggage compartment lid, the fuel filler door, the glove compartment, and the cellular phone holder.

If necessary, you can open the fuel filler door by pressing the button inside the vehicle; refer to page 25.

Convenience opening mode

Press and hold button 1. The windows are then opened.

To lock and secure

Press button 2.

You can have different confirmation signals programmed into the system to verify that it has assumed active operational status.◀

To deactivate the tilt alarm sensor and interior motion sensor

Press button 2 again immediately after locking.
For additional information, refer to page 39.

To switch on the interior lamps

With the vehicle locked, press button 2.

To open the luggage compartment lid

Press button 3.

The luggage compartment lid opens slightly.

Before and after a trip, be sure that the luggage compartment lid has not been opened unintentionally.◀

Panic mode

You can respond to impending danger by pressing and holding button 3 for more than two seconds to trigger the alarm system by hand. The alarm system must be armed in advance for this function to operate.

To switch off the alarm, press button 1.

Interference from outside systems

The remote control system's performance may be affected by other equipment operating in the vehicle's vicinity. You can respond to problems of this nature by using the master key to engage and release the locks at the door.

For US owners only

The transmitter and receiver units comply with Part 15 of the FCC (Federal Communications Commission) regulations. Operation is governed by the following:

FCC ID: LX8EWS
LX8FZVS
LX8FZVE

Compliance statement:
This device complies with Part 15 of the FCC Rules. Operation is subject to the following two conditions:

- ▷ This device may not cause harmful interference, and
- ▷ this device must accept any interference received, including interference that may cause undesired operation.

Any unauthorized modifications to these devices could void the user's authority to operate the equipment.◀

CarManuals2.com

Use this button to operate the central locking system when the doors are closed. The doors and the luggage compartment lid are unlocked or locked only. The anti-theft alarm system is not activated.

You can also have the key preset to engage the central locking system as soon as you start to drive.◀

If only the driver's door was unlocked from the outside and you press the button,

CarManuals2.com

▷ the passenger door, the luggage compartment lid, the fuel filler door, the glove compartment and the cellular phone holder will be unlocked, when the driver's door is open

▷ the driver's door will be locked again if it is closed.◀

To unlock and open the doors

▷ Either unlock the doors together with the button for the central locking system and then pull each of the release handles above the armrests or

▷ pull the release handle for each door twice: the first pull unlocks the door, and the second one opens it.

To engage the locks

▷ Lock both doors using the button for the central locking.

Because passengers or animals remaining in the vehicle could lock the doors from the inside, you should always remove the key and take it with you to ensure that you remain able to unlock the vehicle from the outside at all times.◀

To unlock from the inside

Press on the upper half of the button (luggage compartment lid symbol).

The luggage compartment lid opens slightly.

This button will not open the luggage compartment lid if the glove compartment is locked. Refer to page 78.◀

CarManuals2.com

To open from the outside

Reach into the recess and open the luggage compartment lid all the way.

The luggage compartment is illuminated when the lid is opened.

Manual operation

Should the electrical system malfunction, the luggage compartment lid can be opened from the inside. Refer to page 142.

To close

The luggage compartment is locked again as soon as you close the lid.

As with all closing procedures, be sure that the travel path for the luggage compartment lid is clear when being closed to avoid injury.
Operate the vehicle only when the luggage compartment lid is completely closed. Otherwise exhaust fumes could penetrate the interior of the vehicle. If, however, the luggage compartment lid has to stay open and the convertible top is closed while driving,

- ▷ close all windows
- ▷ increase the air supply from the heating and ventilation system to a high level. Refer to page 74.◀

Emergency release

This lever releases the luggage compartment lid from the luggage compartment's interior.

The concept

The vehicle alarm system responds

CarManuals2.com

- ▷ when a door, the hood or the luggage compartment lid is opened
- ▷ to movement inside the vehicle (interior motion sensor)
- ▷ to variations in the vehicle's tilt angle such as those occuring during attempts to steal the wheels or tow the vehicle
- ▷ to interruption of battery voltage.

The system responds to attempts of unauthorized vehicle incursion and theft by simultaneously activating the following

- ▷ an alarm sounds for 30 seconds
- ▷ the hazard warning flashers are activated for approx. five minutes
- ▷ the high beams flash on and off in the same rhythm.

To arm and disarm the alarm system

When the vehicle is locked or unlocked via a door lock or with the remote control, the alarm system is also simultaneously armed or disarmed.
The interior motion sensor and tilt alarm sensor are activated approx.
30 seconds after you have finished locking the vehicle.

The system indicates that it has been correctly armed by switching on the hazard warning flashers for a single cycle and by emitting an acoustic signal.

You can select the individual confirmation signal used to indicate that the alarm system has been armed or disarmed.◀

Indicator lamp displays

The indicator lamp is located in the inside rear view mirror's rotary knob.

- ▷ The indicator lamp flashes continuously: the system is armed
- ▷ The indicator lamp flashes during arming: a door, the hood or luggage compartment lid is not completely closed. Even if you do not respond by securing the affected area, the system starts to monitor all other points and the indicator lamp reverts to continuous, uninterrupted operation once ten seconds have elapsed. The interior motion sensor remains off
- ▷ The indicator lamp goes out during disarming: no manipulation or attempted intrusions have been detected in the period since the system was armed
- ▷ The indicator lamp flashes for 10 seconds when the system is disarmed: an attempted entry has been detected in the period since the system was armed.

Following triggering of an alarm, the indicator lamp will flash continuously.

Avoiding unintentional alarms

The tilt alarm sensor and interior motion sensor may be switched off at the same time to prevent a false alarm from being triggered (in garages with elevator ramps, for instance), or when the vehicle is transported by trailer or train:

Lock the vehicle twice (= arm the system) by pressing button 2 on the remote control twice in succession (refer to page 34), or lock the vehicle twice with the key (refer to page 32). The indicator lamp lights up briefly and then flashes continuously. The tilt alarm sensor and the interior motion sensor remain deactivated for as long as the system is armed.

CarManuals2.com

Interior motion sensor

In order for the interior motion sensor to function properly, the windows and the luggage compartment lid must be closed.

Nevertheless, you should deactivate the interior motion sensor (refer to the previous column) if

- ▷ children or animals are left in the vehicle
- ▷ windows should remain open.

▷ For US vehicles only:
The interior motion sensor is not installed on US models as it has not received FCC (Federal Communications Commission) approval.◀

To open and close the windows

From ignition key position 1:

▷ Depress the rocker switch 1 until you feel resistance:
The window remains in motion for as long as you maintain pressure on the switch

▷ Briefly press rocker switch 1 to just beyond the initial point of resistance (one-touch mode):
The window automatically remains in motion until it reaches the end of its travel. Briefly press the switch a second time to stop the window.

The one-touch mode cannot be used to close the passenger-side window.◀

Use switch 2 to select the window you wish to open or close:

▷ Driver's window
Push the switch all the way to the left

▷ Passenger-side window
Push the switch all the way to the right

▷ To activate both windows at the same time:
Move the switch to the center position.

The switch on the passenger-side door activates the window for that side only.

After the ignition has been switched off:

Provided that no door is opened in the intervening period, the electric power windows remain available for operation for up to 15 minutes.

CarManuals2.com

Because the power windows are sealed at high pressure to prevent wind noise when closed, a powerful motor is required for efficient closing. When closing the windows, always ensure that they are not obstructed in any way. Unsupervised use of these systems can result in serious personal injury. Remove the ignition key to deactivate the electric power windows whenever you leave the vehicle. Never leave the keys in the vehicle with unsupervised children.
Never place anything that could obstruct the driver's vision on or next to the windows.◀

To use the convenience mode via the door lock or the remote control, refer to page 32 or 34.

Weather protection

The fabric convertible top combines reliable protection from the elements with simple, convenient operation. Here are a few tips to ensure that you enjoy your BMW Z8 roadster.

It is advisable to close the convertible top when the vehicle is parked. The closed convertible top not only protects the passenger compartment from unforeseeable damage from the weather, it also provides a certain degree of theft protection. Even if the convertible top is closed, store your valuables only in the locked luggage compartment.

To prevent damage to its rear window, avoid opening or closing the fabric top unless the temperature is well above freezing.

Operate the convertible top only when the vehicle is stationary, otherwise the procedure will be interrupted. Driving before the opening or closing procedure has been properly concluded can lead to damage or injury.

CarManuals2.com

Do not lay objects on the convertible top, since they would fall off when the convertible top is operated and cause damage or injuries.

Make sure that no objects or people get in the way while the convertible top is opening or closing, so that no damage or injuries occur.

The automatic operating procedure is interrupted immediately if the switch for actuating the top is released. The procedure can be continued in the desired direction by pressing this switch.◀

To open

From ignition key position 1:
If at all possible, only operate the convertible top if the engine is running to avoid discharging the battery.

Press and hold the switch in the "Open" (1) direction until the opening procedure has been completed with the convertible top being stored in the convertible top compartment and the indicator lamp on the instrument cluster (refer to page 18) has gone out.

The side windows will lower slightly when the convertible top is being opened. To reclose the side windows, maintain pressure on the switch after the indicator lamp goes out.

The indicator lamp stays on while the convertible top is in motion. If the opening procedure has not been completed, the indicator lamp will blink after you release the switch.

In order to avoid subsequent moisture damage, do not leave the convertible top retracted when it is wet (refer also to the chapter on vehicle care beginning on page 118).◀

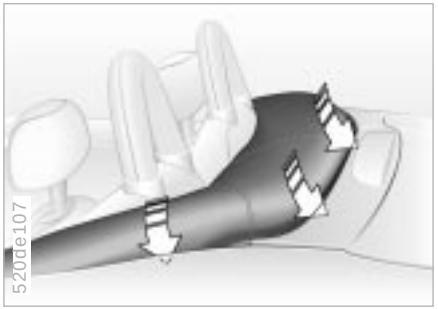

To mount the cover

In order to avoid damage or getting dirt on the inside of the convertible top, always drive with the convertible top cover installed.◀

CarManuals2.com

Remove the folded cover from the luggage compartment and extract it from its protective slip case.

1. Unfold the cover and lay it out on top of the convertible top
2. Guide the cover tabs into the slots at the front, first on the right side, then on the left (see arrows or detail)

While guiding the tabs in, use one hand to press the inside part of the convertible top down inside, so that it does not get jammed in or damaged.◀

3. Circling it around, push the cover under the rear edge of the convertible top well. Lightly pounding on the cover makes it easier to attach properly

4. Press on both left and right sides to lock the cover in place
5. Pull the button to verify that the locking mechanism is engaged securely.

The cover lock responds by alternately engaging and releasing with each successive application of pressure.◀

Be sure that the cover is properly secured on the vehicle. If it is not firmly secured, air pressure could loosen the cover at higher speeds.◀

To remove the cover panel

Follow the same steps as for assembly, however, in reverse sequence.

After removal, slide the two outside ends of the cover under the retaining strap, then tilt in the middle and fold toward the outside (leather on leather).

After folding the cover, insert it in the protective casing for subsequent storage in the luggage compartment.

CarManuals2.com

Closing

1. Push the switch toward "Close" (2) and maintain pressure until the automatic closing process is completed, just before the top frame comes to rest against the windshield header rail.
   The side windows automatically retract and remain lowered slightly for the duration of the closing procedure

2. Insert your finger in the recess to press the button. Maintain pressure on the button
3. Pull the convertible top frame onto the window frame's header rail. The button you are pressing releases the automatic locking mechanism that attaches the top frame to the header rail.
   The closing procedure is finished after you hear the locking device audibly click into place; the indicator lamp on the instrument cluster will then go out (refer to page 18).
   To reclose the side windows, maintain pressure on the button in the recess after the indicator lamp goes out.

CarManuals2.com

The indicator lamp stays on while the convertible top is in motion. The indicator lamp will blink if you release one of the buttons before the closing procedure has been completed.

Power loss or malfunction

Should the electrical system malfunction, an opened convertible top can be closed manually. Refer to page 143.

Wind deflector

Refer to page 95.

Hardtop

Refer to page 96 and following.

For maximum safety when adjusting the seating position, please observe the following:

Never try to adjust your seat while driving the vehicle. The seat could respond with un unexpected movement, and the ensuing loss of vehicle control could lead to an accident.
Be sure that the safety belt remains firmly against your body at all times. In the event of a frontal impact, a loose lap belt could slide over the hips, leading to abdominal injury. In addition, the safety belt's restraint effectiveness is reduced if the belt is worn loosely.
Never ride with the backrest reclined to an extreme angle (especially important for the passenger to remember). If you do so, there is a risk that you will slide under the safety belt in an accident, thus reducing the protection provided by the safety belt.◀

CarManuals2.com

Correct sitting posture

To reduce strain on the spinal column, sit all the way back in the seat and rest your back fully against the backrest. The ideal sitting posture is achieved with your head extending from your spine in a straight line.
For long-distance driving, you may wish to increase the backrest tilt-angle slightly to reduce muscular tension.
You should be able to grasp the steering wheel at its highest point with your arms slightly bent.

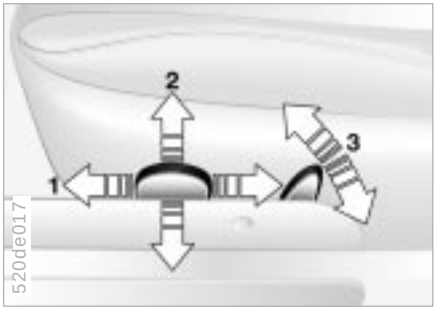

1 Backward/Forward adjustment
2 Cushion height
3 Backrest angle

Adjust the head restraint manually.

Ensure that the backrest detent is fully engaged before sliding the seat to the rear. If the seat is moved back with the backrest folded forward, the detents may not engage during subsequent attempts to return the backrest to its upright position. Both the rear of the backrest and the upholstery in the rear storage well may sustain damage as a result. Always ensure that the backrest is not reclined to an excessively steep angle when sliding the seat back: failure to observe this precaution can result in damage to both the upholstery in the rear storage well and to the backrest itself.◀

Head restraints

Adjustments

Upward: by pulling.

Downward: unlock by first pressing the button located on the right under the leather (arrow 1).

Head restraints reduce the risk of spinal injury in the event of an accident.
Adjust the head restraint so that its center is approximately level with your ears.◀

Seat backrest

To unlock

Pull on the outermost edge of the strap and tip the backrest forward.

The strap for the driver's backrest is located on the outside, while the passenger's seat is equipped with release straps on both the left and right sides of the backrest.

CarManuals2.com

Lock both backrests while driving, otherwise there is a danger of an unexpected movement causing an accident.
Do not use the strap as a holder, e.g. for newspapers or other items. This could cause the backrests to unlock.◀

Belt guide

The strap for the belt guide can be opened: release the push button.

This feature can be used to facilitate access to the rear storage well for loading and when using equipment features on the rear bulkhead.

For further information regarding loading, refer to page 83.

Before each trip, insert the safety belt into the guide strap, otherwise, it will not hold securely and lose its effectiveness as a restraint device, as it will be too loose.◀

Adjusting the steering wheel

Press the button to move the steering wheel forward or back to suit your selected seating position.

Do not adjust the steering wheel while the vehicle is moving. If you do so, there is a risk of accident from unexpected movement.◀

CarManuals2.com

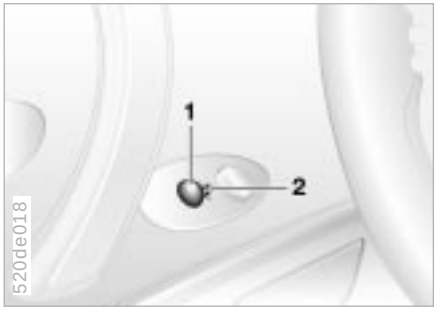

Exterior mirrors

1 Switch for 4-way adjustment

2 Selection switch for changing between mirrors, switch either all the way to the left or the right

You can also adjust the mirrors manually by pressing against the outer edges of their lenses.

CarManuals2.com

When estimating the distance between yourself and other traffic, bear in mind that the objects reflected in the mirror are closer than they appear. This means that estimates of the distance to following traffic should not be regarded as precise.◀

Electric defrosting

Both mirrors are automatically defrosted with the ignition key in position 2.

Interior rearview mirror with automatic dimmer

This mirror automatically responds to ambient light and headlight glare from following vehicles by dimming through an infinitely-variable range. The dimming function is regulated by two photocells; one is integrated in the mirror's frame (arrow), while the other is located at an offset position on the rear of the mirror.

The mirror switches to its clear, undimmed mode whenever you shift into reverse.

For trouble-free operation, keep the photocells clean and do not cover the area between the interior rearview mirror and the windshield. Do not attach any kind of stickers on the windshield in front of the mirror, either.

For a more detailed explanation of the electrochromatic technology used in this mirror, please refer to page 153.

The concept

CarManuals2.com

No doubt you have reflected at one time or another on how great it would be if you could permanently configure your vehicle's various features and adjustments to mirror your own individual preferences. In developing the Z8, BMW has incorporated a number of options for personal adjustment that can be programmed into your vehicle by your BMW center.

The available configuration data fall into two categories, according to whether their primary orientation is the vehicle ("Vehicle Memory") or the individual ("Key Memory"). Provided that each person has a separate remote-control key, you can have your BMW center enter adjustment data for as many as four different individuals into the system.

The system then relies on a bilateral data exchange to identify the individual user and dial in the selected settings whenever the remote-control unit is used to disengage the door locks.

What the system can do

Your BMW center can provide you with details on the capabilities of the Vehicle Memory and Key Memory systems. Below a few examples:

A Vehicle Memory sampler:

▷ Various signals to confirm release and engagement of the vehicle's locks.

▷ Activate/deactivate the "Follow me home" lamps.

A Key Memory sampler:

▷ Engage vehicle locks as soon as the vehicle is underway.

At various points throughout this Owner's Manual you will find this symbol, indicating that the equipment or system described in the adjacent section can be preset for automatic adjustment using the Vehicle or Key Memory.◀

Drive with your safety belt on

Fasten your safety belt at the beginning of every trip.

To fasten:
Make sure you hear the lock engage in the belt buckle.

To release:
Press the red button in the buckle. Hold the belt and guide it back into its reel.

For your safety, please comply with the following instructions for wearing safety belts. Otherwise, your personal safety will be diminished, and the safety belts' protective function impaired. The following information also applies to your passengers:
Never allow more than one person to wear a single safety belt. Infants or small children should never be held on the lap of a passenger.
Avoid twisting the belt while routing it firmly across the pelvis and shoulder, wear it as snugly against your body as possible. Do not allow the belt to rest against hard or fragile objects in your pockets. Never route the belt across your neck, do not run it across sharp edges and ensure that the belt does not become caught or jammed.
Avoid wearing bulky clothing and pull on the belt periodically to retension it over your shoulder. In the event of a frontal impact, a loose lap belt could slide over your hips, leading to abdominal injury. In addition, the safety belt's restraint effectiveness is reduced if the belt is worn loosely.

CarManuals2.com

Expectant mothers should always wear their safety belts, taking care to position the lap belt against the lower hips, where it will not exert pressure against the abdominal area.◀

For care instructions, refer to page 121.

If the safety belt system has been subjected to the stresses involved in an accident or damaged in any other way, have the complete mechanism replaced by your BMW center, including the safety belt tensioner and the belt anchorages checked. If a child-restraint system* is in the vehicle during an accident, consult the manufacturer's instructions regarding replacement.◀

Child-restraint systems*

Since your vehicle is equipped with an airbag for the front passenger, never use any rear-facing child-restraint systems on the front passenger seat, otherwise serious injuries can occur if the airbag is triggered. Never modify a child-restraint system in any way, as the result could be reduced protection for your child.◀

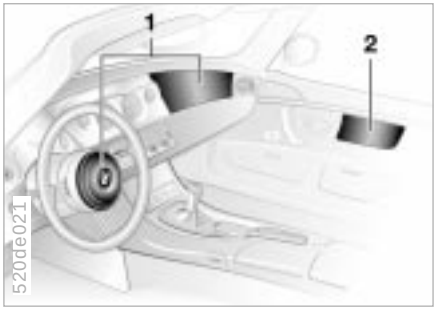

1 Front airbag on driver and passenger side

2 Side airbags on driver and passenger side

Protection

The front airbags protect the driver and passenger in the event of severe frontal impacts in which a safety belt alone is not enough to provide optimal protection. The side airbags help provide protection in the event of a collision from the side. Each of the side airbags is designed to help support the seat occupant's upper body.

The illustration shows the system's effective response range; major impacts occuring within this area will initiate airbag deployment.

▷ The airbags do not respond to minor impacts, if the vehicle rolls over, or if the vehicle is hit from the rear.◀

Indicator lamp

The indicator lamp in the instrument cluster comes on to confirm the system's operational status from ignition key position 1.

System operational:

▷ The indicator lamp comes on briefly then goes out.

System malfunction:

▷ The indicator lamp fails to come on

▷ The indicator lamp comes on briefly before going out and then lighting up again.

A system malfunction could prevent the system from responding to a high-intensity impact sustained within its normal response range.

Have your BMW center inspect the system immediately.

Sitting correctly with airbags

Comply with the following instructions for the airbags, otherwise, the airbags may not be able to provide their maximum protection, with resulting risks to personal safety. All passengers in the vehicle should be aware of and comply with this information:
The airbag is a supplemental restraint device; it is not a substitute or replacement for your safety belt, which you should continue to wear at all times.
When adjusting your seat, assume a comfortable driving posture allowing comfortable and secure access to all of the vehicle's controls. Avoid sitting too close to the steering wheel.
Always hold the steering wheel by the rim – hands in the "9 o'clock" and "3 o'clock" positions – otherwise, your hands or arms could be injured if the airbag is triggered.
Never allow any other passengers, animals or objects to intrude into the area between the airbag and the driver or front passenger.
Do not use the cover panel above the front passenger airbag as a storage area.
Do not apply adhesive materials to the cover panels of the airbags, or cover or modify them in any other way.
Do not use a rear-facing child seat in the front passenger seat. If you use a child-restraint system, carefully read and comply with the instructions on page 53.
Be sure that child seats are installed correctly and with the greatest possible distance between them and the side airbag. Do not allow children to lean out of the child's seat in the direction of the side trim panels. If they do so, serious injuries can occur if the airbag is triggered.◀

CarManuals2.com

Even when all these guidelines are observed, there is still a small residual risk of injury to the face, hands and arms occurring from airbag deployment in isolated instances.
The ignition and inflation noise may cause a mild temporary hearing loss in extremely sensitive individuals.

You will find the proper airbag safety precautions on both sun visors and on the instrument cluster (US models).

For additional information concerning the airbag system, refer to pages 123 and 150.

The illustration shows the correct seating position for a child in a child-restraint system* with sufficient distance between the child and the side airbag (arrow).

Transporting children safely

The illustration shows the correct seating position for an older child wearing a safety belt with sufficient distance between the child and the side airbag (arrow).

Before installing any child-restraint device or child seat, please read the following:
Never install a rear-facing child-restraint system in the passenger seat of this vehicle.
If the airbag deploys and hits the back-rest of the rear-facing child seat, it is likely that the child sitting in the rear-facing child seat will be seriously injured or killed.
If it is necessary for a child (not an infant) to ride in the vehicle, certain precautions should be taken. First, move the passenger seat as far away from the dashboard as possible. This important precaution is intended to maximize the distance between the airbag and the child. Older children should be tightly secured with the safety belt. Younger children should be secured in an appropriate forward-facing child-restraint system that has first been secured with a safety belt.

In the interest of the child's safety, please carefully read and comply with the instructions for installation and use provided by the child restraint's manu-facturer whenever you use such a device.
Do not allow children to lean out of a child-restraint system toward the door or dashboard, as otherwise serious injuries may result if the airbag deploys.
Always ensure that all occupants (of all ages) remain properly and securely restrained at all times.
Read carefully and comply with the safety precautions covering safety belts on page 50. If you do not, the protec-tive function of the safety belts will be limited.◀

CarManuals2.com

Child seat security

The safety belt on the passenger side can be locked for mounting and securing child-restraint systems.

A label with operating instructions is attached to the belt next to the sliding latch plate.

To lock the belt

Extract the entire length of the belt from the inertia reel mechanism. Allow the reel to retract the belt somewhat and engage the buckle, then tighten the belt against the child-restraint system. The retraction mechanism is now locked. The belt cannot be retracted further. Comply with the installation instructions provided by the manufacturer of the child-restraint system.

To release the belt

Release the buckle, remove the child-restraint system and allow the inertia reel to retract the belt completely.

CarManuals2.com

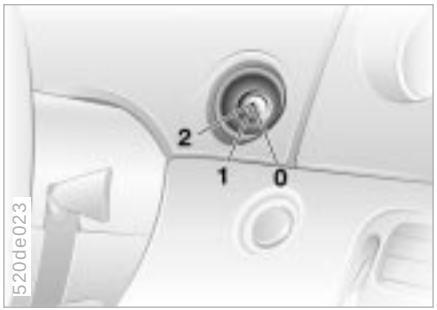

Your vehicle is equipped with an electrically powered steering lock mechanism.

To activate the electrical power supply and release the steering

▷ Insert key at position 1. The steering detent can be heard disengaging. If you encounter any resistance when turning the key to the right this indicates that the detent is still engaged: turn the steering wheel slightly to free the mechanism and turn the key. The vehicle immobilizer is deactivated

▷ The sound system and other electrical accessories are available for use when the ignition key is in position 1

▷ Turning the key to position 2 provides electrical power to the ignition and all remaining electrical systems.

CarManuals2.com

Removing the key

The key is removed in position 0. Turn the steering wheel to engage the steering lock and activate the electronic vehicle immobilizer.

▷ With a discharged or disconnected battery, the steering column will not be locked or unlocked. Leaving the key in the ignition uses up a minimal amount of power. In order to avoid discharging the battery, remove the key if the vehicle is to be parked for an extended period of time.◀

⚠ If the steering is locked and the battery discharged or disconnected, do not tow the vehicle, as it will not be possible to turn the steering wheel.◀

Before starting

▷ Engage the parking brake
▷ Make sure that the transmission is in neutral
▷ Depress the clutch pedal
▷ Turn ignition key to position 2.

⚠ Do not allow the engine to run in enclosed areas. The exhaust gases contain carbon monoxide, an odorless and colorless, but highly toxic gas. Breathing the exhaust gases poses an extreme health risk, and can lead to unconsciousness and death.
Do not leave the vehicle unattended with the engine running. An unattended vehicle with a running engine represents a potential safety hazard.◀

Do not press the accelerator pedal while starting the engine (pressing the starter button).

▷ Do not actuate the starter button for too short a time, but do not keep it pressed for more than approx. 20 seconds.◀

Do not allow the engine to warm up by leaving it running while the vehicle remains stationary. Instead, begin to drive immediately at a moderate engine speed.

Cold starts at very low temperatures, from approx. +5 °F (–15 °C) and at altitudes above 3,300 ft (1,000 meters):

CarManuals2.com

▷ On the first start attempt, engage the starter for a longer period (approx. 10 seconds).

Engine idle speed is controlled by the electronic engine-management system. A fast idle immediately after starting is normal and should decrease as the engine warms up. If the idle does not return to normal as the engine reaches normal operating temperature, service is required.

To prevent the battery from discharging, always deactivate electrical devices that are not in use. Switch the ignition off when the vehicle is not being driven.

Switching off the engine

Turn ignition key to position 1 or 0.

Never remove the ignition key while the vehicle is rolling. If you do so, the ignition lock would engage when the steering wheel is turned.
When you leave the vehicle, always remove the ignition key and engage the steering lock.
Always engage the parking brake when parking on hills and inclined surfaces, as first gear or reverse may not provide adequate resistance to rolling.◀

Parking brake

The parking brake is primarily designed to prevent the vehicle from rolling while parked. It operates on the rear wheels.

CarManuals2.com

To engage

The lock engages automatically when you lift the lever, and the indicator lamp in the instrument cluster comes on when the ignition key is in position 2. Refer to page 21.

To release

Pull up slightly on the lever, press the button and lower the lever.

If, in rare circumstances, it should be necessary to engage the parking brake while the vehicle is in motion, do not pull hard on the lever. Keep your thumb pressed against the release button while carefully pulling the lever up to apply moderate pressure.
Excessive pressure can lead to overbraking and loss of traction (fishtailing) at the rear axle.
The brake lamps do not come on when the parking brake is engaged.
Always engage the parking brake when parking on hills and inclined surfaces, as selecting first gear or reverse may not provide adequate resistance to rolling.◀

To avoid corrosion and one-sided braking, apply the parking brake lightly from time to time when coasting to a standstill (at a traffic signal, for instance), provided that it is safe to do so.

Every time you shift gears, always depress the clutch pedal all the way down, pushing the gear lever into the desired position.

Always remember to depress the clutch pedal when starting the engine; a lock-out device prevents starting when the clutch is engaged.

The shift lever's neutral plane is located between 3rd and 4th gears.

The shift lever automatically returns to the 3rd/4th plane whenever you select neutral.

CarManuals2.com

When shifting across the gate to the 5th/6th gear plane always remember to push the lever to the right to avoid inadvertent engagement of 3rd or 4th gear.◀

Reverse

Select only when the vehicle is stationary. Press the shift lever to the left to overcome the resistance.

As you do this, the backup lamp will turn on automatically when the ignition key is in position 2.

Never slip the clutch to prevent the vehicle from rolling backwards when stopping on hills. Slipping the clutch for extended periods leads to rapid, premature clutch wear.◀

Indicator/Headlamp flasher

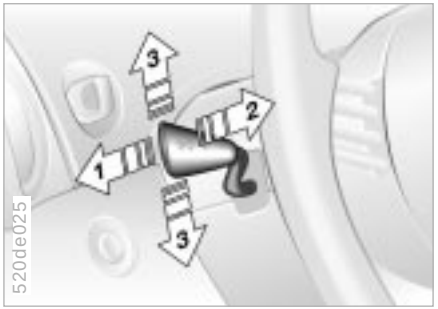

1 High beams (blue indicator lamp)

2 Headlamp flasher (blue indicator lamp)

3 Turn signal indicator (green indicator lamp and cyclical clicking from the blinker relay)

If the indicator lamp and the clicking from the relay are faster than normal, one of the turn signal bulbs is defective.

To signal briefly

Press the lever up to but not beyond the pressure point. It then returns to the center position when released.

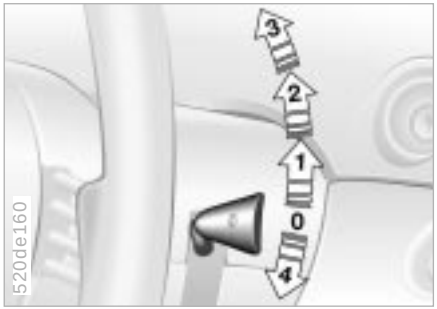

0 Wipers retracted
1 Intermittent mode
2 Normal wiper speed
3 Fast wiper speed
4 Brief wipe

0 Wipers retracted

The wipers are partially hidden behind the hood. To bring the wipers up into their vertical position (important when changing the blades, or folding up when frost is expected):
With the lever in position 1, switch off the ignition as soon as the wipers come to a stop.

For information on replacing the wiper blades, refer to page 130.

Fold the wipers back down onto the windshield before you turn the ignition key to position 1 or 2 again. If you do not, they could be damaged.◀

CarManuals2.com

1 Intermittent mode

Wiper delay varies automatically depending on actual road speed.

2 Normal wiper speed

The wipers automatically revert to intermittent mode when the vehicle is stationary.

3 Fast wiper speed

When the vehicle is stationary, the wipers operate at normal speed.

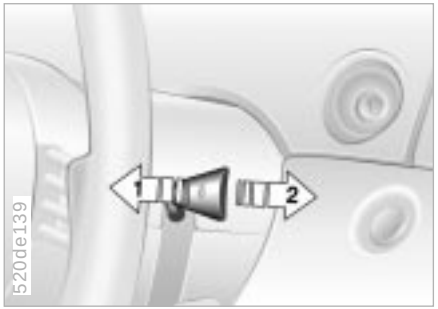

1 Clean windshield

2 Clean windshield/headlamps

1 Clean windshield

The system sprays washer fluid against the windshield and activates the wipers for a brief period.

If you only pull the lever briefly, the system sprays washer fluid onto the windshield without activating the wipers.

2 Clean windshield/headlamps

Automatic windshield washer and headlamp washers are activated. Every time they are actuated, both the windshield and the headlamps are cleaned.

Do not use the washers if there is any danger that the fluid will freeze on the windshield. If you do so, your vision could be obscured. Use an antifreeze agent. Refer to page 110.
Do not use the washers when the reservoir is empty. If you do so, the washer pump could be damaged.◀

Windshield washer jets

The windshield washer jets are heated automatically when the ignition key is in position 2.

CarManuals2.com

Rear window defroster

To activate

With the hardtop in place, press the button: as long as the indicator lamp remains on, the rear window defroster operates at high output (rapid thaw).

After the indicator lamp goes out, the defroster continues operating at reduced power for a limited period before deactivating automatically.

To deactivate

If the indicator lamp is on, press the button.

The indicator lamp is always active, however the rear window defroster will not work if the hardtop is not in place.◀

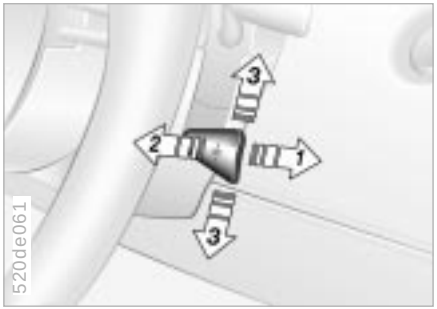

You can store and automatically maintain any desired vehicle speed above approx. 20 mph (30 km/h).

Refrain from using the cruise control on twisting roads, when high traffic density prevents driving at a constant speed, and when driving on slippery (snow, rain, ice) or loose (gravel, sand) road surfaces.◀

Store and maintain speed/accelerate

Press the lever briefly in direction 1: The system maintains the current vehicle speed. Every time you briefly press the lever, the speed increases by approx. 0.6 mph (1 km/h).

Press and hold the lever in position 1: The vehicle accelerates without pressure on the accelerator pedal. When you release the lever, the system maintains the current speed.

The vehicle may accelerate beyond the preselected speed on steep downhill stretches, where engine braking alone may not be enough to slow the vehicle. It can also slow when the engine fails to maintain the preselected speed when ascending steep grades.◀

To decelerate

Press the lever briefly in direction 2: With the cruise control active, the speed decreases by approx. 0.6 mph (1 km/h) every time you briefly touch the lever.

Press and hold the lever in position 2: With the cruise control active, the system automatically reduces the throttle opening to slow the vehicle. When you release the lever, the system registers and maintains the current speed.

To cancel the cruise control

Press the lever briefly in direction 3: The cruise control is immediately canceled.

In addition, the system automatically deactivates in response to the following conditions:

- ▷ braking
- ▷ clutch disengagement
- ▷ when vehicle speed deviates from the preset speed for an extended period, for instance, as a result of pressure on the accelerator pedal.

To deactivate the system

Turn ignition key to position 0.

CarManuals2.com

Odometer

1 Odometer

With the ignition key in position 0, you can activate the displays shown in the illustration by pressing the button in the instrument cluster (arrow).

2 Trip odometer

To reset the trip odometer to zero, press the button (arrow) with the ignition key in position 1 and up.

Tachometer

CarManuals2.com

Never allow engine speed to climb until the needle enters the tachometer's red sector.

To protect the engine, the engine-management system automatically interrupts the fuel supply in this range, producing the sensation of a sudden loss of power.

Fuel gauge

When you switch on the ignition, the indicator lamp lights up briefly to confirm that the system is operational.

Once the indicator lamp comes on and stays on, there are approx. 2.5 gallons (10 liters) of fuel left in the fuel tank.

For fuel tank capacity, refer to page 161.

Certain operating conditions (such as those encountered in mountainous areas) may cause the needle to fluctuate slightly.

⚠ Please refuel early, since driving to the last drop of fuel can result in damage to the engine or catalytic converter.◀

Blue

The engine is still cold. Drive at moderate engine and vehicle speeds.

Red

When you switch on the ignition, the warning lamp comes on briefly to confirm that the system is operational.

If the lamp comes on in the course of normal vehicle operation, the engine has overheated. Turn it off immediately and let it cool down.

Between the blue and red zones

Normal operating range. It is not unusual for the needle to rise as far as the edge of the red zone in response to high outside temperatures or severe operating conditions.

For checking coolant level, refer to page 113.

CarManuals2.com

Remaining distance before service

The displays shown in the illustration appear for a few seconds when the ignition key is in position 1 or after the engine is started.

The remaining distance in miles and the next scheduled service will appear together with the display OILSERVICE or INSPECTION.
The computer bases its calculations for the remaining distance on the previous driving style.

A flashing display and a "–" in front of the number indicate that service is past due by the number of miles displayed. Please contact your BMW center for an appointment.

Clock

To set the clock

From ignition key position 0 on:

To set ahead: turn the button to the right.

To set back: turn the button to the left.

Hold the button turned continuously to move the hands faster.

Multi-Information Radio (MIR)

The Multi-Information Radio allows you to operate the navigation system and various cellular phone functions as well as your in-car sound system.

Please refer to the supplementary Owner's Manual provided with your sound system for detailed information on adjusting and operating the Multi-Information Radio.

Outside temperature

You can have the outside temperature shown on the Multi-Information Radio display. Refer to the supplementary Owner's Manual.

CarManuals2.com

The concept

DSC maintains vehicle stability even in critical driving situations.

DSC maintains optimal, predictable response while maximizing traction when you accelerate from a standing start or speed up while already underway. The system recognizes any tendency for the vehicle to assume an instable attitude such as oversteer and understeer, and counteracts this tendency with a combination of graduated reductions in engine torque and braking intervention at individually selected wheels. DSC provides optimal stability – within the limits defined by the laws of physics.

The system automatically assumes operational status each time the engine is started.

Indicator lamp

The indicator lamp in the instrument cluster goes out shortly after you switch on the ignition. Refer to page 22.

The indicator lamp flashes:
The system is actively regulating drive torque and braking force.

The indicator lamp does not go out after the engine is started, or it comes on during normal driving and stays on: There is a system malfunction or the system was deactivated with the button. You can continue to drive the vehicle normally, but without DSC. Please respond to any suspected defects by referring the problem to your BMW center.

To deactivate the system

Press the button, the indicator lamp comes on and stays on.

When DSC is deactivated, you are operating the vehicle in the conventional drive mode.

In the following rare circumstances, it may be effective to deactivate the DSC for a short period of time:

▷ When rocking the vehicle or starting off in deep snow or on loose surfaces.

To maintain vehicle stability, always drive with the system switched on when possible.◀

CarManuals2.com

To reactivate the system

Press the button again; the indicator lamp goes out.

Not even DSC can suspend the laws of physics. Responsibility for careless driving remains in the hands (and feet) of the driver. Never use the added safety provided by DSC as an excuse for taking unnecessary risks. Do not make any modifications to the DSC system. Service procedures on the system are to be performed by authorized technicians only.◀

For additional information concerning DSC, please refer to the chapter "Advanced technology" on page 151.

CarManuals2.com

Dynamic Performance

The system reacts to current conditions with an instantaneous recalibration. It revises the accelerator's standard response designed to furnish an ideal combination of comfort and performance orientation – with a more performance-oriented response program. The result is crisper, faster reaction to throttle inputs (Sport mode).

The system resets to the standard response mode, with its combination of comfort and performance orientation, each time the engine is restarted.

Sport mode recognition

Activating:
In ignition position 2, press the button. The indicator lamp will come on.

Deactivating:
Whenever the indicator lamp is on, it will go out if you press the button again.

CarManuals2.com

The concept

The Flat Tire Monitor keeps track of the inflation pressures in all four wheels as you drive. The system provides an alert whenever the inflation pressure has dropped significantly in one of the tires.

To initialize the Flat Tire Monitor with the correct inflation pressures, start by ensuring that all of the vehicle's tires are inflated to the pressures specified in the inflation pressure table on page 27. Now you can activate the system.

The indicator lamp within the instrument cluster flashes to alert you to substantial pressure loss in any of the tires.

To activate the system

1. Turn the ignition key to position 2
2. Press the button long enough for the indicator lamp in the instrument cluster to light up red for a few seconds
3. As you drive, the Flat Tire Monitor automatically enters the system initialization mode in which it stores the current pressures as its reference figures. The initialization process lasts for ten minutes or somewhat longer. Once it has been completed the Flat Tire Monitor is able to detect and warn of flat tires.

Repeat this process after any changes in tire inflation pressure, tire rotation or replacement.
Do not reactivate the system after periodic corrections of inflation pressures to maintain them at the levels stored during an earlier initialization process.

In the event of a flat tire

The red indicator lamp will flash in the event of a flat tire.
A supplementary gong is also heard.

Carefully reduce speed to less than 50 mph (80 km/h), avoiding any hard braking or steering maneuvers while doing so.

For additional details, refer to page 137.

The Flat Tire Monitor cannot alert you to severe and sudden tire damage caused by external factors. Another factor which the Flat Tire Monitor does not recognize is the balanced and very gradual pressure loss that takes place in all tires over an extended period of time.◀

Check tire pressure on a regular basis and correct it as required. Refer to page 26.
Do not activate the system when driving on snow chains or when operating the vehicle on a closed racing circuit. False alarms and undetected pressure loss are both possible under these conditions.
In certain circumstances, there could be a delayed detection of any loss in inflation pressure while driving on snow-covered or slippery road surfaces.
Performance-oriented driving (slip at the drive wheels, high levels of lateral acceleration) can also delay the appearance of status reports in the Flat Tire Monitor's display panel.◀

CarManuals2.com

System interference

The red indicator lamp in the instrument cluster will stay on for as long as there is a malfunction.

The indicator lamp will come on if the system malfunctions.

Please contact your BMW center for additional information.

Parking lamps (side marker lamps)

With the switch in this position, the front, rear and side vehicle lighting is switched on.
When leaving the vehicle parked, you also have the additional option of activating the lighting on just one side, refer to page 70.

Low beams

If you switch off the ignition while the low beams are on, only the parking lamps (side marker lamps) remain on.

"Follow me home" lamps:
If you actuate the headlamp flasher after you have parked the vehicle and shut off the engine, the low beams will remain on for a brief period. You may also have this function deactivated if you wish.◀

"LIGHTS ON" warning

If you turn the ignition key to position 0, an acoustic signal will sound for a few seconds after the driver's door has been opened if the low beams have not been switched off.

Daytime driving lamps*

The headlamps are automatically switched on for daylight driving when ignition key is in position 2.

CarManuals2.com

Turn the knob to adjust the lighting intensity.

High beams/Standing lamps

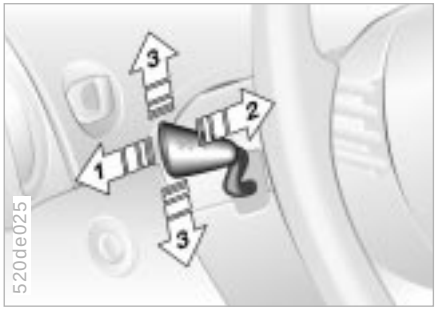

1 High beams (blue indicator lamp)

2 Headlamp flasher (blue indicator lamp)

3 Standing lamps

CarManuals2.com

Standing lamps, left or right

When leaving the vehicle parked, you also have the additional option of activating the lighting on just one side:

With the ignition key in position 0, move the turn signal lever in the desired direction (for left or right side); allow the detent to engage.

Rear fog lamp

The yellow indicator lamp in the instrument cluster lights up whenever the rear fog lamp is switched on.

Comply with legal requirements regarding fog lamp use.

Interior lamps

The interior lamps operate automatically.

Switching the interior lamps on and off manually

Turn the knob.

If you want the interior lamps to remain off, keep the knob turned for approx. 3 seconds.

Turn the knob again to turn it back on.

Footwell lamps

The footwell lamps operate in the same way as the interior lamps.

Reading lamps

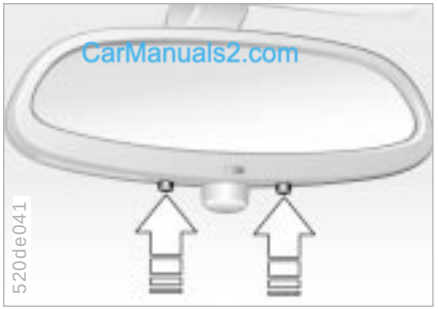

The reading lamps can be switched on and off using the push button, located next to each lamp.

▷ In order to prevent battery discharge, all of the lamps in the vehicle are switched off automatically approx. 15 minutes after the ignition key has been turned to position 0.◀

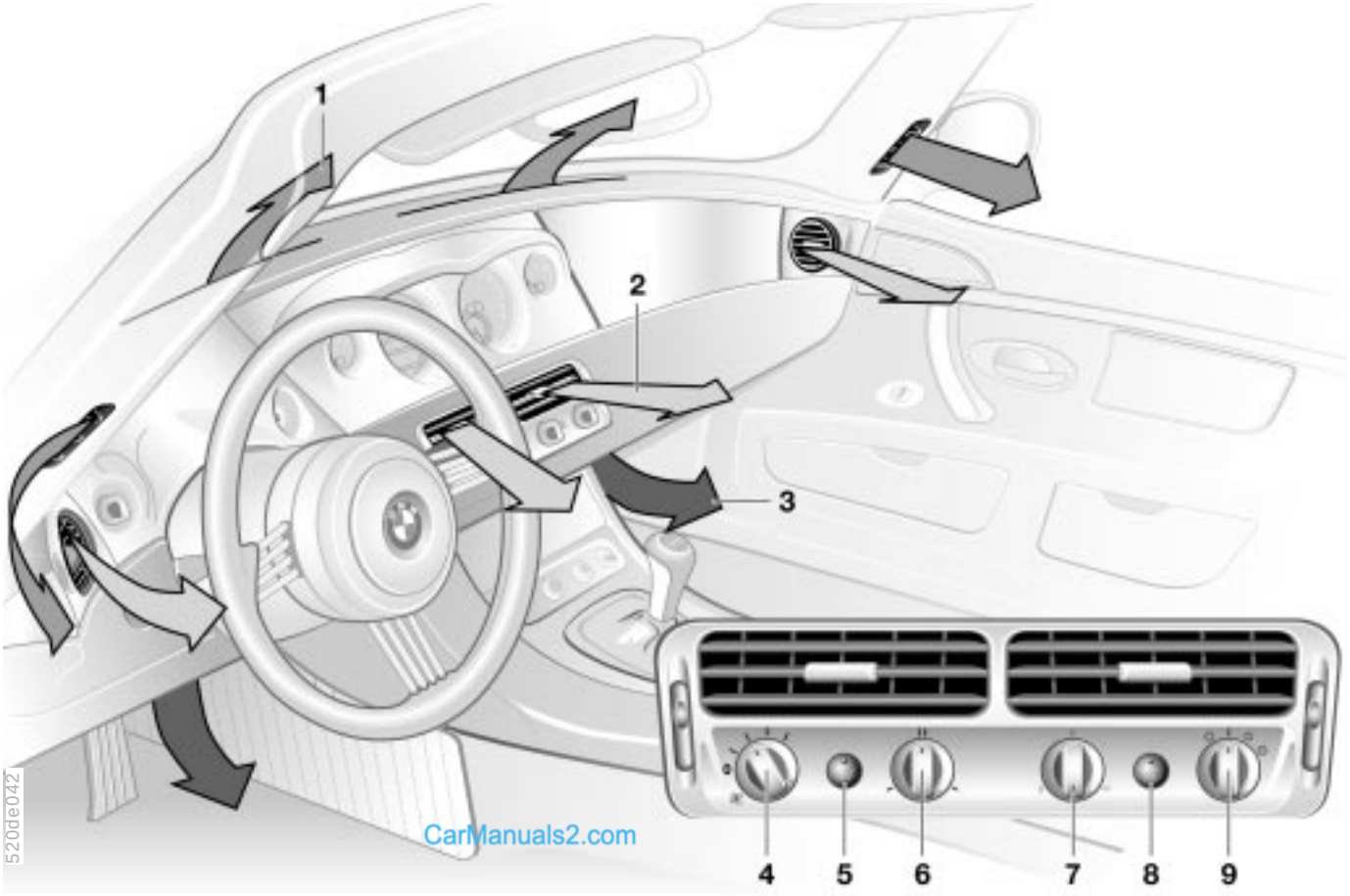

Online Edition for Part No. 01 41 0 156 337 - © 09/01 BMW AG

1 Air onto the windshield and the side windows

2 Airflow for the upper body
The rotary dials make it possible for you to open and close the air supply through an infintely-variable range, while the levers change the airflow direction. Refer to page 75

3 Front footwell ventilation

4 Air supply
Both the heating and ventilation are available from position 1 on. Refer to page 74

5 Defrost windows and remove condensation 75

6 Temperature 74

7 Air distribution toward
▷ the windows ⇧
▷ the upper body ⇨
▷ the footwell ⇩
A infinitely-variable range of intermediate settings is also available. Refer to page 74

8 Rear window defroster with the hardtop in place 75

9 Operating:
▷ Recirculated air 74
▷ Incoming air 74
▷ Air conditioner/Incoming air 74
▷ Air conditioner/Recirculated air 74

CarManuals2.com

Air supply

You can select blower speeds from 1 to 4. The higher the setting, the greater the amount of heat and air supply. In position 0, the blower, heating and air conditioner are switched off.

Temperature

In order to increase the interior temperature, turn to the right. For rapid heating, turn completely to the right. Then select an interior temperature that is comfortable for you.

Air distribution

You can direct the airflow onto the windows ⇧, toward the upper body ⇨ and into the footwell ⇩. You can also make all intermediate settings. The "6 o'clock" setting is recommended for normal conditions (refer also to the illustration and overview on page 72).

Recirculated-air mode

If there are unpleasant odors in the incoming air, you can temporarily block the air supply. The system then recirculates the air already within the vehicle.

⚠ If condensation starts to form on window surfaces during operation in the recirculated-air mode, switch this mode off and increase the air supply as required, or press the button for "Defrosting windows and removing condensation".◀

Incoming-air mode

Recommended when driving with the convertible top down. The degree to which the passenger compartment is heated depends on temperature selection and air distribution.

Air conditioner/Incoming-air mode

The air is cooled and dehumidified and – depending on the temperature setting – warmed again when the air conditioner is switched on.
Depending on the weather, the windshield may fog over briefly when the engine is started.

Use the button to switch the air conditioner off at outside temperatures below approx. 41 °F (5 °C). This will help to prevent condensation from forming on window surfaces.
If the windows fog over after switching the air conditioner off, switch it back on.

Air conditioner/Recirculated-air mode

You may find it useful to activate both systems to cool the vehicle more rapidly after it has been parked with the top up on a hot day. This setting provides the coldest possible airflow from the vent outlets (with temperature selection switch turned all the way to the left).

CarManuals2.com

If condensation starts to form on window surfaces during operation in the recirculated-air mode, switch this mode off and increase the air supply as required, or press the button for "Defrosting windows and removing condensation".◀

Defrost windows and remove condensation

This operation quickly removes ice and condensation from the windshield and the side windows.

Rear window defroster

Whenever the hardtop is on, the indicator lamp lights up when the rear window defroster is turned on. The rear window defroster switches off automatically. Refer to page 60.

The indicator lamp is always active, however the rear window defroster will not work if the hardtop is not in place.◀

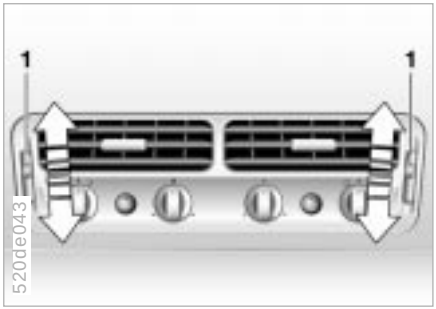

Draft-free ventilation

You can adjust the air outlets for the upper body area for optimal personal comfort:

Use rotary dials 1 to open and close the air outlets through an infinitely-variable range.

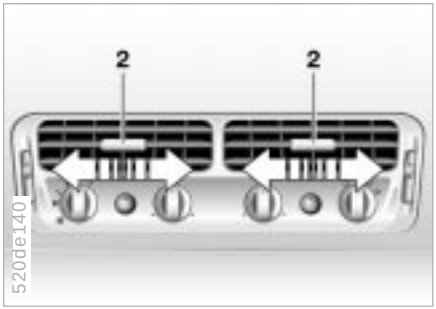

You can adjust the direction of the airflow using the levers 2.

Set the air outlets so that the air flows past you and is not directed straight at you.

Microfilter

The microfilter removes dust and pollen from the incoming air. Your BMW center will change this filter during routine maintenance. A substantial reduction in airflow indicates that the filter needs to be replaced early.

CarManuals2.com

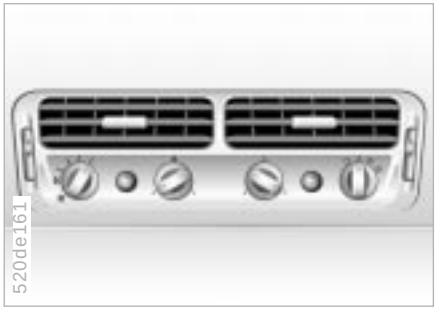

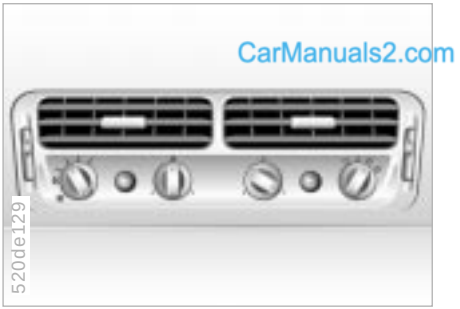

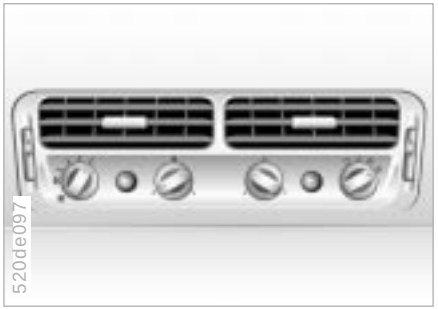

Rapid ventilation

1. Set the rotary control for the air supply to position 4
2. Turn the rotary temperature control completely to the left
3. Rotary control for air distribution in position ⇨
4. Select incoming air
5. Open the air outlets for the upper body area.

Cooling

1. Set the rotary control for the air supply to position 2
2. Use the rotary temperature control to select an interior temperature comfortable for you
3. Rotary control for air distribution in position ⇨
4. Select the "air conditioner/incoming air" mode
5. Open the air outlets for the upper body area.

Rapid cooling

1. Set the rotary control for the air supply to position 4
2. Turn the rotary temperature control completely to the left
3. Rotary control for air distribution in position ⇨
4. Select the "air conditioner/recircu-lated air" mode
5 Open the air outlets for the upper body area.

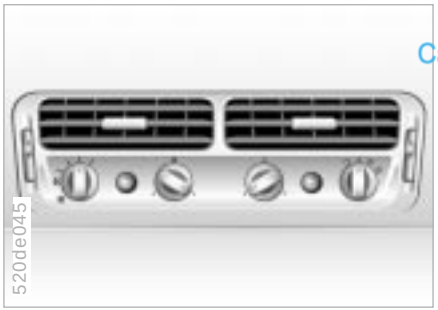

CarManuals2.com

Rapid heating

1. Set the rotary control for the air supply to positon 3
2. Turn the rotary temperature control completely to the right
3. Rotary control for air distribution in position ⇩
4. Select incoming-air mode.

Heating

When the windows are free of ice and condensation, we recommend the following settings:

1. Set the rotary control for the air supply to position 2
2. Use the rotary temperature control to select an interior temperature which is comfortable for you
3. Rotary control for air distribution in position ⇩.

The seat cushion and backrest can be heated when the ignition key is in position 2.

By repeatedly pressing the button, you can select one of three different operation modes:

▷ Two indicator lamps on: heating at high temperature
▷ One indicator lamp on: heating at low temperature
▷ Indicator lamps off: seat heating deactivated.

Glove compartment

To open

Pull the handle. The lamp comes on.

A beverage holder is stored in the glove compartment.
For further information, refer to page 80.

To close

Flip the door up.

To prevent injury in the event of an accident, reclose the glove compartment immediately after use.◀

To lock

Use one of the master keys. The glove compartment, the cellular phone holder and the luggage compartment lid are now locked.
A master key is also required for unlocking.

If you turn over only your door and ignition key for valet parking (refer to page 30), for example, access to the glove compartment, the cellular phone holder and the luggage compartment is not possible when the vehicle has been locked.◀

CarManuals2.com

Manual operation

(in the event of electrical malfunction)

You can turn the key all the way to the lock's end positions to engage and release the glove compartment lock.
For information on the cellular phone holder and the luggage compartment lid, please refer to page 142.

Storage compartments

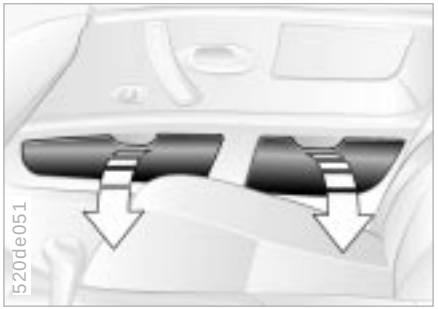

In the doors

To open:

Pull the grab recesses.

To close:

Press cover back into place.

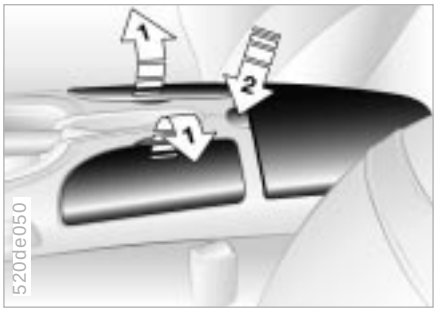

In the center console

To open:

Flip the cover up (arrows 1) – access to the ashtray and cigarette lighter.
When the glove compartment has been unlocked, press the button (arrow 2) – cellular phone holder.

To close:

Flip the cover back into place.

Manual operation

(in the event of electrical malfunction)

For operating the cellular phone holder, refer to page 142.

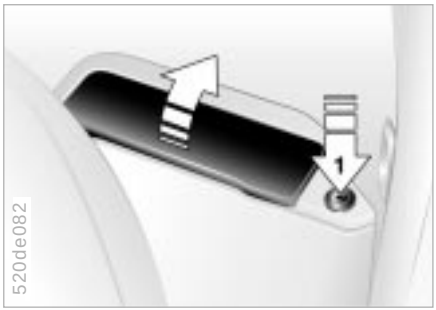

Behind the seats

By way of example, the illustration shows the storage compartment behind the driver's seat.

To open:

Unlock by turning the master key all the way to the left.
The cover will open slightly and can then be flipped all the way up.

To close:

Press down until you hear it snap into place. The cover has been locked again.

If you turn over only your door and ignition key for valet parking (refer to page 30) access is impossible.◀

CarManuals2.com

Rechargeable flashlight

Located in the storage compartment behind the driver's seat.
Because of overload-protection, the flashlight can remain in its holder.

Be sure that the flashlight is switched off when it is inserted into its holder. Failure to do so could lead to deep discharge and damage.◀

Navigation computer

Located in the storage compartment behind the passenger's seat.

For further information regarding the navigation system, refer to the separate Owner's Manual.

CD changer

Located in the storage compartment behind the driver's seat.

For further information regarding the CD changer, refer to the separate Owner's Manual.

Beverage holder

1. Push the front passenger seat all the way back
2. Take the beverage holder out of the glove compartment and
3. place it in the bracket located on the center console on the front passenger side. Refer to the illustration.

By using the removable plastic insert, you can place beverage cans or cups of various sizes in the holder.

⚠ Do not place any open drinks in the holder while driving, otherwise the liquid could slop over the side and either stain the upholstery or cause burns.◀

Cellular phone

Located in the storage compartment in the center console.

To remove

1. Press the button and remove the plug.
2. Slide the button to the left and remove the telephone.

Press the phone into the storage compartment to return. The button locks the phone back in place.

For further information on the cellular phone, refer to the separate Owner's Manual.

Hands-free system

Located over the interior rearview mirror.

For further information on the cellular phone, refer to the separate Owner's Manual.

Ashtray

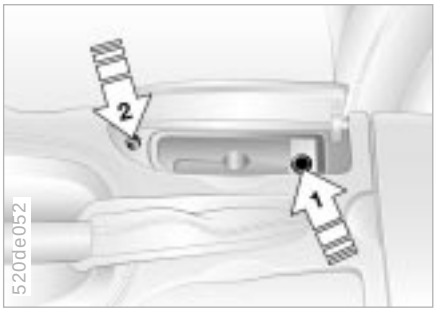

To open

Lift cover.

To extinguish a cigarette, brush off the ash and gently press the tip into the funnel (arrow 1).

To empty

Press button (arrow 2): the ashtray rises and can now be extracted.

CarManuals2.com

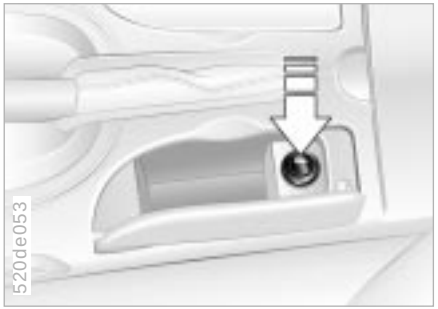

Press in. You can remove the lighter from its socket for use as soon as it snaps back out.

Hold or touch the hot cigarette lighter by the knob only. Holding or touching it in other areas could result in burns.
The cigarette lighter remains operational when the ignition key has been removed. This is yet another reason you should never allow unsupervised children to remain alone in the vehicle.◀

Cigarette lighter socket

The socket is suitable for attaching power supplies for flashlights, car vacuum cleaners, or other appliances up to a rating of approx. 200 watts at 12 volts. Avoid damaging the socket by inserting plugs of improper shapes or sizes.

CarManuals2.com

Stowing cargo

If you are carrying cargo in the luggage compartment of your BMW Z8 roadster:

▷ Load heavy cargo as far forward as possible, directly behind the luggage compartment partition
▷ Cover sharp edges and corners.

If you are stowing cargo behind the seats in your BMW Z8 roadster:

▷ Stow only lightweight objects, such as clothing
▷ Do not pile objects higher than the top edge of the backrest.

⚠ Do not stow either heavy cargo or cargo with sharp edges and corners behind the seats, or else they could damage the back of the seat or the rear trim panel.
Cargo that is too big or unwieldy and stowed behind the seats can also prevent the seat from locking properly into position. Therefore, check to make sure that the seat is properly locked into place, moving the seat forward if necessary. Refer to page 45.

Always position and secure the load correctly. If you do not, it can endanger vehicle occupants during braking or evasive maneuvers.
Do not exceed the approved gross weight or the approved axle loads (refer to page 160), otherwise the vehicle's operating safety is no longer assured and you are in violation of the law.
Make sure to secure heavy or hard objects you stow in the passenger area, otherwise, these objects could be flung about during braking or evasive maneuvers and possibly injure vehicle occupants.◀

CarManuals2.com

CarManuals2.com

Special operating instructions:
Break-in procedures 86
Driving notes 87
Catalytic converter 87
Antilock Brake System (ABS) 88
Dynamic Brake Control (DBC) 90
Disc brakes 90
Brake system 92
Winter operation 92
Power steering 94
Cellular phone 94
Car radio reception 95
Wind deflector 95
Hardtop 96

Wheels and tires:
Tire inflation pressure 99
Tire condition 99
Tire replacement 100
Tire rotation 101
Wheel and tire combinations 102
Special features of winter tires 103
Snow chains 103
Approved wheel and tire specifications 104

Under the hood:
Hood 105
Engine compartment 108
Washer fluids 110
Washer nozzles 110
Engine oil 111
Coolant 113
Brake fluid 114
Vehicle Identification Number 115

Maintenance and care:
The BMW Maintenance System 116
Caring for your vehicle 117
Airbags 123
Vehicle storage 124

Laws and regulations:
Technical modifications 125
California Proposition 65 Warning 125
OBD interface socket 126

CarManuals2.com

Break-in procedures

To ensure that your vehicle provides maximum economy throughout an extended service life, we request that you comply with the following information.

Your BMW Z8 is an especially high-quality vehicle. To protect your own investment, we recommend that you follow he break-in instructions carefully. By doing so, you will create the basis for optimal service life of the vehicle.◀

Engine and differential

Up to 1,200 miles (2,000 km):
Drive at varying engine and road speeds, but do not exceed 4,500 rpm or a road speed of 106 mph (170 km/h).

Comply with local and state maximum speed limits.

Avoid depressing the accelerator to the full-throttle position.

Following the Break-In Inspection at 1,200 miles (2,000 km), you can gradually increase engine or road speeds.

You should also comply with these break-in procedures if the engine or differential is replaced later in the course of the vehicle's service life.

Tires

Owing to technical factors associated with their manufacture, tires do not achieve their full traction potential until an initial break-in period has elapsed. Thus drive with extra care during the initial 200 miles (300 km).

Comply with local and state maximum speed limits.

When the vehicle is being driven on wet or slushy roads, a wedge of water may form between the tire and the road surface. This phenomenon is referred to as "aquaplaning" and can lead to partial or complete loss of traction, vehicle control and braking effectiveness. Reduce your speed on wet roads.◀

CarManuals2.com

Brake system

Approximately 300 miles (500 km) must elapse before the brake pads and rotors achieve the optimal pad-surface and wear patterns required for trouble-free operation and long service life.

To break in the separate parking brake drums, apply the parking brake lightly when coasting to a standstill (at a traffic signal, for instance), provided that traffic conditions allow you to do so.
To avoid corrosion, repeat this procedure from time to time.

The brake lamps do not come on when the parking brake is engaged.
Vacuum for the brake system servo unit on your BMW is available only when the engine is running. When you move the vehicle with the engine shut off – when towing, for instance – substantially higher levels of pedal force will be required to brake the vehicle.◀

Clutch

The clutch will also begin to function optimally after about 300 miles (500 km). Engage the gears carefully and without high engine speeds during this break-in period.

Brakes:
Do not rest your foot on the brake pedal while driving. Even light but consistent pressure on the brake pedal could lead to high temperatures, brake wear, and possibly, to brake system failure.

Aquaplaning:
Reduce speed while driving on wet or slushy roads, otherwise, a wedge of water can form between the tires and the road surface. This phenomenon is referred to as "aquaplaning" or "hydroplaning." It is characterized by a partial or complete loss of contact between the tires and the road surface. The ultimate results are loss of steering and braking control.

Driving through water:
When there is water on the roads, do not drive in it if it is deeper than 1 ft (30 cm), and even then, only at walking speed, otherwise the vehicle can sustain damage to the engine, the electrical systems and the transmission.◀

Catalytic converter

CarManuals2.com

The catalytic converter reduces harmful exhaust emissions.

It is designed for use with unleaded fuel only. Even minute quantities of lead would be enough to permanently damage both the catalytic converter and the system's oxygen sensor.

To ensure efficient, trouble-free engine operation and to avoid potential damage:

- ▷ Be sure to comply with the scheduled maintenance requirements
- ▷ Fill the fuel tank well before it is empty
- ▷ Tow-start only when the engine is cold. If you attempt to tow-start with a warm engine, unburned residual fuel could ignite on the way to the catalytic converter and cause damage. It is better to start the vehicle with a battery charger or assistance from another vehicle
- ▷ Avoid other situations where the fuel is either not burned or burns incompletely, such as engaging the starter frequently or for extended periods, or repeated start attempts in which the engine does not start (stopping and restarting an engine which is running properly does not present a problem). Never allow the engine to run with any of the spark plug cables disconnected.

Be sure to comply with the instructions above to prevent unburned fuel from reaching the catalytic converter. Otherwise, there is the danger of overheating and damage to the catalytic converter.

Extreme temperatures are present with the catalytic converter both on this and every catalyst-equipped vehicle. Heat shields are installed adjacent to some sections of the exhaust system. Never remove these shields; do not apply undercoating to their surfaces. When driving, standing at idle, and parking the vehicle, take care to avoid contact between the exhaust system and flammable materials (grass, hay, leaves etc.). Such contact could start a fire, resulting in serious personal injury and property damage.◀

Antilock Brake System (ABS)

The concept

ABS enhances active safety by helping to prevent the wheels from locking under braking. Why is this important? When front wheels lock up and cease to turn, the tires break into a slide. Result: the driver loses the ability to steer the vehicle. Traction loss at the rear wheels can cause the back end of the vehicle to slip sideways and break away in uncontrolled oversteer.

With ABS, you will achieve the shortest-possible braking distances under all given conditions (braking while driving straight ahead or in curves, different road surfaces).

ABS is designed to meet two essential requirements during every brake application:

▷ To help provide vehicle stability
▷ To help retain steering and maneuvering capability on all types of road surfaces (asphalt, concrete, dirt, wet surfaces, snow and ice).

Braking with ABS

The system is operative once the vehicle exceeds a speed of approx. 6 mph (10 km/h). The ABS is deactivated whenver the vehicle's speed drops back below approx. 4 mph (6 km/h). This means that the wheels can lock only in the final phase of a panic stop – a factor of no substantive significance in actual use.

The ABS system works best in situations requiring maximum pressure on the pedal (full braking). Since the vehicle maintains steering responsiveness, you can nevertheless avoid possible obstacles with a minimum of steering effort.

CarManuals2.com

The ABS system's closed-loop control circuit cycles in fractions of a second. A pulsing of the brake pedal, combined with the sounds associated with the hydraulic controls, tells you that the brake system is within its maximum limit range and reminds you that you should adapt your vehicle's speed to road conditions.

On road surfaces that have a loose surface layer on a firm base with good traction (on gravel, deep sand or snow, for example), braking distances may be longer than with locked wheels. This also applies to driving with snow chains. However, ABS continues to provide enhanced vehicle stability and steering response under these conditions.

Information for your safety

Not even ABS can suspend the laws of physics. The consequences of brake applications with inadequate clearances for safety between vehicles, excessive speed or if aquaplaning occurs are always the responsibility of the driver. You should never allow the added safety provided by ABS to mislead you into taking risks of any kind.

Do not make any modifications to the ABS system.
Service procedures on ABS are to be performed by authorized technicians only.◀

In case of a system malfunction

If the ABS warning lamp comes on, refer to page 21. The brake system will then function the same as on vehicles without ABS. However, have the brake system checked by your BMW center as soon as possible. To prevent undetected defects and cumulative faults from adversely affecting the brake system, refer any problems to your BMW center at the earliest opportunity.

Cornering Brake Control (CBC)

CBC is an advanced ABS engineering design. Vehicle stability is also enhanced when braking during cornering at high rates of lateral acceleration and during lane changes.

CarManuals2.com

Dynamic Brake Control (DBC)

If you step on the brake rapidly, this system automatically produces maximum braking force boost and thus helps to achieve the shortest-possible braking distance during "panic stops." All of the benfits of the ABS system are exploited under these circumstances.

Do not reduce the pressure on the brake pedal during the brake application. When the brake pedal is released, the DBC is deactivated.

In the event of a malfunction, the yellow brake warning lamp comes on. Normal braking efficiency and ABS are still fully available. Have the system checked and repaired at your BMW center as soon as possible.

For your safety

Not even DBC can suspend the laws of physics. The consequences of brake applications with inadequate clearances for safety between vehicles, excessive speed or if aquaplaning occurs are always the responsibility of the driver. You should never allow the added safety provided by DBC to mislead you into taking risks of any kind.

CarManuals2.com

Disc brakes

Disc brakes furnish optimal deceleration and braking control and greater fade resistance under heavy use.

When the vehicle is driven only occasionally, during extended periods when the vehicle is not used at all, or in operating conditions where brake applications are less frequent, there is an increased tendency for corrosion of the rotors and accumulation of contamination on the brake pads. This occurs because the minimal pressure which must be exerted by the pads to clean the disc brakes by brake applications is not achieved.

If the brake rotors are corroded, they will tend to respond to braking with a pulsating effect that even extended brake applications will fail to cure.

For your own safety: use only brake pads BMW has approved for your specific vehicle model. BMW cannot evaluate non-approved brake pads to determine if they are suited for use, and therefore cannot ensure the operating safety of the vehicle if they are installed.◀

Driving notes

When driving in heavy rain and on wet roads it is advisable to apply light pressure to the brake pedal every few miles. Monitor traffic conditions to ensure that this maneuver does not pose a hazard to you or to other road users. The heat generated in this braking process helps dry the pads and rotors

Maximum braking force is obtained while the wheels are not locked, but rather when they are still barely turning immediately prior to locking. ABS maintains this state automatically. If the ABS fails, you should revert to the staggered braking technique (refer to page 93).

When descending steep hills and extended grades, downshift to a gear that will allow you to continue safely with only a minimal amount of braking. By minimizing the loads placed on the brake system, this strategy helps ensure that optimal brake system response will remain available at all times.

You can enhance the engine's braking effect by downshifting, into first gear, if necessary.

Even if engine braking fails to slow the vehicle sufficiently, you should still make every effort to avoid prolonged braking with continuous application of low to moderate pressure at the pedal. It is better to decelerate the vehicle by applying a higher level of force at the pedal (watch following traffic!) and then subsequently pausing to allow the brakes to cool briefly before starting on your next braking cycle. By protecting brake system components against overheating, the cooling phases afforded by this staggered, or intermittent braking technique help maintain consistent availability of optimal braking response when it is needed.

CarManuals2.com

Do not coast with the clutch pedal depressed, the gear-shift lever in neutral, or, above all, with the engine off; otherwise, the engine will provide no braking effect if the transmission is in neutral, and there is no braking or steering power assist if the engine is not running. Never allow floor mats, carpets or any other objects to obstruct the accelerator, clutch or brake pedals and pose a safety hazard by reducing their available travel range.◀

Brake fluid level

The brake warning lamp comes on with the parking brake released:

The brake fluid level in the reservoir is too low, refer to page 114.

If the brake fluid level is too low and brake pedal travel has become noticeably longer, there may be a defect in one of the brake system's hydraulic circuits.

Proceed to the nearest BMW center. Higher brake application pressure may be necessary under these conditions, and brake pedal travel may be significantly longer. Please remember to adapt your driving style accordingly.◀

Brake pads

The warning lamp for the brake pads comes on:
The brake pads have reached their minimum thickness. Proceed to the nearest BMW center as soon as possible to have the pads replaced.

CarManuals2.com

For your own safety: use only brake pads which BMW has approved for your specific vehicle model. BMW cannot evaluate non-approved brake pads to determine if they are suited for use, and therefore cannot ensure the operating safety of the vehicle if they are installed.◀

Winter operation

Winter is often accompanied by rapid changes in weather, requiring not only a different driving style, but also certain preparations to the vehicle itself to ensure that your progress through the winter months remains safe and trouble-free.

Coolant

Be sure that the coolant mixture contains the year-round ratio of 50:50 water and extended-duty antifreeze with corrosion inhibitor. This mixture provides protection against freezing down to approx. –34 °F (–37 °C).

Locks

BMW door lock deicer can be used to free doors if frozen. This deicer also contains lubricant.
After using the deicer, treatment with BMW lock cylinder grease is recommended.

Rubber seals and components

To prevent the weather-stripping from freezing, apply a spray-on rubber treatment or silicone spray to the door, hood and luggage compartment lid seals.

A full range of car-care products is available from your BMW center.◀

Snow chains

Mount BMW snow chains* only in pairs on rear tires, complying with the manufacturer's safety precautions. Do not exceed a maximum speed of 30 mph (50 km/h) while the snow chains are mounted and refrain from activating the Flat Tire Monitor, as the snow chains could trigger false alarms and/or prevent the system from detecting actual pressure loss.

Starting off

When starting off in deep snow or when "rocking" the vehicle to free it, it may be advisable to temporarily deactivate the DSC. Refer to page 65.

To maintain vehicle stability, always drive with the system switched on whenever possible.◀

Driving on low-traction road surfaces

Do not activate the Sport mode (refer to page 66). Use smooth, gentle pressure to control the accelerator pedal. Avoid excessive engine speeds and upshift early. Downshift well in advance when approaching uphill or downhill grades. Maintain an adequate distance between yourself and the vehicle ahead.

Brakes

Winter road conditions substantially reduce the amount of traction available between the tires and the road surface. The resulting increases in braking distance are considerable and should be kept in mind at all times.

CarManuals2.com

ABS is intended to prevent the wheels from locking during brake applications, thus helping to maintain vehicle stability and steering response.

If the ABS does not respond in a critical braking situation and the wheels lock, reduce the pressure on the brake pedal until the wheels just start to roll again while still maintaining enough force to continue braking.
Then increase the pressure, reduce the pressure when the wheels lock, reapply pressure etc.
This staggered braking procedure will reduce braking distances while helping you maintain steering control.
You can always then attempt to steer around hazards after you have reduced pressure on the brake pedal.

Never downshift to exploit engine braking when driving on slippery road surfaces, as this could lead to a loss of traction at the rear wheels, impairing your ability to control the vehicle.◀

Depress the clutch during hard braking on road surfaces that provide only poor or uneven traction.◀

Skid control

Depress the clutch and release the accelerator pedal. Countersteer carefully and attempt to regain control over the vehicle.

Parking

Engage first or reverse gear. Depending on the steepness of the incline, you can apply the parking brake as well. In order to prevent the parking brake pads from locking due to frost or corrosion, dry them by gently applying the parking brake as the vehicle is coming to a stop. Make sure that following traffic is not endangered.

The brake lamps do not come on when the parking brake is engaged.◀

Power steering

If there is a change in steering response – e.g. difficult or over-responsive steering – at increasing speeds, consult a BMW center to have it checked.

If the power steering fails, increased effort will be required to steer the vehicle.◀

CarManuals2.com

Cellular phone

Mobile communications systems (cellular phone, radio, etc.) are permitted with an output of up to 10 watts only. Mobile communications devices not specifically designed for use in your vehicle may trigger malfunctions while you are operating your vehicle. BMW can neither test nor assume responsibility for every individual product being offered on the market. We recommend that you consult your BMW center before purchasing any device of this kind.

To ensure reliable and trouble-free operation of your BMW, do not use any cellular phones or other radio devices where the antenna is located either inside the passenger compartment or otherwise not attached to the outside of the vehicle.

You will find instructions for operating your cellular phone in the supplementary Owner's Manual.

Car radio reception

The reception and sound quality obtained from mobile radios vary according to a variety of factors, including the broadcast range of the transmitter and the directional orientation of the antenna. Interference factors such as high-tension power lines, structural or natural obstructions can all lead to unavoidable reception interference, regardless of how well the vehicle sound system is operating. Climatic factors such as intense solar radiation, fog, rain and snow can also interfere with reception.

Radio interference can also be caused by either cellular phones not recommended by BMW or by portable phones. This phenomenon assumes the form of a low-pitched hum emanating from the speaker system.

Please refer to the Owner's Manual that you received for detailed information on settings and operation of your radio.

You will find additional details concerning radio reception in the chapter "Advanced technology" on page 150.

Wind deflector

Mounting

Attach the wind deflector while the convertible top is open and its cover is not mounted.

1. Push the brackets for the wind deflector, with the zippers fastened and facing to the front, onto both roll-over protection bars as far as to the upper edge of the chrome collars (arrow)
2. Guide the four fasteners to their respective slots, attach them at an angle, and press them into place using the strap hanging in front of them. Shove the four straps under the inner side of the convertible top
3. Shove both the center elements all the way to the vehicle's outside edge (arrows), so that the cover can then easily be mounted
4. Fit the cover if you wish to drive with the convertible top open (refer to page 42).

CarManuals2.com

Wind deflector

Removal

Pull the four straps to release the retainers, then reverse the installation sequence to remove the wind deflector.

Fold the wind deflector and place it in its protective slipcase prior to storing it in the luggage compartment.

While driving

You can always drive with the wind deflector installed. Whenever the convertible top is closed, flip the center section of the wind deflector down to get a better view to the rear.

CarManuals2.com

1. With the two stud fasteners closed, first unfasten the zippers entirely.
2. Release the two stud fasteners and lay down the center section either to the rear or the front, as shown in the illustration.

When reattaching, first fasten the two stud fasteners, then zip the zippers up.

Hardtop

Removal

Your BMW Z8 roadster is equipped with a hardtop as standard equipment. Two individuals are required for its removal. When removing the top, always proceed with utmost caution to avoid damage to the vehicle's paint and bodywork as well as to the hardtop itself.

1. Set up the hardtop cart as described in the accompanying assembly instructions
2. Lower the side windows.
3. Press to release the side trim (arrow)

▷ Every time you press on it, you either lock or unlock the side trim panel.◀

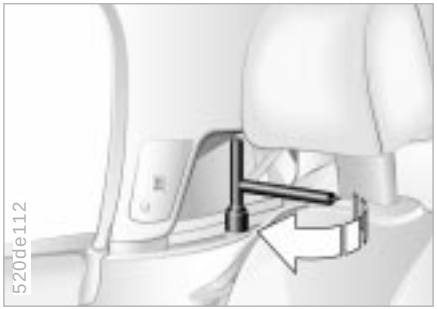

4. Remove both the left and right side trim panels
5. Remove the tool used for locking the hardtop, located next to the hardtop catch on the left side, position the tool and turn it forward until you hear an audible click. Do this both on the left and right side of the hardtop to release both catches
6. Remove the two oval cover panels from the front of the hardtop frame, using a screwdriver, if necessary
7. Position the tool for locking the hardtop, and turn it outward until you hear an audible click. Do this both on the left and right side of the hardtop frame to release both catches
8. The hardtop's detent mechanism is now completely disengaged. With the aid of an assistant, lift the hardtop up and over the rear of the vehicle

CarManuals2.com

Do not set the hardtop down upright, as damage could result.◀

9. Place the hardtop on the hardtop cart as described in the enclosed assembly instructions.

To avoid possible damage, take care not to jam the electrical wires on the left and right sides.◀

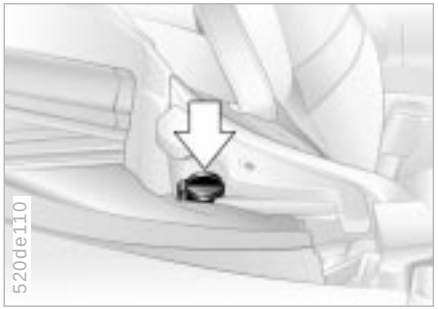

10. Press the left and right protective covers onto the hardtop brackets.

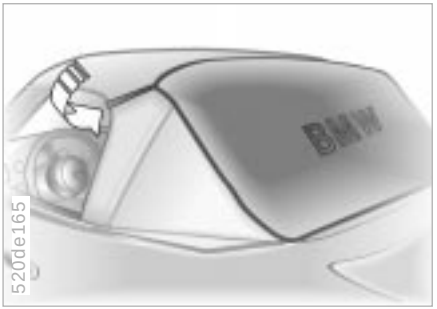

Installing

Goes the same way as for taking the hardtop off, just do it in reverse order.

Attach the protective cloth insert to the roof brace (arrow) before placing the convertible top on the hardtop cart.

Whenever the hardtop is in constant use, the fabric convertible top does not need to be dismantled, even in winter. Before storing the fabric convertible top in the convertible top compartment, it has to be completely dry to keep any water or mildew stains from forming.

Two individuals are required for removal and installation. When removing and installing the top, always proceed with utmost caution to avoid damage to the vehicle's paint and bodywork or to the hardtop itself.

⚠ The hardtop headining fabric must not contact the hardtop cart. Otherwise it jams and can lead to damage.◀

CarManuals2.com

Information for your safety

The vehicle's factory-approved safety tires have been specially designed to provide optimum safety and driving comfort on your vehicle.

It is not merely the tire's service life, but also driving comfort and – above all else – driving safety that depend on the condition of the tires and the maintenance of the specified tire pressure.

Incorrect inflation pressure is a frequent cause of tire damage. It also significantly influences the road-holding ability of your BMW. Check tire inflation pressures regularly (refer to page 26), at least every two weeks and before beginning a longer trip. If this is not done, incorrect tire pressures can cause driving instability and tire damage, ultimately resulting in accidents.◀

Safety tires

Your BMW Z8 is equipped with safety tires.
The assembly consists of self-supporting tires mounted on specially-designed wheel rims. Special reinforcement elements support the sidewalls in the event of pressure loss. Although tire performance is then restricted, the vehicle can still be driven on the deflated tire for a limited distance. Your vehicle is equipped with a Flat Tire Monitor that signals you in case of a flat tire.
For further information, refer to pages 67, 137.

CarManuals2.com

Tire tread – tire damage

Inspect your tires frequently for tread depth, wear, signs of damage and for foreign objects lodged in the tread.

Tread depth should not be allowed to fall below 0.12 in (3 mm), even though the legally specified minimum tread depth is only 0.063 in (1.6 mm). At at tread depth of 0.063 in (1.6 mm), tread depth indicators (arrow) in the tread-groove base will indicate that the legally permissible wear limit has been reached. Below 0.12 in (3 mm) tread depth, there is an increased risk of aquaplaning, even at relatively moderate speeds and with only small amounts of water on the road.

Tire condition

Avoid overloading the vehicle so that the permitted load on the tires is not exceeded. Overloading can lead to overheating and increases the rate at which damage develops inside the tires. You could have a blowout as a result.
Unusual vibrations encountered during normal vehicle operation can indicate a flat tire or some other vehicle defect, as can variations in normal vehicle response, such as a pronounced tendency to pull to the left or right. Should this occur, respond by immediately reducing your speed. Proceed carefully to the nearest BMW center or professional tire center, or have the vehicle towed in to have it and its tires inspected.
Tire damage can endanger the lives of both the vehicle occupants and other road users.◀

Tire replacement

To maintain good handling and vehicle response, use only tires of a single tread configuration from a single manufacturer. BMW tests and approves wheel and tire combinations. Refer to page 104.

DOT Quality Grades

Tread wear
Traction AA A B C
Temperature A B C

All passenger vehicle tires must conform to Federal Safety Requirements in addition to these grades.◀

CarManuals2.com

Tread wear

The tread wear grade is a comparative rating based on the wear rate of the tire when tested under controlled conditions on a specified government test course.
For example, a tire graded 150 would wear one and one-half (1½) times as well on the government course as a tire graded 100. The relative performance of tires depends upon the actual conditions of their use, however, and may depart significantly from the norm due to variations in driving habits, service practices and differences in road characteristics and climate.

Traction

The traction grades, from highest to lowest, are AA, A, B and C.
Those grades represent the tire's ability to stop on wet pavement as measured under controlled conditions on specified government test surfaces of asphalt and concrete. A tire marked C may have poor traction performance.

The traction grade assigned to this tire is based on straight-ahead braking traction tests, and does not include acceleration, cornering, aquaplaning, or peak traction characteristics.◀

Temperature

The temperature grades are A (the highest), B and C, representing the tire's resistance to the generation of heat and its ability to dissipate heat when tested under controlled conditions on a specified indoor laboratory test wheel.
Sustained high temperature can cause the tire material to degenerate and reduce tire life, and excessive temperature can lead to sudden flat tire. The grade C corresponds to a level of performance which all passenger vehicle tires must meet under the Federal Motor Vehicle Safety Standard No. 109. Grades B and A represent higher levels of performance on the laboratory test wheel than the minimum required by law.

The temperature grade for this tire is established for a tire that is properly inflated and not overloaded. Excessive speed, underinflation, or excessive loading, either separately or in combination, can cause heat buildup and possibly a flat tire.◀

Uniform Tire Quality Grading

Quality grades can be found where applicable on the tire sidewall between tread shoulder and maximum section width. For example:

Tread wear 200 Traction AA
Temperature A

Use only safety tires as there is no spare tire available if you get a flat tire.
For further information, refer to page 137.◀

Tire age

The date on which the tire was manufactured is indicated by the code on the sidewall:
DOT ... 3201 indicates that the tire was manufactured in week 32 of 2001.

Although tires may have a theoretical service life of up to 10 years, BMW strongly recommends that you replace all tires after an absolute maximum of 6 years.

Between the axles

If different tire sizes are mounted on the front and rear axles (refer to page 104), then the tires may not be rotated from one axle to the other.◀

The tread wear patterns at the front end differ from those at the rear – the actual patterns will vary according to individual driving conditions. In the interests of safety and maintaining optimal handling characteristics, tire rotation is not recommended.

CarManuals2.com

Wheel and tire combinations

The right choice

Use only wheels and tires approved by BMW for the corresponding vehicle model, as otherwise the tires may make contact with the body as the result of tolerances despite the same nominal size being used, resulting in serious accidents. If non-approved wheels and tires are used, BMW cannot evaluate their suitability, and therefore cannot be held liable for driving safety.◀

For wheel and tire specifications approved by BMW, refer to page 104.

The correct wheel and tire combination affects different systems that otherwise will not function properly, e.g. ABS, DSC and Flat Tire Monitor.
For this reason, use only tires of the same brand and tread pattern on the vehicle and, for example, restore the approved wheel and tire combination following a flat tire as soon as possible.◀

Codes on tires and wheels

The code on tires has the following meaning.

Codes on radial tires:

For example: 245/45 R 18 96 W

- Nominal width in mm — 245
- Aspect ratio in % — 45
- Radial tire code — R
- Rim diameter in inches — 18
- Load rating (not on ZR tires) — 96
- Speed rating (before R on ZR tires) — W

The speed rating indicates the approved maximum speed for the tire.

CarManuals2.com

Summer tires:

S = up to 112 mph (180 km/h)
T = up to 118 mph (190 km/h)
H = up to 130 mph (210 km/h)
V = up to 150 mph (240 km/h)
W = up to 167 mph (270 km/h)
Y = up to 186 mph (300 km/h)
ZR = over 150 mph (240 km/h)

Winter tires:

Q M+S = up to 100 mph (160 km/h)
T M+S = up to 118 mph (190 km/h)
H M+S = up to 130 mph (210 km/h)

Codes on light-alloy wheels:

For example: 8 J x 18 EH2

- Rim width in inches — 8
- Code letter for flange type — J
- Symbol for full-drop center rim — x
- Rim diameter in inches — 18
- Hump on the 2 rim shoulders — EH2

Protect tire valves from dirt by using screw-on valve stem caps. Dirt in the valves frequently leads to slow leaks.

Safety tires carry additional designation codes; these vary according to manufacturer:

Bridgestone	RFT
Dunlop	DSST
Goodyear	EMT
Michelin	ZP

Storage

Always store tires in a cool, dry place, protecting them against light whenever possible. Protect the tires against contact with oil, grease and fuel.

Special features of winter tires

Choosing the right tire

For winter road driving, BMW recommends winter tires (M+S radial belt tires). Although all-season M+S tires provide better winter traction than standard summer tires with H, V, W, Y and ZR speed ratings, they generally fail to provide the same levels of performance as standard snow tires in winter driving.

In the interests of safe tracking and steering response, install radial tires made by the same manufacturer and with the same tread configuration on all four wheels if you elect to mount winter tires.

When selecting winter tires, remember that you should never mount anything other than safety tires, as your vehicle is not equipped with a spare tire.
For further information, refer to page 137.◀

Do not exceed specified maximum speeds

Never exceed the maximum speed for which winter tires are rated. Unprofessional attempts by laymen to service tires can lead to damage and accidents.
Have this work performed by skilled professionals only. Your BMW center will be glad to assist you with both their expertise and the proper equipment for your vehicle.◀

Tire condition, tire pressure

Once the tread depth on winter tires is less than 0.16 in (4 mm), they are no longer suitable for winter road driving, and in the interest of safety should be replaced.

Comply with the specified tire inflation pressures – and be sure to have the wheel and tire assemblies balanced every time you change the tires.

Snow chains*

The use of narrow-link BMW snow chains is permissible in pairs only on the rear wheels with winter tires with tire size 245/45 R 18 96 H. Comply with all manufacturer's safety precautions when mounting the chains. Do not exceed a speed of 30 mph (50 km/h) while driving with mounted snow chains.

Do not activate the Flat Tire Monitor when driving with snow chains mounted. Malfunction warnings and undetected losses in pressure are a possibility when driving with snow chains.
For further information, refer to page 67.◀

CarManuals2.com

Approved wheel and tire specifications

BMW tests certain tire brands for each tire size, classifies them as road-safe and approves them. Your BMW center can provide further information.
carmanuals2.com
Observe any regulations applicable in the country of use, e. g. requiring entry in the vehicle documents.

Tire specifications	Light-alloy wheel
BMW Z8	
Summer tires	
Front: 245/45 R 18 96 W	8Jx18EH2
Rear: 275/40 R 18 99 W	9Jx18EH2
Winter tires	
245/45 R 18 96 H M+S	8Jx18EH2

Snow chains*

It is impossible to install snow chains on 275/40 R 18 99 W summer tires.

Do not activate the Flat Tire Monitor when driving with snow chains mounted. Malfunction warnings and undetected losses in pressure are a possibility when driving with snow chains.
For further information, refer to page 67.◀

The use of rims and wheel bolts that do not meet the specifications of the original factory-installed equipment will affect the safe operation of your vehicle and may cause an accident and personal injury.
Never mix tires of different design, such as steel-belted radials with radial bias-belted or bias-ply tires, etc. Mixing tire types will adversely affect roadholding and can lead to loss of vehicle control.◀

To release

Pull the lever located under the left-hand side of the instrument panel.

Never attempt to carry out service or repair operations on your vehicle if you do not have the required professional skills and technical background. Always switch off the engine and allow it to cool down before working in the engine compartment. Always disconnect the battery before working on any electrical systems or equipment, especially when these are located within the engine compartment. Comply with all applicable instructions and safety precautions. Failure to work in an informed, professional manner when servicing components and materials constitutes a safety hazard for vehicle occupants and other road users. If you are not familiar with official servicing procedures, please have the work performed by your BMW center.◀

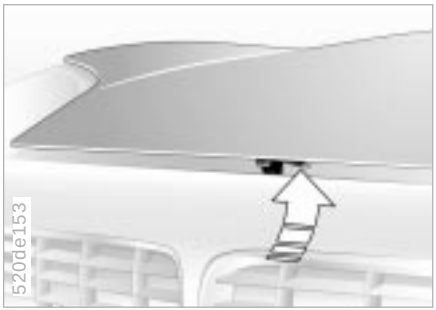

To open

Press the release handle upward and open the hood.

CarManuals2.com

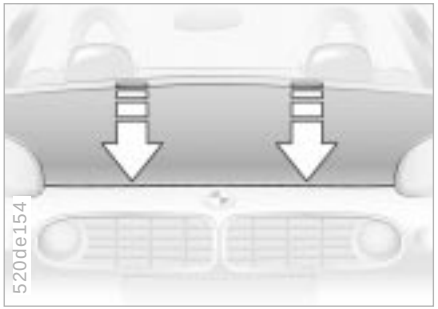

To close

Lower the front of the hood to within several inches of the lock, then allow it to fall of its own weight. Next, press both sides down simultaneously, continuing until you hear the detent mechanism engage.

CarManuals2.com

To avoid injuries, be sure that the travel path of the hood is clear when it is being closed, as with all closing procedures.
If it is determined that the hood is not completely closed while driving, stop immediately and close it securely.◀

CarManuals2.com

Engine compartment

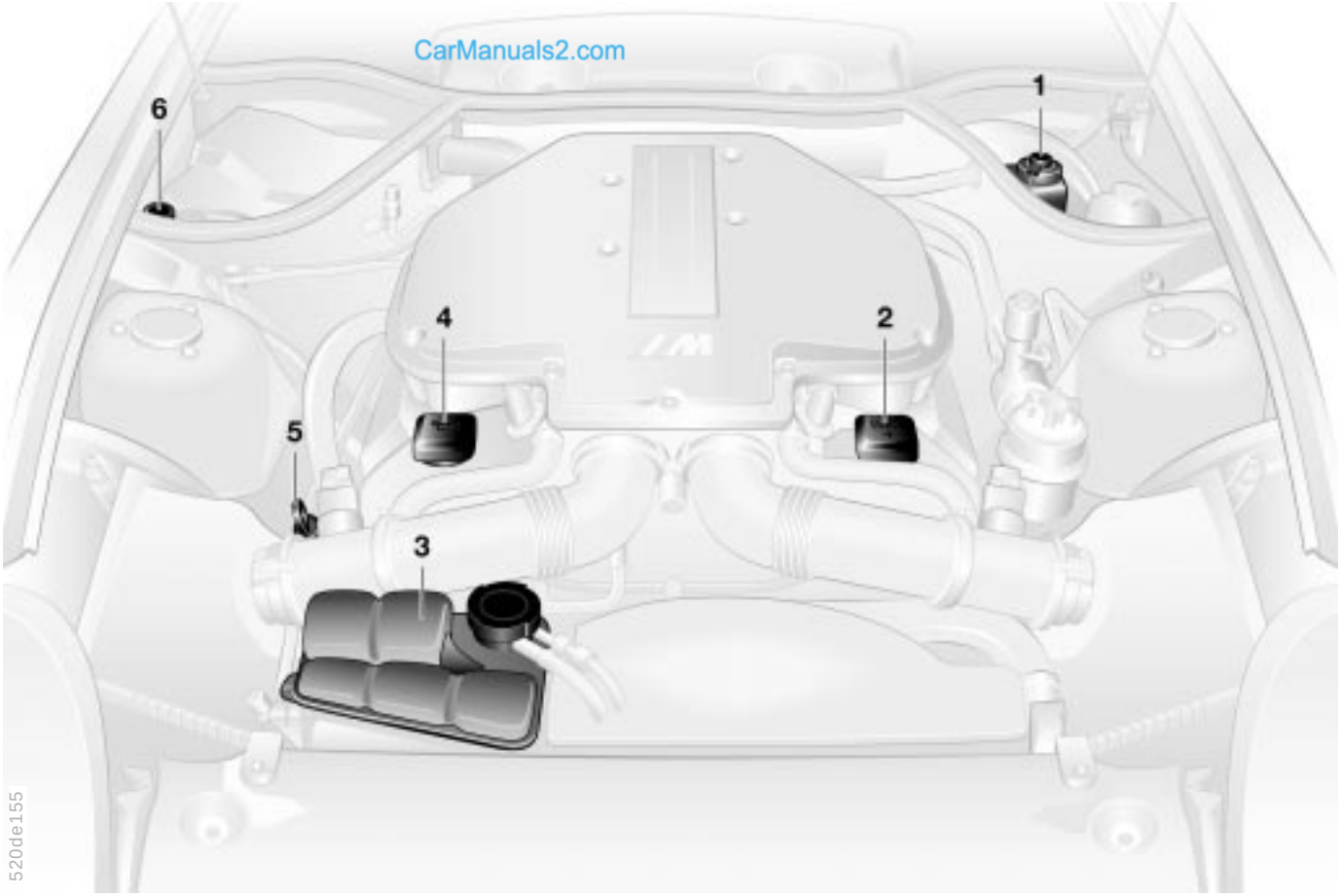

Online Edition for Part No. 01 41 0 156 337 - © 09/01 BMW AG

Engine compartment

1 Brake fluid reservoir 114
2 Auxiliary terminal for jump-starting 145
3 Coolant expansion tank 113
4 Engine oil filler neck 111
5 Engine oil dipstick 111
6 Reservoir for windshield and headlamp washer system 110

CarManuals2.com

Washer fluids

Headlamp and windshield washer system

Capacity in US quarts (liters):
approx. 5.6 (5.3)

Fill with water and – if required – with a washer antifreeze (according to manufacturer's recommendations).

We recommend that you mix the washer fluid before adding it to the reservoir.◀

Antifreeze agents for the washer systems are highly flammable. For this reason, keep it away from sources of flame and store it in its original container. Store it so that it is inaccessible to children. Comply with the instructions on the containers.◀

Washer nozzles

Windshield washer system

The spray from the nozzles should be directed onto the windshield so as to ensure effective cleaning, even at high speeds. Use a needle to adjust the nozzles if required, or have them adjusted by your BMW center.

Headlamp washer system

Have this system adjusted by your BMW center, if required.

CarManuals2.com

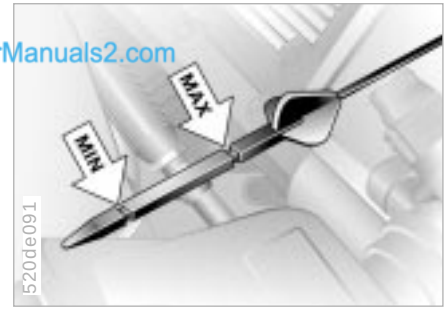

CarManuals2.com

Checking the oil level

1. Park the vehicle on a level surface
2. Let the warmed-up engine idle for about 15 seconds, then turn it off
3. Pull the dipstick out after about 1 minute and wipe it off with a clean lint-free cloth, tissue, or similar material
4. Carefully push the dipstick all the way into the guide tube and pull it out again
5. The oil level should be between the two marks on the dipstick.

As with fuel economy, oil consumption is directly influenced by your driving style and vehicle operating conditions.

The oil volume between the two marks on the dipstick corresponds to approx. 1.1 US quarts (1 liter). Do not fill beyond the upper mark on the dipstick. Excess oil will damage the engine.

Adding engine oil

Wait until the level has dropped to just above the lower mark before adding oil. However, never let the oil drop below this mark.

⚠ BMW engines are designed to operate without oil additives; the use of additives could lead to damage in some cases. This also applies to the manual transmission, differential and the power steering system.◀

Specified engine oil

The quality of the engine oil is extremely important for the function and life of an engine. Based on extensive testing, BMW has approved only certain types of engine oils.

Use only approved "BMW High Performance Synthetic Oil."

If you are unable to obtain "BMW High Performance Synthetic Oil," you can add small amounts of synthetic oil in between oil changes. Use only oils with API SH specification or higher.

▷ Ask your BMW center for details concerning the specific "BMW High Performance Synthetic Oil" or "synthetic oils" that have been approved.◀

You can also call BMW of North America at 1-800-831-1117 or visit this website: www.bmwusa.com for more detailed information.

Viscosity ratings

CarManuals2.com

Viscosity is the oilflow rating as established in SAE classes.

Select the correct SAE class based on the climatic conditions in the area where you typically drive your BMW Z8 roadster.

▷ Approved oils are SAE classes 5W-40 and 5W-30.◀

These oils may be used for driving in all ambient temperatures.

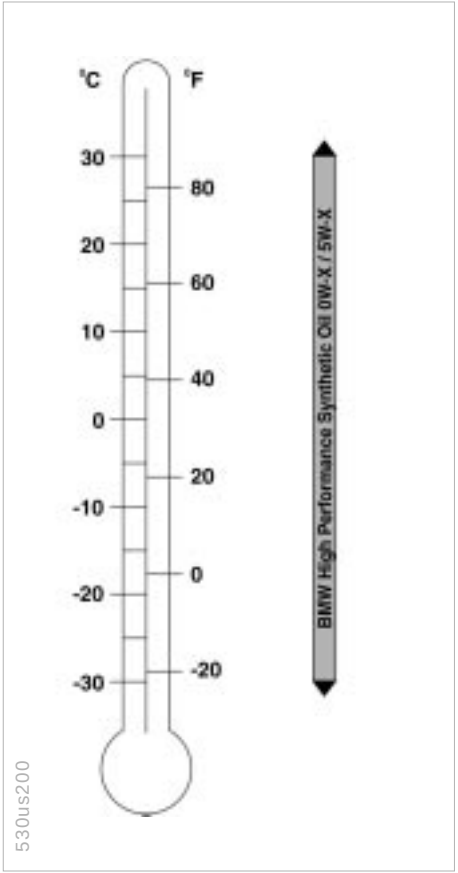

Engine oil

Comply with the applicable environmental laws regulating the disposal of used oil.◀

Recommendation: have the oil changed by your BMW center only.

Continuous exposure to used oil has caused cancer in laboratory testing.
For this reason, thoroughly wash any areas of skin that come into contact with oil using soap and water.
Always store oils, grease, etc. so that they are inaccessible to children, and follow warning lables on containers.◀

Coolant

CarManuals2.com

Do not add coolant to the coolant system when the engine is hot, since escaping coolant can cause burns.
To avoid the possibility of damage later on, never use anything other than factory-approved, nitrite- and amino-free, extended-duty antifreeze with corrosion inhibitor. Your BMW center is familiar with the official specifications.
Antifreeze and corrosion inhibitor is hazardous to health. Always store in tightly closed original containers kept well out of the reach of children.
Extended-duty antifreeze with corrosion inhibitor contains the flammable substance ethylene–glycol: never allow the antifreeze to spill onto hot engine components, as fire and serious personal injury in the form of burns could result.◀

Comply with the applicable environmental laws regulating the disposal of extended-duty antifreeze with corrosion inhibitor.◀

Checking coolant level

The correct coolant level when the engine is cold (approx. 68°F/20°C):

Up to the "MAX" mark on the translucent expansion tank.

Coolant

Adding coolant

To guard against the possibility of scalding injuries, always wait until the engine cools (temperature gauge needle in blue sector) before unscrewing the cap on the expansion tank.

1. Turn the cap slightly counterclockwise in order to allow accumulated pressure to escape. Then open
2. Slowly add coolant until the correct level is reached – do not overfill.

The coolant is a mixture of water and extended-duty antifreeze with corrosion inhibitor. Always maintain the prescribed all-season 50:50 mixture ratio for year-round protection against internal corrosion. No other additives are required.

Replace the coolant every three years.

Brake fluid

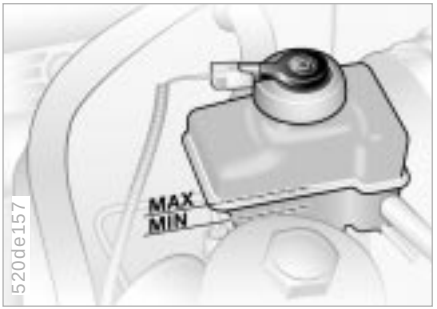

The brake warning lamp comes on and the parking brake has been released: The brake fluid is too low.

For adding brake fluid or for determining and correcting the cause of brake fluid loss, consult your BMW center. Your BMW center is familiar with the specifications for factory-approved brake fluids (DOT 4).

Brake fluid loss can increase brake pedal travel. For this type of situation, refer to the notes on page 92.

CarManuals2.com

Brake fluid is hygroscopic, that is, it absorbs moisture from the air over time.
In order to ensure the safety and reliability of the brake system, have the brake fluid changed every two years by a BMW center. Refer also to the Service and Warranty Information Booklet (US models) or the Warranty and Service Guide Booklet (Canadian models). Brake fluid is toxic and attacks the vehicle's paintwork. You should always store it in its original container and in a location that is inaccessible to children.
Do not spill the fluid and do not fill the brake fluid reservoir beyond the "MAX" mark. The brake fluid could ignite upon contact with hot engine parts and cause serious burns.◀

Comply with the applicable environmental laws regulating the disposal of brake fluid.◀

In the engine compartment, on the right-hand strut dome (arrow) and on the upper left-hand edge of the instrument panel.

CarManuals2.com

The BMW Maintenance System has been designed as a reliable means of ensuring that our customers enjoy optimal vehicle safety and reliability with only minimum effort and expense.

Please keep in mind that regular service not only plays a vital role in ensuring continued vehicle safety, but also plays a significant role in maintaining your vehicle's resale value.

Service Interval Display

Carmanuals2.com

Optimal maintenance intervals are calculated by using advanced technology; these then are indicated in the Service Interval Display. While conventional systems rely on distance traveled alone to determine when service is due, the BMW Maintenance System has for years considered the actual conditions under which the vehicle operates, because miles can be traveled in many different ways:
From the maintenance point of view, 62,000 miles (100,000 km) accumulated in short-distance urban driving are not equivalent to the same distance covered at moderate speeds in long-distance highway travel.

The BMW Maintenance System, which is based on operating conditions, includes the Engine Oil Service and Inspections I and II.

Determining the maintenance intervals according to the actual loads on the vehicle covers every kind of operating situation. However, even those drivers who put significantly less than 6,000 miles (10,000 km) on their vehicle anually should have the engine oil changed at least every two years since oil deteriorates over time, regardless of use.

Service Warranty Information Booklet (US models)/Warranty and Service Guide Booklet (Canadian models)

For additional information on maintenance intervals and procedures, please refer to the Service and Warranty Information Booklet (US models) or the Warranty and Service Guide Booklet (Canadian models).

▷ Have your BMW center perform maintenance and repair work.
Your BMW center is always informed on the latest maintenance work and repair techniques and equipped with the required special tools. In addition, checking parts known from experience to be subject to wear is a permanent part of the maintenance specifications.
Be sure that all maintenance work is confirmed in the Service and Warranty Information Booklet (US models) or the Warranty and Service Guide Booklet (Canadian models).
These entries are your proof of regular vehicle maintenance and the basis for warranty claims.◀

Washing your vehicle

You can have your new BMW washed in an automatic car wash. Car-wash systems that do not employ brushes are preferable.

Wipe away tough dirt and loosen and remove dead insects before washing the vehicle.

In order to avoid spots, do not wash the vehicle when the hood is warm, or during or immediately after exposure to strong sunlight.

In order to protect your convertible top, do not use washing programs featuring wax application on your vehicle. The small amount of beading wax always used in automatic car washes will not harm the convertible top.

When using an automatic car wash, be sure that

- ▷ the car-wash system is suited for the dimensions of your vehicle
- ▷ no damage will occur on vehicles with attached body accessories (such as spoilers or antennas). Consult the car-wash operator if necessary
- ▷ the wheels and tires of your vehicle cannot be damaged by the conveyance devices of the car-wash system
- ▷ the vehicle is cleaned with minimum brush pressure, and that ample water is available for washing and rinsing.

Parts of the vehicle which are inaccessible to the automatic washer – such as door sills, door and hood edges, etc. – should be cleaned by hand.

In the winter months, it is especially important to ensure that the vehicle is washed on a regular basis. Large quantities of dirt and road salt are difficult to remove, and they also cause damage to the vehicle.

If spray wands or high-pressure washers are used, be sure to maintain an adequate distance between the spray source and the vehicle's surface. Inadequate distance and excessive pressure can damage or weaken the finish, making it more susceptible to further damage. In addition, moisture could penetrate to vehicle components, leading to long-term damage.◀

When cleaning the headlamps, please observe the following:

- ▷ Do not clean by wiping with a dry cloth. Never use abrasives or strong solvents to clean the covers
- ▷ Remove dirt and contamination (such as insects) by soaking with BMW Car Shampoo and then rinsing with plenty of water
- ▷ Always use a deicer spray to remove accumulated ice and snow – never use a scraper.◀

After washing the vehicle, apply the brakes briefly to dry them. Braking efficiency might otherwise be reduced by the moisture and the brake rotors could also be corroded.◀

CarManuals2.com

Cleaning and care of the convertible top

The appearance and life of the convertible top are highly dependent on its proper care and operation. You should pay particular attention to the following instructions if your vehicle has a light-colored top.

Protect the vehicle from exposure to intense sunlight whenever possible by parking it in the shade. This will help to prevent the paint, rubber and fabric-covered parts from being attacked.

Never fold up the convertible top and store it in the convertible top compartment when it is wet, dirty or frozen, as mildew stains and chafe spots may result.

To prevent the formation of a crease in the rear window and to avoid mildew stains, do not leave the top folded in the convertible top compartment for long periods.

If the vehicle will be parked for lengthy periods in an enclosed space, be sure that the convertible top is dry and that there is adequate ventilation.

CarManuals2.com

Clean off bird droppings immediately, since they attack the convertible top and cause the rubber seals to swell due to their caustic characteristics.

Besides water, treat rubber seals only with talcum powder, rubber-care products or silicone spray, particularly when they feel dry or tend to stick.

Eliminate noises such as squeaks with lubricant spray.

Never use sharp-edged objects to clean the rear window of snow or ice. If using a deicer spray, make sure that none of the spray comes into contact with the convertible top. Because of the risk of damage and discoloration, do not apply adhesive tape, stickers, or similar materials to the window or cover with plastic film.

Dents and discoloration may show up on the convertible top because of improper care, cleaning or as the result of excessive usage. The convertible top and its seams may also develop leaks. These problems are not covered by the warranty. For repairs, please consult your BMW center.

Special wash for the top

Respond to more extensive dirt, which is especially visible on light-colored top materials, by cleaning the top with the BMW Convertible Cleaning Set. Please proceed as follows:

Spray the convertible top with the cleaning agent and then rub with a well-dampened sponge using circular motions until a foam develops. Then you can finish washing the vehicle in an automatic car wash. After three to five washings the convertible top should be treated with a special impregnating spray. Please follow the instructions on the spray can.

▷ To remove stains from the convertible top, use only BMW-approved cleaning agents. Do not use spot removers, paint thinners, solvents, gasoline or similar substances for removing stains; these agents destroy the rubber seals, which in turn leads to leaks.
A full range of car-care products is available from your BMW center.◀

Hardtop

Please observe and follow the instructions for caring for your vehicle starting on page 117.

Exterior finish

CarManuals2.com

Your vehicle is protected by a multilayer finish applied at the factory. Protection against corrosion is provided by cataphoretic immersion priming using materials that have been specially developed over many years of sustained research.

Regular maintenance makes an important contribution to maintaining the safety and value of your vehicle.

Increasing awareness of the effects of harmful environmental factors on vehicle finishes have led paint and vehicle manufacturers to initiate programs designed to further improve the durability of their finishes. Despite this, environmental factors that occur locally or regionally can have negative effects on the finish of your vehicle. This should guide you in determining the frequency and extent of your efforts to maintain the vehicle finish.

Road dirt, tar spots, dead insects, animal droppings (strong alkali effect) and even tree secretions (resins and pollen), all contain substances capable of causing damage to the finish of your vehicle if allowed to remain for an extended period of time (such as stains, bumps, scratches and separation of the top coat).

In industrial areas, deposits of flue dust, lime, oily soot, precipitation containing sulfur-dioxide (acid rain) and other environmental pollutants will damage the vehicle's finish unless adequate care is provided – even though this is generally limited to the outside horizontal surfaces.

In tropical climates intense ultraviolet radiation and high atmospheric humidity are accompanied by temperatures that can exceed 105 °F (40 °C) in the shade. Under those conditions, light paints can reach temperatures of up to 175 °F (80 °C) while darker finishes can heat to levels as high as 250 °F (120 °C).

Caring for the vehicle finish

Regular washing is a preventive measure against long-term effects from substances that are harmful to the vehicle's finish, especially if you drive your vehicle in areas with high levels of air pollution or natural contaminants (tree resins, pollen).

Nevertheless, you should immediately remove especially aggressive substances. Failure to do so can lead to changes in the paint's chemical structure or to discoloration. Gasoline spilled during refueling, oil, grease, brake fluid and bird droppings should always be cleaned up immediately.

Any contamination remaining on the surface of the vehicle will be especially conspicuous after washing. Use cleaning fluid or alcohol and a clean cloth or cotton pad to remove. Remove tar spots with tar remover. After cleaning, the affected areas should be waxed to ensure continued protection.

▷ Use the cleaning and car-care products available at your BMW center.◀

Waxing your vehicle

CarManuals2.com

Protect the finish using carnauba or synthetic-based waxes only.

The best way to determine when the finish needs to be waxed is by noting when water stops beading on the surface.

You can use a glass cleaner to remove any wax or silicone that may have been left on the windows during waxing.

▷ Use the cleaning and car-care products available at your BMW center.◀

Repairing the paint

You can touch up small areas of paint damage with a BMW spray paint or a BMW touchup stick.

The color code of your vehicle is provided on a tag located near the vehicle data plate and on the first page of the Service and Warranty Information Booklet (US models) or the Warranty and Service Guide Booklet (Canadian models).

More extensive paint damage should be repaired professionally in accordance with the manufacturer's instructions. Your BMW center uses original BMW finish materials in accordance with approved repair procedures.

Window care

You can use window and glass cleaner to clean inside window surfaces and mirrors without smearing and streaking. Never use polishing pastes or abrasive (quartz) cleansers on mirror lenses.

Clean the wiper blades with soapy water. The wiper blades should be replaced twice a year – before and after the cold season.

▷ Use only wiper blades approved by BMW.◀

Caring for other vehicle components and materials

Light-alloy wheels should be treated with alloy wheel cleaner, especially during the winter months. However, do not use aggressive products containing acids, strong alkalis or abrasives. Do not use steam cleaners operating at temperatures above 140 °F (60 °C). Follow the manufacturer's instructions.

Carefully clean chrome parts such as lamp sockets assemblies, door handles and similar items with an ample amount of clean water – and shampoo, too, if necessary – especially if there is an accumulation of road salt. Use a chrome polish for an additional treatment.

Use water to clean plastic components, headliners, lamp lenses, and surfaces sprayed dull black – adding vinyl shampoo, if necessary. Do not allow moisture to soak through the seats or headliner. Never use solvents such as lacquer thinner, heavy-duty grease remover, fuels, or similar substances. Use a soft, clean cloth to wipe off the clear covers of the instruments, using methylated spirits with distilled water as a cleaning solvent, if necessary, at a mixing ratio of 1:1.

CarManuals2.com

Rubber components should be cleaned with water only; a rubber treatment or silicone spray may also be applied.

The safety belts should be cleaned with a mild soap and water solution without being removed from the vehicle. Never attempt chemical or dry cleaning, as damage to the belt fabric could result.

After cleaning, never allow the inertia reel to retract the belts until they are completely dry. Dirty safety belts prevent the inertia reel mechanism from retracting the strap properly, thus constituting a safety hazard.

Heavily soiled floor carpets and mats* can be cleaned with an interior cleaner. The floor mats can be removed from the vehicle for cleaning.

Clean aluminum surfaces with water and, if necessary, with a mild soap. Never use solvents such as lacquer thinner, heavy-duty grease remover, fuels, or similar substances.

Use only a wet cloth to clean painted inner parts. Dry them afterwards with a soft cloth.

▷ Use the cleaning and car-care products available at your BMW center.◀

Leather care

The leather upholstery used by BMW is a natural product of the highest quality, processed using state-of-the-art methods to ensure that it will maintain its high quality for years to come, provided that it is properly cared for.

Because the leather upholstery is crafted using unadulterated natural materials, it will display individual characteristics and possible surface irregularities. You should also bear in mind that this kind of material needs special care and attention.

Regular periodic cleaning and care are essential, as dust and road dirt act as abrasives in the pores and creases of the material. This leads to wear spots and premature brittleness on the surface of the leather. We therefore suggest that you clean the leather with a vacuum cleaner or cloth at frequent intervals.

For cleaning, use BMW leather cleaning foam.

CarManuals2.com

Since dirt and grease gradually attack the protective layer of the leather, the cleaned surfaces should be treated with BMW leather care agent. This also prevents static electricity.

For protection against dampness or moisture, treat the leather with a BMW impregnating agent.

We recommend that you perform this procedure twice a year on leather exposed to normal use.

Spills should be wiped up immediately. Remove grease and oil stains without rubbing, but rather by dabbing with spot remover.

If the upholstery is to be exposed to intense sunlight or if the vehicle is to be stored for an extended period, cover all leather surfaces (or, better yet, the windows) to prevent fading.

Use the cleaning and car-care products available at your BMW center.◀

Cleaning agents can contain dangerous or health-threatening substances. Therefore, always comply with the warnings and danger notices on the package.
Open the doors or windows on your vehicle when cleaning the interior (when the convertible top is closed).
Never clean your vehicle with solvents or other materials not specifically intended for this application.◀

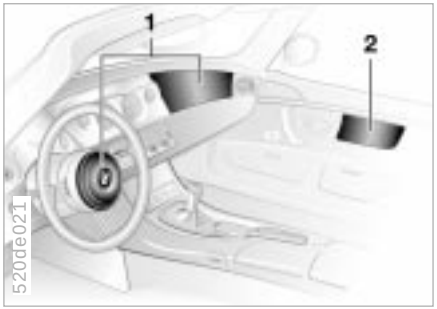

1 Front airbags on the driver and passenger side

2 Side airbags on the driver and front passenger side

Important safety notices

Do not attempt to remove the gas generators of the airbag restraint system from the vehicle. Testing and servicing are to be performed only by trained technicians.
In the event of a malfunction, deactivation, or triggered actuation (as a response to an accident) of the airbag restraint system, consult your BMW center for repairs or service operations.

Do not modifiy or tamper with either the wiring or the individual components in the airbag system. These include the padded steering wheel hub, the instrument panel, and the side trim panels of the doors. Never apply adhesive materials to these components or cover or modify them in any way. Do not remove or dismantle the steering wheel yourself.
To ensure compliance with applicable safety regulations, have a BMW center dispose of airbag generators.
Unprofessional attempts to service the system could lead to failure in an emergency or undesired airbag activation, either of which could result in personal injury.◀

CarManuals2.com

Vehicle storage

If the vehicle is to be stored for more than three months, ensure that the following service operations are carried out first.◀

Preparations for storage

Have your BMW center perform the following procedures:

1. Clean and apply a rust proofing agent or other treatment to the engine, engine compartment, undercarriage, axles and major components in accordance with approved repair procedures. Wash the vehicle, clean the interior and treat painted and chromed parts. Clean the weather-stripping around the hood, luggage compartment and doors
2. Change engine oil and oil filter at operating temperature. As an additional corrosion protection measure, an anticorrosive agent can be added to the engine in accordance with the manufacturer's instructions
3. Check the coolant level and concentration and top off if necessary
4. Check the fluid level of the windshield washer fluid reservoir; top off if necessary
5. Fill the fuel tank completely to prevent the formation of condensation
6. Increase the tire inflation pressure to 51 psi (350 kPa).

Before parking the vehicle

1. Dry the parking brake and footbrake by brake applications to prevent the brake discs and drums from corroding
2. Park the vehicle in a covered, dry, and well-ventilated area. Place the transmission in first gear or, if necessary, chock the wheels to prevent the vehicle from rolling. Do not engage the parking brake
3. Remove the battery, charge it completely and store it in a cool (but frost-free) room
4. Remove the hardtop and store it separately, refer to page 96
5. Close the convertible top.

During storage

Recharge a battery that has been taken out of the vehicle every six months. If it is not recharged, it will not be serviceable. Every time the battery is discharged, especially over extended periods, its service life is reduced.

Removing the vehicle from storage

Recharge the battery if the "Magic Eye" turns black, refer to page 138.

Then have Inspection I performed by your BMW center, including a brake fluid replacement, if necessary. Refer to the Service and Warranty Information Booklet (US models) or the Warranty and Service Guide Booklet (Canadian models).

CarManuals2.com

Technical modifications

Any BMW center will be happy to advise you concerning the advisability, legal requirements and factory recommendations for technical modifications to the vehicle. The BMW center will require the Vehicle Identification Number and, in some cases, the engine number as well.

Light-Emitting Diodes (LEDs)

Light-emitting diodes installed behind translucent lenses serve as the light source for many of the controls and displays in your vehicle. These light-emitting diodes are similar to conventional lasers.

Do not remove the protective lens and avoid staring directly at the unfiltered beam for extended periods (several hours). To do so could result in inflammation of the iris.◀

California Proposition 65 Warning

California laws require us to state the following warning:

Engine exhaust, some of its constituents, and certain vehicle components contain or emit chemicals known to the State of California to cause cancer and birth defects or other reproductive harm.◀

CarManuals2.com

OBD interface socket

The Onboard Diagnostic (OBD) interface socket is located on the driver's side at the bottom of the instrument panel and under a cover. The cover has the letters "OBD" on it.

The purpose of the OBD system is to ensure proper operation of the emission control system throughout the vehicle's lifetime by monitoring emissions-related components and systems for deterioration and malfunction.

CarManuals2.com

An illuminated indicator informs you of the need for service, but not of the need to stop the vehicle. However, the systems should be checked by your BMW center at the earliest possible opportunity.

Under certain conditions, the indicator will blink or flash. This indicates a rather severe level of engine misfire. When this occurs, you should reduce speed and consult the nearest BMW center as soon as possible. Severe engine misfire over only a short period of time can seriously damage emission controll components, especially the catalytic converter.

Service Engine Soon warning lamp for Canadian models.

When the filler cap is not properly tightened, the OBD system can detect the vapor leak and the indicator will light up. If the filler cap is subsequently tightened, the indicator should go out within a few days.◀

CarManuals2.com

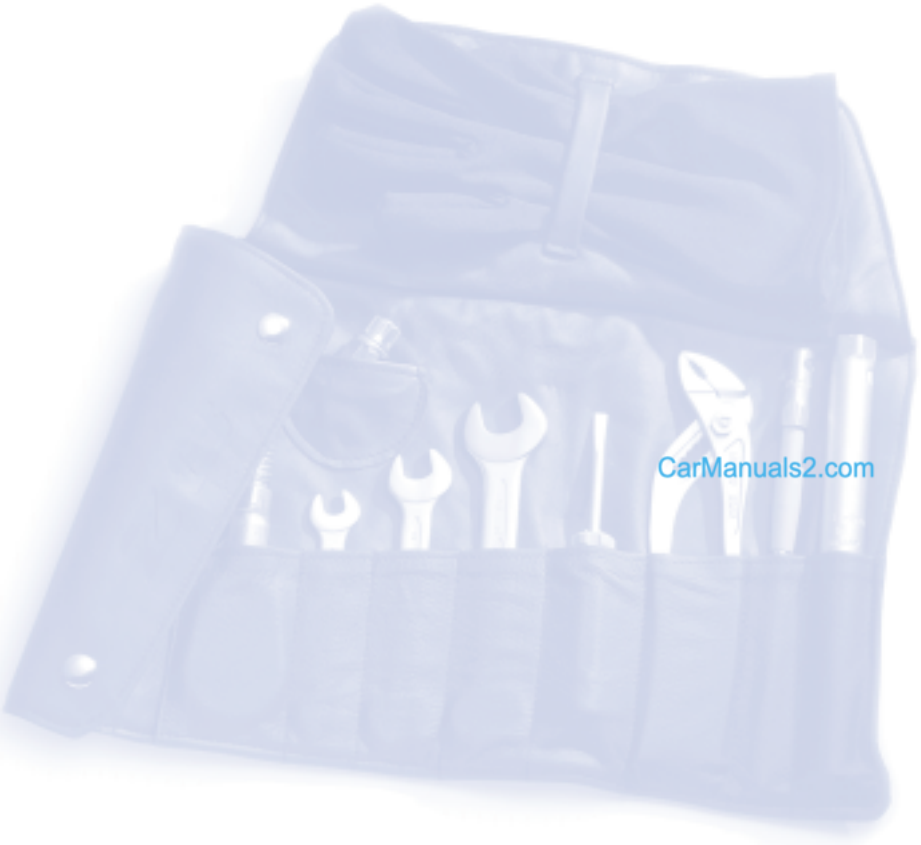

CarManuals2.com

Replacement procedures:
Onboard tool kit 130
Windshield wiper blades 130
Lamps and bulbs 131
Changing a wheel 137
Battery 138
Fuses 140

In case of electrical malfunction:
Fuel filler door 142
Luggage compartment lid, storage compartment 142
Passenger door 143
Closing the convertible top 143

Giving and receiving assistance:
Jump-starting 145
Towing the vehicle 146

CarManuals2.com

Onboard tool kit

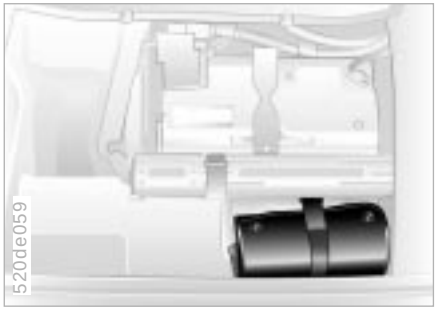

The onboard tool kit is located under the luggage compartment's floor panel.

Windshield wiper blades

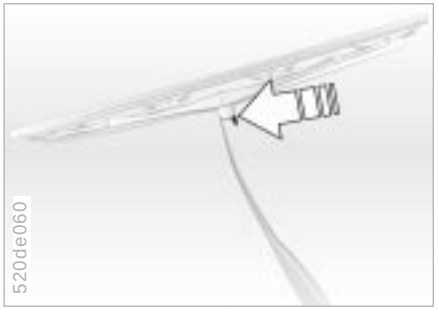

1. To move the wipers to the fold-out position:
   Turn the ignition on. Set the wiper lever in position 1 (intermittent mode). Turn the ignition back off during the wiper-delay pause. The wipers will then be roughly vertical
2. Swivel the wiper arm completely out from the windshield
3. Position the wiper blade at an angle and pull the release spring (arrow)
4. Fold the wiper blade down and unhook it toward the windshield
5. Pull the wiper blade past the wiper arm toward the top
6. Insert a new wiper blade and press it until you hear it click into place.

Fold the wipers back onto the windshield before turning the ignition key to position 1 or 2. If you do not, the wipers could be damaged.◀

Use only wiper blades approved by BMW.◀

CarManuals2.com

The lamps and bulbs make essential contributions to the safety of your vehicle. Therefore, comply fully with the following instructions during bulb replacement. If you are not familiar with any of the procedures, consult your BMW center.

Do not touch the glass portion of a new bulb with your bare hands since even small amounts of impurities burn into the surface and reduce the service life of the bulb. Use a clean cloth, paper napkin, or a similar material, or hold the bulb by its metallic base.◀

A replacement bulb set is available from your BMW center.

Whenever working on the electrical system, switch off the electrical accessory you are working on or disconnect the cable from the negative terminal of the battery. Failure to do this could result in short circuits.
To prevent injuries and damage, comply with any instructions provided by the bulb manufacturer.◀

When cleaning the headlamps, please observe the following:

CarManuals2.com

▷ Do not wipe dry (scratches). Never use abrasives or strong solvents to clean the covers
▷ Remove dirt and contamination (such as insects) by soaking with BMW Car Shampoo and then rinsing with plenty of water
▷ Always use a deicer spray to remove accumulated ice and snow – never use a scraper.◀

Xenon lamps

The main headlamps for your BMW Z8 roadster have been designed using xenon-light technology. The service life of these bulbs is very long and the probability of a failure is very low, provided that they are not switched on and off an unusual number of times.
Should a lamp ever fail, however, please contact your BMW center for assistance.

The xenon-light unit operates at extremely high voltages; contact with the unit's electrical components can be fatal. We therefore urge you to refer all service and repairs, including bulb changes, to qualified professional technicians.◀

Neon lamps

The front turn signal indicators (side marker lamps), the rear turn signal indicators, the rear and brake lamps, as well as the high-mounted brake lamp are of neon-light technology. The service life for these lamps is very high and the likelihood of failure very minimal.
Should a lamp ever fail, however, please contact your BMW center for assistance.

Side turn signal indicators

10 watt bulb

Please contact a BMW center in the event of a malfunction.

Parking lamps

5 watt bulb

Please contact a BMW center in the event of a malfunction.

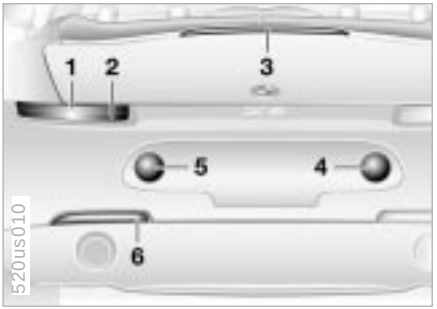

Tail lamps

1	Turn signal indicator	red
2	Rear lamp/Brake lamp	red
3	High-mount brake lamp	red
4	Backup lamp	red/white
5	Rear fog lamp	red
6	Reflector	red

CarManuals2.com

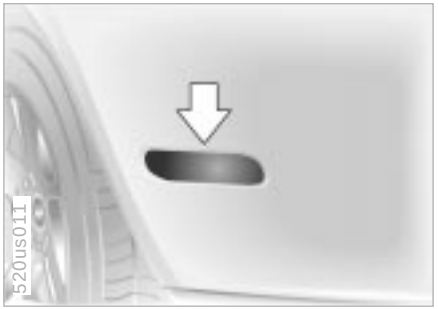

Side marker lamps, rear

Please contact a BMW center in the event of a malfunction.

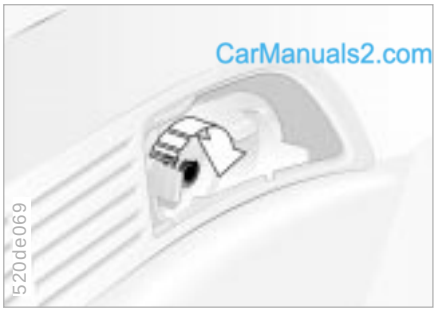

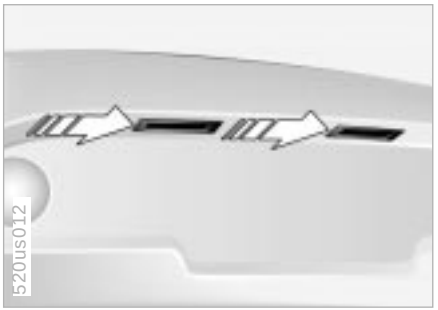

To replace the rear fog lamp

21 watt bulb

1. Unlock the ventilation grill by giving it a ¼ turn (use a screwdriver or coin) and remove it
2. Reach into the opening, turn the bulb holder to the left and take it out
3. Replace the bulb.

To replace the backup lamp

21 watt bulb

Replace the bulb using the same procedure as for the rear fog lamp.

To replace the license plate lamp

5 watt bulb

1. Turn the lamp to the right and take it out by pulling downward
2. Turn the lamp socket toward the rear and take it out
3. Replace the bulb.

To replace the door warning lamp

5 watt bulb

1. Pry the lamp out by pressing on the narrow side with a screwdriver
2. Turn the bulb holder to the left and remove it
3. Replace the bulb.

To replace the exit lamp

5 watt bulb

1. Pry the lamp out by pressing on the narrow side with a screwdriver
2. Replace the bulb.

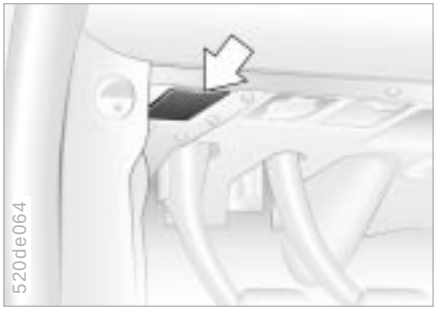

To replace the footwell lamp

5 watt bulb

1. Pry the lamp out by pressing on the narrow side with a screwdriver
2. Replace the bulb.

CarManuals2.com

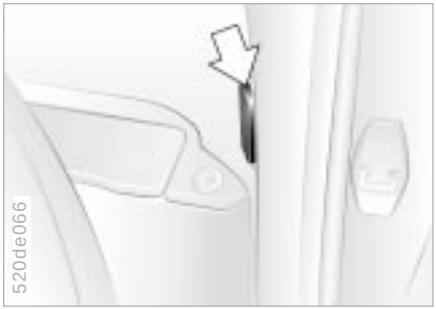

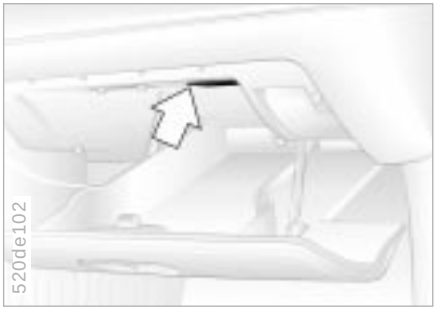

To replace the interior lamp

Front:

Xenon bulb, 6 watts
Interior lamp/Reading lamp

1. Pry the lens out using a screwdriver
2. Pull the lamp socket out of the lamp insert
3. Remove and replace the bulb.

Rear:

5 watt bulb

1. Use a screwdriver to remove the lens from the side
2. Replace the bulb.

To replace the bulb in the glove compartment

5 watt bulb

1. Pry the lamp out using a screwdriver
2. Remove the reflector
3. Replace the bulb.

CarManuals2.com

To replace the luggage compartment lamp

6 watt bulb

1. Pry the lamp out using a screwdriver
2. Remove the reflector
3. Replace the bulb.

To replace the engine compartment lamp

10 watt bulb

1. Using a screwdriver, press on the black detent and remove the lamp lens
2. Replace the bulb.

CarManuals2.com

Safety tires

Your BMW Z8 roadster is equipped with safety tires.
The safety tires are made of self-supporting tires mounted on specially-designed wheel rims. Special reinforcement elements support the sidewalls in the event of pressure loss. Although tire performance is then restricted, the vehicle can still be driven on the deflated tire for a limited distance. Your vehicle is equipped with a tire pressure monitor that signals you in case of a flat tire.

In the event of a flat tire

The red indicator lamp on the instrument panel will flash in the event of a flat tire. In addition, a gong will sound. Refer to page 67.

Carefully reduce speed to less than 50 mph (80 km/h), avoiding any hard braking or steering maneuvers while doing so.

You will still be able to drive approx. 155 miles (250 km) on your safety tire, until you can get to a safe place to park, a gas station, or to your nearest BMW center. Under minimum vehicle loading, it could conceivably last more than 155 miles (250 km).

If you cannot immediately determine which tire is defective just by looking at it, then check the tire pressure in all four tires.

Have your BMW center replace your tires. For safety reasons, do not have safety tires repaired. Your BMW center has been trained to work with the safety tires and is equipped with the necessary special tools.◀

If necessary, please have your BMW center switch the tires on your vehicle from summer to winter tires, or the reverse.◀

CarManuals2.com

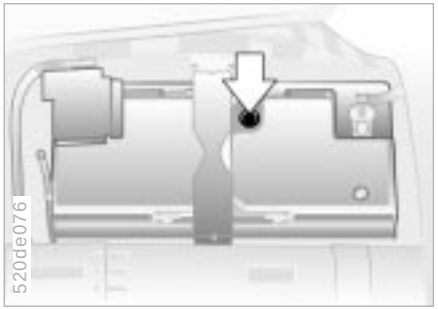

Battery posts, terminals, and related accessories contain lead and lead compounds. Wash hands after handling.◀

Installation location

The battery is located under the luggage compartment's floor panel.

Charge condition

You can read the charge condition of the battery with the "Magic Eye" hydrometer (arrow):

- ▷ Green: adequate charge
- ▷ Black: not charged adequately. The battery must be recharged. Please contact your BMW center for additional information
- ▷ Yellow: replace the battery.

The service life specified for the battery can be achieved only if it is always kept adequately charged. If the vehicle is primarily used for stop-and-go traffic, be sure to check the charge state often.◀

Maintenance

The battery is completely maintenance-free. That means that the original battery acid will normally last for the service life of the battery under moderate climatic conditions.

For all questions regarding the battery, please consult your BMW center. Since the battery is absolutely maintenance-free, the following is for your information only.◀

Carmanuals2.com

Symbols

You will find the following symbols on your vehicle battery. To avoid injury, please comply with the following precautions whenever you work with or near the battery.

Before handling the battery, please read the following information.

Wear eye protection. Do not allow particles containing battery acid or lead to come into contact with eyes, skin, or clothing.

Battery acid is extremely corrosive. Wear eye protection and protective gloves. Do not tip the battery. Battery acid can leak from the ventilation openings.

Be sure that children keep well away from batteries and battery acid.

Never allow sparks or open flame near the battery. Do not smoke in the vicinity of the battery. Avoid creating sparks when working around electrical cables or equipment. Turn the key to position 0 in the ignition when disconnecting or connecting the battery. Do not short-circuit the battery terminals. This creates a risk of injury from high-energy sparks.

A highly explosive gas is generated when the battery is charged.

If you happen to get acid in your eyes, rinse thoroughly for 15 minutes with clear water. Consult a physician immediately. If you get acid spray on your skin or clothing, rinse with plenty of water. If acid is accidentally ingested, consult a physician immediately.

In order to protect the battery case from ultraviolet radiation, do not place it in direct sunlight. A discharged battery can freeze. Store the battery in areas where temperature remains above freezing.

Removing and installing

Do not disconnect the battery cable when the engine is running. Disconnecting the battery cable when the engine is running will cause a voltage surge which will damage the vehicle's onboard electronics.
Do not make any modifications in the wires to the positive terminal. If you do so, the protective function of the safety battery terminal is no longer ensured. Repairs and disposal may only be performed by specially trained personnel.◀

When removing, first disconnect the cable to the negative terminal, then disconnect the cable to the positive terminal. Loosen the center adjusting screw for the battery's retaining strap (use the screwdriver found in the onboard tool kit) and remove the bracket.

When installing, first connect the cable for the positive terminal, then the cable for the negative terminal.

When installing, make sure that the battery is seated properly, and that the battery bracket is installed with the center adjusting screw. Failure to observe these precautions could result in an inadequately secured battery, which could then shift in an accident.◀

CarManuals2.com

Charging the battery

Charge the battery in the vehicle only when the engine is not running. Use the connections provided in the engine compartment (for correct connections, refer to "Jump-starting" on page 145).

Before performing any work on the electrical system, disconnect the cable from the negative terminal. If you do not, short circuits can create the risk of fire or personal injury.◀

If you plan to park the vehicle for longer than 4 weeks, disconnect the battery from the vehicle's electrical system by disconnecting the cable at the negative terminal. Then recharge the battery with an appropriate battery charger.

If you intend to store the vehicle for longer than 12 weeks, remove the battery, charge it and store it in a cool and dust-free room where there is no danger of freezing. During storage, have the battery recharged every six months. Also, recharge the battery before it is reinstalled. Failure to observe these precautions can render the battery unsuitable for continued use. Every time the battery is discharged, especially over extended periods, its service life is reduced.

Battery

Return used batteries to a recycling point or your BMW center. Maintain the battery in an upright position for transport and storage. Secure the battery to prevent it from tilting during transport.◀

Fuses

If an electrical accessory should fail, switch it off and check the fuse.

The fuses, their individual ampere ratings and the equipment in the circuits they protect are all indicated on the cover of the fuse box in the glove compartment and on the inside of the cover panel for the storage compartment located behind the passenger's seat.

In the glove compartment

- ▷ Open the glove compartment
- ▷ Unlock the fuse box and swing it downward
- ▷ Remove the lid with the list on it. Spare fuses and plastic tweezers are located in the fuse box lid behind the passenger-side seat
- ▷ Use the plastic tweezers to remove the fuse for the accessory or equipment that has stopped working
- ▷ Replace a blown fuse, recognizable by its melted metal strip, with a new fuse that has the same color or ampere rating.

CarManuals2.com

Behind the passenger's seat

▷ Move the passenger's seat forward and open the storage compartment located behind it
The list is on the lid's inside cover.

▷ Remove the fuse box lid containing the spare fuses and the plastic tweezers

▷ Use the plastic tweezers to remove the fuse for the accessory or equipment that has stopped working

▷ Replace a blown fuse, recognizable by its melted metal strip, with a new fuse that has the same color and ampere rating.

Do not attempt to repair a blown fuse or replace it with a fuse having a different color or ampere rating. To do this could cause a fire in the vehicle resulting from a circuit overload.◀

If the fuse continues to blow, have the problem corrected by a BMW center.

CarManuals2.com

Fuel filler door

Manual release

Pull the knob with the fuel pump symbol (arrow) on the right trim panel of the luggage compartment.

Luggage compartment lid, storage compartment

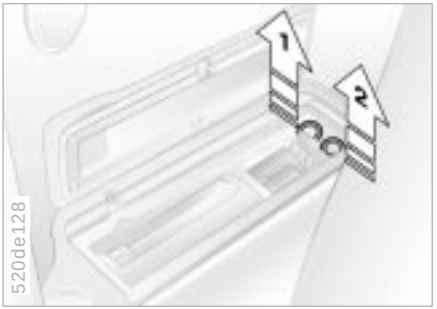

Manual release

- ▷ Tilt the backrest for the passenger's seat forward and open the storage compartment located behind it
- ▷ Lift the cover off the fuse box
- ▷ Pull the ring to release the luggage compartment lid (arrow 1) or the cellular phone holder (arrow 2).

CarManuals2.com

Manual release

▷ Unlock from the inside and open (pull on the door handle twice; refer to page 36)

▷ Moving the lever of the passenger-side door upward or downward. Upward: door is always unlocked. Downward: door is always locked, but can be opened from inside.

CarManuals2.com

Manual operation

You can close the convertible top manually, but never open it manually, because this would cause damage.◀

In the event of a malfunction, please consult your BMW center to have it corrected.

If you do close the convertible top manually, please proceed as instructed in the next column.

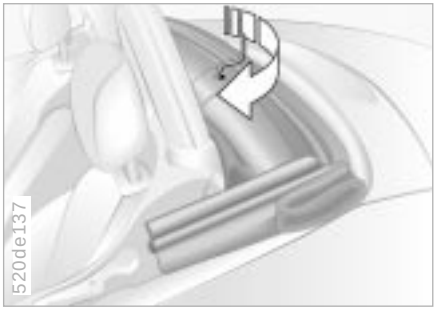

1. Take off the oval-shaped cover cap, using a screwdriver to help you if necessary
2. Put the long end of the Allen wrench (from the onboard tool kit) into the support
3. Unlock the locking retainer by turning it clockwise all the way to the right and pull the Allen wrench out again

Closing the convertible top

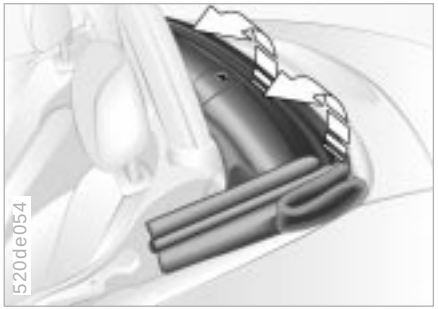

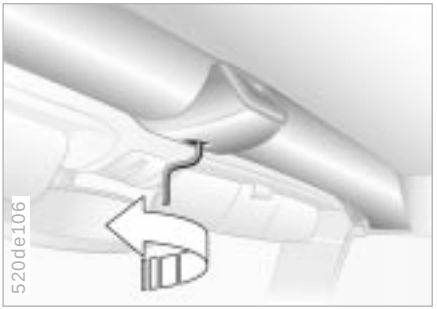

4. Pull the convertible top on the convertible top frame forward and sideways (arrows) and, using a little effort, swing it forward over the window frame
5. Gripping the recessed handle, pull the convertible top frame all the way on top of the window frame
6. Place the Allen wrench (from the onboard tool kit) into the support
7. If you keep turning the Allen wrench counterclockwise, you will hear the convertible top lock with the window frame.

CarManuals2.com

Do not use spray starter fluids to start the engine.

If the battery is discharged, the engine can be started with the use of two jumper cables and the battery of another vehicle. You can also use the same method to help start another vehicle. Use only jumper cables with fully insulated grips on the terminal clamps.

Do not touch high-voltage wiring and cables on a running engine. There is a risk of fatal injury if you do this. Carefully comply with the following instructions to avoid personal injury or damage to one or both vehicles.◀

1. Ensure that the battery in the support vehicle is also rated at 12 volts. This information is provided on the top of the battery casing
2 Do not disconnect your battery from your vehicle's electrical system. Switch off all electrical accessories in both vehicles
3 Make absolutely certain that there is no contact between the bodywork of the two vehicles – short circuit hazard
4 Start the engine on the support vehicle and allow it to run

5. Use one jumper cable (+) to connect the positive terminal of the battery in the support vehicle with the auxiliary positive terminal provided in the engine compartment of your BMW specifically for jump-starting. The cover of the auxiliary terminal for use in jump-starting your BMW is identified by a "+" symbol, refer to illustration. Lift off by pulling the tab (arrow)

CarManuals2.com

6. Next, connect one end of the other jumper cable (–) to either the support vehicle's negative battery terminal or a suitable ground on its engine or bodywork. Connect the other end to the negative battery terminal or a suitable ground on the vehicle being started. There is a special nut provided for this on the BMW (see illustration)

Follow the same sequence for connecting the jumper cables, otherwise, you run the risk of injury caused by spark generation at the battery.◀

7. Start the support vehicle's engine and let it run at an increased idling speed for a few minites. Start the engine on the vehicle needing the jump-start, and allow it to run as usual. If the first start attempt is not successful, wait a few minutes before another attempt in order to allow the discharged battery to recharge
8. Before disconnecting the jumper cables let the engines run for a few minutes
9. Then disconnect the jumper cables in reverse sequence.

Depending on the cause of the fault, have the battery recharged by your BMW center.

Towing the vehicle

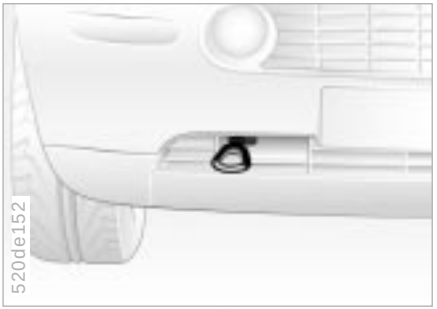

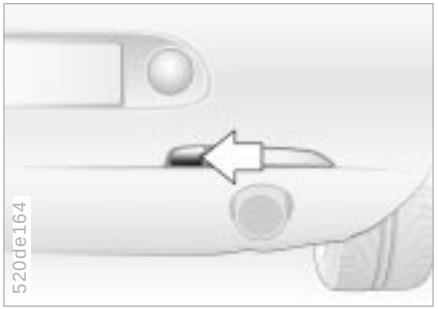

Tow fitting

The screw-in tow fitting is stored in the onboard tool kit; be sure that it remains in the vehicle at all times. This fitting is designed for installation in the tow sockets located at the front and rear of the vehicle. It is intended for towing on paved road surfaces only.
It should not be used to pull a vehicle out of deep snow, mud, sand, etc.
Always observe all applicable towing laws and regulations.

Access to tow sockets

Front:
The uppermost grille stub is clipped on the grille – which is located below the main grille on the lower right – and this grille can be pulled off, if you pull forward on it.

CarManuals2.com

Rear
Use a screwdriver to press sideways on the opening to remove the cover (arrow).

⚠ Screw the tow fitting in until it bottoms firmly. If this is not done, the threads could be damaged.
Do not tow the vehicle by any components of the running gear, or lash them down in any way. If you do so, the components could be damaged, leading to possible accidents.◀

Use only a nylon towing strap to tow the vehicle. The inherent resilience of this material helps protect both vehicles from sudden jerking movements.

Avoid "off-center" towing. Be sure that the tow rope is pulled tightly when the towing vehicle begins to move.◀

The towed vehicle should always be the lighter of the two vehicles. If this is not the case, it is no longer possible to control vehicle response.◀

Tow-starting

For instructions on jump-starting, refer to page 145.

Never attempt to use your vehicle to push another vehicle, since damage to the energy-absorbing bumpers could result.

Towing a vehicle

1. Put the shift lever in neutral
2. Towing speed:
   Max. 45 mph (70 km/h)
3. Towing distance:
   Max. 95 miles (150 km)
4. Leave the ignition key in position 1 to ensure that the brake lamps, turn signals, horn and windshield wipers remain operative, and to prevent the steering lock detent from engaging
5. Switch on the hazard warning system (comply with country-specific regulations).

Find some means of identifying the vehicle in tow, e.g. place a sign or warning triangle in the rear window.

CarManuals2.com

Make sure that the ignition key remains in position 1 even when the electrical system has failed to prevent the steering lock from engaging. The steering and brakes are without power assist when the engine is not running. This means that increased effort is required for steering and braking.◀

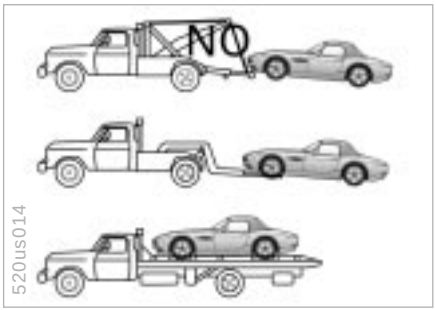

Towing with a commercial tow truck

▷ Do not tow with sling-type equipment
▷ Use a wheel lift or flatbed equipment
▷ Please comply with applicable towing laws.

Never allow passengers to ride in a towed vehicle for any reason.◀

CarManuals2.com

Airbags 150
Car radio reception 151
Dynamic Stability Control (DSC) 152
Safety belt tensioner 153
Interior rearview mirror with automatic dimmer 154
Xenon lamps 155

CarManuals2.com

Deceleration sensors continuously monitor the acceleration forces acting upon the vehicle. If there is a deceleration because of a collision, where the protection normally afforded by the safety belts is no longer sufficient by itself, then the gas generators for the front airbag will be simultaneously ignited on both the driver and passenger sides. The front airbag on the passenger side, however, will be deployed only if a second sensor has detected that the passenger is occupied.

In the event of a side collision, only the side airbags will be triggered if necessary. And only that airbag for that side of the vehicle where the collision occurred will be triggered.

The airbags located under the marked covers inflate and unfold in a matter of milliseconds. In this process, they tear through the designed separation points of the covers or press them out.

Because the inflation process must be virtually instantaneous, it is necessarily accompanied by a certain amount of ignition and inflation noise. The gas required to inflate the airbags is not dangerous, and the associated smoke then dissipates.

The entire process is completed within fractions of a second.

CarManuals2.com

Car radio reception

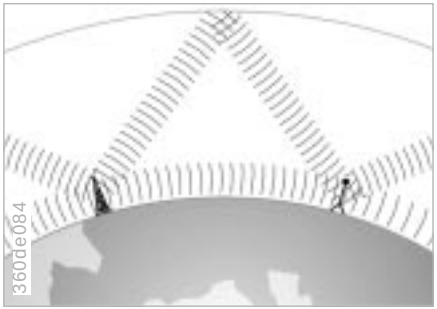

AM, LW and SW broadcast signals have substantially longer reception ranges than FM transmissions. This is because the broadcast signals propagated at ground level in the form of surface waves are also reflected from the ionosphere as atmospheric waves.

Frequency modulation (FM) provides substantially better sound quality than the other frequency bands. However, because FM transmissions rely on line-of-sight broadcast waves, their effective reception range is limited.

The limitations inherent to radio reception in a moving vehicle have been minimized by a number of innovative system designs.

CarManuals2.com

Dynamic Stability Control (DSC)

Highly sensitive sensors monitor the number of revolutions of the wheels, steering angle, lateral acceleration, brake pressure and the movement of the vehicle around its vertical axis.

When the system detects substantial differences in rotation rates between wheels, it acts to inhibit uncontrolled wheelspin by reducing the drive torque transmitted to the affected wheel(s), while also initiating selective braking intervention as needed.

In addition, DSC permanently monitors the vehicle's current operating condition and compares it with an ideal status calculated based on sensor signals. DSC reacts to deviations from this ideal status, such as incipient understeer or oversteer, to restore the vehicle's stability using a combination of adjustments to engine torque and selective braking applications at individual wheels. Dangerous skids are thus prevented before they can even start, all of this is possible, of course, only within physically possible limits.

You may need some time to become accustomed to this system's intervention. However, it provides optimum drive force and vehicle stability.

The braking intervention may be accompanied by sounds specific to the system.

CarManuals2.com

Safety belt tensioner

The safety belt tensioner responds to severe frontal collisions by tightening the belt to ensure that occupants remain firmly positioned in their seats. A gas-pressure system retracts the buckle assembly to tension the shoulder and lap belts within fractions of a second. This reduces the tendency to slide under the lap belt.

CarManuals2.com

Interior rearview mirror with automatic dimmer

The semisolid reacts chemically to this electrical current, thus providing dimming of the mirror through an infinitely-variable range (electrochromatic technology).

As a result, it is no longer necessary to dim the interior mirror manually, and the driver can concentrate completely on traffic conditions.

The interior rearview mirror with automatic dimmer reduces glare from following traffic by adapting the intensity of the reflected images to correspond to levels of light registered by the unit's sensors. The mirror reverts to its undimmed setting as soon as the light source disappears. One light sensor is mounted on the front of the interior mirror housing. This forward-facing sensor measures light intensity in the area ahead of the vehicle. The second light sensor is integrated within the mirror's frame. The electronic control system compares the light intensity from front and rear. The difference provides the basic parameter used to modulate an electrical current and induce chemical changes in a semisolid layer incorporated in the lens.

CarManuals2.com

Xenon lamps

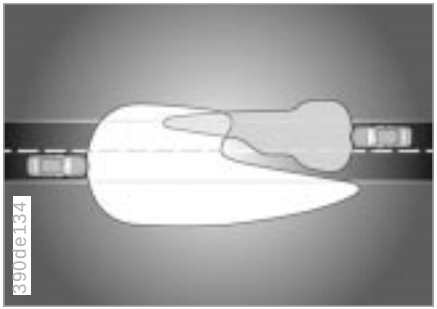

Xenon lamps illuminate the side and front areas of the vehicle much more brightly and with greater uniformity than traditional halogen lamps.

In a xenon lamp, an electric arc replaces the filament to generate intense illumination. A gas mixture in a quartz glass tube with metal vapor is ignited by a high electric voltage. The arc that is generated is then sustained by a lower voltage. When the lamp is turned on, there is a brief warm-up period. Maximum brightness is attained in approx. 15 seconds.

Xenon lamps provide significantly improved visibility, especially during adverse weather conditions and driving situations, e.g. driving at night in heavy rain or through road repair areas where there are no lane markers.

CarManuals2.com

Vehicles with xenon lamps are equipped with automatic headlamp range control. As a result, the highway is always optimally lighted, regardless of load conditions, and drivers in oncoming traffic are not blinded.

Xenon lamps make a significant contribution to highway safety since other highway users, bicyclists and motorcyclists in the right lane, and pedestrians are more easily detected.

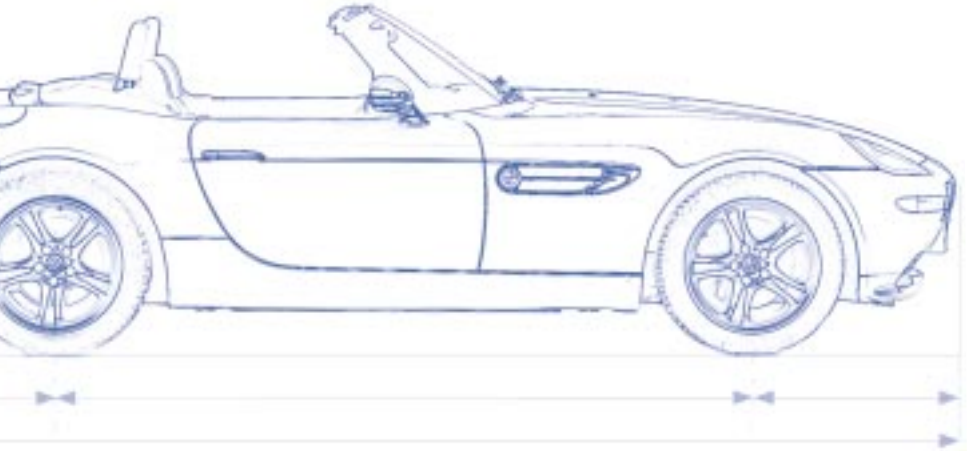

CarManuals2.com

Engine data 158
Dimensions 159
Weights 160
Capacities 161
Electrical system 162
Drive belts 162

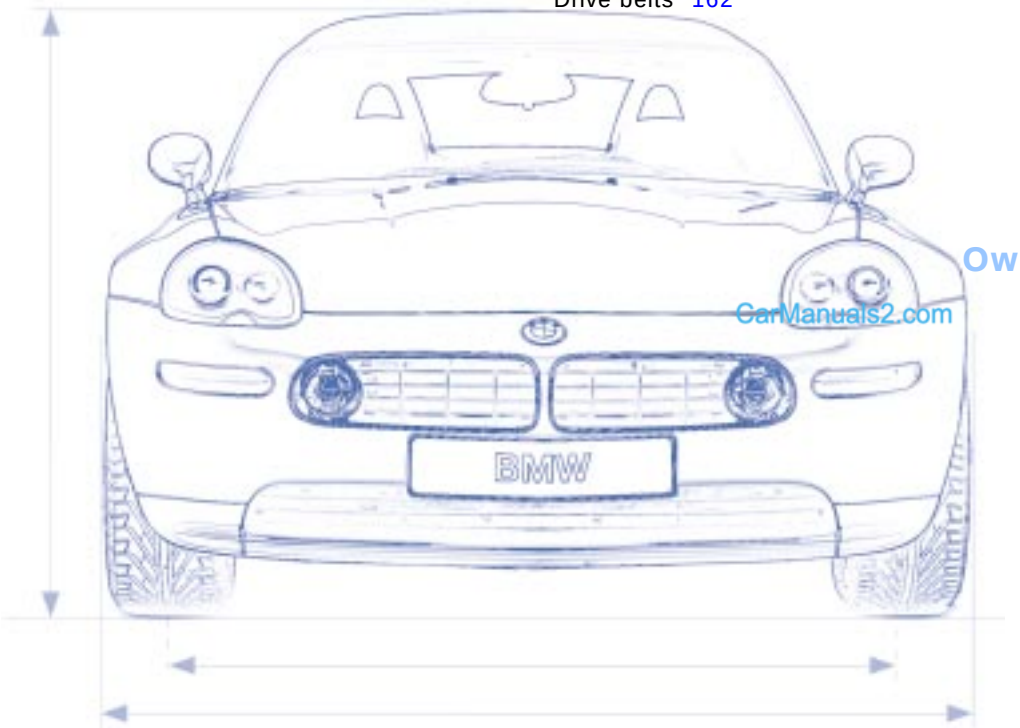

CarManuals2.com

Engine data

		BMW Z8
Displacement Number of cylinders	cu in (ccm)	301.5 (4,941) 8
Maximum output at engine speed	hp rpm	394 6,600
Maximum torque at engine speed	ft lbs (Nm) rpm	368 (500) 3,800
Compression ratio	ε	11
Stroke Bore	in (mm) in (mm)	3.50 (89.0) 3.70 (94.0)
Fuel injection system		Digital electronic engine-management system

CarManuals2.com

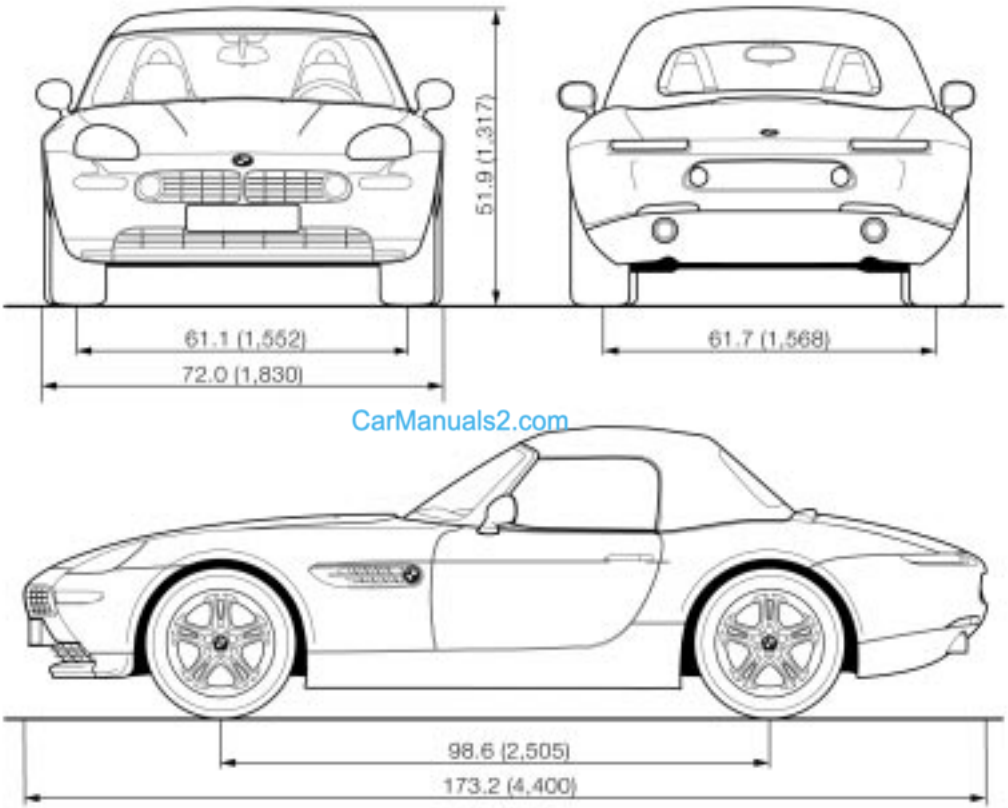

CarManuals2.com

520us016

All dimensions are given in inches (mm). Min. turning circle dia.: 38.0 ft (11.6 meters)

Weights

		BMW Z8
Curb weight (with one person, ready for operation, full tank of fuel, without hardtop)	lbs. (kg)	3,725 (1,690)
Approved gross vehicle weight	lbs. (kg)	4,255 (1,930)
Approved front axle weights	lbs. (kg)	2,028 (920)
Approved rear axle weights	lbs. (kg)	2,359 (1,070)
Approved roof load capacity	lbs. (kg)	–
Luggage compartment capacity	cu ft (litres)	7.2 (203)

Approved axle weights and approved gross vehicle weight may not be exceeded.

CarManuals2.com

			Notes
Fuel tank Reserve	gal. (liters) gal. (liters)	approx. 19.3 (approx. 73) approx. 2.5 (approx. 10)	Fuel quality: page 26
Windshield washer system/ Headlamp washer system	quarts (liters)	approx. 5.6 (approx 5.3)	For details: page 110
Cooling system including heater circuit	quarts (liters)	12.7 (12.0)	For details: page 113
Engine oil filter change	quarts (liters)	7.9 (7.5)	"BMW High Performance Synthetic Oil." For details: page 112
Manual transmission	quarts (liters)	2.0 (1.9)	Lifetime fluid; no fluid change required
Differential	quarts (liters)	1.3 (1.2)	Fluid change at the 1,200-mile-service, then lifetime fluid; no fluid change required

CarManuals2.com

Battery

12 V, 90 Ah

Spark plugs

NGK BKR 6 EQUP

This spark ignition system meets all requirements of the Canadian Interference-Causing Equipment Regulations (ICES-2).

Drive belts

Water pump – Generator – Power steering
Drive belt 7 PK 1440

A/C compressor
Drive belt 5 PK 980

CarManuals2.com

You can obtain Original BMW Parts and Accessories, as well as professional advice from your BMW center.◀

CarManuals2.com

CarManuals2.com

Online Edition for Part No. 01 41 0 156 337 - © 09/01 BMW AG

Everything from A to Z 166

Overview

Controls and features

Operation, care and maintenance

Owner service procedures

Advanced technology

Technical data

Index

CarManuals2.com

Everything from A to Z

A

ABS (Antilock Brake System) 21, 88
Accessories 6
Activated charcoal filter 75
Add
  brake fluid 114
  engine coolant 114
  engine oil 111
  washer fluid 110, 161
Adjust
  seats 45
  steering wheel 47
  temperature 74
  washer nozzles 110
Adjustment setting configuration 49
Air conditioner 72
Air distribution 74
Air outlets 72
Air pressure 99
Air supply 74
Airbags 21, 51, 123, 150
Alarm system 38
Antenna 94
Antifreeze 113
  radiator 92
Antifreeze/corrosion protection 92
Antilock Brake System (ABS) 21, 88
Anti-theft alarm system 38
Anti-theft protection 32
Approved gross vehicle weight 160
Aquaplaning 99
Ashtray 81
Attach vehicle vacuum cleaner 82
Automatic car washes 117
Automatic headlamp washers 60
Automatic windshield washer 60
Avoiding a false alarm 39
Axle weights 160

B

Backrest
  adjusting 45
  unlock 46
Backup lamps 58
  bulb replacement 133
Battery 138, 162
  add distilled water 138
  capacity 162
  charge current 20
  charging 139
  discharged 145
  recycling 140
  removing and installing 139
Belts 50
Beverage holder 80
Blower 74
BMW High Performance Synthetic Oil 112
Bore 158
Brake hydraulic system 20, 92
Brake system
  faults 92
  fluid 114
  pads 22, 92
  refer also to ABS, DBC and Disc brakes
Break-in procedure 86
Bulbs and lamps 131

C

California Proposition 65 Warning 125
Can holder 80
Car Memory 49
Car phone 81, 94
Car radio 64, 95
  reception 95, 151
  refer also to the radio Owner's Manual
Car wash 117
Care
  exterior 119
  for the vehicle finish 120
  interior 121
Catalytic converter 87
CBC (Cornering Brake Control) 21, 89
CD player, refer to the radio Owner's Manual
Cellular phone 94
  refer also to separate Owner's Manual
Central locking system 32
  key 36
Changing a wheel 137
Changing the oil filter 161
Changing tires 137
Checking air pressure 26
Checking engine oil level 111
Child restraint systems 54
Child seat safety 54
Child seats 53
Child-restraint systems 53
Cigarette lighter 82
Clean headlamps 60
Clock 64
Cockpit 16
Code, refer to the radio Owner's Manual
Combination switch, turn signal indicator/headlamp flasher 59
Compartments 79
  for stowing items 78
Compression 158

CarManuals2.com

Connector for Onboard Diagnostic 126
Consumption display 62
Controls 16
Convertible top 41
closing in event of electrical malfunction 143
manual operation 143
Coolant 113, 161
Coolant temperature gauge 63
Copyright 4
Cornering Brake Control (CBC) 21, 89
Cruise control 61
Curb weight 160
Current check indicator 20

D

Dashboard 16
Data
dimensions 159
engine 158
technical 158
weights 160
Daytime driving lamps 69
DBC (Dynamic Brake Control) 90
Deactivating the tilt alarm sensor and interior motion sensor 34
Deep water 87
Defrosting the windows 60, 75
Difficult steering 20, 94
Dimensions 159
Dipstick 111
Disc brakes 90
Displacement 158
Display lighting 69
Displays 18
Disposal
engine oil 113
used batteries 140
Door keys 30
Door warning lamp, bulb replacement 134
Doors
emergency actuation 32
mirrors 48
remote control 33
unlocking and locking 32
DOT Quality Grades 100
Draft-free ventilation 75
Drink holder 78, 80
Drive belts 162
Driving in winter 92
Driving notes 87
DSC (Dynamic Stability Control) 22, 65, 152
Dynamic Brake Control (DBC) 90
Dynamic Performance Control 66
Dynamic Stability Control (DSC) 22, 65, 152

E

Electric defrosting of mirrors 48
Electric power seats 45
Electric power windows 40
Electrical equipment failure 140
Electrical failure
convertible top 143
doors 32
fuel filler door 142
luggage compartment 142
passenger-side door 143
Electrical system 162
Electronic vehicle immobilizer 31
Emergency operation
convertible top 143
doors 32
fuel filler door 142
luggage compartment 142
passenger-side door 143
Emergency release from luggage compartment's interior 38
Engine
coolant 113, 161
data 158
output 158
speed 158
starting 56
switching off 57
Engine compartment 108
Engine oil 111
add 111
consumption 111
filling capacity 161
filter change 161
pressure indicator lamp 20
quality 112
specifications 112
viscosity 112
Engine oil level check 111
Equipment
options and accessories 5
Exit lamps, bulb replacement 134
Exterior finish 119
Exterior mirrors 48

CarManuals2.com

Everything from A to Z

F
Failure to start 146
Fault in ABS 89
Filler cap cover 25
Filling capacities 161
Filling the washer reservoir 161
First-aid kit 24
Fittings, tow-starting and towing 146
Flashlight 79
Flat tire 137
Flat Tire Monitor 67
Fog lamp, bulb replacement 133
"Follow me home" lamps 49, 69
Footbrake 90
Footwell lamps 71
bulb replacement 134
Front seat adjustment 45
Frost protection, radiator 113
Fuel 26
gauge 62
indicator 62
quality 26
Fuel filler door
manual release after electrical fault 142
Fuel injection system 158
Fuel tank capacity 161
Fuses 140

G
Gasoline 26
quality 26
Glove compartment 78
bulb replacement 135
Gross vehicle weight 160

H
Hand lamp 79
Handbrake 57
Hands-free system 81
Hardtop 96
Hazard warning flashers 24
Hazard warning triangle 24
Head restraint 46
Headlamp covers, care 117, 131
Headlamp flasher 70
Headlamp washer system 60, 110, 161
Headlamps 70
Headlight glare in rearview mirror 48
Heated mirrors 48
Heated seats 77
Heating and ventilation 72
Heating, rapid 77
Heavy loads 83
Height 159
High beams 23, 58, 70
Holder for beverage cans 80
Hood release 105
Horn 17
Hydraulic system 88, 92

I
Identification, tires 102
Ignition keys 30
Ignition lock 55
Imprint 4
Incoming-air mode 74
Indicator lamps 20
Inflation pressure 26, 99
monitoring 67
INSPECTION 63
Instrument cluster 18
Instrument panel lighting 69
Instruments 18
Interaxle tire rotation 101
Interface socket for Onboard Diagnostic 126
Interference
cellular phone 94
radio reception 95
Interior lamps 34, 71
bulb replacement 135
remote control 34
Interior motion sensor 39
deactivating 34
Interior rearview mirror with automatic dimmer 48, 154
Intermittent mode of wiper system 59

J
Jump-starting 145

K
Key Memory 49
Key with remote control 30
Keys 30

L
Lamps and bulbs 131
Leather care 122
Length 159
License plate lamp, bulb replacement 133
Light switch 69
Light-alloy wheels 104
Lighter 82
LIGHTS ON warning 69
Loading 83
Lock deicer 92
Louvers 72
Low beam headlamps 69

CarManuals2.com

Low traction road surfaces 93
Luggage compartment 37
bulb replacement 136
capacity 160
remote control 35
Luggage compartment lid 37
emergency release 37
emergency release from luggage compartment's interior 38

M

M+S tires 103
Maintenance 63, 116
Malfunction, ABS 89
Manual transmission 58
Map lamps 71
Microfilter 75
MIR (Multi-Information Radio) 64
Mirrors 48
Mobile phones 81, 94
Modifications, technical 6, 125
Multi-Information Radio (MIR) 64

N

Navigation system, refer to the radio Owner's Manual
Neckrest 46
Neon lamps 131

O

OBD interface socket 126
Odometer 62
Oil
additives 111
consumption 111
fill capacity 161
quality 112
specifications 112
viscosity 112
Oil change intervals, see the Service and Warranty Information Booklet (US models) or the Warranty and Service Guide Booklet (Canadian models)
Oil dipstick 111
Oil filter change 161
Oil level
check 111
indicator lamp 21
Oil pressure
indicator lamp 20
OILSERVICE 63
Onboard tool kit 130
Opening and closing
from the inside 36
from the outside 32
Operation in winter 92
Outlets, ventilation 72
Outside temperature display 64

P

Paint, care 119
Paintwork
minor repairs 120
waxing 120
Parking brake 57
Parking lamps 69, 70
bulb replacment 132
Parking, winter 94
Performance 158
Phone, refer to cellular phone 94
"Please fasten your safety belt" warning lamp 21
Pocket flashlight 79
Pollen 75
Power steering 94
Power windows 40
Pressure, tires 26, 99
monitoring 67

R

Radio 64, 94
refer also to the radio Owner's Manual
Radio reception 95, 151
Rapid heating 77
Reading lamps 71
Rear fog lamp 70
bulb replacement 133
Rear window defroster 60, 75
Rearview mirror 48
Recirculated-air mode 74
Refill washer reservoir 110
Refueling 25
Remaining fuel indicator 62
Remote control 33
Removing condensation from the windows 75
Removing the vehicle from storage 124
Replacement keys 30
Replacing fuses 140
Replacing lamps and bulbs 131
Replacing windshield wiper blades 130
Replenish washer fluid 110
Reporting Safety Defects 7

CarManuals2.com

Restraint systems 53
Return used
batteries 140
Reverse 17, 58
Roof load capacity 160
Rotating the tires 101
Rubber parts 93

S

Safety belt tensioners 153
Safety belts 50
Safety buttons 36
Safety tires 99
Seat adjustment 45
Seat heating 77
Securing cargo 83
Self-defrosting mirrors 48
Service Interval
Display 63, 116
Shelves 78, 79
Should 131
Side airbags 51
Side marker lamps 69
bulb
replacment 131, 132
Skid control 94
Slippery roads 93
Snow chains 93, 103, 104
Socket 82
for flashlights 82
for power supplies 82
for vacuum cleaners 82
Sound system, refer to the
separate Owner's Manual
Spare key 30
Spark plugs 162
Speaker 81
Specified engine oil 112
Speedometer 18
Starting 56
problems 87, 145
Steel wheels 104
Steering 94
Steering wheel lock 55
Stopping the vehicle 57
Storage areas 78, 79
Storing your vehicle 124
Stroke 158
Summer tires 102
Switching off the engine 57
Switching off the interior
motion sensor 39
Switching off the tilt alarm
sensor 39
Symbols 4, 138

T

Tachometer 62
Tail lamps 132
bulb replacment 132
Tank capacity 161
Technical data 158
Technical
modifications 6, 125
Telephone 81
Temperature display
outside temperature 64
Temperature gauge
engine coolant 63
Temperature
selection 74, 75
Tilt alarm 34
Tilt alarm sensor 39
Tire codes 102
Tire damage 99
Tire inflation
pressure 26, 99
Tire pressure monitor 67
Tire replacement 100, 101
Tire rotation 101
Tire specifications 104
Tire tread 99
Tools 130
Torque 158
Tow fittings 146
Towing the vehicle 146
Tow-starting 146
Track 159
Traction Control System
refer to DSC 65
Transmission 58
Transmitter key 30
Tread depth, tires 99
Trip odometer 62
Trunk lid, refer to luggage
compartment lid 37
Turn signal indicator 23, 59
Turning circle 159

U

Uniform Tire Quality
Grading 101
Unusually high steering
effort 20, 94
Use antifreeze 114
radiator 114
Used batteries,
disposal 140

V

Vacuum cleaner 82
Vehicle battery 138, 162
Vehicle care
exterior 119
interior 121
Vehicle equipment
options and accessories 5
Vehicle Identification
Number (VIN) 115
Vehicle immobilizer 31
Vehicle painting 119
Vehicle storage 124
Vehicle weight 160
Vehicle, starting 56
Vehicle, stopping 57
Ventilation 72
draft-free 75
Vinyl upholstery, care 121

CarManuals2.com

W

Warning lamps 20
Washer nozzles,
adjusting 110
Washer reservoir,
filling 110
Washing your car 117
Water on roadways 87
Waxing, paintwork 120
Wear indicator in the
tires 99
Weights 160
Wheel rims 102
Wheelbase 159
Wheels and tires 102, 104
Width 159
Wind deflector 95
Windows
comfort use 32
remote control 34
Windshield washer nozzles,
adjustment 110
Windshield washer reservoir,
filling 110
Windshield wipers 59
blade replacement 130
Winter operation 92
Winter tires 102, 103
Wiper system 59
blade replacement 130
Working in the engine
compartment 105

X

Xenon lamps 131, 155

CarManuals2.com

Refueling

BMW recommends Castrol

To ensure that you always have convenient access to all essential information when you stop for fuel, we recommend that you take the time to fill out the adjoining chart by entering the data that apply to your vehicle.
Consult the index for individual specifications.

Fuel

Designation	

Please enter your preferred fuel here.

Engine oil

Quality	

The space between the two marks on the dipstick corresponds to approx. 1.1 US quarts (1 liter).

Tire inflation pressure	Summer tires		Winter tires	
	front	rear	front	rear
2 passengers				

CarManuals2.com

More about BMW

bmwusa.com

The Ultimate
Driving Machine

01 41 0 156 337 ue

CarManuals2.com

Online Edition for Part No. 01 41 0 156 337 - © 09/01 BMW AG

CarManuals2.com