Zoom-Zoom

All children instinctively know it.

A few adults still remember it.

One unique car company refuses to outgrow it.

In grown-up language, it means the exhilaration and

liberation that come from experiencing sheer motion.

But as usual, children put it much better and simply call it " Go Zoom-Zoom."

We practice it every day.

It's why we build the kind of cars we do.

Zoom-Zoom.

Can we re-awaken it in you today?

A Word to Mazda Owners

Thank you for choosing a Mazda. We at Mazda design and build vehicles with complete customer satisfaction in mind.

To help ensure enjoyable and trouble-free operation of your Mazda, read this manual carefully and follow its recommendations.

An Authorized Mazda Dealer knows your vehicle best. So when maintenance or service is necessary, that's the place to go.

Our nationwide network of Mazda professionals is dedicated to providing you with the best possible service.

We assure you that all of us at Mazda have an ongoing interest in your motoring pleasure and in your full satisfaction with your Mazda product.

Mazda Motor Corporation
HIROSHIMA, JAPAN

Important Notes About This Manual
Keep this manual in the glove box as a handy reference for the safe and enjoyable use of your Mazda. Should you resell the vehicle, leave this manual with it for the next owner.

All specifications and descriptions are accurate at the time of printing. Because improvement is a constant goal at Mazda, we reserve the right to make changes in specifications at any time without notice and without obligation.

Air Conditioning and the Environment
Your Mazda's genuine air conditioner is filled with a refrigerant that has been found not to damage the earth's ozone layer. If the air conditioner does not operate properly, consult an Authorized Mazda Dealer.

Perchlorate
Certain components of this vehicle such as [air bag modules, seat belt pretensioners, lithium batteries, ···] may contain Perchlorate Material- - Special handling may apply for service or vehicle end of life disposal. See
www.dtsc.ca.gov/hazardouswaste/perchlorate.

Please be aware that this manual applies to all models, equipment and options. As a result, you may find some explanations for equipment not installed on your vehicle.

©2014 Mazda Motor Corporation
Printed in Japan Apr. 2015 (Print3)

How to Use This Manual

We want to help you get the most driving pleasure from your vehicle. Your owner's manual, when read from cover to cover, can do that in many ways.

Illustrations complement the words of the manual to best explain how to enjoy your Mazda. By reading your manual, you can find out about the features, important safety information, and driving under various road conditions.

The symbol below in this manual means “Do not do this” or “Do not let this happen”.

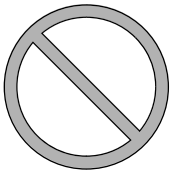

Index: A good place to start is the Index, an alphabetical listing of all information in your manual.

You'll find several WARNINGs, CAUTIONs, and NOTEs in the manual.

⚠ WARNING

A WARNING indicates a situation in which serious injury or death could result if the warning is ignored.

⚠ CAUTION

A CAUTION indicates a situation in which bodily injury or damage to your vehicle, or both, could result if the caution is ignored.

NOTE

A NOTE provides information and sometimes suggests how to make better use of your vehicle.

The symbol below, located on some parts of the vehicle, indicates that this manual contains information related to the part. Please refer to the manual for a detailed explanation.

Table of Contents

Your Vehicle at a Glance 1
Interior, exterior views and part identification of your Mazda.

Essential Safety Equipment 2
Use of safety equipment, including seats, seat belt system, child-restraint systems and SRS air bags.

Knowing Your Mazda 3
Explanation of basic operations and controls; opening/closing and adjustment of various parts.

Before Driving Your Mazda 4
Important information about driving your Mazda.

Driving Your Mazda 5
Explanation of instruments and controls.

Interior Comfort 6
Use of various features for drive comfort, including air-conditioning and audio system.

In Case of an Emergency 7
Helpful information on what to do in an emergency.

Maintenance and Care 8
How to keep your Mazda in top condition.

Customer Information and Reporting Safety Defects 9
Important consumer information including warranties and add-on equipment.

Specifications 10
Technical information about your Mazda.

Index 11

1 Your Vehicle at a Glance

Interior, exterior views and part identification of your Mazda.

Interior Overview **1-2**
Interior Equipment (View A) 1-2
Interior Equipment (View B) 1-3
Interior Equipment (View C) 1-4

Exterior Overview **1-5**
Front 1-5
Rear 1-6

Interior Overview

Interior Equipment (View A)

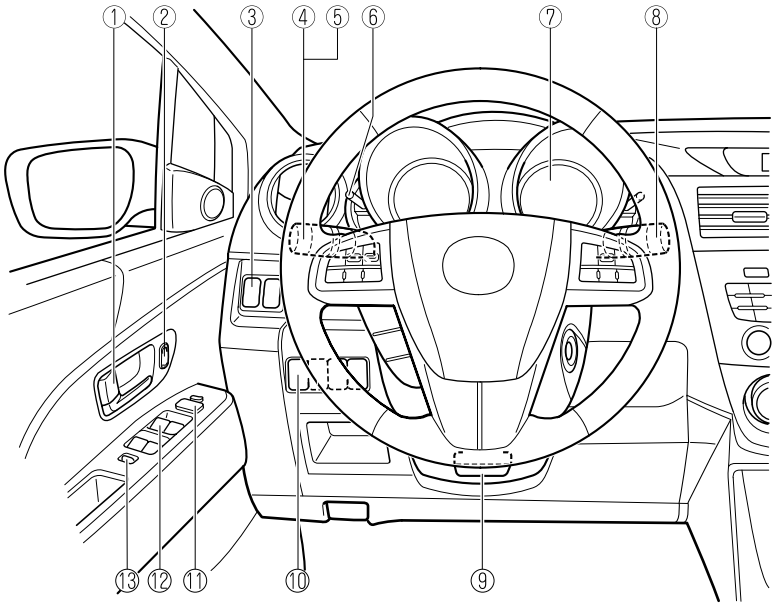

① Door-lock knob ..... page 3-10
② Power door lock switch ..... page 3-11
③ DSC OFF switch ..... page 5-26
④ Lighting control ..... page 5-59
⑤ Turn and lane-change signal ..... page 5-63
⑥ Dashboard illumination knob ..... page 5-43
⑦ Instrument cluster ..... page 5-40
⑧ Wiper and washer lever ..... page 5-64
⑨ Lock release lever ..... page 3-32
⑩ Headlight leveling switch ..... page 5-62
⑪ Outside mirror switch ..... page 3-32
⑫ Power window switches ..... page 3-17
⑬ Power window lock switch ..... page 3-19

Interior Equipment (View B)

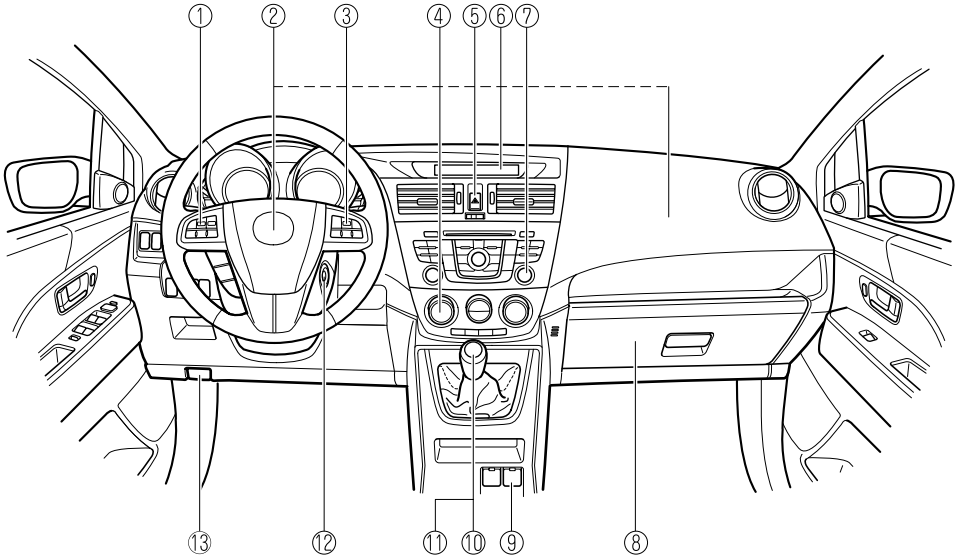

① Audio control switches ..... page 6-47
② SRS air bags ..... page 2-46
③ Cruise control switches ..... page 5-21
④ Climate control system ..... page 6-2
⑤ Hazard warning flasher switch ..... page 5-70
⑥ Information display ..... page 6-95
⑦ Audio system ..... page 6-12
⑧ Glove compartment ..... page 6-104
⑨ Accessory socket ..... page 6-109
⑩ Manual transaxle shift lever ..... page 5-10
⑪ Automatic transaxle selector lever ..... page 5-12
⑫ Ignition switch ..... page 5-2
⑬ Hood release handle ..... page 3-21

The equipment and installation position varies by vehicle

Interior Overview

Interior Equipment (View C)

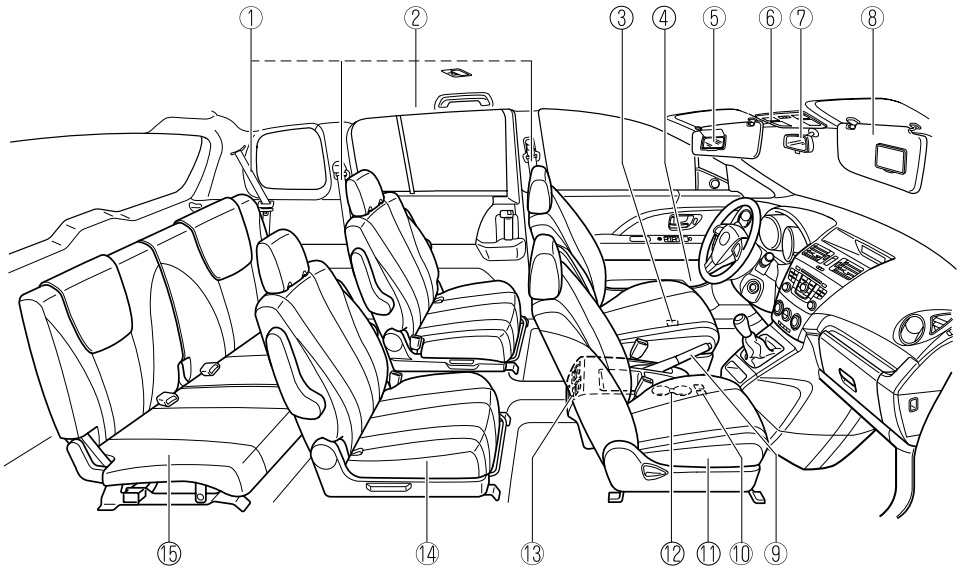

① Seat belts ..... page 2-18
② SRS air bags ..... page 2-46
③ Remote fuel-filler lid release ..... page 3-20
④ Bottle holder ..... page 6-101
⑤ Vanity mirror ..... page 6-93
⑥ Overhead light ..... page 6-94
⑦ Rearview mirror ..... page 3-33
⑧ Sunvisor ..... page 6-93
⑨ Parking brake ..... page 5-6
⑩ Seat warmer switches ..... page 2-16
⑪ Front seat ..... page 2-2
⑫ Cup holders ..... page 6-100
⑬ Rear ventilation system ..... page 6-9
⑭ Second-row seat ..... page 2-5
⑮ Third-row seat ..... page 2-10

Exterior Overview

Front

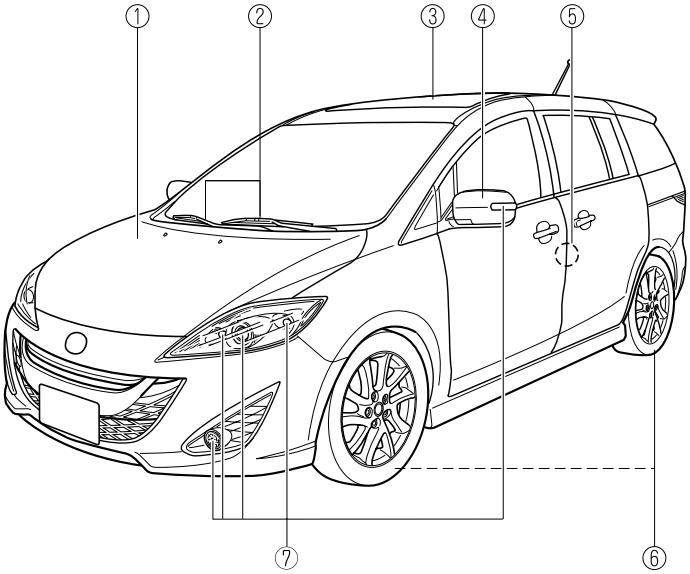

① Hood ..... page 3-21
② Windshield wiper blades ..... page 8-28
③ Moonroof ..... page 3-23
④ Outside mirror ..... page 3-32
⑤ Child safety locks ..... page 3-13
⑥ Tires ..... page 8-36
⑦ Light bulbs ..... page 8-42

Exterior Overview

Rear

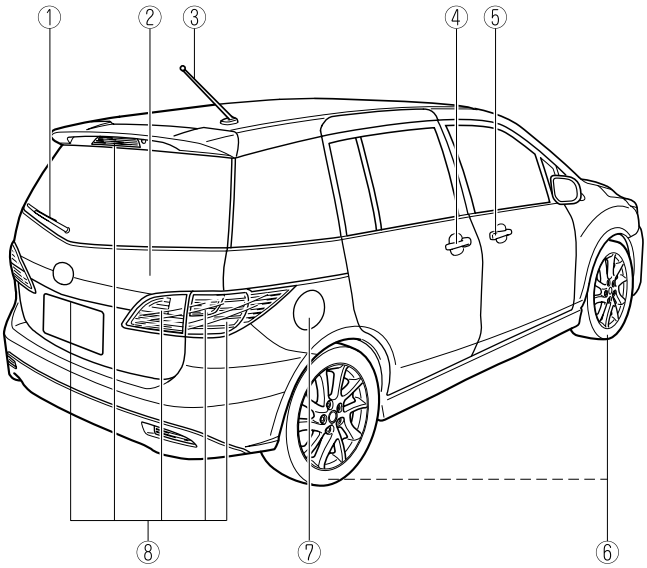

① Rear wiper blade ..... page 8-29
② Liftgate ..... page 3-14
③ Antenna ..... page 6-11
④ Sliding doors ..... page 3-12
⑤ Door lock ..... page 3-10
⑥ Tires ..... page 8-36
⑦ Fuel-filler lid ..... page 3-20
⑧ Light bulbs ..... page 8-42

2 Essential Safety Equipment

Use of safety equipment, including seats, seat belt system, child-restraint systems and SRS air bags.

Seats 2-2
Front Seats 2-2
Second-Row Seats 2-5
Third-Row Seat 2-10
Seat Arrangements 2-12
Head Restraints 2-14
Seat Warmer* 2-16

Seat Belt Systems 2-18
Seat Belt Precautions 2-18
Seat Belt 2-22
Front Seat Belt Pretensioner and Load Limiting Systems 2-24
Seat Belt Extender 2-27
Seat Belt Warning Light 2-28
Seat Belt Reminder 2-29

Child Restraint 2-30
Child Restraint Precautions 2-30
Child-Restraint System Installation Position 2-35
Installing Child-Restraint Systems 2-36
LATCH Child-Restraint Systems 2-43

SRS Air Bags 2-46
Supplemental Restraint System (SRS) Precautions 2-46
Supplemental Restraint System Components 2-52
How the SRS Air Bags Work 2-54
SRS Air Bag Deployment Criteria 2-58
Limitations to SRS Air Bag 2-59
Driver and Front Passenger Occupant Classification System* 2-61
Monitoring and Maintenance 2-66

*Some models.

Front Seats

⚠ WARNING

Do not modify or replace the front seats:

Modifying or replacing the front seats such as replacing the upholstery or loosening any bolts is dangerous. The front seats contain air bag components essential to the supplemental restraint system. Such modifications could damage the supplemental restraint system and result in serious injury. Consult an Authorized Mazda Dealer if there is any need to remove or reinstall the front seats.

Do not drive with damaged front seats:

Driving with damaged front seats is dangerous. A collision, even one not strong enough to inflate the air bags, could damage the front seats which contain essential air bag components. If there was a subsequent collision, an air bag may not deploy which could lead to injuries. Always have an Authorized Mazda Dealer inspect the front seats, front seat belt pretensioners and air bags after a collision.

Make sure the adjustable components of a seat are locked in place:

Adjustable seats and seatbacks that are not securely locked are dangerous. In a sudden stop or collision, the seat or seatback could move, causing injury. Make sure the adjustable components of the seat are locked in place by attempting to slide the seat forward and backward and rocking the seatback.

Never allow children to adjust a seat:

Allowing children to adjust a seat is dangerous as it could result in serious injury if a child's hands or feet become caught in the seat.

Adjust the driver's seat only when the vehicle is stopped:

Adjusting the driver's seat while the vehicle is moving is dangerous. The driver could lose control of the vehicle and have an accident.

⚠ CAUTION

Be careful not to place your hands and fingers around moving parts of the front seat when adjusting the seat positions to prevent injury.

▼Seat Slide

To move a seat forward or backward, raise the lever and slide the seat to the desired position and release the lever.

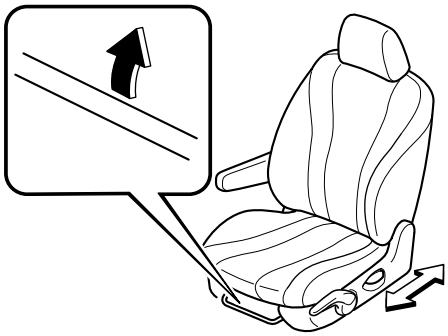

Make sure the lever returns to its original position and the seat is locked in place by attempting to push it forward and backward.

▼Seat Recline

WARNING

Do not drive with either front seat reclined:

Sitting in a reclined position while the vehicle is moving is dangerous because you do not get the full protection from seat belts. During sudden braking or a collision, you can slide under the lap belt and suffer serious internal injuries. For maximum protection, sit well back and upright.

Always sit in the front passenger seat properly with the seatback upright and feet on the floor (With Driver and Front Passenger Occupant Classification System):

Your front passenger seat has weight sensors, sitting in the front passenger seat improperly out of position or with the seatback reclined too far while the vehicle is moving is dangerous as it can take off weight from the seat bottom and affect the weight determination of the front passenger sensing system. As a result the front passenger will not have the supplementary protection of the air bag and seat belt pretensioner, which could result in serious injury. Always sit upright against the seatback with your feet on the floor.

Do not drive with the seatback unlocked:

All of the seatbacks play an important role in your protection in a vehicle. Leaving the seatback unlocked is dangerous as it can allow passengers to be ejected or thrown around and baggage to strike occupants in a sudden stop or collision, resulting in severe injury. After adjusting the seatback at any time, even when there are no other passengers, rock the seatback to make sure it is locked in place.

To change the seatback angle, lean forward slightly while raising the lever. Then lean back to the desired position and release the lever.

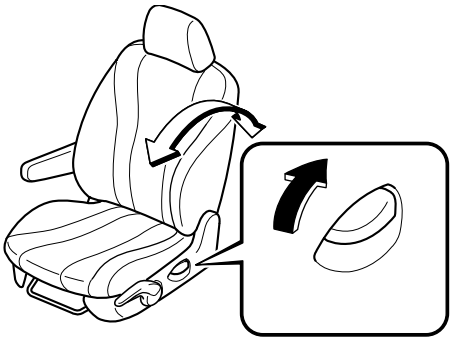

Make sure the lever returns to its original position and the seatback is locked in place by attempting to push it forward and backward.

CAUTION

When returning a rear-reclined seatback to its upright position, make sure you hold onto the seatback with your other hand while operating the lever. If the seatback is not supported, it will flip forward suddenly and could cause injury.

▼Height Adjustment (Driver's Seat)

To adjust the seat height, move the lever up or down.

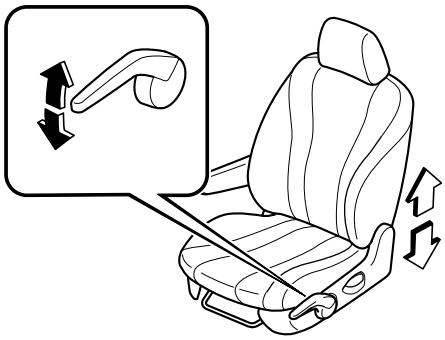

▼Lumbar Support Adjustment (Driver's Seat)*

Move the lever forwards to adjust the lumbar support as required.

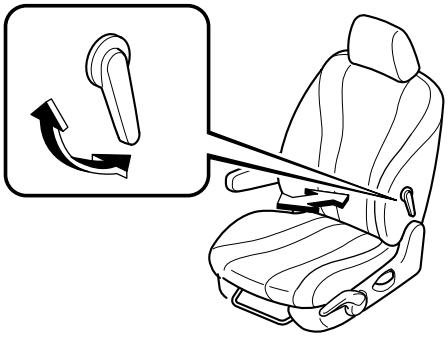

▼Armrest

The armrest can be used or placed upright.

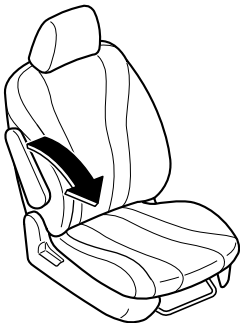

WARNING

Never position the shoulder portion of a front seat belt over the armrest:

Positioning the shoulder portion of a front seat belt over the armrest is dangerous as it cannot provide adequate protection in a collision and could result in serious injuries.

Never put your hands and fingers around the moving parts of the seat and armrest:

Putting your hands and fingers around the moving parts of the seat and armrest is dangerous as they could get injured.

*Some models.

Second-Row Seats

WARNING

Do not stack cargo higher than the seatbacks:

Stacking luggage or other cargo higher than the seatbacks is dangerous. During a sudden stop or collision, objects can fly around and become projectiles that could hit and injure passengers.

Make sure luggage and cargo are secured before driving:

Not securing cargo while driving is dangerous as it could move or be crushed during sudden braking or a collision and cause injury.

Make sure the adjustable components of a seat are locked in place by attempting to slide the seat forward and backward and rocking the seatback:

Adjustable seats that are not securely latched are dangerous. In a sudden stop or collision, the seat or seatback could move, causing injury.

Never allow children to adjust a seat:

Allowing children to adjust a seat is dangerous as it could result in serious injury if a child's hands or feet become caught in the seat.

Adjust the seat only when the vehicle is stopped:

Adjusting the seat while the vehicle is moving is dangerous. Sudden braking or a collision could cause serious injury.

Do not drive with the seatback unlocked:

All of the seatbacks play an important role in your protection in a vehicle. Leaving the seatback unlocked is dangerous as it can allow passengers to be ejected or thrown around and baggage to strike occupants in a sudden stop or collision, resulting in severe injury. After adjusting the seatback at any time, even when there are no other passengers, rock the seatback to make sure it is locked in place.

Never allow a passenger to sit or stand on the folded seatback while the vehicle is moving:

Driving with a passenger on the folded seatback is dangerous. Allowing a child to sit up on the folded seatback while the vehicle is moving is particularly dangerous. In a sudden stop or even a minor collision, a child not in a proper seat or child-restraint system and seat belt could be thrown forward, back or even out of the vehicle resulting in serious injuries or death. The child in the baggage area could be thrown into other occupants and cause serious injury.

CAUTION

Be careful not to place your hands and fingers around moving parts of the second-row seat when adjusting the seat positions to prevent injury.

NOTE

The second-row seats cannot be removed.

Seats

▼Seat Slide

To move the seat forward or backward, raise the lever and slide the seat to the desired position and release the lever.

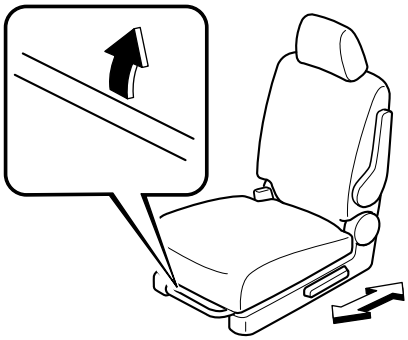

Make sure the lever returns to its original position and the seat is locked in place by attempting to push it forward and backward.

▼Seat Recline

⚠ WARNING

Do not drive with the seats reclined:
Sitting in a reclined position while the vehicle is moving is dangerous because you do not get the full protection from the seat belts. During sudden braking or a collision, you can slide under the lap belt and suffer serious internal injuries. For maximum protection, sit well back and upright.

Do not recline a second-row seatback when the third row seat is occupied:
Reclining the second-row seatback when the third-row seat is occupied is dangerous.Because the clearance in the third-row seat is limited, occupants in the third-row seat could be hurt seriously on a reclined second-row seatback.

To change the seatback angle, lean forward slightly while raising the lever. Then lean back to the desired position and release the lever.

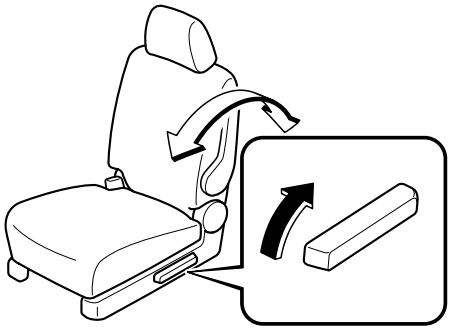

Make sure the lever returns to its original position and the seatback is locked in place by attempting to push it forward and backward.

CAUTION

When returning a rear-reclined seatback to its upright position, make sure you hold onto the seatback with your other hand while operating the lever. If the seatback is not supported, it will flip forward suddenly and could cause injury.

▼Armrest

The armrest can be used or placed upright.

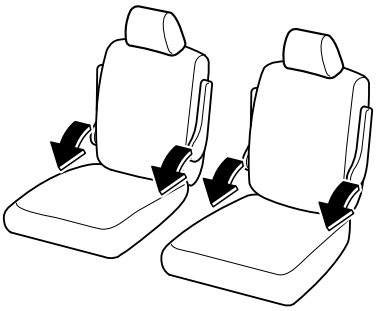

WARNING

Never position the shoulder portion of a second-row seat belt over the armrest:

Positioning the shoulder portion of a second-row seat belt over the armrest is dangerous as it cannot provide adequate protection in a collision and could result in serious injuries.

Never put your hands and fingers around the moving parts of the seat and armrest:

Putting your hands and fingers around the moving parts of the seat and armrest is dangerous as they could get injured.

▼Third-Row Seat Access

After folding the second-row seat seatback and sliding the seat forward, you can access the third-row seat easily.

Entering/exiting the third-row seat area

Raise the lever on the side of the second-row seat or pull the strap behind the second-row seat to fold the seatback forward and slide the seat forward.

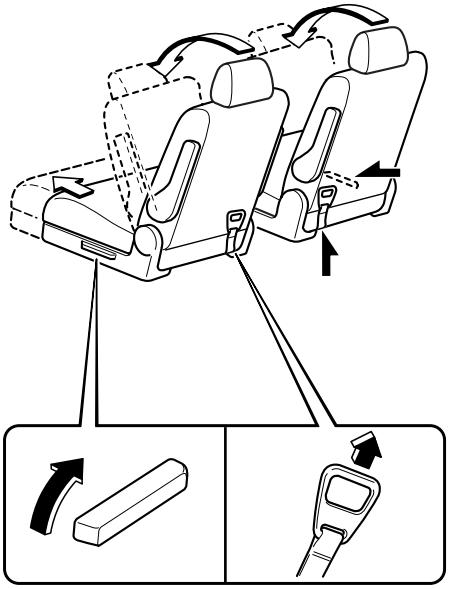

After entering/exiting the third-row seat area

Return the second-row seatback to its upright position and lock it after sliding it backward. Make sure it is locked by attempting to lightly move it forward and backward.

⚠ CAUTION

- *When folding a seatback, always hold onto the seatback with your other hand while operating the lever. If the seatback is not supported, it will flip forward suddenly and could cause injury.*
- *After entering/exiting the third-row seat area, return the seatback to its upright position. Otherwise, it could move unexpectedly and cause injury.*

▼Folding the Second-Row Seats

To create a flat luggage compartment space, lift the seat-bottoms of the second-row seats and fold the seatbacks forward.

Folding the seatbacks

1. Insert the second-row outboard seat belts in the retainers.

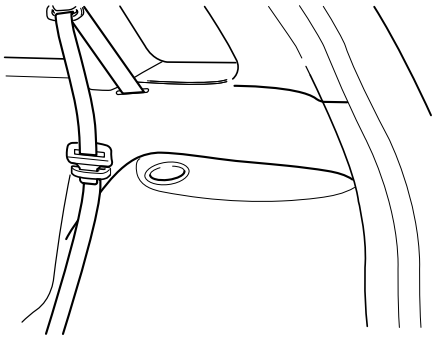

2. Move the seat all the way back.
3. Fold the head restraint all the way down (page 2-14).
4. Pull the strap and lift the end of the seat-bottom up and forward.

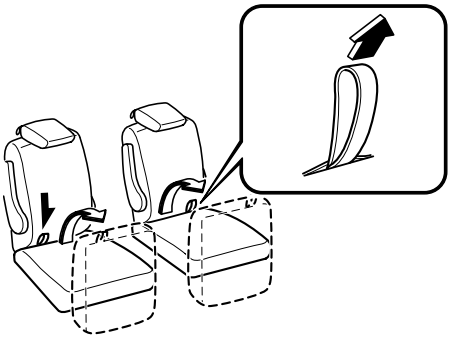

5. If the armrest and storage box are in the position for use, store them. Refer to Storage Box on page 6-105.
6. Raise the lever and fold the seatback forward. Make sure the seatback is secured by attempting to lightly move it up and down.

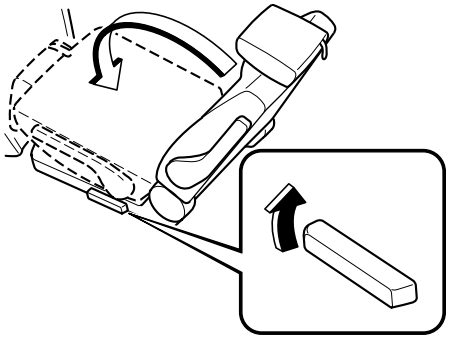

CAUTION

- *When folding a seatback, always hold onto the seatback with your other hand while operating the lever. If the seatback is not supported, it will flip forward suddenly and could cause injury.*
- *When folding the seatback of the right second-row seat, make sure the storage box is stowed. If the storage box is not stowed, it could be damaged.*

NOTE

To create a flat luggage compartment space from the rear of the vehicle to the back of the front seats, fold the second-row and third-row seats (page 2-10).

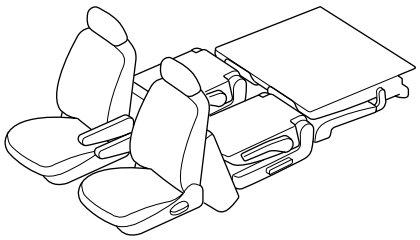

Returning seatbacks to their original positions

1. Return the seatback to its original position while raising its lever.
   Make sure the seatback is secured by attempting to lightly move it forward and back.

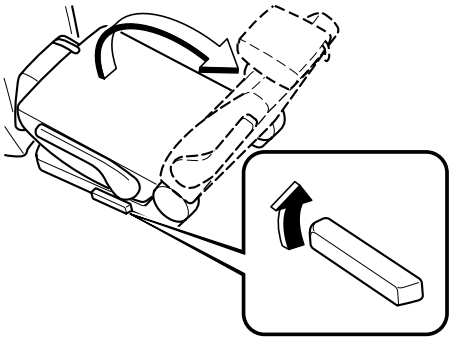

2. Return the seat-bottom to its original position and secure it. After returning the seat-bottom to its original position, make sure the seat-bottom is secured by attempting to lightly move it up and down.
3. Lift the head restraint upward to its upright position.

Third-Row Seat

⚠ WARNING

Do not stack cargo higher than the seatbacks:

Stacking luggage or other cargo higher than the seatbacks is dangerous. During a sudden stop or collision, objects can fly around and become projectiles that could hit and injure passengers.

Make sure luggage and cargo are secured before driving:

Not securing cargo while driving is dangerous as it could move or be crushed during sudden braking or a collision and cause injury.

Do not drive with the seatback unlocked:

All of the seatbacks play an important role in your protection in a vehicle. Leaving the seatback unlocked is dangerous as it can allow passengers to be ejected or thrown around and baggage to strike occupants in a sudden stop or collision, resulting in severe injury. After returning the seatback at any time, even when there are no other passengers, rock the seatback to make sure it is locked in place.

Never allow a passenger to sit or stand on the folded seatback while the vehicle is moving:

Driving with a passenger on the folded seatback is dangerous. Allowing a child to sit up on the folded seatback while the vehicle is moving is particularly dangerous. In a sudden stop or even a minor collision, a child not in a proper seat or child-restraint system and seat belt could be thrown forward, back or even out of the vehicle resulting in serious injuries or death. The child in the baggage area could be thrown into other occupants and cause serious injury.

NOTE

The third-row seat cannot be removed.

▼Folding the Third-Row Seat

To create a flat luggage compartment space, fold the seatbacks forward.

To fold third-row seat

1. Slide the second-row seat all the way forward.
2. Insert the third-row outboard seat belts in the retainers.

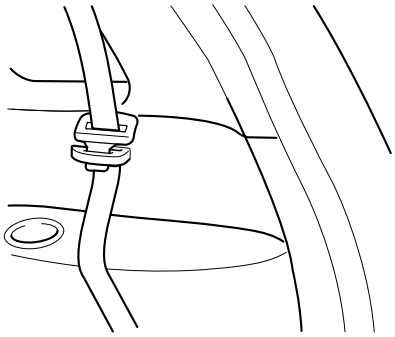

3. Lower the head restraints all the way down (page 2-14).
4. Pull the strap and fold the seatback forward.

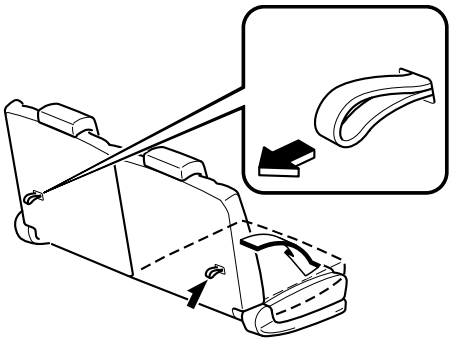

5. Lock the seatback in place by pushing it down. Make sure the seatback is secured by attempting to lightly move it up and down.

NOTE
To create a flat luggage compartment space from the rear of the vehicle to the back of the front seats, fold the second-row and third-row seats (page 2-8).

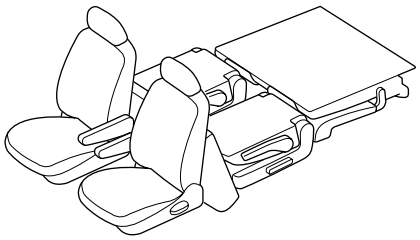

To return third-row seat to its original position

Return the seatback to its original position while pulling its strap.

Make sure the seatback is secured by attempting to lightly move it forward and back.

Seat Arrangements

Illustrations are of representative seat arrangements.

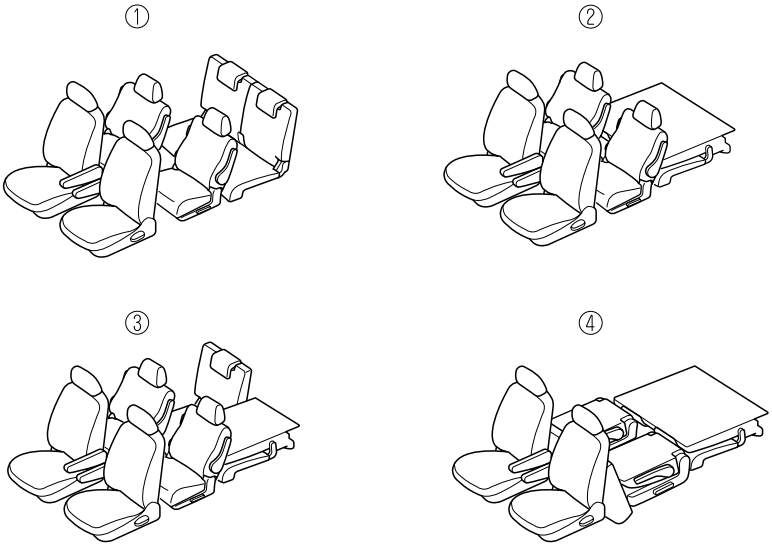

WARNING

Do not arrange the seats while driving:

Arranging the seats while driving is dangerous because you do not get the full protection from seat belts and you cannot keep your balance. During sudden braking or a collision, it could cause serious injuries.

Do not ride on seatbacks that are folded flat:

Sitting or lying on seats that are folded flat is a dangerous way to ride. During sudden braking or a collision you could be thrown around inside the vehicle and seriously injured.

Make sure the adjustable components of a seat are locked in place:

Adjustable seats that are not securely locked are dangerous. In a sudden stop or collision, the seat or seatback could move, causing injury.

CAUTION

- *Be careful not to place your hands and fingers around moving parts of the seat when arranging the seat to prevent injury.*
- *Do not move around in the vehicle while the seats are folded down. A foot could be injured if it becomes pinched between the seat bottom and seatback. If you have to move around the folded down seats, step on the center of the seats and move carefully.*

▼How to arrange the seats

①

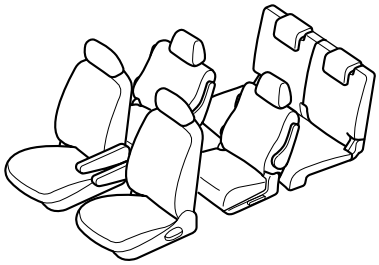

Slide the second-row seats (driver side/passenger side) all the way back.
Refer to Seat Slide on page 2-6.

②/③

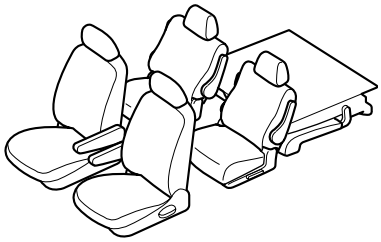

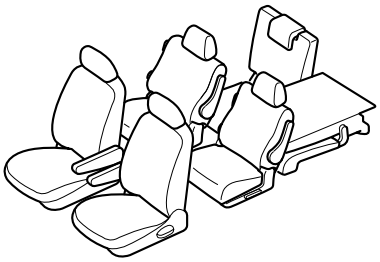

Fold the third-row seats.
Refer to Folding the Third-Row Seat on page 2-10.
To return the seats to their road positions, reverse the procedures above.

④

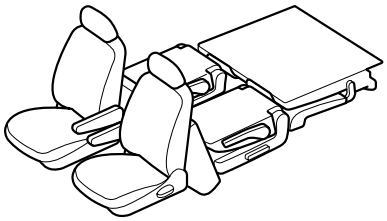

1. Fold the third-row seats.
   Refer to Folding the Third-Row Seat on page 2-10.

2. Fold the second-row seats.
   Refer to Folding the Second-Row Seats on page 2-8.

To return the seats to their road positions, reverse the procedures above.

Head Restraints

Your vehicle is equipped with head restraints on all outboard seats. The head restraints are intended to help protect you and the passengers from neck injury.

WARNING

Always drive with the head restraints installed when seats are being used and make sure they are properly adjusted. In addition, always raise the head restraints mentioned below when they are being used:

Driving with the head restraints adjusted too low or removed is dangerous. With no support behind your head, your neck could be seriously injured in a collision.

(Head restraints which must be raised for use)
All third-row seat head restraints

▼Normal Head Restraints

Height adjustment

To raise a head restraint, pull it up to the desired position.
To lower the head restraint, press the stop-catch release, then push the head restraint down.
Adjust the head restraint so that the center is even with the top of the passenger's ears.

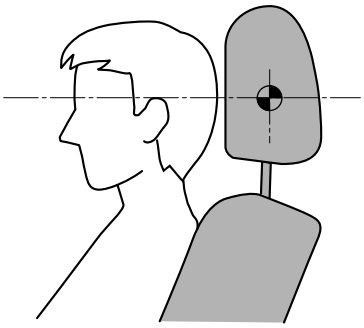

Front outboard seat

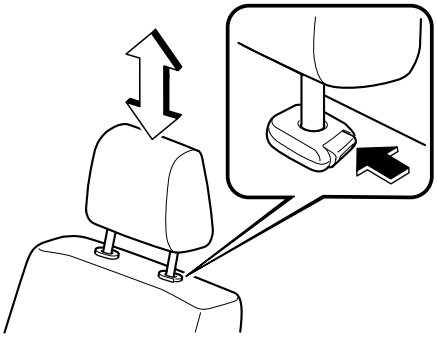

Third-Row outboard seat

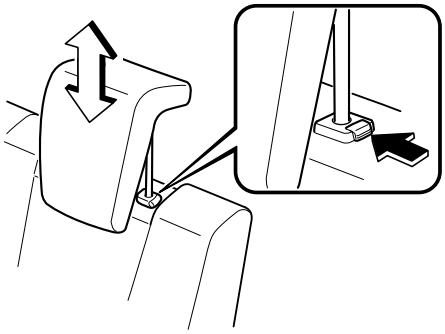

Removal/Installation

To remove the head restraint, pull it up while pressing the stop-catch.
To install the head restraint, insert the legs into the holes while pressing the stop-catch.

⚠ WARNING

Always drive with the head restraints set up when seats are being used and make sure they are properly set up:

Driving with the head restraints not set up is dangerous. With no support behind your head, your neck could be seriously injured in a collision.

▼Foldable Head Restraints

The second-row seats are equipped with foldable head restraints.

NOTE

The foldable head restraints cannot be adjusted or removed.

To fold the head restraint, pull the strap and fold the head restraint downward. To return the head restraint to its upright position, lift it upward.

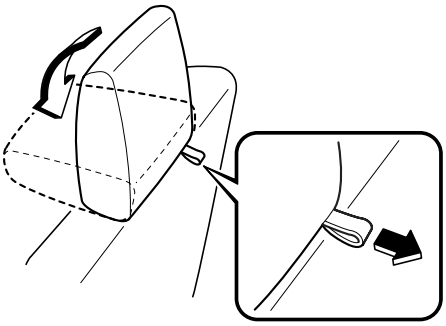

WARNING

Always drive with the head restraints in their upright positions when the second-row seats are occupied, and make sure they are securely locked in place:

Driving with the head restraints folded down is dangerous. With no support behind your head, your neck could be seriously injured in a collision.

Seat Warmer*

The front seats are electrically heated. The ignition must be switched ON.

Press the switch to turn the seat warmer on or off. When the switch is in the ON position, the indicator light will come on.

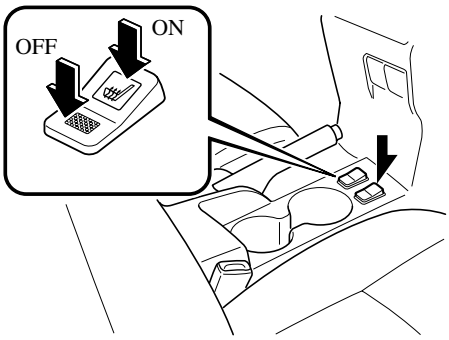

 *Some models.

WARNING

- *Be careful when using the seat warmer. The heat from the seat warmer may be too hot for some people, as indicated below, and could cause a low-temperature burn.*
  - *Infants, small babies, elderly people, and physically challenged people*
  - *People with delicate skin*
  - *People who are excessively fatigued*
  - *People who are intoxicated*
  - *People who have taken sleep-inducing medicine such as sleeping pills or cold medicine*
- *Do not use the seat warmer with anything having high moisture-retention ability such as a blanket or cushion on the seat. The seat may be heated excessively and cause a low-temperature burn.*
- *Do not use the seat warmer even when taking a short nap in the vehicle. The seat may be heated excessively and cause a low-temperature burn.*
- *Do not place heavy objects with sharp projections on the seat, or insert needles or pins into it. This could cause the seat to become excessively heated and result in injury from a minor burn.*

CAUTION

Do not use organic solvents to clean the seat. It may damage the seat surface and the heater.

NOTE

- *Use the seat warmer when the engine is running, and do not continue to use it for a long period of time.*
- *The temperature of the seat warmer cannot be adjusted because the seat warmer is controlled by a thermostat.*

Seat Belt Precautions

Seat belts help to decrease the possibility of severe injury during accidents and sudden stops. Mazda recommends that the driver and all passengers always wear seat belts.

Your vehicle has the following types of seat belts.

With Driver and Front Passenger Occupant Classification System model

Seating Position		Types of seat belt
Front seat	Driver side	3-point type seat belt with emergency locking mode retractor
	Passenger side	3-point type seat belt with emergency locking mode retractor/automatic locking mode retractor
Second-row seat		
Third-row seat		

Except above

Seating Position		Types of seat belt
Front seat	Driver side	3-point type seat belt with emergency looking mode retractor
	Passenger side	
Second-row seat		3-point type seat belt with emergency looking mode retractor/automatic locking mode retractor
Third-row seat		

3-point type seat belt with emergency locking mode retractor
This belt has retractors with an inertia lock that keep the belt retracted when not in use. The lock allows the belt to remain comfortable on the user, but it will lock in position during a collision.
Refer to Emergency Locking Mode on page 2-20.
3-point type seat belt with emergency locking mode retractor/automatic locking mode retractor
In addition to the emergency locking mode function, this belt has retractors that operate in another mode, the automatic locking mode, for the child-restraint system.
Refer to Automatic Locking Mode on page 2-21.
Refer to Installing Child-Restraint Systems on page 2-36.
We recommend you put all children in the rear seats, if you must use the front passenger seat for a child, slide the front passenger seat as far back as possible and make sure any child-restraint system is secured properly.

WARNING

Always wear your seat belt and make sure all occupants are properly restrained:
Not wearing a seat belt is extremely dangerous. During a collision, occupants not wearing seat belts could hit someone or things inside the vehicle or even be thrown out of the vehicle. They could be seriously injured or even killed. In the same collision, occupants wearing seat belts would be much safer.

Do not wear twisted seat belts:
Twisted seat belts are dangerous. In a collision, the full width of the belt is not available to absorb the impact. This puts more force on the bones beneath the belt, which could cause serious injury or death. So, if your seat belt is twisted, you must straighten the seat belt to remove any twists and to allow the full width of the belt to be used.

Never use one seat belt on more than one person at a time:
Using one seat belt for more than one person at a time is dangerous. A seat belt used in this way cannot spread the impact forces properly and the two passengers could be crushed together and seriously injured or even killed. Never use one belt for more than one person at a time and always operate the vehicle with each occupant properly restrained.

Do not operate a vehicle with a damaged seat belt:
Using a damaged seat belt is dangerous. An accident could damage the belt webbing of the seat belt in use. A damaged seat belt cannot provide adequate protection in a collision. Have an Authorized Mazda Dealer inspect all seat belt systems in use during an accident before they are used again.

Have your seat belts changed immediately if the pretensioner or load limiter has been expended:
Always have an Authorized Mazda Dealer immediately inspect the front seat belt pretensioners and air bags after any collision. Like the air bags, the front seat belt pretensioners and load limiters will only function once and must be replaced after any collision that caused them to deploy. A seat belt with an expended pretensioner or load limiter is still better than wearing no seat belt at all; however, if the front seat belt pretensioners and load limiters are not replaced, the risk of injury in a collision will increase.

CAUTION

Belt retraction may become difficult if the belts and rings are soiled, so try to keep them clean. For more details about cleaning the seat belts, refer to "Cleaning the Lap/Shoulder Belt Webbing" (page 8-65).

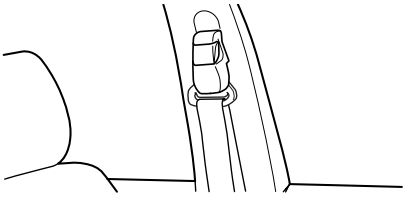

▼Pregnant Women and Persons with Serious Medical Conditions

Pregnant women should always wear seat belts. Ask your doctor for specific recommendations.
The lap belt should be worn SNUGLY AND AS LOW AS POSSIBLE OVER THE HIPS. The shoulder belt should be worn across your shoulder properly, but never across the stomach area.
Persons with serious medical conditions also should wear seat belts. Check with your doctor for any special instructions regarding specific medical conditions.

▼Emergency Locking Mode

In the emergency locking mode, the belt remains comfortable on the occupant and the retractor will lock in position during a collision. When the seat belt is fastened, it will always be in the emergency locking mode until it is switched to automatic locking mode by pulling it all the way out to its full length. If the belt feels tight and hinders comfortable movement while the vehicle is stopped or in motion, it may be in the automatic locking mode because the belt has been pulled too far out. To return the belt to the more comfortable emergency locking mode, wait until the vehicle has stopped in a safe, level area, retract the belt fully to convert it back to emergency locking mode and then extend it around you again.
If the belt is locked and cannot be pulled out, retract the belt once, and then try pulling it out slowly. If this fails, pull the belt strongly one time and loosen, then pull it out again slowly.

▼Automatic Locking Mode

Always use the automatic locking mode to keep the child-restraint system from shifting to an unsafe position in the event of an accident. To enable seat belt automatic locking mode, pull it all the way out and connect it as instructed on the child-restraint system. It will retract down to the child-restraint system and stay locked on it. See the section on child restraint (page 2-30).

Seat Belt Systems

Seat Belt

▼Fastening the Seat Belt

1. Grasp the seat belt tongue.
2. Slowly pull out the lap/shoulder belt.

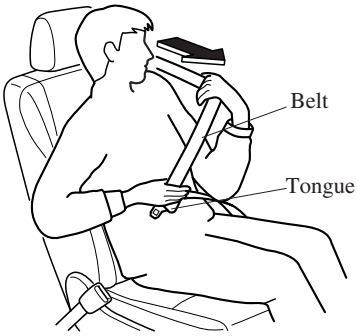

3. Insert the seat belt tongue into the seat belt buckle until you hear a click sound.

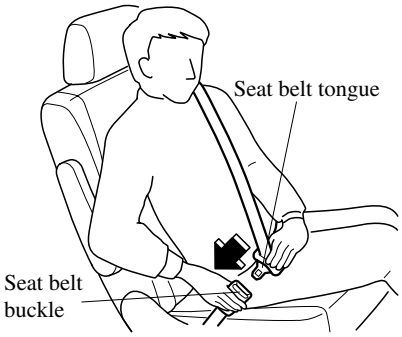

⚠ WARNING

Positioning the Shoulder Portion of the Seat Belt:

Improper positioning of the shoulder portion of the seat belt is dangerous. Always make sure the shoulder portion of the seat belt is positioned across your shoulder and near your neck, but never under your arm, on your neck, or on your upper arm.

4. Position the lap belt as low as possible, not on the abdominal area, then adjust the shoulder belt so that it fits snugly against your body.

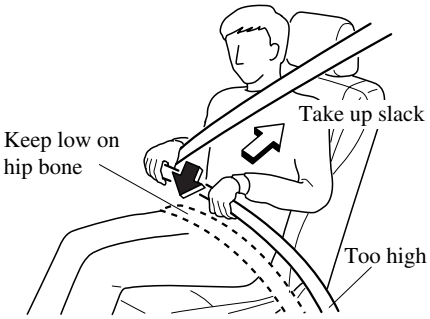

⚠ WARNING

Positioning the Lap Portion of the Seat Belt:

The lap portion of the seat belt worn too high is dangerous. In a collision, this would concentrate the impact force directly on the abdominal area, causing serious injury. Wear the lap portion of the belt snugly and as low as possible.

▼Unfastening the Seat Belt

Depress the button on the seat belt buckle. If the belt does not fully retract, pull it out and check for kinks or twists. Then make sure it remains untwisted as it retracts.

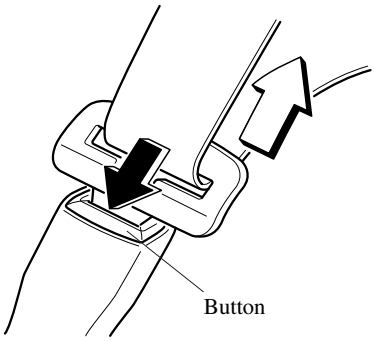

NOTE
If a belt does not fully retract, inspect it for kinks and twists. If it is still not retracting properly, have it inspected at an Authorized Mazda Dealer.

To secure the outboard-rear row seat belts when not in use, insert the belts into their seat belt retainers.

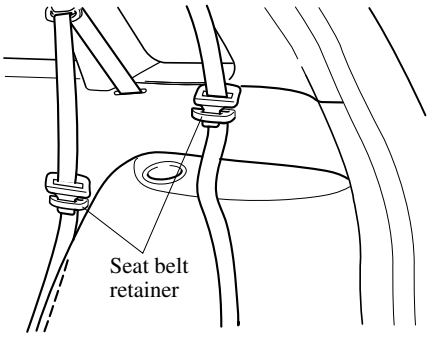

▼Front Shoulder Belt Adjuster

Adjust the height of the shoulder belt if the seat belt touches your neck, or if it crosses your arm instead of your shoulder. To raise the shoulder belt adjuster, push the adjuster up. To lower the shoulder belt adjuster, pull the adjuster and slide it down. Make sure the adjuster is locked.

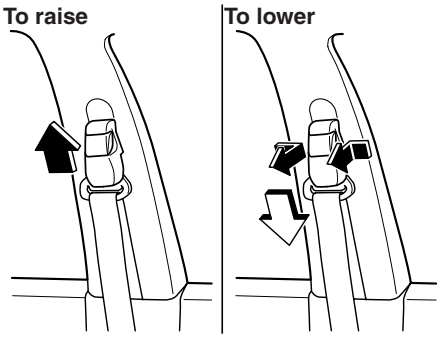

⚠ WARNING

Positioning the Shoulder Portion of the Seat Belt:

Improper positioning of the shoulder portion of the seat belt is dangerous. Always make sure the shoulder portion of the seat belt is positioned across your shoulder and near your neck, but never under your arm, on your neck, or on your upper arm.

Front Seat Belt Pretensioner and Load Limiting Systems

For optimum protection, the driver and front passenger seat belts are equipped with pretensioner and load limiting systems. For both these systems to work properly you must wear the seat belt properly.

Pretensioners:
In moderate or severe frontal or near-frontal accidents, the front air bag and pretensioner systems deploy simultaneously. The front seat belt retractors remove slack quickly as the air bags are expanding. Any time the air bags and front seat belt pretensioners have deployed they must be replaced.
During a side collision, the side air bag, curtain air bag, and pretensioner system operate simultaneously on the side in which the collision occurs.
(With Driver and Front Passenger Occupant Classification System)
In addition, the pretensioner system for the front passenger, like the front and side passenger air bag, is designed to only deploy in accordance with the total seated weight on the front passenger seat.
For details, refer to the front passenger seat weight sensors (page 2-61).

Load limiter:
The load limiting system releases belt webbing in a controlled manner to reduce belt force on the occupant's chest. While the most severe load on a seat belt occurs in frontal collisions, the load limiter has an automatic mechanical function and can activate in any accident mode with sufficient occupant movement.
Even if the pretensioners have not deployed, the load limiting function must be checked by an Authorized Mazda Dealer after any collision.

WARNING

Wear seat belts only as recommended in this owner's manual:
Incorrect positioning of the driver and front passenger seat belts is dangerous. Without proper positioning, the pretensioner and load limiting systems cannot provide adequate protection in an accident and this could result in serious injury. For more details about wearing seat belts, refer to "Fastening the seat belts" (page 2-22).

Have your seat belts changed immediately if the pretensioner or load limiter has been expended:

Always have an Authorized Mazda Dealer immediately inspect the front seat belt pretensioners and air bags after any collision. Like the air bags, the front seat belt pretensioners and load limiters will only function once and must be replaced after any collision that caused them to deploy. A seat belt with an expended pretensioner or load limiter is still better than wearing no seat belt at all; however, if the front seat belt pretensioners and load limiters are not replaced, the risk of injury in a collision will increase.

Do not modify the components or wiring, or use electronic testing devices on the pretensioner system:

Modifying the components or wiring of the pretensioner system, including the use of electronic testing devices is dangerous. You could accidentally activate it or make it inoperable which would prevent it from activating in an accident. The occupants or repairers could be seriously injured.

Properly dispose of the pretensioner system:

Improper disposal of the pretensioner system or a vehicle with non-deactivated pretensioners is dangerous. Unless all safety procedures are followed, injury could result. Ask an Authorized Mazda Dealer how to safely dispose of the pretensioner system or how to scrap a pretensioner-equipped vehicle.

NOTE

- *The pretensioner system will activate in a moderate or greater frontal or near-frontal, or a severe side collision. It will not activate in most rollovers, rear impacts.*
  (With Driver and Front Passenger Occupant Classification System)
  In addition, the pretensioner system for the front passenger is designed to only deploy in accordance with the total seated weight on the front passenger seat.
- *Some smoke (non-toxic gas) will be released when the air bags and pretensioners deploy. This does not indicate a fire. This gas normally has no effect on occupants, however, those with sensitive skin may experience light skin irritation. If residue from the deployment of the air bags or the front pretensioner system gets on the skin or in the eyes, wash it off as soon as possible.*

▼Air Bag/Front Seat Belt Pretensioner System Warning Light

If the air bag/front seat belt pretensioner system is working properly, the warning light illuminates when the ignition is switched ON or after the engine is cranked. The warning light turns off after a specified period of time.

Seat Belt Systems

A system malfunction is indicated if the warning light constantly flashes, constantly illuminates or does not illuminate at all when the ignition is switched ON. If any of these occur, consult an Authorized Mazda Dealer as soon as possible. The system may not operate in an accident.

WARNING

Never tamper with the air bag/ pretensioner systems and always have an Authorized Mazda Dealer perform all servicing and repairs:

Self-servicing or tampering with the systems is dangerous. An air bag/ pretensioner could accidentally activate or become disabled causing serious injury or death.

▼Air Bag/Front Seat Belt Pretensioner System Warning Beep

If a malfunction is detected in the air bag/ front seat belt pretensioner systems and the warning light, a warning beep sound will be heard for about 5 seconds every minute.

The air bag and seat belt pretensioner system warning beep sound will continue to be heard for approximately 35 minutes. Have your vehicle inspected at an Authorized Mazda Dealer as soon as possible.

WARNING

Do not drive the vehicle with the air bag/front seat belt pretensioner system warning beep sounding:

Driving the vehicle with the air bag/ front seat belt pretensioner system warning beep sounding is dangerous. In a collision, the air bags and the front seat belt pretensioner system will not deploy and this could result in death or serious injury.
Contact an Authorized Mazda Dealer to have the vehicle inspected as soon as possible.

Seat Belt Extender

If your seat belt is not long enough, even when fully extended, a seat belt extender may be available to you at no charge from your Authorized Mazda Dealer.
This extender will be only for you and for the particular vehicle and seat. Even if it plugs into other seat belts, it may not hold in the critical moment of a crash.
When ordering an extender, only order one that provides the necessary additional length to fasten the seat belt properly.
Please contact your Authorized Mazda Dealer for more information.

WARNING

Do not use a seat belt extender unless it is necessary:

Using a seat belt extender when not necessary is dangerous. The seat belt will be too long and not fit properly. In an accident, the seat belt will not provide adequate protection and you could be seriously injured. Only use the extender when it is required to fasten the seat belt properly.

Do not use an improper extender:

Using a seat belt extender that is for another person or a different vehicle or seat is dangerous. The seat belt will not provide adequate protection and the user could be seriously injured in an accident. Only use the extender provided for you and for the particular vehicle and seat. NEVER use the extender in a different vehicle or seat. If you sell your Mazda, do not leave your seat belt extender in the vehicle. It could be used accidentally by the new owner of the vehicle. After removing the seat belt extender, discard it. Never use the seat belt extender in any other vehicle you may own in the future.

Do not use an extender that is too long:

Using an extender that is too long is dangerous. The seat belt will not fit properly. In an accident, the seat belt will not provide adequate protection and you could be seriously injured. Do not use the extender or choose one shorter in length if the distance between the extender's buckle and the center of the user's body is less than 15 cm (6 in).

Do not leave a seat belt extender connected to the buckle:

Leaving a seat belt extender connected to the buckle without using the seat belt is dangerous. When the seat belt extender is connected to the driver's seat belt buckle (or front passenger) seat, the SRS driver's (or front passenger's) air bag system will determine that the driver (or front passenger) is wearing the seat belt even if the driver (or front passenger) is not wearing it. This condition could cause the driver's (or front passenger's) air bag to not activate correctly and result in death or serious injury in the event of collision. Always wear the seat belt with the seat belt extender.

Do not use the seat belt extender when installing a child-restraint system on the front or rear passenger seat:

Using a seat belt extender to fasten a child-restraint system on any seat is dangerous. Always follow the child-restraint system manufacturer's installation instructions and never use a seat belt extender.

NOTE

When not in use, remove the seat belt extender and store it in the vehicle. If the seat belt extender is left connected, the seat belt extender might get damaged as it will not retract with the rest of the seat belt and can easily fall out of the door when not in use and be damaged. In addition, the seat belt warning light will not illuminate and function properly.

Seat Belt Warning Light

With warning light for front passenger's seat

The seat belt warning light illuminates if the driver or front passenger's seat is occupied and the seat belt is not fastened when the ignition switched ON.

Without warning light for front passenger's seat

The seat belt warning light illuminates if the driver's seat belt is not fastened when the ignition switched ON.

Seat Belt Reminder

If the vehicle is driven with the driver or front passenger's seat belt unfastened, the seat belt warning light illuminates and a warning chime sounds.

NOTE
Some models do not have the seat belt reminder function for the front passenger's seat.

If the driver or front passenger's seat belt is unfastened (only when the front passenger seat is occupied) and the vehicle is driven at a speed faster than about 20 km/h (12 mph), the warning light will flash and a beep sound will be heard. After a short time, the warning light stops flashing, but remains illuminated, and the beep sound stops.

Until a seat belt is fastened or a given period of time has elapsed, the beep sound will not stop even if the vehicle speed falls below 20 km/h (12 mph).

NOTE
- *The warning light flashes and a beep sound will be heard for about 6 seconds if the driver's seat belt is not fastened when the ignition is switched ON.*
- *If a driver or front passenger's seat belt is unfastened after the beep sound turns off (warning light remains illuminated), and the vehicle speed exceeds 20 km/h (12 mph), the warning light flashes and beep sound activates again.*
- *Placing items on the front passenger seat may cause the front passenger seat belt warning function to operate depending on the weight of the item.*
- *To allow the front passenger seat weight sensor to function properly, do not place and sit on an additional seat cushion on the front passenger seat. The sensor may not function properly because the additional seat cushion could cause sensor interference.*
- *When a small child sits on the front passenger seat, it is possible that the warning light will not operate.*

Child Restraint Precautions

Mazda strongly urges the use of child-restraint systems for children small enough to use them.

You are required by law to use a child-restraint system for children in the U.S. and Canada. Check your local and state or provincial laws for specific requirements regarding the safety of children riding in your vehicle.

Whatever child-restraint system you consider, please pick the appropriate one for the age and size of the child, obey the law and follow the instructions that come with the individual child-restraint system.

A child who has outgrown child-restraint systems should sit in the rear and use seat belts, both lap and shoulder. If the shoulder belt crosses the neck or face, move the child closer to the center of the vehicle.

Statistics confirm that the rear seats are the best place for all children up to 12 years of age, and more so with a supplemental restraint system (air bags).

A rear-facing child-restraint system should **NEVER** be used on the front seat with the air bag system activated. The front passenger's seat is also the least preferred seat for other child-restraint systems.

(With Driver and Front Passenger Occupant Classification System)
To reduce the chance of injuries caused by deployment of the front passenger air bag, the front passenger seat weight sensors work as a part of the supplemental restraint system. This system deactivates the front passenger front and side air bags and also the front passenger seat belt pretensioner system when the front passenger air bag deactivation indicator light illuminates.

When an infant or small child sits on the front passenger seat, the system shuts off the front passenger front and side air bags and seat belt pretensioner system, so make sure the front passenger air bag deactivation indicator light illuminates.

Even if the front passenger air bag is shut off, Mazda strongly recommends that children be properly restrained and child-restraint systems of all kinds are properly secured on the rear seats which are the best place for children.

For more details, refer to “Front passenger seat weight sensors” (page 2-61).

WARNING

Use the correct size child-restraint system:

For effective protection in vehicle accidents and sudden stops, a child must be properly restrained using a seat belt or child-restraint system depending on age and size. If not, the child could be seriously injured or even killed in an accident.

Follow the manufacturer's instructions and always keep the child-restraint system buckled down:

An unsecured child-restraint system is dangerous. In a sudden stop or a collision it could move causing serious injury or death to the child or other occupants. Make sure any child-restraint system is properly secured in place according to the child-restraint system manufacturer's instructions. When not in use, remove it from the vehicle or fasten it with a seat belt, or latch it down to BOTH LATCH lower anchors for LATCH child-restraint systems and the corresponding tether anchor.

Always secure a child in a proper child-restraint system:

Holding a child in your arms while the vehicle is moving is extremely dangerous. No matter how strong the person may be, he or she cannot hold onto a child in a sudden stop or collision and it could result in serious injury or death to the child or other occupants. Even in a moderate accident, the child may be exposed to air bag forces that could result in serious injury or death to the child, or the child may be slammed into an adult, causing injury to both child and adult.

Never use a rear-facing child-restraint system in the front seat with an air bag that could deploy:

Rear-facing child-restraint systems on the front seat are particularly dangerous even though you may feel assured that a front passenger air bag will not deploy based on the fact that the front passenger air bag deactivation indicator light illuminates. The child-restraint system can be hit by a deploying air bag and moved violently backward resulting in serious injury or death to the child.

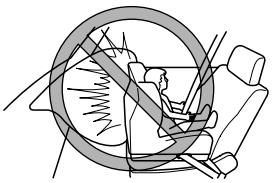

Do not use a rearward facing child restraint on a seat protected by an airbag in front of it.

Child Restraint

Vehicles with a front passenger air bag have a warning label attached as shown below. The warning label reminds you not to put a rear-facing child-restraint system on the front passenger seat at any time.

Do not install a front-facing child-restraint system on the front passenger seat unless it is unavoidable:

In a collision, the force of a deploying air bag could cause serious injury or death to the child. If installing a front-facing child-restraint system on the front passenger seat is unavoidable, move the front passenger seat as far back as possible.

Seating a child in a child-restraint system on the front passenger seat is dangerous under certain conditions (With Driver and Front Passenger Occupant Classification System):

Your vehicle is equipped with front passenger seat weight sensors. Even with the front passenger seat weight sensors, if you must use the front passenger seat to seat a child, using a child-restraint system on the front passenger seat under the following conditions increases the danger of the front passenger air bag deploying and could result in serious injury or death to the child.

- *The front passenger air bag deactivation indicator light does not illuminate when seating a child in the child-restraint system.*
- *Luggage or other items are placed on the seat with the child in the child-restraint system.*
- *A rear passenger or luggage pushing or pulling down on the front passenger seatback.*
- *A rear passenger puts their feet on the front seat rails.*
- *Luggage or other items are placed on the seatback or hung on the head restraint.*
- *Heavy items are placed in the seatback map pocket.*
- *The seat is washed.*
- *Liquids are spilled on the seat.*
- *The front passenger seat is moved backward, pushing into luggage or other items placed behind it.*
- *The front passenger seatback contacts the second-row seat.*
- *Luggage or other items are placed between the front passenger seat and driver seat.*
- *Any accessories, which might increase the total seated weight on the front passenger seat, are attached to the front passenger seat.*

The designated positions with seat belts on the rear seats are the safest places for children. Always use seat belts and child restraints.

Do not allow a child or anyone to lean over or against the side window of a vehicle with side and curtain air bags:

It is dangerous to allow anyone to lean over or against the side window, the area of the front passenger seat, the front and rear window pillars and the roof edge along both sides from which the side and curtain air bags deploy, even if a child-restraint system is used. The impact of inflation from a side or curtain air bag could cause serious injury or death to an out of position child. Furthermore, leaning over or against the front door could block the side and curtain air bags and eliminate the advantages of supplemental protection. With the front air bag and the additional side air bag that comes out of the front seat, the rear seat is always a better location for children. Take special care not to allow a child to lean over or against the side window, even if the child is seated in a child-restraint system.

Child Restraint

Never use one seat belt on more than one person at a time:

Using one seat belt for more than one person at a time is dangerous. A seat belt used in this way cannot spread the impact forces properly and the two passengers could be crushed together and seriously injured or even killed. Never use one belt for more than one person at a time and always operate the vehicle with each occupant properly restrained.

CAUTION

A seat belt or child-restraint system can become very hot in a closed vehicle during warm weather. To avoid burning yourself or a child, check them before you or your child touches them.

NOTE

Your Mazda is equipped with LATCH lower anchors for attachment of specially designed LATCH child-restraint systems in the rear seats. When using these anchors to secure a child-restraint system, refer to “LATCH Child-Restraint Systems” (page 2-43).

Child-Restraint System Installation Position

In this owner's manual, explanation of child-restraint systems is provided for the following three types of popular child-restraint systems: infant seat, child seat, booster seat.

NOTE

- *Installation position is determined by the type of child-restraint system. Always read the manufacturer's instructions and this owner's manual carefully.*
- *Due to variations in the design of child-restraint systems, vehicle seats and seat belts, all child-restraint systems may not fit all seating positions. Before purchasing a child-restraint system, it should be tested in the specific vehicle seating position (or positions) where it is intended to be used. If a previously purchased child-restraint system does not fit, you may need to purchase a different one that will.*

Infant seat
An infant seat provides restraint by bracing the infant's head, neck and back against the seating surface.

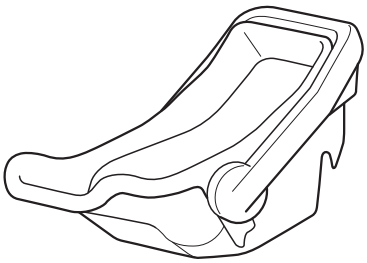

Child seat
A child seat restrains a child's body using the harness.

Booster seat
A booster seat is a child restraint accessory designed to improve the fit of the seat belt system around the child's body.

Installing Child-Restraint Systems

Accident statistics reveal that a child is safer in the rear seats. The front passenger's seat is clearly the worst choice for any child under 12, and with rear-facing child-restraint systems it is clearly unsafe due to air bags.

NOTE
Even if your vehicle is equipped with front passenger seat weight sensors (page 2-61), which automatically deactivates the front passenger air bag, a rear seat is the safest place for a child of any age or size.

Some child-restraint systems now come with tethers and therefore must be installed on the seats that take tethers to be effective. In your Mazda, tethered child-restraint systems can only be accommodated in the four positions on the rear seats.

Some child-restraint systems also employ specially designed LATCH attachments; refer to “LATCH Child-Restraint Systems” (page 2-43).

⚠ WARNING

Tethered Child-Restraint Systems Work Only on Tether-Equipped Rear Seats:
Installation of a tether equipped child-restraint system in the front passenger's seat defeats the safety design of the system and will result in an increased chance of serious injury if the child-restraint system goes forward without benefit of being tethered.
Place tether equipped child-restraint systems where there are tether anchors.

▼Rear Seats Child-Restraint System Installation

Follow these instructions when using a child-restraint system, unless you are attaching a LATCH-equipped child-restraint system to the rear LATCH lower anchors. Refer to “LATCH Child-Restraint Systems” (page 2-43).

NOTE
Follow the child-restraint system manufacturer's instructions carefully. If you are not sure whether you have a LATCH system or tether, check in the child-restraint system manufacturer's instructions and follow them accordingly. Depending on the type of child-restraint system, it may use LATCH system instead of seat belts or if the belt goes across the child's chest, may recommend against using automatic locking mode.

1. If the seat in which you install a child-restraint system has a seat slide function, slide the seat as far back as possible.
2. Make sure the seatback is securely latched by pushing it back until it is fully locked.

3. **(Third-row seat)**
   Raise the head restraint to the top locked position.
   Refer to Head Restraints on page 2-14.

NOTE
(Second-row seat)
The second-row outboard head restraints are non-adjustable.

4. Secure the child-restraint system with the lap portion of the lap/shoulder belt. See the manufacturer's instructions on the child-restraint system for belt routing instructions.

5. To get the retractor into the automatic locking mode, pull the shoulder belt portion of the seat belt until the entire length of the belt is out of the retractor.

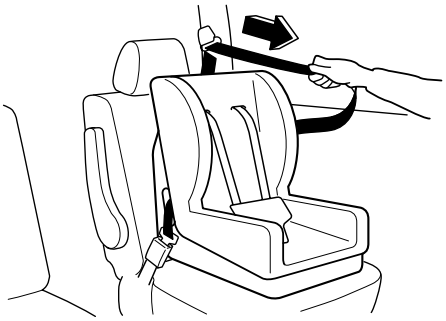

6. Push the child-restraint system firmly into the vehicle seat. Be sure the belt retracts as snugly as possible. A clicking noise from the retractor will be heard during retraction if the system is in the automatic locking mode. If the belt does not lock the seat down tight, repeat this step.

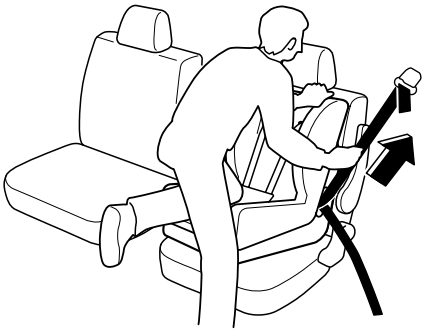

NOTE
Inspect this function before each use of the child-restraint system. You should not be able to pull the shoulder belt out of the retractor while the system is in the automatic locking mode. When you remove the child-restraint system, be sure the belt fully retracts to return the system to emergency locking mode before occupants use the seat belts.

7. If your child-restraint system requires the use of a tether strap, refer to the manufacturer's instructions to hook and tighten the tether strap after raising the head restraint (Third-row seats).

Child Restraint

Anchor bracket location (Second-row seats)

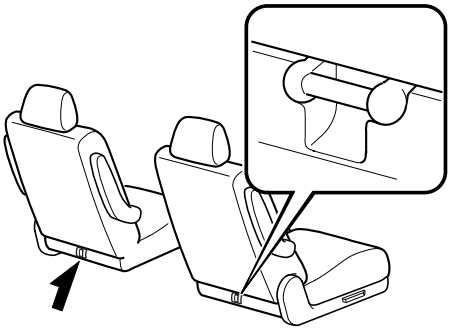

Tether strap position (Second-row seats)

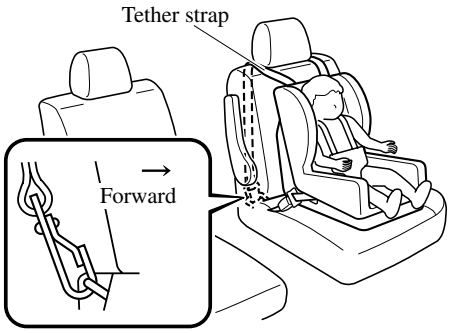

Anchor bracket location (Third-row seats)

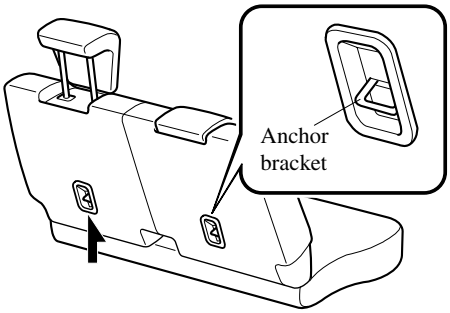

Tether strap position (Third-row seats)

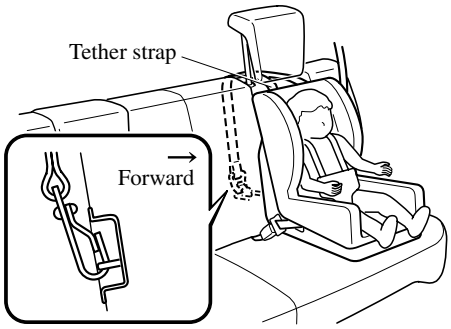

WARNING

Use the tether and tether anchor only for a child-restraint system:

Using the tether or tether anchor to secure anything but a child-restraint system is dangerous. This could weaken or damage the tether or tether anchor and result in injury.

Always route the tether strap between the head restraint and the seatback (Third-row seats):

Routing the tether strap on top of the head restraint is dangerous. In a collision the tether strap could slide off the head restraint and loosen the child-restraint system. The child-restraint system could move which may result in death or injury to the child.

Always attach the tether strap to the correct tether anchor position:

Attaching the tether strap to the incorrect tether anchor position is dangerous. In a collision, the tether strap could come off and loosen the child-restraint system. If the child-restraint system moves it could result in death or injury to the child.

▼If You Must Use the Front Seat for Children

If you cannot put all children in the rear seats, at least put the smallest children in the rear and be sure the largest child up front uses the shoulder belt over the shoulder.
NEVER put a rear-facing child-restraint system on the front passenger seat whether your vehicle is equipped with a seat weight sensor or not.
This seat is also not set up for tethered child-restraint systems, put them in one of the rear seat positions set up with tether anchors.
Likewise the LATCH child-restraint system cannot be secured in the front passenger's seat and should be used in the second-row seats.
Do not allow anyone to sleep against the side window if you have optional side and curtain air bags, it could cause serious injuries to an out of position occupant. As children more often sleep in cars, it is better to put them in the rear seat. If installing the child-restraint system on the front seat is unavoidable, follow these instructions when using a front-facing child-restraint system in the front passenger's seat.

NOTE

- *To check if your front seats have side air bags:*
  Mazda vehicles equipped with side air bag will have a "SRS AIRBAG" tag on the outboard shoulder of the front seats.
- *To check if your vehicle has curtain air bags:*
  Mazda vehicles equipped with curtain air bag will have an "SRS AIRBAG" marking on the window pillars along the roof edge.

⚠ WARNING

Always move the front passenger seat as far back as possible if installing a front-facing child-restraint system on it is unavoidable:

As your vehicle has front air bags and doubly so because your vehicle has side air bags, a front-facing child-restraint system should be put on the front passenger seat only when it is unavoidable.
Even if the front passenger air bag deactivation indicator light illuminates, always move the seat as far back as possible, because the force of a deploying air bag could cause serious injury or death to the child.

Never use a rear-facing child-restraint system in the front seat with an air bag that could deploy:

Rear-facing child-restraint systems on the front seat are particularly dangerous.
Even in a moderate collision, the child-restraint system can be hit by a deploying air bag and moved violently backward resulting in serious injury or death to the child.
Even though you may feel assured that the front passenger air bag will not deploy based on the fact that the front passenger air bag deactivation indicator light illuminates, you should not use a rear-facing child-restraint system in the front seat.

Child Restraint

Do not allow a child to lean over or against the side window of a vehicle with side air bags:

Allowing anyone to lean over or against the front door is dangerous. If the vehicle is equipped with side air bags, the impact of an inflating side air bag could cause serious injury or death to the person. Children are more likely to sleep in the vehicle; when they do, they are more at risk in the front passenger's seat that has a side air bag because they may slump over into the path of the seatback-mounted air bag. Furthermore, leaning over or against the doors could block the side air bag and eliminate the advantages of supplemental protection. With the front air bag and the additional side air bag that deploys from the outboard shoulder of the front passenger seat, the rear seat is always a better location for children who are prone to sleeping. If a child cannot be seated in the rear, do not allow the child to lean over or against the side window, even if the child is seated in a child-restraint system.

Do not allow a child or anyone to lean over or against the side window of a vehicle with side and curtain air bags:

It is dangerous to allow anyone to lean over or against the side window, the area of the front passenger seat, the front and rear window pillars and the roof edge along both sides from which the side and curtain air bags deploy, even if a child-restraint system is used. The impact of inflation from a side or curtain air bag could cause serious injury or death to an out of position child. Furthermore, leaning over or against the front door could block the side and curtain air bags and eliminate the advantages of supplemental protection. With the front air bag and the additional side air bag that comes out of the front seat, the rear seat is always a better location for children. Take special care not to allow a child to lean over or against the side window, even if the child is seated in a child-restraint system.

▼Front Passenger's Seat Child-Restraint System Installation

1. Switch the ignition ON.
2. Slide the seat as far back as possible.

3. Place the child-restraint system on the seat without putting your weight on the seat and fasten the seat belt. See the manufacturer's instructions on the child-restraint system for belt routing instructions.
4. To get the retractor into the automatic locking mode, pull the shoulder belt portion of the seat belt until the entire length of the belt is out of the retractor.
5. Push the child-restraint system firmly into the vehicle seat. Be sure the belt retracts as snugly as possible. A clicking noise from the retractor will be heard during retraction if the system is in automatic locking mode. If the belt does not lock the seat down tight, repeat the previous step and also this one.

NOTE

- *Inspect this function before each use of the child-restraint system. You should not be able to pull the shoulder belt out of the retractor while the system is in the automatic locking mode. When you remove the child-restraint system, be sure the belt fully retracts to return the system to emergency locking mode before occupants use the seat belts.*
- *Follow the child-restraint system manufacturer's instructions carefully. Depending on the type of child-restraint system, it may not employ seat belts which are in automatic locking mode.*

6. Seat your child safely in the child-restraint system and secure the child according to the instructions from the child-restraint system manufacturer.
7. **(With Driver and Front Passenger Occupant Classification System)**
   Make sure the front passenger air bag deactivation indicator light illuminates after installing a child-restraint system on the front passenger seat.
   If the front passenger air bag deactivation indicator light does not illuminate, remove the child-restraint system, switch the ignition to OFF or ACC, and then re-install the child-restraint system.

WARNING

Do not seat a child in a child-restraint system on the front passenger seat if the front passenger air bag deactivation indicator light does not illuminate (With Driver and Front Passenger Occupant Classification System):

While it is always better to install any child-restraint system on the rear seat, it is imperative that a child-restraint system ***ONLY*** *be used on the front passenger seat if the deactivation indicator light illuminates when the child is seated in the child-restraint system. Seating a child in a child-restraint system installed on the front passenger seat with the front passenger air bag deactivation indicator light not illuminated is dangerous. If this indicator light does not illuminate, this means that the front passenger front and side air bags, and seat belt pretensioner are ready for deployment. If an accident were to deploy an air bag, a child in a child-restraint system sitting in the front passenger seat could be seriously injured or killed. If the indicator light does not illuminate after seating a child in a child-restraint system on the front passenger seat, seat a child in a child-restraint system on the rear seat and consult an Authorized Mazda Dealer as soon as possible.*

LATCH Child-Restraint Systems

Your Mazda is equipped with LATCH lower anchors for attachment of specially designed LATCH child-restraint systems the second-row seats. Both anchors must be used, otherwise the seat will bounce around and put the child in danger. Most LATCH child-restraint systems must also be used in conjunction with a tether to be effective. If they have a tether you must use it to better assure your child's safety.

WARNING

Follow the manufacturer's instructions for the use of the child-restraint system:
An unsecured child-restraint system is dangerous. In a sudden stop or a collision it could move causing serious injury or death to the child or other occupants. Make sure the child-restraint system is properly secured in place according to the child-restraint system manufacturer's instructions.

Never attach two child-restraint systems to the same LATCH lower anchor:
Attaching two child-restraint systems to the same LATCH lower anchor is dangerous. In a collision, one anchor may not be strong enough to hold two child-restraint system attachments, and it may break, causing serious injury or death. If you use the seat position for another child-restraint system when an outboard LATCH position is occupied, use the center seat belts instead, and the tether if tether-equipped.

Make sure the child-restraint system is properly secured:
An unsecured child-restraint system is dangerous. In a sudden stop or a collision it could move causing serious injury or death to the child or other occupants. Follow the child-restraint system manufacturer's instructions on belt routing to secure the seat just as you would with a child in it so that nobody is tempted to put a child in an improperly secured seat later on. When not in use, remove it from the vehicle or fasten it with a seat belt, or latch it down to BOTH LATCH lower anchors for LATCH child-restraint systems.

Make sure there are no seat belts or foreign objects near or around the LATCH child-restraint system:
Not following the child-restraint system manufacturer's instructions when installing the child-restraint system is dangerous. If seat belts or a foreign object prevent the child-restraint system from being securely attached to the LATCH lower anchors and the child-restraint system is installed improperly, the child-restraint system could move in a sudden stop or collision causing serious injury or death to the child or other occupants. When installing the child-restraint system, make sure there are no seat belts or foreign objects near or around the LATCH lower anchors. Always follow the child-restraint system manufacturer's instructions.

Child Restraint

▼LATCH Child-Restraint System Installation Procedure (Second-Row Seats)

1. Slide the second-row seat as far back as possible.
2. Make sure the seatback is securely latched by pushing it back until it is fully locked.
3. Expand the area between the seat bottom and the seatback slightly to verify the locations of the LATCH lower anchors.

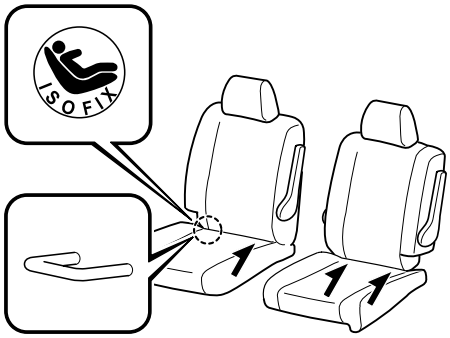

NOTE
The markings above the LATCH lower anchors indicate the locations of LATCH lower anchors for the attachment of a child-restraint system.

4. Secure the child-restraint system using BOTH LATCH lower anchors, following the child-restraint system manufacturer's instruction. Pull on the child-restraint to be sure both anchors are engaged.
5. If your child-restraint system came equipped with a tether, that means it is very important to properly secure the tether for child safety. Please carefully follow the child-restraint system manufacturer's instructions when installing tethers.

Anchor bracket location

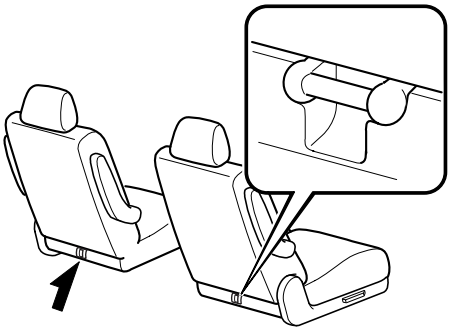

Tether strap position

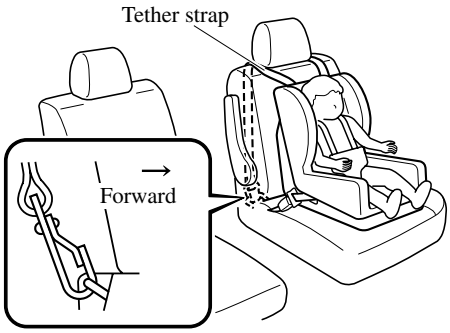

WARNING

Use the tether and tether anchor only for a child-restraint system:

Using the tether or tether anchor to secure anything but a child-restraint system is dangerous. This could weaken or damage the tether or tether anchor and result in injury.

Always attach the tether strap to the correct tether anchor position:

Attaching the tether strap to the incorrect tether anchor position is dangerous. In a collision, the tether strap could come off and loosen the child-restraint system. If the child-restraint system moves it could result in death or injury to the child.

Supplemental Restraint System (SRS) Precautions

The front and side supplemental restraint systems (SRS) include 6 air bags. **Please verify the air bags equipped on your vehicle by locating the "SRS AIRBAG" location indicators.** These indicators are visible in the area where the air bags are installed.
The air bags are installed in the following locations:

- The steering wheel hub (driver air bag)
- The front passenger dashboard (front passenger air bag)
- The outboard sides of the front seatbacks (side air bags)
- The front and rear window pillars, and the roof edge along both sides (curtain air bags)

The air bag supplemental restraint systems are designed to provide supplemental protection in certain situations, so seat belts are always important in the following ways:

Without seat belt usage, the air bags cannot provide adequate protection during an accident.
Seat belt usage is necessary to:
- Keep the occupant from being thrown into an inflating air bag.
- Reduce the possibility of injuries during an accident that is not designed for air bag inflation, such as roll-over or rear impact.
- Reduce the possibility of injuries in frontal, near frontal, side collisions that are not severe enough to activate the air bags.
- Reduce the possibility of being thrown from your vehicle.
- Reduce the possibility of injuries to lower body and legs during an accident because the air bags provide no protection to these parts of the body.
- Hold the driver in a position which allows better control of the vehicle.

If your vehicle is also equipped with a driver and front passenger occupant classification system, refer to the Driver and Front Passenger Occupant Classification System (page 2-61) for details.
If your vehicle is equipped with a driver and front passenger occupant classification system, the front passenger air bag deactivation indicator light illuminates for a specified time after the ignition is switched ON.

Small children must be protected by a child-restraint system as stipulated by law in every state and province. In certain states and provinces, larger children must use a child-restraint system (page 2-30).

Carefully consider which child-restraint system is necessary for your child and follow the installation directions in this Owner's Manual as well as the child-restraint system manufacturer's instructions.

WARNING

Seat belts must be worn in air bag equipped vehicles:
Depending only on the air bags for protection during an accident is dangerous. Alone, air bags may not prevent serious injuries. The appropriate air bags can be expected to inflate only in the first accident, such as frontal, near frontal, side collisions that are at least moderate. Vehicle occupants should always wear seat belts.

Children should not ride in the front passenger seat:
Placing a child, 12 years or under, in the front seat is dangerous. The child could be hit by a deploying air bag and be seriously injured or even killed. Even if the front passenger air bag deactivation indicator light illuminates, always move the front passenger seat as far back as possible. A sleeping child is more likely to lean against the door and be hit by the side air bag in a moderate collision to the front-passenger side of the vehicle. Whenever possible, always secure a child 12 years and under on the rear seats with an appropriate child-restraint system for the child's age and size.

Never use a rear-facing child-restraint system in the front seat with an air bag that could deploy:

Rear-facing child-restraint systems on the front seat are particularly dangerous even though you may feel assured that a front passenger air bag will not deploy based on the fact that the front passenger air bag deactivation indicator light illuminates. The child-restraint system can be hit by a deploying air bag and moved violently backward resulting in serious injury or death to the child.

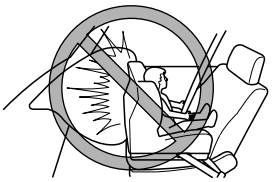

Do not sit too close to the driver and front passenger air bags:

Sitting too close to the driver and front passenger air bag modules or placing hands or feet on them is extremely dangerous. The driver and front passenger air bags inflate with great force and speed. Serious injuries could occur if someone is too close. The driver should always hold onto only the rim of the steering wheel. The front seat passenger should keep both feet on the floor. Front seat occupants should adjust their seats as far back as possible and always sit upright against the seatbacks with seat belts worn properly.

Sit in the center of the seat and wear seat belts properly:

Sitting too close to the side air bag modules or placing hands on them, or sleeping up against the door or hanging out the windows is extremely dangerous. The side and curtain air bags inflate with great force and speed directly expanding along the door on the side the car is hit. Serious injury could occur if someone is sitting too close to the door or leaning against a window, or if rear seat occupants grab the sides of the front seatbacks. Give the side and curtain air bags room to work by sitting in the center of the seat while the vehicle is moving with seat belts worn properly.

Do not attach objects on or around the area where driver and front passenger air bags deploy:

Attaching an object to the driver and front passenger air bag modules or placing something in front of them is dangerous. In an accident, an object could interfere with air bag inflation and injure the occupants.

Do not attach objects on or around the area where a side air bag deploys:

Attaching objects to the front seat in such a way as to cover the outboard side of the seat in any way is dangerous. In an accident the object could interfere with the side air bag, which inflates from the outboard side of the front seats, impeding the added protection of the side air bag system or redirecting the air bag in a way that is dangerous. Furthermore, the bag could be cut open releasing the gas.

Do not hang net bags, map pouches or backpacks with side straps on the front seats. Never use seat covers on the front seats. Always keep the side air bag modules in your front seats free to deploy in the event of a side collision.

Do not attach objects on or around the area where a curtain air bag deploys:

Attaching objects to the areas where the curtain air bag activates such as on the windshield glass, side door glass, front and rear window pillars and along the roof edge and assist grips is dangerous. In an accident the object could interfere with the curtain air bag, which inflates from the front and rear window pillars and along the roof edge, impeding the added protection of the curtain air bag system or redirecting the air bag in a way that is dangerous. Furthermore, the bag could be cut open releasing the gas.

Do not place hangers or any other objects on the assist grips. When hanging clothes, hang them on the coat hook directly. Always keep the curtain air bag modules free to deploy in the event of a side collision.

Do not place luggage or other objects under the front seats:

Placing luggage or other objects under the front seats is dangerous. The components essential to the supplemental restraint system could be damaged, and in the event of a side collision, the appropriate air bags may not deploy, which could result in death or serious injury. To prevent damage to the components essential to the supplemental restraint system, do not place luggage or other objects under the front seats.

Do not touch the components of the supplemental restraint system after the air bags have inflated:

Touching the components of the supplemental restraint system after the air bags have inflated is dangerous. Immediately after inflation, they are very hot. You could get burned.

Never install any front-end equipment to your vehicle:

Installation of front-end equipment, such as frontal protection bar (kangaroo bar, bull bar, push bar, or other similar devices), snowplow, or winches, is dangerous. The air bag crash sensor system could be affected. This could cause air bags to inflate unexpectedly, or it could prevent the air bags from inflating during an accident. Front occupants could be seriously injured.

Do not modify the suspension:

Modifying the vehicle suspension is dangerous. If the vehicle's height or the suspension is modified, the vehicle will be unable to accurately detect a collision resulting in incorrect or unexpected air bag deployment and the possibility of serious injuries.

Do not modify a front door or leave any damage unrepaired. Always have an Authorized Mazda Dealer inspect a damaged front door:

Modifying a front door or leaving any damage unrepaired is dangerous. Each front door has a side crash sensor as a component of the supplemental restraint system. If holes are drilled in a front door, a door speaker is left removed, or a damaged door is left unrepaired, the sensor could be adversely affected causing it to not detect the pressure of an impact correctly during a side collision. If a sensor does not detect a side impact correctly, the side and curtain air bags and the front seat belt pretensioner may not operate normally which could result in serious injury to occupants.

Do not modify the supplemental restraint system:

Modifying the components or wiring of the supplemental restraint system is dangerous. You could accidentally activate it or make it inoperable. Do not make any modifications to the supplemental restraint system. This includes installing trim, badges, or anything else over the air bag modules. It also includes installing extra electrical equipment on or near system components or wiring. An Authorized Mazda Dealer can provide the special care needed in the removal and installation of front seats. It is important to protect the air bag wiring and connections to assure that the bags do not accidentally deploy, the driver seat slide position sensor and front passenger seat weight sensors are not damaged and that the seats retain an undamaged air bag connection.

NOTE

- *When an air bag deploys, a loud inflation noise can be heard and some smoke will be released. Neither is likely to cause injury, however, the texture of the air bags may cause light skin injuries on body parts not covered with clothing through friction.*
- *Should you sell your Mazda, we urge you to tell the new owner of its air bag systems and that familiarization with all instructions about them, from the Owner's Manual, is important.*
- *This highly-visible label is displayed which warns against the use of rear-facing child-restraint systems on the front passenger seat.*

Supplemental Restraint System Components

With front passenger occupant classification system

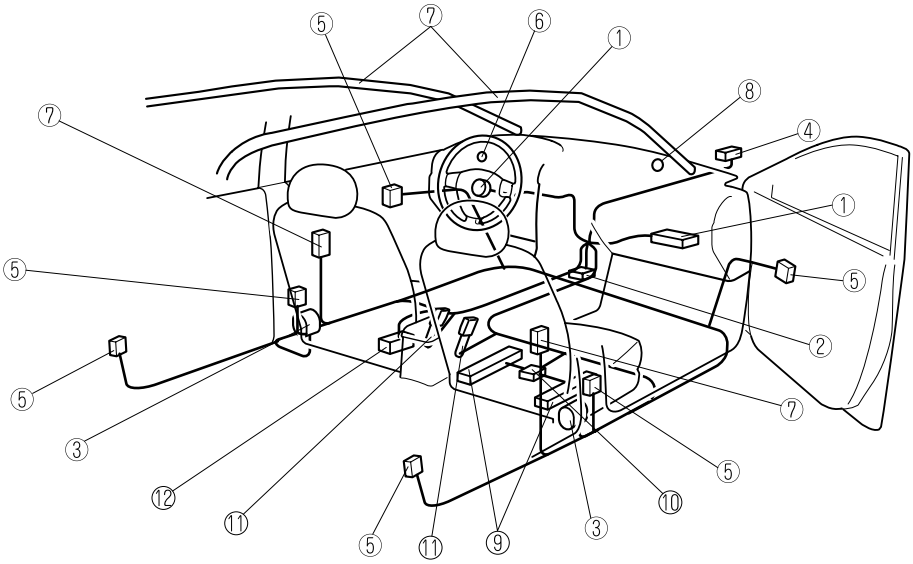

Without front passenger occupant classification system

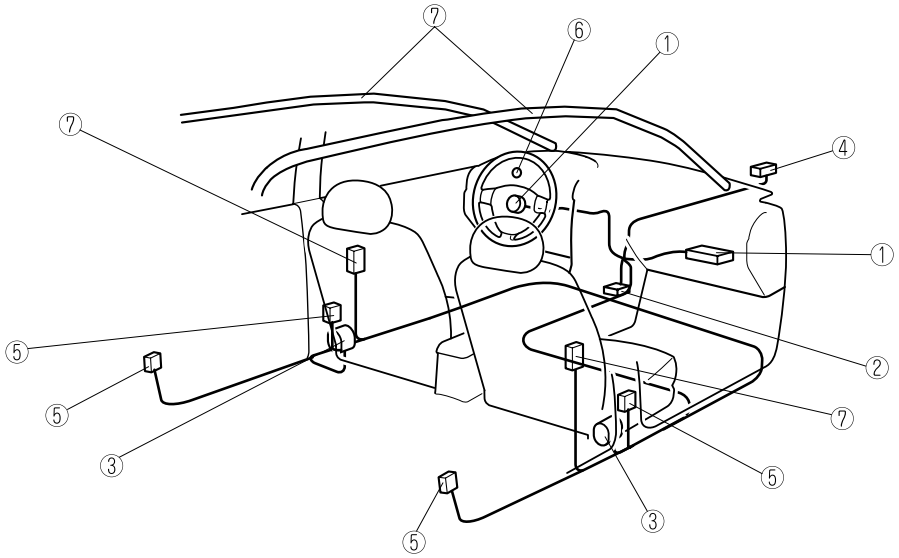

① Driver/Front passenger inflators and air bags
② Crash sensor, and diagnostic module (SAS unit)
③ Front seat belt pretensioner and load limiting systems (page 2-24)
④ Front air bag sensor
⑤ Side crash sensors
⑥ Air bag/front seat belt pretensioner system warning light (page 2-57)
⑦ Side and curtain inflators and air bags
⑧ Front passenger air bag deactivation indicator light (page 2-61)
⑨ Front passenger seat weight sensors (page 2-61)
⑩ Front passenger seat weight sensor control module
⑪ Driver and front passenger seat belt buckle switches (page 2-65)
⑫ Driver seat slide position sensor (page 2-61)

NOTE
⑧ - ⑫ *are equipped only on models with the driver and front passenger occupant classification system.*

How the SRS Air Bags Work

Your Mazda is equipped with the following types of SRS air bags. SRS air bags are designed to work together with the seat belts to help to reduce injuries during an accident. The SRS air bags are designed to provide further protection for passengers in addition to the seat belt functions. Be sure to wear seat belts properly.

▼Front Seat Belt Pretensioners

The front seat belt pretensioners are designed to deploy in moderate or severe frontal, near frontal collisions. In addition, during a side collision, the pretensioner operates on the side in which the collision occurs.
The pretensioners operate differently depending on what types of air bags are equipped.
For details on the seat belt pretensioner operation, refer to “SRS Air Bag Deployment Criteria” (page 2-58).

▼Driver Air Bag

The driver's air bag is mounted in the steering wheel.
When air bag crash sensors detect a frontal impact of greater than moderate force, the driver's air bag inflates quickly helping to reduce injury mainly to the driver's head or chest caused by directly hitting the steering wheel.
For more details about air bag deployment, refer to “SRS Air Bag Deployment Criteria” (page 2-58).
(With Driver and Front Passenger Occupant Classification System)
The driver's dual-stage air bag controls air bag inflation in two energy stages. During an impact of moderate severity the driver's air bag deploys with lesser energy, whereas during more severe impacts, it deploys with more energy.

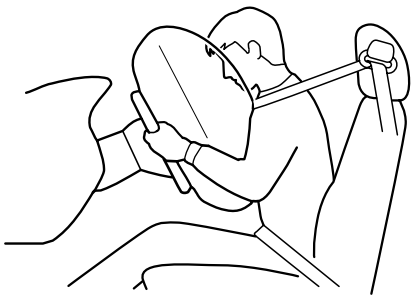

▼Front Passenger Air Bag

The front passenger air bag is mounted in the front passenger dashboard. The inflation mechanism for the front passenger air bag is the same as the driver's air bag, as mentioned above.
For more details about air bag deployment, refer to “SRS Air Bag Deployment Criteria” (page 2-58).
(With Driver and Front Passenger Occupant Classification System)
In addition, the front passenger air bag is designed to only deploy in accordance with the total seated weight on the front passenger seat. For details, refer to the driver and front passenger occupant classification system (page 2-61).

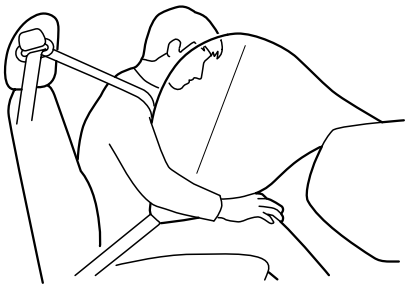

▼Side Air Bags

The side air bags are mounted in the outboard sides of the front seatbacks.
When the air bag crash sensors detect a side impact of greater than moderate force, the system inflates the side air bag only on the side in which the vehicle was hit. The side air bag inflates quickly to reduce injury to the driver or front passenger's chest caused by directly hitting interior parts such as a door or window.
For more details about air bag deployment, refer to “SRS Air Bag Deployment Criteria” (page 2-58).

(With Driver and Front Passenger Occupant Classification System)
In addition, the front passenger side air bag is designed to only deploy in accordance with the total seated weight on the front passenger seat. For details, refer to the driver and front passenger occupant classification system (page 2-61).

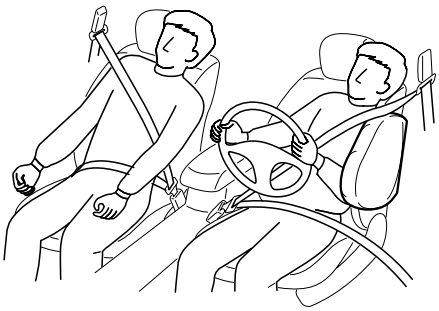

▼Curtain Air Bags

The curtain air bags are mounted in the front and rear window pillars, and the roof edge along both sides.
When the air bag crash sensors detect a side impact of greater than moderate force, the curtain air bag inflates quickly and helps to reduce injury mainly to the rear outboard passenger's head caused by directly hitting interior parts such as a door or window.
For more details about air bag deployment, refer to “SRS Air Bag Deployment Criteria” (page 2-58).
In a side impact:
Greater than moderate impact to one side of the vehicle will cause the curtain air bag on that side only to inflate.

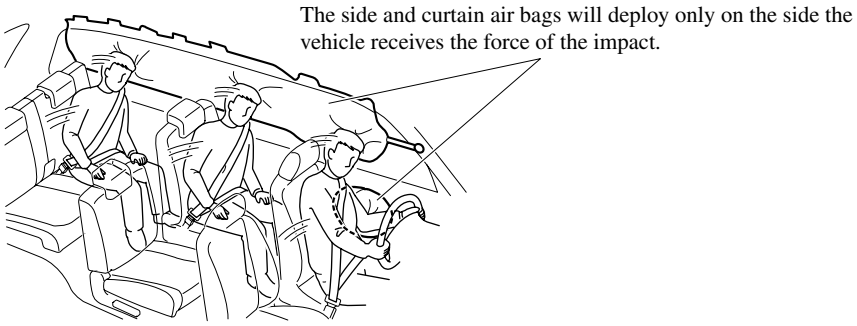

▼Air Bag/Front Seat Belt Pretensioner System Warning Light

If the air bag/front seat belt pretensioner system is working properly, the warning light illuminates when the ignition is switched ON or after the engine is cranked. The warning light turns off after a specified period of time.

A system malfunction is indicated if the warning light constantly flashes, constantly illuminates or does not illuminate at all when the ignition is switched ON. If any of these occur, consult an Authorized Mazda Dealer as soon as possible. The system may not operate in an accident.

⚠ WARNING

Never tamper with the air bag/pretensioner systems and always have an Authorized Mazda Dealer perform all servicing and repairs:

Self-servicing or tampering with the systems is dangerous. An air bag/pretensioner could accidentally activate or become disabled causing serious injury or death.

▼Air Bag/Front Seat Belt Pretensioner System Warning Beep

If a malfunction is detected in the air bag/front seat belt pretensioner systems and the warning light, a warning beep sound will be heard for about 5 seconds every minute.

The air bag and seat belt pretensioner system warning beep sound will continue to be heard for approximately 35 minutes.
Have your vehicle inspected at an Authorized Mazda Dealer as soon as possible.

⚠ WARNING

Do not drive the vehicle with the air bag/front seat belt pretensioner system warning beep sounding:

Driving the vehicle with the air bag/front seat belt pretensioner system warning beep sounding is dangerous. In a collision, the air bags and the front seat belt pretensioner system will not deploy and this could result in death or serious injury. Contact an Authorized Mazda Dealer to have the vehicle inspected as soon as possible.

SRS Air Bag Deployment Criteria

This chart indicates the applicable SRS equipment that will deploy depending on the type of collision.
(The illustrations are the representative cases of collisions.)

SRS equipment	Types of collision		
	A severe frontal/near frontal collision	A severe side collision	A rear collision
	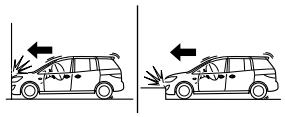	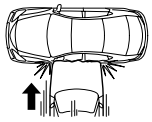	
	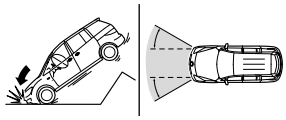		
Front seat belt pretensioner	X*1 (both sides)	X*1 (impact side only)	No air bag and front seat belt pretensioner will be activated in a rear collision.
Driver air bag	X		
Front passenger air bag	X*1		
Side air bag		X*1 (impact side only)	
Curtain air bag		X (impact side only)	

X: The SRS air bag equipment is designed to deploy in a collision.
*1: **(With Driver and Front Passenger Occupant Classification System)**
The front passenger front and side air bags and the seat belt pretensioner are designed to deploy depending on the condition of the total seated weight on the front passenger seat.

Limitations to SRS Air Bag

In severe collisions such as those described previously in “SRS Air Bag Deployment Criteria”, the applicable SRS air bag equipment will deploy. However, in some accidents, the equipment may not deploy depending on the type of collision and its severity.

Limitations to front/near front collision detection:
The following illustrations are examples of front/near front collisions that may not be detected as severe enough to deploy the SRS air bag equipment.

Impacts involving trees or poles

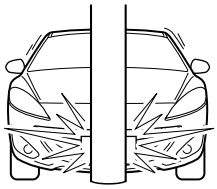

Frontal offset impact to the vehicle

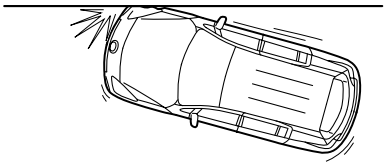

Rear-ending or running under a truck's tail gate

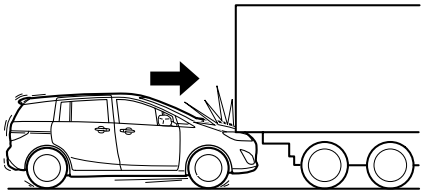

Limitations to side collision detection:
The following illustrations are examples of side collisions that may not be detected as severe enough to deploy the SRS air bag equipment.

Side impacts involving trees or poles

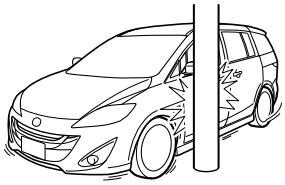

Side impacts with two-wheeled vehicles

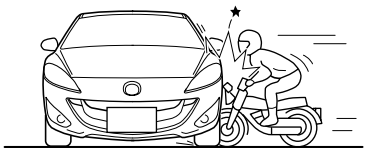

Roll-over

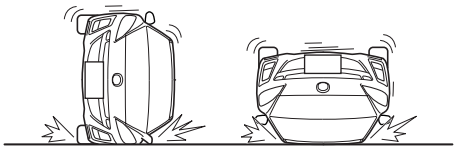

Driver and Front Passenger Occupant Classification System*

First, please read “Supplemental Restraint System (SRS) Precautions” (page 2-46) carefully.

▼Driver Seat Slide Position Sensor

Your vehicle is equipped with a driver seat slide position sensor as a part of the supplemental restraint system. The sensor is located under the driver seat. The sensor determines whether the driver seat is fore or aft of a reference position and sends the seat position to the diagnostic module (SAS unit). The SAS unit is designed to control the deployment of the driver air bag depending on how close the driver seat is to the steering wheel.
The air bag/front seat belt pretensioner system warning light flashes if the sensor has a possible malfunction (page 2-57).

▼Front Passenger Seat Weight Sensors

Your vehicle is equipped with a front passenger seat weight sensors as a part of the supplemental restraint system. These sensors are located under both of the front passenger seat rails. These sensors determine the total seated weight on the front passenger seat and monitor the seat belt buckle for the front passenger seat. The SAS unit is designed to prevent the front passenger front and side air bags and seat belt pretensioner system from deploying if the front passenger air bag deactivation indicator light illuminates.
To reduce the chance of injuries caused by deployment of the front passenger air bag, the system deactivates the front passenger front and side air bags and also the seat belt pretensioner system when the front passenger air bag deactivation indicator light illuminates. Refer to the following table for the front passenger air bag deactivation indicator light illumination conditions.

This system shuts off the front passenger front and side air bags and seat belt pretensioner system, so make sure the front passenger air bag deactivation indicator light illuminates according to the following table.

The air bag/front seat belt pretensioner system warning light flashes and the front passenger air bag deactivation indicator light illuminates if the sensors have a possible malfunction. If this happens, the front passenger front and side air bags and seat belt pretensioner system will not deploy.

*Some models.

Front passenger air bag deactivation indicator light

This indicator light illuminates to remind you that the front passenger front and side air bags and seat belt pretensioner will not deploy during a collision.

If the front passenger weight sensors are normal, the indicator light illuminates when the ignition is switched ON. The light turns off after a few seconds. Then, the indicator light illuminates or is off under the following conditions:

Front passenger air bag deactivation indicator light on/off condition chart

Condition detected by the front passenger occupant classification system	Front passenger air bag deactivation indicator light	Front passenger front and side air bags	Front passenger seat belt pretensioner system
Empty (Not occupied)*1	Off	Deactivated	Deactivated
Child or child-restraint system*2	On	Deactivated	Deactivated
Adult*3	Off	Ready	Ready

*1 : If the front passenger seat belt is buckled, the front passenger air bag deactivation indicator light illuminates, however this does not indicate a malfunction.
*2 : If a larger child sits on the front passenger seat, the sensors might detect the child as being an adult depending on the child's physique.
*3 : If a smaller adult sits on the front passenger seat, the sensors might detect the person as being a child depending on the person's physique.
The curtain air bag is ready for inflating regardless of what the front passenger air bag deactivation indicator light on/off condition chart indicates.

If the front passenger air bag deactivation indicator light does not illuminate when the ignition is switched ON and does not illuminate as indicated in the front passenger air bag deactivation indicator light on/off condition chart, do not allow a child to sit in the front passenger seat and consult an Authorized Mazda Dealer as soon as possible. The system may not work properly in an accident.

WARNING

Do not decrease the total seated weight on the front passenger seat:

When an adult or large child sits on the front passenger seat, decreasing the total seated weight on the front passenger seat required for air bag deployment is dangerous. The front passenger seat weight sensors will detect the reduced total seated weight condition and the front passenger front and side air bags and seat belt pretensioner system will not deploy during an accident. The front passenger will not have the supplementary protection of the air bag, which could result in serious injury. Decreasing the total seated weight on the front passenger seat could result in an air bag not deploying under the following conditions, for example:

- *A rear passenger pushes up on the front passenger seat with their feet.*
- *Luggage or other items placed under the front passenger seat or between the front passenger seat and driver seat that push up the front passenger seat bottom.*
- *The front passenger seat occupant sits in a manner that does not place the entire weight of the occupant on the seat such as by sitting too close to the door, grasping the assist grip or the rim of the moonroof and sitting with the seatback reclined too far.*
- *Any accessories which might decrease the total seated weight on the front passenger seat are attached to the front passenger seat.*

The front passenger front and side air bags and seat belt pretensioner systems will deactivate if the front passenger air bag deactivation indicator light illuminates.

Do not increase the total seated weight on the front passenger seat:

When an infant or small child sits on the front passenger seat, increasing the total seated weight on the front passenger seat is dangerous. The front passenger seat weight sensors will detect the increased total seated weight, which could result in the unexpected deployment of the front passenger front and side air bags and seat belt pretensioner system in an accident and may cause serious injury. Increasing the total seated weight on the front passenger seat could result in the front passenger front and side air bags and seat belt pretensioner system deployment in an accident under the following conditions, for example:

- *Luggage or other items are placed on the seat with the child in the child-restraint system.*
- *A rear passenger or luggage push or pull down on the front passenger seatback.*
- *A rear passenger steps on the front passenger seat rails with their feet.*
- *Luggage or other items are placed on the seatback or hung on the head restraint or armrest.*
- *Heavy items are placed in the seatback map pocket.*
- *The seat is washed.*
- *Liquids are spilled on the seat.*
- *The front passenger seat is moved backward, pushing into luggage or other items placed behind it.*
- *The front passenger seatback contacts the second-row seat.*
- *Luggage or other items are placed between the front passenger seat and driver seat.*
- *Any accessories which might increase the total seated weight on the front passenger seat are attached to the front passenger seat.*

The front passenger front and side air bags and seat belt pretensioner systems will deactivate if the front passenger air bag deactivation indicator light illuminates.

⚠ CAUTION

- *To assure proper deployment of the front air bag and to prevent damage to the sensors in the front seat bottoms:*
  - *Do not place sharp objects on the front seat bottoms or leave heavy luggage on them.*
  - *Do not spill any liquids on the front seats or under the front seats.*
- *To allow the sensors to function properly, always perform the following:*
  - *Adjust the front seats as far back as possible and always sit upright against the seatbacks with seat belts worn properly.*
  - *If you place your child on the front passenger seat, secure the child-restraint system properly and slide the front passenger seat as far back as possible (page 2-40).*

NOTE

- *The system requires about 10 seconds to alternate between turning the front passenger front and side air bags and seat belt pretensioner system on or off.*
- *The front passenger air bag deactivation indicator light may illuminate repeatedly if luggage or other items are put on the front passenger seat, or if the temperature of the vehicle's interior changes suddenly.*
- *The front passenger air bag deactivation indicator light may illuminate for 10 seconds if the total seated weight on the front passenger seat changes.*
- *The air bag/front seat belt pretensioner system warning light might illuminate if the front passenger seat receives a severe impact.*
- *If the front passenger air bag deactivation indicator light does not illuminate after installing a child-restraint system on the front passenger seat, first, re-install your child-restraint system according to the procedure in this owner's manual. Then, if the front passenger air bag deactivation indicator light still does not illuminate, install the child-restraint system on the rear seat and consult an Authorized Mazda Dealer as soon as possible.*
- *If the front passenger air bag deactivation indicator light illuminates when an adult is seated in the front passenger seat, have the passenger re-adjust their posture by sitting with their feet on the floor, and then re-fastening the seat belt. If the front passenger air bag deactivation indicator light still illuminates, move the passenger to the rear seat. If sitting in the rear seat is not possible, slide the front passenger seat as far back as possible. Consult an Authorized Mazda Dealer as soon as possible.*

▼Driver and Front Passenger Buckle Switches

The buckle switches on the front seat belts detect whether or not the front seat belts are securely fastened and further control the deployment of the air bags.

Monitoring and Maintenance

▼Constant Monitoring

The following components of the air bag systems are monitored by a diagnostic system:

- Crash sensors, and diagnostic module (SAS unit)
- Front air bag sensor
- Air bag modules
- Side crash sensors
- Air bag/Front seat belt pretensioner system warning light
- Front seat belt pretensioners
- Related wiring

(With Driver and Front Passenger Occupant Classification System)

- Front passenger air bag deactivation indicator light
- Driver seat slide position sensor
- Front passenger seat weight sensors
- Front passenger seat weight sensor control module

The diagnostic module continuously monitors the system's readiness. This begins when the ignition is switched ON and continues while the vehicle is being driven.

▼Maintenance

The air bag systems do not require regular maintenance. But if any of the following occurs, take your vehicle to an Authorized Mazda Dealer as soon as possible:

- The air bag system warning light flashes.
- The air bag system warning light remains illuminated.
- The air bag system warning light does not illuminate when the ignition is switched ON.
- The air bag system warning beep sound is heard.
- The air bags have deployed.
- **(With Driver and Front Passenger Occupant Classification System)**
  Front passenger air bag deactivation indicator light does not illuminate when the ignition is switched ON or does not illuminate as indicated in the chart. For more details about this indicator light and this chart, refer to “Front passenger seat weight sensors” (page 2-61).

WARNING

Do not operate a vehicle with damaged air bag/seat belt pretensioner system components:

Expended or damaged air bag/seat belt pretensioner system components must be replaced after any collision which caused them to deploy or damage them. Only a trained Authorized Mazda Dealer can fully evaluate these systems to see that they will work in any subsequent accident. Driving with an expended or damaged air bag or pretensioner unit will not afford you the necessary protection in the event of any subsequent accident which could result in serious injury or death.

Do not remove interior air bag parts:

Removing any components such as the front seats, front dashboard, the steering wheel or parts on the front and rear window pillars and along the roof edge, containing air bag parts or sensors is dangerous. These parts contain essential air bag components. The air bag could accidentally activate and cause serious injuries. Always have an Authorized Mazda Dealer remove these parts.

Dispose of the air bag properly:

Improper disposal of an air bag or a vehicle with live air bags in it can be extremely dangerous. Unless all safety procedures are followed, injury can result. Ask an Authorized Mazda Dealer how to safely dispose of an air bag or how to scrap an air bag equipped vehicle.

NOTE

If it becomes necessary to have the components or wiring system for the supplementary restraint system modified to accommodate a person with certain medical conditions in accordance with a certified physician, contact an Authorized Mazda Dealer, refer to "Customer Assistance (U.S.A.)" (page 9-2).

3 Knowing Your Mazda

Explanation of basic operations and controls; opening/closing and adjustment of various parts.

Doors and Locks 3-2
Keys 3-2
Keyless Entry System 3-3
Door Locks 3-9
Liftgate 3-14
Power Windows 3-17
Fuel-Filler Lid and Cap 3-20
Hood 3-21
Moonroof* 3-23

Security System 3-25
Immobilizer System 3-25
Theft-Deterrent System* 3-29

Steering Wheel and Mirrors 3-32
Steering Wheel 3-32
Mirrors 3-32

*Some models.

Keys

WARNING

Do not leave the key in your vehicle with children and keep them in a place where your children will not find or play with them:

Leaving children in a vehicle with the key is dangerous. This could result in someone being badly injured or even killed. Children may find these new kinds of keys to be an interesting toy to play with and could cause the power windows or other controls to operate, or even make the vehicle move.

NOTE

- *Refer to Immobilizer System (page 3-25) for information regarding keys and engine starting.*
- ***(With theft-deterrent system)***
  Refer to Theft-Deterrent System (page 3-29) for information regarding keys and the prevention of vehicle and vehicle contents theft.

The keys operate all locks.

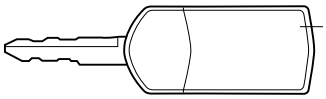

A code number is stamped on the plate attached to the key set; detach this plate and store it in a safe place (not in the vehicle) for use if you need to make a replacement key.

NOTE

- *Write down the code number and keep it in a separate, safe and convenient place, but not in the vehicle.*
  If your key is lost, consult your Authorized Mazda Dealer and have your code number ready.
- *Some types of key chains cannot be attached to the retractable type key. In this case, use the key ring provided with the transmitter which has the key code number plate attached.*

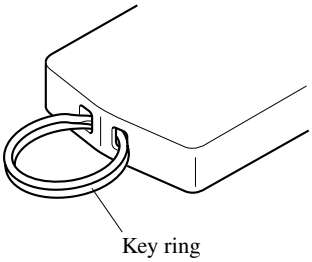

Key extend/retract method (Retractable type key)

To extend the key, press the release button.

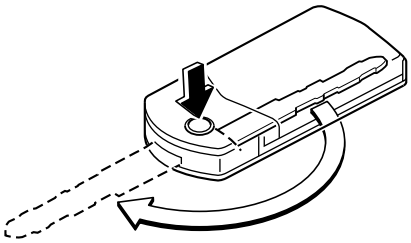

To retract the key, rotate it into the holder while pressing the release button.

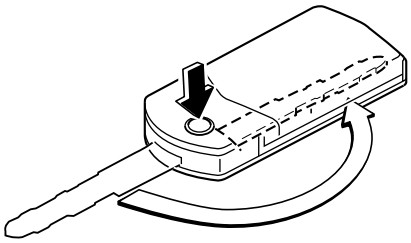

Keyless Entry System

This system remotely locks and unlocks the doors and the liftgate.
It can also help you signal for attention.
Press the buttons slowly and carefully.

CAUTION

To avoid damage to the transmitter, do not:

- *Drop the transmitter.*
- *Get the transmitter wet.*
- *Disassemble the transmitter.*
- *Expose the transmitter to any kind of magnetic field.*
- *Expose the transmitter to high temperatures on places such as the dashboard or hood, under direct sunlight.*

NOTE

- *The keyless entry system is designed to operate up to about 2.5 m (8 ft) from the center of the vehicle, but this may vary due to local conditions.*
- *The system does not operate when the key is in the ignition switch.*
- *If the transmitter does not operate when pressing a button or the operation range becomes too small, the battery may be dead. To install a new battery, refer to Maintenance (page 3-7).*
- *Additional transmitters can be obtained at an Authorized Mazda Dealer. Up to 3 transmitters can be used with the keyless entry system per vehicle. Bring all transmitters to an Authorized Mazda Dealer when additional transmitters are required.*

▼Transmitter

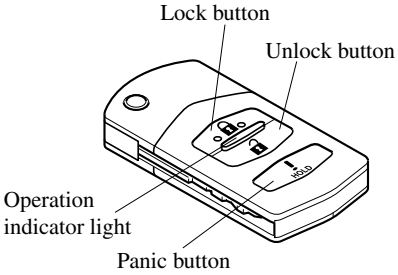

NOTE

- ***(U.S.A.)***
  This device complies with Part 15 of the FCC Rules. Operation is subject to the following two conditions: (1) this device may not cause harmful interference, and (2) this device must accept any interference received, including interference that may cause undesired operation.
- ***(CANADA)***
  This device complies with RSS-210 of Industry CANADA. Operation is subject to the following two conditions: (1) this device may not cause interference, and (2) this device must accept any interference, including interference that may cause undesired operation of the device.

The operation indicator light flashes when the buttons are pressed.

Lock button

To lock the doors and the liftgate, press the lock button and the hazard warning lights will flash once.

To confirm that all doors and the liftgate have been locked, press the lock button again within 5 seconds. If they are closed and locked, the horn will sound and the hazard warning lights will flash once.
The system can be set not to sound the horn.
Refer to Personalization Features on page 10-8.

NOTE

- *Doors and the liftgate can be locked by pressing the lock button while any other door or the liftgate is open. However, the hazard warning lights will not flash and the horn will not sound.*
- ***(Without theft-deterrent system)***
  The hazard warning lights will flash once to indicate that all doors and the liftgate are locked.
  (With theft-deterrent system)
  The hazard warning lights flash when the theft deterrent system is armed.
  The hazard warning lights do not flash if all the doors and the liftgate are locked before the theft-deterrent system is properly armed.
  When the doors are locked by pressing the lock button on the transmitter while the theft-deterrent system is armed, the hazard warning lights will flash once to indicate that the system is armed.
  Refer to Theft-Deterrent System on page 3-29.
- *The hazard warning lights can be set to not flash when the doors are locked or unlocked.*
  Refer to Personalization Features on page 10-8.
- *All doors and the liftgate cannot be locked when the key is in the ignition switch.*
- *Confirm that all doors and the liftgate are locked visually or audibly by use of the double click.*

Unlock button

To unlock the driver's door, press the unlock button and the hazard warning lights will flash twice.

To unlock all doors and the liftgate, press the unlock button again within 5 seconds and the hazard warning lights will flash twice.

NOTE

(Without theft-deterrent system)

The hazard warning lights will flash twice to indicate that all doors and the liftgate are unlocked.

(With theft-deterrent system)

The hazard warning lights flash when the theft deterrent system is turned off.

The hazard warning lights do not flash unless the theft deterrent system has been properly turned off.

When the doors are unlocked by pressing the unlock button on the transmitter while the theft-deterrent system is turned off, the hazard warning lights will flash twice to indicate that the system is turned off.

Refer to Theft-Deterrent System on page 3-29.

The system can be set to unlock all doors by performing a single operation.

Refer to Personalization Features on page 10-8.

NOTE

Auto re-lock function

After unlocking with the transmitter, all doors and the liftgate will automatically lock if one of the doors or the liftgate is not opened within about 30 seconds.

The time required for the doors to lock automatically can be changed.

Refer to Personalization Features on page 10-8.

Panic button

If you witness from a distance someone attempting to break into or damage your vehicle, pressing the panic button will activate the vehicle's alarm.

NOTE

The panic button will work whether any door or the liftgate is open or closed.

Turning on the alarm

Pressing the panic button for 1 second or more will trigger the alarm for about 2 minutes and 30 seconds, and the following will occur:

- The horn sounds intermittently.
- The hazard warning lights flash.

Turning off the alarm

Press any button on the transmitter.

Declaration of Conformity

Keyless entry system

(U.S.A)
FCC WARNING
Changes or modifications not expressly approved by the party responsible for compliance could void the user's authority to operate the equipment.
Note
*This device complies with Part 15 of the FCC Rules. Operation is subject to the following two conditions:
(1) this device may not cause harmful interference, and (2) this device must accept any interference received, including interference that may cause undesired operation.

(CANADA)
This device complies with RSS-210 of Industry CANADA. Operation is subject to the following two conditions: (1) this device may not cause interference, and (2) this device must accept any interference, including interference that may cause undesired operation of the device.

(MEXICO)
Este equipo opera a titulo secundario, consecuentemente, debe aceptar interferencias perjudiciales incluyendo equipos de la misma clase y puede no causar interferencias a sistemas operando a titulo primario

Sistema de acceso normal sin llave
Modelo : SKE125-01
Sistema de acceso normal sin llave con marcado de confirmación por radio

COFETEL RCPMASK05-615

▼Transmitter Maintenance

If the buttons on the transmitter are inoperable and the operation indicator light does not flash, the battery may be dead.
Replace with a new battery before the transmitter becomes unusable.

⚠ CAUTION

- *Install the battery with the positive pole (+) facing down. Battery leakage could occur if it is not installed correctly.*
- *When replacing the battery, be careful not to touch any of the internal circuitry and electrical terminals, bend the electrical terminals, or get dirt in the transmitter as the transmitter could be damaged.*
- *There is the danger of explosion if the battery is not correctly replaced.*
- *Replace only with the same type battery (CR1620 or equivalent).*
- *Dispose of used batteries according to the following instructions.*
  - *Insulate the plus and minus terminals of the battery using cellophane or equivalent tape.*
  - *Never disassemble.*
  - *Never throw the battery into fire and/or water.*
  - *Never deform or crush.*

Replacing the transmitter battery

1. Unfold the key (page 3-2).
2. Insert a screwdriver into the slot and push the tab to remove the key from the transmitter.

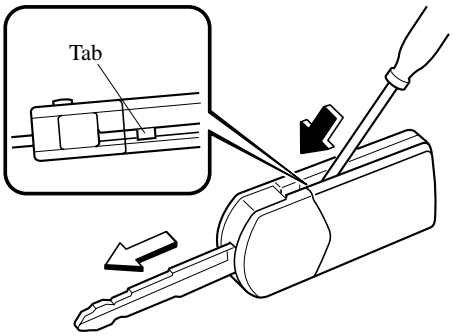

3. Insert a screwdriver into the slot and gently pry open the transmitter.

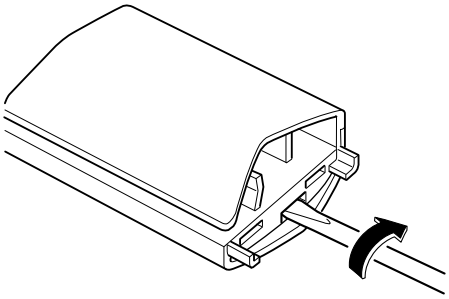

4. Remove the battery.

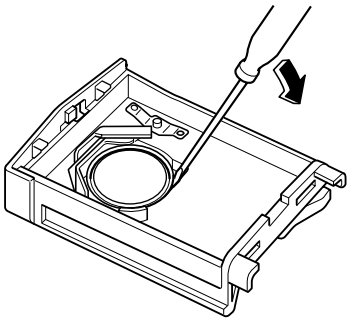

5. Put in the new battery (CR1620 or equivalent) with the positive pole (+) facing down.

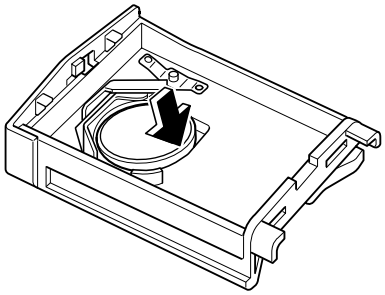

6. Align the front and back covers and snap the transmitter shut.
7. Align the key with the transmitter as shown in the figure, and insert the key until a click sound is heard.

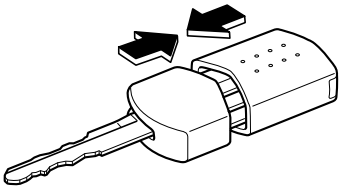

⚠ CAUTION

Insert the key into the transmitter securely until a click sound is heard. If it is not inserted securely, it could detach from the transmitter.

▼Service

If you have a problem with the keyless entry system, consult an Authorized Mazda Dealer.

If your transmitter is lost or stolen, consult an Authorized Mazda Dealer as soon as possible for a replacement and to make the lost or stolen transmitter inoperative.

⚠ CAUTION

Radio equipment like this is governed by laws in the United States. Changes or modifications not expressly approved by the party responsible for compliance could void the user's authority to operate the equipment.

Door Locks

WARNING

Always take all children and pets with you or leave a responsible person with them:

Leaving a child or a pet unattended in a parked vehicle is dangerous. In hot weather, temperatures inside a vehicle can become high enough to cause brain damage or even death.

Do not leave the key in your vehicle with children and keep them in a place where your children will not find or play with them:

Leaving children in a vehicle with the key is dangerous. This could result in someone being badly injured or even killed.

Keep all doors locked when driving:

Unlocked doors in a moving vehicle are dangerous. Passengers can fall out if a door is accidentally opened and can more easily be thrown out in an accident.

Always close all the windows and the moonroof, lock the doors and take the key with you when leaving your vehicle unattended:

Leaving your vehicle unlocked is dangerous as children could lock themselves in a hot vehicle, which could result in death. Also, a vehicle left unlocked becomes an easy target for thieves and intruders.

After closing the doors, always verify that they are securely closed:

Doors not securely closed are dangerous, if the vehicle is driven with a door not securely closed, the door could open unexpectedly resulting in an accident.

Always confirm the safety around the vehicle before opening a door:

Suddenly opening a door is dangerous. A passing vehicle or a pedestrian could be hit and cause an accident.

CAUTION

Always confirm the conditions around the vehicle before opening/closing the doors and use caution during strong winds or when parked on an incline. Not being aware of the conditions around the vehicle is dangerous because fingers could get caught in the door or a passing pedestrian could be hit, resulting in an unexpected accident or injury.

▼Locking, Unlocking with Key

The driver's door can be locked/unlocked with the key.
Turn the key toward the front to unlock, toward the back to lock.

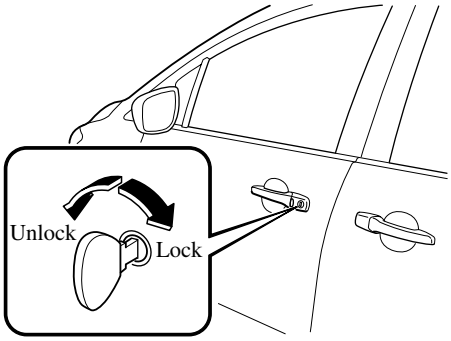

▼Locking, Unlocking with Transmitter

The doors can be locked/unlocked by operating the keyless entry system transmitter, refer to Keyless Entry System (page 3-3).

▼Locking, Unlocking with Door-Lock Knob

Front doors

To lock either front door from the inside, push the door-lock knob.
To unlock, pull it out.

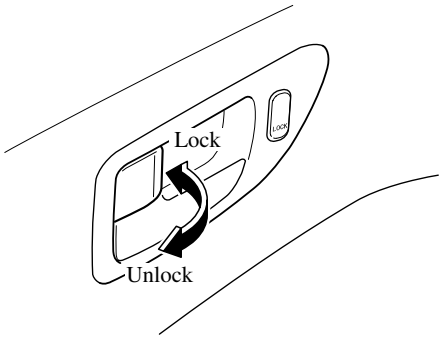

To lock either front door with the door-lock knob from the outside, push the door-lock knob to the lock position and close the door (pulling the door handle is not required).

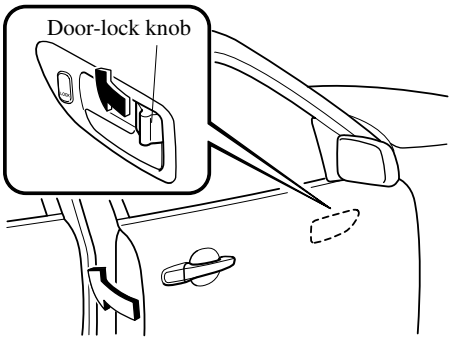

NOTE
When locking the doors using the door-lock knob from the outside, be careful not to leave the key inside the vehicle.

Sliding doors

To lock a sliding door from the inside, slide the door-lock knob toward the front.
To unlock, slide it toward the back.

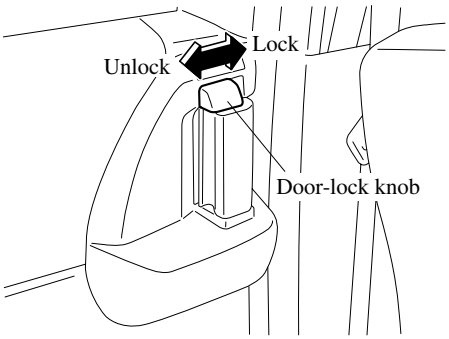

To lock a sliding door with the door-lock knob from the outside, slide the door-lock knob toward the front to the lock position and close the door (pulling the door handle is not required).

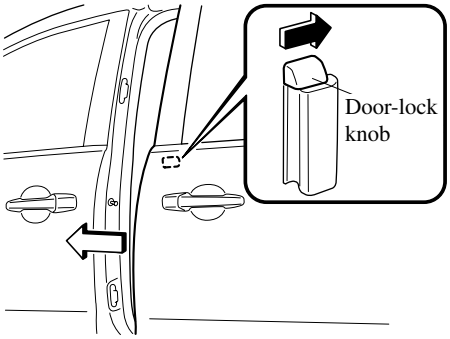

▼Power Door Locks

Vehicle lock-out prevention

The vehicle lock-out prevention feature prevents you from locking yourself out of the vehicle. With the key in the ignition switch, all doors and the liftgate will automatically unlock if they are locked using the power door locks with any door or the liftgate open.

Locking, unlocking with key

All doors and the liftgate lock automatically when the driver's door is locked with the key.
All doors and the liftgate unlock when the driver's door is unlocked and the key is held in the unlock position for one second or longer.

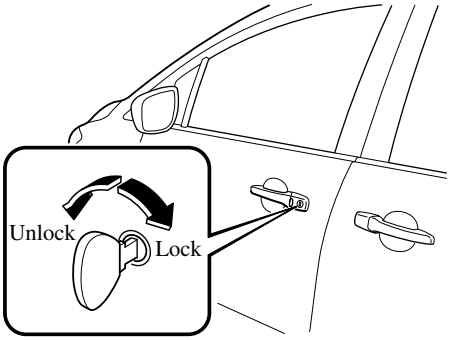

NOTE

- *Holding the key in the unlocked position in the driver's door lock for about a second unlocks all doors and the liftgate. To unlock only the driver's door, insert the key into the driver's door lock and turn the key briefly to the unlock position and then immediately return it to the center position.*
- *The system can be set to unlock all doors by performing a single operation.*
  Refer to Personalization Features on page 10-8.

Locking, unlocking with door-lock switch

All doors and the liftgate lock automatically when LOCK is pressed. They all unlock when the unmarked part of the door-lock switch is pressed.

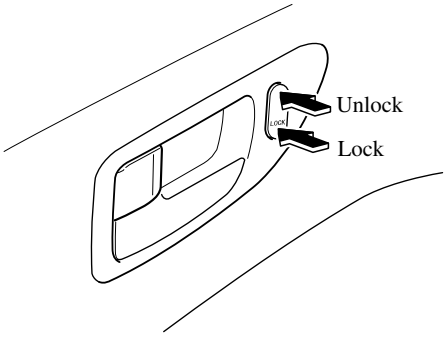

Locking, unlocking with transmitter

All doors and the liftgate can be locked/unlocked by operating the keyless entry system transmitter, refer to Keyless Entry System (page 3-3).

▼Sliding Door Open/Close

⚠ WARNING

Do not leave a sliding door open while parked on an incline:

Leaving a sliding door open is dangerous. The door may open unexpectedly resulting in injury.

⚠ CAUTION

When opening/closing a sliding door, follow the cautions below. If the cautions are not heeded, hands, feet, or even a head may be caught in a door resulting in an injury.

- *Use the door handle.*
- *Keep your hands, feet, and head away from the sliding door openings.*
- *Make sure that there is nothing behind the sliding doors.*
- *Keep your hands and feet away from the sliding door rails, arms and pillars.*

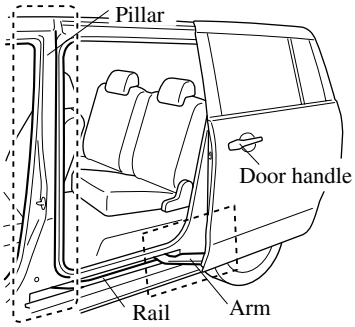

NOTE

When you leave the vehicle, stop the engine and lock the doors. And do not put valuables in your vehicle to prevent theft.

Opening/closing from inside

To open, pull the inner door handle toward the back.
To close, push the inner door handle toward the front.

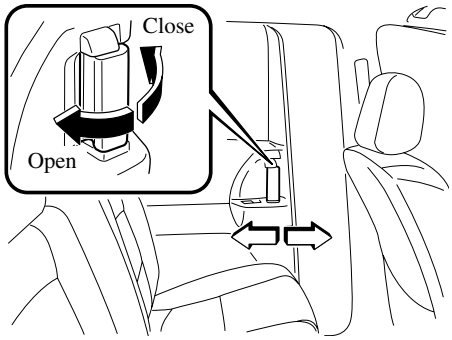

Opening/closing from outside

Pull the outer door handle and slide the door.

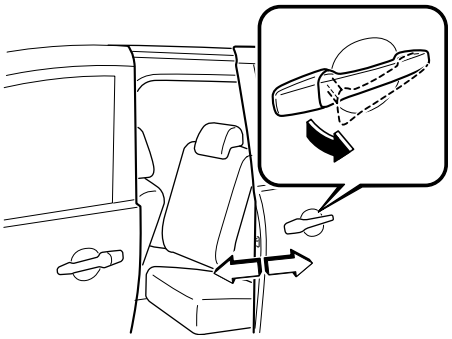

NOTE
The right sliding door cannot fully open when the fuel-filler lid is open. Close the fuel filler lid before opening the sliding door.

NOTE
When closing the sliding door from the fully-opened position and from outside the vehicle, pull the outside door handle outward to release the latch, and slide the door toward the front.

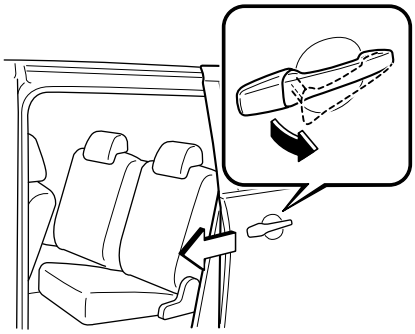

▼Rear Door Child Safety Locks

These locks are intended to help prevent children from accidentally opening the sliding doors. Use them both whenever a child rides in the vehicle.

If you slide the child safety lock to the lock position before closing that door, the door cannot be opened from the inside. The door can be opened only by pulling the outside handle.

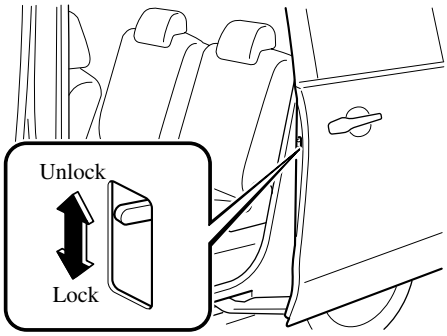

Liftgate

WARNING

Never allow a person to ride in the luggage compartment:

Allowing a person to ride in the luggage compartment is dangerous. The person in the luggage compartment could be seriously injured or killed during sudden braking or a collision.

Do not drive with the liftgate open:

Exhaust gas in the cabin of a vehicle is dangerous. An open liftgate in a moving vehicle will cause exhaust gas to be drawn into the cabin. This gas contains CO (carbon monoxide), which is colorless, odorless, and highly poisonous, and it can cause loss of consciousness and death. Moreover, an open liftgate could cause occupants to fall out in an accident.

Do not stack or leave loaded luggage unsecured in the luggage compartment:

Otherwise, the luggage may move or collapse, resulting in injury or an accident. In addition, do not load luggage higher than the seatbacks. It may affect the side or rear field of view.

CAUTION

- *Before opening the liftgate, remove any snow and ice accumulation on it. Otherwise, the liftgate could close under the weight of the snow and ice resulting in injury.*
- *Be careful when opening/closing the liftgate during strong winds. If a strong gust blows against the liftgate, it could close suddenly resulting in injury.*
- *Fully open the liftgate and make sure that it stays open. If the liftgate is only opened partially, it could slam shut by vibration or wind gusts resulting in injury.*
- *When loading or unloading luggage in the luggage compartment, turn off the engine. Otherwise, you could get burned by the heat of the exhaust gas.*
- *Be careful not to apply excessive force to the damper stay on the liftgate such as by putting your hand on the stay. Otherwise, the damper stay may bend and affect the liftgate operation.*

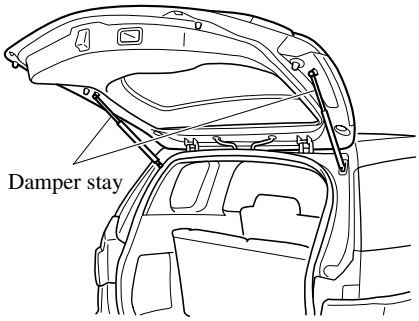

▼Locking, Unlocking with Key

The liftgate can be locked/unlocked by inserting the key into the driver's door key cylinder, refer to Power Door Locks (page 3-11).

▼Locking, Unlocking with Transmitter

The liftgate can be locked/unlocked by operating the keyless entry system transmitter, refer to Keyless Entry System (page 3-3).

▼Locking, Unlocking with Door-Lock Switch

The liftgate can be locked/unlocked by operating the door-lock switch, refer to Power Door Locks (page 3-11).

▼Opening and Closing the Liftgate

Opening the liftgate

Grasp the lower end of the liftgate, press the electric liftgate opener on the liftgate, and then raise the liftgate when the latch releases.

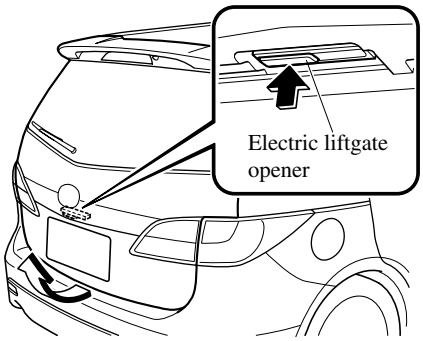

While the ignition is switched ON, the liftgate can be opened only when the vehicle is stopped with the parking brake applied (manual transaxle), or with the selector lever in the P position (automatic transaxle).

NOTE

- *When the liftgate latch is released by pressing the electric liftgate opener button, the liftgate raises slightly to allow it to be opened. If the liftgate is not operated for a certain period of time after the electric liftgate opener button has been pressed, the liftgate cannot be raised any more from its slightly raised position. Press the electric liftgate opener button again to fully open the liftgate. To close the liftgate from its slightly raised position, open it first by pressing the electric liftgate opener button and wait for 1 second or longer, then close it.*
  If the liftgate is not fully closed, the driver is notified by a warning indicated in the instrument cluster.
- *The sound of the latch may be heard for a few seconds after the electric liftgate opener has been pressed, however, this does not indicate a malfunction.*

When the liftgate cannot be opened

If the vehicle battery is dead or there is a malfunction in the electrical system and the liftgate cannot be unlocked, perform the following procedure as an emergency measure to unlock it:

1. Remove the cap on the interior surface of the liftgate with a flathead screwdriver.

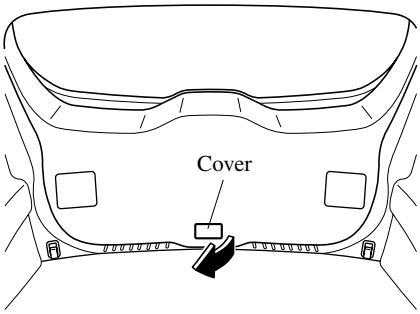

2. Turn the lever to the right to unlock the liftgate.

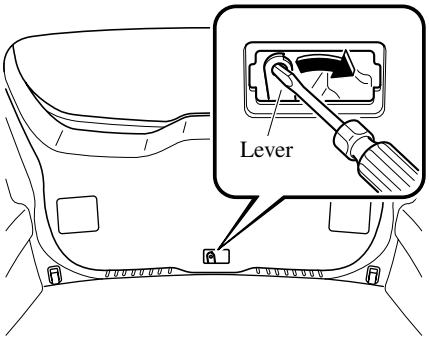

After performing this emergency measure, have the vehicle inspected at an Authorized Mazda Dealer as soon as possible.

Closing the liftgate

To close, lower the liftgate slowly using the liftgate grip recess, and then push the liftgate closed using both hands.
Do not slam it. Pull up on the liftgate to make sure it is secure.

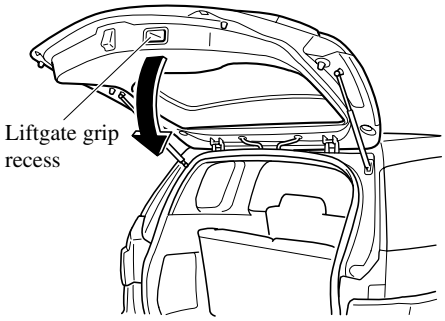

Power Windows

The ignition must be switched ON for the power windows to operate.

⚠ WARNING

Make sure the opening is clear before closing a window:

Closing power windows are dangerous. A person's hands, head, or even neck could be caught by the window and result in serious injury or even death.
This warning applies especially to children.

Never allow children to play with power window switches:

Power window switches that are not locked with the power window lock switch would allow children to operate power windows unintentionally which could result in serious injury if a child's hands, head or neck becomes caught by the window.

⚠ CAUTION

To prevent burning out the fuse and damaging the power window system, do not open or close more than three windows at once.

▼Operating the Driver's Side Power Window

Normal opening/closing

To open the window to the desired position, lightly hold down the switch.
To close the window to the desired position, lightly pull up the switch.

Master control switches

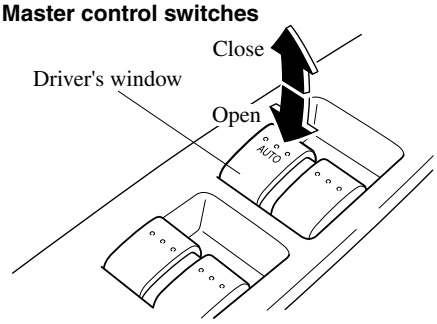

Auto-opening/closing

To fully open the window automatically, press the switch completely down, then release. The window will fully open automatically.
To fully close the window automatically, pull the switch completely up, then release. The window will fully close automatically.

To stop the window partway, pull or press the switch in the opposite direction and then release it.

Power window system initialization procedure

If the battery was disconnected during vehicle maintenance, or for other reasons (such as a switch continues to be operated after the window is fully open/closed), the window will not fully open and close automatically. Carry out the following procedure to resume operation:

1. Switch the ignition ON.
2. Press the switch and fully open the window.
3. Pull up the switch to fully close the window and continue holding the switch for about 2 seconds after the window fully closes.

Two-step down function

With the window completely closed, press the switch lightly and the window will open and stop about 3 cm (1 in) from the top.
If you continue to press and hold the switch, the window will resume opening all the way.

NOTE

- *Pressing the power window switch once when the window is fully closed will only open it about 3 cm (1 in) to allow convenient ventilation of the cabin.*
- *The two-step down function can be canceled.*
  Refer to Personalization Features on page 10-8.

Jam-safe window

If a person's hands, head or an object blocks the window during the auto-closing operation, the window will stop and open halfway.

WARNING

Make sure nothing blocks the window just before it reaches the fully closed position or while fully holding up the power window switch:

Blocking the power window just before it reaches the fully closed position or while fully holding up the power window switch is dangerous. In this case, the jam-safe function cannot prevent the window from closing all the way. If fingers are caught, serious injuries could occur.

NOTE

Depending on driving conditions, a closing power window could stop and start opening when the window feels a shock that is similar to something blocking it.
In the event the jam-safe function activates and the power window cannot be closed automatically, pull and hold the switch and the window will close.

Engine-off power window operation

The power window can be operated for about 40 seconds after the ignition is switched from ON to ACC or OFF with all doors closed. If any door is opened, the power window will be inoperable.

NOTE

- *For engine-off operation of the power window, the switch must be held up firmly throughout window closure because the auto-closing function will be inoperable.*
- *The two-step down function is inoperable during engine-off operation.*

▼Operating the Passenger Power Windows

The power windows may be operated when the power window lock switch on the driver's door is in the unlocked position.

The passenger windows may be opened or closed using the master control switches on the driver's door.

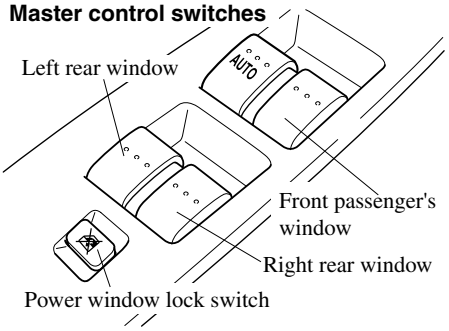

To open the window to the desired position, hold down the switch.
To close the window to the desired position, pull up the switch.

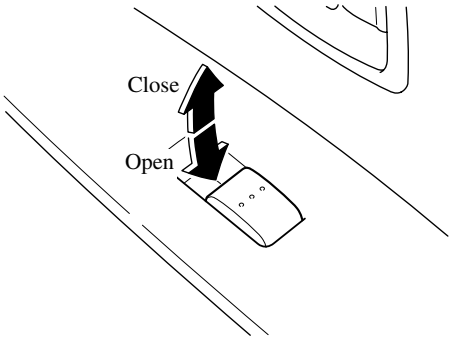

▼Power Window Lock Switch

This feature prevents all power windows from operating, except the driver's power window. Keep this switch in the locked position while children are in the vehicle.
Locked position (button depressed):
Only the driver's power window can be operated.
Unlocked position (button not depressed):
All power windows on each door can be operated.

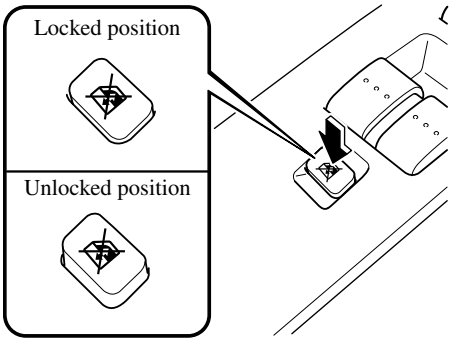

Fuel-Filler Lid and Cap

⚠ WARNING

When removing the fuel-filler cap, loosen the cap slightly and wait for any hissing to stop. Then remove it:

Fuel spray is dangerous. Fuel can burn skin and eyes and cause illness if ingested. Fuel spray is released when there is pressure in the fuel tank and the fuel-filler cap is removed too quickly.

Before refueling, stop the engine, and always keep sparks and flames away from the filler neck:

Fuel vapor is dangerous. It could be ignited by sparks or flames causing serious burns and injuries. Additionally, use of the incorrect fuel-filler cap or not using a fuel-filler cap may result in fuel leak, which could result in serious burns or death in an accident.

Do not continue refueling after the fuel pump nozzle shuts off automatically:

Continuing to add fuel after the fuel pump nozzle has shut off automatically is dangerous because overfilling the fuel tank may cause fuel overflow or leakage. Fuel overflow and leakage could damage the vehicle and if the fuel ignites it could cause a fire and explosion resulting in serious injury or death.

⚠ CAUTION

Always use only a genuine Mazda fuel-filler cap or an approved equivalent, available at an Authorized Mazda Dealer. The wrong cap can result in a serious malfunction of the fuel and emission control systems. It may also cause the check engine light in the instrument cluster to illuminate.

▼Fuel-Filler Lid

To open, pull up the remote fuel-filler lid release.

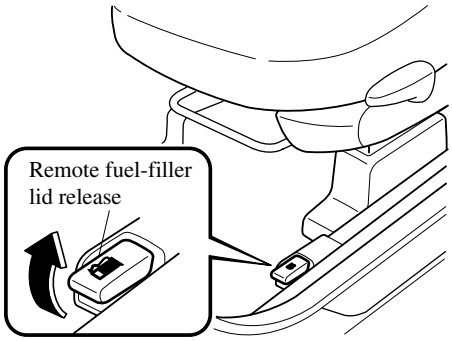

NOTE

The fuel-filler lid cannot be opened when the right-side sliding door is open. Close the sliding door to open the fuel-filler lid.

▼Fuel-Filler Cap

To remove the fuel-filler cap, turn it counterclockwise.
Attach the removed cap to the inner side of the fuel lid.

To close the fuel-filler cap, turn it clockwise until a click is heard.

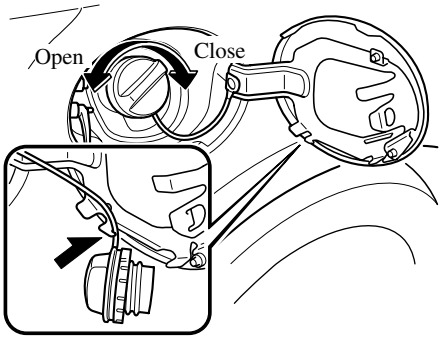

CAUTION

Make sure the fuel-filler cap is tightened securely. The check engine light may illuminate when the cap is not tightened securely. If the light remains on (even after you have tightened the cap securely, driven, and restarted the engine several times), it may indicate a different problem. Contact an Authorized Mazda Dealer as soon as possible.

Hood

WARNING

Always check that the hood is closed and securely locked:

A hood that is not closed and securely locked is dangerous as it could fly open while the vehicle is moving and block the driver's vision which could result in a serious accident.

▼Opening the Hood

1. With the vehicle parked, pull the release handle to unlock the hood.

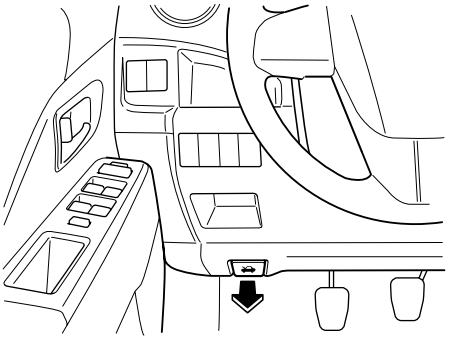

2. Insert your hand into the hood opening, slide the hood latch lever, and lift the hood.

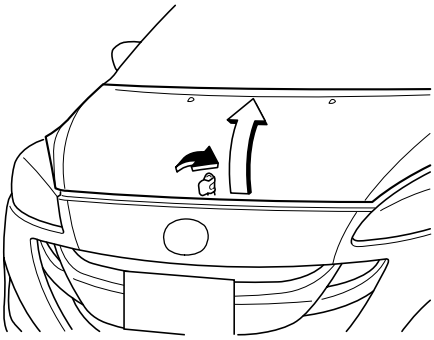

3. Grasp the support rod in the padded area and secure it in the support rod hole indicated by the arrow to hold the hood open.

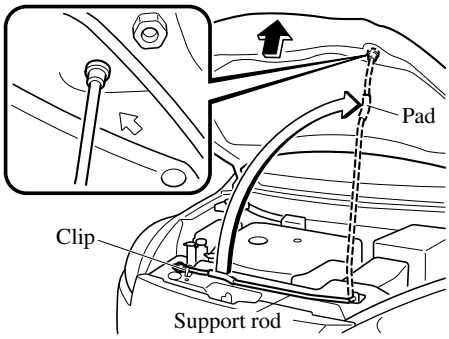

▼Closing the Hood

1. Check under the hood area to make certain all filler caps are in place and all loose items (e.g. tools, oil containers, etc.) have been removed.
2. Lift the hood, grasp the padded area on the support rod, and secure the support rod in the clip. Verify that the support rod is secured in the clip before closing the hood.

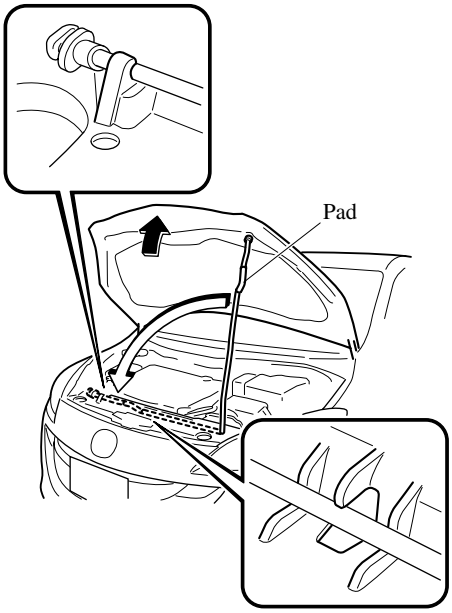

3. Lower the hood slowly to a height of about 20 cm (7.9 in) above its closed position and then let it drop.

⚠ CAUTION

When closing the hood, do not push it excessively such as by applying your weight. Otherwise, the hood could be deformed.

Moonroof*

The moonroof can be opened or closed electrically only when the ignition is switched ON.

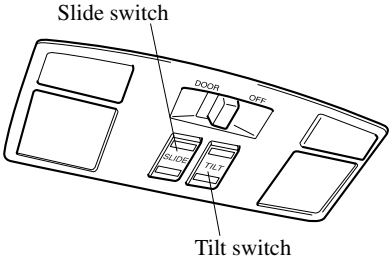

⚠ WARNING

Do not let passengers stand up or extend part of their body through the open moonroof while the vehicle is moving:

Extending the head, arms, or other parts of the body through the moonroof is dangerous. The head or arms could hit something while the vehicle is moving. This could cause serious injury or death.

Make sure the opening is clear before closing the moonroof:

A closing moonroof is dangerous. The hands, head, or even neck of a person, especially a child, could be caught in it as it closes, causing serious injury or even death.

NOTE

Before washing your Mazda, make sure the moonroof is completely closed so that water does not get inside the cabin area. After washing your Mazda or after it rains, wipe the water off the moonroof before operating it to avoid water penetration which could cause rust and water damage to your headliner.

▼Tilt Operation

The rear of the moonroof can be tilted open to provide more ventilation.

To fully tilt automatically, momentarily press the rear of the tilt switch.
To stop tilting partway, press any part of the tilt or slide switch.

To close to the desired position, press the front of the tilt or slide switch.

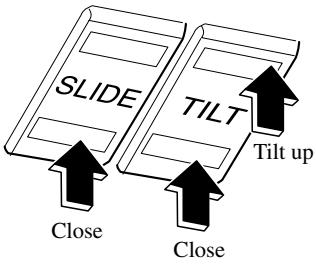

▼Slide Operation

To fully open automatically, momentarily press the rear of the slide switch.
To stop sliding partway, press any part of the tilt or slide switch.

*Some models.

To close to the desired position, press the front of the tilt or slide switch.

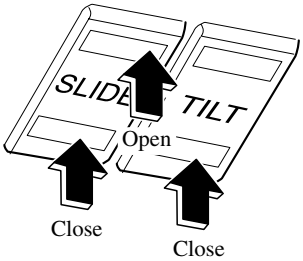

▼Power Moonroof Re-set Procedure

If the battery is disconnected, the moonroof will not operate. The moonroof will not operate correctly until it is re-set. Carry out the following procedure to re-set the moonroof and resume operation:

1. Switch the ignition ON.
2. Press and hold the front of the SLIDE switch with the moonroof closed completely. The moonroof lowers slightly and returns to its original position when the re-setting is finished.

NOTE
Re-set cannot be performed with the moonroof open. Close the moonroof completely before re-setting.

▼Sunshade

The sunshade can be opened and closed by hand.

The sunshade opens automatically when the moonroof is opened, but must be closed by hand.

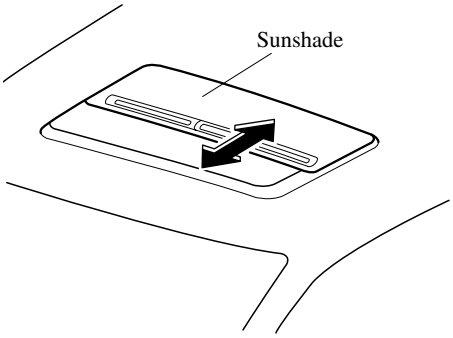

⚠ CAUTION

- *The sunshade does not tilt. To avoid damaging the sunshade, do not push up on it.*
- *Do not close the sunshade while the moonroof is opening. Trying to force the sunshade closed could damage it.*

Immobilizer System

The immobilizer system allows the engine to start only with a key the system recognizes.

If someone attempts to start the engine with an unrecognized key, the engine will not start, thereby helping to prevent the theft of your vehicle.
If you have a problem with the immobilizer system or the key, consult an Authorized Mazda Dealer.

CAUTION

- *Radio equipment like this is governed by laws in the United States.*
  Changes or modifications not expressly approved by the party responsible for compliance could void the user's authority to operate the equipment.
- *To avoid damage to the key, do not:*
  - *Drop the key.*
  - *Get the key wet.*
  - *Expose the key to any kind of magnetic field.*
  - *Expose the key to high temperatures on places such as the dashboard or hood, under direct sunlight.*

CAUTION

When starting the engine do not allow the following, as the engine may not start due to the electronic signal from the ignition key not being transmitted correctly.

- *A key ring rests on the key grip.*

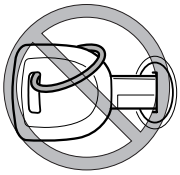

- *Metal parts of other keys or metal objects touch the key grip.*

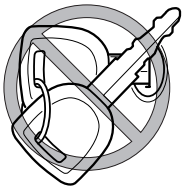

- *Spare keys or keys for other vehicles equipped with an immobilizer system touch or come near the key grip.*

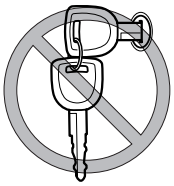

- *Devices for electronic purchases, or security passage which touch or come near the key.*

NOTE

- *The keys carry a unique electronic code. For this reason, and to assure your safety, obtaining a replacement key requires some waiting time. They are only available through an Authorized Mazda Dealer.*
- *Always keep a spare key, in case one is lost. If a key is lost, contact an Authorized Mazda Dealer as soon as possible.*
- *If you lose a key, an Authorized Mazda Dealer will reset the electronic codes of your remaining keys and immobilizer system. Bring all the remaining keys to an Authorized Mazda Dealer to reset. Starting the vehicle with a key that has not been reset is not possible.*

Declaration of Conformity

Immobilizer system

(U.S.A)
FCC WARNING
Changes or modifications not expressly approved by the party responsible for compliance could void the user's authority to operate the equipment.
Note
*This device complies with Part 15 of the FCC Rules. Operation is subject to the following two conditions:
(1) this device may not cause harmful interference, and (2) this device must accept any interference received, including interference that may cause undesired operation.

(CANADA)
This device complies with RSS-210 of Industry CANADA. Operation is subject to the following two conditions: (1) this device may not cause interference, and (2) this device must accept any interference, including interference that may cause undesired operation of the device.

(MEXICO)
Este equipo opera a titulo secundario, consecuentemente, debe aceptar interferencias perjudiciales incluyendo equipos de la misma clase y puede no causar interferencias a sistemas operando a titulo primario

Sistema inmovilizador
Modelo : IMB111-01
Sistema inmovilizador con marcado de confirmación por radio

COFETEL RCPMAIM05-616

Security System

▼Operation

Arming

The system is armed when the ignition is switched from ON to ACC or OFF.
The security indicator light in the instrument cluster flashes every two seconds until the system is disarmed.

Disarming

The system is disarmed when the ignition is switched ON with the correct ignition key.
The security indicator light illuminates for about three seconds and goes out.

If the engine does not start with the correct ignition key, and the security indicator light keeps illuminating or flashing, the system may have a malfunction. Consult an Authorized Mazda Dealer.

NOTE

- *If the security indicator light illuminates and stays on or flashes when the ignition is switched ON, the engine will not start.*
- *Signals from a TV or radio station, or from a transceiver or a mobile telephone, could interfere with your immobilizer system. If you are using the proper key and your engine fails to start, check the security indicator light. If it is flashing, remove the ignition key and wait 2 seconds or more, then reinsert it and try starting the engine again. If it does not start after 3 or more tries, contact an Authorized Mazda Dealer.*
- *If the security indicator light flashes continuously while you are driving, do not shut off the engine. Go to an Authorized Mazda Dealer and have it checked. If you shut off the engine while the light is flashing you will not be able to restart it.*
- *Since the electronic codes are reset when repairing the immobilizer system, the keys are needed. Bring all the existing keys to an Authorized Mazda Dealer.*

▼Modification and Add-On Equipment

Mazda cannot guarantee the immobilizer system's operation if the system has been modified or if any add-on equipment has been installed.

⚠ CAUTION

To avoid damage to your vehicle, do not modify the system or install any add-on equipment to the immobilizer system or the vehicle.

Theft-Deterrent System*

If the theft deterrent system detects an inappropriate entry into the vehicle, which could result in the vehicle or its contents being stolen, the alarm alerts the surrounding area of an abnormality by sounding the horn and flashing the hazard warning lights.
Refer to Operation on page 3-29.

NOTE
- *The theft-deterrent system operates with the key or the keyless entry system transmitter.*
- *The system will not function unless it is properly armed. To properly secure the vehicle, always make sure all windows are completely closed and all doors and the liftgate are locked before leaving the vehicle. Remember to take your key and transmitter.*

▼Operation

System triggering conditions

The horn sounds intermittently and the hazard warning lights flash for about 30 seconds when the system is triggered by any one of the following:
- Forcing open a door, the hood or the liftgate.
- Unlocking a door with the inside door-lock knob.
- Unlocking a door with the door lock switch.
- Opening the hood by operating the hood release handle.
- Switching the ignition ON without the key.

If the system is triggered again, the lights and horn will activate until a door or the liftgate is unlocked with the key or with the transmitter.

NOTE
If the battery goes dead while the theft-deterrent system is armed, the horn will activate and the hazard warning lights will flash when the battery is charged or replaced.

▼How to Arm the System

1. Close the windows and the moonroof* securely.
2. Remove the key from the ignition switch.
3. Make sure all the windows, the moonroof*, and the hood are closed. Close and lock all doors and the liftgate from the outside using the key or press the lock button on your keyless entry system transmitter.
   The hazard warning lights will flash once.
   The following method will also arm the theft-deterrent system:
   Close the hood and the liftgate. Press the area on the door-lock switch marked “LOCK” once. Close all doors.

   The security indicator light in the instrument panel flashes twice per second for 20 seconds.

The theft deterrent system can also be armed by activating the auto re-lock function with all the doors, the liftgate and the hood closed.

NOTE
Locking the doors with the inside door-lock knob will not arm the system.

*Some models.

4. After 20 seconds, the system is fully armed.

NOTE

- ***Auto re-lock function***
  After unlocking with the transmitter, all doors and the liftgate will automatically lock if one of the doors or the liftgate is not opened within about 30 seconds.
- *The system will disarm if one of the following operations takes place within 20 seconds after closing the hood and locking all the doors and the liftgate:*
  - *Pressing the unlock button on the transmitter.*
  - *Any door or the liftgate is opened.*
  - *Unlocking a door with the inside door-lock knob.*
  - *Unlocking a door with the door lock switch.*
  - *Unlocking the driver's door with the key.*
  - *The hood is opened.*
  - *The key is inserted in the ignition switch.*
  - *The ignition is switched ON.*

  To rearm the system, do the arming procedure again.
- *When the doors are locked by pressing the lock button on the transmitter or using the key while the theft-deterrent system is armed, the hazard warning lights will flash once to indicate that the system is armed.*
- *The method for setting the theft-deterrent system can be changed.*
  Refer to Personalization Features on page 10-8.

▼To Turn off an Armed System

An armed system can be turned off by any one of the following methods:

- Unlock the driver's door with the key.
- Press the unlock button on the keyless entry system transmitter.
- Insert the key into the ignition switch and switch the ignition ON.

The hazard warning lights will flash twice to indicate that the system is turned off.

NOTE

When the doors are unlocked by pressing the unlock button on the transmitter or using the key while the theft-deterrent system is turned off, the hazard warning lights will flash twice to indicate that the system is turned off.

▼To Stop an Alarm

A triggered alarm can be turned off by any one of the following methods:

- Unlock the driver's door with the key.
- Press the unlock button on the keyless entry system transmitter.
- The engine is started with the ignition key.

NOTE

If you have any problem with the theft-deterrent system, consult an Authorized Mazda Dealer.

▼Modification and Add-On Equipment

Mazda cannot guarantee the theft-deterrent system's operation if the system has been modified or if any add-on equipment has been installed.

⚠ CAUTION

To avoid damage to your vehicle, do not modify the system or install any add-on equipment to the theft-deterrent system or the vehicle.

▼Theft-Deterrent Labels

A label indicating that your vehicle is equipped with a Theft-Deterrent System is in the glove compartment.

Mazda recommends that you affix it to the lower rear corner of a front door window.

Steering Wheel and Mirrors

Steering Wheel

WARNING

Never adjust the steering wheel while the vehicle is moving:

Adjusting the steering wheel while the vehicle is moving is dangerous. Moving it can very easily cause the driver to abruptly turn to the left or right. This can lead to loss of control or an accident.

▼Steering Wheel Adjustment

To change the angle or length of the steering wheel:

1. Stop the vehicle, pull up the lock release lever under the steering column.

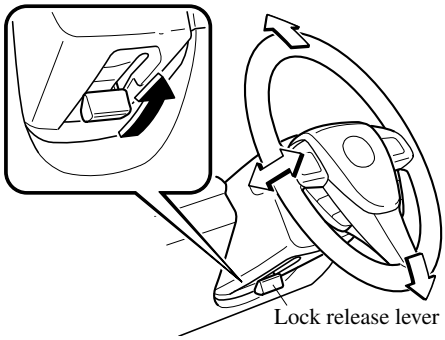

2. Tilt the steering wheel and/or adjust the steering column length to the desired positions, push the lever down to lock the column.
3. Push the wheel up and down to be certain it's locked before driving.

Mirrors

▼Outside Mirrors

Check the mirror angles before driving.

Mirror type

Flat type (driver's side)
Flat surface mirror.
Convex type (front passenger side)
The mirror has single curvature on its surface.

WARNING

Be sure to look over your shoulder before changing lanes:

Changing lanes without taking into account the actual distance of the vehicle in the convex mirror is dangerous. You could have a serious accident. What you see in the convex mirror is closer than it appears.

Power mirror

The ignition must be switched to ACC or ON.

To adjust:

1. Press the left or right side of the selector switch to choose the left or right side mirror.

2. Depress the mirror switch in the appropriate direction.

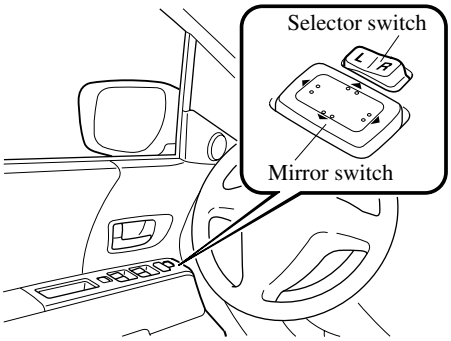

After adjusting the mirror, lock the control by placing the selector switch in the center position.

Folding the mirror

Fold the outside mirror rearward until it is flush with the vehicle.

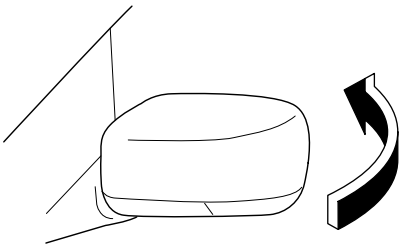

WARNING

Always return the outside mirrors to the driving position before you start driving:

Driving with the outside mirrors folded in is dangerous. Your rear view will be restricted, and you could have an accident.

▼Rearview Mirror

Rearview mirror adjustment

Before driving, adjust the rearview mirror to center on the scene through the rear window.

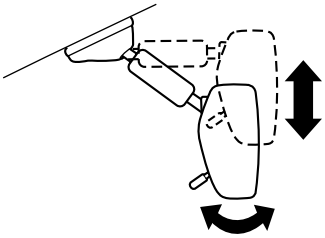

Reducing glare from headlights

Adjust the mirror with the day/night lever in the day position.

Push the lever forward for day driving. Pull it back to reduce glare from headlights.

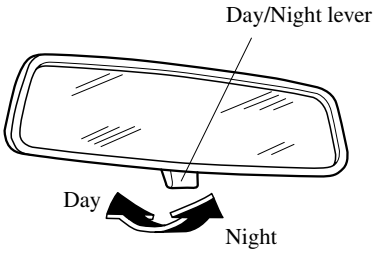

WARNING

Do not stack cargo or objects higher than the seatbacks:

Cargo stacked higher than the seatbacks is dangerous. It can block your view in the rearview mirror, which might cause you to hit another car when changing lanes.

4 Before Driving Your Mazda

Important information about driving your Mazda.

Fuel and Engine Exhaust Precautions 4-2
Fuel Requirements 4-2
Emission Control System 4-3
Engine Exhaust (Carbon Monoxide) 4-4

Before Starting the Engine 4-5
Before Getting In 4-5
After Getting In 4-5

Driving Tips 4-6
Break-In Period 4-6
Saving Fuel and Protection of the Environment 4-6
Hazardous Driving 4-7
Floor Mat 4-7
Rocking the Vehicle 4-8
Winter Driving 4-8
Driving In Flooded Area 4-10
Overloading 4-10
Driving on Uneven Road 4-11

Towing 4-12
Trailer Towing 4-12

Form No.8DW4-EC-14H

Fuel and Engine Exhaust Precautions

Fuel Requirements

Vehicles with catalytic converters or oxygen sensors must use ONLY UNLEADED FUEL, which will reduce exhaust emissions and keep spark plug fouling to a minimum.

Your Mazda will perform best with fuel listed in the table.

Fuel	Octane Rating* (Anti-knock index)
Regular unleaded fuel	87 [(R+M)/2 method] or above (91 RON or above)

* U.S. federal law requires that octane ratings be posted on gasoline station pumps.

Fuel with a rating lower than 87 octane (91 RON) could cause the emission control system to lose effectiveness. It could also cause engine knocking and serious engine damage.

CAUTION

- *USE ONLY UNLEADED FUEL.*
  Leaded fuel is harmful to the catalytic converter and oxygen sensors and will lead to deterioration of the emission control system and or failures.
- *Your vehicle can only use oxygenated fuels containing no more than 10 % ethanol by volume. Damage to your vehicle may occur when ethanol exceeds this recommendation, or if the gasoline contains any methanol. Stop using gasohol of any kind if your vehicle engine is performing poorly.*
- *Never add fuel system additives. Otherwise, the emission control system could be damaged. Consult an Authorized Mazda Dealer for details.*

Gasoline blended with oxygenates such as alcohol or ether compounds are generally referred to as oxygenated fuels. The common gasoline blend that can be used with your vehicle is ethanol blended at no more than 10%. Gasoline containing alcohol, such as ethanol or methanol, may be marketed under the name “Gasohol”.

Vehicle damage and drivability problems resulting from the use of the following may not be covered by the Mazda warranty.
- Gasohol containing more than 10% ethanol.
- Gasoline or gasohol containing methanol.
- Leaded fuel or leaded gasohol.

Emission Control System

Your vehicle is equipped with an emission control system (the catalytic converter is part of this system) that enables your vehicle to comply with existing exhaust emissions requirements.

WARNING

Never park over or near anything flammable:

Parking over or near anything flammable, such as dry grass, is dangerous. Even with the engine turned off, the exhaust system remains very hot after normal use and could ignite anything flammable. A resulting fire could cause serious injury or death.

CAUTION

Ignoring the following precautions could cause lead to accumulate on the catalyst inside the converter or cause the converter to get very hot. Either condition will damage the converter and cause poor performance.

- *USE ONLY UNLEADED FUEL.*
- *Do not drive your Mazda with any sign of engine malfunction.*
- *Do not coast with the ignition switched off.*
- *Do not descend steep grades in gear with the ignition switched off.*
- *Do not operate the engine at high idle for more than 5 minutes.*
- *Do not tamper with the emission control system. All inspections and adjustments must be made by a qualified technician.*
- *Do not push-start or pull-start your vehicle.*

NOTE

Under U.S. federal law, any modification to the original-equipment emission control system before the first sale and registration of a vehicle is subject to penalties. In some states, such modification made on a used vehicle is also subject to penalties.

NOTE

While the engine is off, the sound of a valve opening and closing can be heard at the middle rear of the vehicle, however this does not indicate an abnormality. Your vehicle has a self-checking device and it operates while the engine is off.

Fuel and Engine Exhaust Precautions

Engine Exhaust (Carbon Monoxide)

WARNING

Do not drive your vehicle if you smell exhaust gas inside the vehicle:

Engine exhaust gas is dangerous. This gas contains carbon monoxide (CO), which is colorless, odorless, and poisonous. When inhaled, it can cause loss of consciousness and death. If you smell exhaust gas inside your vehicle, keep all windows fully open and contact an Authorized Mazda Dealer immediately.

Do not run the engine when inside an enclosed area:

Running the engine inside an enclosed area, such as a garage, is dangerous. Exhaust gas, which contains poisonous carbon monoxide, could easily enter the cabin. Loss of consciousness or even death could occur.

Open the windows or adjust the heating or cooling system to draw fresh air when idling the engine:

Exhaust gas is dangerous. When your vehicle is stopped with the windows closed and the engine running for a long time even in an open area, exhaust gas, which contains poisonous carbon monoxide, could enter the cabin. Loss of consciousness or even death could occur.

Clear snow from underneath and around your vehicle, particularly the tail pipe, before starting the engine:

Running the engine when a vehicle is stopped in deep snow is dangerous. The exhaust pipe could be blocked by the snow, allowing exhaust gas to enter the cabin. Because exhaust gas contains poisonous carbon monoxide, it could cause loss of consciousness or even death to occupants in the cabin.

Before Getting In

- Be sure the windows, outside mirrors, and outside lights are clean.
- Inspect inflation pressures and condition of tires.
- Look under the vehicle for any sign of fluid leaks.
- If you plan to back up, make sure nothing is in your way.

NOTE
Engine oil, engine coolant, brake/clutch fluid, washer fluid, and other fluid levels should be inspected. See Maintenance, Section 8.

After Getting In

- Are all doors closed and locked?
- Is the seat adjusted properly?
- Are the inside and outside mirrors adjusted?
- Is the steering wheel adjusted properly?
- Is everyone's seat belt fastened?
- Check all gauges.
- Check all warning lights when the ignition is switched ON.
- Release the parking brake and make sure the brake warning light goes off.

Always be thoroughly familiar with your Mazda.

Break-In Period

No special break-in is necessary, but a few precautions in the first 1,000 km (600 miles) may add to the performance, economy, and life of your Mazda.

- Do not race the engine.
- Do not maintain one constant speed, either slow or fast, for a long period of time.
- Do not drive constantly at full-throttle or high engine rpm for extended periods of time.
- Avoid unnecessary hard stops.
- Avoid full-throttle starts.

Saving Fuel and Protection of the Environment

How you operate your Mazda determines how far it will travel on a tank of fuel. Use these suggestions to help save fuel and reduce CO2.

- Avoid long warm-ups. Once the engine runs smoothly, begin driving.
- Avoid fast starts.
- Drive at lower speeds.
- Anticipate when to apply the brakes (avoid sudden braking).
- Keep the engine tuned. Follow the maintenance schedule (page 8-4) and have an Authorized Mazda Dealer perform inspections and servicing.
- Use the air conditioner only when necessary.
- Slow down on rough roads.
- Keep the tires properly inflated.
- Do not carry unnecessary weight.
- Do not rest your foot on the brake pedal while driving.
- Keep the wheels in correct alignment.
- Keep windows closed at high speeds.
- Slow down when driving in crosswinds and headwinds.

⚠ WARNING

Never stop the engine when going down a hill:

Stopping the engine when going down a hill is dangerous. This causes the loss of power steering and power brake control, and may cause damage to the drivetrain. Any loss of steering or braking control could cause an accident.

Hazardous Driving

WARNING

Be extremely careful if it is necessary to downshift on slippery surfaces:

Downshifting into lower gear while driving on slippery surfaces is dangerous. The sudden change in tire speed could cause the tires to skid. This could lead to loss of vehicle control and an accident.

Do not rely on ABS as a substitute for safe driving:

The ABS cannot compensate for unsafe and reckless driving, excessive speed, tailgating (following another vehicle too closely), driving on ice and snow, and hydroplaning (reduced tire friction and road contact because of water on the road surface). You can still have an accident.

When driving on ice or in water, snow, mud, sand, or similar hazards:

- Be cautious and allow extra distance for braking.
- Avoid sudden braking and sudden maneuvering.
- Do not pump the brakes. Continue to press down on the brake pedal. Refer to Anti-Lock Brake System (ABS) on page 5-8.
- If you get stuck, select a lower gear and accelerate slowly. Do not spin the front wheels.
- For more traction in starting on slippery surfaces such as ice or packed snow, use sand, rock salt, chains, carpeting, or other nonslip material under the front wheels.

NOTE

Use snow chains only on the front wheels.

Floor Mat

WARNING

Make sure the floor mats are hooked on the retention pins to prevent them from bunching up under the foot pedals:

Using a floor mat that is not secured is dangerous as it will interfere with the accelerator and brake pedal operation, which could result in an accident.

Do not install two floor mats, one on top of the other, on the driver's side:

Installing two floor mats, one on top of the other, on the driver's side is dangerous as the retention pins can only keep one floor mat from sliding forward.
In using a heavy duty floor mat for winter use always remove the original floor mat.
Loose floor mat(s) will interfere with the foot pedal and could result in an accident.

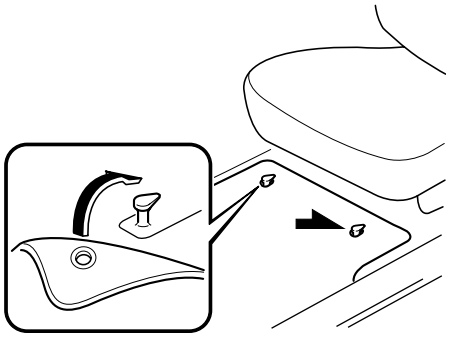

When setting a floor mat, position the floor mat so that its eyelets are inserted over the pointed end of the retention posts.

Rocking the Vehicle

WARNING

Do not spin the wheels at more than 56 km/h (35 mph), and do not allow anyone to stand behind a wheel when pushing the vehicle:

When the vehicle is stuck, spinning the wheels at high speed is dangerous. The spinning tire could overheat and explode. This could cause serious injuries.

CAUTION

Too much rocking may cause engine overheating, transaxle failure, and tire damage.

If you must rock the vehicle to free it from snow, sand or mud, depress the accelerator slightly and slowly move the shift lever from 1 (D) to R.

Winter Driving

- Carry emergency gear, including tire chains, window scraper, flares, a small shovel, jumper cables, and a small bag of sand or salt.

Ask an Authorized Mazda Dealer to perform the following precautions:

- Have the proper ratio of antifreeze in the radiator.
  Refer to Engine Coolant on page 8-22.
- Inspect the battery and its cables. Cold reduces battery capacity.
- Inspect the ignition system for damage and loose connections.
- Use washer fluid made with antifreeze—but do not use engine coolant antifreeze for washer fluid (page 8-26).
- Do not use the parking brake in freezing weather as it may freeze. Instead, shift to P with an automatic transaxle and to 1 or R with a manual transaxle. Block the rear wheels.
- Snow left on the windshield is dangerous as it could obstruct vision. Remove snow before driving.
- Do not apply excessive force to a window scraper when removing ice or frozen snow on the mirror glass and windshield.
- Never use warm or hot water for removing snow or ice from windows and mirrors as it could result in the glass cracking.
- Braking performance can be adversely affected if snow or ice adheres to the brake equipment. If this situation occurs, drive the vehicle slowly, releasing the accelerator pedal and lightly applying the brakes several times until the brake performance returns to normal.

▼Snow Tires

Use snow tires on all four wheels

Do not go faster than 120 km/h (75 mph) while driving with snow tires. Inflate snow tires 30 kPa (0.3 kgf/cm^2, 4.3 psi) more than recommended on the tire pressure label (driver's door frame), but never more than the maximum cold-tire pressure shown on the tires.
Your vehicle is originally equipped with all season radials designed to be used all year around. In some extreme climates you may find it necessary to replace them with snow tires during the winter months to further improve traction on snow and ice covered roads.

⚠ WARNING

Use only the same size and type tires (snow, radial, or non-radial) on all four wheels:

Using tires different in size or type is dangerous. Your vehicle's handling could be greatly affected and result in an accident.

⚠ CAUTION

Check local regulations before using studded tires.

NOTE

If your vehicle is equipped with the tire pressure monitoring system, the system may not function correctly when using tires with steel wire reinforcement in the sidewalls (page 5-32).

▼Tire Chains

Check local regulations before using tire chains.

⚠ CAUTION

- *Chains may affect handling.*
- *Do not go faster than 50 km/h (30 mph) or the chain manufacturer's recommended limit, whichever is lower.*
- *Drive carefully and avoid bumps, holes, and sharp turns.*
- *Avoid locked-wheel braking.*
- *Do not use chains on a temporary spare tire; it may result in damage to the vehicle and to the tire.*
- *Do not use chains on roads that are free of snow or ice. The tires and chains could be damaged.*
- *Chains may scratch or chip aluminum wheels.*

NOTE

If your vehicle is equipped with the tire pressure monitoring system, the system may not function correctly when using tire chains.

Install the chains on the front tires only. Do not use chains on the rear tires. Please consult an Authorized Mazda Dealer.

Installing the chains

1. Remove the wheel covers, or the chain bands will scratch them.
2. Secure the chains on the front tires as tightly as possible. Always follow the chain manufacturer's instructions.
3. Retighten the chains after driving 1/2—1 km (1/4—1/2 mile).

Driving In Flooded Area

WARNING

Dry wet brakes by driving very slowly and applying the brakes lightly until brake performance returns to normal:

Driving with wet brakes is dangerous. Increased stopping distance or the vehicle pulling to one side when braking could result in a serious accident. Light braking will indicate whether the brakes have been affected.

CAUTION

Do not drive the vehicle on flooded roads as it could cause short circuiting of electrical/electronic parts, or engine damage or stalling from water absorption. If the vehicle has been immersed in water, consult an Authorized Mazda Dealer.

Overloading

WARNING

Be careful not to overload your vehicle:

The gross axle weight rating (GAWR) and the gross vehicle weight rating (GVWR) of your vehicle are on the Motor Vehicle Safety Standard Label on the driver's door frame. Exceeding these ratings can cause an accident or vehicle damage. You can estimate the weight of your load by weighing the items (or people) before putting them in the vehicle.

Driving on Uneven Road

Your vehicle's suspension and underbody can be damaged if driven on rough/uneven roads or over speed bumps at excessive speeds. Use care and reduce speed when traveling on rough/uneven roads or over speed bumps.

Use care not to damage the vehicle's underbody, bumpers or muffler(s) when driving under the following conditions:
- Ascending or descending a slope with a sharp transition angle
- Ascending or descending a driveway or trailer ramp with a sharp transition angle

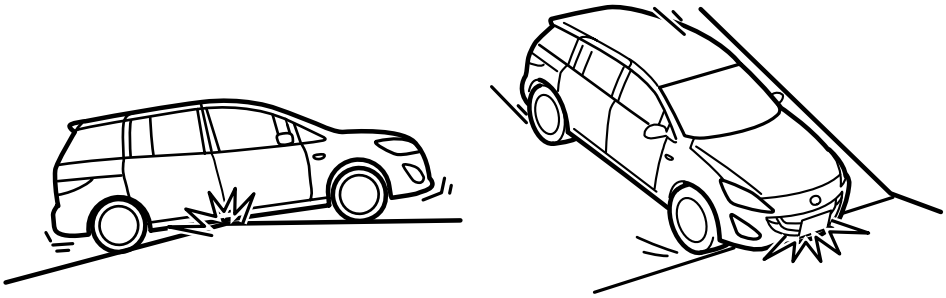

Your vehicle is equipped with low profile tires allowing class-leading performance and handling. As a result, the sidewall of the tires are very thin and the tires and wheels can be damaged if driven through potholes or on rough/uneven roads at excessive speeds. Use care and reduce speed when traveling on rough/uneven roads or through potholes.

Trailer Towing

Your Mazda is not designed for towing.
Never tow a trailer with your Mazda.

5 Driving Your Mazda

Explanation of instruments and controls.

Starting and Driving 5-2
Ignition Switch 5-2
Starting the Engine 5-3
Turning the Engine Off 5-4
Brake System 5-5
Manual Transaxle Operation 5-10
Automatic Transaxle Controls 5-12
Power Steering 5-20
Cruise Control* 5-21
Traction Control System (TCS) 5-24
Dynamic Stability Control (DSC) 5-25
Tire Pressure Monitoring System* 5-28
Parking Sensor System* 5-34

Instrument Cluster and Indicators 5-40
Meters and Gauges 5-40

Warning/Indicator Lights and Beep Sounds 5-44
Warning/Indicator Lights 5-44
Beep Sounds 5-57

Switches and Controls 5-59
Lighting Control 5-59
Turn and Lane-Change Signals 5-63
Fog Lights* 5-64
Windshield Wipers and Washer 5-64
Rear Window Wiper and Washer 5-68
Rear Window Defogger 5-69
Horn 5-70
Hazard Warning Flasher 5-70

*Some models.

Form No.8DW4-EC-14H

Ignition Switch

▼Ignition Switch Positions

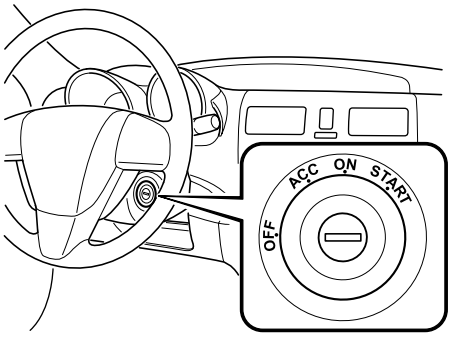

OFF

The power supply to electrical devices is turned off. Only in this position can the key be removed.

⚠ WARNING

Do not stop the engine while the vehicle is moving:

Stopping the engine while the vehicle is moving for any reason other than in an emergency is dangerous. Stopping the engine while the vehicle is moving will result in reduced braking ability due to the loss of power braking, which could cause an accident and serious injury.

Before leaving the driver's seat, always switch the ignition to OFF, set the parking brake and make sure the shift lever is in P (automatic transaxle) or in 1st gear or R (manual transaxle):

It is important to switch the ignition to OFF even if you are not removing the key from the ignition or leaving the vehicle. Leaving the key in other positions will disable some of the vehicle security systems and run the battery down.
Leaving the driver's seat without switching the ignition to OFF, setting the parking brake and shifting the shift lever to P (automatic transaxle) or to 1st gear or R (manual transaxle) is dangerous. Unexpected vehicle movement could occur. This could cause an accident.

ACC (Accessory)

In this position, some electrical accessories will operate.

ON

This is the normal running position after the engine is started. Some indicator lights/warning lights should be inspected before the engine is started (page 5-44).

NOTE
When the ignition is switched ON, the sound of the fuel pump motor operating near the fuel tank can be heard. This does not indicate an abnormality.

START

The engine is started in this position. It will crank until you release the key. It then returns to the ON position.

▼Ignition Key Reminder

If the ignition is switched off or the ignition is switched to ACC with the key inserted, a continuous beep sound will be heard when the driver's door is opened.

NOTE
A personalized function is available to change the sound volume for the ignition key reminder. Refer to Personalization Features on page 10-8.

Starting the Engine

NOTE
Engine-starting is controlled by the spark ignition system.
This system meets all Canadian Interference-Causing Equipment Standard requirements regulating the impulse electrical field strength of radio noise.

1. Occupants should fasten their seat belts.
2. Make sure the parking brake is on.
3. Depress the brake pedal.
4. **(Manual transaxle)**
   Depress the clutch pedal all the way and shift into neutral.
   Keep the clutch pedal depressed while cranking the engine.
   (Automatic transaxle)
   Put the vehicle in park (P). If you must restart the engine while the vehicle is moving, shift into neutral (N).

NOTE
(Manual transaxle)
The starter will not operate unless the clutch is depressed sufficiently.
(Automatic transaxle)
The starter will not operate if the shift lever is ***not*** *in P or N.*

5. Switch the ignition to START and hold (up to 10 seconds at a time) until the engine starts.

⚠ CAUTION

Do not try the starter for more than 10 seconds at a time. If the engine stalls or fails to start, wait 10 seconds before trying again. Otherwise, you may damage the starter and drain the battery.

6. After starting the engine, let it idle for about 10 seconds.

NOTE

- *In extremely cold weather or after the vehicle has not been driven in several days, let the engine warm up without operating the accelerator.*
- *Whether the engine is cold or warm, it should be started without use of the accelerator.*
- *If the engine does not start the first time, refer to Starting a Flooded Engine under Emergency Starting. If the engine still does not start, have your vehicle inspected by an Authorized Mazda Dealer (page 7-16).*

Turning the Engine Off

⚠ WARNING

Do not stop the engine while the vehicle is moving:

Stopping the engine while the vehicle is moving for any reason other than in an emergency is dangerous. Stopping the engine while the vehicle is moving will result in reduced braking ability due to the loss of power braking, which could cause an accident and serious injury.

1. Stop the vehicle completely.
2. **(Manual transaxle)**
   Shift into neutral.
   (Automatic transaxle)
   Shift the shift lever to the P position.
3. Switch the ignition from ON to OFF.

⚠ CAUTION

When leaving the vehicle, make sure the ignition is switched off.

NOTE

The cooling fan in the engine compartment could turn on for a few minutes after the ignition is switched from ON to OFF, whether or not the A/C is on or off, to cool the engine compartment quickly.

Brake System

▼Foot Brake

Your Mazda has power-assisted brakes that adjust automatically through normal use.

Should power-assist fail, you can stop by applying greater force than normal to the brake pedal. But the distance required to stop will be greater than usual.

⚠ WARNING

Do not coast with the engine stalled or turned off, find a safe place to stop:

Coasting with the engine stalled or turned off is dangerous. Braking will require more effort, and the brake's power-assist could be depleted if you pump the brake. This will cause longer stopping distances or even an accident.

Shift to a lower gear when going down steep hills:

Driving with your foot continuously on the brake pedal or steadily applying the brakes for long distances is dangerous. This causes overheated brakes, resulting in longer stopping distances or even total brake failure. This could cause loss of vehicle control and a serious accident. Avoid continuous application of the brakes.

Dry off brakes that have become wet by driving slowly, releasing the accelerator pedal and lightly applying the brakes several times until the brake performance returns to normal:

Driving with wet brakes is dangerous. Increased stopping distance or the vehicle pulling to one side when braking could result in a serious accident. Light braking will indicate whether the brakes have been affected.

CAUTION

- *Do not drive with your foot held on the clutch pedal or brake pedal, or hold the clutch pedal depressed halfway unnecessarily. Doing so could result in the following:*
  - *The clutch and brake parts will wear out more quickly.*
  - *The brakes can overheat and adversely affect brake performance.*
- *Always depress the brake pedal with the right foot. Applying the brakes with the unaccustomed left foot could slow your reaction time to an emergency situation resulting in insufficient braking operation.*

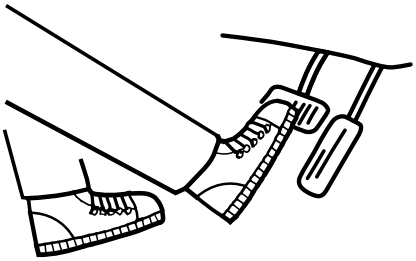

- *Wear shoes appropriate for driving in order to avoid your shoe contacting the brake pedal when depressing the accelerator pedal.*

▼Parking Brake

WARNING

Before leaving the driver's seat, always switch the ignition to OFF, set the parking brake and make sure the shift lever is in P (automatic transaxle) or in 1st gear or R (manual transaxle):

It is important to switch the ignition to OFF even if you are not removing the key from the ignition or leaving the vehicle. Leaving the key in other positions will disable some of the vehicle security systems and run the battery down.

Leaving the driver's seat without switching the ignition to OFF, setting the parking brake and shifting the shift lever to P (automatic transaxle) or to 1st gear or R (manual transaxle) is dangerous. Unexpected vehicle movement could occur. This could cause an accident.

CAUTION

Driving with the parking brake on will cause excessive wear of the brake parts.

NOTE

For parking in snow, refer to Winter Driving (page 4-8) regarding parking brake use.

Setting the parking brake

Depress the brake pedal and then firmly pull the parking brake lever fully upwards with sufficient force to hold the vehicle in a stationary position.

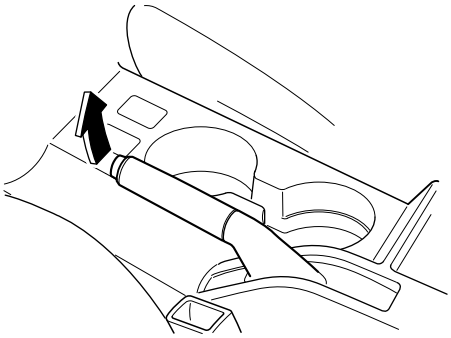

Releasing the parking brake

Depress the brake pedal and pull the parking brake lever upwards, then press the release button. While holding the button, lower the parking brake lever all the way down to the released position.

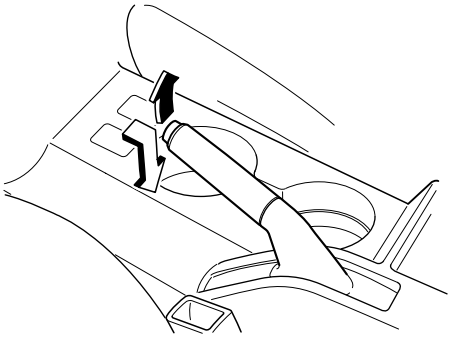

▼Brake System Warning Light

This warning has the following functions:

Parking brake warning/Warning light inspection

The light illuminates when the parking brake is applied with the ignition switched to START or ON. It turns off when the parking brake is fully released.

Low brake fluid level warning

If the brake warning light remains illuminated even though the parking brake is released, the brake fluid may be low or there could be a problem with the brake system. Park the vehicle in a safe place immediately and contact an Authorized Mazda Dealer.

⚠ WARNING

Do not drive with the brake system warning light illuminated. Contact an Authorized Mazda Dealer to have the brakes inspected as soon as possible:

Driving with the brake system warning light illuminated is dangerous. It indicates that your brakes may not work at all or that they could completely fail at any time. If this light remains illuminated, after checking that the parking brake is fully released, have the brakes inspected immediately.

CAUTION

In addition, the effectiveness of the braking may diminish so you may need to depress the brake pedal more strongly than normal to stop the vehicle.

▼Anti-Lock Brake System (ABS)

The ABS control unit continuously monitors the speed of each wheel. If one wheel is about to lock up, the ABS responds by automatically releasing and reapplying that wheel's brake.

The driver will feel a slight vibration in the brake pedal and may hear a chattering noise from the brake system. This is normal ABS system operation. Continue to depress the brake pedal without pumping the brakes.

WARNING

Do not rely on ABS as a substitute for safe driving:

The ABS cannot compensate for unsafe and reckless driving, excessive speed, tailgating (following another vehicle too closely), driving on ice and snow, and hydroplaning (reduced tire friction and road contact because of water on the road surface). You can still have an accident.

NOTE

- *Braking distances may be longer on loose surfaces (snow or gravel, for example) which usually have a hard foundation. A vehicle with a normal braking system may require less distance to stop under these conditions because the tires will build up a wedge of surface layer when the wheels skid.*
- *The sound of the ABS operating may be heard when starting the engine or immediately after starting the vehicle, however, it does not indicate a malfunction.*

▼ABS Warning Light

The warning light stays on for a few seconds when the ignition is switched ON.

If the ABS warning light stays on while you're driving, the ABS control unit has detected a system malfunction. If this occurs, your brakes will function normally as if the vehicle had no ABS.
Should this happen, consult an Authorized Mazda Dealer as soon as possible.

NOTE

- *When the engine is jump-started to charge the battery, uneven rpm occurs and the ABS warning light may illuminate. If this occurs, it is the result of the weak battery and does not indicate an ABS malfunction.*
  Recharge the battery.
- *The brake assist system does not operate while the ABS warning light is illuminated.*

▼Electronic Brake Force Distribution System Warning

If the electronic brake force distribution control unit determines that some components are operating incorrectly, the control unit may illuminate the brake system warning light and the ABS warning light on simultaneously. The problem is likely to be the electronic brake force distribution system.

⚠ WARNING

Do not drive with both the ABS warning light and brake warning light illuminated. Have the vehicle towed to an Authorized Mazda Dealer to have the brakes inspected as soon as possible:

Driving when the brake system warning light and ABS warning light are illuminated simultaneously is dangerous.
When both lights are illuminated, the rear wheels could lock more quickly in an emergency stop than under normal circumstances.

▼Brake Assist

During emergency braking situations when it is necessary to depress the brake pedal with greater force, the brake assist system provides braking assistance, thus enhancing braking performance.

When the brake pedal is depressed hard or depressed more quickly, the brakes apply more firmly.

NOTE

- *When the brake pedal is depressed hard or depressed more quickly, the pedal will feel softer but the brakes will apply more firmly. This is a normal effect of the brake assist operation and does not indicate a malfunction.*
- *When the brake pedal is depressed hard or depressed more quickly, a motor/pump operation noise may be heard. This is a normal effect of the brake assist and does not indicate a malfunction.*
- *The brake assist equipment does not supersede the functionality of the vehicle's main braking system.*

Manual Transaxle Operation

▼Manual Transaxle Shift Pattern

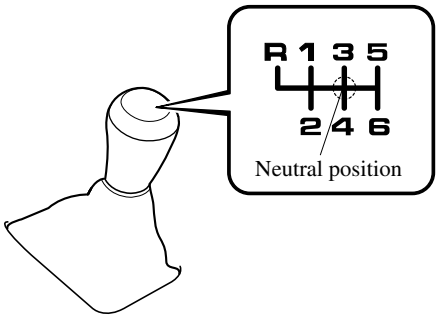

The shift pattern of the transaxle is conventional, as shown.

Depress the clutch pedal all the way down while shifting; then release it slowly.

Your vehicle is equipped with a device to prevent shifting to R (reverse) by mistake. Push the shift lever downward and shift to R.

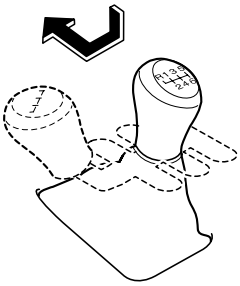

⚠ WARNING

Do not use sudden engine braking on slippery road surfaces or at high speeds:

Shifting down while driving on wet, snowy, or frozen roads, or while driving at high speeds causes sudden engine braking, which is dangerous. The sudden change in tire speed could cause the tires to skid. This could lead to loss of vehicle control and an accident.

Be sure to leave the shift lever in 1 or R position and set the parking brake when leaving the vehicle unattended:

Otherwise the vehicle could move and cause an accident.

⚠ CAUTION

- *Keep your foot off the clutch pedal except when shifting gears. Also, do not use the clutch to hold the vehicle on an upgrade. Riding the clutch will cause needless clutch wear and damage.*
- *Do not apply any excessive lateral force to the gear lever when changing from 5th to 4th gear. This could lead to the accidental selection of 2nd gear, which can result in damage to the transaxle.*
- *Make sure the vehicle comes to a complete stop before shifting to R. Shifting to R while the vehicle is still moving may damage the transaxle.*

NOTE

If shifting to R is difficult, shift back into neutral, release the clutch pedal, and try again.

▼Recommendations for Shifting

Upshifting

For normal acceleration, we recommend these shift points.

Gear	Vehicle speed
1 to 2	25 km/h (15 mph)
2 to 3	42 km/h (26 mph)
3 to 4	60 km/h (37 mph)
4 to 5	75 km/h (46 mph)
5 to 6	79 km/h (49 mph)

For cruising

Gear	Vehicle speed
1 to 2	13 km/h (8 mph)
2 to 3	29 km/h (18 mph)
3 to 4	49 km/h (30 mph)
4 to 5	63 km/h (39 mph)
5 to 6	70 km/h (43 mph)

Downshifting

When you must slow down in heavy traffic or on a steep **upgrade**, downshift before the engine starts to overwork. This reduces the chance of stalling and gives better acceleration when you need more speed.
On a steep **downgrade**, downshifting helps maintain safe speed and prolongs brake life.

Automatic Transaxle Controls

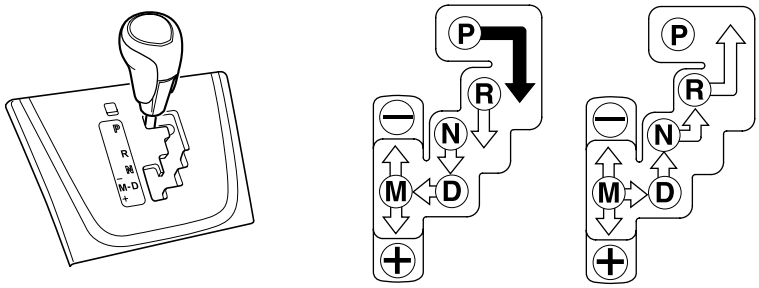

Various Lockouts:

➡ Indicates that you must depress the brake pedal to shift (The ignition must be switched to ACC or ON).

⇨ Indicates the shift lever can be shifted freely into any position.

NOTE

The Sport AT has an option that is not included in the traditional automatic transaxle giving the driver the option of selecting each gear instead of leaving it to the transaxle to shift gears. Even if you intend to use the automatic transaxle functions as a traditional automatic, you should also be aware that you can inadvertently shift into manual shift mode and an inappropriate gear may be retained as the vehicle speed increases. If you notice the engine speed going higher or hear the engine racing, confirm you have not accidentally slipped into manual shift mode (page 5-15).

▼Transaxle Ranges

The shift lever must be in P or N to operate the starter.

P (Park)

P locks the transaxle and prevents the front wheels from rotating.

⚠ WARNING

Always set the shift lever to P and set the parking brake:

Only setting the shift lever to the P position without using the parking brake to hold the vehicle is dangerous. If P fails to hold, the vehicle could move and cause an accident.

⚠ CAUTION

- *Shifting into P, N or R while the vehicle is moving can damage your transaxle.*
- *Shifting into a driving gear or reverse when the engine is running faster than idle can damage the transaxle.*

R (Reverse)

In position R, the vehicle moves only backward. You must be at a complete stop before shifting to or from R, except under rare circumstances as explained in Rocking the Vehicle (page 4-8).

N (Neutral)

In N, the wheels and transaxle are not locked. The vehicle will roll freely even on the slightest incline unless the parking brake or brakes are on.

⚠ WARNING

If the engine is running faster than idle, do not shift from N or P into a driving gear:

It's dangerous to shift from N or P into a driving gear when the engine is running faster than idle. If this is done, the vehicle could move suddenly, causing an accident or serious injury.

Do not shift into N when driving the vehicle:

Shifting into N while driving is dangerous. Engine braking cannot be applied when decelerating which could lead to an accident or serious injury.

⚠ CAUTION

Do not shift into N when driving the vehicle. Doing so can cause transaxle damage.

NOTE

Apply the parking brake or depress the brake pedal before moving the shift lever from N to prevent the vehicle from moving unexpectedly.

D (Drive)

D is the normal driving position. From a stop, the transaxle will automatically shift through a 5-gear sequence.

M (Manual)

M is the manual shift mode position. Gears can be shifted up or down by operating the shift lever.
Refer to Manual Shift Mode (page 5-15).

▼Active Adaptive Shift (AAS)

Active Adaptive Shift (AAS) automatically controls the transaxle shift points to best suit the road conditions and driver input. This improves driving feel. If the driver accelerates rapidly, or accelerates and decelerates rapidly by operating the accelerator and brake pedal for a certain period of time while the shift lever is in the D position, AAS mode could activate.
When cornering the vehicle, AAS mode will hold the transaxle in the gear the vehicle was in before entering the curve, allowing the vehicle to be accelerated from the same gear after exiting the curve. AAS mode will maintain the transaxle in the optimum gear and the driver may sense that the transaxle is not shifting, however this does not indicate an abnormality.

▼Shift-Lock System

The shift-lock system prevents shifting out of P unless the brake pedal is depressed.

To shift from P:

1. Depress and hold the brake pedal.
2. Start the engine.
3. Move the shift lever.

NOTE

- *When the ignition is switched off, the shift lever cannot be shifted from P.*
- *To be sure the vehicle is in park,* ***the ignition key cannot be removed unless the shift lever is in P.***

▼Shift-Lock Override

If the shift lever will not move from P using the proper shift procedure, continue to hold down the pedal.

1. Remove the shift-lock override cover using a cloth-wrapped flat head screwdriver.
2. Insert a screwdriver and push it down.

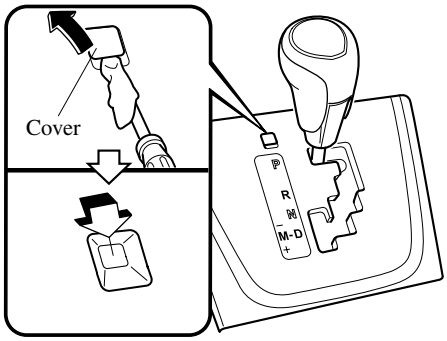

3. Move the shift lever.
4. Take the vehicle to an Authorized Mazda Dealer to have the system checked.

▼Manual Shift Mode

This mode gives you the feel of driving a manual transaxle vehicle by operating the shift lever and allows you to control engine rpm and torque to the front wheels much like a manual transaxle when more control is desired.

To change to manual shift mode, shift the lever from D to M.

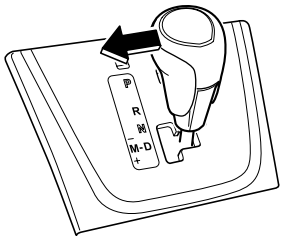

NOTE
Changing to manual shift mode while driving will not damage the transaxle.

To return to automatic shift mode, shift the lever from M to D.

NOTE
- *If you change to manual shift mode when the vehicle is stopped, the gear will shift to M1.*
- *If you change to manual shift mode without depressing the accelerator pedal when driving in D range, 5th gear, the gear will shift to M4.*

Indicators

Manual shift mode indicator

In manual shift mode, the “M” of the shift position indicator in the instrument panel illuminates.

Gear position indicator

The numeral for the selected gear illuminates.

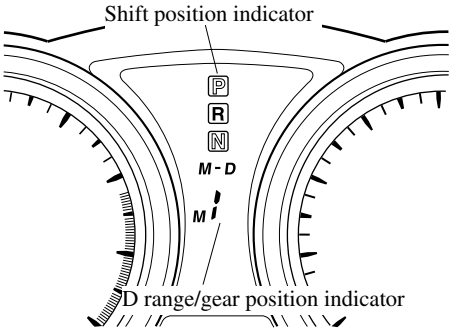

NOTE
- *If the gears cannot be shifted down when driving at higher speeds, the gear position indicator will flash twice to signal that the gears cannot be shifted down (to protect the transaxle).*
- *If the automatic transaxle fluid (ATF) temperature becomes too high, there is the possibility that the transaxle will switch to automatic shift mode, canceling manual shift mode and turning off the gear position indicator illumination. This is a normal function to protect the AT. After the ATF temperature has decreased, the gear position indicator illumination turns back on and driving in manual shift mode is restored.*

Shifting

Manually Shifting up

(M1 → M2 → M3 → M4 → M5)
To shift up to a higher gear, move the shift lever back (+) once.

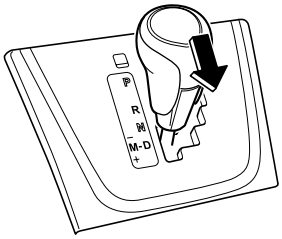

NOTE

- *When driving slowly, the gears may not shift up.*
- *In manual shift mode, gears do not shift up automatically. Do not run the engine with the tachometer needle in the RED ZONE. If the tachometer needle enters the RED ZONE, you may feel engine-braking because the fuel delivery will be stopped to protect the engine. However, this does not indicate an abnormality.*
- *When depressing the accelerator fully, the transaxle will shift to a lower gear, depending on vehicle speed.*

Manually Shifting down

(M5 → M4 → M3 → M2 → M1)
To shift down to a lower gear, move the shift lever forward (−) once.

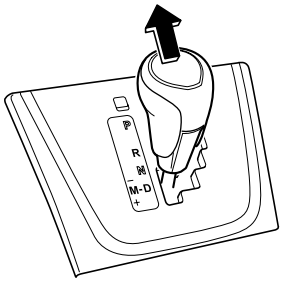

⚠ WARNING

Do not use engine braking on slippery road surfaces or at high speeds:
Shifting down while driving on wet, snowy, or frozen roads, or while driving at high speeds causes sudden engine braking, which is dangerous. The sudden change in tire speed could cause the tires to skid. This could lead to loss of vehicle control and an accident.

NOTE

- *When driving at high speeds, the gear may not shift down.*
- *During deceleration, the gear may automatically shift down depending on vehicle speed.*
- *When depressing the accelerator fully, the transaxle will shift to a lower gear, depending on vehicle speed.*

Second gear fixed mode

When the selector lever is moved back (+) while the vehicle speed is about 10 km/h (6 mph) or less, the transaxle is set in the second gear fixed mode. The gear is fixed in second while in this mode for easier acceleration from a stop and driving on slippery roads such as snow-covered roads.
If the selector lever is moved back (+) or forward (−) while in the second gear fixed mode, the mode will be canceled.

Shift gear (shifting) speed limit

For each gear position while in the manual mode, the speed limit is set as follows: When the selector lever is operated within the range of the speed limit, the gear is shifted.

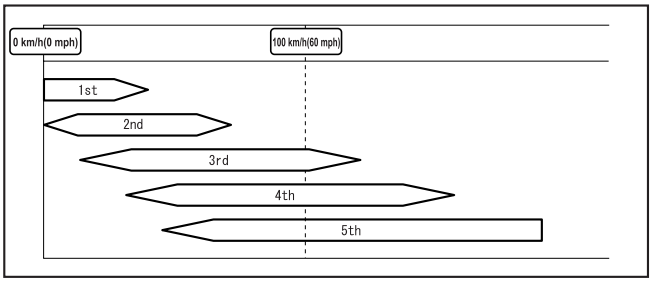

Shift up

The gear does not shift up while the vehicle speed is lower than the speed limit.

Shift down

The gear does not shift down while the vehicle speed exceeds the speed limit.
If the vehicle speed exceeds the speed limit and the gear does not shift down, the gear position indication flashes 2 times to notify the driver that the gear cannot be shifted.

Kickdown

When the accelerator pedal is depressed fully while driving, the gear shifts down.

Auto-shift down

The gear shifts down automatically depending on the vehicle speed during deceleration.

NOTE
If the vehicle comes to a stop while in the second gear fixed mode, the gear remains in second.

Recommendations for shifting

Upshifting

For normal acceleration and cruising, we recommend these shift points.

Gear	Vehicle speed
M1 to M2	25 km/h (15 mph)
M2 to M3	41 km/h (25 mph)
M3 to M4	65 km/h (40 mph)
M4 to M5	73 km/h (45 mph)

Downshifting

When you must slow down in heavy traffic or on a steep **upgrade**, downshift before the engine starts to overwork. This gives better acceleration when you need more speed.

On a steep **downgrade**, downshifting helps maintain safe speed and prolongs brake life.

▼Driving Tips

WARNING

Do not allow the vehicle to move in reverse on an up-slope while the selector lever is in a forward gear position, or move forward on a down-slope while the selector lever is in the reverse position.

Otherwise, the engine will stop, causing the loss of the power brake and power steering functions, and make it difficult to control the vehicle which could result in an accident.

Passing

For extra power when passing another vehicle or climbing steep grades, depress the accelerator fully. The transaxle will shift to a lower gear, depending on vehicle speed.

Climbing steep grades from a stop

To climb a steep grade from a stopped position:

1. Depress the brake pedal.
2. Shift to D or M1, depending on the load weight and grade steepness.
3. Release the brake pedal while gradually accelerating.

Descending steep grades

When descending a steep grade, shift to lower gears, depending on load weight and grade steepness. Descend slowly, using the brakes only occasionally to prevent them from overheating.

Power Steering

Power steering is only operable when the engine is running. If the engine is off or if the power steering system is inoperable, you can still steer, but it requires more physical effort.

If the steering feels stiffer than usual during normal driving, consult an Authorized Mazda Dealer.

CAUTION

Never hold the steering wheel to the extreme left or right for more than 5 seconds with the engine running. This could damage the power steering system.

▼Power Steering Malfunction Indicator Light

This indicator light illuminates when the ignition is switched ON, and turns off when the engine is started.

If the light remains illuminated after the engine is started, or illuminates while driving, turn off the engine after parking in a safe place, and then start the engine again.
If the light does not illuminate after restarting the engine, this indicates that the power steering is restored and normal steering is possible.
If the light remains illuminated, the power steering is still inoperable. Consult an Authorized Mazda Dealer.

NOTE

- *The power steering system is inoperable when the power steering malfunction indicator light illuminates. Steering is possible, but requires more physical effort.*
- *Repeatedly jerking the steering wheel left and right while the vehicle is stopped or moving at slow speeds will cause the power steering system to go into protective mode which will make the steering feel heavy, but this does not indicate a malfunction. If this occurs, park the vehicle safely and wait a few minutes for the system to return to normal.*

Cruise Control*

With cruise control, you can set and automatically maintain any speed of more than about 30 km/h (19 mph).

WARNING

Do not use the cruise control under the following conditions:

Using the cruise control under the following conditions is dangerous and could result in loss of vehicle control.

- *Hilly terrain*
- *Steep inclines*
- *Heavy or unsteady traffic*
- *Slippery or winding roads*
- *Similar restrictions that require inconsistent speed*

▼Cruise Main Indicator Light (Amber)/Cruise Set Indicator Light (Green)

CRUISE

The indicator light has two colors.

Cruise Main Indicator Light (Amber)

The indicator light illuminates amber when the ON switch is pressed and the cruise control system is activated.

Cruise Set Indicator Light (Green)

The indicator light illuminates green when a cruising speed has been set.

▼Activation/Deactivation

To activate the system, press the ON switch.
The cruise main indicator light illuminates.

To deactivate the system, press the OFF switch.
The cruise main indicator light turns off.

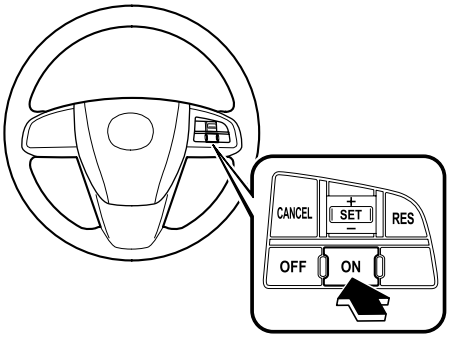

WARNING

Always turn off the cruise control system when it is not in use:

Leaving the cruise control system in an activation-ready state while the cruise control is not in use is dangerous as the cruise control could unexpectedly activate if the activation button is accidentally pressed, and result in loss of vehicle control and an accident.

▼To Set Speed

1. Activate the cruise control system by pressing the ON switch.
2. Accelerate to the desired speed, which must be more than 30 km/h (19 mph).

*Some models.

3. Set the cruise control by pressing the cruise control SET + /SET - switch up or down at the desired speed. The cruise control is set at the moment the cruise control SET + /SET - switch is pressed up or down. Release the accelerator pedal simultaneously.

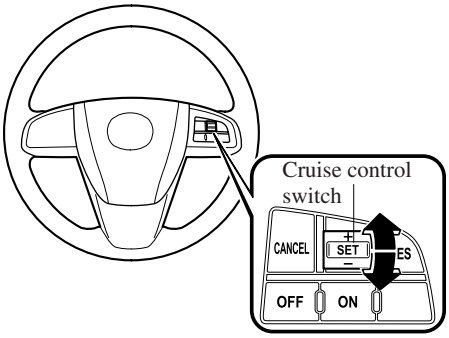

NOTE

- *Release the cruise control switch at the desired speed, otherwise the speed will continue increasing while the switch is pressed up, and continue decreasing while it is pressed down (except when the accelerator pedal is depressed).*
- *On a steep grade, the vehicle may momentarily slow down while ascending, or speed up while descending.*
- *Cruise control will turn off if the vehicle speed decreases below about 23 km/h (14 mph) when cruise is activated, such as when climbing a steep grade.*

▼To Increase Cruising Speed

Follow either of these procedures.

To increase speed using cruise control switch

Press up the cruise control SET + switch and hold it. Your vehicle will accelerate. Release the switch at the speed you want.

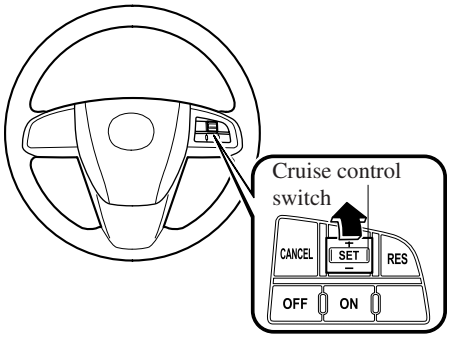

Your vehicle has a tap-up feature that allows you to increase your current speed in increments of 1.6 km/h (1 mph) by a momentary tap of the cruise control SET + switch. Multiple taps will increase your vehicle speed 1.6 km/h (1 mph) for each tap.

To increase speed using accelerator pedal

Depress the accelerator pedal to accelerate to the desired speed.
Press down or press up on the cruise control SET + /SET - switch and release it immediately.

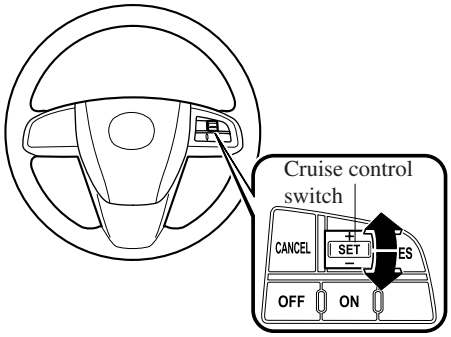

NOTE
Accelerate if you want to speed up temporarily when the cruise control is on. Greater speed will not interfere with or change the set speed. Take your foot off the accelerator to return to the set speed.

▼To Decrease Cruising Speed

Press down the cruise control SET - switch and hold it. The vehicle will gradually slow.
Release the switch at the speed you want.

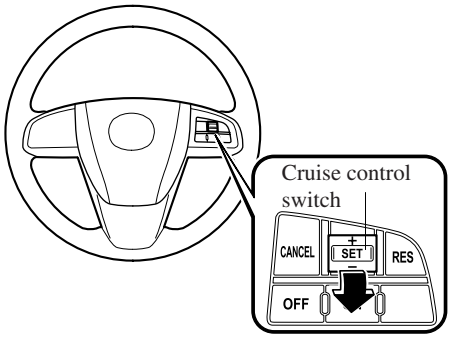

Your vehicle has a tap-down feature that allows you to decrease your current speed in decrements of 1.6 km/h (1 mph) by a momentary tap of the cruise control SET - switch. Multiple taps will decrease your vehicle speed 1.6 km/h (1 mph) for each tap.

▼To Resume Cruising Speed at More Than 30 km/h (19 mph)

If some other method besides the OFF switch was used to cancel cruising speed (such as applying the brake pedal) and the system is still activated, the most recent set speed will automatically resume when the RES switch is pressed.
If vehicle speed is below 30 km/h (19 mph), increase the vehicle speed up to 30 km/h (19 mph) or more and press the RES switch.

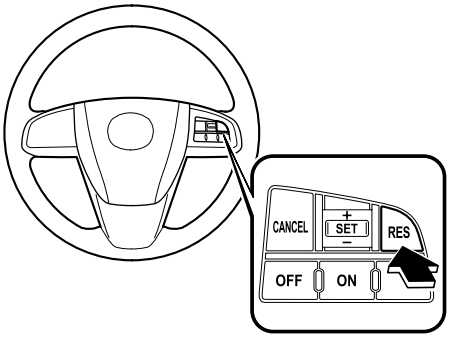

▼To Cancel

To cancel the system, use **one** of these methods:
- Press the OFF switch.
- Slightly depress the brake pedal.
- Depress the clutch pedal (Manual transaxle only).

- Press the CANCEL switch.

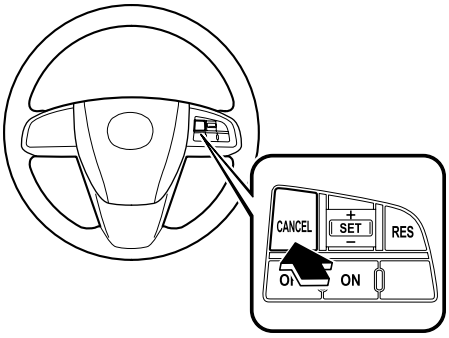

The system turns off when the ignition is switched off.

NOTE
Cruise control will cancel at about 15 km/h (9 mph) below the preset speed (such as may happen when climbing a long, steep grade).

Traction Control System (TCS)

The Traction Control System (TCS) enhances traction and safety by controlling engine torque and braking. When the TCS detects driving wheel slippage, it lowers engine torque and operates the brakes to prevent loss of traction.

This means that on a slick surface, the engine adjusts automatically to provide optimum power to the drive wheels, limiting wheel spin and loss of traction.

WARNING

Do not rely on the traction control system as a substitute for safe driving:
The traction control system (TCS) cannot compensate for unsafe and reckless driving, excessive speed, tailgating (following another vehicle too closely), and hydroplaning (reduced tire friction and road contact because of water on the road surface). You can still have an accident.

Use snow tires or tire chains and drive at reduced speeds when roads are covered with ice and/or snow:
Driving without proper traction devices on snow and/or ice-covered roads is dangerous. The traction control system (TCS) alone cannot provide adequate traction and you could still have an accident.

NOTE
To turn off the TCS, press the DSC OFF switch (page 5-26).

▼TCS/DSC Indicator Light

This indicator light stays on for a few seconds when the ignition is switched ON. If the TCS or DSC is operating, the indicator light flashes.

If the light stays on, the TCS or DSC may have a malfunction and they may not operate correctly. Take your vehicle to an Authorized Mazda Dealer.

NOTE

- *In addition to the indicator light flashing, a slight lugging sound will come from the engine. This indicates that the TCS is operating properly.*
- *On slippery surfaces, such as fresh snow, it will be impossible to achieve high rpm when the TCS is on.*

Dynamic Stability Control (DSC)

The Dynamic Stability Control (DSC) automatically controls braking and engine torque in conjunction with systems such as ABS and TCS to help control side slip when driving on slippery surfaces, or during sudden or evasive maneuvering, enhancing vehicle safety.

Refer to ABS (page 5-8) and TCS (page 5-24).

DSC operation is possible at speeds greater than 20 km/h (12 mph).

⚠ WARNING

Do not rely on the dynamic stability control as a substitute for safe driving:
The dynamic stability control (DSC) cannot compensate for unsafe and reckless driving, excessive speed, tailgating (following another vehicle too closely), and hydroplaning (reduced tire friction and road contact because of water on the road surface). You can still have an accident.

CAUTION

- *The DSC may not operate correctly unless the following are observed:*
  - *Use tires of the correct size specified for your Mazda on all four wheels.*
  - *Use tires of the same manufacturer, brand and tread pattern on all four wheels.*
  - *Do not mix worn tires.*
- *The DSC may not operate correctly when tire chains are used or a temporary spare tire is installed because the tire diameter changes.*

NOTE
After switching the ignition ON, a clicking sound may be heard behind the dashboard. This sound is the result of the DSC system self-check operation and does not indicate an abnormality.

▼TCS/DSC Indicator Light

This indicator light stays on for a few seconds when the ignition is switched ON. If the TCS or DSC is operating, the indicator light flashes.

If the light stays on, the TCS or DSC may have a malfunction and they may not operate correctly. Take your vehicle to an Authorized Mazda Dealer.

▼DSC OFF Indicator Light

This indicator light stays on for a few seconds when the ignition is switched ON.
It also illuminates when the DSC OFF switch is pressed and TCS/DSC is switched off (page 5-26).

If the light stays on when the TCS/DSC is not switched off, take your vehicle to an Authorized Mazda Dealer. The dynamic stability control may have a malfunction.

▼DSC OFF Switch

Press the DSC OFF switch to turn off the TCS/DSC. The DSC OFF indicator light illuminates.

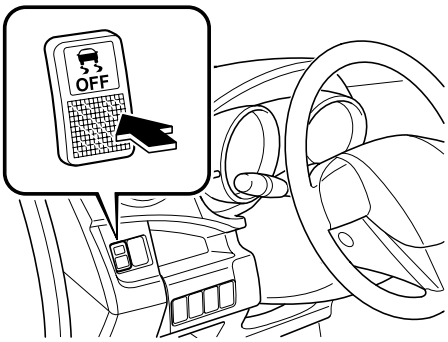

Press the switch again to turn the TCS/DSC back on. The DSC OFF indicator light turns off.

NOTE

- *When DSC is on and you attempt to free the vehicle when it is stuck, or drive it out of freshly fallen snow, the TCS (part of the DSC system) will activate. Depressing the accelerator will not increase engine power and freeing the vehicle may be difficult. When this happens, turn off the TCS/DSC.*
- *If the TCS/DSC is off when the engine is turned off, it automatically activates when the ignition is switched ON.*
- *Leaving the TCS/DSC on will provide the best stability.*

Tire Pressure Monitoring System*

The tire pressure monitoring system (TPMS) monitors the pressure for each tire.
If tire pressure is too low in one or more tires, the system will inform the driver via the warning light in the instrument panel and by the warning beep sound.

The tire pressure sensors installed on each wheel send tire pressure data by radio signal to the receiver unit in the vehicle.

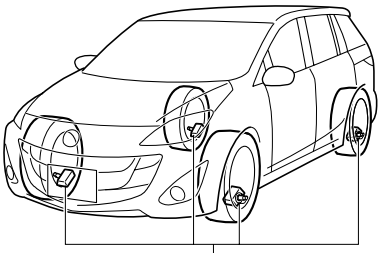

NOTE
When the ambient temperature is low due to seasonal changes, tire temperatures are also lower. When the tire temperature decreases, the air pressure decreases as well. The TPMS warning light may illuminate more frequently. Visually inspect the tires daily before driving, and check tire pressures monthly with a tire pressure gauge. When checking tire pressures, use of a digital tire pressure gauge is recommended.

TPMS does not alleviate your need to check the pressure and condition of all four tires regularly.

 *Some models.

CAUTION

Each tire, including the spare (if provided), should be checked monthly when cold and inflated to the inflation pressure recommended by the vehicle manufacturer on the vehicle placard or tire inflation pressure label. (If your vehicle has tires of a different size than the size indicated on the vehicle placard or tire inflation pressure label, you should determine the proper tire inflation pressure for those tires.)
As an added safety feature, your vehicle has been equipped with a tire pressure monitoring system (TPMS) that illuminates a low tire pressure telltale when one or more of your tires is significantly under-inflated. Accordingly, when the low tire pressure telltale illuminates, you should stop and check your tires as soon as possible, and inflate them to the proper pressure. Driving on a significantly under-inflated tire causes the tire to overheat and can lead to tire failure. Under-inflation also reduces fuel efficiency and tire tread life, and may affect the vehicle's handling and stopping ability.
Please note that the TPMS is not a substitute for proper tire maintenance, and it is the driver's responsibility to maintain correct tire pressure, even if under-inflation has not reached the level to trigger illumination of the TPMS low tire pressure telltale.
Your vehicle has also been equipped with a TPMS malfunction indicator to indicate when the system is not operating properly.
The TPMS malfunction indicator is combined with the low tire pressure telltale. When the system detects a malfunction, the telltale will flash for approximately one minute and then remain continuously illuminated. This sequence will continue upon subsequent vehicle start-ups as long as the malfunction exists. When the malfunction indicator is illuminated, the system may not be able to detect or signal low tire pressure as intended. TPMS malfunctions may occur for a variety of reasons, including the installation of replacement or alternate tires or wheels on the vehicle that prevent the TPMS from functioning properly. Always check the TPMS malfunction telltale after replacing one or more tires or wheels on your vehicle to ensure that the replacement or alternate tires and wheels allow the TPMS to continue to function properly.
To avoid false readings, the system samples for a little while before indicating a problem. As a result it will not instantaneously register a rapid tire deflation or blow out.

NOTE

This device complies with part 15 of the FCC Rules. Operation is subject to the following two conditions: (1) This device may not cause harmful interference, and (2) this device must accept any interference received, including interference that may cause undesired operation.

▼Tire Pressure Monitoring System Warning Light

This warning light illuminates for a few seconds when the ignition is switched ON.

Thereafter, the warning light illuminates and a beep is heard when tire pressure is too low in one or more tires, and flashes when there is a system malfunction.

WARNING

If the tire pressure monitoring system warning light illuminates or flashes, or the tire pressure warning beep sound is heard, decrease vehicle speed immediately and avoid sudden maneuvering and braking:

If the tire pressure monitoring system warning light illuminates or flashes, or the tire pressure warning beep sound is heard, it is dangerous to drive the vehicle at high speeds, or perform sudden maneuvering or braking. Vehicle drivability could worsen and result in an accident.
To determine if you have a slow leak or a flat, pull over to a safe position where you can check the visual condition of the tire and determine if you have enough air to proceed to a place where air may be added and the system monitored again by an Authorized Mazda Dealer or a tire repair station.

Do not ignore the TPMS Warning Light:

Ignoring the TPMS warning light is dangerous, even if you know why it is illuminated. Have the problem taken care of as soon as possible before it develops into a more serious situation that could lead to tire failure and a dangerous accident.

Warning light illuminates/Warning beep sounds

When the warning light illuminates, and the warning beep sound is heard (about 3 seconds), tire pressure is too low in one or more tires.

Adjust the tire pressure to the correct tire pressure. Refer to the specification charts (page 10-6).

CAUTION

When replacing/repairing the tires or wheels or both, have the work done by an Authorized Mazda Dealer, or the tire pressure sensors may be damaged.

NOTE

- *Perform tire pressure adjustment when the tires are cold. Tire pressure will vary according to the tire temperature, therefore let the vehicle stand for 1 hour or only drive it 1.6 km (1 mile) or less before adjusting the tire pressures. When pressure is adjusted on hot tires to the cold inflation pressure, the TPMS warning light/beep may turn on after the tires cool and pressure drops below specification.*
  Also, an illuminated TPMS warning light, resulting from the tire air pressure dropping due to cold ambient temperature, may turn off if the ambient temperature rises. In this case, it will also be necessary to adjust the tire air pressures. If the TPMS warning light illuminates due to a drop in tire air pressure, make sure to check and adjust the tire air pressures.
- *After adjusting the tire air pressures, it may require some time for the TPMS warning light to turn off. If the TPMS warning light remains illuminated, drive the vehicle at a speed of at least 25 km/h (16 mph) for 10 minutes, and then verify that it turns off.*
- *Tires lose air naturally over time and the TPMS cannot tell if the tires are getting too soft over time or you have a flat. However, when you find one low tire in a set of four- that is an indication of trouble; you should have someone drive the vehicle slowly forward so you can inspect any low tire for cuts and any metal objects sticking through tread or sidewall. Put a few drops of water in the valve stem to see if it bubbles indicating a bad valve. Leaks need to be addressed by more than simply refilling the trouble tire as leaks are dangerous - take it to an Authorized Mazda Dealer which has all the equipment to fix tires, TPMS systems and order the best replacement tire for your vehicle.*

If the warning light illuminates again even after the tire pressures are adjusted, there may be a tire puncture. Replace the punctured tire with the temporary spare tire (page 7-7).

NOTE
A tire pressure sensor is not installed to the temporary spare tire. The warning light will flash continuously while the temporary spare tire is being used.

Warning light flashes

When the warning light flashes, there may be a system malfunction. Consult an Authorized Mazda Dealer.

▼System Error Activation

When the warning light flashes, there may be a system malfunction. Consult an Authorized Mazda Dealer.
A system error activation may occur in the following cases:

- When there is equipment or a device near the vehicle using the same radio frequency as that of the tire pressure sensors.
- When using the following devices in the vehicle that may cause radio interference with the receiver unit.
  - A digital device such as a personal computer.
  - A current converter device such as a DC-AC converter.
- When excess snow or ice adheres to the vehicle, especially around the wheels.
- When the tire pressure sensor batteries are exhausted.
- When using a wheel with no tire pressure sensor installed.
- When using tires with steel wire reinforcement in the side walls.
- When using tire chains.

▼Tires and Wheels

⚠ CAUTION

When inspecting or adjusting the tire air pressures, do not apply excessive force to the stem part of the wheel unit. The stem part could be damaged.

Changing tires and wheels

The following procedure allows the TPMS to recognize a tire pressure sensor's unique ID signal code whenever tires or wheels are changed, such as changing to and from winter tires.

NOTE
Each tire pressure sensor has a unique ID signal code. The signal code must be registered with the TPMS before it can work. The easiest way to do it is to have an Authorized Mazda Dealer change your tire and complete ID signal code registration.

When having tires changed at an Authorized Mazda Dealer

When an Authorized Mazda Dealer changes your vehicle's tires, they will complete the tire pressure sensor ID signal code registration.

When changing tires yourself

If you or someone else changes tires, you or someone else can also undertake the steps for the TPMS to complete the ID signal code registration.

1. After tires have been changed, switch the ignition ON, then back to ACC or OFF.
2. Wait for about 15 minutes.

3. After about 15 minutes, drive the vehicle at a speed of at least 25 km/h (16 mph) for 10 minutes and the tire pressure sensor ID signal code will be registered automatically.

NOTE
If the vehicle is driven within about 15 minutes of changing tires, the tire pressure monitoring system warning light will flash because the sensor ID signal code would not have been registered. If this happens, park the vehicle for about 15 minutes, after which the sensor ID signal code will register upon driving the vehicle for 10 minutes.

Replacing tires and wheels

⚠ CAUTION

- ➢ *When replacing/repairing the tires or wheels or both, have the work done by an Authorized Mazda Dealer, or the tire pressure sensors may be damaged.*
- ➢ *The wheels equipped on your Mazda are specially designed for installation of the tire pressure sensors. Do not use non-genuine wheels, otherwise it may not be possible to install the tire pressure sensors.*

Be sure to have the tire pressure sensors installed whenever tires or wheels are replaced.
When having a tire or wheel or both replaced, the following types of tire pressure sensor installations are possible.

- The tire pressure sensor is removed from the old wheel and installed to the new one.
- The same tire pressure sensor is used with the same wheel. Only the tire is replaced.
- A new tire pressure sensor is installed to a new wheel.

NOTE
- *The tire pressure sensor ID signal code must be registered when a new tire pressure sensor is purchased. For purchase of a tire pressure sensor and registration of the tire pressure sensor ID signal code, consult an Authorized Mazda Dealer.*
- *When reinstalling a previously removed tire pressure sensor to a wheel, replace the grommet (seal between valve body/sensor and wheel) for the tire pressure sensor.*

Parking Sensor System*

The parking sensor system uses ultrasonic sensors to detect obstructions around the vehicle while parking the vehicle in a garage or during parallel parking when the vehicle is driven at a speed of about 10 km/h (6 mph) or less. The system is equipped with an assist device to notify the driver of the approximate distance from the vehicle to the surrounding obstruction using a beep sound.

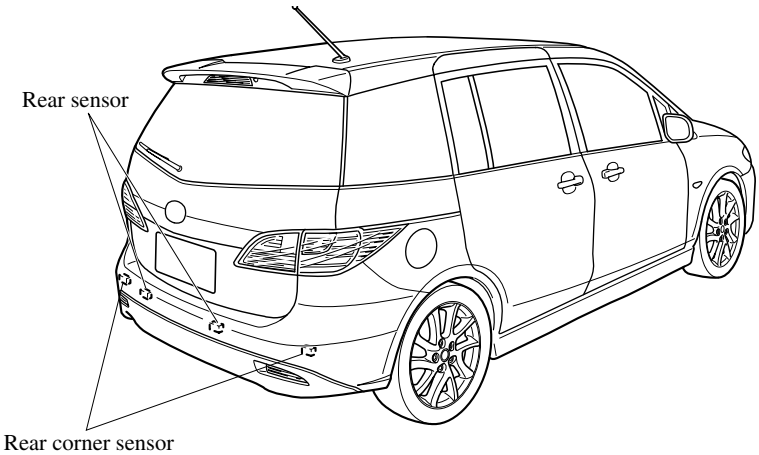

⚠ WARNING

Do not rely completely on the parking sensor system and be sure to confirm the safety around your vehicle visually when driving.

This system can assist the driver in operating the vehicle in the forward and backward directions while parking. The detection ranges of the sensors are limited, therefore, driving the vehicle while relying only on the system may cause an accident. Always confirm the safety around your vehicle visually when driving.

 *Some models.

NOTE

- *Do not install any accessories within the detection ranges of the sensors. It may affect the system operation.*
- *Depending on the type of obstruction and the surrounding conditions, the detection range of a sensor may narrow, or the sensors may not be able to detect obstructions.*
- *The system may not operate normally under the following conditions:*
  - *Mud, ice, or snow is adhering to the sensor area (Returns to normal operation when removed).*
  - *The sensor area is frozen (Returns to normal operation when the ice is thawed).*
  - *The sensor is covered by a hand.*
  - *The sensor is excessively shocked.*
  - *The vehicle is excessively tilted.*
  - *Under extremely hot or cold weather conditions.*
  - *The vehicle is driven on bumps, inclines, gravel, or grass covered roads.*
  - *Anything which generates ultrasound is near the vehicle, such as another vehicle's horn, the engine sound of a motorcycle, the air brake sound of a large-sized vehicle, or another vehicle's sensors.*
  - *The vehicle is driven in heavy rain or in road conditions causing water-splash.*
  - *A commercially-available fender pole or an antenna for a radio transmitter is installed to the vehicle.*
  - *The vehicle is moving towards a tall or square curbstone.*
  - *An obstruction is too close to the sensor.*
- *Obstructions under the bumper may not be detected. Obstructions that are lower than the bumper or thin which may have been initially detected but are no longer detected as the vehicle approaches more closely.*
- *The following types obstructions may not be detected:*
  - *Thin objects such as wire or rope*
  - *Things which absorb sonic waves easily such as cotton or snow*
  - *Angular shaped objects*
  - *Very tall objects, and those which are wide at the top*
  - *Small, short objects*
- *Always have the system inspected at an Authorized Mazda Dealer if any shock is applied to the bumpers, even in a minor accident. If the sensors are deviated, they cannot detect obstructions.*
- *The system may have a malfunction if the beep does not operate or the indicator light does not illuminate when the park assist sensors switch is turned on. Consult an Authorized Mazda Dealer.*

▼Sensor Detection Range

The sensors detect obstructions within the following range.

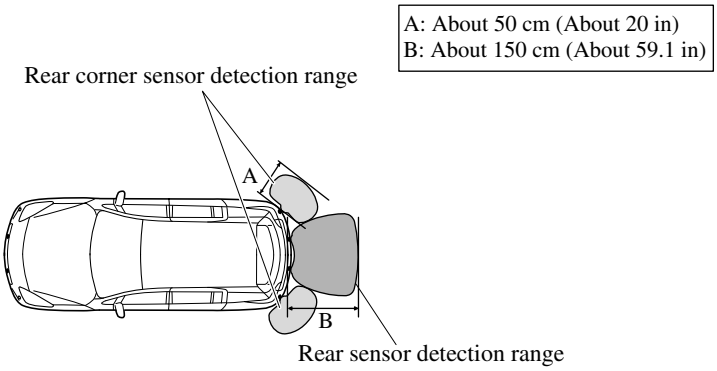

▼Park Assist Sensor System Operation

The switch can be activated when the ignition is switched ON, the shift lever is in any position except reverse (R), and the vehicle speed is about 10 km/h (6 mph) or less.
When the parking sensor switch is pressed, a beep sound is heard and the indicator light in the switch illuminates.

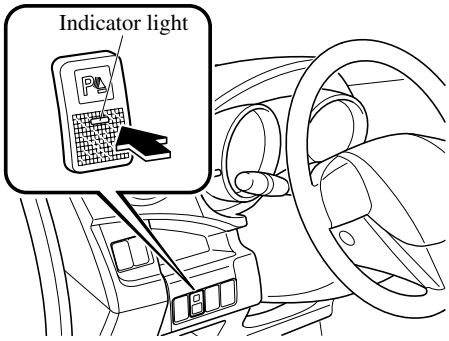

NOTE
If the system is cancelled, it will not restore automatically even when the vehicle speed is decreased to 10 km/h (6 mph) or less.

Sensor detection condition

The system can be used when the ignition is switched ON and the Park Assist Sensor Switch has been turned on.
The system will then operate when the shift lever is placed in reverse (R).
The sensors detect obstructions under the following conditions:

Sensor	Condition
Rear Sensor	The shift lever is in reverse (R).
Rear Corner Sensor	The shift lever is in reverse (R), and the vehicle speed is about 10 km/h (6 mph) or less.

The system is cancelled under the following conditions:
- The vehicle speed is 10 km/h (6 mph) or more.
- The parking sensor switch is pressed while the parking sensor is in operation.

▼Parking Sensor Warning Beep

Obstruction detection sound

The beeper sounds as follows while the system is operating.

Rear Sensor

Distance between vehicle and obstruction Rear Sensor	Beeper sound*1
Approx. 150—60 cm (59.0—24.0 in)	Slow intermittent sound
Approx. 60—45 cm (23—18 in)	Medium intermittent sound
Approx. 45—35 cm (17—14 in)	Fast intermittent sound
Within approx. 35 cm (14 in)	Continuous sound

*1 The speed of the intermittent sound increases as the vehicle approaches the obstruction.

Rear Corner Sensor

Distance between vehicle and obstruction Rear Corner Sensor	Beeper sound*1
Approx. 50—37 cm (19—15 in)	Medium intermittent sound
Approx. 37—25 cm (14.0—9.9 in)	Fast intermittent sound
Within approx. 25 cm (9.8 in)	Continuous sound

*1 The speed of the intermittent sound increases as the vehicle approaches the obstruction.

Parking sensor malfunction sound

In the following cases, a problem with the system may be indicated.

Condition	Action
• The beep sound is not heard even if the shift lever is shifted to the reverse (R). • Beep sound is heard and the indicator light in the parking sensor switch flashes.	The system may have a malfunction. Have the vehicle inspected at an Authorized Mazda Dealer as soon as possible.
The intermittent sound of the buzzer is heard five times.	Remove any foreign material from the sensor area. If the system does not recover, have the vehicle inspected at an Authorized Mazda Dealer.

NOTE

The beep sound which indicates a system malfunction may not be heard if the ambient temperature is extremely cold, or mud, ice, or snow adheres to the sensor area. Remove any foreign material from the sensor area.

Instrument Cluster and Indicators

Meters and Gauges

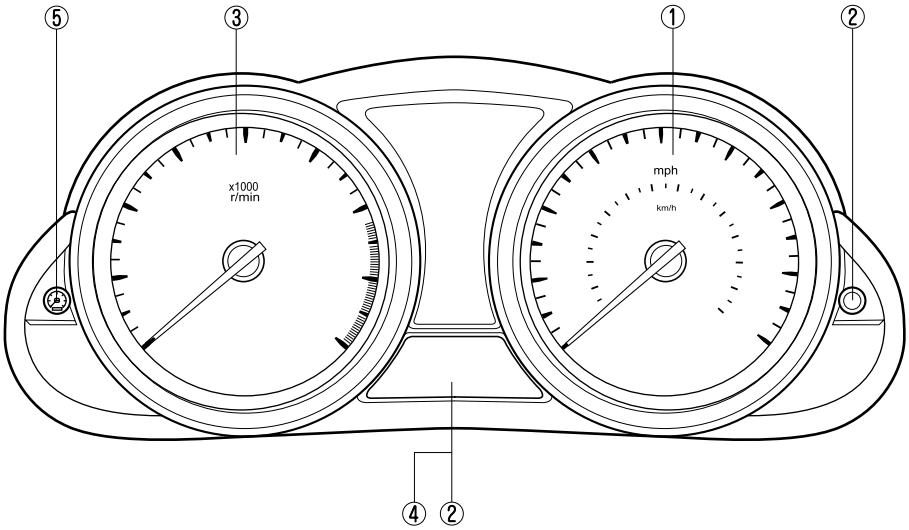

① Speedometer ..... page 5-41
② Odometer, Trip Meter and Trip Meter Selector ..... page 5-41
③ Tachometer ..... page 5-42
④ Fuel Gauge ..... page 5-42
⑤ Dashboard Illumination ..... page 5-43

▼Speedometer

The speedometer indicates the speed of the vehicle.

▼Odometer, Trip Meter and Trip Meter Selector

The display mode can be changed between trip meter A and trip meter B by pressing the selector while one of them is displayed. The selected mode will be displayed.

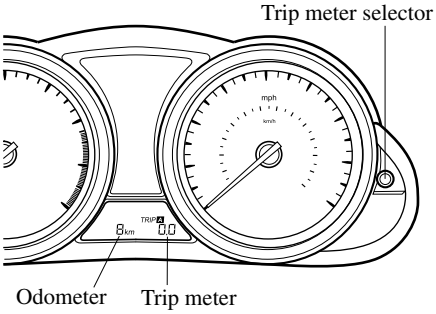

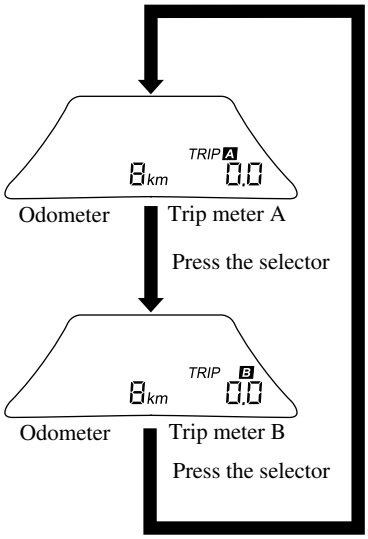

NOTE

When the ignition is switched to ACC or the ignition is switched off, the odometer or trip meters cannot be displayed, however, pressing the selector button can inadvertently switch the trip meters or reset them during an approximate ten-minute period in the following cases:

- *After the ignition is switched to ACC or the ignition is switched off from ON.*
- *After the driver's door is opened.*

Odometer

The odometer records the total distance the vehicle has been driven.

Trip meter

The trip meter can record the total distance of two trips. One is recorded in trip meter A, and the other is recorded in trip meter B.

For instance, trip meter A can record the distance from the point of origin, and trip meter B can record the distance from where the fuel tank is filled.

When trip meter A is selected, pressing the selector again within one second will change to trip meter B mode.

When trip meter A is selected, TRIP A will be displayed. When trip meter B is selected, TRIP B will be displayed.

The trip meter records the total distance the vehicle is driven until the meter is again reset. Return it to “0.0” by holding the selector depressed for 1 second or more. Use this meter to measure trip distances and to compute fuel consumption.

NOTE

- *Only the trip meters record tenths of kilometers (miles).*
- *The trip record will be erased when:*
  - *The power supply is interrupted (blown fuse or the battery is disconnected).*
  - *The vehicle is driven over 999.9 km (mile).*

▼Tachometer

The tachometer shows engine speed in thousands of revolutions per minute (rpm).

⚠ CAUTION

Do not run the engine with the tachometer needle in the RED ZONE. This may cause severe engine damage.

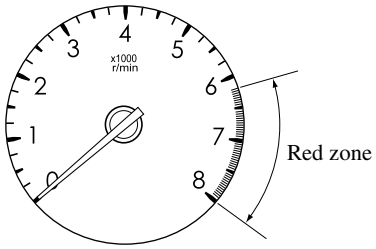

▼Fuel Gauge

The fuel gauge shows approximately how much fuel is remaining in the tank when the ignition is switched ON.
We recommend keeping the tank over 1/4 full.

Full

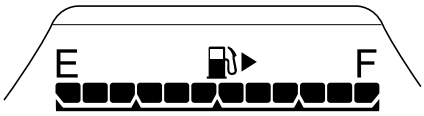

1/4 Full

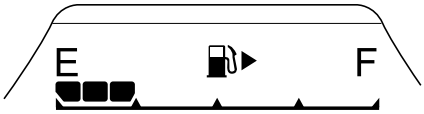

If the gauge indicates that the fuel level is near E, refuel as soon as possible.

NOTE

- *After refueling, it may require some time for the indicator to stabilize. In addition, the indicator may deviate while driving on a slope or curve since the fuel moves in the tank.*
- *The direction of the arrow ( ) indicates that the fuel-filler lid is on the right side of the vehicle.*

▼Dashboard Illumination

Rotate the knob to adjust the brightness of the instrument cluster and other illuminations in the dashboard.

NOTE

- *The brightness of dashboard illuminations can be adjusted when the headlight switch is in the or position.*
- *When the dashboard illumination brightness cannot be adjusted any more, a beep sound will be heard.*

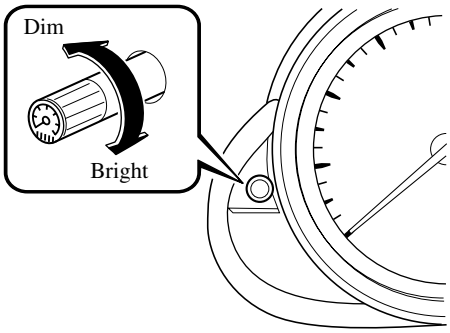

Canceling the illumination dimmer

When the headlight switch is in the or position, the illumination of the instrument cluster and the information display dims.

When driving on snowy or foggy roads, or in other situations when the instrument cluster or information display's visibility is reduced due to glare from surrounding brightness, cancel the illumination dimmer and increase the illumination intensity.

To cancel the illumination dimmer, press the dashboard illumination knob.

NOTE

- *This symbol ( ) indicates the knob to adjust the brightness of the dashboard illumination.*
- *If the illumination dimmer is cancelled, the instrument cluster and the information display will not dim when the headlight switch is turned to the or position again. Press the dashboard illumination knob to activate the illumination dimmer.*

Warning/Indicator Lights and Beep Sounds

Warning/Indicator Lights

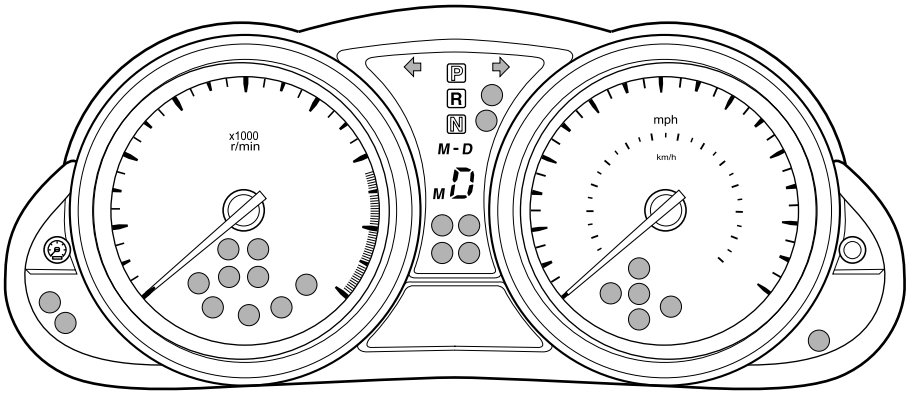

Warning/Indicator lights will appear in any of the highlighted areas

Signal	Warning/Indicator Lights	Page
BRAKE	Brake System Warning Light	5-46
	Malfunction Warning Light	5-47
	Charging System Warning Light	5-48
	Engine Oil Pressure Warning Light	5-48
	Check Engine Light	5-49
	High Engine Coolant Temperature Warning Light (Red)	5-49
ABS	ABS Warning Light	5-47

Warning/Indicator Lights and Beep Sounds

Signal	Warning/Indicator Lights	Page
	Air Bag/Front Seat Belt Pretensioner System Warning Light	5-50
	Low Fuel Warning Light	5-50
	Check Fuel Cap Warning Light	5-50
	Seat Belt Warning Light	5-51
	Door-Ajar Warning Light	5-51
	Low Washer Fluid Level Warning Light	5-51
AT	Automatic Transaxle Warning Light	5-51
	Tire Pressure Monitoring System Warning Light	5-52
	Security Indicator Light	5-54
	Headlight High-Beam Indicator Light	5-54
PRNDM	Shift Position Indicator Light	5-54
	Low Engine Coolant Temperature Indicator Light (Blue)	5-55
	TCS/DSC Indicator Light	5-55
OFF	DSC OFF Indicator Light	5-55
CRUISE	Cruise Main Indicator Light (Amber)/Cruise Set Indicator Light (Green)	5-55
	Lights-On Indicator Light	5-56

Warning/Indicator Lights and Beep Sounds

Signal	Warning/Indicator Lights	Page
	Power Steering Malfunction Indicator Light	5-56
	Turn Signal/Hazard Warning Indicator Lights	5-56

▼Brake System Warning Light

This warning has the following functions:

Parking brake warning/Warning light inspection

The light illuminates when the parking brake is applied with the ignition switched to START or ON. It turns off when the parking brake is fully released.

Low brake fluid level warning

If the brake warning light remains illuminated even though the parking brake is released, the brake fluid may be low or there could be a problem with the brake system. Park the vehicle in a safe place immediately and contact an Authorized Mazda Dealer.

WARNING

Do not drive with the brake system warning light illuminated. Contact an Authorized Mazda Dealer to have the brakes inspected as soon as possible:

Driving with the brake system warning light illuminated is dangerous. It indicates that your brakes may not work at all or that they could completely fail at any time. If this light remains illuminated, after checking that the parking brake is fully released, have the brakes inspected immediately.

CAUTION

In addition, the effectiveness of the braking may diminish so you may need to depress the brake pedal more strongly than normal to stop the vehicle.

▼Malfunction Warning Light

When the ignition is switched ON, the malfunction warning light illuminates and then turns off after a few seconds.
The light stays on if the brake switch has a malfunction. Consult an Authorized Mazda Dealer.

WARNING

Do not drive the vehicle with the malfunction warning light illuminated.

Driving with the malfunction warning light illuminated is dangerous because the brake lights and engine control system may not operate normally due to a brake switch malfunction which could lead to an accident. Have your vehicle inspected by an Authorized Mazda Dealer.

▼ABS Warning Light

The warning light stays on for a few seconds when the ignition is switched ON.

If the ABS warning light stays on while you're driving, the ABS control unit has detected a system malfunction. If this occurs, your brakes will function normally as if the vehicle had no ABS.
Should this happen, consult an Authorized Mazda Dealer as soon as possible.

NOTE

- *When the engine is jump-started to charge the battery, uneven rpm occurs and the ABS warning light may illuminate. If this occurs, it is the result of the weak battery and does not indicate an ABS malfunction. Recharge the battery.*
- *The brake assist system does not operate while the ABS warning light is illuminated.*

▼Electronic Brake Force Distribution System Warning

If the electronic brake force distribution control unit determines that some components are operating incorrectly, the control unit may illuminate the brake system warning light and the ABS warning light on simultaneously. The problem is likely to be the electronic brake force distribution system.

Warning/Indicator Lights and Beep Sounds

WARNING

Do not drive with both the ABS warning light and brake warning light illuminated. Have the vehicle towed to an Authorized Mazda Dealer to have the brakes inspected as soon as possible:

Driving when the brake system warning light and ABS warning light are illuminated simultaneously is dangerous.
When both lights are illuminated, the rear wheels could lock more quickly in an emergency stop than under normal circumstances.

▼Charging System Warning Light

This warning light illuminates when the ignition is switched ON and turns off when the engine is started.

If the warning light illuminates while driving, it indicates a malfunction of the alternator or of the charging system. Drive to the side of the road and park off the right-of-way. Consult an Authorized Mazda Dealer.

CAUTION

Do not continue driving when the charging system warning light is illuminated because the engine could stop unexpectedly.

▼Engine Oil Pressure Warning Light

This warning light illuminates when the ignition is switched ON and turns off when the engine is started.

This warning light indicates low engine oil pressure.

CAUTION

Do not run the engine if the oil pressure is low. Otherwise, it could result in extensive engine damage.

If the light illuminates while driving:

1. Drive to the side of the road and park off the right-of-way on level ground.
2. Turn off the engine and wait 5 minutes for the oil to drain back into the oil pan.
3. Inspect the engine oil level (page 8-21). If it's low, add the appropriate amount of engine oil while being careful not to overfill.

CAUTION

Do not run the engine if the oil level is low. Otherwise, it could result in extensive engine damage.

4. Start the engine and check the warning light.

If the light remains illuminated even though the oil level is normal or after adding oil, stop the engine immediately and have your vehicle towed to an Authorized Mazda Dealer.

▼Check Engine Light

This indicator light illuminates when the ignition is switched ON and turns off when the engine is started.

If this light illuminates while driving, the vehicle may have a problem. It is important to note the driving conditions when the light illuminated and consult an Authorized Mazda Dealer.

The check engine light may illuminate in the following cases:
- The fuel tank level being very low or approaching empty.
- The engine's electrical system has a problem.
- The emission control system has a problem.
- The fuel-filler cap is missing or not tightened securely.

If the check engine light remains on or flashes continuously, do not drive at high speeds and consult an Authorized Mazda Dealer as soon as possible.

▼High Engine Coolant Temperature Warning Light (Red)

When the ignition is switched ON, the light illuminates momentarily and then turns off.
The light flashes when the engine coolant temperature is extremely high, and illuminates when the engine coolant temperature increases further.

Handling Procedure

Flashing light

Drive slowly to reduce engine load.

Illuminated light

This indicates the possibility of overheating. Park the vehicle in a safe place immediately and stop the engine. Refer to Overheating (page 7-14).

⚠ CAUTION

Do not drive the vehicle with the high engine coolant temperature warning light illuminated. Otherwise, it could result in damage to the engine.

Warning/Indicator Lights and Beep Sounds

▼Air Bag/Front Seat Belt Pretensioner System Warning Light

If the air bag/front seat belt pretensioner system is working properly, the warning light illuminates when the ignition is switched ON or after the engine is cranked. The warning light turns off after a specified period of time.

A system malfunction is indicated if the warning light constantly flashes, constantly illuminates or does not illuminate at all when the ignition is switched ON. If any of these occur, consult an Authorized Mazda Dealer as soon as possible. The system may not operate in an accident.

⚠ WARNING

Never tamper with the air bag/ pretensioner systems and always have an Authorized Mazda Dealer perform all servicing and repairs:

Self-servicing or tampering with the systems is dangerous. An air bag/ pretensioner could accidentally activate or become disabled causing serious injury or death.

▼Low Fuel Warning Light

This warning light signals that the fuel tank will soon be empty.
Refuel as soon as possible.

▼Check Fuel Cap Warning Light

This warning light illuminates for a few seconds when the ignition is switched ON.

If the check fuel cap warning light illuminates while driving, the fuel-filler cap may not be installed properly. Stop the engine and reinstall the fuel-filler cap. Refer to Fuel-Filler Cap on page 3-20.

▼Seat Belt Warning Light

With warning light for front passenger's seat

The seat belt warning light illuminates if the driver or front passenger's seat is occupied and the seat belt is not fastened when the ignition switched ON.

Without warning light for front passenger's seat

The seat belt warning light illuminates if the driver's seat belt is not fastened when the ignition switched ON.

▼Door-Ajar Warning Light

This warning light illuminates when any door or liftgate is not securely closed. Close the door or liftgate securely before driving the vehicle.

▼Low Washer Fluid Level Warning Light*

This warning light indicates that little washer fluid remains. Add fluid (page 8-26).

▼Automatic Transaxle Warning Light (Automatic Transaxle)

AT

This warning light stays on for a few seconds when the ignition is switched ON.
The light illuminates when the transaxle has a problem.

⚠ CAUTION

If the automatic transaxle warning light illuminates, the transaxle has an electrical problem. Continuing to drive your Mazda in this condition could cause damage to your transaxle. Consult an Authorized Mazda Dealer as soon as possible.

*Some models.

Warning/Indicator Lights and Beep Sounds

▼Tire Pressure Monitoring System (TPMS) Warning Light*

This warning light illuminates for a few seconds when the ignition is switched ON.

Thereafter, the warning light illuminates and a beep is heard when tire pressure is too low in one or more tires, and flashes when there is a system malfunction.

⚠ WARNING

If the tire pressure monitoring system warning light illuminates or flashes, or the tire pressure warning beep sound is heard, decrease vehicle speed immediately and avoid sudden maneuvering and braking:

If the tire pressure monitoring system warning light illuminates or flashes, or the tire pressure warning beep sound is heard, it is dangerous to drive the vehicle at high speeds, or perform sudden maneuvering or braking. Vehicle drivability could worsen and result in an accident.
To determine if you have a slow leak or a flat, pull over to a safe position where you can check the visual condition of the tire and determine if you have enough air to proceed to a place where air may be added and the system monitored again by an Authorized Mazda Dealer or a tire repair station.

Do not ignore the TPMS Warning Light:

Ignoring the TPMS warning light is dangerous, even if you know why it is illuminated. Have the problem taken care of as soon as possible before it develops into a more serious situation that could lead to tire failure and a dangerous accident.

Warning light illuminates/Warning beep sounds

When the warning light illuminates, and the warning beep sound is heard (about 3 seconds), tire pressure is too low in one or more tires.

*Some models.

Adjust the tire pressure to the correct tire pressure. Refer to the specification charts (page 10-6).

CAUTION

When replacing/repairing the tires or wheels or both, have the work done by an Authorized Mazda Dealer, or the tire pressure sensors may be damaged.

NOTE

- *Perform tire pressure adjustment when the tires are cold. Tire pressure will vary according to the tire temperature, therefore let the vehicle stand for 1 hour or only drive it 1.6 km (1 mile) or less before adjusting the tire pressures. When pressure is adjusted on hot tires to the cold inflation pressure, the TPMS warning light/beep may turn on after the tires cool and pressure drops below specification.*
  Also, an illuminated TPMS warning light, resulting from the tire air pressure dropping due to cold ambient temperature, may turn off if the ambient temperature rises. In this case, it will also be necessary to adjust the tire air pressures. If the TPMS warning light illuminates due to a drop in tire air pressure, make sure to check and adjust the tire air pressures.
- *After adjusting the tire air pressures, it may require some time for the TPMS warning light to turn off. If the TPMS warning light remains illuminated, drive the vehicle at a speed of at least 25 km/h (16 mph) for 10 minutes, and then verify that it turns off.*
- *Tires lose air naturally over time and the TPMS cannot tell if the tires are getting too soft over time or you have a flat. However, when you find one low tire in a set of four- that is an indication of trouble; you should have someone drive the vehicle slowly forward so you can inspect any low tire for cuts and any metal objects sticking through tread or sidewall. Put a few drops of water in the valve stem to see if it bubbles indicating a bad valve. Leaks need to be addressed by more than simply refilling the trouble tire as leaks are dangerous - take it to an Authorized Mazda Dealer which has all the equipment to fix tires, TPMS systems and order the best replacement tire for your vehicle.*

If the warning light illuminates again even after the tire pressures are adjusted, there may be a tire puncture. Replace the punctured tire with the temporary spare tire (page 7-7).

NOTE
A tire pressure sensor is not installed to the temporary spare tire. The warning light will flash continuously while the temporary spare tire is being used.

Warning light flashes

When the warning light flashes, there may be a system malfunction. Consult an Authorized Mazda Dealer.

▼Security Indicator Light

This indicator light starts flashing every two seconds when the ignition is switched from ON to ACC and the immobilizer system is armed.

The light stops flashing when the ignition is switched ON with the correct ignition key.
At this time, the immobilizer system is disarmed and the light illuminates for about three seconds and then turns off.

If the engine does not start with the correct ignition key, and the security indicator light keeps illuminating or flashing, the system may have a malfunction. Consult an Authorized Mazda Dealer.

▼Headlight High-Beam Indicator Light

This light indicates one of two things:
- The high-beam headlights are on.
- The turn signal lever is in the flash-to-pass position.

▼Shift Position Indicator Light (Automatic Transaxle)

This indicates the selected shift position.

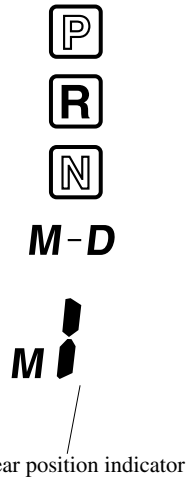

In manual mode, the “M” of the shift position indicator illuminates and the numeral for the selected gear displays in the gear position indicator.

▼Low Engine Coolant Temperature Indicator Light (Blue)

When the ignition is switched ON, the light illuminates momentarily and then turns off.
The light illuminates continuously when the engine coolant temperature is low and turns off after the engine is warm.

NOTE
If the low engine coolant temperature indicator light remains illuminated after the engine has been sufficiently warmed up, the temperature sensor could have a malfunction. Consult an Authorized Mazda Dealer.

▼TCS/DSC Indicator Light

This indicator light stays on for a few seconds when the ignition is switched ON. If the TCS or DSC is operating, the indicator light flashes.

If the light stays on, the TCS or DSC may have a malfunction and they may not operate correctly. Take your vehicle to an Authorized Mazda Dealer.

NOTE
- *In addition to the indicator light flashing, a slight lugging sound will come from the engine. This indicates that the TCS is operating properly.*
- *On slippery surfaces, such as fresh snow, it will be impossible to achieve high rpm when the TCS is on.*

▼DSC OFF Indicator Light

This indicator light stays on for a few seconds when the ignition is switched ON.
It also illuminates when the DSC OFF switch is pressed and TCS/DSC is switched off (page 5-26).

If the light stays on when the TCS/DSC is not switched off, take your vehicle to an Authorized Mazda Dealer. The dynamic stability control may have a malfunction.

▼Cruise Main Indicator Light (Amber)/Cruise Set Indicator Light (Green)*

The indicator light has two colors.

*Some models.

Cruise Main Indicator Light (Amber)

The indicator light illuminates amber when the ON switch is pressed and the cruise control system is activated.

Cruise Set Indicator Light (Green)

The indicator light illuminates green when a cruising speed has been set.

▼Lights-On Indicator Light

This indicator light illuminates when the exterior lights and dashboard illumination are on.

▼Power Steering Malfunction Indicator Light

This indicator light illuminates when the ignition is switched ON, and turns off when the engine is started.

If the light remains illuminated after the engine is started, or illuminates while driving, turn off the engine after parking in a safe place, and then start the engine again.
If the light does not illuminate after restarting the engine, this indicates that the power steering is restored and normal steering is possible.
If the light remains illuminated, the power steering is still inoperable. Consult an Authorized Mazda Dealer.

NOTE

- *The power steering system is inoperable when the power steering malfunction indicator light illuminates. Steering is possible, but requires more physical effort.*
- *Repeatedly jerking the steering wheel left and right while the vehicle is stopped or moving at slow speeds will cause the power steering system to go into protective mode which will make the steering feel heavy, but this does not indicate a malfunction. If this occurs, park the vehicle safely and wait a few minutes for the system to return to normal.*

▼Turn Signal/Hazard Warning Indicator Lights

When operating the turn signal lights, the left or right turn signal indicator light flashes to indicate which turn signal light is operating (page 5-63).

When operating the hazard warning lights, both turn signal indicator lights flash (page 5-70).

NOTE

If an indicator light remains illuminated (does not flash) or if it flashes abnormally, one of the turn signal bulbs may be burned out.

Beep Sounds

▼Air Bag/Front Seat Belt Pretensioner System Warning Beep

If a malfunction is detected in the air bag/front seat belt pretensioner systems and the warning light, a warning beep sound will be heard for about 5 seconds every minute.

The air bag and seat belt pretensioner system warning beep sound will continue to be heard for approximately 35 minutes. Have your vehicle inspected at an Authorized Mazda Dealer as soon as possible.

⚠ WARNING

Do not drive the vehicle with the air bag/front seat belt pretensioner system warning beep sounding:

Driving the vehicle with the air bag/front seat belt pretensioner system warning beep sounding is dangerous. In a collision, the air bags and the front seat belt pretensioner system will not deploy and this could result in death or serious injury.
Contact an Authorized Mazda Dealer to have the vehicle inspected as soon as possible.

Warning/Indicator Lights and Beep Sounds

▼Seat Belt Warning Beep

If the driver's seat belt is not fastened when the ignition is switched ON, a beep sound will be heard for about 6 seconds.

With warning light for front passenger's seat

If the driver or the front passenger's seat belt is not fastened and the vehicle is driven at a speed faster than about 20 km/h (12 mph), a beep sound will be heard again for a specified period of time.

Refer to Seat Belt Reminder on page 2-29.

Without warning light for front passenger's seat

If the driver's seat belt is not fastened and the vehicle is driven at a speed faster than about 20 km/h (12 mph), a beep sound will be heard again for a specified period of time.

Refer to Seat Belt Reminder on page 2-29.

▼Ignition Key Reminder

If the ignition is switched off or the ignition is switched to ACC with the key inserted, a continuous beep sound will be heard when the driver's door is opened.

NOTE

A personalized function is available to change the sound volume for the ignition key reminder. Refer to Personalization Features on page 10-8.

▼Lights-On Reminder

If lights are on and the key is removed from the ignition switch, a continuous beep sound will be heard when the driver's door is opened.

NOTE

A personalized function is available to change the sound volume for the lights-on reminder. Refer to Personalization Features on page 10-8.

▼Tire Inflation Pressure Warning Beep *

The warning beep sound will be heard for about 3 seconds when there is any abnormality in tire inflation pressures (page 5-28).

 *Some models.

Lighting Control

▼Headlights

Turn the headlight switch to turn the headlights, other exterior lights and dashboard illumination on or off.

NOTE
To prevent discharging the battery, do not leave the lights on while the engine is off unless safety requires them.

Without AUTO position

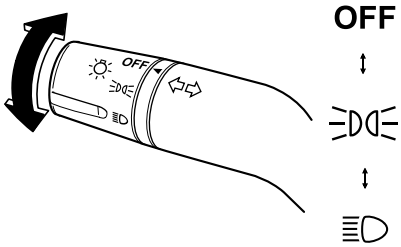

Switch Position	OFF		
Headlights	Off	Off	On
Taillights Parking lights License lights Side-marker lights Dashboard illumination	Off	On	On

With AUTO position

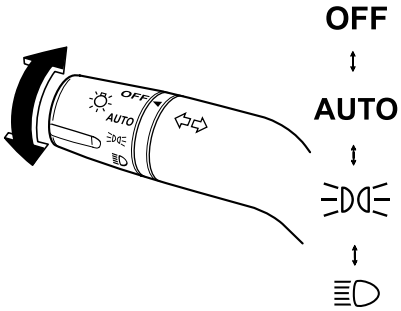

Switch Position	OFF	AUTO		
Headlights	Off	Auto	Off	On
Taillights Parking lights License lights Side-marker lights Dashboard illumination	Off		On	On

AUTO (Auto-light control)

When the headlight switch is in the AUTO position and the ignition is switched ON, the light sensor senses the surrounding lightness or darkness and automatically turns the headlights, other exterior lights and dashboard illumination on or off (see chart above).

CAUTION

- *Do not shade the light sensor by adhering a sticker or a label on the windshield. Otherwise the light sensor will not operate correctly.*

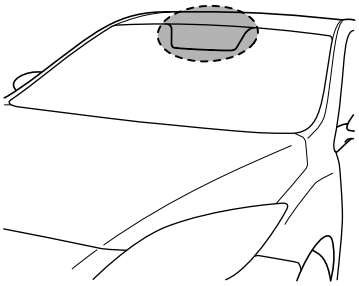

- *The light sensor also works as a rain sensor for the auto-wiper control. Keep hands and scrapers clear of the windshield when the wiper lever is in the AUTO position and the ignition is switched ON as fingers could be pinched or the wipers and wiper blades damaged when the wipers activate automatically. If you are going to clean the windshield, be sure the wipers are turned off completely — this is particularly important when clearing ice and snow — when it is particularly tempting to leave the engine running.*

NOTE

- *The headlights, other exterior lights and dashboard illumination may not turn off immediately even if the surrounding area becomes well-lit because the light sensor determines that it is nighttime if the surrounding area is continuously dark for several minutes such as inside long tunnels, traffic jams inside tunnels, or in indoor parking lots.*
  In this case, the light turns off if the light switch is turned to the OFF position.
- *The dashboard illumination can be adjusted by rotating the knob in the instrument cluster. Also, the day/night mode can be changed by pressing the knob. To adjust the brightness of the dashboard illumination: Refer to Dashboard Illumination on page 5-43.*
- *When the headlight switch is in the AUTO position and the ignition is switched to ACC or the ignition is switched off, the headlights, other exterior lights and dashboard illumination will turn off.*
- *The sensitivity of the AUTO lights may be changed by an Authorized Mazda Dealer. Refer to Personalization Features on page 10-8.*

Xenon fusion headlight bulbs ✱

The low-beam bulbs of the headlights have xenon fusion bulbs that produce a bright white beam over a wide area.

⚠ WARNING

Do not replace the xenon fusion bulbs yourself

Replacing the xenon fusion bulbs yourself is dangerous. Because the xenon fusion bulbs require high voltage, you could receive an electric shock if the bulbs are handled incorrectly. Consult an Authorized Mazda Dealer when the replacement is necessary.

NOTE

If the headlights flicker, or the brightness weakens, the bulb-life may be depleted and a replacement is necessary. Consult an Authorized Mazda Dealer.

✱Some models.

▼Lights-On Reminder

If lights are on and the key is removed from the ignition switch, a continuous beep sound will be heard when the driver's door is opened.

NOTE
A personalized function is available to change the sound volume for the lights-on reminder. Refer to Personalization Features on page 10-8.

▼Headlight High-Low Beam

Press the lever forward to turn on the high beams.
Pull the lever back to its original position for the low beams.

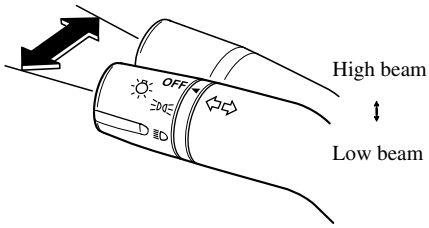

▼Flashing the Headlights

To flash the headlights, pull the lever fully towards you (the headlight switch does not need to be on). The lever will return to the normal position when released.

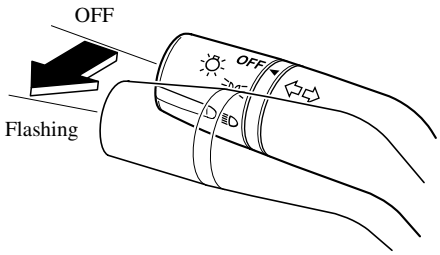

▼Headlight Leveling*

The number of passengers and weight of cargo in the luggage compartment change the angle of the headlights.
The headlight leveling switch is used to adjust the angle of the headlights manually.

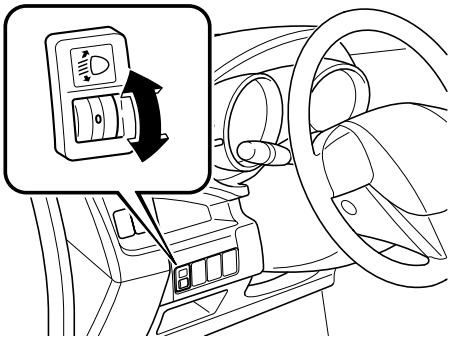

 *Some models.

Select the proper headlight angle from the following chart.

Front seat		Rear seat*1	Load	Switch Position
Driver	Passenger			
×	—	—	—	0
×	×	—	—	0
×	×	×	—	1
×	×	×	×	2
×	—	—	×	3

×: Yes
—: No
*1 Second-row and third-row seats

▼Daytime Running Lights (Canada)

In Canada, vehicles must be driven with the headlights on during daytime operation.

For that reason, the daytime running lights automatically turn on when the ignition is switched ON.

NOTE
The Daytime Running Lights turn off when the parking brake is applied.

Turn and Lane-Change Signals

Turn signals

Move the signal lever down (for a left turn) or up (for a right turn) to the stop position. The signal will self-cancel after the turn is completed.

If the indicator light continues to flash after a turn, manually return the lever to its original position.

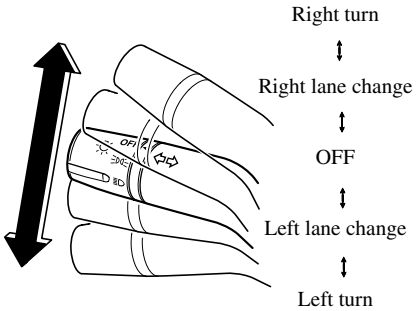

Green indicators on the dashboard show which signal is working.

Lane-change signals

Move the lever halfway toward the direction of the change —until the indicator flashes— and hold it there. It will return to the off position when released.

NOTE
- *If an indicator light stays on without flashing or if it flashes abnormally, one of the turn signal bulbs may be burned out.*
- *A personalized function is available to change the turn indicator sound volume. Refer to Personalization Features on page 10-8.*

Fog Lights*

The fog lights will improve visibility at night and during foggy conditions.

The headlights must be turned on to turn on the fog lights.

To turn the fog lights on, rotate the fog light switch to the position.

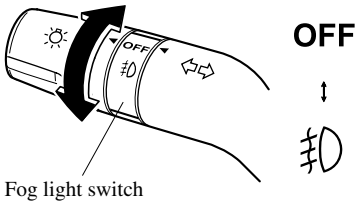

To turn the fog lights off, rotate the fog light switch to the OFF position or turn the headlights off.

NOTE

- *The fog lights will turn off when the headlights are set at high beam.*
- ***(With auto-light control)***
  If the headlight switch is in the AUTO position, the fog lights can be turned on when the headlights, the exterior lights and dashboard illumination are on.

Windshield Wipers and Washer

The ignition must be switched ON.

WARNING

Use only windshield washer fluid or plain water in the reservoir:
Using radiator antifreeze as washer fluid is dangerous. If sprayed on the windshield, it will dirty the windshield, affect your visibility, and could result in an accident.

Only use windshield washer fluid mixed with anti-freeze protection in freezing weather conditions:
Using windshield washer fluid without anti-freeze protection in freezing weather conditions is dangerous as it could freeze on the windshield and block your vision which could cause an accident.
In addition, make sure the windshield is sufficiently warmed using the defroster before spraying the washer fluid.

*Some models.

NOTE

Because heavy ice and snow can jam the wiper blades, the wiper motor is protected from motor breakdown, overheating and possible fire by a circuit breaker. This mechanism will automatically stop operation of the blades, but only for about 5 minutes.
If this happens, turn off the wiper switch and park off the right-of-way, and remove the snow and ice.
After 5 minutes, turn on the switch and the blades should operate normally. If they do not resume functioning, consult an Authorized Mazda Dealer as soon as possible. Drive to the side of the road and park off the right-of-way. Wait until the weather clears before trying to drive with the wipers inoperative.

▼Windshield Wipers

Turn the wipers on by pressing the lever up or down.

With INT position

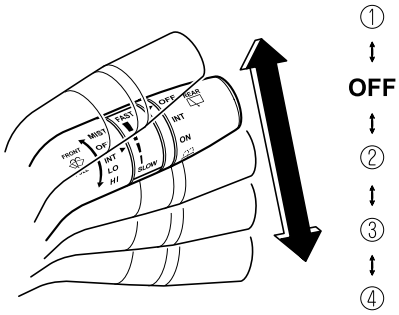

Switch Position			Wiper operation
No.	Type A	Type B	
①	⌃	MIST	Single wipe cycle (mist)
②	- - -	INT	Intermittent
③	—	LO	Low speed
④	=	HI	High speed

With AUTO position

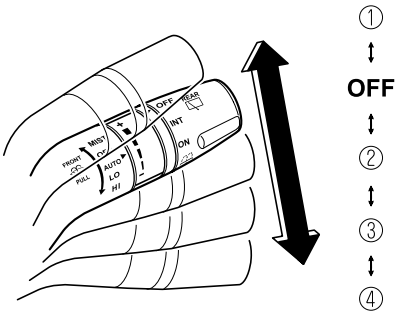

Switch Position		Wiper operation
①	MIST	Single wipe cycle (mist)
②	AUTO	Auto control
③	LO	Low speed
④	HI	High speed

Variable-speed intermittent wipers

Set the lever to the intermittent position and choose the interval timing by rotating the ring.

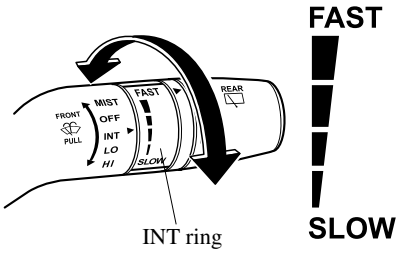

AUTO (Auto-wiper control)

When the wiper lever is in the AUTO position, the rain sensor senses the amount of rainfall on the windshield and turns the wipers on or off automatically (off—intermittent—low speed—high speed).

The sensitivity of the rain sensor can be adjusted by turning the switch on the wiper lever.
From the center position (normal), rotate the switch downward for higher sensitivity (faster response) or rotate it upward for less sensitivity (slower response).

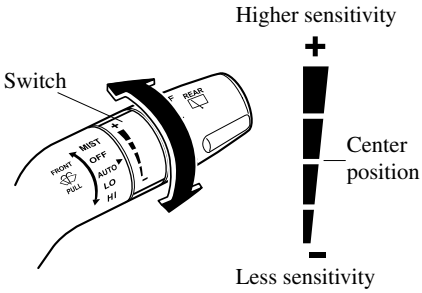

⚠ CAUTION

➢ *Do not shade the rain sensor by adhering a sticker or a label on the windshield. Otherwise the rain sensor will not operate correctly.*

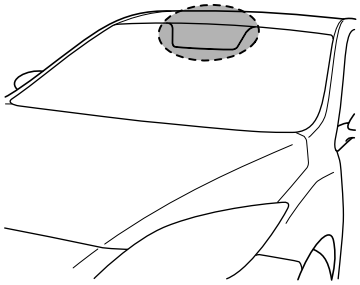

➢ *When the wiper lever is in the AUTO position and the ignition is switched ON, the wipers may move automatically in the following cases:*
  ➢ *If the windshield above the rain sensor is touched or wiped with a cloth.*
  ➢ *If the windshield is struck with a hand or other object from either outside or inside the vehicle.*

  Keep hands and scrapers clear of the windshield when the wiper lever is in the AUTO position and the ignition is switched ON as fingers could be pinched or the wipers and wiper blades damaged when the wipers activate automatically.
  If you are going to clean the windshield, be sure the wipers are turned off completely—this is particularly important when clearing ice and snow—when it is most likely that the engine is left running.

NOTE

- *Switching the auto-wiper lever from the OFF to the AUTO position while driving at a vehicle speed of 4 km/h (2 mph) or higher (or after driving the vehicle) activates the windshield wipers once, after which they operate according to the rainfall amount.*
- *The auto-wiper control may not operate when the rain sensor temperature is about –10 °C (14 °F) or lower, or about 85 °C (185 °F) or higher.*
- *If the windshield is coated with water repellent, the rain sensor may not be able to sense the amount of rainfall correctly and auto-wiper control may not operate properly.*
- *If dirt or foreign matter (Such as ice or matter containing salt water) adheres to the windshield above the rain sensor or if the windshield is iced, it could cause the wipers to move automatically. However, if the wipers cannot remove this ice, dirt or foreign matter, the auto-wiper control will stop operation. In this case, set the wiper lever to the low speed position or high speed position for manual operation, or remove the ice, dirt or foreign matter by hand to restore the auto-wiper operation.*
- *If the auto-wiper lever is left in the AUTO position, the wipers could operate automatically from the effect of strong light sources, electromagnetic waves, or infrared light because the rain sensor uses an optical sensor. It is recommended that the auto-wiper lever be switched to the OFF position other than when driving the vehicle under rainy conditions.*

▼Windshield Washer

Pull the lever toward you and hold it to spray washer fluid.

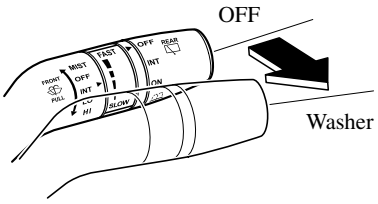

NOTE
With the wiper lever in the OFF or intermittent position/AUTO position, the wipers will operate continuously until the lever is released.

If the washer does not work, inspect the fluid level (page 8-26). If it's normal, consult an Authorized Mazda Dealer.

Rear Window Wiper and Washer

The ignition must be switched ON.

▼Rear Window Wiper

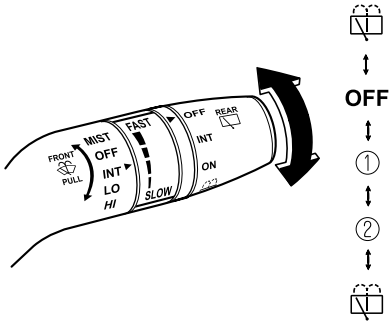

Turn the wiper on by turning the rear wiper/washer switch.

Switch Position			Wiper operation
No.	Type A	Type B	
①	▬ ▬ ▬	INT	Intermittent
②	▬▬▬	ON	Normal

▼Rear Window Washer

To spray washer fluid, turn the rear wiper/washer switch to the position. After the switch is released, the washer will stop.
If the washer does not work, inspect the fluid level (page 8-26). If it's normal and the washer still does not work, consult an Authorized Mazda Dealer.

Rear Window Defogger

The rear window defogger clears fog from the rear window.

The ignition must be switched ON.

Press the switch to turn on the rear window defogger. The rear window defogger operates for about 15 minutes and turns off automatically.
The indicator light illuminates during operation.

To turn off the rear window defogger before the 15 minutes has elapsed, press the switch again.

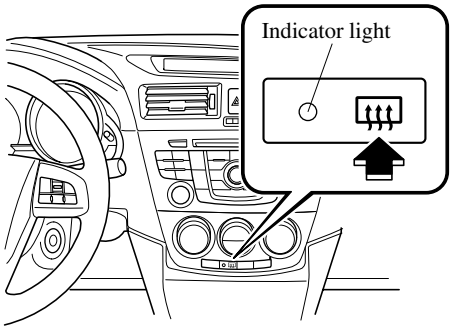

⚠ CAUTION

Do not use sharp instruments or window cleaners with abrasives to clean the inside of the rear window surface. They may damage the defogger grid inside the window.

NOTE

This defogger is not designed for melting snow. If there is an accumulation of snow on the rear window, remove it before using the defogger.

▼Mirror Defogger*

To turn on the mirror defoggers, switch the ignition ON and press the rear window defogger switch (page 5-69).

*Some models.

Horn

To sound the horn, press the mark on the steering wheel.

Hazard Warning Flasher

The hazard warning lights should always be used when you stop on or near a roadway in an emergency.

The hazard warning lights warn other drivers that your vehicle is a traffic hazard and that they must take extreme caution when near it.

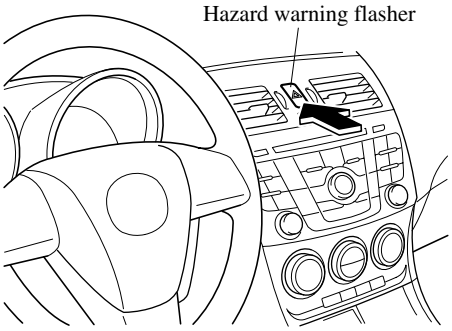

Depress the hazard warning flasher and all the turn signals will flash.

NOTE

- *The turn signals do not work when the hazard warning lights are on.*
- *Check local regulations about the use of hazard warning lights while the vehicle is being towed to verify that it is not in violation of the law.*

6 Interior Comfort

Use of various features for drive comfort, including air-conditioning and audio system.

Climate Control System 6-2
Operating Tips 6-2
Vent Operation 6-3
Fully Automatic Type 6-5
Rear Ventilation System 6-9

Audio System 6-11
Antenna 6-11
Operating Tips for Audio System 6-12
Audio Set 6-23
Audio Control Switch Operation 6-47
AUX/USB/iPod Mode 6-50
Safety Certification 6-59

Bluetooth® Audio 6-60
Bluetooth® Audio* 6-60

Bluetooth® Hands-Free 6-70
Bluetooth® Hands-Free* 6-70
Basic Bluetooth® Hands-Free Operation 6-74
Convenient Use of the Hands-Free System 6-79
Hands-Free Setting 6-85
When Bluetooth® Hands-Free Cannot be Used 6-91
Safety Certification 6-92
Mazda Bluetooth® Hands-Free Customer Service 6-92

Interior Equipment 6-93
Sunvisors 6-93
Interior Lights 6-93
Information Display 6-95
Cup Holder 6-100
Bottle Holder 6-101
Storage Compartments 6-102
Accessory Sockets 6-109

*Some models.

Operating Tips

▼Operating the Climate Control System

Operate the climate control system with the engine running.

NOTE
To prevent the battery from being discharged, do not leave the fan control dial on for a long period of time with the ignition switched ON when the engine is not running.

▼Clearing the Air Inlet

Clear all obstructions such as leaves, snow and ice from the hood and the air inlet in the cowl grille to improve the system efficiency.

▼Foggy Windows

The windows may fog up easily in humid weather. Use the climate control system to defog the windows.

To help defog the windows, operate the air conditioner to dehumidify the air.

NOTE
The air conditioner may be used along with the heater to dehumidify the air.

▼Outside/Recirculated Air Position

Use the outside air mode for ventilation or windshield defrosting. The recirculate mode should be used when the air inside tunnels or while in traffic jams is polluted, or you would like to shut off outside air for quick cooling of the interior.

▼Parking in Direct Sunlight

If the vehicle has been parked in direct sunlight during hot weather, open the windows to let warm air escape, then run the climate control system.

▼Not Using for a Long Period

Run the air conditioner about 10 minutes at least once a month to keep internal parts lubricated.

▼Check the Refrigerant before the Weather Gets Hot

Have the air conditioner checked before the weather gets hot. Lack of refrigerant may make the air conditioner less efficient.
The refrigerant specifications are indicated on a label attached to the inside of the engine compartment. Check the label before refilling the refrigerant. If the wrong type of refrigerant is used, it could result in a serious malfunction of the air conditioner.
For details, consult an Authorized Mazda Dealer.

▼Replacement of the Cabin Air Filter

Your vehicle is equipped with an air filter for the air conditioner. It is necessary to change the filter periodically as indicated in scheduled maintenance (page 8-4). Consult an Authorized Mazda Dealer for replacement of the cabin air filter.

Vent Operation

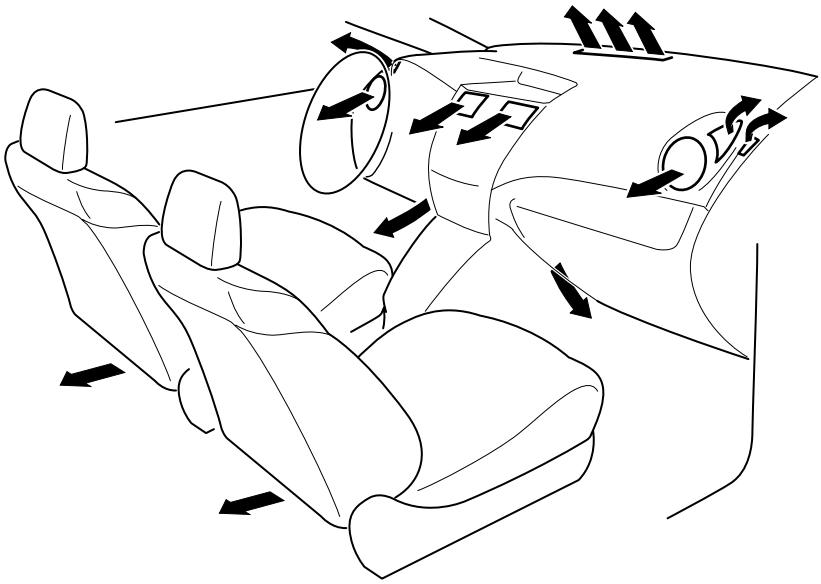

▼Adjusting the Vents

Directing airflow

Side Vents

To adjust the direction of airflow, open the vents and rotate them left and right.

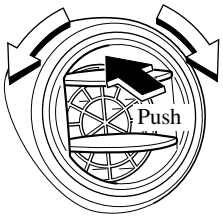

Center Vents

To adjust the direction of airflow, move the adjustment knob.

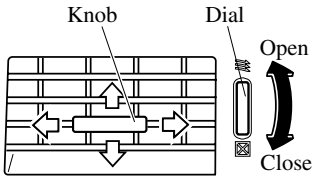

NOTE

- *When using the air conditioner under humid ambient temperature conditions, the system may blow fog from the vents. This is not a sign of trouble but a result of humid air being suddenly cooled.*
- *The air vents can be fully opened and closed by operating the dial.*

▼Selecting the Airflow Mode

Dashboard Vents

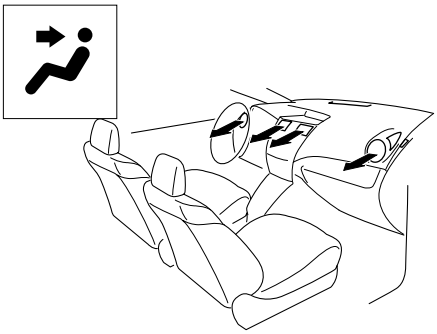

Defroster and Floor Vents

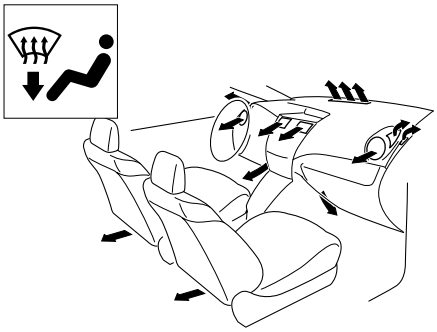

Dashboard and Floor Vents

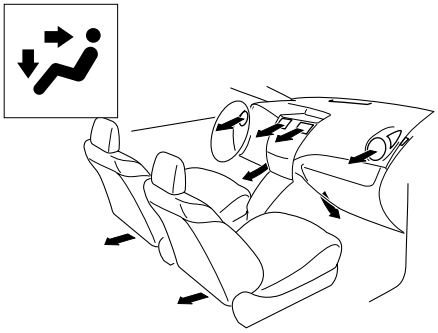

Defroster Vents

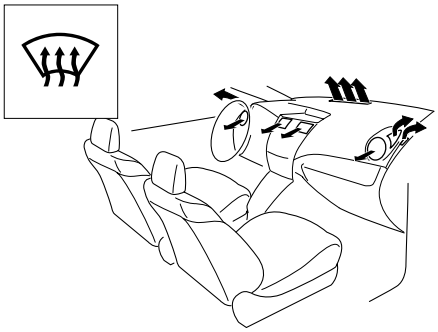

Floor Vents

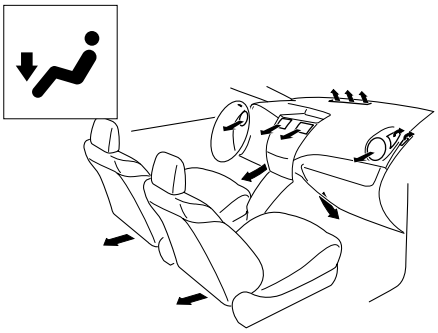

Fully Automatic Type

Climate control information is displayed on the information display.

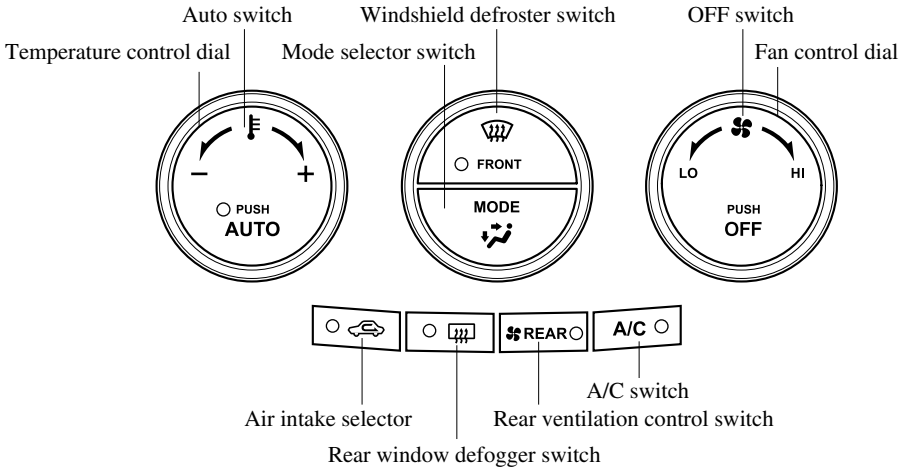

▼Control Switches

AUTO switch

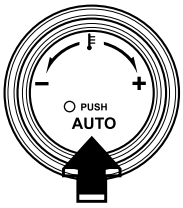

By pressing the AUTO switch the following functions will be automatically controlled in accordance with the selected set temperature:

- Airflow temperature
- Amount of airflow
- Selection of airflow mode
- Outside/Recirculated air selection
- Air conditioner operation

NOTE

AUTO switch indicator light

- *When on, it indicates AUTO operation, and the system will function automatically.*
- *If any of the following dials or switches are operated while in AUTO control, the AUTO switch indicator turns off.*
  - *Mode selector switch*
  - *Fan control dial*
  - *Windshield defroster switch*

  The functions for dials and switches other than those operated in the above continue to operate in AUTO control.

Climate Control System

OFF switch

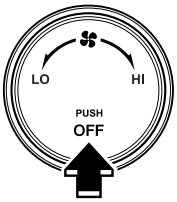

Pressing the OFF switch shuts off the climate control system.

Temperature control dial

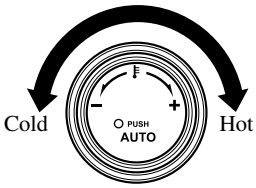

This dial controls temperature. Turn it clockwise for hot and counterclockwise for cold.

Fan control dial

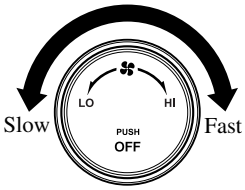

The fan has seven speeds. The selected speed will be displayed.

Mode selector switch

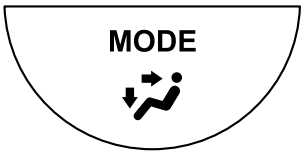

The desired airflow mode can be selected (page 6-4).

NOTE

- *With the airflow mode set to position and the temperature control dial set at a medium temperature, heated air is directed to the feet and a comparably lower air temperature will flow through the central, left and right vents.*
- *To set the air vent to , press the windshield defroster switch.*
- ***(U.S.A., Canada)***
  In the or position, the air conditioner is automatically turned on and the outside air mode is automatically selected to defrost the windshield. In the or position, the outside air mode cannot be changed to the recirculated air mode.

A/C switch

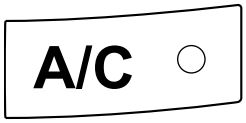

Pressing the A/C switch while the AUTO switch is turned on will turn off the air conditioning (cooling/dehumidifying functions). The air conditioning can be turned on and off by pressing the A/C switch while the fan control dial is on.

NOTE

- *The air conditioning operates when the A/C switch is pressed even if the fan is off.*
- *The air conditioner may not function when the outside temperature approaches 0 °C (32 °F).*

Air intake selector

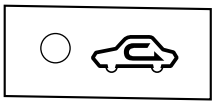

Outside or recirculated air positions can be selected. Press the switch to select outside/recirculated air positions.

Recirculated air position (indicator light illuminated)

Use this position when going through tunnels, driving in congested traffic (high engine exhaust areas) or when quick cooling is desired.

Outside air position (indicator light turned off)

Use this mode for ventilation or windshield defrosting.

WARNING

Do not use the position in cold or rainy weather:

Using the position in cold or rainy weather is dangerous as it will cause the windows to fog up. Your vision will be hampered, which could lead to a serious accident.

Windshield defroster switch

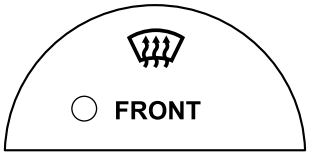

Press the switch to defrost the windshield and front door windows.

NOTE

(U.S.A., Canada)

In the position, the air conditioner is automatically turned on and the outside air mode is automatically selected to defrost the windshield. In the position, the outside air mode cannot be changed to the recirculated air mode.

▼Operation of Automatic Air Conditioning

1. Press the AUTO switch. Selection of the airflow mode, air intake selector and amount of airflow will be automatically controlled.

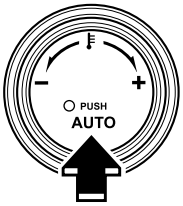

2. Use the temperature control dial to select a desired temperature.

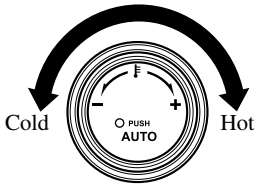

To turn off the system, press the OFF switch.

NOTE

- *Setting the temperature to maximum high or low will not provide the desired temperature at a faster rate.*
- *When selecting heat, the system will restrict airflow until it has warmed to prevent cold air from blowing out of the vents.*

▼Windshield Defrosting and Defogging

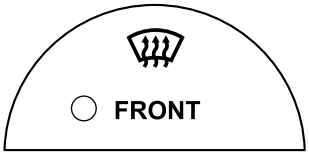

Press the windshield defroster switch.
In this position, the outside air position is automatically selected, and the air conditioner automatically turns on. The air conditioner will directly dehumidify the air to the front windshield and side windows (page 6-4). Airflow amount will be increased.

⚠ WARNING

Set the temperature control to the hot or warm position when defogging (position):

Using the position with the temperature control set to the cold position is dangerous as it will cause the outside of the windshield to fog up. Your vision will be hampered, which could lead to a serious accident.

NOTE

Use the temperature control dial to increase the air flow temperature and defog the windshield more quickly.

▼Temperature Sensor

The fully automatic air conditioner uses the temperature sensor to measure the temperature inside the passenger compartment. It then sets the passenger compartment temperature accordingly.

⚠ CAUTION

Do not obstruct the temperature sensor, otherwise the automatic air conditioner will not operate properly.

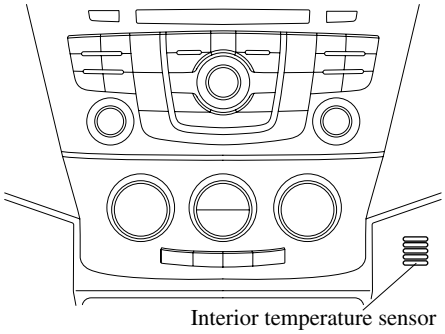

Rear Ventilation System

The rear ventilation system only blows cool air through the rear vents while the front climate control system is on. It does not blow air when the front climate control is off. The rear vents blow either outside air or recirculated air, depending on the position in which the air intake selector switch is set.
Front climate control is given priority over the rear ventilation control.

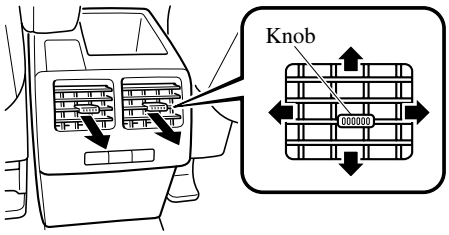

▼Control Switches

Rear ventilation control switch

To get air flowing through the rear vents, first operate the fan control dial or turn on the AUTO switch on the front climate control operation panel. Then, switch on the rear ventilation control switch on the front climate control panel, or switch on either the low or high rear vent button on the rear console.

Rear vent buttons

The rear vent switches adjust the airflow volume flowing from the rear vent.
OFF: Fan off
LO: Low speed
HI: High speed

NOTE
Only cool or cold air (no heat) blows through the rear vents while the front climate control is on. Heat for the rear passengers comes from under the front seats when the front heater is on and set to floor mode.
When pressing the rear ventilation control switch on the front control panel (with climate control system on), the rear ventilation system operates at low speed only. To change to high speed, press the HI rear vent button.

Antenna

▼Detachable Type

To remove the antenna, turn it counterclockwise.
To install the antenna, turn it clockwise.
Make sure the antenna is securely installed.

AM/FM Radio Antenna ✶

The AM/FM radio antenna receives both AM and FM signals.

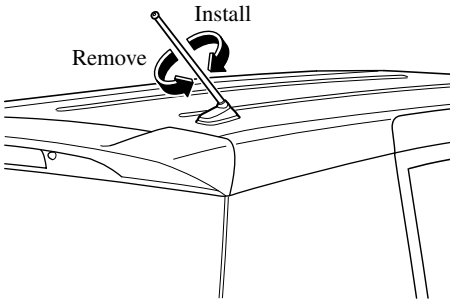

Antenna for AM/FM and Satellite Radio Antenna ✶

The antenna for AM/FM and satellite radio antenna receives both AM and FM signals and SIRIUS signals.

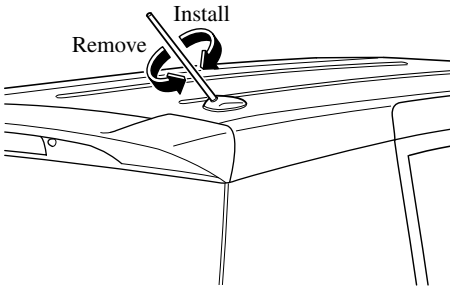

⚠ CAUTION

- *To prevent damage to the antenna, remove it before entering a car wash facility or passing beneath a low overhead clearance.*
- *Be careful around the antenna when removing snow from the roof. Otherwise the antenna could be damaged.*

NOTE

When leaving your vehicle unattended, we recommend that you remove the antenna and store it inside the vehicle.

✶Some models.

Operating Tips for Audio System

WARNING

Do not adjust the audio control switches while driving the vehicle:

Adjusting the audio while driving the vehicle is dangerous as it could distract your attention from the vehicle operation which could lead to a serious accident. Always adjust the audio while the vehicle is stopped. Even if the audio control switches are equipped on the steering wheel, learn to use the switches without looking down at them so that you can keep your maximum attention on the road while driving the vehicle.

CAUTION

For the purposes of safe driving, adjust the audio volume to a level that allows you to hear sounds outside of the vehicle including car horns and particularly emergency vehicle sirens.

NOTE

- *To prevent the battery from being discharged, do not leave the audio system on for a long period of time when the engine is not running.*
- *If a cellular phone or CB radio is used in or near the vehicle, it could cause noise to occur from the audio system, however, this does not indicate that the system has been damaged.*

▼Radio Reception

AM characteristics

AM signals bend around such things as buildings or mountains and bounce off the ionosphere. Therefore, they can reach longer distances than FM signals. Because of this, two stations may sometimes be picked up on the same frequency at the same time.

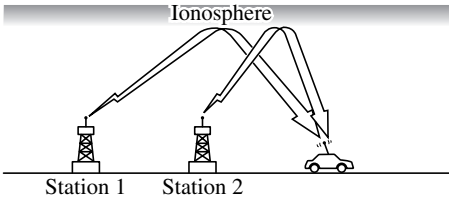

FM characteristics

An FM broadcast range is usually about 40—50 km (25—30 miles) from the source. Because of extra coding needed to break the sound into two channels, stereo FM has even less range than monaural (non-stereo) FM.

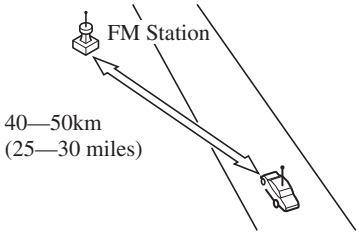

Signals from an FM transmitter are similar to beams of light because they do not bend around corners, but they do reflect. Unlike AM signals, FM signals cannot travel beyond the horizon. Therefore, FM stations cannot be received at the great distances possible with AM reception.

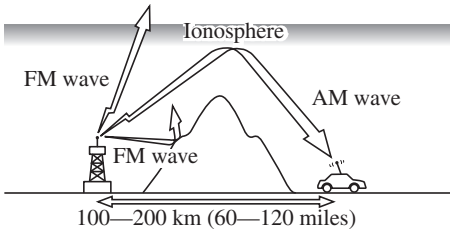

Atmospheric conditions can also affect FM reception. High humidity will cause poor reception. However, cloudy days may provide better reception than clear days.

Multipath noise

Since FM signals can be reflected by obstructions, it is possible to receive both the direct signal and the reflected signal at the same time. This causes a slight delay in reception and may be heard as a broken sound or a distortion. This problem may also be encountered when in close proximity to the transmitter.

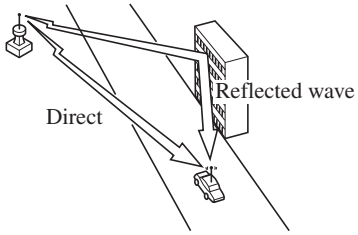

Flutter/Skip noise

Signals from an FM transmitter move in straight lines and become weak in valleys between tall buildings, mountains, and other obstacles. When a vehicle passes through such an area, the reception conditions may change suddenly, resulting in annoying noise.

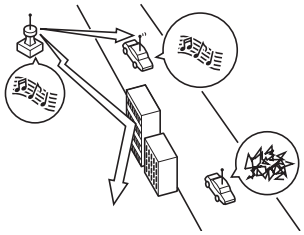

Weak signal noise

In suburban areas, broadcast signals become weak because of distance from the transmitter. Reception in such fringe areas is characterized by sound breakup.

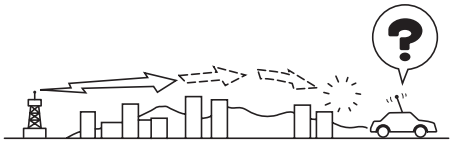

Strong signal noise

This occurs very close to a transmitter tower. The broadcast signals are extremely strong, so the result is noise and sound breakup at the radio receiver.

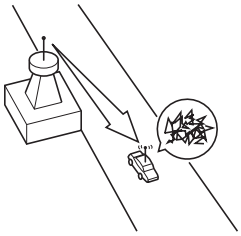

Station drift noise

When a vehicle reaches the area of two strong stations broadcasting at similar frequencies, the original station may be temporarily lost and the second station picked up. At this time there will be some noise from this disturbance.

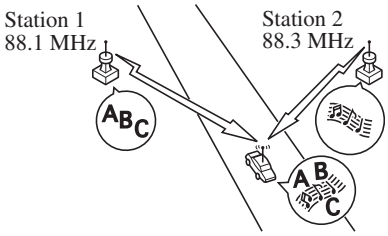

▼Operating Tips for CD Player

Condensation phenomenon

Immediately after turning on the heater when the vehicle is cold, the CD or optical components (prism and lens) in the CD player may become clouded with condensation. At this time, the CD will eject immediately when placed in the unit. A clouded CD can be corrected simply by wiping it with a soft cloth. Clouded optical components will clear naturally in about an hour. Wait for normal operation to return before attempting to use the unit.

Handling the CD player

The following precautions should be observed.

- Do not spill any liquid on the audio system.

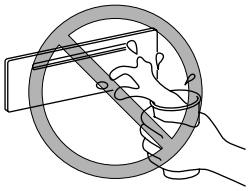

- Do not insert any objects, other than CDs, into the slot.

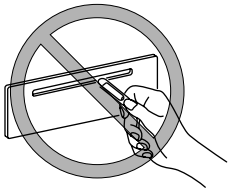

- The CD revolves at high speed within the unit. Defective (cracked or badly bent) CDs should never be used.

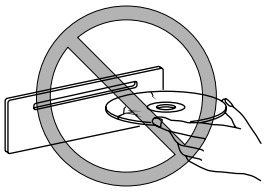

- Do not use non-conventional discs such as heart-shaped, octagonal discs, etc. The disc may not eject resulting in a malfunction.

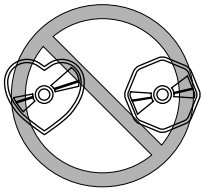

- If the memory portion of the CD is transparent or translucent, do not use the disc.

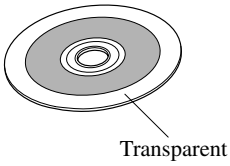

- A new CD may have rough edges on its inner and outer perimeters. If a disc with rough edges is used, proper setting will not be possible and the CD player will not play the CD. In addition, the disc may not eject resulting in a malfunction. Remove the rough edges in advance by using a ball-point pen or pencil as shown below. To remove the rough edges, rub the side of the pen or pencil against the inner and outer perimeter of the CD.

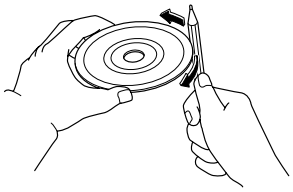

- When driving over uneven surfaces, the sound may jump.

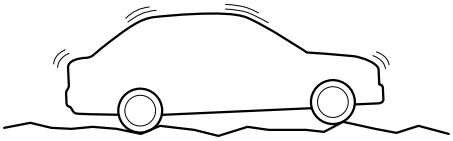

- The CD player has been designed to play CDs bearing the identification logo as shown below. No other discs can be played.

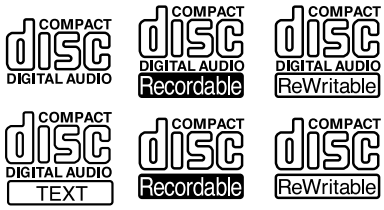

- Use discs that have been legitimately produced. If illegally-copied discs such as pirated discs are used, the system may not operate properly.
- Be sure never to touch the signal surface when handling the CDs. Pick up a CD by grasping the outer edge or the edge of the hole and the outer edge.

- Do not stick paper or tape on the CD. Avoid scratching the reverse side (the side without a label). The disc may not eject resulting in a malfunction.
- Dust, finger smudges, and dirt can decrease the amount of light reflected from the signal surface, thus affecting sound quality. If the CD should become soiled, gently wipe it with a soft cloth from the center of the CD to the edge.
- Do not use record sprays, antistatic agents, or household spray cleaners. Volatile chemicals such as benzine and thinner can also damage the surface of the CD and must not be used. Anything that can damage, warp, or fog plastic should never be used to clean CDs.
- Insert discs one by one. If two discs are inserted at the same time, the system may not operate properly.
- The CD player ejects the CD if the CD is inserted upside down. Also dirty and/or defective CDs may be ejected.
- Do not insert cleaning discs in the CD player.
- Do not insert any disc with a peel-off seal affixed to it.
- This unit may not be able to play certain CD-R/CD-RWs made using a computer or music CD recorder due to disc characteristics, scratches, smudges, dirt, etc., or due to dust or condensation on the lens inside the unit.
- Storing CDs in the vehicle exposed to direct sunlight or high temperature may damage the CD-R/CD-RWs, and make them unplayable.
- CD-R/CD-RW exceeding 700 MB cannot be played.
- This unit may not be able to play certain discs made using a computer due to the application (writing software) setting used. (For details, consult the store where the application was purchased.)
- It is possible that certain text data, such as titles, recorded on a CD-R/CD-RW may not be displayed when musical data (CD-DA) is playing.
- The period from when a CD-RW is inserted to when it begins playing is longer than a normal CD or CD-R.
- Completely read the instruction manual and cautions for CD-R/CD-RWs.
- Do not use discs with cellophane tape adhering, partially peeled off labels, or adhesive material exuding from the edges of the CD label. Also, do not use discs with a commercially-available CD-R label affixed. The disc may not eject resulting in a malfunction.

▼Operating tips for MP3

NOTE

Supply of this product only conveys a license for private, non-commercial use and does not convey a license nor imply any right to use this product in any commercial (i.e. revenue-generating) real time broadcasting (terrestrial, satellite, cable and/or any other media), broadcasting/streaming via the Internet, intranets and/or other networks or in other electronic content distribution systems, such as pay-audio or audio-on-demand applications. An independent license for such use is required. For details, please visit http://www.mp3licensing.com.

- This audio system handles MP3 files that have been recorded on CD-R/CD-RW/CD-ROMs. Discs that have been recorded using the following formats can be played:
  - ISO 9660 level 1
  - ISO 9660 level 2
  - Joliet extended format
  - Romeo extended format
- This unit handles MP3 files conforming to the MP3 format containing both header frames and data frames.
- This unit can play multi-session recorded discs that have up to 40 sessions.
- This unit can play MP3s with sampling frequencies of 8/11.025/12/16/22.05/24/32/44.1/48 kHz.
- This unit can play MP3 files that have been recorded in bit rates of 8 kbps to 320 kbps. Nonetheless, to insure enjoyment of music with consistent sound quality, it is recommended to use discs that have been recorded at a bit rate of 128 kbps or more.
- If a disc has both music data (CD-DA) and MP3 files, playback of the two file types differs depending on how the disc was recorded.
- Packet written discs cannot be played on this unit.
- This unit does not play CDs recorded using MP3i (MP3 interactive), MP3 PRO and RIFF MP3 formats.

About folders and files

- The arrangement and playing order of a recorded disc containing MP3 files is as follows:

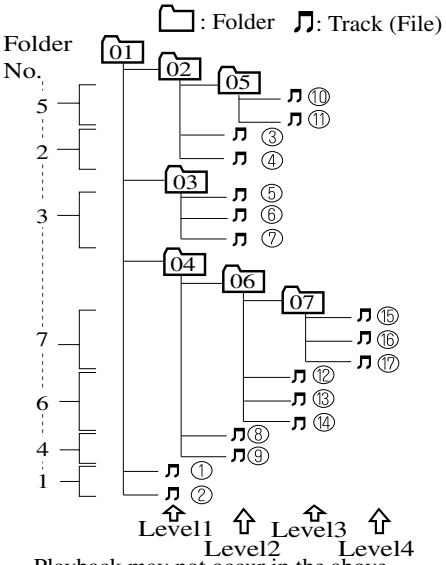

Playback may not occur in the above hierarchy depending on the audio unit.

- The folder order is automatically assigned and this order cannot be optionally set.
- Any folder without an MP3 file will be ignored. (It will be skipped and the folder number will not be displayed.)

- MP3 files not conforming to the MP3 format containing both header frames and data frames will be skipped and not played.
- This unit will play MP3 files that have up to eight levels. However, the more levels a disc has, the longer it will take to initially start playing. It is recommended to record discs with two levels or less.
- A single disc with up to 512 files can be played and a single folder with up to 255 files can be played.
- When naming an MP3 file, be sure to add an MP3 file extension (.mp3) after the file name.
- The number of characters which can be displayed is restricted.

⚠ CAUTION

This unit can only play MP3 files that have an MP3 file extension (.mp3) attached. Do not attach an MP3 file extension to any other type file as it could cause noise to be emitted or a malfunction in the unit.

About ID3 Tag display

- This unit can only display ID3 Tag album, track and artist names that have been input using Ver.1.0/1.1/2.2/2.3/2.4 formats. Any other data that may have been input cannot be displayed.
- This unit cannot display some characters. Characters which cannot be displayed are indicated by an asterisk (✱).

Specialized glossary

MP3

Abbreviation for “MPEG Audio Layer 3”. A technical standard for audio compression as decided by the ISO*1 MPEG working group. Use of MP3 allows for audio data to be compressed to approximately a tenth of the source data size.

*1 International Organization for Standardization

ISO 9660

An international standard for logical formatting of CD-ROM files and folders. It is divided into three separate levels based on differences in file naming procedures, data configuration and other characteristics.

Multi-session

A session is the complete amount of data recorded from the beginning to the end of a single period of CD-ROM, CD-R/CD-RW data recording. Multi-session refers to the existence of data from two or more sessions on a single disc.

Sampling

Refers to the process of encoding analog audio data at regular intervals and converting it to digital data. The sampling rate refers to the number of times a sample is taken in one second and is expressed in Hz units. Increasing the sampling rate improves the sound quality but also increases the data size.

Bit rate

Refers to the volume of data per second, expressed in bps (bits per second). Generally, the larger the number of the transfer bit rate when compressing an MP3 file, the more information regarding musical reproduction it carries, and therefore the better the sound quality.

Packet writing

A general term for the method, similar to that used for floppy discs or hard drives, of recording the required file in a single increment on a CD-R and similar.

ID3 Tag

ID3 tag is a method for storing information related to the music in an MP3 file. Information such as track, artist and album name can be stored. This content can be freely edited using ID3 editing function software.

VBR

Abbreviation for Variable Bit Rate. While CBR (Constant Bit Rate) is generally used, VBR varies the bit rate for audio compression according to compression conditions and this allows for compression with preference given to sound quality.

▼Operating Tips for WMA

WMA is short for Windows Media Audio and is the audio compression format used by Microsoft.
Audio data can be created and stored at a higher compression ratio than MP3.

* Microsoft and Windows Media are registered trademarks of Microsoft Corporation U.S. in the United States and other countries.

Playable WMA files are as follows:

Item	Content
Specification	Windows Media Audio Version 7.0, 8.0, 9.0
Sampling rate	22.05 kHz (MID) 44.1/48/32 kHz (HI)
Bit rate	32—192 kbps (Version 7.0, 8.0) 32—320 kbps (Version 9.0)

⚠ CAUTION

This unit plays files with the (.wma) file extension as a WMA file. Do not use the WMA file extension for files other than WMA files. Otherwise, it could result in noise or a malfunction.

- Track, artist and album name information is recorded as data termed “WMA-Tag”, and this information is displayable.
- WMA files written under specifications other than the indicated specification may not play normally or files or folder names may not display correctly.
- The file extension may not be provided depending on the computer operating system, version, software, or settings. In this case, add the file extension “.wma” to the end of the file name, and then write it to the disc.

▼Operating Tips for AAC

Advanced Audio Coding (AAC) is standardized voice compression established by the ISO[*1] working group (MPEG). Audio data can be created and stored at a higher compression ratio than MP3.

*1 International Organization for Standardization

Playable AAC file specifications

This unit supports playback of AAC files recorded in CD-R and CD-RW.

Playable AAC files are as follows:

Item	Content
Specification	MPEG-4 AAC-LC
Sampling rate	8/11.025/12 kHz 16/22.05/24 kHz 32/44.1/48 kHz
Bit rate	24—320 kbps

⚠ CAUTION

This unit plays files with the file extension (.aac/.m4a) as an AAC file. Do not use the AAC file extension for files other than AAC files. Otherwise, it could result in noise or a malfunction.

- Song, artist, and album name information in the AAC file is recorded as data termed "iTunes, m4a, Meta-Data applicable", and this information is displayable.
- AAC files written under specifications other than the indicated specification may not play normally or files or folder names may not display correctly.
- The file extension may not be provided depending on the computer operating system, version, software, or settings. In this case, add the file extension ".aac/.m4a" to the end of the file name, then write it to the disc.

▼Operating Tips for USB device

This unit supports playback of MP3/WMA/AAC files recorded to USB device.

NOTE

- *Music data (MP3/WMA/AAC (.aac/.m4a) format) stored in a USB mass-storage class compliant device (such as USB flash memory) can be played.*
- *Playback may not be possible depending on the type and condition of the USB flash memory even if the audio file complies with the standard above.*
- *A copyright protected WMA/AAC file cannot be played in this unit.*
- *The order of the music data stored in the device may differ from the playback order.*
- *To prevent loss or damage of stored data, we recommend that you always back up your data.*
- *If a device exceeds the maximum electric current value of 500 mA, it may not operate or recharge when connected.*
- *Do not pull out the USB device while in the USB mode (only pull it out while in FM/AM radio or CD mode).*
- *The device will not operate if the data is password protected.*

Playable MP3 file specifications

Playable MP3 files are as follows:

Item	Content
Specification	MPEG1 AUDIO LAYER III MPEG2 AUDIO LAYER III MPEG2.5
Sampling rate	44.1/48/32 kHz (MPEG1) 22.05/24/16 kHz (MPEG2) 11.025/12/8 kHz (MPEG2.5)
Bit rate	32—320 kbps (MPEG1) 32—160 kbps (MPEG2) 32—160 kbps (MPEG2.5)

⚠ CAUTION

This unit plays files with the file extension (mp3) as an MP3 file. Do not use the MP3 file extension for files other than MP3 files. Otherwise, it could result in noise or a malfunction.

- MP3 files written under specifications other than the indicated specification may not play normally or files or folder names may not display correctly.
- The file extension may not be provided depending on the computer operating system, version, software, or settings. In this case, add the file extension ".mp3" to the end of the file name, and then write it to the memory.

Playable WMA file specification

Playable WMA files are as follows:

Item	Content
Specification	Windows Media Audio Version 7.0, 8.0, 9.0 (standard)
Sampling rate	22.05 kHz (MID) 44.1/48/32 kHz (HI)
Bit rate	32—192 kbps (Version 7.0, 8.0) 32—320 kbps (Version 9.0)

⚠ CAUTION

This unit plays files with the file extension (wma) as a WMA file. Do not use the WMA file extension for files other than WMA files. Otherwise, it could result in noise or a malfunction.

- WMA files written under specifications other than the indicated specification may not play normally or files or folder names may not display correctly.
- The file extension may not be provided depending on the computer operating system, version, software, or settings. In this case, add the file extension ".wma" to the end of the file name, and then write it to the memory.

Playable AAC file specification

Playable AAC files are as follows:

Item	Content
Specification	MPEG4 AAC-LC
Sampling rate	8/11.025/12 kHz 16/22.05/24 kHz 32/44.1/48 kHz
Bit rate	24—320 kbps

⚠ CAUTION

This unit plays files with the file extension (.aac/.m4a) as an AAC file. Do not use the AAC file extension for files other than AAC files. Otherwise, it could result in noise or a malfunction.

- AAC files written under specifications other than the indicated specification may not play normally or files or folder names may not display correctly.
- The file extension may not be provided depending on the computer operating system, version, software, or settings. In this case, add the file extension ".aac" or ".m4a" to the end of the file name, and then write it to the memory.

▼Operating Tips for iPod

This unit supports playback of music files recorded to an iPod.

- iPod is a trademark of Apple Inc., registered in the U.S. and other countries.

- iPod classic is a trademark of Apple Inc., registered in the U.S. and other countries.
- iPod nano is a trademark of Apple Inc., registered in the U.S. and other countries.
- iPod touch is a trademark of Apple Inc., registered in the U.S. and other countries.
- iPhone is a trademark of Apple Inc., registered in the U.S. and other countries.

Connectable iPods are as follows:
- iPod: 5G
- iPod classic
- iPod nano: 1/2/3/4/5/6G
- iPod touch*1
- iPhone*1: 3G/3GS/4

*1 Only iPod functions

CAUTION

- *Remove the iPod when it is not in use. Because the iPod is not designed to withstand excessive changes in temperature inside the cabin, it could be damaged or the battery may deteriorate due to the excessive temperature or humidity inside the cabin if it is left in the vehicle.*
- *If data in the iPod is lost while it is connected to the unit, Mazda cannot guarantee recovery of any lost data.*
- *If the iPod battery is deteriorated, the iPod may not recharge and playback may not be possible when it is connected to the unit. Replace the iPod battery immediately.*
- *For the details on using the iPod, refer to the iPod instruction manual.*
- *When connecting the iPod to a USB port, all commands are made from the audio unit. iPod control is not possible.*

NOTE
The audio unit cannot display images or videos stored in an iPod.

Audio Set

Audio information is displayed on the information display.

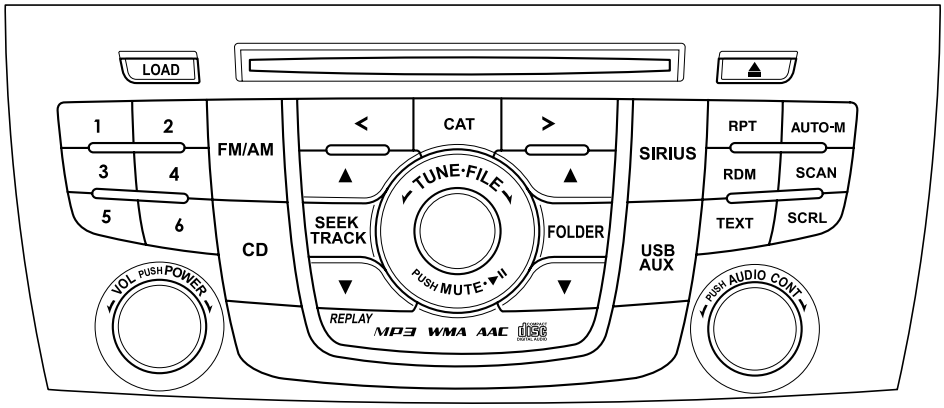

Power/Volume/Sound Controls ..... page 6-24
Operating the Radio ..... page 6-28
Operating the Satellite Radio ..... page 6-30
Operating the Compact Disc (CD) Player ..... page 6-42
Operating the Auxiliary jack/USB port ..... page 6-45
Error Indications ..... page 6-46

Audio System

▼Power/Volume/Sound Controls

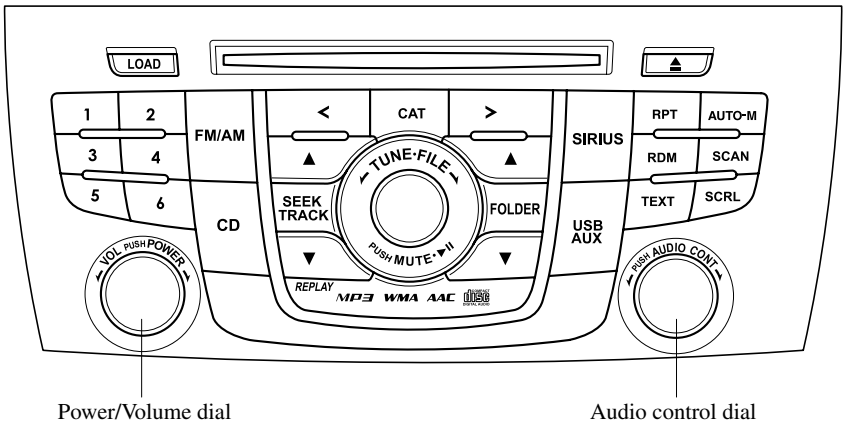

Power ON/OFF

Switch the ignition to ACC or ON.

Press the power/volume dial to turn the audio system on.
Press the power/volume dial again to turn the audio system off.

NOTE
To prevent the battery from being discharged, do not leave the audio system on for a long period of time when the engine is not running.

Volume adjustment

To adjust the volume, turn the power/volume dial.

Turn the power/volume dial to the right to increase volume, to the left to decrease it.

Audio sound adjustment

1. Press the audio control dial to select the function. The selected function will be indicated.

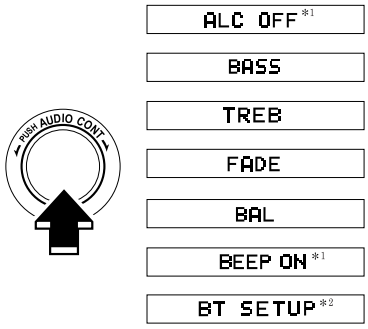

*1 Depending on the mode selected, the indication changes.
*2 Depending on the model, this function, may not be available.

2. Turn the audio control dial to adjust the selected functions as follows:

Indication	Turn Left	Turn Right
ALC	Select mode	
BASS	Decrease bass	Increase bass
TREB	Decrease treble	Increase treble
FADE	Shift the sound to the front	Shift the sound to the rear
BAL	Shift the sound to the left	Shift the sound to the right
BEEP	off	on
BT SETUP	Select mode	

NOTE

- *Depending on the type of audio unit, the order in which the functions appear differs.*
- *About 5 seconds after selecting any mode, the volume function will be automatically selected. To reset bass, treble, fade, and balance, press the audio control dial for 2 seconds. The unit will beep and "CLEAR" will be displayed.*

Automatic Level Control (ALC)

The automatic level control (ALC) is a feature that automatically adjusts audio volume and sound quality according to the vehicle speed.
The volume increases in accordance with the increase in vehicle speed, and decreases as vehicle speed decreases.

Select the desired ALC mode.

Mode	Volume change
ALC OFF	No change
ALC LEVEL1	Minimum
ALC LEVEL2	⬇ ⇧
ALC LEVEL3	⬇ ⇧
ALC LEVEL4	Medium
ALC LEVEL5	⬇ ⇧
ALC LEVEL6	⬇ ⇧
ALC LEVEL7	Maximum

Turn the audio control dial to select ALC OFF or ALC LEVEL1—7 modes. The selected mode will be indicated.

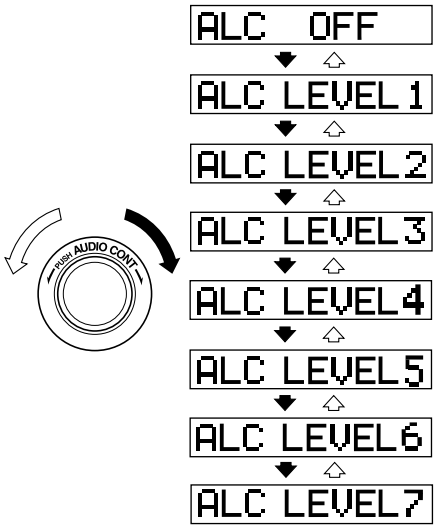

BEEP setting

The beep-sound when operating the audio system can be set on or off.

BT SETUP mode ✶

Music and other audio such as voice data recorded on portable audio devices and mobile phones available on the market which are equipped with the Bluetooth® transmission function can be listened to via wireless transmission over the vehicle's speakers. Using the BT SETUP mode, these devices can be programmed to the Bluetooth® unit or changed.
Refer to Bluetooth® Audio on page 6-60.

 ✶Some models.

MEMO

Audio System

▼Operating the Radio

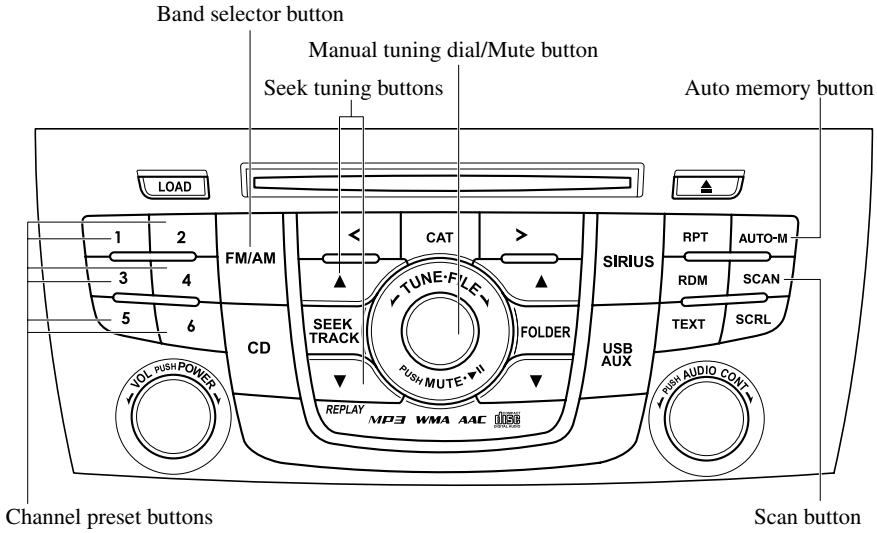

Radio ON

Press a band selector button (**FM/AM**) to turn the radio on.

Band selection

Successively pressing the band selector button (**FM/AM**) switches the bands as follows: FM1→FM2→AM.

The selected mode will be indicated. If FM stereo is being received, “ST” will be displayed.

NOTE

If the FM broadcast signal becomes weak, reception automatically changes from STEREO to MONO for reduced noise, and the “ST” indicator will go out.

Tuning

The radio has the following tuning methods: Manual, Seek, Scan, Preset channel, and Auto memory tuning. The easiest way to tune stations is to set them on preset channels.

Manual tuning

Turning the manual tuning dial will change the frequency higher or lower.

Seek tuning

Pressing the seek tuning button (▲ , ▼) will cause the tuner to seek a higher or lower frequency automatically.

NOTE

If you continue to press and hold the button, the frequency will continue changing without stopping.

Scan tuning

Press the scan button (SCAN) to automatically sample strong stations. Scanning stops at each station for about 5 seconds. To hold a station, press the scan button (SCAN) again during this interval.

Preset channel tuning

The 6 preset channels can be used to store 6 AM and 12 FM stations.

1. To set a channel first select AM, FM1, or FM2. Tune to the desired station.
2. Depress a channel preset button for about 2 seconds until a beep sound is heard. The preset channel number and station frequency will be displayed. The station is now held in the memory.
3. Repeat this operation for the other stations and bands you want to store. To tune one in the memory, select AM, FM1, or FM2 and then press its channel preset button. The station frequency and the channel number will be displayed.

Auto memory tuning

This is especially useful when driving in an area where the local stations are not known. Additional AM/FM stations can be stored without disturbing the previously set channels.

Press and hold the auto memory button (AUTO-M) for about 2 seconds until a beep sound is heard; the system will automatically scan and temporarily store up to 6 stations with the strongest frequencies in each selected band in that area.

After scanning is completed, the station with the strongest frequency will be tuned and its frequency displayed.
Press and release the auto memory button (AUTO-M) to recall stations from the auto-stored stations. One stored station will be selected each time; its frequency and channel number will be displayed.

NOTE
If no stations can be tuned after scanning operations, “A” will be displayed.

Mute

Press the mute button (MUTE) once to mute the audio. Press it again to resume audio output.

▼Operating the Satellite Radio*

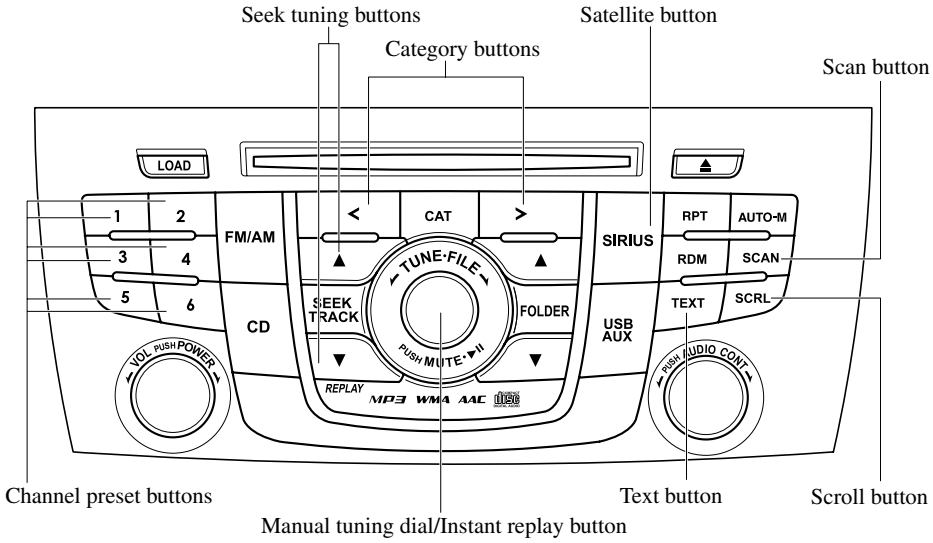

Information display

All operations of the satellite radio are displayed on the Information display.

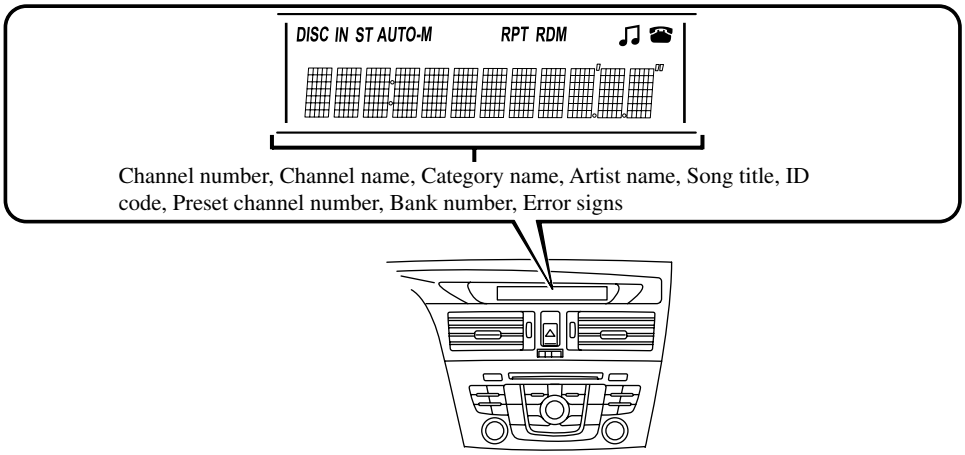

*Some models.

NOTE
This equipment has been tested and found to comply with the limits for a Class B digital device, pursuant to Part 15 of the FCC Rules. These limits are designed to provide reasonable protection against harmful interference in a residential installation. This equipment generates, uses, and can radiate radio frequency energy and if not installed and used in accordance with the instructions, may cause harmful interference to radio communications. However, there is no guarantee that interference will not occur in a particular installation. If this equipment does cause harmful interference to radio or television reception, which can be determined by turning the equipment off and on, the user is encouraged to try to correct the interference by one or more of the following measures:
- Increase the separation between the equipment and tuner.
- Connect the equipment into an outlet on a circuit different from that to which the tuner is connected.
- Consult the dealer or an experienced radio/TV technician for help.

What is satellite radio?

With over 130 channels, SIRIUS Satellite Radio brings you more of what you love. Get 69 channels of 100 % commercial-free music, plus all your favorite sports, news, talk and entertainment. Everything worth listening to is now on SIRIUS.
100 % Commercial-free Music—With music from every genre, artist-dedicated channels, live performances and more, SIRIUS is the home of 100 % commercial-free music.
Live Sports Play-by-Play & Expert Talk—Hear every NFL game, every NASCAR® race and college sports coverage from over 150 schools. Plus 24/7 sports talk with channels like SIRIUS NFL Radio, SIRIUS NASCAR Radio and more.
Exclusive Entertainment and Talk—The biggest names, compelling talk, hilarious comedy. Hear Howard Stern, Martha Stewart, Jamie Foxx, Blue Collar Comedy, Playboy Radio, political talk and more.
World-class News—Stay informed with FOX, CNN, CNBC, NPR®, BBC and more.
Plus local traffic and weather.
Family & Kids—Entertain the entire family with Radio Disney, Kids Place Live, Laugh USA and more.

Sign up for SIRIUS Radio today! For more information, visit www.siriusxm.com.
Satellite radio is only available in regions providing satellite radio service (some areas of the United States and Canada).

How to Activate Satellite Radio

You must call SIRIUS to activate your service. Activation is free and takes only a few minutes.

SIRIUS service uses an ID code to identify your radio. This code is needed to activate SIRIUS service, and report any problems.

To activate you SIRIUS radio tuner, call a SIRIUS customer service specialist at 1-888-539-7474 or you can visit SIRIUS online at www.siriusxm.com.

Please have the following information ready:
- SIRIUS ID (12-digit electronic serial no., or ESN*)
- Valid credit card information (may not be required at initial sign-up)

*ESN: Electronic Serial Number

Displaying the SIRIUS ID (ESN)

When the manual tuning dial is turned to channel 0, a 12-digit Electronic Serial Number (ESN) for the SIRIUS tuner is displayed.

(If the SIRIUS ID (ESN) for the tuner does not display)
If “ESN FAIL” is displayed after channel 0 is selected by operating the manual tuning dial, contact an Authorized Mazda Dealer.

Be sure you are parked outside with a clear view of open sky, you will be instructed to turn on your radio (in SAT mode and tuned to channel 184). Activation typically takes only 2—5 minutes.

SIRIUS operation

All operations of the satellite radio are conducted by means of the audio unit.

SIRIUS radio mode selection

When the satellite button (SIRIUS) is pressed during ACC ON, it will play the last SIRIUS channel in use before the mode was switched over to another mode or the power was turned off.
When the satellite button (SIRIUS) is pressed in a mode other than the SIRIUS mode, the last channel in use will be received.
Every time the satellite button (SIRIUS) is pressed, the bank changes in the order shown below.

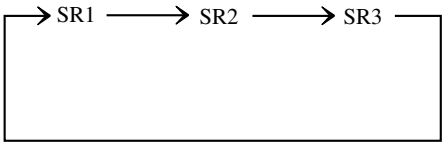

NOTE
SR1, SR2 and SR3: six stations can be stored in each bank for convenient access to your favorite stations.

Operation in the initial state

It may take some time to start up the equipment when it is in the initial state, when there is a change in the user's subscription condition, or when the SIRIUS channel map is changed.

“UPDATING xx%” is displayed when the SIRIUS channel map is changed. If the unit is initialized or the user contract content is changed, “SUBSCRIPTION” and “UPDATED” is displayed. Updating could take as long as three minutes depending on the geographical area. When the unit is in an initialized state, channel 184 is displayed after the display indicates “UPDATING 100%”. If the SIRIUS channel map or the user contract content is changed, the channel prior to the change is displayed after “SUBSCRIPTION” and “UPDATED” is displayed. After the initialization display, it may take as long as 12 seconds to receive channel 184.

NOTE
Do not perform the following operation while “UPDATING” is displayed. Otherwise, the updating procedure will be cancelled.
- *Turning off the audio power*
- *Switching to other modes*
- *Switching the ignition off*

When the SIRIUS mode is switched to another mode, or when the power is turned off, the present channel which is being received is stored as the last channel.

Channel selection

Turning the manual tuning dial allows you to select the desired receiving channel.
- Turn the knob clockwise: Channel Up
- Turn the knob counterclockwise: Channel Down

Unsubscribed channel

When a selected station has not been subscribed to, the display indicates the following:
After the channel number is displayed, [CALL + 888] and [539 + SIRI] (Flashes alternately) is displayed.

NOTE
When the subscription contract is canceled, all of the channels including channel 184 appear as unsubscribed.

Invalid channel

The display switches between [SR + (bank number)+ INVALID] and [SR + (bank number)+ CHANNEL] only when a selected channel is not broadcasting.

NOTE
If the last channel selected has become unavailable because of a channel update the above indication is displayed until any button is pressed.

Preset channel programming

(Programming with “channel number” display)

1. Select the desired channel to be programmed. At this point, the following is displayed:
   [SR + (bank number)+ (channel number)]
2. Keep pressing the channel preset button for 1.5 seconds or more.
   The programming process is complete after the channel number flashes. Then, [SR + (bank number)] is displayed and a beep sound is heard at the same time.
3. [SR + (bank number)+ CH + (preset number)+ (channel number)] are displayed.

(Programming with “text” display (e.g. channel name))

1. Select the desired channel to be programmed. At this point, the following is displayed:
   [SR + (bank number)+ (selected text (e.g. channel name))]
2. Keep pressing the channel preset button for 1.5 seconds or more.
   The programming process is complete after the text (e.g. channel name) flashes. Then, [SR + (bank number)] is displayed and you will hear beep sound at the same time.
3. [SR + (bank number)+ CH + (preset number)+ (channel number)] are displayed.
4. Three seconds later, it returns to normal display. [SR + (bank number)+ (text (e.g. channel name))]

NOTE
Six stations can be stored in each bank, SR1, SR2, and SR3 for convenient access to your favorite stations.

Preset channel call-up

Press and release the channel preset button,
[SR + (bank number)+ CH + (preset number)+ (channel number)] appears.
When the preset button is pressed during text mode, its channel number is displayed first for three second and then its text is displayed.

NOTE
In the initial setting, all channels are preset to 184.

Category change

Press the category button (> or <) and select the desired category.
- Press the category button (>): Category up
- Press the category button (<): Category down

Every time the category button (>) is pressed, the category is changed over in the order shown below.
At this time, the lowest (smallest-number) channel within the category indicated is received.
When the highest (or lowest) category is reached, the category is changed over in the order shown below.
Highest category → All categories → Lowest category

NOTE
While all categories are selected, all channels covering a category can be accessed (Category off condition).

Channel selection within a category

If you are in a selected category and the channel number is displayed, turning the manual tuning dial moves the channel number up/down in that category.
- Turn the manual tuning dial clockwise: Channel Up
- Turn the manual tuning dial counterclockwise: Channel Down

NOTE
The channel number needs to be indicated in the display to use manual tuning dial for this function.

Scan tuning

Press the scan button (SCAN) to automatically sample stations. Scanning stops at each station for about five seconds. To hold a station, press the scan button (SCAN) again during this interval.

NOTE

- *Unsubscribed channels, invalid channels, parental lock channels and channel 0 are not subject to the scan, therefore these channels will be skipped automatically.*
- *You can scan all channels while all categories are selected. If you are in a selected category, you can only scan the channels in that category.*

Channel number, channel name, category, artist, song titles and info display

Each time the text button (TEXT) is pressed during SIRIUS reception, the display of the text data is changed over in the order shown below.

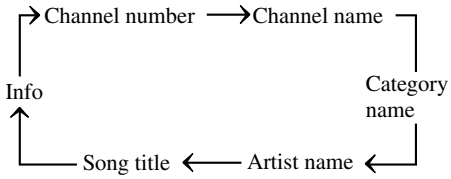

NOTE

- *Eight characters are displayed on one screen.*
- *To display the rest of the characters of a long title, press the scroll button (SCRL). The display scrolls the next eight characters. Press the scroll button (SCRL) again after the last eight characters have been displayed to return to the beginning of the title.*

(Channel number display)

- When the text button (TEXT) is pressed while in info display mode, the mode changes to the channel number display mode.

(Channel name display)

- When the text button (TEXT) is pressed while in channel number display mode, it changes to channel name display mode.
- There are short (eight fixed characters) and long names for the channel name.
- The long name is displayed first, and three seconds later the short name is displayed. If there is no short name, the long name is displayed.
- To display the rest of the characters of the channel name, press the scroll button (SCRL). The display scrolls the next eight characters. Press the scroll button (SCRL) again after the last eight characters have been displayed to return to the beginning of the title.
- Press the scroll button (SCRL) while the short name is displayed to switch the display to the long name.
- Three seconds after scrolling the long name, the display automatically returns to the first part of the long name. Three more seconds and the short name appears.

- If there is no channel name, “No TITLE” is displayed.

(Category name display)
- When the text button (TEXT) is pressed while in channel name display mode, it changes to the category name display mode.
- There are short (eight fixed characters) and long names for the category name.
- The long name is displayed first, and three seconds later the short name is displayed. If there is no short name, the long name is displayed.
- To display the rest of the characters of the category name, press the scroll button (SCRL). The display scrolls the next eight characters. Press the scroll button (SCRL) again after the last eight characters have been displayed to return to the beginning of the title.
- Press the scroll button (SCRL) while the short name is displayed to switch the display to the long name.
- Three seconds after scrolling the long name, the display automatically returns to display the first part of the long name. Three more seconds and the short name appears.
- If there is no category name, “No CATEGORY” is displayed.

(Artist name display)
- When the text button (TEXT) is pressed while in category name display mode, it changes to the artist name display mode.
- To display the rest of the characters of the artist's name, press the scroll button (SCRL). The display scrolls the next eight characters. Press the scroll button (SCRL) again after the last eight characters have been displayed to return to the beginning of the title.
- Three seconds after scrolling the artist name, the display automatically return to display the first part of the artist's name.
- If there is no artist's name, “No ARTIST” is displayed.

(Song title display)
- When the text button (TEXT) is pressed while in artist name display mode, it changes to the song title display mode.
- To display the rest of the characters of the song title, press the scroll button (SCRL). The display scrolls the next eight characters. Press the scroll button (SCRL) again after the last eight characters have been displayed to return to the beginning of the title.
- Three more seconds after scrolling the song title, the display automatically returns to display the first part of the song title.
- If there is no song title, “No SONG” is displayed.

(INFO (such as composer's name) display)
- When the text button (TEXT) is pressed while in song title display mode, it changes to the INFO display mode.
- To display the rest of the characters of the composer's name, press the scroll button (SCRL). The display scrolls the next eight characters. Press the scroll button (SCRL) again after the last eight characters have been displayed to return to the beginning of the title.
- Three seconds after scrolling the text, the display automatically returns to display the first part of the text.
- If there is no composer name, “No INFO” is displayed.

Instant replay

This function allows you to rewind and replay the program that you were previously or are currently listening to.
Press the instant replay button (▶II).
When the seek tuning button (▼) is pressed (about 1.5 seconds), playback starts from the beginning of the current program.
When the seek tuning button (▼) is pressed twice, playback starts from the beginning of the previous program.
When the seek tuning button (▼) is pressed for about 1.5 seconds or longer, the program is reversed while the button is being pressed.
When the seek tuning button (▲) is pressed (about 1.5 seconds), playback starts from the beginning of the next program. When the seek tuning button (▲) is pressed (about 1.5 seconds) while the last program is being played, the instant replay mode is cancelled.
When the seek tuning button (▲) is pressed for 1.5 seconds or longer, the program is fast-forwarded while the button is being pressed. When pressing and holding the button until the end of the program, the instant replay mode is cancelled.
When the instant replay button (▶II) is pressed again, playback is paused, or playback starts if it has been paused.
Instant replay (PAUSE)
If the instant replay button (▶II) is pressed while the instant replay mode is off, instant replay mode is turned on in a paused condition (PAUSE). Press the instant replay button (▶II) again to resume playback from the point at which it was paused.

NOTE

- *If the channel is changed, the instant replay buffer data is deleted.*
- *After turning on the power and switching to SIRIUS digital satellite radio mode, the instant replay mode is not available for several seconds after changing channels.*

Initialization of ID code

If the registered ID code is forgotten, return the ID code to the default [0000] by performing the following steps:
Setting condition: SAT mode

(Master code input preparation)

1. Press and hold the scan button (SCAN), then press channel preset button 4. Hold both buttons together for 1.5 seconds.
2. “ENTER PIN” appears for three seconds which indicates that it is in code input mode.
3. “SR1 - - - -” appears, which indicates that it is ready for code input.

(Master code input)

4. Input the master code using the channel preset buttons 1-4.
   (The master code is already set at the time of factory shipment.)

(Master code input determination)

5. Determine the master code which has been input by pressing the scan button (SCAN).
6. “PIN CLEARED” appears which indicates that the master code input has been completed.
7. The ID code is set to the default [0000] and the initialization process is completed.

NOTE
Master code:
The Master Code is used to initialize or re-initialize the ID code in the event that the code is not set to [0000] and/or the personalized ID code is not known. The initialization process resets the ID code to [0000]. The master code can potentially defeat the intent of the security of the parental lock if it is located by persons not authorized by the owner to access certain channels.

SIRIUS Satellite Radio Master Code: [0913]

NOTE
- *When a numeric value other than the master code is input and the scan button (SCAN) is pressed, "SR1 Err" is displayed and then it returns to the "SR1 - - - -" display again.*
- *If an ID code is not input for ten seconds, "Err" is displayed and it returns to the former display.*
- *Channel preset buttons 1, 2, 3, 4 and the scan button (SCAN) are used for inputting the ID code. Buttons 5 and 6 cannot be used.*

Change of ID code

Setting condition: SAT mode
When changing the ID code, the new ID code is input after the previous one is input first.

(Registered ID code input)

1. Press and hold the scan button (SCAN), then press channel preset button 5. Hold both buttons together for 1.5 seconds.
2. "ENTER PIN" appears for three seconds which indicates that it is in code input mode.
3. "SR1 - - - -" appears, which indicates that it is ready for code input.
4. Input the registered ID code using channel preset buttons 1-4.
   Example: When the registered ID code is "2323", input "2323". At this time "SR1 2323" is displayed.
   Press 1 for the first digit, 2 for the second, 3 for the third, and 4 for the last digit. For example, if your number is 2323, press 1 three times (includes 0), 2 four times, 3 three times, and 4 four times. If the display goes off while inputting, begin from Step 1.

NOTE
The registered ID code is the default [0000] at the time of factory shipment. If [0000] results in "Err" on the display, go to the "INITIALIZATION OF ID CODE" section to reset to [0000].

(Verification with the registered ID code)

5. Determine the input code by pressing the scan button (SCAN).
6. If it does not match with the previously registered code, "SR1 Err" is displayed and then it returns to "SR1 - - - -".
7. If it matches with the previously registered code, "ENTER PIN" appears again and it switches to code input mode.
8. "SR1 - - - -" appears, and it is ready for input of the new ID code.

(New ID code input)

9. Input the new ID code using channel preset buttons 1-4.
   Example: If "1234" is input as the new code, "SR1 1234" is displayed.

(New ID code input determination)

10. Determine the new ID code which has been input by pressing the scan button (SCAN).
11. “PIN CHANGED” appears for three seconds which indicates that the new ID code input has been completed.
12. It returns to the former display.

NOTE

- *If an ID code is not input for ten seconds, “Err” is displayed and it returns to the former display.*
- *Channel preset buttons 1, 2, 3, 4 and the scan button (SCAN) are used for input of the ID code. Buttons 5 and 6 cannot be used.*

Individual channel locking

If a channel is locked, the channel is muted.

NOTE

If the registered ID code is forgotten, return the ID code to the default [0000]. (See “INTIALIZATION OF ID CODE” section)

(Locking a channel)

1. Select a channel to be locked by turning the manual tuning dial. Example: Select channel 100

(Registered ID code input preparation)

2. Press and hold the scan button (SCAN), then press channel preset button 6. Hold both buttons together for 1.5 seconds.
3. “ENTER PIN” appears for three seconds which indicates that it is in code input mode.
4. “SR1 - - - -” appears which indicates that it is ready for code input.

(Registered ID code input)

5. Input the registered ID code using channel preset buttons 1-4. Example: If the registered ID code is “2323”, input “2323”. At this time “SR1 2323” is displayed.

(Registered ID code input determination)

6. Determine the code which has been input by pressing the scan button (SCAN).
7. If it does not match the registered code, “SR1 Err” is displayed and then it returns to “SR1 - - - -”.
8. If it matches the registered code, “SR1 LOCK” appears for three seconds which indicates that the code input has been completed.
9. “SR1 LOCK 100” appears which indicates that the parental lock is activated. At this time, mute is on and no sound is heard.

NOTE

- *If an ID code is not input for ten seconds, “Err” is displayed and it returns to the former display.*
- *Channel preset buttons 1, 2, 3, 4 and the scan button (SCAN) are used for input of the ID code. Buttons 5 and 6 cannot be used.*

Lock cancellation

Setting condition: SAT mode

(Releasing a locked channel)

1. Select a channel to be released by turning the manual tuning dial. Example: Select the locked channel (i.e. 100). At this time, “SR1 LOCK 100” is displayed.

(Registered ID code input preparation)

2. Press and hold the scan button (SCAN), then press channel preset button 6. Hold both buttons together for 1.5 seconds.
3. “ENTER PIN” appears for three seconds which indicates that it is in code input mode.
4. “SR1 - - - -” appears, which indicates that it is ready for code input.

(Registered ID code input)

5. Input the registered ID code using channel preset buttons 1-4. Example: When the registered ID code is “2323”, input “2323”. At this time “SR1 2323” is displayed.

NOTE
If “Err” is displayed, go to the “INITIALIZATION OF ID CODE” section to reset the ID code to [0000].

(Registered ID code input determination)

6. Determine the input code by pressing the scan button (SCAN).
7. If it does not match the registered code, “SR1 Err” is displayed and then it returns to “SR1 - - - -”.
8. If it matches the registered code, “SR1 UNLOCK” appears for three seconds which indicates that the code input has been completed.
9. “SR1 100” appears which indicates that the parental lock is off. At this time, sound is heard.

NOTE
- *If an ID code is not input for ten seconds, “Err” is displayed and it returns to the former display.*
- *Channel preset buttons 1, 2, 3, 4 and the scan button (SCAN) are used for input of the ID code. Buttons 5 and 6 cannot be used.*

MEMO

▼Operating the Compact Disc (CD) Player

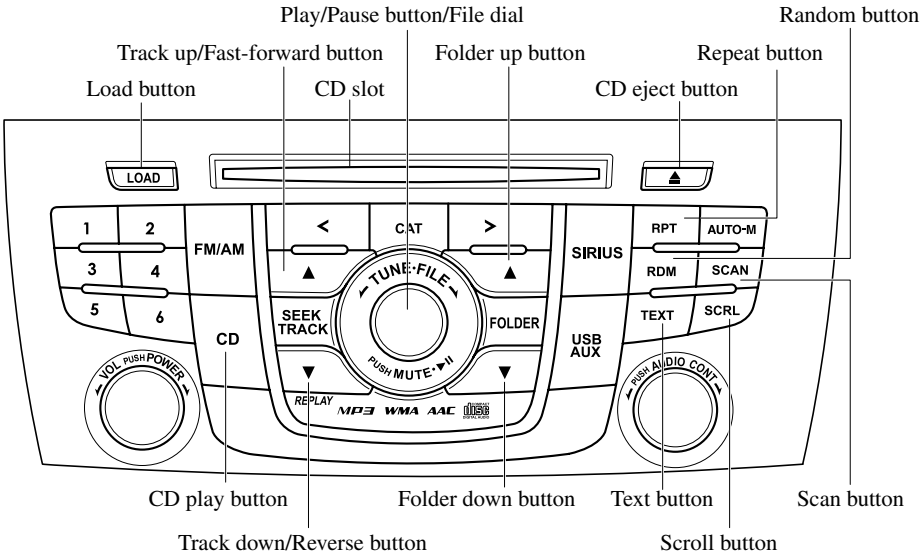

Type	Playable data
Music/MP3/WMA/AAC CD player	• Music data (CD-DA) • MP3/WMA/AAC file

NOTE
If a disc has both music data (CD-DA) and MP3/WMA/AAC files, playback of the two or three file types differs depending on how the disc was recorded.

Inserting the CD

Insert the CD into the slot, label-side up. The auto-loading mechanism will set the CD and begin play.

NOTE
There will be a short lapse before play begins while the player reads the digital signals on the CD.

Ejecting the CD

Press the CD eject button (⏏) to eject the CD.

Playback

Press the CD play button (CD) to start play when a CD is in the unit.
If a CD is not in the unit when the CD play button (CD) is pressed, “NO DISC” will flash on and off.

NOTE
When the load button (LOAD) is pressed, the CD will load and play even if the CD eject button (⏏) had been previously pressed.

Pause

To stop playback, press the Play/Pause button (▶II).
Press the button again to resume playback.

Fast-forward/Reverse

Press and hold the fast-forward button (▲) to advance through a track at high speed.
Press and hold the reverse button (▼) to reverse through a track at high speed.

Track search

Press the track up button (▲) or turn the file dial clockwise once to skip forward to the beginning of the next track.
Press the track down button (▼) or turn the file dial counterclockwise once to skip back to the beginning of the current track.

Folder search (during MP3/WMA/AAC CD playback)

To change to the previous folder, press the folder down button (▼), or press the folder up button (▲) to advance to the next folder.

Music scan

During music CD playback

This function scans the titles on a CD and plays 10 seconds of each song to aid you in finding a song you want to listen to.

During MP3/WMA/AAC CD playback

This function scans the titles in a folder currently being played and plays 10 seconds of each song to aid you in finding a song you want to listen to.

Press the scan button (SCAN) during playback to start the scan play operation (the track number will flash).
Press the scan button (SCAN) again to cancel scan playback.

NOTE
If the unit is left in scan, normal playback will resume where scan was selected.

Repeat playback

During music CD playback

1. Press the repeat button (RPT) during playback to play the current track repeatedly. “RPT” is displayed.
2. Press the button again to cancel the repeat playback.

During MP3/WMA/AAC CD playback

(Track repeat)

1. Press the repeat button (RPT) during playback to play the current track repeatedly. “TRACK RPT” is displayed.
2. To cancel the repeat playback, press the button again after 3 seconds.

(Folder repeat)

1. Press the repeat button (RPT) during playback, and then press the button again within 3 seconds to play the tracks in the current folder repeatedly. “FOLDER RPT” is displayed.
2. Press the button again to cancel the repeat playback.

Random playback

Tracks are randomly selected and played.

During music CD playback

1. Press the random button (RDM) during playback to play the tracks on the CD randomly. “RDM” is displayed.
2. Press the button again to cancel the random playback.

During MP3/WMA/AAC CD playback

(Folder random)

1. Press the random button (RDM) during playback to play the tracks in the folder randomly. “FOLDER RDM” is displayed.
2. To cancel the random playback, press the button again after 3 seconds.

(CD random)

1. Press the random button (RDM) during playback, and then press the button again within 3 seconds to play the tracks on the CD randomly. “DISC RDM” is displayed.
2. Press the button again to cancel the random playback.

Switching the display

For files with a file name and other information that have been input, the display switches between display of the file name and other information each time the text button (TEXT) is pressed during playback.

Music CD (If CD-TEXT capable)

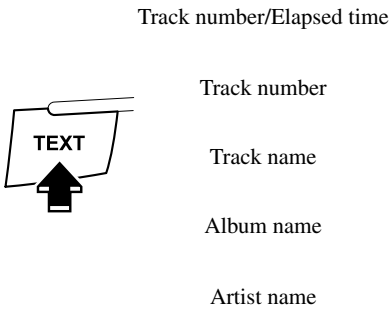

MP3/WMA/AAC CD

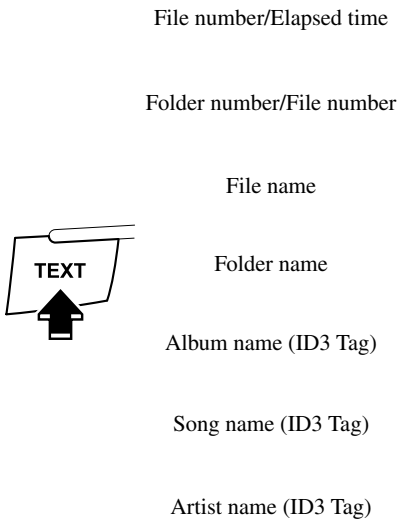

NOTE

- *The information viewable in the display is only CD information (such as artist name, song title) which has been recorded to the CD.*
- *This unit cannot display some characters. Characters which cannot be displayed are indicated by an asterisk (*).*

Display scroll

Only 12 characters can be displayed at one time.
To display the rest of the characters of a long title, press the scroll button (SCRL). The display scrolls the next 12 characters. Press the scroll button (SCRL) again after the last 12 characters have been displayed to return to the beginning of the title.

NOTE

The number of characters which can be displayed is limited.

Message display

If “CHECK CD” is displayed, it means that there is some CD malfunction. Check the CD for damage, dirt, or smudges, and then properly reinsert. If the message appears again, take the unit to an Authorized Mazda Dealer for service.

▼Operating the Auxiliary jack/ USB port

Audio can be heard from the vehicle's speakers by connecting a commercially-available portable audio unit to the auxiliary jack.
Use a commercially-available, non-impedance (3.5ϕ) stereo mini plug cable. Contact an Authorized Mazda Dealer for details.
In addition, audio can be played from the vehicle's audio unit by connecting USB device or an iPod to the USB port.
Refer to AUX/USB/iPod Mode on page 6-50.

▼Error Indications

If you see an error indication on the display, find the cause in the chart. If you cannot clear the error indication, take the vehicle to an Authorized Mazda Dealer.

Indication	Cause	Solution
ACQUIRING	Depending on the surrounding conditions (such as large trees, buildings, or tunnels) and special weather conditions, SIRIUS radio reception may be diminished or temporarily interrupted.	Improve reception by moving away from possible obstructions. If the error indication continues to display, consult an Authorized Mazda Dealer.
ANTENNA FAIL	Satellite radio antenna malfunction	Check the satellite radio antenna, antenna cable and DLP antenna connector. If the error indication continues to display, consult an Authorized Mazda Dealer.
CHECK CD	CD is inserted upside down	Insert the CD properly. If the error indication continues to display, consult an Authorized Mazda Dealer.
	CD is defective	Insert another CD properly. If the error indication continues to display, consult an Authorized Mazda Dealer.

NOTE
If a broken DLP unit is replaced with a new unit, cancel the license for the broken unit and make sure to carry out new registration for the replaced unit. If the license for the broken unit is not canceled, you will be charged a reception fee for both units.*

* DLP: Down Link Processor (SATELLITE RADIO Module)

Audio Control Switch Operation

When the audio unit is turned on, operation of the audio unit from the steering wheel is possible.

NOTE

Because the audio unit will be turned off under the following conditions, the switches will be inoperable.

- *When the ignition is switched off.*
- *When the power button on the audio unit is pressed and the audio unit is turned off.*

Without Bluetooth® Hands-Free

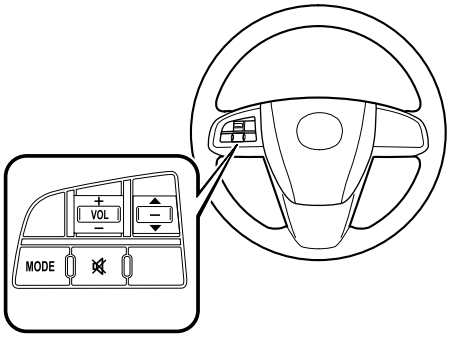

With Bluetooth® Hands-Free

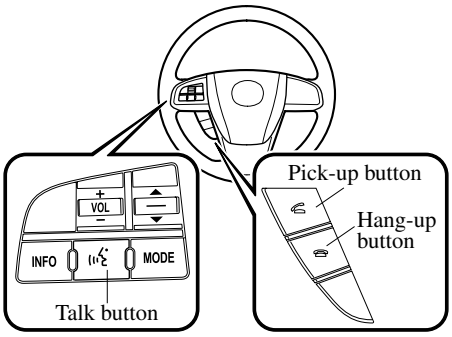

NOTE

- *The talk button, pick-up button, and hang-up button are operable with the audio unit turned off.*
- *Mazda has installed this system to prevent distraction while driving the vehicle and using audio controls on the dashboard. Always make safe driving your first priority.*

▼Adjusting the Volume

To increase the volume, press up the volume switch.

To decrease the volume, press down the volume switch.

Without Bluetooth® Hands-Free

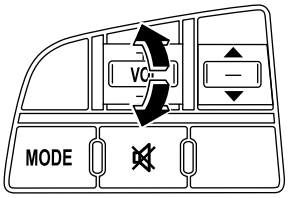

With Bluetooth® Hands-Free

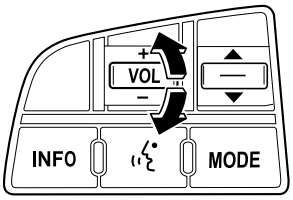

▼Changing the Source

Press the mode switch (MODE) to change the audio source (FM1 radio → FM2 radio → AM radio → CD player → SIRIUS1 → SIRIUS2 → SIRIUS3 → AUX → BT audio → USB/iPod → cyclical).

Without Bluetooth® Hands-Free

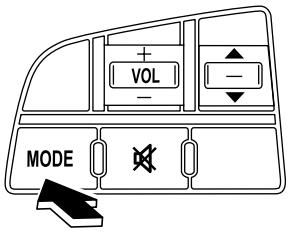

With Bluetooth® Hands-Free

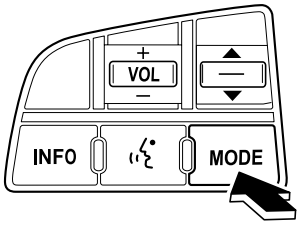

NOTE

CD, USB, iPod, SIRIUS digital satellite radio, and BT audio modes cannot be selected in the following cases:

- *USB device, iPod, SIRIUS digital satellite radio unit, or BT audio unit is not equipped on the audio system.*
- *CD has not been inserted.*

The AUX mode is unavailable unless you connect a commercially available portable audio unit (such as an MP3 player) to the auxiliary jack. Connect a portable audio unit or similar product on the market to the auxiliary jack to listen to music or audio over the vehicle's speakers. Change the audio source to AUX mode (page 6-50).

▼Seek Switch

Without Bluetooth® Hands-Free

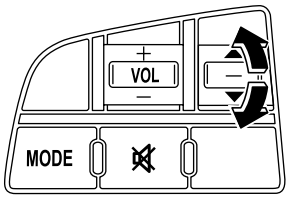

With Bluetooth® Hands-Free

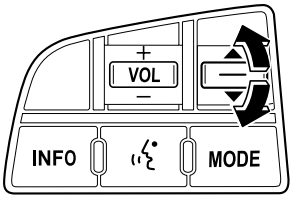

When listening to the radio or SIRIUS digital satellite radio

Press the seek switch up or down. The radio switches to the next/previous stored station in the order that it was stored (1—6).

(Radio)
Press and hold the seek switch in the up or down position to seek all usable stations at a higher or lower frequency whether programmed or not.
(SIRIUS digital satellite radio)
Press and hold the seek switch in the up or down position to seek all usable stations at a higher or lower channel whether programmed or not.

NOTE
During radio reception
Radio stations which have been previously stored in the auto memory tuning can be called up by pressing the seek switch up or down while any radio station stored in the auto memory tuning is being received. Radio stations can be called up in the order they were stored with each press of the switch up or down.

When playing a CD, USB, iPod, or BT audio

Press the seek switch up to skip to the next track.
Press the seek switch down to repeat the current track.
Press and hold the seek switch in the up or down position to continuously switch the tracks up or down.

▼Mute Switch *

Press the mute switch (🔇) once to mute audio, press it again to resume audio output.

NOTE
If the ignition is switched off with the audio muted, the mute will be canceled.
Therefore, when the engine is restarted, the audio is not muted. To mute the audio again, press the mute switch (🔇).

Without Bluetooth® Hands-Free

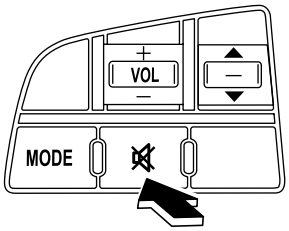

*Some models.

AUX/USB/iPod Mode

Audio can be heard from the vehicle's speakers by connecting a commercially-available portable audio unit to the auxiliary jack.
A commercially-available, non-impedance (3.5ϕ) stereo mini plug cable is required. Contact an Authorized Mazda Dealer for details.
In addition, audio can be played from the vehicle audio device by connecting USB device or an iPod to the USB port.
To use the auxiliary jack/USB port, pull up its cover.

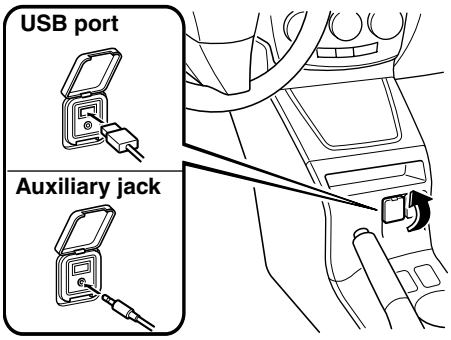

① How to use AUX mode ..... page 6-51
② How to use USB mode ..... page 6-52
③ How to use iPod mode ..... page 6-56
④ Error Indications ..... page 6-58

WARNING

Do not adjust the portable audio unit or a similar product while driving the vehicle:

Adjusting the portable audio unit or a similar product while driving the vehicle is dangerous as it could distract your attention from the vehicle operation which could lead to a serious accident. Always adjust the portable audio unit or a similar product while the vehicle is stopped.

Do not allow the connection plug cord to get tangled with the parking brake or the shift lever:

Allowing the plug cord to become tangled with the parking brake or the shift lever is dangerous as it could interfere with driving, resulting in an accident.

CAUTION

- *Always close the auxiliary jack/USB port lid when it is not in use. If foreign matter or liquid penetrate the auxiliary jack/USB port, it may cause a malfunction.*
- *Depending on the portable audio device, noise may occur when the device is connected to the vehicle accessory socket. (If noise occurs, do not use the accessory socket.)*
- *Do not place objects or apply force to the auxiliary jack with the plug connected.*

NOTE

- *This mode may not be usable depending on the portable audio device to be connected.*
- *Before using the auxiliary jack/USB port, refer to the instruction manual for the portable audio device.*
- *Use a commercially-available, non-impedance (3.5ϕ) stereo mini plug for connecting the portable audio unit to the auxiliary jack. Before using the auxiliary jack, read the manufacturer's instructions for connecting a portable audio unit to the auxiliary jack.*
- *To prevent discharging of the battery, do not use the auxiliary input for long periods with the engine off or idling.*
- *When connecting a device to the auxiliary jack or USB port, noise may occur depending on the connected device. If the device is connected to the vehicle's accessory socket, the noise can be reduced by unplugging it from the accessory socket.*
- *Insert the plug to the auxiliary jack/USB port securely.*
- *Insert or pull out the plug with the plug perpendicular to the auxiliary jack/USB port hole.*
- *Insert or remove the plug by holding its base.*

▼How to use AUX mode

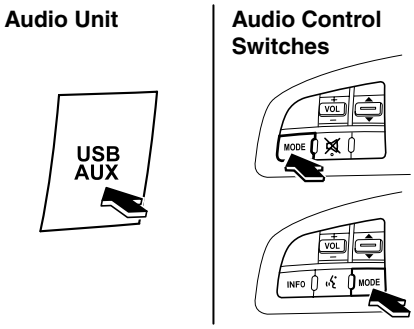

1. Switch the ignition to ACC or ON.
2. Press the power/volume dial to turn the audio system on.
3. Press the source change button (USB AUX) of the audio unit or the mode switch (MODE) of the audio control switches on the steering wheel to change to the AUX mode.

NOTE

- *When the device is not connected to the auxiliary jack, the mode does not switch to the AUX mode.*
- *Set the volume of the portable audio unit to the maximum within the range that the sound does not become distorted, then adjust the volume using the power/volume dial of the audio unit or the up/down switch of the audio control switch.*
- *Audio adjustments other than audio volume can only be done using the portable audio device.*
- *If the connection plug is pulled out from the auxiliary jack while in AUX mode, noise may occur.*

▼How to use USB mode

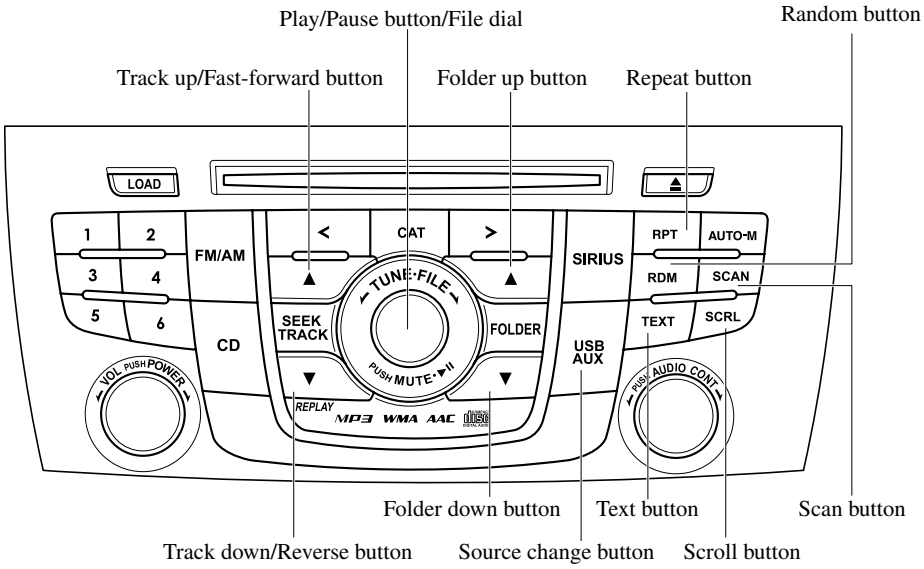

Type	Playable data
USB mode	MP3/WMA/AAC file

Playback

1. Switch the ignition to ACC or ON.
2. Press the power/volume dial to turn the audio system on.
3. Press the source change button (USB AUX) of the audio unit or the mode switch (MODE) of the audio control switches on the steering wheel to switch to the USB mode and start playback.

NOTE

- *When the USB device is not connected, the mode does not switch to USB mode.*
- *When there is no playable data in the USB device, "NO CONTENTS" is indicated.*
- *Playback of the USB device is in the order of the folder numbers. Folders which have no MP3/WMA/AAC files are skipped.*
- *Do not remove the USB device while in the USB mode. The data may be damaged.*

Pause

To stop playback, press the Play/Pause button (▶II).
Press the button again to resume playback.

Fast-forward/Reverse

Press and hold the fast-forward button (▲) to advance through a track at high speed.

Press and hold the reverse button (▼) to reverse through a track at high speed.

Track search

Press the track up button (▲) once to skip forward to the beginning of the next track.
Press the track down button (▼) within a few seconds after playback begins to track down to the beginning of the previous track.
Press the track down button (▼) after a few seconds have elapsed to start playback from the beginning of the current track.

Folder search

To change to the previous folder, press the folder down button (▼), or press the folder up button (▲) to advance to the next folder.

Music Scan

This function scans the titles in a folder currently being played and plays ten seconds of each song to aid you in finding a song you want to listen to.
Press the scan button (SCAN) during playback to start the scan play operation (the track number will flash). Press the scan button (SCAN) again to cancel scan playback.

NOTE
If the unit is left in scan, normal playback will resume where scan was selected.

Repeat playback

(Track repeat)

1. Press the repeat button (RPT) during playback to play the current track repeatedly. “TRACK RPT” is displayed.
2. To cancel the repeat playback, press the button again after 3 seconds.

(Folder repeat)

1. Press the repeat button (RPT) during playback, and then press the button again within 3 seconds to play the tracks in the current folder repeatedly. “FOLDER RPT” is displayed.
2. Press the button again to cancel the repeat playback.

Random playback

Tracks are randomly selected and played.

(Folder random)

1. Press the random button (RDM) during playback to play the tracks in the folder randomly. “FOLDER RDM” is displayed.
2. To cancel the random playback, press the button again after 3 seconds.

(All random)

1. Press the random button (RDM) during playback, and then press the button again within 3 seconds to play the tracks on the USB device randomly. “ALL RDM” is displayed.
2. Press the button again to cancel the random playback.

Switching the display

For files with a file name and other information that have been input, the display switches between display of the file name and other information each time the text button (TEXT) is pressed during playback.

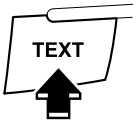

File number/Elapsed time

Folder number/File number

File name

Folder name

Album name

Song name

Artist name

NOTE

- *The information (artist name, music name) is displayed only when the USB device information in the USB device has information which can be displayed on the screen.*
- *This unit cannot display some characters. Characters which cannot be displayed are indicated by an asterisk (*).*

Display scroll

Only 12 characters can be displayed at one time.

To display the rest of the characters of a long title, press the scroll button (SCRL). The display scrolls the next 12 characters. Press the scroll button (SCRL) again after the last 12 characters have been displayed to return to the beginning of the title.

NOTE

The number of characters which can be displayed is restricted.

Error Messages

When the message “CHECK USB” is displayed, it indicates that there is some error in the USB device. Verify that the content recorded in the USB device has MP3/WMA/AAC files and re-connect correctly. If the message reappears, have the unit checked by an Authorized Mazda Dealer.

MEMO

▼How to use iPod mode

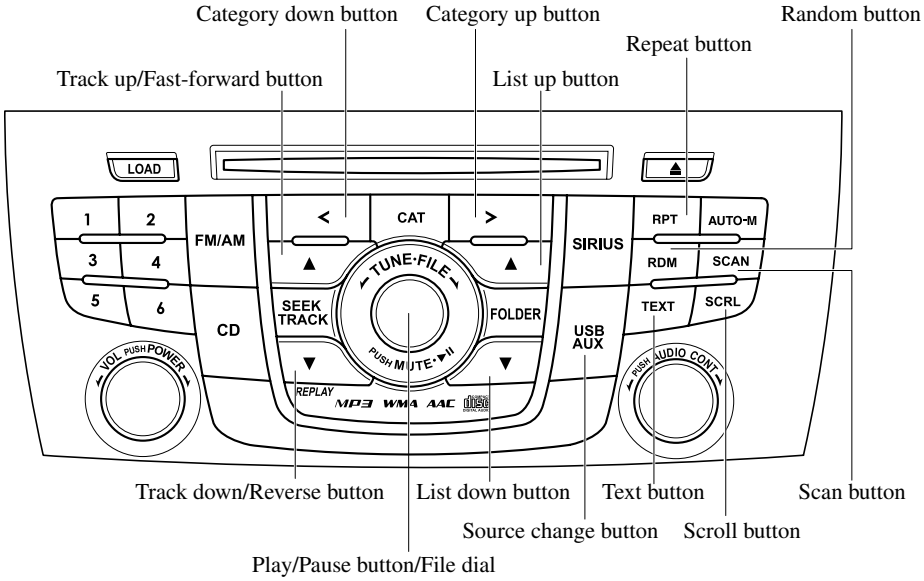

Connectable iPod is as follows:
- iPod: 5G
- iPod classic
- iPod nano: 1/2/3/4/5/6G
- iPod touch*1
- iPhone*1: 3G/3GS/4

*1 For only iPod functions

NOTE
The iPod functions on the iPod cannot be operated while it is connected to the unit because the unit controls the iPod functions.

Playback

1. Switch the ignition to ACC or ON.
2. Press the power/volume dial to turn the audio system on.
3. Press the source change button (USB AUX) of the audio unit or the mode switch (MODE) of the audio control switches on the steering wheel to switch to the iPod mode and start playback.

NOTE
- *When an iPod is not connected, the mode does not switch to the iPod mode.*
- *When there is no playable data in the iPod, "NO CONTENTS" is flashed.*
- *Do not remove the iPod while in the iPod mode. Otherwise, the data could be damaged.*

Pause

To stop playback, press the Play/Pause button (▶II).
Press the button again to resume playback.

Fast-forward/Reverse

Press and hold the fast-forward button (▲) to advance through a track at high speed.
Press and hold the reverse button (▼) to reverse through a track at high speed.

Track search

Press the track up button (▲) once to skip forward to the beginning of the next track.
Press the track down button (▼) within a few seconds after playback begins to track down.
Press the track down button (▼) after a few seconds have elapsed to start playback from the beginning of the track.
The time required to track down/start playback from the beginning of a track varies depending on iPod software version.

Category search

Press the category down button (<) to select the previous category and press the category up button (>) to select the next category.

NOTE
The types of categories include Playlist, Artist, Album, Song, Podcast, Genre, Composer, and Audio book.

List search

Press the list down button (▼) to select the previous list and press the list up button (▲) to select the next list.

NOTE
When the selected category is Song or Audio book, there is no list.

Music Scan

This function scans the titles in a list currently being played and plays ten seconds of each song to aid you in finding a song you want to listen to.
Press the scan button (SCAN) during playback to start the scan play operation (the track number will flash). Press the scan button (SCAN) again to cancel scan playback.

NOTE
If the unit is left in scan, normal playback will resume where scan was selected.

Repeat playback

1. Press the repeat button (RPT) during playback to play the current track repeatedly. “RPT” is displayed.
2. Press the button again to cancel the repeat playback.

Random playback

Tracks are randomly selected and played.

(Song random)

1. Press the random button (RDM) during playback to play the tracks in the list randomly. “SONG RDM” is displayed.
2. To cancel the random playback, press the button again after 3 seconds.

(Album random)

1. Press the random button (RDM) during playback, and then press the button again within 3 seconds to play the tracks on the iPod randomly. “ALBUM RDM” is displayed.
2. Press the button again to cancel the random playback.

NOTE
The track number being played randomly is in the order of the iPod shuffle table.

Switching the display

For files with a file name and other information that have been input, the display switches between display of the file name and other information each time the text button (TEXT) is pressed during playback.

File number/Elapsed time

File number

Category (Playlist title/Genre title/Composer title/Podcast title)

Artist name

Album name

Song name

NOTE
- *The information (artist name, music name) is displayed only when the iPod has information which can be displayed.*
- *This unit cannot display some characters. Characters which cannot be displayed are indicated by an asterisk (✱).*

Display scroll

Only 12 characters can be displayed at one time.

To display the rest of the characters of a long title, press the scroll button (SCRL). The display scrolls the next 12 characters. Press the scroll button (SCRL) again after the last 12 characters have been displayed to return to the beginning of the title.

NOTE
The number of characters which can be displayed is restricted.

Error Messages

If the message “CHECK iPod” is displayed, it indicates that there is a malfunction in the iPod. Verify that the content recorded in the iPod has playable files and connect correctly. If the message reappears, have the unit checked by an Authorized Mazda Dealer.

▼Error Indications

If you see an error indication on the display, find the cause in the chart. If you cannot clear the error indication, take the vehicle to an Authorized Mazda Dealer.

Indication	Cause	Solution
CHECK USB	USB device malfunction	Verify that the content recorded in the USB device has MP3/WMA/AAC files and re-connect correctly. If the error indication continues to display, consult an Authorized Mazda Dealer.
CHECK iPod	iPod malfunction	Verify that the content recorded in the iPod has playable files and re-connect correctly. If the error indication continues to display, consult an Authorized Mazda Dealer.

Safety Certification

This CD player is made and tested to meet exacting safety standards. It meets FCC requirements and complies with safety performance standards of the U.S. Department of Health and Human Services.

⚠ CAUTION

- *This CD player should not be adjusted or repaired by anyone except qualified service personnel.*
  If servicing is required, contact an Authorized Mazda Dealer.
- *Use of controls or adjustments or performance of procedures other than those specified herein may result in hazardous laser exposure. Never operate the CD player with the top case of the unit removed.*
- *Changes or modifications not expressly approved by the party responsible for compliance could void the user's authority to operate this equipment.*

NOTE

For CD player section:
This device complies with part 15 of the FCC Rules. Operation is subject to the following two conditions: (1) This device may not cause harmful interference, and (2) this device must accept any interference received, including interference that may cause undesired operation.

NOTE

This equipment has been tested and found to comply with the limits for a Class B digital device, pursuant to part 15 of the FCC Rules. These limits are designed to provide reasonable protection against harmful interference in a residential installation. This equipment generates, uses, and can radiate radio frequency energy and, if not installed and used in accordance with the instructions, may cause harmful interference to radio communications. However, there is no guarantee that interference will not occur in a particular installation.

Bluetooth® Audio *

▼What is Bluetooth® Audio?

Bluetooth® audio outline

By programming portable audio devices equipped with the Bluetooth® communication function to the vehicle's Bluetooth® unit, you can listen to music or audio recorded on these audio devices from the vehicle's speakers. Bluetooth® audio devices do not need to be plugged into the auxiliary jack.
After programming, operate the audio system's control panel to play/stop the music or audio.

⚠ CAUTION

- *Always program audio devices to the Bluetooth® audio system while the vehicle is stopped.*
- *Because only specified Bluetooth® audio devices can be used, consult an Authorized Mazda Dealer when purchasing or changing devices. Bluetooth® audio devices which correspond to specified Bluetooth® versions and profiles can be Bluetooth®-connected to the vehicle's Bluetooth® unit. However, even among these devices are ones which cannot be Bluetooth®-connected or have limited functionality. Each device to be used with the vehicle's Bluetooth® unit needs to be checked individually for compatibility. Consult an Authorized Mazda Dealer concerning device compatibility.*
  - *U.S.A.*
    Phone: 800-430-0153
    Web: www.MazdaUSA.com/bluetooth
  - *Canada*
    Phone: 800-430-0153
    Web: www.mazdahandsfree.ca
  - *Mexico*
    Center of Attention to Client (CAC)
    Phone: 01-800-01-MAZDA
    Web: www.mazdamexico.com.mx

Applicable Bluetooth® specification
Ver. 2.0 or higher

 *Some models.

Audio profile

- A2DP (Advanced Audio Distribution Profile) Ver. 1.0
- AVRCP (Audio/Video Remote Control Profile) Ver. 1.0/1.3

A2DP is a profile which transmits only audio to the Bluetooth® unit. If your Bluetooth® audio device corresponds only to A2DP, but not AVRCP, you cannot operate it using the control panel of the vehicle's audio system. In this case, the Bluetooth® audio device can be operated by controlling the device itself, the same as when a portable audio system without the Bluetooth® communication function is connected to the AUX terminal.

Function	A2DP	A2DP·AVRCP	
		Ver. 1.0	Ver. 1.3
Playback	No	Yes	Yes
Pause	No	Yes	Yes
File (Track) up/down	No	Yes	Yes
Reverse	No	No	Yes
Fast-forward	No	No	Yes
Text display	No	No	Yes

Yes: Available
No: Not available

NOTE

- *The system may not operate normally depending on the Bluetooth® audio device.*
- *To make sure that your Bluetooth® audio device is Ver. 1.0 or 1.3, refer to the Owner's Manual for the Bluetooth® audio device.*
- *It may not be possible to play a Bluetooth® audio device if it is placed anywhere transmission is compromised, such as inside a metal container or the trunk. Move the Bluetooth® audio device to a location where transmission is possible.*
- *Battery consumption of Bluetooth® audio devices is higher while Bluetooth®-connected.*
- *If a non-Bluetooth® device is to be used, a commercially-available Bluetooth® adapter is required. When playing an audio device with a Bluetooth® adapter installed, programming of the audio device may not be possible or audio may not be heard from the vehicle speakers if the connection of the adapter and the device is poor. If this happens, check if the Bluetooth® adapter is properly connected.*

Bluetooth® Audio

▼Bluetooth® Audio Preparation

Bluetooth® audio device set-up

Bluetooth® audio programming, changes, deletions, and display of programmed device information can be performed.

1. The mode changes as follows each time the audio control dial is pressed. Select “BT SETUP”.

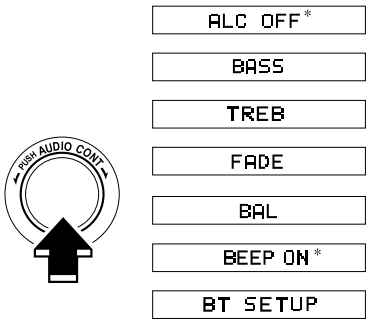

* Depending on the mode selected, the indication changes.

2. Turn the audio control dial and select a desired mode.

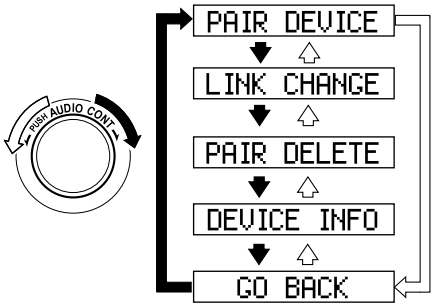

Display	Mode	Function
PAIR DEVICE	Pairing program mode	Bluetooth® audio device programming
LINK CHANGE	Link change mode	Changing link to Bluetooth® audio device
PAIR DELETE	Pairing deletion mode	Deleting link to Bluetooth® audio device
DEVICE INFO	Device information display mode	Displaying vehicle's Bluetooth® unit information

3. Press the audio control dial to determine the mode.

Bluetooth® audio device programming

Any Bluetooth® audio device must be programmed to the vehicle's Bluetooth® unit before it can be listened to over the vehicle's speakers.
A maximum of seven devices including Bluetooth® audio devices and hands-free mobile phones can be programmed to one vehicle.

NOTE

- *Always perform Bluetooth® audio device programming while the vehicle is stopped.*
- *If a Bluetooth® device has already been programmed to the vehicle as a hands-free mobile phone, it does not need to be programmed again when using the device as a Bluetooth® audio device. Conversely, it does not need to be programmed again as a hands-free mobile phone if it has already been programmed as a Bluetooth® audio device.*
- *Look around to be sure other likely Bluetooth® audio devices are not in range when you start to program. If in doubt, move your car to another location. The transmission range of a Bluetooth® audio device is about 10 m (32 ft). Therefore, if there is another Bluetooth® audio device within a 10 m (32 ft) radius of the vehicle, the device may be identified and programmed instead.*
- *Device registration can also be done using voice recognition (page 6-74).*

Concerning the operation of a Bluetooth® audio device itself, refer to its instruction manual.
Some Bluetooth® audio devices have PIN codes (four digits). Refer to the audio device's instruction manual because the programming procedure differs depending on whether it has a PIN code or not.

Programming a Bluetooth® audio device which has a four-digit PIN code

1. Using the audio control dial, select the pairing program mode
   “PAIR DEVICE” in the “BT SETUP” mode. (Refer to “Bluetooth® audio device set-up” for details.)
2. Press the audio control dial to determine the mode.
   After “ENTER PIN” is displayed on the information display for three seconds, “PIN 0000” is displayed and the PIN code can be input.
3. Input the PIN code of your Bluetooth® audio device by pressing channel preset buttons 1 to 4 while “PIN 0000” is displayed.
   Press channel preset button 1 to input the first digit, 2 for the second, 3 for the third, and 4 for the forth. For example, if the PIN code were “4213”, press channel preset button 1 four times (1, 2, 3, 4), button 2 twice (1, 2), button 3 once (1), and button 4 three times (1, 2, 3). If the “PIN 0000” display disappears before finishing the PIN code input, repeat the procedure from Step 1.

NOTE

Some devices accept only a particular pairing code (Usually, “0000” or “1234”).
If pairing cannot be completed, refer to the owner's manual of your mobile device, and try those numbers if necessary.

4. Press the audio control dial while the input PIN code is displayed.
   “PAIRING” flashes on the display.
5. Operate the Bluetooth® audio device and set it to the program mode while “PAIRING” is flashing.
6. When the programming is completed, “♬ ” and “PAIR SUCCESS” are displayed after about 10-30 seconds, after which “PAIR SUCCESS” continues to be displayed for three seconds, and then the unit returns to the normal display.

NOTE

- *Some Bluetooth® audio devices need a certain amount of time before the "♬ " symbol is displayed.*
- *If the programming failed, "Err" flashes for three seconds then it returns to "PAIR DEVICE".*
- *Programming cannot be performed while the vehicle is moving. If you attempt to perform programming while the vehicle is moving, "PAIR DISABLE" is displayed and it returns to "PAIR DEVICE".*
- *If seven Bluetooth® audio devices have already been programmed to the vehicle, programming cannot be performed and "MEMORY FULL" is displayed. Delete one programmed device to program another one.*

Programming a Bluetooth® audio device which does not have a four-digit PIN code

1. Using the audio control dial, select the pairing program mode "PAIR DEVICE" in the "BT SETUP" mode. (Refer to "Bluetooth® audio set up" for details.)
2. Press the audio control dial to determine the mode.
   After "ENTER PIN" is displayed on the information display for three seconds, "PIN 0000" is displayed and the PIN code can be input.
3. Press the audio control dial while "PIN 0000" is displayed.
   "PAIRING" flashes on the display.
4. Operate the Bluetooth® audio device and set it to the program mode while "PAIRING" is flashing.
5. As the Bluetooth® audio device requires a PIN code, input "0000".
6. When the programming is completed, "♬ " and "PAIR SUCCESS" are displayed after about 10-30 seconds, after which "PAIR SUCCESS" continues to be displayed for three seconds, and then the unit returns to the normal display.

NOTE

- *If pairing cannot be completed, try "1234" instead. Refer to the owner's manual of your mobile device for the right PIN code.*
- *Some Bluetooth® audio devices need a certain amount of time before the "♬ " symbol is displayed.*
- *If the programming failed, "Err" flashes for three seconds then it returns to "PAIR DEVICE".*
- *Programming cannot be performed while the vehicle is moving. If you attempt to perform programming while the vehicle is moving, "PAIR DISABLE" is displayed and it returns to "PAIR DEVICE".*
- *If seven Bluetooth® audio devices have already been programmed to the vehicle, programming cannot be performed and "MEMORY FULL" is displayed. Delete one programmed device to program another one.*

Changing the link to a Bluetooth® audio device

If several devices have been programmed, the Bluetooth® unit links the device last programmed. If you would like to link a different programmed device, it is necessary to change the link. The order of device priority after the link has been changed is maintained even when the ignition is switched off.

1. Using the audio control dial, select the link change mode “LINK CHANGE” in the “BT SETUP” mode. (Refer to “Bluetooth® audio device set-up” for details.)
2. Press the audio control dial to determine the mode.
3. The name of the currently linked Bluetooth® audio device is displayed. If no Bluetooth® audio device is currently linked, the name of the first device among the programmed devices is displayed.
4. Turn the audio control dial to select the name of the device you would like to link.

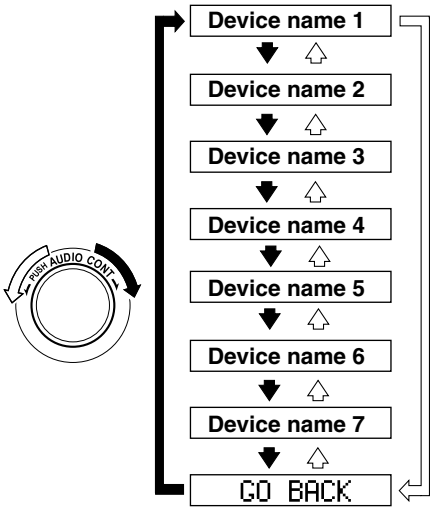

5. Press the audio control dial to select the device you would like to link.
   The “♬” symbol disappears, and “PAIRING” flashes in the display.

NOTE
When “GO BACK” is selected and the audio control dial is pressed, the display returns to “LINK CHANGE”.

6. If the link to the desired device is successful, the “♬” symbol is displayed again, together with “LINK CHANGED”.
   “LINK CHANGED” is displayed for three seconds, then it returns to the normal display.

NOTE

- *Some Bluetooth® audio devices need a certain amount of time before the "♬ " symbol is displayed.*
- *If a hands-free type mobile phone has been the most recently programmed device, the Bluetooth® unit links this device. If you would like to use a Bluetooth® audio type device which has been previously programmed to the Bluetooth® unit, the link must be changed to this device.*
- *If an error occurs while trying to link a device, "Err" flashes in the display for three seconds, and the display returns to "LINK CHANGE". If this occurs, check the programming status of the Bluetooth® audio device and the location of the device in the vehicle (not in the trunk or a metal-type box), and then try the link operation again.*
- *Device selection can also be done using voice recognition (page 6-85).*

How to confirm the device currently linked

Switch to the link-change mode. (Refer to "Changing the link to a Bluetooth® audio device")
The device name displayed first is the device which is currently linked.

Deleting the link to a Bluetooth® audio device

1. Using the audio control dial, select the pairing delete mode "PAIR DELETE" in the "BT SETUP" mode. (Refer to "Bluetooth® audio device set-up" for details.)
2. Press the audio control dial to determine the mode.
3. The name of the first device among the programmed devices is displayed.
4. Rotate the audio control dial and select the name of the programmed device you would like to delete.

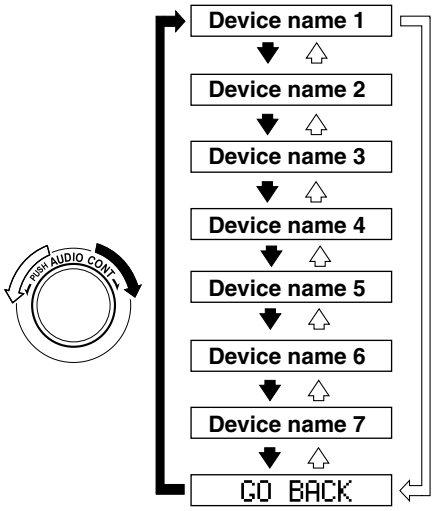

NOTE
Only the names of programmed devices can be displayed. If only one device is programmed, only the name for this device is displayed.

5. If a selection other than "GO BACK" is made and the audio control dial is pressed, "SURE ? NO" is displayed.
6. Rotate the audio control dial clockwise and switch the display to "SURE ? YES".

NOTE
The display changes as follows depending on whether the audio control dial is rotated clockwise or counterclockwise.
-Clockwise: "SURE ? YES" displayed
-Counterclockwise: "SURE ? NO" displayed

7. Press the audio control dial to delete the selected device.

NOTE
Select "GO BACK" and press the audio control dial to return to the "PAIR DELETE" display.

8. "PAIR DELETED" is displayed for three seconds after the deletion is completed, and then it returns to the normal display.

NOTE
If an error occurs while trying to delete the programmed device, "Err" flashes in the display for three seconds and the display returns to "LINK DELETE".

Bluetooth® audio device information display

1. Using the audio control dial, select the pair device information display mode "DEVICE INFO" in the "BT SETUP" mode. (Refer to "Bluetooth® audio device set-up" for details.)
2. Press the audio control dial to determine the mode.
3. The name of the Bluetooth® unit device is displayed.
4. Rotate the audio control dial to select the information for the Bluetooth® unit which you would like to view.

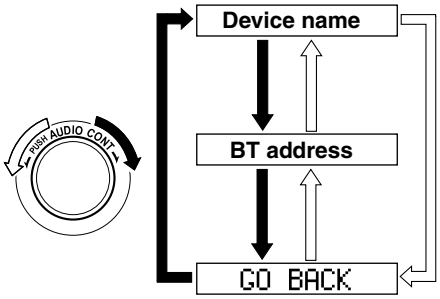

NOTE
When "GO BACK" is selected and the audio control dial is pressed, the display returns to "DEVICE INFO".

▼How to Use the Bluetooth® Audio System

Switching to Bluetooth® audio mode

To listen to music or voice audio recorded to a Bluetooth® audio device, switch to the Bluetooth® audio mode to operate the audio device using the audio system control panel.
Any Bluetooth® audio device must be programmed to the vehicle's Bluetooth® unit before it can be used. (Refer to "Bluetooth® audio device programming")

1. Switch the ignition to ACC or ON.
2. Turn on the Bluetooth® audio device's power.
   Make sure that the "♫ " symbol is displayed in the information display. The symbol is not displayed if an unprogrammed Bluetooth® audio device is being used or the vehicle's Bluetooth® unit has a malfunction.

Bluetooth® Audio

NOTE

Some Bluetooth® audio devices need a certain amount of time before the "♫ " symbol is displayed.

3. Press the source change button (USB AUX) to switch to the Bluetooth® audio mode and start playback.
   If the current device version is lower than AVRCP Ver. 1.3:
   "BT Audio" is displayed.
   If the current device is AVRCP Ver. 1.3:
   The playback time is displayed.

NOTE

- *If the Bluetooth® audio device does not begin playback, press the Play/Pause button (▶II).*
- *If the mode is switched from Bluetooth® audio mode to another mode (radio mode), audio playback from the Bluetooth® audio device stops.*
- *If a call is received on a hands-free mobile phone during playback from the Bluetooth® audio device, the playback is stopped. Playback from the Bluetooth® audio device resumes after the call ends.*

Playback

1. To listen to a Bluetooth® audio device over the vehicle's speaker system, switch the mode to Bluetooth® audio mode. (Refer to "Switching to Bluetooth® audio mode")
2. To stop playback, press the Play/Pause button (▶II).
3. Press the button again to resume playback.

Selecting a file (track)

Short-press the track down button (▼) or turn the file dial counterclockwise: Selects the beginning of the current file (track).
Short-press the track up button (▲) or turn the file dial clockwise: Selects the next file (track).

Fast-forward/Reverse (only AVRCP Ver. 1.3)

Fast-forward

Press and hold the track up button (▲).

Reverse

Press and hold the track down button (▼).

Switching the display (only AVRCP Ver. 1.3)

For files with a song title and other information that have been input, the display switches between display of the song title and other information each time the text button (TEXT) is pressed during playback.

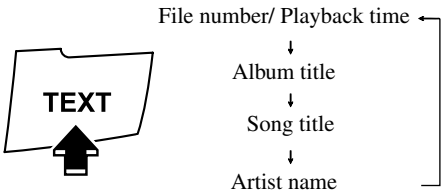

NOTE

- *If title information is not available, "NO TITLE" is displayed.*
- *This unit cannot display some characters. Characters which cannot be displayed are indicated by an asterisk (✱).*

Display scroll

Only 12 characters can be displayed at one time. To display the rest of the characters of a long title, short-press the scroll button (**SCRL**). The display scrolls the next 12 characters. Short-press the scroll button (**SCRL**) again after the last 12 characters have been displayed to return to the beginning of the title.

Bluetooth® Hands-Free*

▼What is Bluetooth® Hands-Free?

Bluetooth® Hands-Free Outline

By connecting a Bluetooth® equipped device (Mobile phone) to the hands-free unit equipped on the vehicle, making and receiving calls is possible using the talk button, pick-up button and hang-up button located on the steering wheel, and saying the voice commands.

⚠ WARNING

Perform phonebook registration related operations while the vehicle is parked:

Performing phonebook registration while driving the vehicle could be a distraction to your driving and result in an accident. In addition, a mistake in performing the phonebook operation could result in the loss of important data.

Bluetooth® equipped device (Mobile phone)

A Bluetooth® equipped device (Mobile phone) communicates with the hands-free unit equipped on the vehicle using radio transmission (Bluetooth®).
For example, if the device (Mobile phone) is placed in a coat pocket, the phone calls can be made through your mobile service without taking out and handling the device (Mobile phone).

⚠ CAUTION

The types of devices (Mobile phone) which can be connected to the hands-free unit are limited. Therefore, before purchasing or changing your device (Mobile phone) model, consult Mazda Bluetooth® Hands-Free Customer Service or visit www.MazdaUSA.com/bluetooth for a complete list of compatible phones. Devices (Mobile phone) which can be connected to the hands-free system need to be compliant with Bluetooth® specifications and the appropriate profile. However, even among these Bluetooth® devices (Mobile phone) are some which will not connect with your Mazda or will have limited function. Therefore, consult Mazda Bluetooth® Hands-Free Customer Service for information regarding device (Mobile phone) compatibility:

- *U.S.A.*
  Phone: 800-430-0153
  Web: www.MazdaUSA.com/bluetooth
- *Canada*
  Phone: 800-430-0153
  Web: www.mazdahandsfree.ca
- *Mexico*
  Center of Attention to Client (CAC)
  Phone: 01-800-01-MAZDA
  Web: www.mazdamexico.com.mx

Applicable Bluetooth® specification
Ver. 2.0 or higher
Response profile

- HFP (Hands Free Profile) Ver. 1.5
- DUN (Dial-up Networking Profile) Ver. 1.1
- PBAP (Phone Book Access Profile) Ver. 1.0

*Some models.

- A2DP (Advanced Audio Distribution Profile) Ver. 1.0
- OPP (Object Push Profile) Ver. 1.1

NOTE

- *The Bluetooth® Hands-Free system is operable several seconds after the ignition is switched to ACC or ON (requires less than 15 seconds).*
- *If the ignition is switched off during a hands-free call, the line is transferred to the device (Mobile phone) automatically.*
- *If the device (Mobile phone) is in a location where radio reception is difficult such as a metal container or in the trunk, the call may not be connected using Bluetooth®. If communication is not possible, change the location of the device (Mobile phone).*

▼Component Parts

Bluetooth® Hands-Free consists of the following items:

- Talk button
- Pick-up button
- Hang-up button
- Information display
- Microphone
- Audio unit

Talk button, Pick-Up button and Hang-Up button

Basic functions of Bluetooth® Hands-Free can be used for such things as making calls or hanging up using the talk button, pick-up button and hang-up button on the steering wheel.

NOTE

The talk button, pick-up button, and hang-up button are operable with the audio unit turned off.

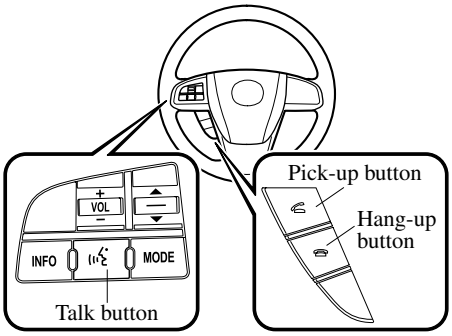

Talk button operations

A short press or a long press of the talk button is used to operate the system as follows:

- Short press (Press the button less than 0.7 sec.)
- Long press (Press the button 0.7 sec. or more.)

Information display

When available, the information display shows telephone numbers, Bluetooth® Hands-Free messages, and operation status.

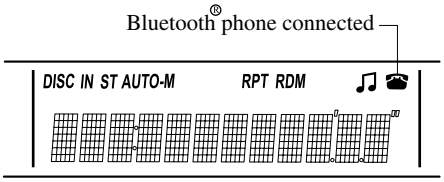

Microphone

The microphone is used for speaking voice commands or exchanging conversation.

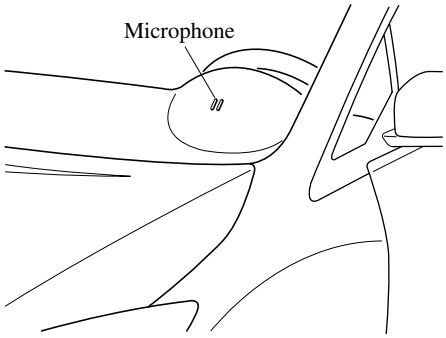

Audio unit

The audio unit is used for adjusting the volume.

▼Voice

To prevent the deterioration in voice recognition rate and voice quality, the following points must be observed:

- It is not necessary to face the microphone or approach it. Speak the voice commands while maintaining a safe driving position.
- Close the windows and/or the moonroof to reduce loud noises from outside the vehicle, or turn down the airflow of the climate control system while Bluetooth® Hands-Free is being used. Voice recognition may not function correctly or voice quality may deteriorate under the following conditions.
  - A passenger is speaking.
  - Driving with the window and/or the moonroof open.
  - Driving on bumpy roads.
  - Noise outside of the vehicle is loud. (Construction sites, inside tunnels, excess oncoming traffic, or heavy rain.)
  - Operation noise from turn signals, wipers, or the horn is heard.
  - A/C airflow is strong or wind is blowing on the microphone.
  - There is noise coming from cargo loaded in the vehicle.
- Voice commands may not be recognized depending on the voice. If the voice commands are not recognized correctly, repeat the commands in a louder voice, at a natural pace, as if speaking to another person.
- Dialects or different wording other than hands-free prompts cannot be recognized by voice recognition. Speak in the wording specified by the voice commands.

NOTE

If the voice recognition performance is not satisfactory, refer to “Voice Recognition Learning Function (Speaker Enrollment)” (page 6-89).

Please be aware that the voice recognition may still make an error despite following the above points.

▼Function Restrictions While Using Bluetooth® Hands-Free

Some functions are limited while Bluetooth® Hands-Free is being used. They include:

- Beep sound and voice guidance related to the audio unit are not heard.
- Beep sound related to the A/C operation is not heard.

▼How to Use This Section

Descriptions in the text are as follows:
Say: Voice commands to be spoken by you.
Prompt: Voice guidance output from the speaker.

NOTE
Say voice commands after the beep sound [Beep] is heard.

Example)
Say: [Beep] “Dial”
Prompt: “Number, please”
Say: [Beep] “XXXXXXXXXXX (Ex. “555-1234”) (Telephone number)”

Bluetooth® Hands-Free Activation Method

Press the pick-up button or talk button with a short press.
The hands-free system is activated.
Functions of the hands-free telephone, such as making and receiving calls, can be used after the activation. (For details on the telephone functions, refer to “Basic Bluetooth® Hands-Free Operation” or “Convenient Use of the Hands-Free System”.)

Tutorial

The tutorial explains how to use Bluetooth® Hands-Free.
To activate the tutorial, do the following:

1. Press the pick-up button or talk button with a short press.
2. **Say:** [Beep] “Tutorial”
3. Follow the prompts to receive the appropriate voice guidance instructions.

▼Useful Commands at Anytime, Convenient Operations

Help function use

The help function informs the user of all the available voice commands under the current conditions.

1. Press the talk button with a short press.
2. **Say:** [Beep] “Help”
3. Follow the prompts to receive the appropriate voice guidance instructions.

Cancel

The Bluetooth® Hands-Free system transitions to standby status if the following operation is performed while the system is activating.
Press the hang-up button, or the talk button with a long press.

Returning to previous operation

This command is for returning to the previous operation while in the voice recognition mode.
Say: [Beep] “Go Back”

Voice guidance interrupt operation

Voice guidance can be skipped by pressing the talk button with a short press while it is being heard. A new voice input command can then be spoken by the user.

Voice recognition mode cancel

If you want to cancel the voice recognition mode during a call, the voice recognition mode can be canceled without having to end the call.
Press the talk button with a long press.

Basic Bluetooth® Hands-Free Operation

▼Bluetooth® Hands-Free Preparation

Language setting

The available languages are English, Spanish, and Canadian French. If the language setting is changed, all of the voice guidance and voice input commands are done in the selected language.

NOTE

- *If the language setting is changed, device registration is maintained.*
  Phonebook records are not cleared, but each language has a separate phonebook. Therefore, entries created in one language will need to be re-entered in the phonebook of the new language.
- *Do these steps before you start driving. These less used functions are too distracting to undertake while driving until you are fully familiar with the system.*

Method 1

1. Press the pick-up button or talk button with a short press.
2. **Say:** [Beep] “Setup”
3. **Prompt:** “Select one of the following: Pairing options, confirmation prompts, language, passcode, select phone or select music player.”
4. **Say:** [Beep] “Language”
5. **Prompt:** “Select a language: English, French, or Spanish.”
6. **Say:** [Beep] “French” (Speak the desired language: “English”, “French” or “Spanish”)

NOTE
Other language settings can also be made while in the current setting by saying the name of the language in the native pronunciation.

7. **Prompt:** “French (Desired language) selected. Is this correct?”
8. **Say:** [Beep] “Yes”
9. **Prompt:** “Please wait. Switching to French phonebook. French selected.” (Spoken in the newly selected language).

Method 2

1. Press the pick-up button or talk button with a short press.
2. **Say:** [Beep] “French” (Say the desired language: “English”, “French”, or “Spanish”.) (Change the desired language by saying the language name.)

NOTE
Other language settings can also be made while in the current setting by saying the name of the language in the native pronunciation.

3. **Prompt:** “Would you like to change the language to French (Desired language)?”
4. **Say:** [Beep] “Yes”
5. **Prompt:** “Please wait. Switching to French phonebook. French selected.” (Spoken in the newly selected language).

Pairing code setting

The 4-digit pairing code setting for registration of your cell phone (pairing) can be set beforehand.

NOTE
The initial setting value is “0000”.

1. Press the pick-up button or talk button with a short press.
2. **Say:** [Beep] “Setup”
3. **Prompt:** “Select one of the following: Pairing options, confirmation prompts, language, passcode, select phone or select music player.”
4. **Say:** [Beep] “Pairing options”
5. **Prompt:** “Select one of the following: Pair, Edit, Delete, List, or Set Pairing Code.”
6. **Say:** [Beep] “Set pairing code”
7. **Prompt:** “Your current pairing code is XXXX. Do you want to change it to a different pairing code?”
8. **Say:** [Beep] “Yes”
9. **Prompt:** “Please say a 4-digit pairing code.”
10. **Say:** [Beep] “YYYY”
11. **Prompt:** “YYYY is this correct?”
12. **Say:** [Beep] “Yes” or “No”
13. If “Yes”, go to Step 14. If “No”, the procedure returns to Step 9.
14. **Prompt:** “Your new pairing code is YYYY. Use this pairing code when pairing devices to the Hands free system. Do you want to pair a device now?”
15. **Say:** [Beep] “Yes” or “No”
16. If “Yes”, the system switches to the device registration mode. If “No”, the system returns to standby status.

Device programming (Pairing)

To use Bluetooth® Hands-Free, the device equipped with Bluetooth® has to be programmed to the hands-free unit using the following procedure.
A maximum of seven devices including hands-free mobile phones and Bluetooth® audio devices can be programmed to one vehicle.

NOTE

- *A device can be programmed only when the vehicle is parked. If the vehicle starts to move, the pairing procedure will end. Programming is dangerous while driving - pair up your device before you start driving. Park the car in a safe place before programming.*
- *If a Bluetooth® device has already been programmed to the vehicle as a Bluetooth® audio device, it does not need to be programmed again when using the device as a hands-free mobile phone. Conversely, it does not need to be programmed again as a Bluetooth® audio device if it has already been programmed as a hands-free mobile phone.*
- *Since the communication range of a Bluetooth® equipped device is about 10 meters (32 ft), if a device is placed within a 10-meter (32 ft) radius of the vehicle, it may be detected/programmed unintentionally while another device is being programmed.*

1. Activate the Bluetooth® application of the device.

NOTE
For the operation of the device, refer to its instruction manual.

2. Press the pick-up button or talk button with a short press.
3. **Say:** [Beep] “Setup”
4. **Prompt:** “Select one of the following: Pairing options, confirmation prompts, language, passcode, select phone or select music player.”
5. **Say:** [Beep] “Pairing options”
6. **Prompt:** “Select one of the following: Pair, Edit, Delete, List, or Set Pairing Code.”
7. **Say:** [Beep] “Pair”
8. **Prompt:** “Start the pairing process on your Bluetooth® device. Your pairing code is 0000 (XXXX). Input this code on your Bluetooth® device when prompted on the device. See device manual for instructions.”
9. Using the device, perform a search for the Bluetooth® device (Peripheral device).

NOTE
For the operation of the device, refer to its instruction manual.

10. Select “Mazda” from the device list searched by the device.
11. Input the 4-digit pairing code to the device.
12. **Prompt:** “Please say the name of the device after the beep.”
13. **Say:** [Beep] “XXXX - - -” (Speak a “device tag”, an arbitrary name for the device.)
    Example: “Stan's device.”

NOTE
Speak a programmed “device tag” within 10 seconds.
If more than two devices are to be programmed, they cannot be programmed with the same or similar “device tag”.

14. **Prompt:** “XXXXXX - - - (Ex. “Stan's device”) (Device tag). Is this correct?”
15. **Say:** [Beep] “Yes”
16. **Prompt:** “Pairing complete”

After a device is registered, the system automatically identifies the device. By activating Bluetooth® Hands-Free again, or by activating Bluetooth® Hands-Free first after switching the ignition from OFF to ACC, the system reads out a voice guidance, “XXXXXX - - - (Ex. “Stan's device”) (Device tag) is connected”.

NOTE

- *Device registration can also be done by operating the audio unit.*
  Refer to Bluetooth® Audio Preparation on page 6-62.
- *Depending on the device, the registration status may be lost after a certain period of time. If this occurs, repeat the entire process from Step 1.*

▼Making a Call Using a Telephone Number

NOTE

Practice this while parked until you are confident you can do it while driving in a non-taxing road situation. If you are not completely comfortable, make all calls from a safe parking position, and move out only when fully under control and you can devote your eyes and mind to driving.

1. Press the pick-up button or talk button with a short press.
2. **Say:** [Beep] “Dial”
3. **Prompt:** “Number, please”
4. **Say:** [Beep] “XXXXXXXXXXX (Telephone number)”
5. **Prompt:** “XXXXXXXXXXX. (Telephone number) After the beep, continue to add numbers, or say Go-Back to re-enter the last entered numbers, or press the Pick-Up button to execute dialing.”
6. **(Dialing)**
   Press the pick-up button or say “Dial”, then go to Step 7.
   (Adding/inputting telephone number)
   Say, “XXXX” (desired telephone number), then go to Step 5.
   (Telephone number correction)
   Say, “Go Back”. The prompt replies, “Go Back. The last entered numbers have been removed.”. Then go back to Step 3.
7. **Prompt:** “Dialing”

NOTE

The “Dial” command and a telephone number can be combined.
Ex. In Step 2, say, “Dial 123-4567”, then, Steps 3 and 4 can be skipped.

Bluetooth® Hands-Free

▼Receiving an Incoming Call

1. **Prompt:** “Incoming call, press the pickup button to answer”.
2. To accept the call, press the pick-up button.
   To reject the call, press the hang-up button.

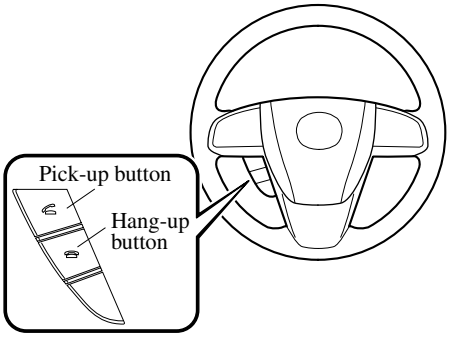

▼Hanging Up a Call

Press the hang-up button during the call. A beep sound will confirm that call is ended.

▼Volume Adjustment

The power/volume dial of the audio unit is used to adjust the volume. Turn the dial to the right to increase volume, to the left to decrease it.

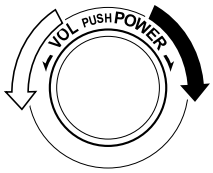

NOTE

- *The volume can also be adjusted using the volume button on the steering wheel.*
- *The music volume of the audio unit cannot be adjusted while Bluetooth Hands-Free is being used.*

Convenient Use of the Hands-Free System

▼Phonebook Usage

Phonebook registration

Phone numbers can be registered to the Bluetooth® Hands-Free phonebook.

NOTE
Do this function only when parked. It is too distracting to attempt while driving and you may make too many errors to be effective.

1. Press the pick-up button or talk button with a short press.
2. **Say:** [Beep] “Phonebook”
3. **Prompt:** “Select one of the following: New entry, edit, list names, delete, erase all or import contact.”
4. **Say:** [Beep] “New entry”
5. **Prompt:** “Name please.”
6. **Say:** [Beep] “XXXXX... (Ex. “Mary's phone”)” (Say a voice tag for the name registered.)
7. **Prompt:** “Adding XXXXX... (Ex. “Mary's phone”) (Registered voice tag). Is this correct?”
8. **Say:** [Beep] “Yes”
9. **Prompt:** “Home, Work, Mobile, or Other?”
10. **Say:** [Beep] “Mobile” (Say “Home”, “Work”, “Mobile”, or “Other”, for the desired location to be registered.)
11. **Prompt:** “Mobile (Location to be registered). Is this correct?”
12. **Say:** [Beep] “Yes”
13. **Prompt:** “Number, please.”
14. **Say:** [Beep] “XXXXXXXXXXX” (Say the phone number to be registered.)
15. **Prompt:** “XXXXXXXXXXX (Phone number registration). After the beep, continue to add numbers, or say Go-Back to re-enter the last entered numbers, or press the Pick-Up button to save the number.”
16. **(Registration)**
    Press the pick-up button or say “Enter”, then go to Step 17.
    (Adding/inputting telephone number)
    Say, “XXXX” (desired telephone number), then go to Step 15.
    (Telephone number correction)
    Say, “Go Back”. The prompt replies, “Go Back. The last entered numbers have been removed.”. Then go back to Step 13.
17. **Prompt:** “Number saved. Would you like to add another number for this entry?”
18. **Say:** [Beep] “Yes” or “No”.
19. If “Yes”, an additional phone number registration can be made for the same entry.
    If “No”, the system returns to standby status.

Import contact

Phonebook data from your device (Mobile phone) can be sent and registered to your Bluetooth® Hands-Free phonebook using Bluetooth®.

1. Press the pick-up button or talk button with a short press.
2. **Say:** [Beep] “Phonebook”

3. **Prompt:** “Select one of the following: New entry, edit, list names, delete, erase all or import contact.”
4. **Say:** [Beep] “Import contact”
5. **Prompt:** “The hands free System is ready to receive a contact from a phone. Only a home, a work, and a mobile number can be imported. This process requires operation of a mobile phone. Refer to the phone's manual for more information.”
6. Device (Mobile phone) operation: Select one entry from the phonebook and send it using Bluetooth®.
7. **Prompt:** “X (Number of locations which include data) numbers have been imported. What name would you like to use for these numbers?”
8. **Say:** [Beep] “XXXXX... (Ex. “Mary's phone”)” (Say a voice tag for the name registered.)
9. **Prompt:** “Adding XXXXX... (Ex. “Mary's phone”) (Voice tag). Is this correct?”
10. **Say:** [Beep] “Yes”
11. **Prompt:** “Number saved. Would you like to import another contact?”
12. **Say:** [Beep] “Yes” or “No”
13. If “Yes”, the procedure proceeds to Step 5.
    If “No”, the system returns to standby status.

Making calls using the phonebook

Telephone calls can be made by saying the name of a person (voice tag) whose phone number has been registered in Bluetooth® Hands-Free in advance.

For the phonebook setting method, refer to (page 6-83).

1. Press the pick-up button or talk button with a short press.
2. **Say:** [Beep] “Call”
3. **Prompt:** “Name please.”
4. **Say:** [Beep] “XXXXX... (Ex. “John's phone”)” (Say a voice tag registered in the phonebook.)
5. **Prompt:** “Calling XXXXX... (Ex. “John's phone”) XXXX (Ex. “at home”). Is this correct?” (Voice tag and phone number location registered in phonebook).
6. **Say:** [Beep] “Yes”
7. **Prompt:** “Dialing”

NOTE
The “Call” command and the voice tag can be combined.
Ex. In Step 2, say, “Call John's phone”, then, Steps 3 and 4 can be skipped.

▼Redialing Function

Redialing the number of the person previously dialed using the phone is possible.

1. Press the pick-up button or talk button with a short press.
2. **Say:** [Beep] “Redial”
3. **Prompt:** “Dialing”

▼Emergency Calls

A call can be made to the emergency phone number (911: U.S.A/Canada, 066: Mexico) using the voice input command. It may not function properly in some areas in Mexico.

1. Press the pick-up button or talk button with a short press.
2. **Say:** [Beep] “Emergency”
3. - USA/Canada vehicles - **Prompt:** “Dialing “911”, is this correct?”
   - Mexico vehicles - **Prompt:** “Dialing “066”, is this correct?”
4. **Say:** [Beep] “Yes”
5. **Prompt:** “Dialing”

▼Refusing an Incoming Call

For incoming call refusal, refer to “Receiving an incoming call” (page 6-78).

▼Mute

The microphone can be muted during a call.

1. Press the talk button with a short press.
2. **Say:** [Beep] “Mute”
3. **Prompt:** “Microphone muted”

Canceling mute

1. Press the talk button with a short press.
2. **Say:** [Beep] “Mute off”
3. **Prompt:** “Microphone unmuted”

▼Transferring a Call

Transferring a call from Hands-Free to a device (Mobile phone)

Communication between the hands-free unit and a device (Mobile phone) is canceled, and the line can be switched to a standard call using a device (Mobile phone).

1. Press the talk button with a short press.
2. **Say:** [Beep] “Transfer call”
3. **Prompt:** “Transferred call to phone”

Transferring a call from a device (Mobile phone) to Hands-Free

Communication between devices (Mobile phone) can be switched to Bluetooth® Hands-Free.

1. Press the talk button with a short press.
2. **Say:** [Beep] “Transfer call”
3. **Prompt:** “Transferred call to Hands Free system”

▼Multi-Call Functions

Call waiting

A call can be interrupted to receive an incoming call from a third party.

Call interrupt

A call can be switched to a new incoming call.

Method 1

1. Press the pick-up button.
2. **Prompt:** “Swapping calls.”

Method 2

1. Press the talk button with a short press.
2. **Say:** [Beep] “Swap calls”

3. **Prompt:** “Swapping calls”

NOTE

- *To refuse an incoming call, press the hang-up button.*
- *After receiving a new incoming call, the previous call is placed on hold.*

Switching calls

Switching back to the previous call can also be done.

Method 1

1. Press the pick-up button.
2. **Prompt:** “Swapping calls.”

Method 2

1. Press the talk button with a short press.
2. **Say:** [Beep] “Swap calls”
3. **Prompt:** “Swapping calls”

Three-way call function

1. Press the talk button with a short press.
2. **Say:** [Beep] “Join calls”
3. **Prompt:** “Joining calls”

Making a call using a telephone number

1. Press the talk button with a short press.
2. **Say:** [Beep] “Dial”
3. **Prompt:** “Number, please”
4. **Say:** [Beep] “XXXXXXXXXXX (Telephone number)”
5. **Prompt:** “XXXXXXXXXXX. (Telephone number) After the beep, continue to add numbers, or say Go-Back to re-enter the last entered numbers, or press the Pick-Up button to execute dialing.”
6. **(Dialing)**
   Press the pick-up button or say “Dial”, then go to Step 7.
   (Adding/inputting telephone number)
   Say, “XXXX” (desired telephone number), then go to Step 5.
   (Telephone number correction)
   Say, “Go Back”. The prompt replies, “Go Back. The last entered numbers have been removed.”. Then go back to Step 3.
7. **Prompt:** “Dialing”

Making calls using the phonebook

1. Press the talk button with a short press.
2. **Say:** [Beep] “Call”
3. **Prompt:** “Name please.”
4. **Say:** [Beep] “XXXXX... (Ex. “John's phone”)” (Say a voice tag registered in the phonebook.)
5. **Prompt:** “Calling XXXXX... (Ex. “John's phone”) XXXX (Ex. “at home”). Is this correct?” (Voice tag and phone number location registered in phonebook).
6. **Say:** [Beep] “Yes”
7. **Prompt:** “Dialing”

Redialing function

1. Press the talk button with a short press.
2. **Say:** [Beep] “Redial”
3. **Prompt:** “Dialing”

Ending the current call

Press the hang-up button during the call.

▼Phonebook Settings

Editing phonebook

The data registered to the Bluetooth® Hands-Free phonebook can be edited.

NOTE
Do this function only when parked. It is too distracting to attempt while driving and you may make too many errors to be effective.

1. Press the pick-up button or talk button with a short press.
2. **Say:** [Beep] “Phonebook”
3. **Prompt:** “Select one of the following: New entry, edit, list names, delete, erase all or import contact.”
4. **Say:** [Beep] “Edit”
5. **Prompt:** “Please say the name of the entry you would like to edit or say, “List names”.”
6. **Say:** [Beep] “XXXXX... (Ex. “Mary's phone”)” (Say the voice tag for the registered name to be edited in the phonebook.)
7. **Prompt:** “Home, Work, Mobile, or Other?”
8. **Say:** [Beep] “Home” (Say the registered location to be edited: “Home”, “Work”, “Mobile”, or “Other”).
9. **Prompt:** “XXXXX... (Ex. “Mary's phone”) (Registered voice tag) XXXX (Ex. “Home”) (Registered location). Is this correct?”
10. **Say:** [Beep] “Yes”
11. **Prompt:** “The current number is XXXXXXXXXXX (Ex. “555-1234”) (Currently registered number). New number, please.”

NOTE
If there was no previous phone number registered to a location (Ex. “Work”), the prompt will only read out “Number, please”.

12. **Say:** [Beep] “XXXXXXXXXXX (Ex. “555-5678”)” (Say the new phone number to be registered.)
13. **Prompt:** “XXXXXXXX (Telephone number) After the beep, continue to add numbers, or say Go-Back to re-enter the last entered numbers, or press the Pick-Up button to save the number.”
14. **(Number Change)**
    Press the pick-up button, then go to Step 15.
    (Adding/inputting telephone number)
    Say, “XXXX” (desired telephone number), then go to Step 13.
    (Telephone number correction)
    Say, “Go Back”. The prompt replies, “Go Back. The last entered numbers have been removed. Number, please.” . Then go back to Step 12.
15. **Prompt:** “Number changed.”

Phonebook data deletion

Erasing individual phonebook data

Individual data registered to the Bluetooth® Hands-Free phonebook can be cleared.

NOTE
Do this function only when parked. It is too distracting to attempt while driving and you may make too many errors to be effective.

1. Press the pick-up button or talk button with a short press.
2. **Say:** [Beep] “Phonebook”
3. **Prompt:** “Select one of the following: New entry, edit, list names, delete, erase all or import contact.”
4. **Say:** [Beep] “Delete”
5. **Prompt:** “Please say the name of the entry you would like to delete or say, “List names”.”
6. **Say:** [Beep] “XXXXX... (Ex. “John's phone”)” (Say the registered voice tag to be deleted from the phonebook.)
7. **Prompt:** “Deleting XXXXX... (Ex. “John's phone”) (Registered voice tag) Home (Registered location). Is this correct?”
8. **Say:** [Beep] “Yes”
9. **Prompt:** “XXXXX... (Ex. “John's phone”) (Registered voice tag) Home (Registered location) deleted.”

Complete deletion of the phonebook data

All data registered to the Bluetooth® Hands-Free phonebook can be erased.

NOTE
Do this function only when parked. It is too distracting to attempt while driving and you may make too many errors to be effective.

1. Press the pick-up button or talk button with a short press.
2. **Say:** [Beep] “Phonebook”
3. **Prompt:** “Select one of the following: New entry, edit, list names, delete, erase all or import contact.”
4. **Say:** [Beep] “Erase all”
5. **Prompt:** “Are you sure you want to erase everything from your Hands Free system phonebook?”
6. **Say:** [Beep] “Yes”
7. **Prompt:** “You are about to delete everything from your Hands Free system phonebook. Do you want to continue?”
8. **Say:** [Beep] “Yes”
9. **Prompt:** “Please wait, erasing the Hands Free system phonebook.”
10. **Prompt:** “Hands-Free system phonebook erased.”

Read-out of names registered to the Bluetooth® Hands-Free phonebook

Bluetooth® Hands-Free can read out the list of names registered to its phonebook.

1. Press the pick-up button or talk button with a short press.
2. **Say:** [Beep] “Phonebook”
3. **Prompt:** “Select one of the following: New entry, edit, list names, delete, erase all or import contact.”
4. **Say:** [Beep] “List names”
5. **Prompt:** “XXXXX..., XXXXX..., XXXXX... (Ex. “John's phone”, Mary's phone, Bill's phone)” (Voice guidance reads out the voice tags registered to the phonebook.)

Press the talk button with a short press during the read-out at the desired name, and then say one of the following voice commands to execute it.

- “Continue”: Continues the list read-out.

- “Call”: Calls the registered phonebook data when the talk button is short-pressed.
- “Edit”: Edits the registered phonebook data when the talk button is short-pressed.
- “Delete”: Deletes the registered phonebook data when the talk button is short-pressed.
- “Previous”: Returns to the previous phonebook data in read-out when the talk button is short-pressed.

6. **Prompt:** “End of list, would you like to start from the beginning?”
7. **Say:** [Beep] “No”
8. The procedure returns to Step 3.

▼DTMF (Dual Tone Multi-Frequency Signal) Transmission

This function is used when transmitting DTMF via the user's voice. The receiver of a DTMF transmission is generally a home telephone answering machine or a company's automated guidance call center (When you send tone signals back according to the voice guidance recording).

1. Press the talk button with a short press.
2. **Say:** [Beep] “XXXX... send” (Say DTMF code)
3. **Prompt:** “Sending XXXX... (DTMF code)”

Hands-Free Setting

▼Device

Device registration

For the registration of a Bluetooth® equipped device to Bluetooth® Hands-Free.
Refer to Bluetooth® Hands-Free Preparation on page 6-74.

Registered device read-out

Bluetooth® Hands-Free can read-out the devices registered to its system.

NOTE
Do this function only when parked. It is too distracting to attempt while driving and you may make too many errors to be effective.

1. Press the pick-up button or talk button with a short press.
2. **Say:** [Beep] “Setup”
3. **Prompt:** “Select one of the following: Pairing options, confirmation prompts, language, passcode, select phone or select music player.”
4. **Say:** [Beep] “Pairing options”
5. **Prompt:** “Select one of the following: Pair, Edit, Delete, List, or Set Pairing Code.”
6. **Say:** [Beep] “List”
7. **Prompt:** “XXXXX..., XXXXX..., XXXXX... (Ex. Device A, device B, device C)” (The voice guidance reads out the device tags registered to the hands-free system.)

Press the talk button with a short press during the read-out at the desired device, and then say one of the following voice commands to execute it.

- “Select phone”: Selects device (Mobile phone) when the talk button is short-pressed.
- “Select music player”: Selects device (Music player) when the talk button is short-pressed.
- “Edit”: Edits device when the talk button is short-pressed.
- “Continue”: Continues the list read-out.
- “Delete”: Deletes the registered device when the talk button is short-pressed.
- “Previous”: Returns to the previous device in read-out when the talk button is short-pressed.

8. **Prompt:** “End of list, would you like to start from the beginning?”
9. **Say:** [Beep] “No”
10. **Prompt:** “Returning to main menu.”

Device selection

If several devices have been programmed, the Bluetooth® unit links the device last connected. If you would like to link a different programmed device, it is necessary to change the link. The order of device priority after the link has been changed is maintained even when the ignition is switched off.

Hands-free phone

1. Press the pick-up button or talk button with a short press.
2. **Say:** [Beep] “Setup”
3. **Prompt:** “Select one of the following: Pairing options, confirmation prompts, language, passcode, select phone or select music player.”
4. **Say:** [Beep] “Select phone”
5. **Prompt:** “Please say the name of the device you would like to select. Available devices are XXXXX... (Ex. device A), XXXXX... (Ex. device B), XXXXX... (Ex. device C). Which device please?”
6. **Say:** [Beep] “XXXXX... (Ex. Device B)”
7. **Prompt:** “XXXXX... (Ex. Device B). Is this correct?”
8. **Say:** [Beep] “Yes” or “No”
9. If “Yes”, go to Step 10. If “No”, the procedure returns to Step 5.
10. **Prompt:** “XXXXX... (Ex. Device B) selected.”

Music player

1. Press the pick-up button or talk button with a short press.
2. **Say:** [Beep] “Setup”
3. **Prompt:** “Select one of the following: Pairing options, confirmation prompts, language, passcode, select phone or select music player.”
4. **Say:** [Beep] “Select music player”
5. **Prompt:** “Please say the name of the device you would like to select. Available devices are XXXXX... (Ex. device A), XXXXX... (Ex. device B), XXXXX... (Ex. device C). Which device please?”

6. **Say:** [Beep] “XXXXX... (Ex. Device B)”
7. **Prompt:** “XXXXX... (Ex. Device B). Is this correct?”
8. **Say:** [Beep] “Yes” or “No”
9. If “Yes”, go to Step 10. If “No”, the procedure returns to Step 5.
10. **Prompt:** “XXXXX... (Ex. Device B) selected.”

NOTE
Device (Music player) selection can also be done by operating the panel button (page 6-62).

Registered device (Mobile phone) deletion

Registered devices (Mobile phone) can be deleted individually or collectively.

NOTE
Do this function only when parked. It is too distracting to attempt while driving and you may make too many errors to be effective.

1. Press the pick-up button or talk button with a short press.
2. **Say:** [Beep] “Setup”
3. **Prompt:** “Select one of the following: Pairing options, confirmation prompts, language, passcode, select phone or select music player.”
4. **Say:** [Beep] “Pairing options”
5. **Prompt:** “Select one of the following: Pair, Edit, Delete, List, or Set Pairing Code.”

NOTE
A registered device (Mobile phone) can be deleted using the registration list.

6. **Say:** [Beep] “Delete”
7. **Prompt:** “Please say the name of the device you would like to delete. Available devices are XXXXX... (Ex. device A), XXXXX... (Ex. device B), XXXXX... (Ex. device C), or all. Which device please?”
8. **Say:** [Beep] “XXXXX... (Ex. device B)”

NOTE
Say “All” to delete all devices (Mobile phone).

9. **Prompt:** “Deleting XXXXX... (Ex. device B...) (Registered device tag). Is this correct?”
10. **Say:** [Beep] “Yes”
11. **Prompt:** “Deleted”

Registered device editing

1. Press the pick-up button or talk button with a short press.
2. **Say:** [Beep] “Setup”
3. **Prompt:** “Select one of the following: Pairing options, confirmation prompts, language, passcode, select phone or select music player.”
4. **Say:** [Beep] “Pairing options”
5. **Prompt:** “Select one of the following: Pair, Edit, Delete, List, or Set Pairing Code.”
6. **Say:** [Beep] “Edit”
7. **Prompt:** “Please say the name of the device you would like to edit. Available devices are XXXXX... (Ex. device A), XXXXX... (Ex. device B), XXXXX... (Ex. device C). Which device please?”

8. **Say:** [Beep] “XXXXX... (Ex. device C)”
9. **Prompt:** “New name please?”
10. **Say:** [Beep] “XXXXX... (Ex. device C)” (Speak a “device tag”, an arbitrary name for the device.)
11. **Prompt:** “XXXXX... (Ex. device C) (Device tag), is this correct?”
12. **Say:** [Beep] “Yes”
13. **Prompt:** “New name saved.”

▼Security Setting

If a passcode is set, the system cannot be activated unless the passcode is input.

NOTE
Do this function only when parked. It is too distracting to attempt while driving and you may make too many errors to be effective.

Passcode setting

1. Press the pick-up button or talk button with a short press.
2. **Say:** [Beep] “Setup”
3. **Prompt:** “Select one of the following: Pairing options, confirmation prompts, language, passcode, select phone or select music player.”
4. **Say:** [Beep] “Passcode”
5. **Prompt:** “Passcode is disabled. Would you like to enable it?”
6. **Say:** [Beep] “Yes”
7. **Prompt:** “Please say a 4-digit passcode. Remember this passcode. It will be required to use this system.”
8. **Say:** [Beep] “XXXX” (Say a desired 4-digit passcode, “PCode”.)
9. **Prompt:** “Passcode XXXX (Passcode, PCode). Is this correct?”
10. **Say:** [Beep] “Yes”
11. **Prompt:** “Passcode is enabled.”

Using Bluetooth® Hands-Free with a passcode

1. Press the pick-up button or talk button with a short press.
2. **Prompt:** “Hands-Free system is locked. State the passcode to continue.”
3. **Say:** [Beep] “XXXX” (Say the set passcode “PCode”.)
4. If the correct passcode is input, voice guidance “XXXXXX... (Ex. “Mary's device”) (Device tag) is connected” is announced.
   If the passcode is incorrect, voice guidance “XXXX (4-digit passcode, Pcode) incorrect passcode, please try again” is announced.

Canceling the passcode

NOTE
Do this function only when parked. It is too distracting to attempt while driving and you may make too many errors to be effective.

1. Press the pick-up button or talk button with a short press.
2. **Say:** [Beep] “Setup”
3. **Prompt:** “Select one of the following: Pairing options, confirmation prompts, language, passcode, select phone or select music player.”
4. **Say:** [Beep] “Passcode”
5. **Prompt:** “Passcode is enabled. Would you like to disable it?”

6. **Say:** [Beep] “Yes”
7. **Prompt:** “Passcode is disabled.”

Confirmation Prompts

The confirmation prompt confirms the command content to the user before advancing to the operation requested by the user. When this function is turned on, the system reads out the voice input command previously received and confirms whether the command is correct before advancing to the command execution.
When the confirmation prompt function is turned on:
(Ex. “Calling John's device. Is this correct?”)
When the confirmation prompt function is turned off:
(Ex. “Calling John's device.”)

NOTE
If the confirmation prompt function is turned off when making an emergency call, the system reads out and confirms the command before executing it.

1. Press the pick-up button or talk button with a short press.
2. **Say:** [Beep] “Setup”
3. **Prompt:** “Select one of the following: Pairing options, confirmation prompts, language, passcode, select phone or select music player.”
4. **Say:** [Beep] “Confirmation prompts”
5. **Prompt:** “Confirmation prompts are on/off. Would you like to turn confirmation prompts off/on?”
6. **Say:** [Beep] “Yes”
7. **Prompt:** “Confirmation prompts are off/on.”

▼Voice Recognition Learning Function (Speaker Enrollment)

The voice recognition learning function enables voice recognition appropriate to the characteristics of the user's voice.
If the recognition of the voice input commands to the system is not adequate, this function can largely improve the system's voice recognition of the user. If your voice can be recognized sufficiently without using this function, you may not realize the added benefit of the function.
To register your voice, the voice input command list must be read out. Read out the list when the vehicle is parked.
Perform the registration in as quiet a place as possible (page 6-72).
The registration must be performed completely. The required time is a few minutes. The user needs to be seated in the driver's seat with the voice input command list for voice recognition learning open to the page indicated below.

When voice recognition learning is done for the first time

1. Press the pick-up button or talk button with a short press.
2. **Say:** [Beep] “Voice training”
3. **Prompt:** “This operation must be performed in a quiet environment while the vehicle is stopped. See the owner's manual for the list of required training phrases. Press and release the talk button when you are ready to begin. Press the hangup button to cancel at any time.”
4. Press the talk button with a short press.

5. The voice guidance reads out the voice input command number (refer to the voice input command list for voice recognition learning). (Ex. “Please read phrase 1”)
6. **Say:** [Beep] “0123456789” (Say the voice input command for voice recognition learning (1 to 8) according to the voice guidance.)
7. **Prompt:** “Speaker enrollment is complete.”

NOTE
If an error occurred in the voice recognition learning, re-learning can be done by pressing the talk button with a short press.

Voice recognition re-learning

If voice recognition learning has already been done.

1. Press the pick-up button or talk button with a short press.
2. **Say:** [Beep] “Voice training”
3. **Prompt:** “Enrollment is enabled/disabled. Would you like to disable/enable or retrain?”
4. **Say:** [Beep] “Retrain”
5. **Prompt:** “This operation must be performed in a quiet environment while the vehicle is stopped. See the owner's manual for the list of required training phrases. Press and release the talk button when you are ready to begin. Press the hangup button to cancel at any time.”
6. Press the talk button with a short press.
7. The voice guidance reads out the voice input command number (refer to the voice input command list for voice recognition learning). (Ex. “Please read phrase 1”)
8. **Say:** [Beep] “0123456789” (Say the voice input command for voice recognition learning (1 to 8) according to the voice guidance.)
9. **Prompt:** “Speaker enrollment is complete.”

NOTE
If an error occurred in the voice recognition learning, re-learning can be done by pressing the talk button with a short press.

Voice input command list for voice recognition learning

When reading out, the following points must be observed:

- Read out the numbers one at a time correctly and naturally.

(For example, “1234” must be read out “one, two, three, four”, not “twelve, thirty four”.)

- Do not read out parentheses. “ (” and hyphens “-” are used for separating numbers in a phone number.

Ex.
“ (888) 555-1212” must be spoken “Eight, eight, eight, five, five, five, one, two, one, two.”

Phrase	Command
1	0123456789
2	(888) 555-1212
3	Call
4	Dial
5	Setup
6	Cancel
7	Continue
8	Help

NOTE
- *The applicable phrase appears in the display.*
- *After user voice registration is completed, voice guidance "Speaker enrollment is complete" is announced.*

Voice recognition learning on/off

1. Press the pick-up button or talk button with a short press.
2. **Say:** [Beep] "Voice training"
3. **Prompt:** "Enrollment is enabled/disabled. Would you like to disable/enable or retrain?"
4. **Say:** [Beep] "Disable" or "Enable"
5. When "Disable" is spoken, the voice recognition learning is turned off. When "Enable" is spoken, the voice recognition learning is turned on.
6. **Prompt:** "Speaker Enrollment is disabled/enabled."

When Bluetooth® Hands-Free Cannot be Used

Bluetooth® Hands-Free cannot be used under the following conditions:
- The device is outside of the communication area.
- The device has a malfunction.
- The device is not connected to the hands-free unit equipped on the vehicle.
- The device's battery is weak.
- The device is turned off.
- The device is placed where radio reception is difficult.
- The ignition is switched off.

Safety Certification

FCC ID: CB2MBLUEC09 IC:279B-MBLUEC09
This device complies with Part 15 of the FCC Rules and with RSS-210 of Industry Canada. Operation is subject to the following two conditions:
(1) This device may not cause harmful interference, and
(2) This device must accept any interference received, including interference that may cause undesired operation.

⚠ WARNING

Changes or modifications not expressively approved by the party responsible for compliance could void the user's authority to operate the equipment.

The term “IC: ” before the radio certification number only signifies that Industry Canada technical specifications were met.
The antenna used for this transmitter must not be co-located or operating in conjunction with any other antenna or transmitter. End-users and installers must be provided with installation instructions and transmitter operating conditions for satisfying RF exposure compliance.

Mazda Bluetooth® Hands-Free Customer Service

- U.S.A.
  Phone: 800-430-0153 (Toll-free)
  www.MazdaUSA.com/bluetooth
- Canada
  Phone: 800-430-0153 (Toll-free)
  www.mazdahandsfree.ca
- Mexico
  Center of Attention to Client (CAC)
  Phone: 01-800-01-MAZDA (Toll-free)
  Web: www.mazdamexico.com.mx

Sunvisors

When you need a sunvisor, lower it for use in front or swing it to the side.

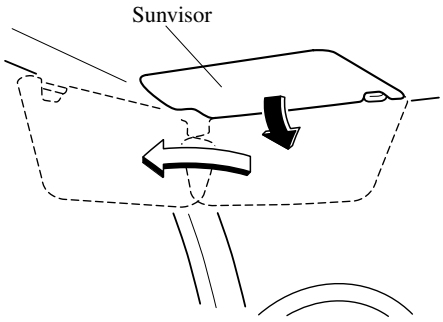

▼Vanity Mirrors

To use the vanity mirror, lower the sunvisor.

Interior Lights

▼Illuminated Entry System

When the illuminated entry system operates, the overhead light (switch is in the DOOR position) turns on for:

- About 30 seconds after the driver's door is unlocked and the ignition is switched off (with the ignition key removed).
- About 15 seconds after all doors are closed.
- About 15 seconds after the ignition is switched off (with the ignition key removed) with all doors closed.

The light also turns off when:

- The ignition is switched ON and all doors are closed.
- The driver's door is locked.

NOTE

- ***Battery saver***
  If any door is left opened, the light turns off after about 30 minutes to save the battery. The light turns on again when the ignition is switched ON, or when any door is opened after all doors have been closed.
- *The operation of the illuminated entry system can be changed.*
  Refer to Personalization Features on page 10-8.

Interior Equipment

▼Overhead Lights

Front

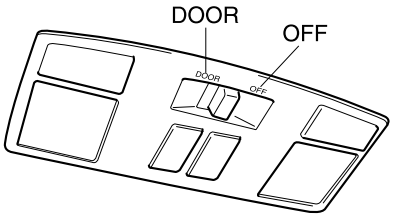

Switch Position	Front Overhead Lights
OFF	Light off
DOOR	• Light is on when any door is open • Light is on or off when the illuminated entry system is on

Rear

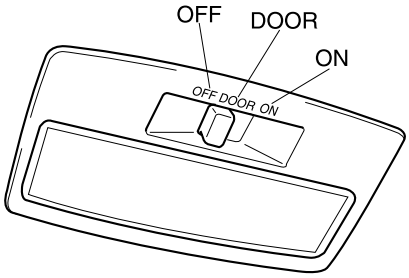

Switch Position	Rear Overhead Lights
OFF	Light off
DOOR	• Light is on when any door is open • Light is on or off when the illuminated entry system is on
ON	Light on

▼Map Lights

The map lights are switched on or off by pressing the switches.

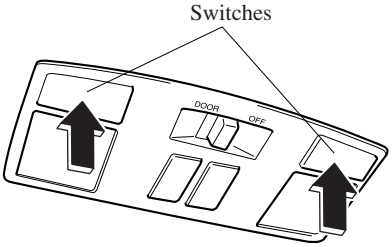

▼Luggage Compartment Light

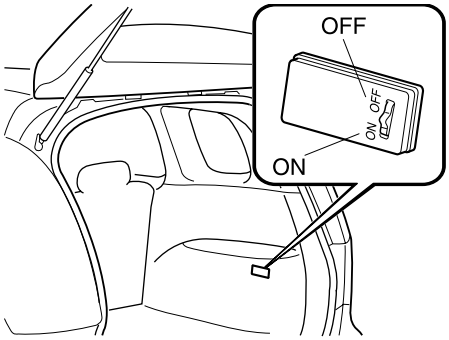

Switch Position	Luggage Compartment Light
OFF	Light off
ON	Light on when the liftgate is open

Information Display

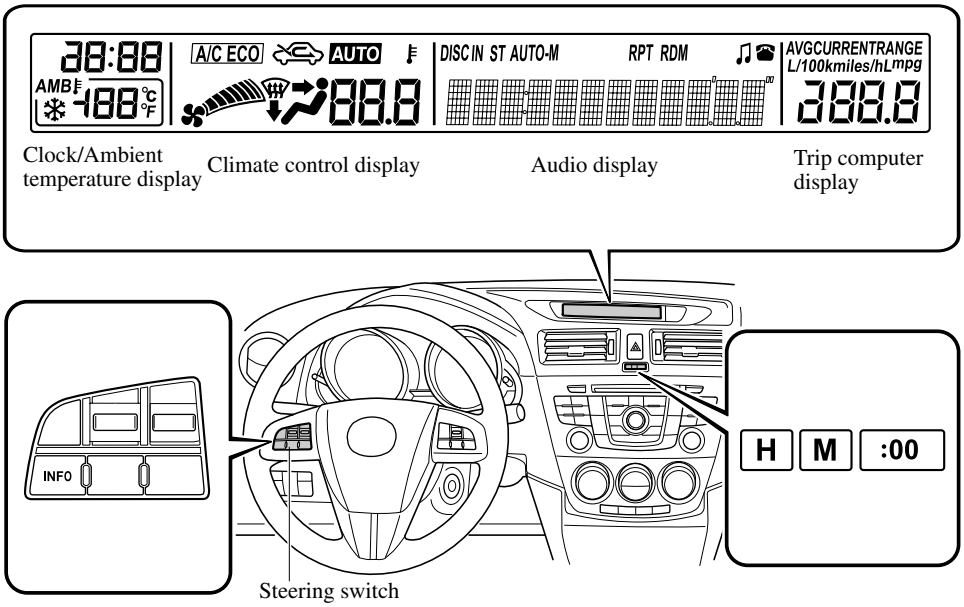

▼Information Display Functions

The information display has the following functions:

- Clock
- Ambient Temperature Display
- Climate Control Display
- Audio Display
- Trip Computer*
- Bluetooth® Hands-Free Display* Refer to Bluetooth® Hands-Free on page 6-70.

*Some models.

Interior Equipment

▼Clock

When the ignition is switched to ACC or ON, the time is displayed.

Time setting

1. Switch the ignition to ACC or ON.
2. Adjust the time using the time setting buttons (H , M).
   The hours advance while the time setting button (H) is pressed.
   The minutes advance while the time setting button (M) is pressed.

Time resetting

1. Switch the ignition to ACC or ON.
2. Press the :00 button.
3. When the button is pressed, the time will be reset as follows:

(Example)
12:01—12:29→12:00
12:30—12:59→1:00

NOTE
When the button is pressed, the seconds will start at "00".

▼Ambient Temperature Display

When the ignition is switched ON, the ambient temperature is displayed.

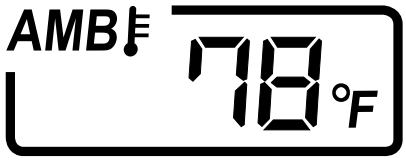

NOTE
- *Under the following conditions, the ambient temperature display may differ from the actual ambient temperature depending on the surroundings and vehicle conditions:*
  - *Significantly cold or hot temperatures.*
  - *Sudden changes in ambient temperature.*
  - *The vehicle is parked.*
  - *The vehicle is driven at low speeds.*
- *Press the AUTO switch(page 6-5) for 3 seconds or more to switch the display from Fahrenheit to Centigrade or vice versa.*

▼Climate Control Display

The climate control system status is displayed. To operate the climate control system, refer to "Climate Control System" (page 6-2).

▼Audio Display

The audio system status is displayed. To operate the audio system, refer to "Audio System" (page 6-11).

▼Trip Computer*

The trip computer can display the following:
- The current fuel economy.
- The average fuel economy.
- The approximate distance you can travel on the available fuel.
- The average vehicle speed.

Switch the ignition ON.
Press the INFO switch to change the display mode.

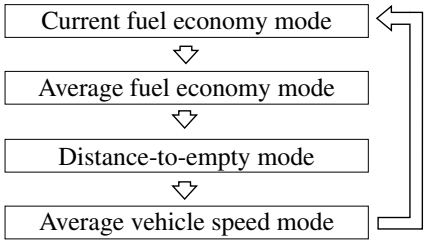

If you have any problems with your trip computer, consult an Authorized Mazda Dealer.

Current fuel economy mode

This mode displays the current fuel economy by calculating the amount of fuel consumption and the distance traveled.

Current fuel economy will be calculated and displayed every 2 seconds.

When this mode is selected, CURRENT will be displayed.
U.S.A.

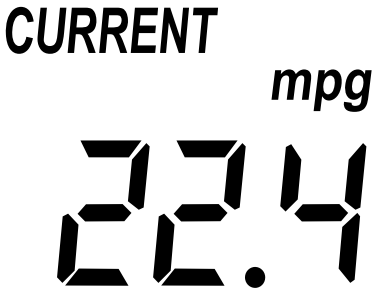

CANADA

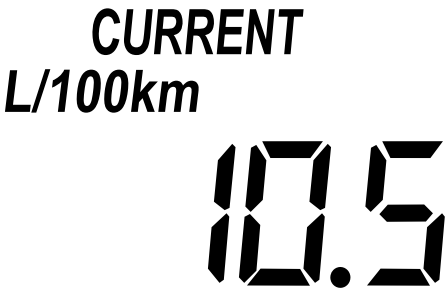

When you've slowed to about 5 km/h (3 mph), - - - L/100 km (- - -mpg) will be displayed.

*Some models.

Average fuel economy mode

This mode displays the average fuel economy by calculating the total fuel consumption and the total traveled distance since purchasing the vehicle, re-connecting the battery after disconnection, or resetting the data. The average fuel economy is calculated and displayed every minute.

When this mode is selected, AVG will be displayed.
U.S.A.

CANADA

To clear the data being displayed, press the INFO switch for more than 1.5 second.

After pressing the INFO switch, - - - L/100 km (- - - mpg) will be displayed for about 1 minute before the fuel economy is recalculated and displayed.

Distance-to-empty mode

This mode displays the approximate distance you can travel on the remaining fuel based on the fuel economy.

The distance-to-empty will be calculated and displayed every second.

When this mode is selected, RANGE will be displayed.
U.S.A.

CANADA

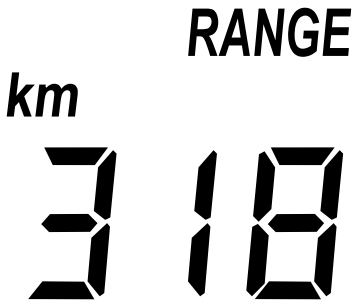

NOTE

- *Even though the distance-to-empty display may indicate a sufficient amount of remaining mileage before refueling is required, refuel as soon as possible if the fuel gauge needle nears E or the low fuel warning light illuminates.*
- *The display won't change unless you add more than approximately 5 L (6 US qt, 5 Imp qt) of fuel.*

Average vehicle speed mode

This mode displays the average vehicle speed by calculating the distance and the time traveled since connecting the battery or resetting the data.
Average vehicle speed will be calculated and displayed every 10 seconds.

When this mode is selected, AVG will be displayed.
U.S.A.

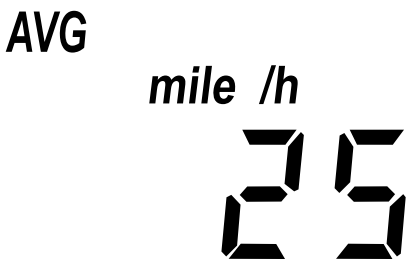

CANADA

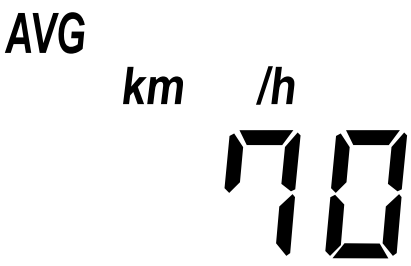

To clear the data being displayed, press the INFO switch for more than 1.5 second. After pressing the INFO switch, - - - km/h (- - - mile/h) will be displayed for about 1 minute before the vehicle speed is recalculated and displayed.

Cup Holder

⚠ WARNING

Never use a cup holder to hold hot liquids while the vehicle is moving:

Using a cup holder to hold hot liquids while the vehicle is moving is dangerous. If the contents spill, you could be scalded.

Do not put anything other than cups or drink cans in cup holders:

Putting objects other than cups or drink cans in a cup holder is dangerous.
During sudden braking or maneuvering, occupants could be hit and injured, or objects could be thrown around the vehicle, causing interference with the driver and the possibility of an accident. Only use a cup holder for cups or drink cans.

⚠ CAUTION

To reduce the possibility of injury in an accident or a sudden stop, keep cup holders closed when not in use.

▼Front

The front cup holder is in the center console.

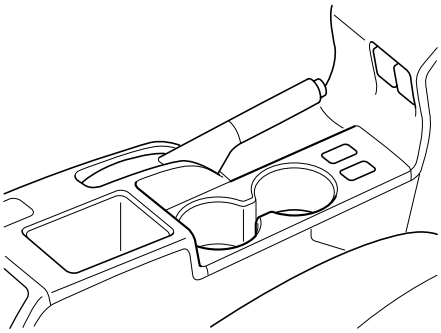

▼Rear

Second-row Seat

Storage box (Second-row right-side seat)*

To use, pull out the storage box (page 6-105).

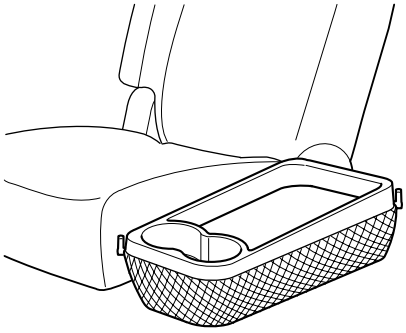

 *Some models.

Third-row seat

Two cup holders are in the side-trim on both the left and right sides.

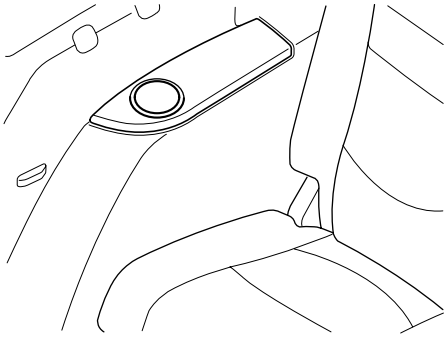

Bottle Holder

Bottle holders are on the inside of the doors.

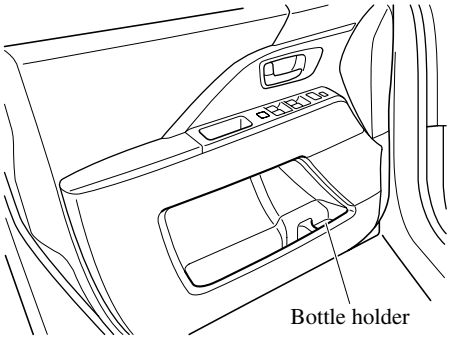

CAUTION

Do not use the bottle holders for containers without caps. The contents may spill when the door is opened or closed.

Storage Compartments

WARNING

Keep storage boxes closed when driving:

Driving with the storage boxes open is dangerous. To reduce the possibility of injury in an accident or a sudden stop, keep the storage boxes closed when driving.

Do not put articles in storage spaces with no lid:

Putting articles in storage spaces with no lid is dangerous as they could be thrown around the cabin if the vehicle is suddenly accelerated and cause injury depending on how the article is stored.

CAUTION

Do not leave lighters or eyeglasses in the storage boxes while parked under the sun. A lighter could explode or the plastic material in eyeglasses could deform and crack from high temperature.

▼Small Item Storage Spaces

⚠ WARNING

Do not place objects in the small storage spaces which can roll around easily or stick out.

Putting objects in the small item storage spaces which can roll around easily or stick out is dangerous. During emergency braking or a collision, the objects could be thrown around the cabin and cause injury.

The spaces can be used to store small items.

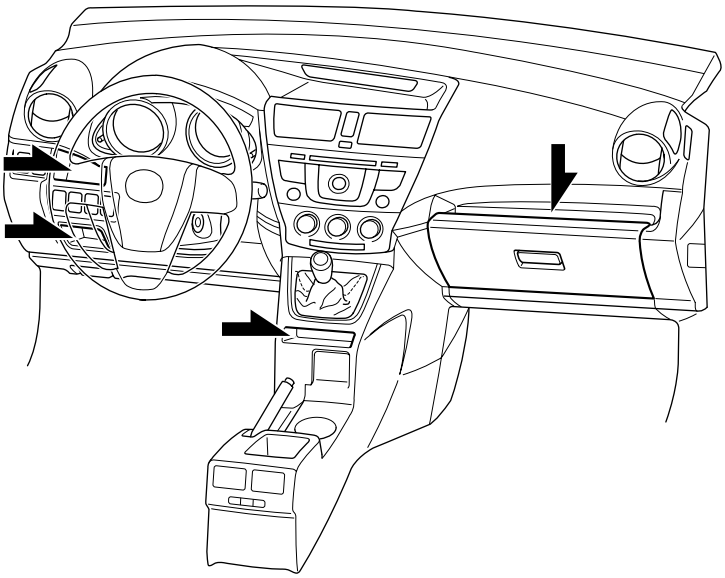

Interior Equipment

▼Glove Compartment

To open the glove compartment, pull the latch toward you.

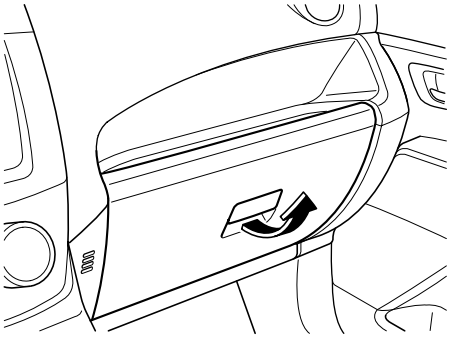

To close the glove compartment, firmly press in the center of the glove compartment lid.

▼Center Console

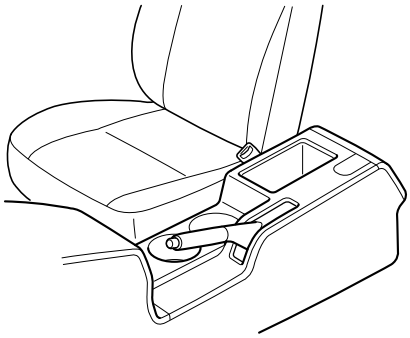

▼Underseat Storage

If your vehicle has a right second-row storage box (page 6-105), when using the storage box, small items can be stored under the both bottoms of the second-row seats.

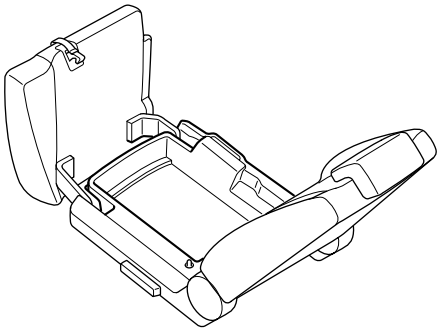

To use the under seat storage

Pull the strap and lift the seat bottom up and forward.

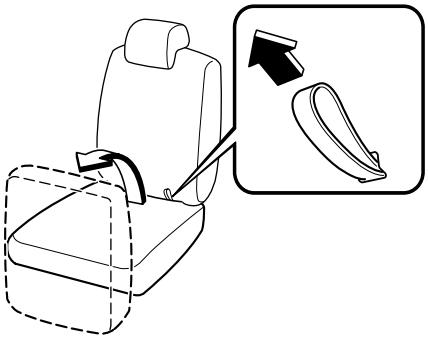

CAUTION

Do not store items above the marked line indicated in the illustration below. If the items are stored above the marked line, the seat bottom will not lock and could cause serious injury.

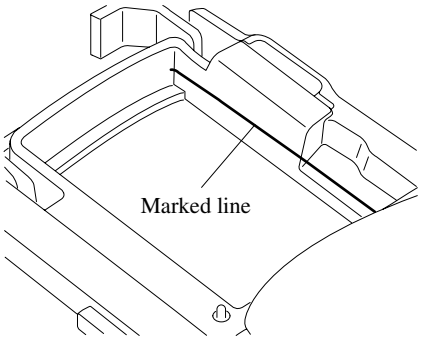

To return the seat bottom

Carefully lower the seat bottom backward until it locks in place. Attempt to lift the seat bottom to make sure it is firmly locked down.

CAUTION

When returning the seat-bottom to its upright position, make sure there is no object lodged between the seatback and the seat belt buckle. If the seat-bottom is returned to its upright position in this condition it could damage the seat belt buckle. If the seat belt buckle does not return to its position after removing the obstruction, move the buckle rearward with your hand and then lower the seat-bottom.

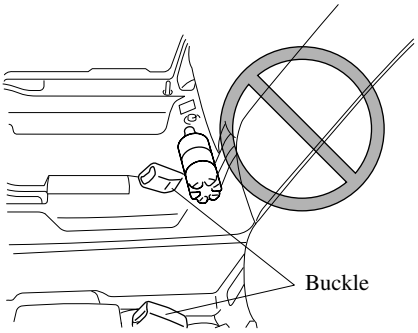

▼Storage Box*

The storage box is stowed under the bottom of the right second-row seat. Small items can be stored in this box.

*Some models.

To use the storage box

1. Pull the strap and lift the seat bottom up and forward.

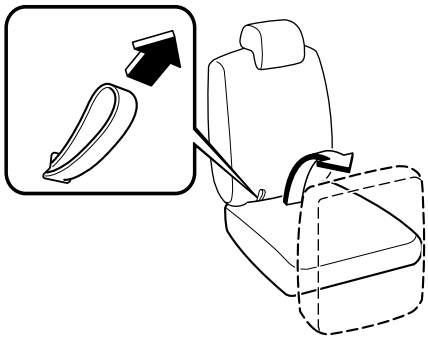

NOTE
If it is hard to lift the seat bottom, raise the reclining lever and lean back slightly.

2. Pull out the storage box.

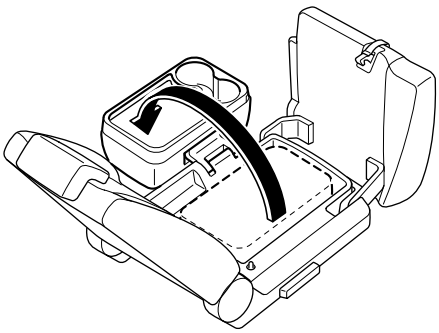

3. More items can be stowed if the cover is removed.

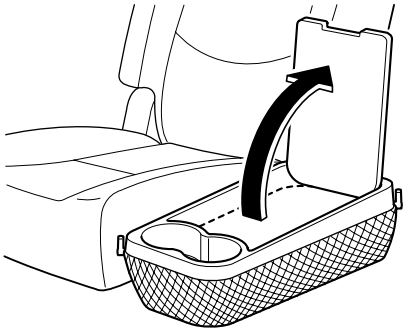

NOTE
The cover can be kept in the seatback pocket of the driver's seat.

4. Carefully lower the seat bottom backward until it locks in place. Attempt to lift the seat bottom to make sure it is firmly locked down.

To stow the storage box

1. Clean out the inside of the storage box, and then attach the cover to it.
2. Pull the strap and lift the seat bottom up and forward.
3. Make sure the underseat storage area is empty before storing it.
4. Carefully lower the seat bottom backward until it locks in place. Attempt to lift the seat bottom to make sure it is firmly locked down.

When folding the seatback of the right second-row seat, make sure the storage box is stowed. If the storage box is not stowed, it could be damaged.

CAUTION

When returning the seat-bottom to its upright position, make sure there is no object lodged between the seatback and the seat belt buckle. If the seat-bottom is returned to its upright position in this condition it could damage the seat belt buckle. If the seat belt buckle does not return to its position after removing the obstruction, move the buckle rearward with your hand and then lower the seat-bottom.

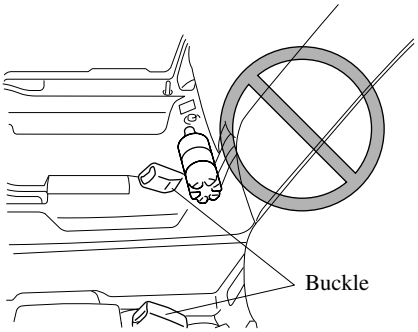

▼Cargo Securing Loops

WARNING

Make sure luggage and cargo are secured before driving:

Not securing cargo while driving is dangerous as it could move or be crushed during sudden braking or a collision and cause injury.

Use the loops in the luggage compartment to secure cargo with a rope or net. The tensile strength of the loops is 196 N (20 kgf, 44 lbf). Do not apply excessive force to the loops as it will damage them.

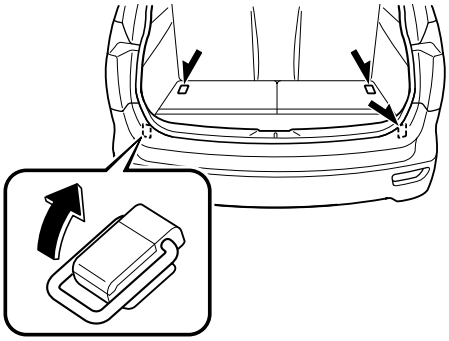

▼Cargo Sub-Compartment

Lift the cover.

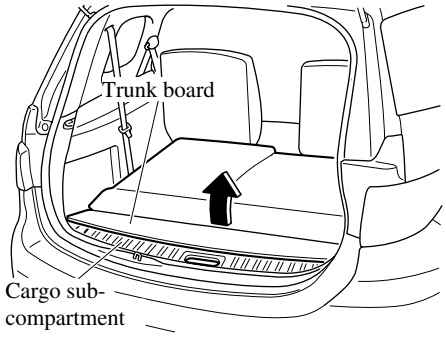

Interior Equipment

▼Rear Coat Hooks

WARNING

Never hang heavy or sharp objects on the assist grips and coat hooks:

Hanging heavy or sharp-ended objects such as a coat hanger from the assist grips or coat hooks is dangerous as they can fly off and hit an occupant in the cabin if a curtain air bag was to deploy, which could result in serious injury or death.

Always hang clothes on the coat hooks and the assist grips without hangers.

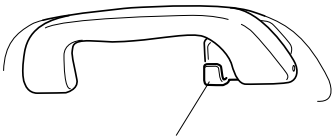

▼Luggage Compartment

A golf bag can be carried in the luggage compartment.
To place a golf bag in the luggage compartment, use the following procedure:

1. Remove the cover for the side storage space.

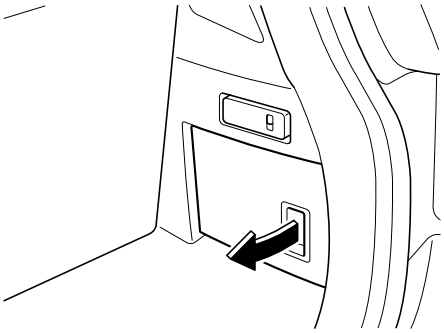

2. Insert the top of the golf bag into the side storage space.

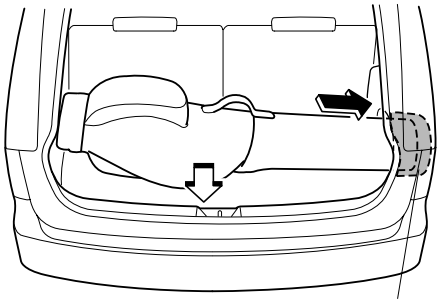

NOTE

- *Some golf bags cannot fit depending on their size.*
- *Golf bags up to nine inches in diameter can be carried.*

Accessory Sockets

Switch the ignition to ACC or ON.
Only use genuine Mazda accessories or the equivalent requiring no greater than 120 W (DC 12 V, 10 A).

Front

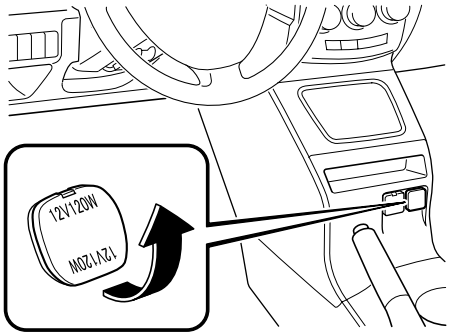

Rear

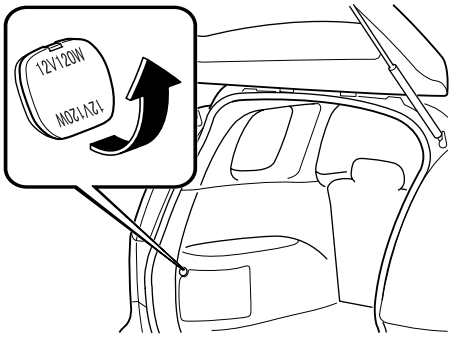

CAUTION

- *To prevent accessory socket damage or electrical failure, pay attention to the following:*
  - *Do not use accessories that require more than 120 W (DC 12 V, 10 A).*
  - *Do not use accessories that are not genuine Mazda accessories or the equivalent.*
  - *Close the cover when the accessory socket is not in use to prevent foreign objects and liquids from getting into the accessory socket.*
  - *Correctly insert the plug into the accessory socket.*
- *Noise may occur on the audio playback or TV reception depending on the device connected to the accessory socket.*
- *Depending on the device connected to the accessory socket, the vehicle's electrical system may be affected, which could cause the warning light to illuminate. Disconnect the connected device and make sure that the problem is resolved. If the problem is resolved, disconnect the device from the socket and switch the ignition off. If the problem is not resolved, consult an Authorized Mazda Dealer.*

NOTE

To prevent discharging of the battery, do not use the socket for long periods with the engine off or idling.

7 In Case of an Emergency

Helpful information on what to do in an emergency.

Parking in an Emergency 7-2
Parking in an Emergency 7-2

Flat Tire 7-3
Spare Tire and Tool Storage 7-3
Changing a Flat Tire 7-7

Overheating 7-14
Overheating 7-14

Emergency Starting 7-16
Starting a Flooded Engine 7-16
Jump-Starting 7-17
Push-Starting 7-21

Emergency Towing 7-22
Towing Description 7-22
Tiedown Hooks* 7-23
Recreational Towing 7-25

*Some models.

Parking in an Emergency

The hazard warning lights should always be used when you stop on or near a roadway in an emergency.

The hazard warning lights warn other drivers that your vehicle is a traffic hazard and that they must take extreme caution when near it.

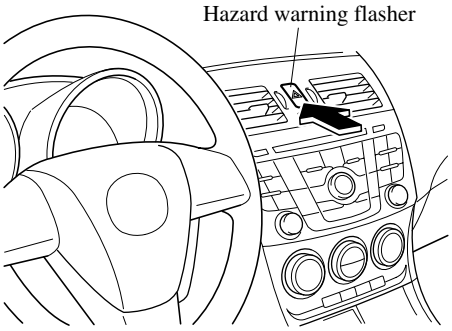

Depress the hazard warning flasher and all the turn signals will flash.

NOTE

- *The turn signals do not work when the hazard warning lights are on.*
- *Check local regulations about the use of hazard warning lights while the vehicle is being towed to verify that it is not in violation of the law.*

Spare Tire and Tool Storage

Spare tire and tools are stored in the locations illustrated in the diagram.

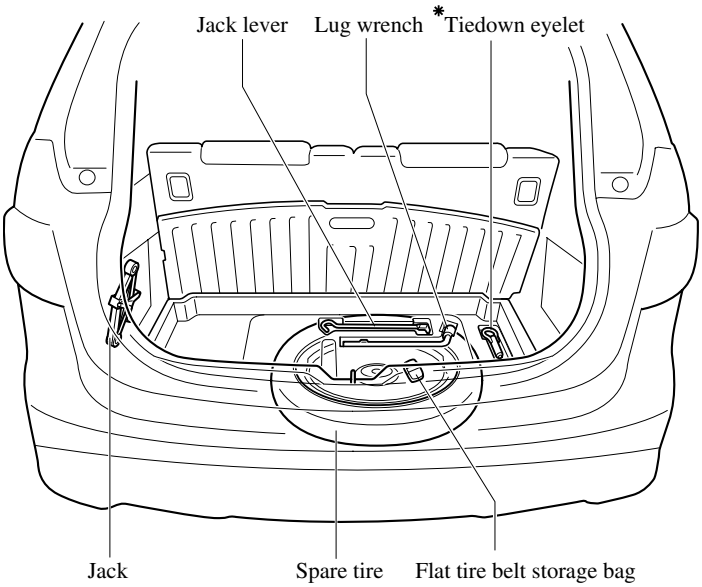

*Some models.

Flat Tire

▼Jack

To remove the jack

1. Remove the cover.

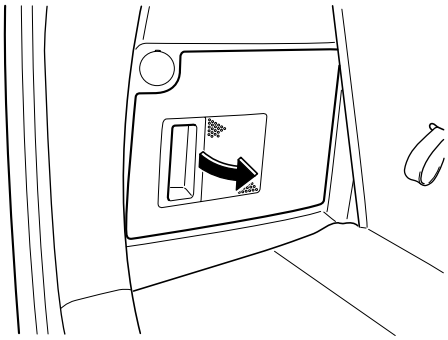

2. Turn the wing bolt and jack screw counterclockwise.

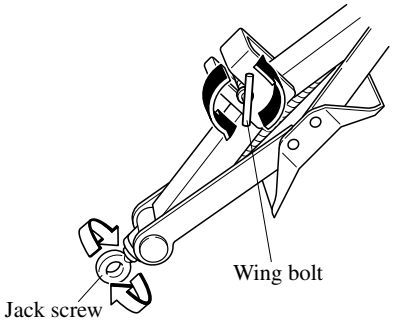

To secure the jack

1. Insert the wing bolt into the jack with the jack screw pointing down and turn the wing bolt clockwise to temporarily tighten it.
2. Turn the jack screw in the direction shown in the figure.

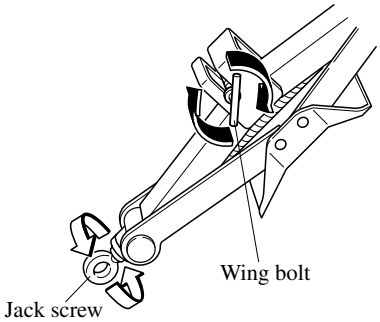

3. Turn the wing bolt completely to secure the jack.

NOTE
If the jack is not completely secured, it could rattle while driving. Make sure the jack screw is sufficiently tightened.

Maintenance

- Always keep the jack clean.
- Make sure the moving parts are kept free from dirt or rust.
- Make sure the screw thread is adequately lubricated.

▼Spare Tire

The temporary spare tire is lighter and smaller than a conventional tire, and is designed only for emergency use and should be used only for VERY short periods. Temporary spare tires should NEVER be used for long drives or extended periods.

⚠ WARNING

Do not install the temporary spare tire on the front wheels (driving wheels):

Driving with the temporary spare tire on one of the front driving wheels is dangerous. Handling will be affected. You could lose control of the vehicle, especially on ice or snow bound roads, and have an accident. Move a regular tire to the front wheel and install the temporary spare tire to the rear.

⚠ CAUTION

- *When using the temporary spare tire, driving stability may decrease compared to when using only the conventional tire.*
  Drive carefully.
- *To avoid damage to the temporary spare tire or to the vehicle, observe the following precautions:*
  - *Do not exceed 80 km/h (50 mph).*
  - *Avoid driving over obstacles. Also, do not drive through an automatic car wash. This tire's diameter is smaller than a conventional tire, so the ground clearance is reduced.*
  - *Do not use a tire chain on this tire because it won't fit properly.*
  - *Do not use your temporary spare tire on any other vehicle; it has been designed only for your Mazda.*
  - *Use only one temporary spare tire on your vehicle at the same time.*

NOTE

(With Tire Pressure Monitoring System)

A tire pressure sensor is not installed to the temporary spare tire. The warning light will flash continuously while the temporary spare tire is being used (page 5-30).

To remove the spare tire

1. Fold the third-row seat forward (page 2-10).

Flat Tire

2. Open and fold back the trunk board over the third-row seatback.

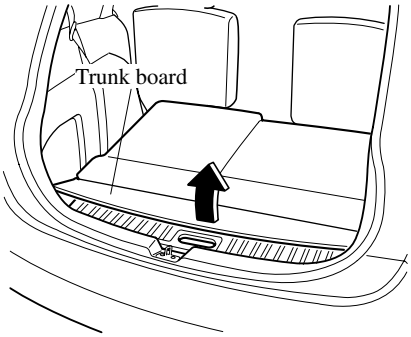

3. Remove the cargo sub-compartment.

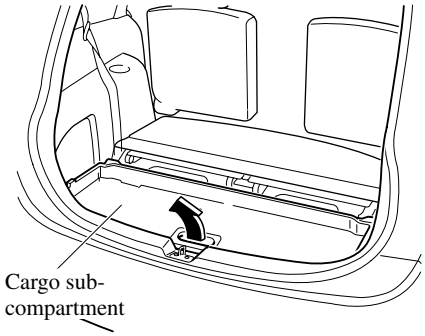

4. Turn the tire hold-down bolt counterclockwise with the lug wrench.

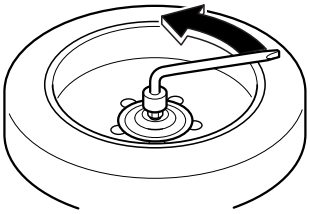

To secure the spare tire

Perform the removal procedure in reverse.

Changing a Flat Tire

NOTE
If the following occurs while driving, it could indicate a flat tire.
- *Steering becomes difficult.*
- *The vehicle begins to vibrate excessively.*
- *The vehicle pulls in one direction.*

If you have a flat tire, drive slowly to a level spot that is well off the road and out of the way of traffic to change the tire. Stopping in traffic or on the shoulder of a busy road is dangerous.

WARNING

Be sure to follow the directions for changing a tire:
Changing a tire is dangerous if not done properly. The vehicle can slip off the jack and seriously injure someone.
No person should place any portion of their body under a vehicle that is supported by a jack.

Never allow anyone inside a vehicle supported by a jack:
Allowing someone to remain in a vehicle supported by a jack is dangerous. The occupant could cause the vehicle to fall resulting in serious injury.

CAUTION

(With Tire Pressure Monitoring System)
The wheels equipped on your Mazda are specially designed for installation of the tire pressure sensors. Do not use non-genuine wheels, otherwise it may not be possible to install the tire pressure sensors.

NOTE
- *Make sure the jack is well lubricated before using it.*

(With Tire Pressure Monitoring System)
- *Be sure to register the tire pressure sensor ID signal code whenever tires or wheels are changed (page 5-32).*

1. Park on a level surface off the right-of-way and firmly set the parking brake.
2. Put a vehicle with an automatic transaxle in Park (P), a manual transaxle in Reverse (R) or 1, and turn off the engine.
3. Turn on the hazard warning flasher.
4. Have everyone get out of the vehicle and away from the vehicle and traffic.
5. Remove the jack, tool, and spare tire (page 7-3).
6. Block the wheel diagonally opposite the flat tire. When blocking a wheel, place a tire block both in front and behind the tire.

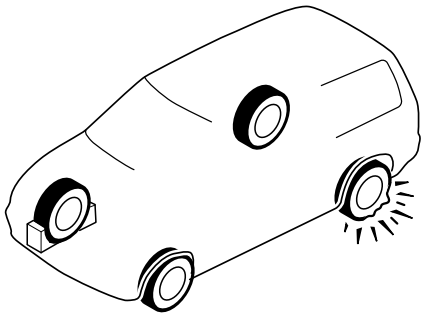

NOTE
When blocking a tire, use rocks or wood blocks of sufficient size if possible to hold the tire in place.

Flat Tire

▼Removing a Flat Tire

1. Loosen the lug nuts by turning them counterclockwise one turn each, but do not remove any lug nuts until the tire has been raised off the ground.

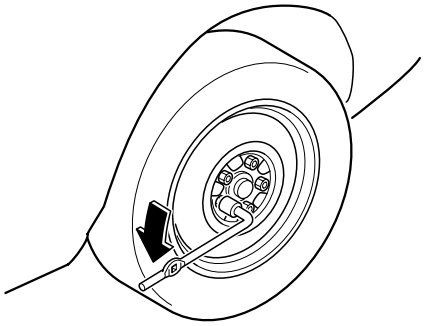

2. Place the jack on the ground.
3. Turn the jack screw in the direction shown in the figure and adjust the jack head so that it is close to the jack-up position.

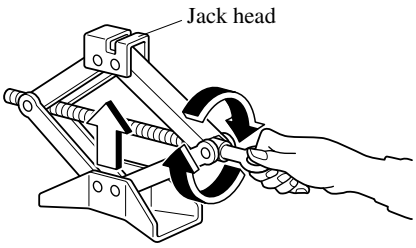

4. Place the jack under the jack-up position closest to the tire being changed with the jack head squarely under the jack-up point.

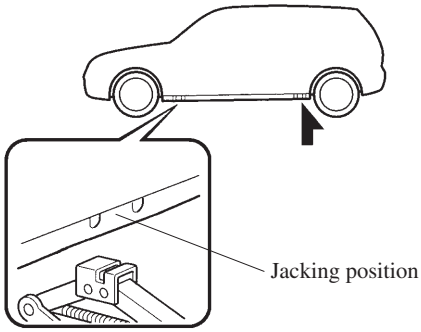

5. Continue raising the jack head gradually by rotating the screw with your hand until the jack head is inserted into the jack-up position.

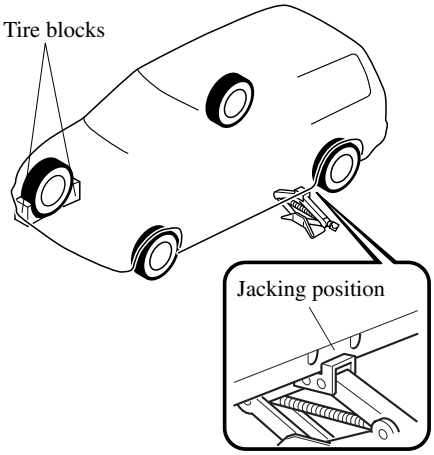

WARNING

Use only the front and rear jacking positions recommended in this manual:

Attempting to jack the vehicle in positions other than those recommended in this manual is dangerous. The vehicle could slip off the jack and seriously injure or even kill someone. Use only the front and rear jacking positions recommended in this manual.

Do not jack up the vehicle in a position other than the designated jack-up position or place any objects on or under the jack:

Jacking up the vehicle in a position other than the designated jack-up position or placing objects on or under the jack is dangerous as it could deform the vehicle body or the vehicle could fall off the jack resulting in an accident.

Use only the jack provided with your Mazda:

Using a jack that is not designed for your Mazda is dangerous. The vehicle could slip off the jack and seriously injure someone.

Never place objects under the jack:

Jacking the vehicle with an object under the jack is dangerous. The jack could slip and someone could be seriously injured by the jack or the falling vehicle.

6. Insert the jack lever and attach the lug wrench to tire jack.

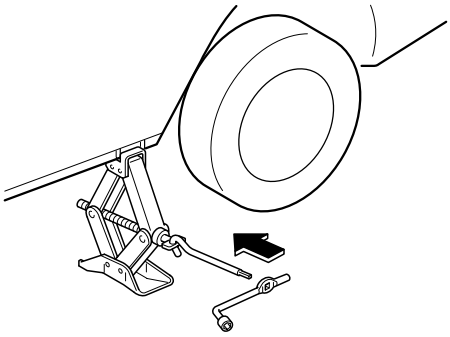

7. Turn the lug wrench clockwise and raise the vehicle high enough so that the spare tire can be installed. Before removing the lug nuts, make sure your Mazda is firmly in position and that it cannot slip or move.

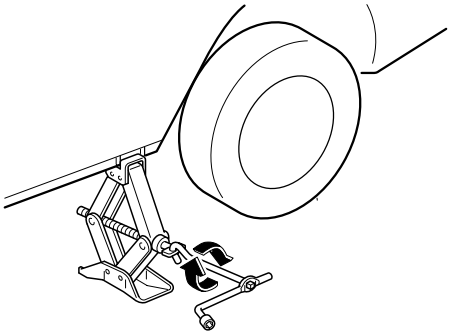

Flat Tire

⚠ WARNING

Do not jack up the vehicle higher than is necessary:

Jacking up the vehicle higher than is necessary is dangerous as it could destabilize the vehicle resulting in an accident.

Do not start the engine or shake the vehicle while it is jacked up:

Starting the engine or shaking the vehicle while it is jacked up is dangerous as it could cause the vehicle to fall off the jack resulting in an accident.

Never go under the vehicle while it is jacked up:

Going under the vehicle while it is jacked up is dangerous as it could result in death or serious injury if the vehicle were to fall off the jack.

8. Remove the lug nuts by turning them counterclockwise; then remove the wheel.

▼Locking Lug Nuts*

If your vehicle has Mazda optional antitheft wheel lug nuts, one on each wheel will lock the tires and you must use a special key to unlock them. This key will attach to the lug wrench and can be stored with the spare tire. Register them with the lock manufacturer by filling out the card provided in the glove compartment and mailing it in the accompanying envelope. If you lose this key, consult an Authorized Mazda Dealer or use the lock manufacturer's order form, which is with the registration card.

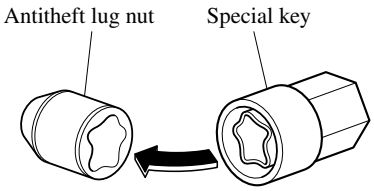

To remove an antitheft lug nut

1. Obtain the special key for the antitheft lug nut.
2. Place the special key on top of the antitheft lug nut, and be sure to hold the key square to it. If you hold the key at an angle, you may damage both key and nut. Do not use a power impact wrench.
3. Place the lug wrench on top of the key and apply pressure. Turn the wrench counterclockwise.

 *Some models.

To install the antitheft lug nut

1. Place the special key on top of the nut, and be sure to hold the key square to it. If you hold the key at an angle, you may damage both key and nut. Do not use a power impact wrench.
2. Place the lug wrench on top of the special key, apply pressure, and turn it clockwise.

Nut tightening torque	
N·m (kgf·m, ft·lbf)	88—118 (9—12, 65—87)

▼Mounting the Spare Tire

1. Remove dirt and grime from the mounting surfaces of the wheel and hub, including the hub bolts, with a cloth.

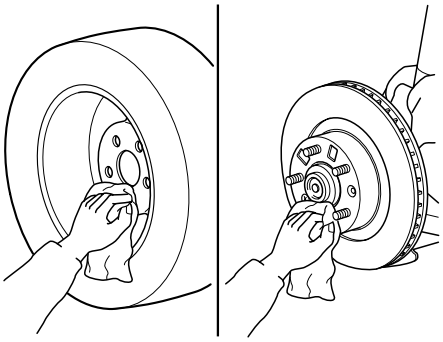

⚠ WARNING

Make sure the mounting surfaces of the wheel, hub and lug nuts are clean before changing or replacing tires:

When changing or replacing a tire, not removing dirt and grime from the mounting surfaces of the wheel, hub and hub bolts is dangerous. The lug nuts could loosen while driving and cause the tire to come off, resulting in an accident.

2. Mount the spare tire.
3. Install the lug nuts with the beveled edge inward; tighten them by hand.

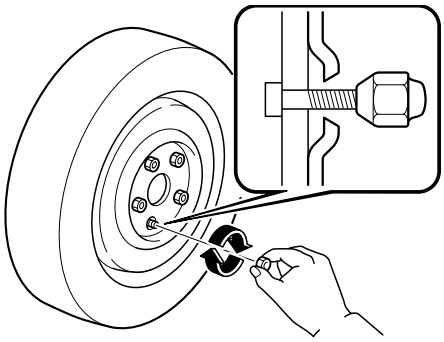

⚠ WARNING

Do not apply oil or grease to lug nuts and bolts and do not tighten the lug nuts beyond the recommended tightening torque:

Applying oil or grease to lug nuts and bolts is dangerous. The lug nuts could loosen while driving and cause the tire to come off, resulting in an accident. In addition, lug nuts and bolts could be damaged if tightened more than necessary.

Flat Tire

4. Turn the lug wrench counterclockwise and lower the vehicle. Use the lug wrench to tighten the nuts in the order shown.

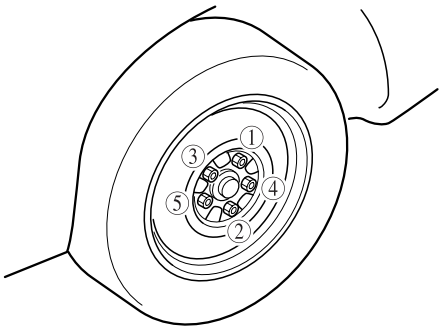

If you are unsure of how tight the nuts should be, have them inspected at an Authorized Mazda Dealer.

Nut tightening torque	
N·m (kgf·m, ft·lbf)	88—118 (9—12, 65—87)

WARNING

Always securely and correctly tighten the lug nuts:

Improperly or loosely tightened lug nuts are dangerous. The wheel could wobble or come off. This could result in loss of vehicle control and cause a serious accident.

Be sure to reinstall the same nuts you removed or replace them with metric nuts of the same configuration:

Because the wheel studs and lug nuts on your Mazda have metric threads, using a non-metric nut is dangerous. On a metric stud, it would not secure the wheel and would damage the stud, which could cause the wheel to slip off and cause an accident.

5. Replace the cargo sub-compartment.

6. Remove the lid by pressing the two latches on the cargo sub-compartment.

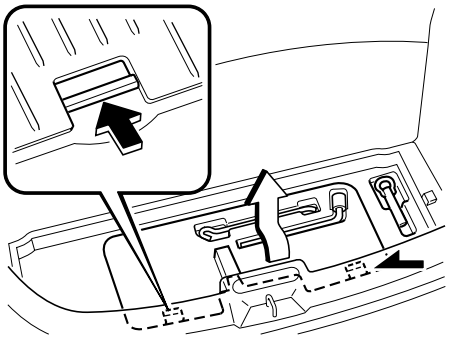

7. Remove the belt for securing the flat tire.

8. Return the third-row seatback to its original position.
   Refer to Folding the Third-Row Seat on page 2-10.

9. Place the flat tire in the cargo sub-compartment.

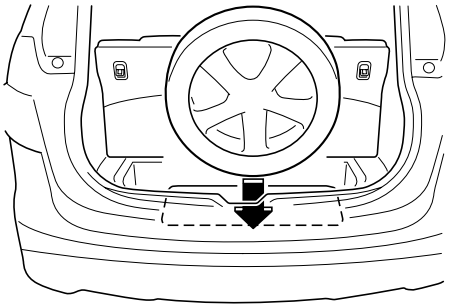

10. Thread the belt through the wheel as shown in the figure, then attach the belt clips to the cargo securing loops on the back of the third-row seat.

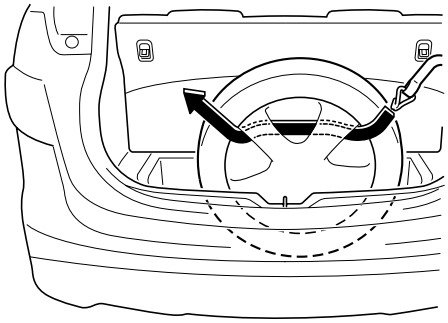

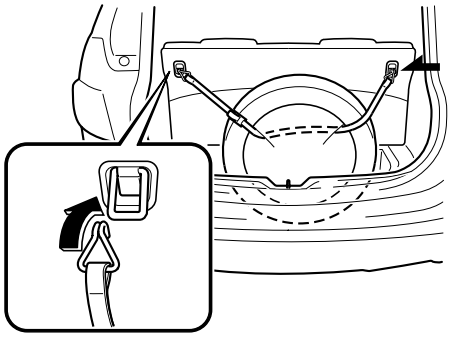

11. Pull the belt end to secure the flat tire.

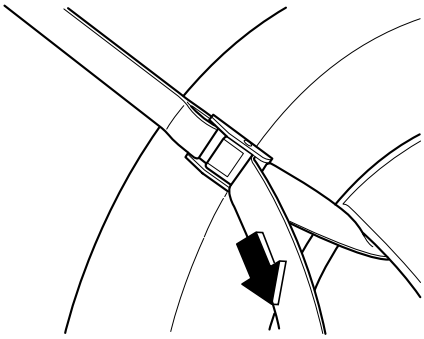

12. Remove the tire blocks and store the tools and jack.

13. Check the tire inflation pressure. Refer to Tires on page 10-6.

14. Have the flat tire repaired or replaced as soon as possible.

WARNING

Do not drive with any tires that have incorrect air pressure:

Driving on tires with incorrect air pressure is dangerous. Tires with incorrect pressure could affect handling and result in an accident. When you check the regular tires' air pressure, check the spare tire, too.

NOTE

(With Tire Pressure Monitoring System)

A tire pressure sensor is not installed to the temporary spare tire. The warning light will flash continuously while the temporary spare tire is being used (page 5-30).

NOTE

To prevent the jack and tool from rattling, store them properly.

Overheating

If the High engine coolant temperature warning light illuminates, the vehicle loses power, or you hear a loud knocking or pinging noise, the engine is probably too hot.

WARNING

Switch the ignition to off and make sure the fan is not running before attempting to work near the cooling fan:

Working near the cooling fan when it is running is dangerous. The fan could continue running indefinitely even if the engine has stopped and the engine compartment temperature is high. You could be hit by the fan and seriously injured.

Do not remove either cooling system caps when the engine and radiator are hot:

When the engine and radiator are hot, scalding coolant and steam may shoot out under pressure and cause serious injury.

Open the hood ONLY after steam is no longer escaping from the engine:

Steam from an overheated engine is dangerous. The escaping steam could seriously burn you.

If the High engine coolant temperature warning light illuminates:

1. Drive safely to the side of the road and park off the right-of-way.
2. Put a vehicle with an automatic transaxle in park (P), a manual transaxle in neutral.
3. Apply the parking brake.
4. Turn off the air conditioner.
5. Check whether coolant or steam is escaping from under the hood or from the engine compartment.

   If steam is coming from the engine compartment:
   Do not go near the front of the vehicle.
   Stop the engine.
   Wait until the steam dissipates, then open the hood and start the engine.

   If neither coolant nor steam is escaping:
   Open the hood and idle the engine until it cools.

CAUTION

If the cooling fan does not operate while the engine is running, the engine temperature will increase. Stop the engine and call an Authorized Mazda Dealer.

6. Make sure the cooling fan is operating, then turn off the engine after the temperature has decreased.
7. When cool, check the coolant reservoir level.
   If it's low, look for coolant leaks from the radiator and hoses.

If you find a leak or other damage, or if coolant is still leaking:
Stop the engine and call an Authorized Mazda Dealer.

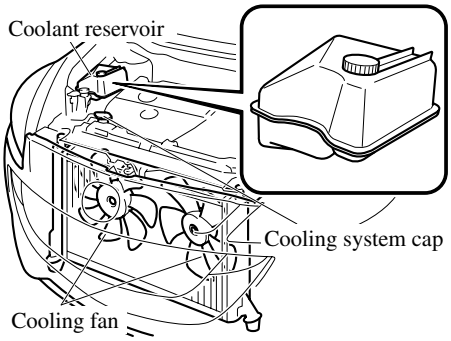

If you find no problems, the engine is cool, and no leaks are obvious:
Carefully add coolant as required (page 8-22).

⚠ CAUTION

If the engine continues to overheat or frequently overheats, have the cooling system inspected. The engine could be seriously damaged unless repairs are made. Consult an Authorized Mazda Dealer.

Starting a Flooded Engine

If the engine fails to start, it may be flooded (excessive fuel in the engine).

Follow this procedure:

1. If the engine does not start within five seconds on the first try, switch the ignition off, wait ten seconds and try again.
2. Make sure the parking brake is on.
3. Depress the accelerator all the way and hold it there.
4. Depress the clutch pedal (Manual transaxle) or the brake pedal (Automatic transaxle).
5. Switch the ignition to START and hold it there—for up to ten seconds. If the engine starts, release the key and accelerator immediately because the engine will suddenly rev up.
6. If the engine fails to start, crank it without depressing the accelerator—for up to ten seconds.

If the engine still does not start using the above procedure, have your vehicle inspected by an Authorized Mazda Dealer.

Jump-Starting

Jump-starting is dangerous if done incorrectly. So follow the procedure carefully. If you feel unsure about jump-starting, we strongly recommend that you have a competent service technician do the work.

WARNING

Follow These Precautions Carefully:
To ensure safe and correct handling of the battery, read the following precautions carefully before using the battery or inspecting it.

Always wear eye protection when working near the battery:
Working without eye protection is dangerous. Battery fluid contains SULFURIC ACID which could cause blindness if splashed into your eyes. Also, hydrogen gas produced during normal battery operation, could ignite and cause the battery to explode.

Wear eye protection and protective gloves to prevent contact with battery fluid:
Spilled battery fluid is dangerous.
Battery fluid contains SULFURIC ACID which could cause serious injuries if it gets in eyes, skin or clothing. If this happens, immediately flush your eyes with water for 15 minutes or wash your skin thoroughly and get medical attention.

Always keep batteries out of the reach of children:
Allowing children to play near batteries is dangerous. Battery fluid could cause serious injuries if it gets in the eyes or on the skin.

Do not allow the positive (+) terminal to contact any other metal object that could cause sparks:
Flames and sparks near open battery cells are dangerous. Hydrogen gas, produced during normal battery operation, could ignite and cause the battery to explode. An exploding battery can cause serious burns and injuries. When working near a battery, do not allow metal tools to contact the positive (+) or negative (–) terminal of the battery.

Emergency Starting

Keep all flames, including cigarettes, and sparks away from open battery cells:
Flames and sparks near open battery cells are dangerous. Hydrogen gas, produced during normal battery operation, could ignite and cause the battery to explode. An exploding battery can cause serious burns and injuries.

Do not jump-start a frozen battery or one with a low fluid level:
Jump-starting a frozen battery or one with a low fluid level is dangerous. It may rupture or explode, causing serious injury.

Connect the negative cable to a good ground point away from the battery:
Connecting the end of the second jumper cable to the negative (−) terminal of the discharged battery is dangerous.
A spark could cause the gas around the battery to explode and injure someone.

Route the jumper cables away from parts that will be moving:
Connecting a jumper cable near or to moving parts (cooling fans, belts) is dangerous. The cable could get caught when the engine starts and cause serious injury.

CAUTION

Use only a 12 V booster system. You can damage a 12 V starter, ignition system, and other electrical parts beyond repair with a 24 V power supply (two 12 V batteries in series or a 24 V motor generator set).

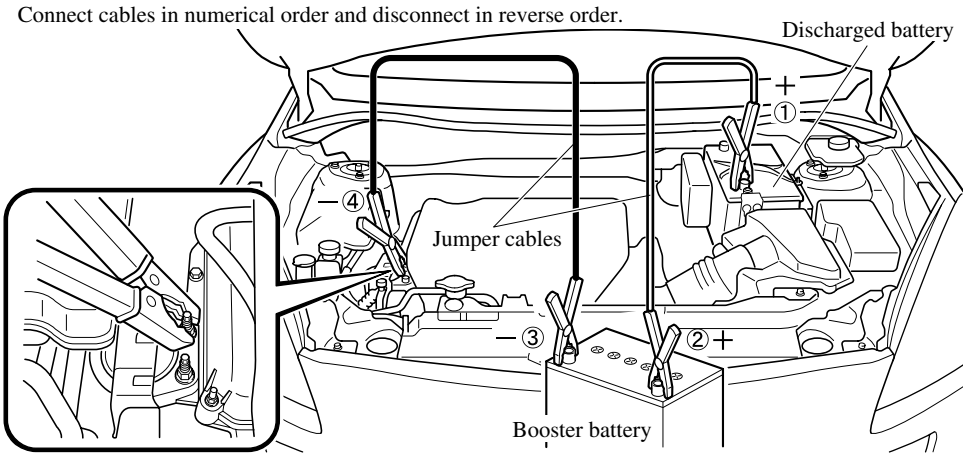

1. Remove the battery cover from its front side.

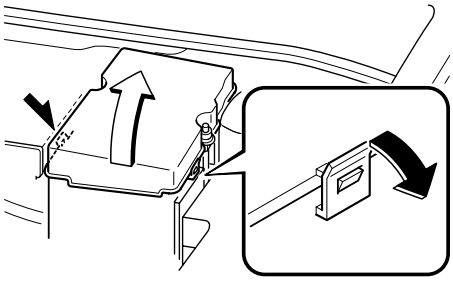

CAUTION

➢ *Do not use a tool which applies excessive force such as a screwdriver or pliers.*
If excessive force is applied to the clips, they could be damaged.
To prevent damaging the battery cover, remove/install the battery cover using the following procedure.

Removing battery cover

1 *Detach the clip facing the side of the vehicle first and pull it outward with your finger approx. 4 mm (0.2 in). Then, lift the cover slightly to clear the lock.*

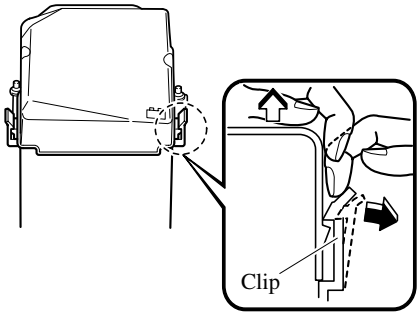

2 *Detach the clip facing the vehicle interior first and pull it outward with your finger approx. 4 mm (0.2 in). Then, lift the cover slightly to clear the lock.*

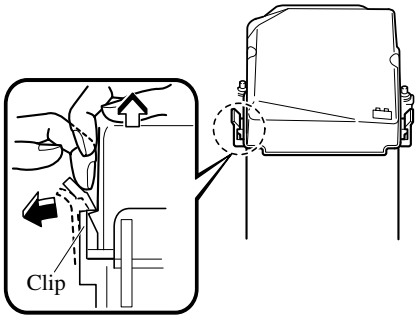

Emergency Starting

3 *Pull out the battery cover being careful not to allow it to contact the cowl grille.*

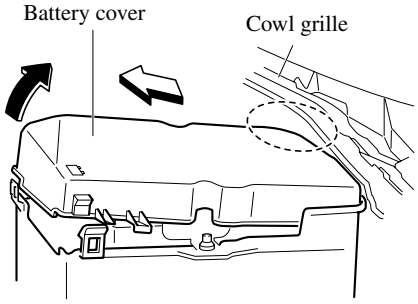

Installing battery cover

1 *Being careful not to contact the cowl grille, insert the tabs on the one end of the battery cover into the holes of the battery tray and engage the tabs.*

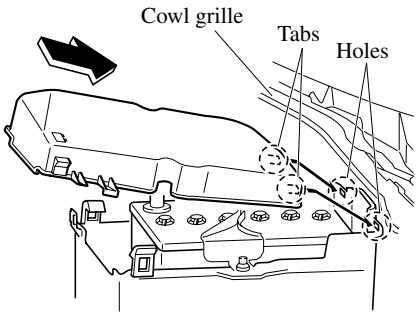

2 *Attach the clips on both sides of the battery cover.*

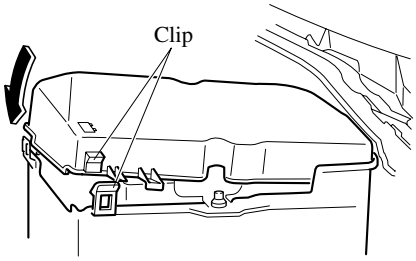

2. Make sure the booster battery is 12 V and that its negative terminal is grounded.
3. If the booster battery is in another vehicle, don't allow both vehicles to touch. Turn off the engine of the vehicle with the booster battery and all unnecessary electrical loads in both vehicles.
4. Connect the jumper cables in the exact sequence as in the illustration.
   - Connect one end of a cable to the positive terminal on the discharged battery (1).
   - Attach the other end to the positive terminal on the booster battery (2).
   - Connect one end of the other cable to the negative terminal of the booster battery (3).
   - Connect the other end to the ground point indicated in the illustration away from the discharged battery (4).
5. Start the engine of the booster vehicle and run it a few minutes. Then start the engine of the other vehicle.

6. When finished, carefully disconnect the cables in the reverse order described in the illustration.

NOTE
Verify that the covers are securely installed.

Push-Starting

Do not push-start your Mazda.

WARNING

Never tow a vehicle to start it:
Towing a vehicle to start it is dangerous. The vehicle being towed could surge forward when its engine starts, causing the two vehicles to collide. The occupants could be injured.

CAUTION

Do not push-start a vehicle that has a manual transaxle. It can damage the emission control system.

NOTE
You can't start a vehicle with an automatic transaxle by pushing it.

Emergency Towing

Towing Description

We recommend that towing be done only by an Authorized Mazda Dealer or a commercial tow-truck service.

Proper lifting and towing are necessary to prevent damage to the vehicle. Government and local laws must be followed.

A towed vehicle usually should have its drive wheels (front wheels) off the ground. If excessive damage or other conditions prevent this, use wheel dollies.

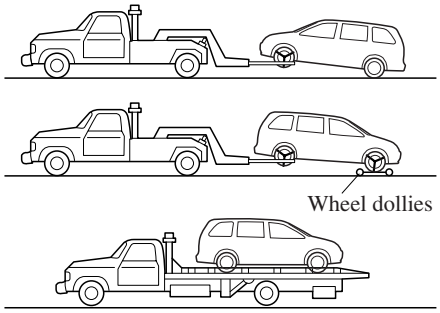

When towing with the rear wheels on the ground, release the parking brake.

⚠ CAUTION

Do not tow the vehicle pointed backward with driving wheels on the ground. This may cause internal damage to the transaxle.

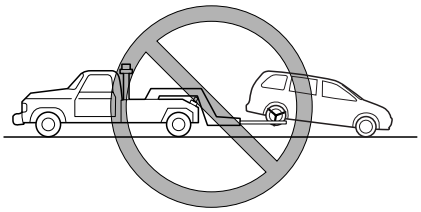

⚠ CAUTION

Do not tow with sling-type equipment. This could damage your vehicle. Use wheel-lift or flatbed equipment.

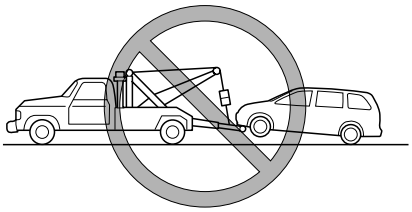

Tiedown Hooks*

CAUTION

Do not use the front and rear tiedown eyelets for towing the vehicle.
They have been designed only for securing the vehicle to a transport vessel during shipping.
Using the eyelets for any other purpose could result in the vehicle being damaged.

▼Tiedown Hook-Front

1. Remove the tiedown eyelet and the lug wrench from the trunk (page 7-3).
2. Press the marking on the cover as shown in the figure to remove the cover.

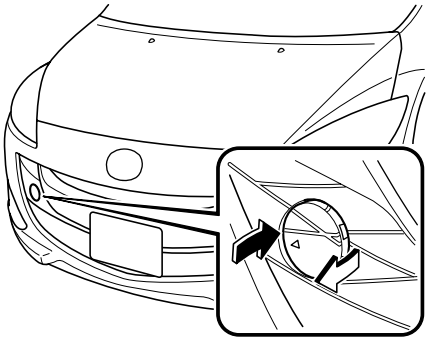

CAUTION

The cap cannot be completely removed. Do not use excessive force as it may damage the cap or scratch the painted bumper surface.

NOTE

If it is difficult to remove the tiedown eyelet, wrap the jack lever with a cloth as shown in the figure and press the marking on the cover to remove it.

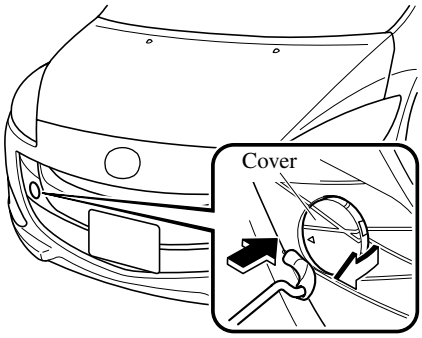

3. Securely install the tiedown eyelet using the lug wrench.

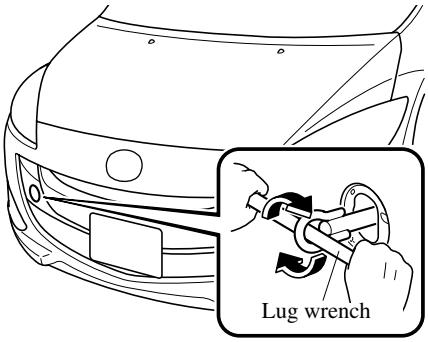

*Some models.

Emergency Towing

4. Hook the tying rope to the tiedown eyelet.

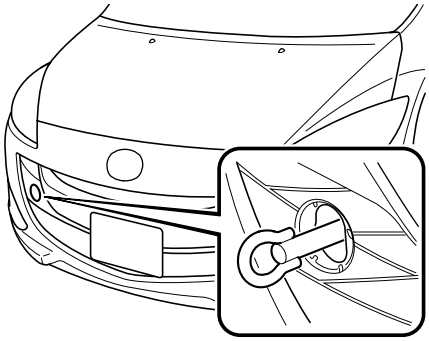

CAUTION

If the tiedown eyelet is not securely tightened, it may loosen or disengage from the bumper when tying down the vehicle. Make sure that the tiedown eyelet is securely tightened to the bumper.

▼Tiedown Hooks-Rear

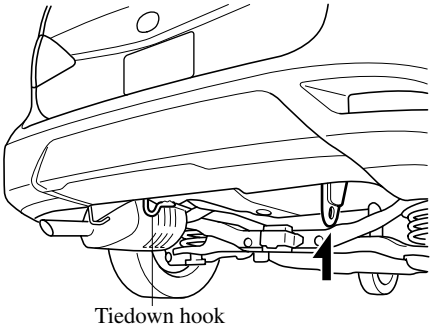

CAUTION

The rear tiedown hook is designed only for lashing the vehicle during overseas transport. Do not use the rear tiedown hook for any other use such as transporting the vehicle on trucks or railway.

Recreational Towing

An example of “recreational towing” is towing your vehicle behind a motorhome. The transaxle is not designed for towing this vehicle on all 4 wheels.
When doing recreational towing refer to “Towing Description” (page 7-22) and “Tiedown Hook” (page 7-23) and carefully follow the instructions.

8 Maintenance and Care

How to keep your Mazda in top condition.

Introduction 8-2
Introduction 8-2

Scheduled Maintenance 8-4
Scheduled Maintenance (USA, Canada, and Puerto Rico) 8-4
Scheduled Maintenance (Mexico) 8-9

Owner Maintenance 8-16
Owner Maintenance Schedule 8-16
Owner Maintenance Precautions 8-17
Engine Compartment Overview 8-19
Engine Oil 8-20
Engine Coolant 8-22
Brake/Clutch Fluid 8-24
Power Steering Fluid 8-24
Automatic Transaxle Fluid (ATF)* 8-25
Washer Fluid 8-26
Body Lubrication 8-27
Wiper Blades 8-28
Battery 8-32
Tires 8-36
Light Bulbs 8-42
Fuses 8-50

Appearance Care 8-56
How to Minimize Environmental Paint Damage 8-56
Exterior Care 8-58
Interior Care 8-63

*Some models.

Introduction

Be extremely careful and prevent injury to yourself and others or damage to your vehicle when using this manual for inspection and maintenance.

If you are unsure about any procedure it describes, we strongly urge you to have a reliable and qualified service shop perform the work, preferably an Authorized Mazda Dealer.

Factory-trained Mazda technicians and genuine Mazda parts are best for your vehicle. Without this expertise and the parts that have been designed and made especially for your Mazda, inadequate, incomplete, and insufficient servicing may result in problems. This could lead to vehicle damage or an accident and injuries.

For expert advice and quality service, consult an Authorized Mazda Dealer.

To continue warranty eligibility and to protect your investment, it is your responsibility to properly maintain your vehicle according to factory recommended schedules outlined in this manual. As part of this you must keep your maintenance records, receipts, repair orders and any other documents as evidence this maintenance was performed. You must present these documents, should any warranty coverage disagreement occur. Failure to do so can result in your warranty being voided either in whole or in part.

This evidence may consist of the following:
- The Mazda Scheduled Maintenance Record, refer to the Warranty Booklet, must be completely filled out showing mileage, repair order number, date for each service, and signed by a qualified automotive service technician who service vehicles.
- Original copies of repair orders or other receipts that include the mileage and date the vehicle was serviced. Each receipt should be signed by a qualified automotive service technician.
- For self maintenance, a statement that you completed the maintenance yourself, displaying mileage and the date the work was performed. Also, receipts for the replacement parts (fluid, filters, etc.) indicating the date and mileage must accompany this statement.

NOTE
If you elect to perform maintenance yourself or have your vehicle serviced at a location other than an Authorized Mazda Dealer, Mazda requires that all fluids, parts and materials must meet Mazda standards for durability and performance as described in this manual.

Claims against the warranty resulting from lack of maintenance, as opposed to defective materials or authorized Mazda workmanship, will not be honored.

Any auto repair shop using parts equivalent to your Mazda's original equipment may perform maintenance. **But we recommend that it always be done by an Authorized Mazda Dealer using genuine Mazda parts.**

Scheduled Maintenance (USA, Canada, and Puerto Rico)

Follow Schedule 1 if the vehicle is operated mainly where none of the following conditions apply.

- Repeated short-distance driving
- Driving in dusty conditions
- Driving with extended use of brakes
- Driving in areas where salt or other corrosive materials are used
- Driving on rough or muddy roads
- Extended periods of idling or low-speed operation
- Driving for long periods in cold temperatures or extremely humid climates
- Driving in extremely hot conditions
- Driving in mountainous conditions continually

If any do apply, follow Schedule 2 (Canada and Puerto Rico residents follow Schedule 2).

NOTE

After the prescribed period, continue to follow the described maintenance at the recommended intervals.

▼Schedule 1

Maintenance Interval		Number of months or kilometers (miles), whichever comes first							
	Months	6	12	18	24	30	36	42	48
	×1000 km	12	24	36	48	60	72	84	96
	×1000 miles	7.5	15	22.5	30	37.5	45	52.5	60
ENGINE									
Engine valve clearance		Audibly inspect every 120,000 km (75,000 miles), if noisy, adjust							
Drive belts						I			
Engine oil		R	R	R	R	R	R	R	R
Engine oil filter		R	R	R	R	R	R	R	R
COOLING SYSTEM									
Engine coolant	FL22 type*1	Replace at first 192,000 km (120,000 miles) or 10 years; after that, every 96,000 km (60,000 miles) or 5 years							
	Others	Replace at first 96,000 km (60,000 miles) or 4 years; after that, every 2 years							
FUEL SYSTEM									
Air filter						R			
Fuel lines and hoses*2					I				I
Hoses and tubes for emission*2									I
IGNITION SYSTEM									
Spark plugs		Replace every 120,000 km (75,000 miles)							
CHASSIS and BODY									
Brake lines, hoses and connections					I				I
Disc brakes			I		I		I		I
Tire (Rotation)		Rotate every 12,000 km (7,500 miles)							
Steering operation and linkages					I				I
Front and rear suspension, ball joints and wheel bearing axial play					I				I
Driveshaft dust boots					I				I
Bolts and nuts on chassis and body					T				T
Exhaust system and heat shields		Inspect every 72,000 km (45,000 miles) or 5 years							
All locks and hinges		L	L	L	L	L	L	L	L

Scheduled Maintenance

Maintenance Interval	Number of months or kilometers (miles), whichever comes first								
	Months	6	12	18	24	30	36	42	48
	×1000 km	12	24	36	48	60	72	84	96
	×1000 miles	7.5	15	22.5	30	37.5	45	52.5	60
AIR CONDITIONER SYSTEM									
Cabin air filter					R				R

Chart symbols:

I: Inspect: Inspect and clean, repair, adjust, fill up, or replace if necessary.
R: Replace
L: Lubricate
T: Tighten

Remarks:

*1 Use FL22 type coolant in vehicles with the inscription “FL22” on the radiator cap itself or the surrounding area. Use FL22 when replacing the coolant.
*2 According to state/provincial and federal regulations, failure to perform maintenance on these items will not void your emissions warranties. However, Mazda recommends that all maintenance services be performed at the recommended time or mileage/kilometer period to ensure long-term reliability.

▼Schedule 2

Maintenance Interval		Number of months or kilometers (miles), whichever comes first											
	Months	4	8	12	16	20	24	28	32	36	40	44	48
	×1000 km	8	16	24	32	40	48	56	64	72	80	88	96
	×1000 miles	5	10	15	20	25	30	35	40	45	50	55	60
ENGINE													
Engine valve clearance		Audibly inspect every 120,000 km (75,000 miles), if noisy, adjust											
Drive belts								I					
Engine oil	Puerto Rico	Replace every 5,000 km (3,000 miles) or 3 months											
	Others	R	R	R	R	R	R	R	R	R	R	R	R
Engine oil filter		R	R	R	R	R	R	R	R	R	R	R	R
COOLING SYSTEM													
Engine coolant	FL22 type*1	Replace at first 192,000 km (120,000 miles) or 10 years ; after that, every 96,000 km (60,000 miles) or 5 years											
	Others	Replace at first 96,000 km (60,000 miles) or 4 years; after that, every 2 years											
Engine coolant level		I	I	I	I	I	I	I	I	I	I	I	I
FUEL SYSTEM													
Air filter	Puerto Rico						R						R
	Others							R					
Fuel lines and hoses*2							I						I
Hoses and tubes for emission*2													I
IGNITION SYSTEM													
Spark plugs		Replace every 120,000 km (75,000 miles)											
ELECTRICAL SYSTEM													
Function of all lights		I	I	I	I	I	I	I	I	I	I	I	I

Scheduled Maintenance

Maintenance Interval	Number of months or kilometers (miles), whichever comes first											
	Months	**4**	**8**	**12**	**16**	**20**	**24**	**28**	**32**	**36**	**40**	**44**	**48**
	×1000 km	**8**	**16**	**24**	**32**	**40**	**48**	**56**	**64**	**72**	**80**	**88**	**96**
	×1000 miles	**5**	**10**	**15**	**20**	**25**	**30**	**35**	**40**	**45**	**50**	**55**	**60**
CHASSIS and BODY													
Brake lines, hoses and connections							I						I
Brake fluid level	I	I	I	I	I	I	I	I	I	I	I	I	I
Disc brakes			I			I			I			I
Tire (Rotation)	Rotate every 8,000 km (5,000 miles)											
Tire inflation pressure and tire wear	I	I	I	I	I	I	I	I	I	I	I	I
Steering operation and linkages						I						I
Power steering fluid level	I	I	I	I	I	I	I	I	I	I	I	I
Front and rear suspension, ball joints and wheel bearing axial play						I						I
Driveshaft dust boots						I						I
Bolts and nuts on chassis and body						T						T
Body condition*3 (for rust, corrosion and perforation)			I			I			I			I
Exhaust system and heat shields	Inspect every 72,000 km (45,000 miles) or 5 years											
All locks and hinges	L	L	L	L	L	L	L	L	L	L	L	L
Washer fluid level	I	I	I	I	I	I	I	I	I	I	I	I
AIR CONDITIONER SYSTEM												
Cabin air filter	Replace every 40,000 km (25,000 miles) or 2 years											

Chart symbols:

I: Inspect: Inspect and clean, repair, adjust, fill up, or replace if necessary.
R: Replace
L: Lubricate
T: Tighten

Remarks:

*1 Use FL22 type coolant in vehicles with the inscription “FL22” on the radiator cap itself or the surrounding area. Use FL22 when replacing the coolant.
*2 According to state/provincial and federal regulations, failure to perform maintenance on these items will not void your emissions warranties. However, Mazda recommends that all maintenance services be performed at the recommended time or mileage/kilometer period to ensure long-term reliability.
*3 Canada only.

Scheduled Maintenance (Mexico)

Follow Schedule 1 if the vehicle is operated mainly where none of the following conditions apply.

- Repeated short-distance driving
- Driving in dusty conditions
- Driving with extended use of brakes
- Driving in areas where salt or other corrosive materials are used
- Driving on rough or muddy roads
- Extended periods of idling or low-speed operation
- Driving for long periods in cold temperatures or extremely humid climates
- Driving in extremely hot conditions
- Driving in mountainous conditions continually

If any do apply, follow Schedule 2.

NOTE

After the prescribed period, continue to follow the described maintenance at the recommended intervals.

Scheduled Maintenance

▼Schedule 1

Maintenance Interval		Number of months or kilometers, whichever comes first											
	Months	6	12	18	24	30	36	42	48	54	60	66	72
	×1000 km	10	20	30	40	50	60	70	80	90	100	110	120
ENGINE													
Engine valve clearance		Audibly inspect every 120,000 km, if noisy, adjust											
Drive belts					I				I				I
Engine oil		R	R	R	R	R	R	R	R	R	R	R	R
Engine oil filter		R	R	R	R	R	R	R	R	R	R	R	R
COOLING SYSTEM													
Cooling system					I				I				I
Engine coolant	FL22 type*1	Replace at first 200,000 km or 10 years; after that, every 100,000 km or 5 years											
	Others				R				R				R
FUEL SYSTEM													
Air filter			R		R		R		R		R		R
Fuel lines and hoses					I*2				I*2				I
Hoses and tubes for emission					I*2				I*2				I
Fuel filter		Replace every 60,000 km											
IGNITION SYSTEM													
Spark plugs		Replace every 120,000 km											
CHASSIS and BODY													
Brake lines, hoses and connections			I		I		I		I		I		I
Brake fluid level		I	I	I		I	I	I		I	I	I	
Brake fluid					R				R				R
Disc brakes		I	I	I	I	I	I	I	I	I	I	I	I
Tire (Rotation)		Rotate every 10,000 km											
Tire inflation pressure and tire wear		I	I	I	I	I	I	I	I	I	I	I	I
Steering operation and linkages		I	I	I	I	I	I	I	I	I	I	I	I
Power steering fluid level		I	I	I	I	I	I	I	I	I	I	I	I
Front and rear suspension, ball joints and wheel bearing axial play			I		I		I		I		I		I
Driveshaft dust boots			I		I		I		I		I		I
Bolts and nuts on chassis and body			T		T		T		T		T		T
Exhaust system and heat shields			I		I		I		I		I		I
All locks and hinges		L	L	L	L	L	L	L	L	L	L	L	L
Washer fluid level		I	I	I	I	I	I	I	I	I	I	I	I

Maintenance Interval	Number of months or kilometers, whichever comes first												
	Months	6	12	18	24	30	36	42	48	54	60	66	72
	×1000 km	10	20	30	40	50	60	70	80	90	100	110	120
AIR CONDITIONER SYSTEM													
Cabin air filter					R				R				R

Chart symbols:

I: Inspect: Inspect and clean, repair, adjust, fill up, or replace if necessary.
R: Replace
L: Lubricate
T: Tighten

Remarks:

*1 Use FL22 type coolant in vehicles with the inscription “FL22” on the radiator cap itself or the surrounding area. Use FL22 when replacing the coolant.
*2 According to state/provincial and federal regulations, failure to perform maintenance on these items will not void your emissions warranties. However, Mazda recommends that all maintenance services be performed at the recommended time or kilometer period to ensure long-term reliability.

Scheduled Maintenance

▼Schedule 2

Maintenance Interval		Number of months or kilometers, whichever comes first											
	Months	3	6	9	12	15	18	21	24	27	30	33	36
	×1000 km	5	10	15	20	25	30	35	40	45	50	55	60
ENGINE													
Engine valve clearance		Audibly inspect every 120,000 km, if noisy, adjust											
Drive belts									I				
Engine oil		R	R	R	R	R	R	R	R	R	R	R	R
Engine oil filter		R	R	R	R	R	R	R	R	R	R	R	R
COOLING SYSTEM													
Cooling system									I				
Engine coolant	FL22 type*1	Replace at first 200,000 km or 10 years; after that, every 100,000 km or 5 years											
	Others								R				
Engine coolant level		I	I	I	I	I	I	I	I	I	I	I	I
FUEL SYSTEM													
Air filter			C		R		C		R		C		R
Fuel lines and hoses									I*2				
Hoses and tubes for emission									I*2				
Fuel filter		Replace every 60,000 km											
IGNITION SYSTEM													
Spark plugs		Replace every 120,000 km											
ELECTRICAL SYSTEM													
Function of all lights		I	I	I	I	I	I	I	I	I	I	I	I
CHASSIS and BODY													
Brake lines, hoses and connections					I				I				I
Brake fluid level			I		I		I				I		I
Brake fluid									R				
Disc brakes			I		I		I		I		I		I
Tire (Rotation)		Rotate every 10,000 km											
Tire inflation pressure and tire wear			I		I		I		I		I		I
Steering operation and linkages			I		I		I		I		I		I
Power steering fluid level			I		I		I		I		I		I
Front and rear suspension, ball joints and wheel bearing axial play					I				I				I
Driveshaft dust boots					I				I				I
Bolts and nuts on chassis and body					T				T				T
Exhaust system and heat shields					I				I				I
All locks and hinges			L		L		L		L		L		L
Washer fluid level			I		I		I		I		I		I

Maintenance Interval	Number of months or kilometers, whichever comes first												
	Months	3	6	9	12	15	18	21	24	27	30	33	36
	×1000 km	5	10	15	20	25	30	35	40	45	50	55	60
AIR CONDITIONER SYSTEM													
Cabin air filter					R				R				R

Chart symbols:

I: Inspect: Inspect and clean, repair, adjust, fill up, or replace if necessary.
R: Replace
L: Lubricate
C: Clean
T: Tighten

Remarks:

*1 Use FL22 type coolant in vehicles with the inscription “FL22” on the radiator cap itself or the surrounding area. Use FL22 when replacing the coolant.
*2 According to state/provincial and federal regulations, failure to perform maintenance on these items will not void your emissions warranties. However, Mazda recommends that all maintenance services be performed at the recommended time or kilometer period to ensure long-term reliability.

Scheduled Maintenance

(Cont.)

Maintenance Interval		Number of months or kilometers, whichever comes first											
	Months	39	42	45	48	51	54	57	60	63	66	69	72
	×1000 km	65	70	75	80	85	90	95	100	105	110	115	120
ENGINE													
Engine valve clearance		Audibly inspect every 120,000 km, if noisy, adjust											
Drive belts					I								I
Engine oil		R	R	R	R	R	R	R	R	R	R	R	R
Engine oil filter		R	R	R	R	R	R	R	R	R	R	R	R
COOLING SYSTEM													
Cooling system					I								I
Engine coolant	FL22 type*1	Replace at first 200,000 km or 10 years; after that, every 100,000 km or 5 years											
	Others				R								R
Engine coolant level		I	I	I	I	I	I	I	I	I	I	I	I
FUEL SYSTEM													
Air filter			C		R		C		R		C		R
Fuel lines and hoses					I*2								I
Hoses and tubes for emission					I*2								I
Fuel filter		Replace every 60,000 km											
IGNITION SYSTEM													
Spark plugs		Replace every 120,000 km											
ELECTRICAL SYSTEM													
Function of all lights		I	I	I	I	I	I	I	I	I	I	I	I
CHASSIS and BODY													
Brake lines, hoses and connections					I				I				I
Brake fluid level			I				I		I		I		
Brake fluid					R								R
Disc brakes			I		I		I		I		I		I
Tire (Rotation)		Rotate every 10,000 km											
Tire inflation pressure and tire wear			I		I		I		I		I		I
Steering operation and linkages			I		I		I		I		I		I
Power steering fluid level			I		I		I		I		I		I
Front and rear suspension, ball joints and wheel bearing axial play					I				I				I
Driveshaft dust boots					I				I				I
Bolts and nuts on chassis and body					T				T				T
Exhaust system and heat shields					I				I				I
All locks and hinges			L		L		L		L		L		L
Washer fluid level			I		I		I		I		I		I

Maintenance Interval	Number of months or kilometers, whichever comes first												
	Months	39	42	45	48	51	54	57	60	63	66	69	72
	×1000 km	65	70	75	80	85	90	95	100	105	110	115	120
AIR CONDITIONER SYSTEM													
Cabin air filter					R				R				R

Chart symbols:

I: Inspect: Inspect and clean, repair, adjust, fill up, or replace if necessary.
R: Replace
L: Lubricate
C: Clean
T: Tighten

Remarks:

*1 Use FL22 type coolant in vehicles with the inscription “FL22” on the radiator cap itself or the surrounding area. Use FL22 when replacing the coolant.
*2 According to state/provincial and federal regulations, failure to perform maintenance on these items will not void your emissions warranties. However, Mazda recommends that all maintenance services be performed at the recommended time or kilometer period to ensure long-term reliability.

Owner Maintenance Schedule

The owner or a qualified service technician should make these vehicle inspections at the indicated intervals to ensure safe and dependable operation.

Bring any problem to the attention of an Authorized Mazda Dealer or qualified service technician as soon as possible.

▼When Refueling

- Brake and clutch fluid level (page 8-24)
- Engine coolant level (page 8-22)
- Engine oil level (page 8-21)
- Washer fluid level (page 8-26)

▼At Least Monthly

Tire inflation pressures (page 8-37)

▼At Least Twice a Year (For Example, Every Spring and Fall)

- Automatic transaxle fluid level (page 8-25)
- Power steering fluid level (page 8-24)

You can do the following scheduled maintenance items if you have some mechanical ability and a few basic tools and if you closely follow the directions in this manual.

- Engine coolant (page 8-22)
- Engine oil (page 8-20)

Owner Maintenance Precautions

Improper or incomplete service may result in problems. This section gives instructions only for items that are easy to perform.

As explained in the Introduction (page 8-2), several procedures can be done only by a qualified service technician with special tools.

Improper owner maintenance during the warranty period may affect warranty coverage. Refer to Introduction (page 8-2) for owner's responsibility in protecting your investment. For details, read the separate Mazda Warranty statement provided with the vehicle. If you are unsure about any servicing or maintenance procedure, have it done by an Authorized Mazda Dealer.

There are strict environmental laws regarding the disposal of waste oil and fluids. Please dispose of your waste properly and with due regard to the environment.

We recommend that you entrust the oil and fluid changes of your vehicle to an Authorized Mazda Dealer.

Owner Maintenance

WARNING

Do not perform maintenance work if you lack sufficient knowledge and experience or the proper tools and equipment to do the work. Have maintenance work done by a qualified technician:

Performing maintenance work on a vehicle is dangerous if not done properly. You can be seriously injured while performing some maintenance procedures.

If you must run the engine while working under the hood, make certain that you remove all jewelry (especially rings, bracelets, watches, and necklaces) and all neckties, scarves, and similar loose clothing before getting near the engine or cooling fan which may turn on unexpectedly:

Working under the hood with the engine running is dangerous. It becomes even more dangerous when you wear jewelry or loose clothing.
Either can become entangled in moving parts and result in injury.

Switch the ignition to off and make sure the fan is not running before attempting to work near the cooling fan:

Working near the cooling fan when it is running is dangerous. The fan could continue running indefinitely even if the engine has stopped and the engine compartment temperature is high. You could be hit by the fan and seriously injured.

Do not leave items in the engine compartment:

After you have finished checking or doing servicing in the engine compartment, do not forget and leave items such as tools or rags in the engine compartment.
Tools or other items left in the engine compartment could cause engine damage or a fire leading to an unexpected accident.

Engine Compartment Overview

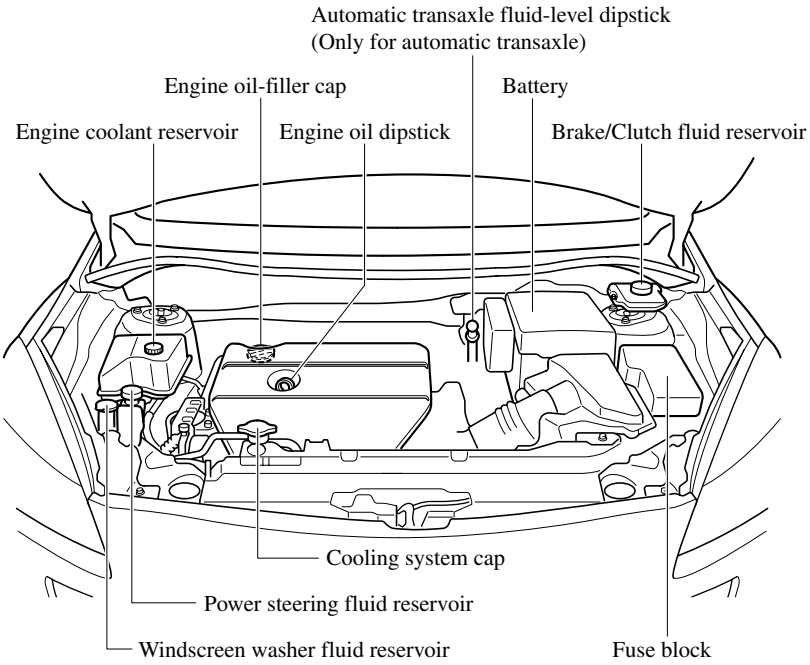

Engine Oil

NOTE
Changing the engine oil should be performed by an Authorized Mazda Dealer.
Refer to Introduction (page 8-2) for owner's responsibility in protecting your investment.

▼Recommended Oil

U.S.A. and CANADA

Use SAE 0W-20 engine oil.
Mazda Genuine Oil is used in your Mazda vehicle. Mazda Genuine 0W-20 Oil is required to achieve optimum fuel economy.

For maintenance service, Mazda recommends Mazda Genuine Parts and Castrol® (U.S.A. only).

(ILSAC)

Only use SAE 0W-20 oil "Certified For Gasoline Engines" by the American Petroleum Institute (API).
Oil with this trademark symbol conforms to the current engine and emission system protection standards and fuel economy requirements of the International Lubricant Standardization and Approval Committee (ILSAC), comprised of U.S. and Japanese automobile manufacturers.

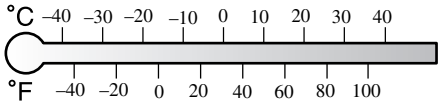

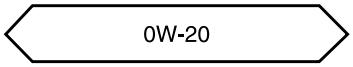

Except U.S.A. and CANADA

Use SAE 0W-20 engine oil.
Oil container labels provide important information.
A chief contribution this type of oil makes to fuel economy is reducing the amount of fuel necessary to overcome engine friction.

For maintenance service, Mazda recommends Mazda Genuine Parts and Castrol® (Mexico only).

(ILSAC)

(Mexico)
Use SAE 0W-20 engine oil. If SAE 0W-20 engine oil is not available, use SAE 5W-20, 5W-30 engine oil.

The quality designation SM, or ILSAC must be on the label.

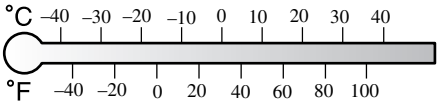

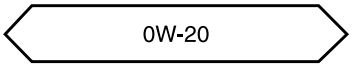

▼Inspecting Engine Oil Level

1. Be sure the vehicle is on a level surface.
2. Warm up the engine to normal operating temperature.
3. Turn it off and wait at least 5 minutes for the oil to return to the oil pan.
4. Pull out the dipstick, wipe it clean, and reinsert it fully.

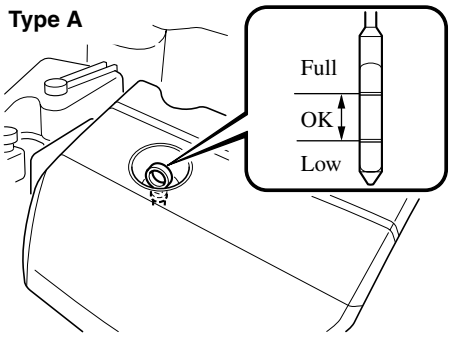

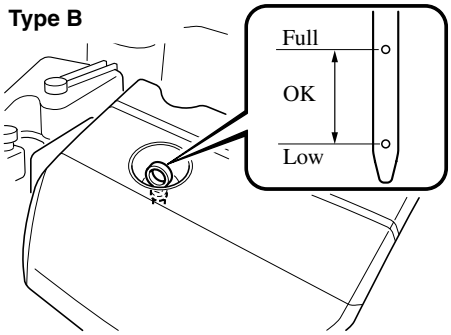

5. Pull it out again and examine the level. The level is normal if it is between Low and Full.
   If it is near or below Low, add enough oil to bring the level to Full.

⚠ CAUTION

Do not add engine oil over Full. This may cause engine damage.

6. Make sure the O-ring on the dipstick is positioned properly before reinserting the dipstick.

Engine Coolant

▼Inspecting Coolant Level

⚠ WARNING

Do not use a match or live flame in the engine compartment. DO NOT ADD COOLANT WHEN THE ENGINE IS HOT:

A hot engine is dangerous. If the engine has been running, parts of the engine compartment can become very hot. You could be burned. Carefully inspect the engine coolant in the coolant reservoir, but do not open it.

Switch the ignition to off and make sure the fan is not running before attempting to work near the cooling fan:

Working near the cooling fan when it is running is dangerous. The fan could continue running indefinitely even if the engine has stopped and the engine compartment temperature is high. You could be hit by the fan and seriously injured.

✓ Do not remove either cooling system cap when the engine and radiator are hot:

When the engine and radiator are hot, scalding coolant and steam may shoot out under pressure and cause serious injury.

NOTE

Changing the coolant should be done by an Authorized Mazda Dealer.

Inspect the antifreeze protection and coolant level in the coolant reservoir at least once a year—at the beginning of the winter season—and before traveling where temperatures may drop below freezing.

Inspect the condition and connections of all cooling system and heater hoses. Replace any that are swollen or deteriorated.

The coolant should be at full in the radiator and between the F and L marks on the coolant reservoir when the engine is cool.

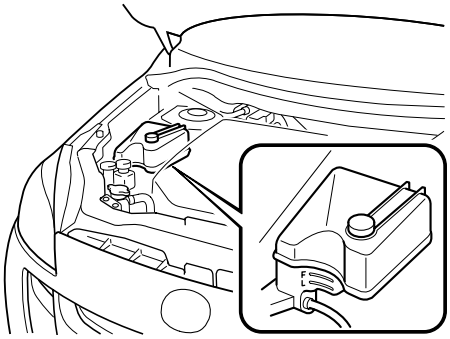

If it is at or near L, add enough coolant to the coolant reservoir to provide freezing and corrosion protection and to bring the level to F.
Securely tighten the coolant reservoir tank cap after adding coolant.

⚠ CAUTION

➢ *Radiator coolant will damage paint.*
Rinse it off quickly if spilled.

- *Use only soft (demineralized) water in the coolant mixture. Water that contains minerals will cut down on the coolant's effectiveness.*
- *Do not add only water. Always add a proper coolant mixture.*
- *The engine has aluminum parts and must be protected by an ethylene-glycol-based coolant to prevent corrosion and freezing.*
- *DO NOT USE coolants Containing Alcohol, methanol, Borate or Silicate.*
  These coolants could damage the cooling system.
- *DO NOT MIX alcohol or methanol with the coolant. This could damage the cooling system.*
- *Do not use a solution that contains more than 60% antifreeze.*
  This would reduce effectiveness.
- *If the "FL22" mark is shown on or near the cooling system cap, use of FL-22 is recommended when replacing engine coolant. Using engine coolant other than FL-22 may cause serious damage to the engine and cooling system.*

If the coolant reservoir is empty or new coolant is required frequently, consult an Authorized Mazda Dealer.

Brake/Clutch Fluid

▼Inspecting Brake/Clutch Fluid Level

WARNING

If the brake/clutch fluid level is low, have the brakes inspected:

A low brake/clutch fluid level is dangerous.
A low level could indicate brake lining wear or a brake system leak which could cause the brakes to fail and lead to an accident.

The brakes and clutch draw fluid from the same reservoir.
Inspect the fluid level in the reservoir regularly. It should be kept between the MAX and MIN lines.
The level normally drops with accumulated distance, a condition associated with wear of brake and clutch linings. If it is excessively low, have the brake/clutch system inspected by an Authorized Mazda Dealer.

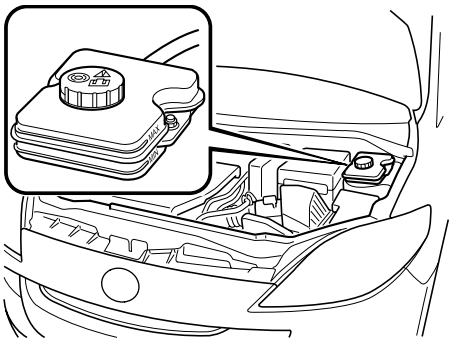

Power Steering Fluid

▼Inspecting Power Steering Fluid Level

CAUTION

To avoid damage to the power steering pump, do not operate the vehicle for long periods when the power steering fluid level is low.

Inspect the fluid level in the reservoir at each engine oil change with the engine off and cold.

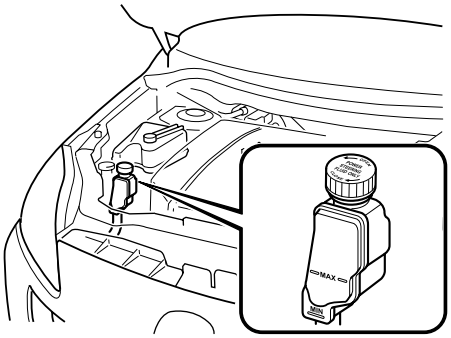

The level must be kept between MIN and MAX.

Visually examine the lines and hoses for leaks and damage.

If the fluid decreases significantly or the fluid level is around MIN or lower than MIN, consult an Authorized Mazda Dealer to have the vehicle inspected.

Automatic Transaxle Fluid (ATF)*

▼Inspecting Automatic Transaxle Fluid Level

The automatic transaxle fluid level should be inspected regularly. Measure it as described below.

⚠ CAUTION

Always check the automatic transaxle fluid level according to the following procedure. If the procedure is not done correctly, the automatic transaxle fluid level cannot be measured accurately which could lead to automatic transaxle damage.

1. Park on a level surface and set the parking brake firmly.
2. Make sure there is no ATF leakage from the ATF hose or the housing.
3. Shift the shift lever to the park position (P), start the engine and warm it up.

⚠ CAUTION

Do not shift the shift lever while the engine is warming up. If the ATF level is extremely low, the automatic transaxle could be damaged.

4. While the engine is still idling, pull out the dipstick and wipe it clean, and then reinsert it.
5. Check the ATF level. If the ATF level does not reach 5 mm (0.2 in) from the end of the dipstick, consult an Authorized Mazda Dealer to have the vehicle inspected.

⚠ CAUTION

If there is no ATF adhering to the dipstick even after the engine has been warmed up, do not drive the vehicle. Otherwise, the automatic transaxle could be damaged.

6. With the brake pedal depressed, shift the shift lever from the park position (P) to drive position (D) at intervals of several seconds, and then shift to the park position (P) again.
7. Drive 5 km (4 mile) or more in a city.
8. Park on a level surface, shift the shift lever to the park position (P) and set the parking brake firmly.
9. While the engine is still idling, pull out the dipstick and wipe it clean, and then reinsert it.
10. Check the ATF level. The proper fluid level indicated on the dipstick should be as follows.

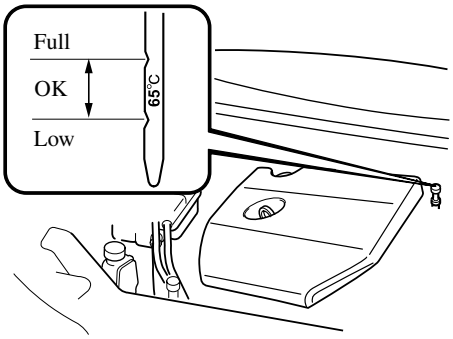

*Some models.

CAUTION

- *Use the cold scale only as a reference.*
- *If outside temperature is lower than about 20 °C (70 °F), start the engine and inspect the fluid level after the engine reaches operating temperature.*
- *If the vehicle has been driven for an extended period at high speeds or in city traffic in hot weather, inspect the level only after stopping the engine and allowing the fluid to cool for 30 minutes.*

If the ATF level does not reach the appropriate level, consult an Authorized Mazda Dealer to have the vehicle inspected.

NOTE

Inspect the fluid on both sides of the dipstick in a well lit area for an accurate reading.

Washer Fluid

▼Inspecting Washer Fluid Level

WARNING

Use only windshield washer fluid or plain water in the reservoir:

Using radiator antifreeze as washer fluid is dangerous. If sprayed on the windshield, it will dirty the windshield, affect your visibility, and could result in an accident.

Using Washer Fluid Without Anti-freeze Protection in Cold Weather:

Operating your vehicle in temperatures below 4 degrees C (40 degrees F) using washer fluid without anti-freeze protection is dangerous as it could cause impaired windshield vision and result in an accident. In cold weather, always use washer fluid with anti-freeze protection.

NOTE

State or local regulations may restrict the use of volatile organic compounds (VOCs), which are commonly used as anti-freeze agents in washer fluid. A washer fluid with limited VOC content should be used only if it provides adequate freeze resistance for all regions and climates in which the vehicle will be operated.

Inspect fluid level in the washer fluid reservoir; add fluid if necessary.

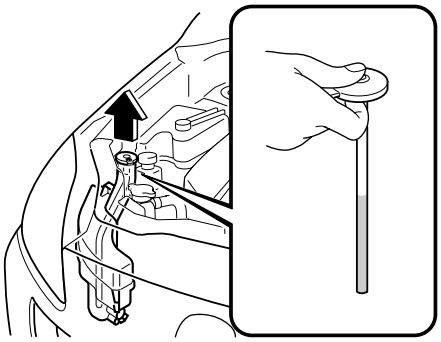

To inspect the washer fluid level in the front reservoir, pull off the cap. Then, holding your thumb over the hole in the center of the cap, lift it straight up. The fluid level can be seen from the fluid column in the pipe. Add fluid if necessary.

Use plain water if washer fluid is unavailable. But use only washer fluid in cold weather to prevent it from freezing.

NOTE
Front and rear washer fluid is supplied from the same reservoir.

Body Lubrication

All moving points of the body, such as door and hood hinges and locks, should be lubricated each time the engine oil is changed. Use a nonfreezing lubricant on locks during cold weather.

Make sure the hood's secondary latch keeps the hood from opening when the primary latch is released.

Wiper Blades

CAUTION

- *Hot waxes applied by automatic car washers have been known to affect the wiper's ability to clean windows.*
- *To prevent damage to the wiper blades, do not use gasoline, kerosene, paint thinner, or other solvents on or near them.*
- *When the wiper lever is in the AUTO position and the ignition is switched ON, the wipers may move automatically in the following cases:*
  - *If the windshield above the rain sensor is touched.*
  - *If the windshield above the rain sensor is wiped with a cloth.*
  - *If the windshield is struck with a hand or other object.*
  - *If the rain sensor is struck with a hand or other object from inside the vehicle.*

  Be careful not to pinch hands or fingers as it may cause injury, or damage the wipers. When washing or servicing your Mazda, make sure the wiper lever is in the OFF position.

Contamination of either the windshield or the blades with foreign matter can reduce wiper effectiveness. Common sources are insects, tree sap, and hot wax treatments used by some commercial car washes.

If the blades are not wiping properly, clean the window and blades with a good cleaner or mild detergent; then rinse thoroughly with clean water. Repeat if necessary.

▼Replacing Windshield Wiper Blades

When the wipers no longer clean well, the blades are probably worn or cracked. Replace them.

CAUTION

To prevent damage to the wiper arms and other components, don't try to sweep the wiper arm by hand.

NOTE

To prevent damage to the wiper arm blades when raising both the driver and passenger side wiper arms, raise the driver side wiper arm first. Conversely, when setting down the wiper arms, set the passenger side wiper arm down first.

1. Raise the wiper arm and turn the blade assembly to expose the plastic locking clip.
   Slide the assembly downward; then lift it off the arm.

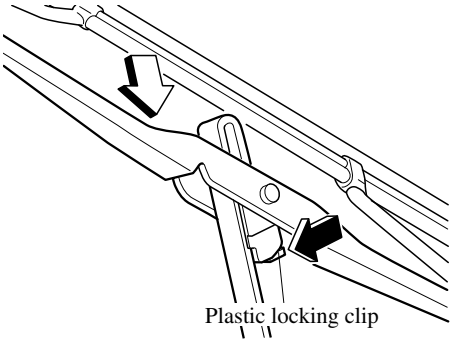

CAUTION

To prevent damage to the windshield let the wiper arm down easily, don't let it slap down on the windshield.

2. Hold the end of the rubber and pull until the tabs are free of the metal support.

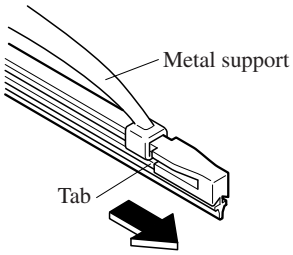

3. Remove the metal stiffeners from each blade rubber and install them in the new blade.

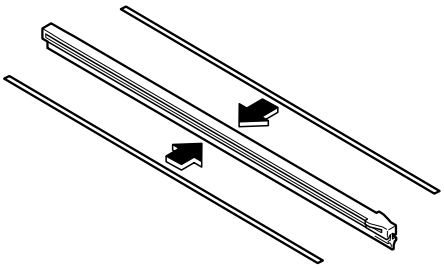

CAUTION

- *Don't bend or discard the stiffeners. You need to use them again.*
- *If the metal stiffeners are switched, the blade's wiping efficiency could be reduced. So don't use the driver's side metal stiffeners on the passenger's side, or vice versa.*
- *Be sure to reinstall the metal stiffeners in the new blade rubber so that the curve is the same as it was in the old blade rubber.*

4. Carefully insert the new blade rubber. Then install the blade assembly in the reverse order of removal.

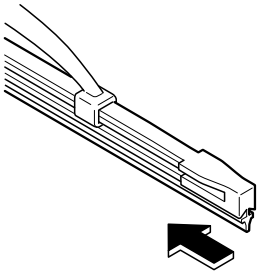

NOTE
Install the blade so that the tabs are toward the bottom of the wiper arm.

▼Replacing Rear Window Wiper Blade

When the wiper no longer cleans well, the blade is probably worn or cracked. Replace it.

CAUTION

To prevent damage to the wiper arm and other components, don't try to sweep the wiper arm by hand.

1. Remove the cover and raise the wiper arm.

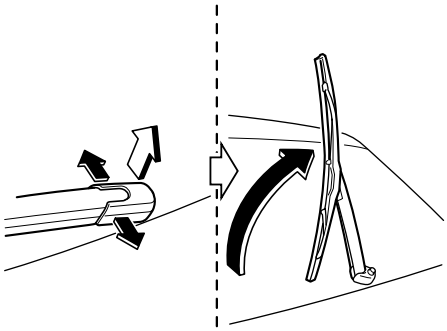

2. Firmly rotate the wiper blade to the right until it unlocks, then remove the blade.

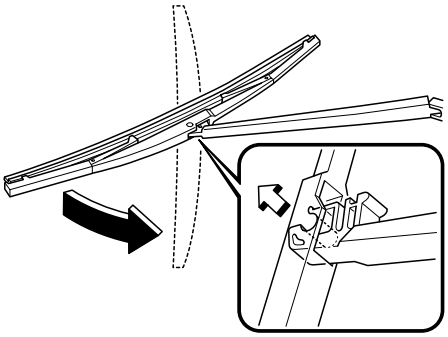

CAUTION

To prevent damage to the rear window let the wiper arm down easily, don't let it slap down on the rear window.

3. Pull down the blade rubber and slide it out of the blade holder.

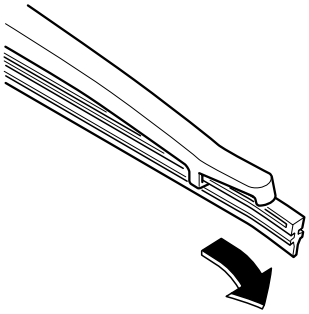

4. Remove the metal stiffeners from each blade rubber and install them in the new blade.

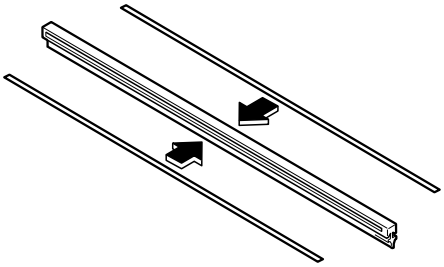

CAUTION

Don't bend or discard the stiffeners. You need to use them again.

5. Carefully insert the new blade rubber. Then install the blade assembly in the reverse order of removal.

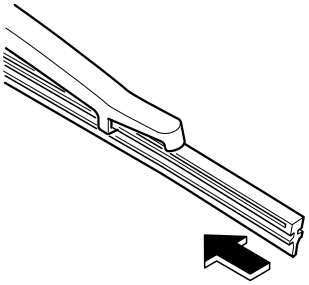

Battery

WARNING

Wash hands after handling the battery and related accessories:

Battery posts, terminals and related accessories contain lead and lead compounds, chemicals known to the State of California to cause cancer and reproductive harm.

Read the following precautions carefully before using the battery or inspecting to ensure safe and correct handling:

Always wear eye protection when working near the battery:

Working without eye protection is dangerous. Battery fluid contains SULFURIC ACID which could cause blindness if splashed into your eyes. Also, hydrogen gas produced during normal battery operation, could ignite and cause the battery to explode.

Wear eye protection and protective gloves to prevent contact with battery fluid:

Spilled battery fluid is dangerous.
Battery fluid contains SULFURIC ACID which could cause serious injuries if it gets in eyes, or on the skin or clothing. If this happens, immediately flush your eyes with water for 15 minutes or wash your skin thoroughly and get medical attention.

Always keep batteries out of the reach of children:

Allowing children to play near batteries is dangerous. Battery fluid could cause serious injuries if it gets in the eyes or on the skin.

Keep flames and sparks away from open battery cells and do not allow metal tools to contact the positive (+) or negative (−) terminal of the battery when working near a battery. Do not allow the positive (+) terminal to contact the vehicle body:

Flames and sparks near open battery cells are dangerous. Hydrogen gas, produced during normal battery operation, could ignite and cause the battery to explode. An exploding battery can cause serious burns and injuries. Keep all flames including cigarettes and sparks away from open battery cells.

Keep all flames, including cigarettes, and sparks away from open battery cells: *Flames and sparks near open battery cells are dangerous. Hydrogen gas, produced during normal battery operation, could ignite and cause the battery to explode. An exploding battery can cause serious burns and injuries.*

NOTE
Remove the battery cover before performing battery maintenance.

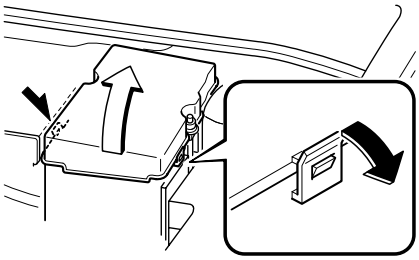

CAUTION

- *Do not use a tool which applies excessive force such as a screwdriver or pliers.*
  If excessive force is applied to the clips, they could be damaged.
  To prevent damaging the battery cover, remove/install the battery cover using the following procedure.

Removing battery cover

1 *Detach the clip facing the side of the vehicle first and pull it outward with your finger approx. 4 mm (0.2 in). Then, lift the cover slightly to clear the lock.*

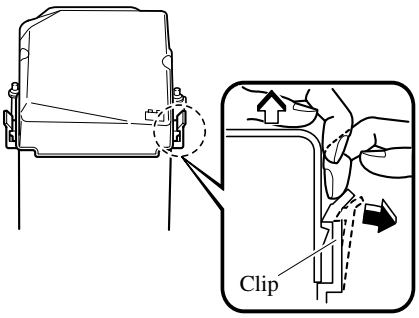

2 *Detach the clip facing the vehicle interior first and pull it outward with your finger approx. 4 mm (0.2 in). Then, lift the cover slightly to clear the lock.*

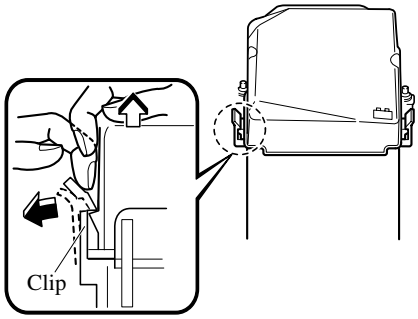

3 *Pull out the battery cover being careful not to allow it to contact the cowl grille.*

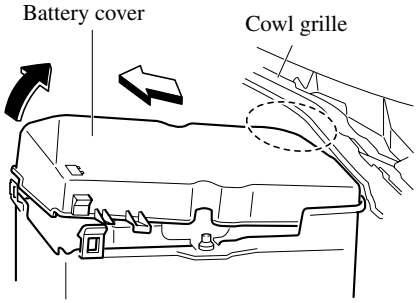

Installing battery cover

1 *Being careful not to contact the cowl grille, insert the tabs on the one end of the battery cover into the holes of the battery tray and engage the tabs.*

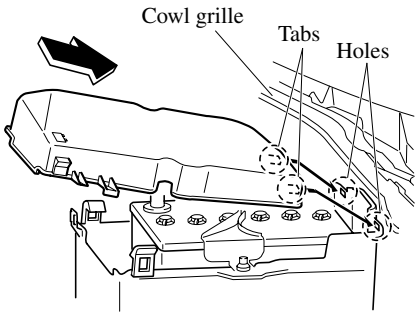

2 *Attach the clips on both sides of the battery cover.*

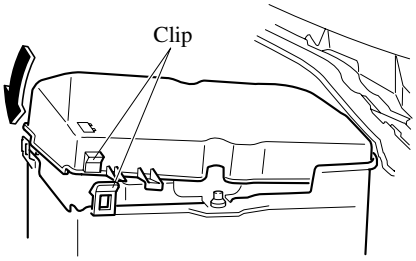

▼Battery Maintenance

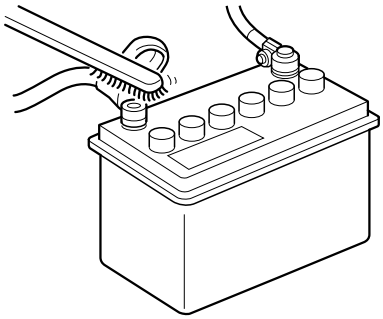

To get the best service from a battery:

- Keep it securely mounted.
- Keep the top clean and dry.
- Keep terminals and connections clean, tight, and coated with petroleum jelly or terminal grease.
- Rinse off spilled electrolyte immediately with a solution of water and baking soda.
- If the vehicle will not be used for an extended time, disconnect the battery cables.

▼Battery Replacement

Contact an Authorized Mazda Dealer for a battery replacement purchase.

Tires

For reasons of proper performance, safety, and better fuel economy, always maintain recommended tire inflation pressures and stay within the recommended load limits and weight distribution.

⚠ WARNING

Using Different Tire Types:

Driving your vehicle with different types of tires is dangerous. It could cause poor handling and poor braking; leading to loss of control. Except for the limited use of the temporary spare tire, use only the same type tires (radial, bias-belted, bias-type) on all four wheels.

Using Wrong-Sized Tires:

Using any other tire size than what is specified for your Mazda (page 10-6) is dangerous. It could seriously affect ride, handling, ground clearance, tire clearance, and speedometer calibration. This could cause you to have an accident. Use only tires that are the correct size specified for your Mazda.

▼Tire Inflation Pressure

WARNING

Always inflate the tires to the correct pressure:

Overinflation or underinflation of tires is dangerous. Adverse handling or unexpected tire failure could result in a serious accident.
Refer to Tires on page 10-6.

Use only a Mazda-genuine tire valve cap:

Use of a non-genuine part is dangerous as the correct tire air pressure cannot be maintained if the tire valve becomes damaged. If the vehicle is driven under this condition, the tire air pressure will decrease which could result in a serious accident. Do not use any part for the tire valve cap that is not a Mazda-genuine part.

The Tire Pressure Monitoring System* does not alleviate the need to check the tire condition every day, including whether the tires all look inflated properly. Inspect all tire pressure monthly (including the spare) when the tires are cold. Maintain recommended pressures for the best ride, handling, and minimum tire wear.
When checking the tire pressures, use of a digital tire pressure gauge is recommended.

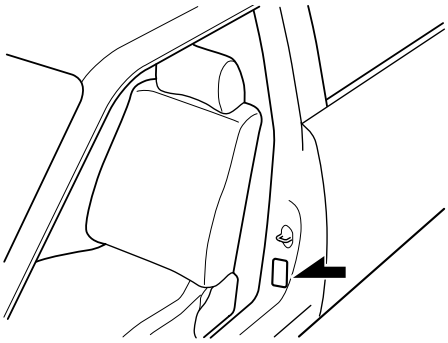

Refer to the specification charts (page 10-6).

*Some models.

NOTE

- *Always check tire pressure when tires are cold.*
- *Warm tires normally exceed recommended pressures. Don't release air from warm tires to adjust the pressure.*
- *Underinflation can cause reduced fuel economy, uneven and accelerated tire wear, and poor sealing of the tire bead, which will deform the wheel and cause separation of tire from rim.*
- *Overinflation can produce a harsh ride, uneven and accelerated tire wear, and a greater possibility of damage from road hazards.*
  Keep your tire pressure at the correct levels. If one frequently needs inflating, have it inspected.

▼Tire Rotation

⚠ WARNING

Rotate tires periodically:

Irregular tire wear is dangerous. To equalize tread wear for maintaining good performance in handling and braking, rotate the tires according to the scheduled maintenance charts. Refer to Scheduled Maintenance on page 8-4.

During rotation, inspect them for correct balance.

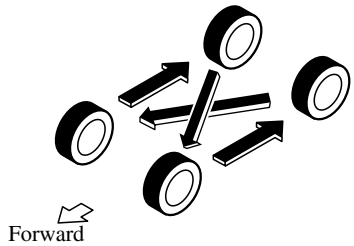

Do not include (TEMPORARY USE ONLY) spare tire in rotation.

Also, inspect them for uneven wear and damage. Abnormal wear is usually caused by one or a combination of the following:

- Incorrect tire pressure
- Improper wheel alignment
- Out-of-balance wheel
- Severe braking

After rotation, inflate all tire pressures to specification (page 10-6) and inspect the lug nuts for tightness.

⚠ CAUTION

Rotate unidirectional tires and radial tires that have an asymmetrical tread pattern or studs only from front to rear, not from side to side. Tire performance will be reduced if rotated from side to side.

▼Replacing a Tire

⚠ WARNING

Always use tires that are in good condition:

Driving with worn tires is dangerous. Reduced braking, steering, and traction could result in an accident.

Replace all four tires at the same time:

Replacing just one tire is dangerous. It could cause poor handling and poor braking resulting in loss of vehicle control. Mazda strongly recommends that you replace all four tires at the same time.

⚠ CAUTION

(With Tire Pressure Monitoring System)

When replacing/repairing the tires or wheels or both, have the work done by an Authorized Mazda Dealer, or the tire pressure sensors may be damaged.

NOTE

(With Tire Pressure Monitoring System)

- *When tires with steel wire reinforcement in the sidewalls are used, the system may not function correctly even with a genuine wheel.*
  Refer to System Error Activation on page 5-32.
- *Be sure to install the tire pressure sensors whenever tires or wheels are replaced.*
  Refer to Tires and Wheels on page 5-32.

If a tire wears evenly, a wear indicator will appear as a solid band across the tread.
Replace the tire when this happens.

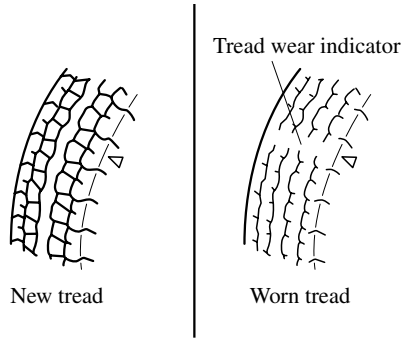

You should replace the tire before the band crosses the entire tread.

NOTE

Tires degrade over time, even when they are not being used on the road. It is recommended that tires generally be replaced when they are 6 years or older. Heat caused by hot climates or frequent high loading conditions can accelerate the aging process. You should replace the spare tire when you replace the other road tires due to the aging of the spare tire. The period in which the tire was manufactured (both week and year) is indicated by a 4-digit number.
Refer to Tire Labeling on page 9-23.

▼Temporary Spare Tire

Inspect the temporary spare tire at least monthly to make sure it's properly inflated and stored.

NOTE

The temporary spare tire condition gradually deteriorates even if it has not been used.

The temporary spare tire is easier to handle because of its construction which is lighter and smaller than a conventional tire. This tire should be used only for an emergency and only for a short distance.

Use the temporary spare tire only until the conventional tire is repaired, which should be as soon as possible.

Maintain its pressure at 420 kPa (4.2 kgf/cm^2 or bar, 60 psi).

CAUTION

- *Do not use your temporary spare tire rim with a snow tire or a conventional tire. Neither will properly fit and could damage both tire and rim.*
- *The temporary spare tire has a tread life of less than 5,000 km (3,000 miles). The tread life may be shorter depending on driving conditions.*
- *The temporary spare tire is for limited use, however, if the tread wear solid-band indicator appears, replace the tire with the same type of temporary spare (page 8-39).*

NOTE

Tires degrade over time, even when they are not being used on the road. It is recommended that tires generally be replaced when they are 6 years or older. Heat caused by hot climates or frequent high loading conditions can accelerate the aging process. You should replace the spare tire when you replace the other road tires due to the aging of the spare tire. The period in which the tire was manufactured (both week and year) is indicated by a 4-digit number.
Refer to Tire Labeling on page 9-23.

▼Replacing a Wheel

WARNING

Always use wheels of the correct size on your vehicle:

Using a wrong-sized wheel is dangerous. Braking and handling could be affected, leading to loss of control and an accident.

CAUTION

- *A wrong-sized wheel may adversely affect:*
  - *Tire fit*
  - *Wheel and bearing life*
  - *Ground clearance*
  - *Snow-chain clearance*
  - *Speedometer calibration*
  - *Headlight aim*
  - *Bumper height*
  - *Tire Pressure Monitoring System*
- ***(With Tire Pressure Monitoring System)***
  - *When replacing/repairing the tires or wheels or both, have the work done by an Authorized Mazda Dealer, or the tire pressure sensors may be damaged.*
  - *The wheels equipped on your Mazda are specially designed for installation of the tire pressure sensors. Do not use non-genuine wheels, otherwise it may not be possible to install the tire pressure sensors.*

NOTE

Be sure to install the tire pressure sensors whenever tires or wheels are replaced. Refer to Tires and Wheels on page 5-32.

When replacing a wheel, make sure the new one is the same as the original factory wheel in diameter, rim width, and offset (inset/outset).

Proper tire balancing provides the best riding comfort and helps reduce tread wear. Out-of-balance tires can cause vibration and uneven wear, such as cupping and flat spots.

Light Bulbs

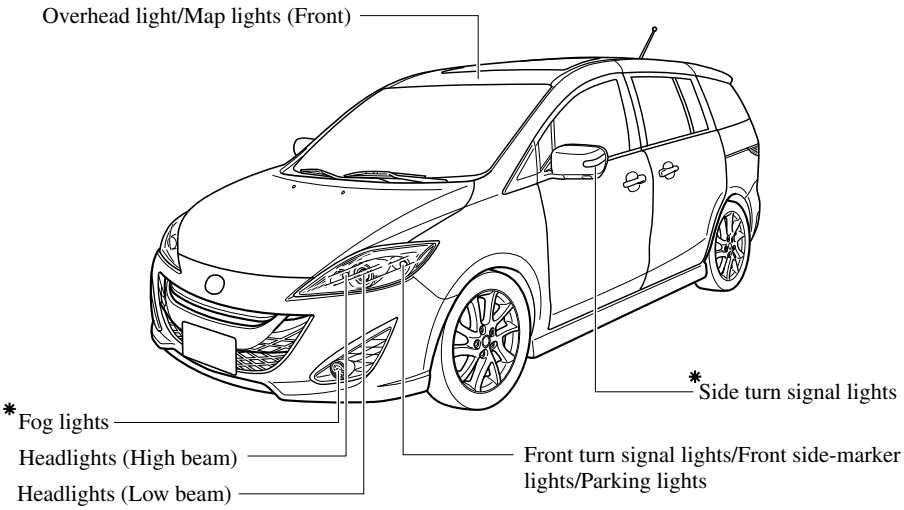

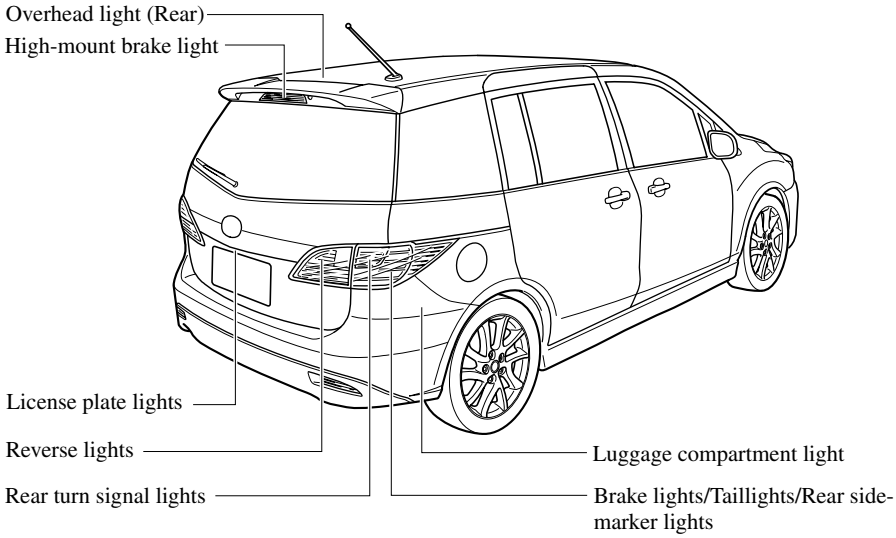

*Some models.

WARNING

Do not replace the xenon fusion bulbs yourself:

Replacing the xenon fusion bulbs yourself is dangerous. Because the xenon fusion bulbs require high voltage, you could receive an electric shock if the bulbs are handled incorrectly. Consult an Authorized Mazda Dealer when the replacement is necessary.

Never touch the glass portion of a halogen bulb with your bare hands and always wear eye protection when handling or working around the bulbs:

When a halogen bulb breaks, it is dangerous. These bulbs contain pressurized gas. If one is broken, it will explode and serious injuries could be caused by the flying glass. If the glass portion is touched with bare hands, body oil could cause the bulb to overheat and explode when lit.

Always keep halogen bulbs out of the reach of children:

Playing with a halogen bulb is dangerous. Serious injuries could be caused by dropping a halogen bulb or breaking it some other way.

▼Replacing Exterior Light Bulbs

Headlight bulbs

High-beam bulbs

1. Make sure the ignition is switched off, and the headlight switch is off.
2. Lift the hood.
3. Remove the hood wire from the guide.

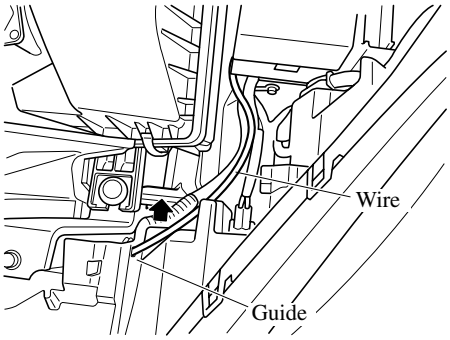

4. Disconnect the electrical connector from the bulb by pressing the tab on the connector with your finger and pulling the connector.

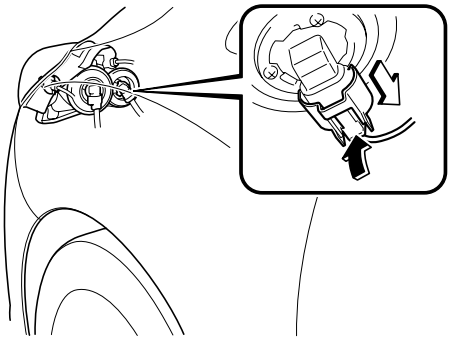

5. Turn the bulb assembly counterclockwise and remove it. Carefully remove the bulb from its socket in the reflector by gently pulling it straight backward out of the socket.

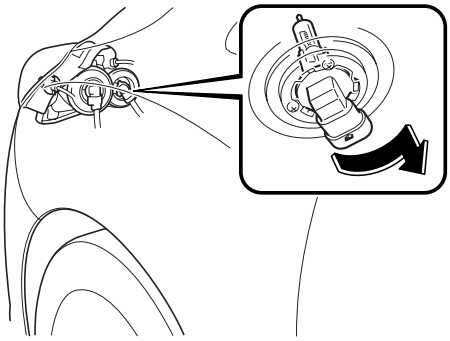

6. Install the new bulb in the reverse order of the removal procedure.

NOTE

- *To replace the bulb, contact an Authorized Mazda Dealer*
- *If the halogen bulb is accidentally touched, it should be cleaned with rubbing alcohol before being used.*
- *Use the protective cover and carton of the replacement bulb to dispose of the old bulb promptly out of the reach of children.*

Low-beam bulbs

(Xenon fusion bulb)
You cannot replace the low beam bulbs by yourself. The bulbs must be replaced at an Authorized Mazda Dealer.
(Halogen bulb)

1. Make sure the ignition is switched off, and the headlight switch is off.
2. Lift the hood.
3. Disconnect the electrical connector from the bulb by pressing the tab on the connector with your finger and pulling the connector.

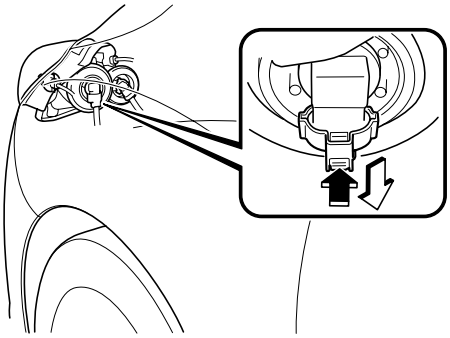

4. Turn the bulb assembly counterclockwise and remove it. Carefully remove the bulb from its socket in the reflector by gently pulling it straight backward out of the socket.

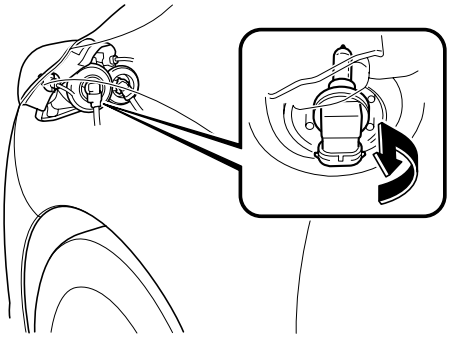

5. Install the new bulb in the reverse order of the removal procedure.

NOTE

- *To replace the bulb, contact an Authorized Mazda Dealer*
- *If the halogen bulb is accidentally touched, it should be cleaned with rubbing alcohol before being used.*
- *Use the protective cover and carton of the replacement bulb to dispose of the old bulb promptly out of the reach of children.*

Fog light bulbs*

1. Make sure the ignition is switched off, and the headlight switch is off.
2. Turn the screw counterclockwise and remove it, then partially peel back the mudguard.

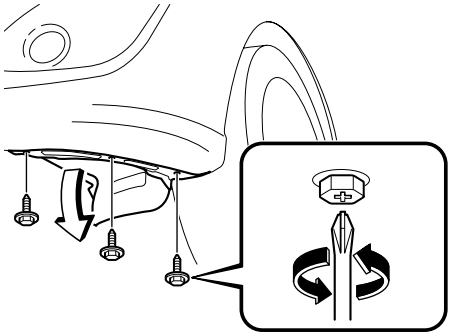

3. Disconnect the electrical connector from the bulb by pressing the tab on the connector with your finger and pulling the connector.

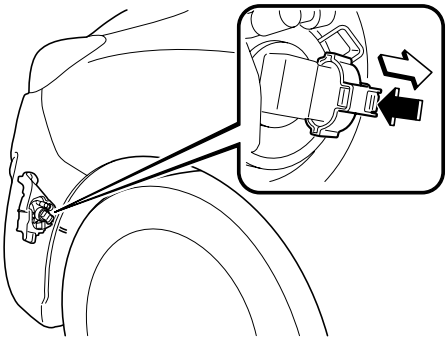

4. Turn the bulb assembly counterclockwise and remove it. Carefully remove the bulb from its socket in the reflector by gently pulling it straight backward out of the socket.

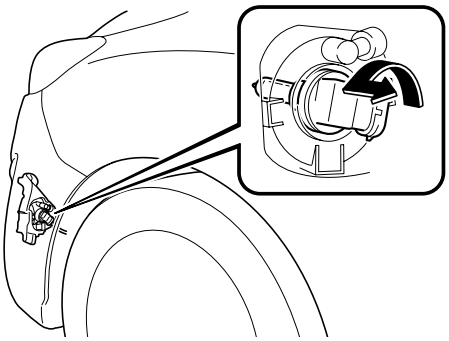

5. Install the new bulb in the reverse order of the removal procedure.

*Some models.

NOTE

- *To replace the bulb, contact an Authorized Mazda Dealer*
- *If the halogen bulb is accidentally touched, it should be cleaned with rubbing alcohol before being used.*
- *Use the protective cover and carton of the replacement bulb to dispose of the old bulb promptly out of the reach of children.*

Front turn signal lights/Front side-marker lights/Parking lights

1. Make sure the ignition is switched off, and the headlight switch is off.
2. Lift the hood.
3. Turn the socket and bulb assembly counterclockwise and remove it.
4. Remove the bulb by pressing it in slightly and turning it counterclockwise.

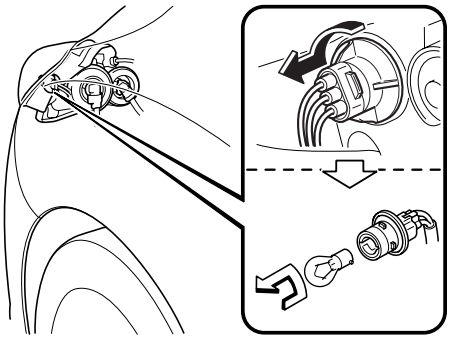

5. Install the new bulb in the reverse order of the removal procedure.

Side turn signal lights*

Due to the complexity and difficulty of the procedure, the LED bulbs must be replaced by an Authorized Mazda Dealer.

NOTE

LED bulb replacement is not possible because it is built into the unit. Replace the unit.

Brake lights/Taillights/Rear side-marker lights, Rear turn signal lights

1. Make sure the ignition is switched off, and the headlight switch is off.
2. Turn the bolts counterclockwise and remove them.

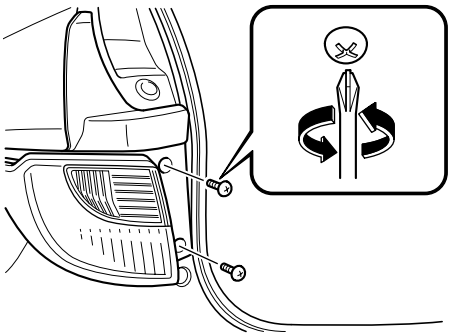

3. Pull the upper part of the cover around the clip outward to detach the clip.

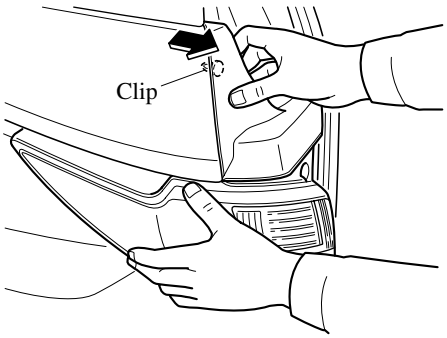

*Some models.

4. Pull the unit rearward to remove it.

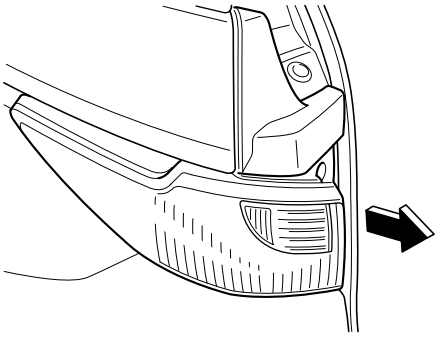

5. Turn the socket and bulb assembly counterclockwise and remove it.
6. Disconnect the bulb from the socket.

Brake lights/Taillights/Rear side-marker lights

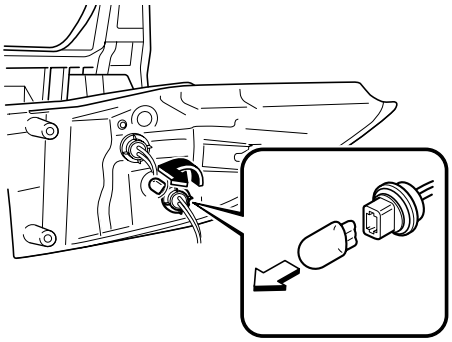

Rear turn signal lights

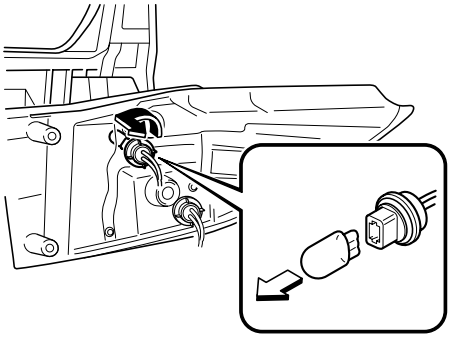

7. Install the new bulb in the reverse order of the removal procedure.

NOTE
To install the unit, insert the hooks (2 locations) on the unit side into the clips on the vehicle side, and install the unit.

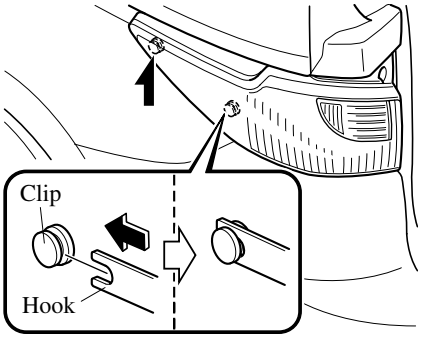

Reverse lights

1. Make sure the ignition is switched off, and the headlight switch is off.

2. Remove the cover with a cloth-wrapped flathead screwdriver to the cover.

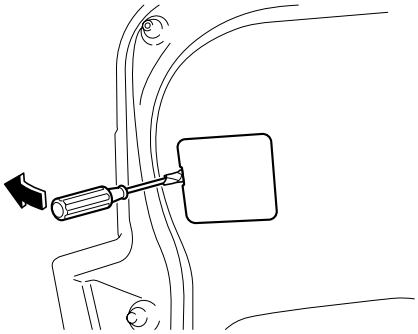

3. Turn the socket and bulb assembly counterclockwise and remove it.
4. Disconnect the bulb from the socket.

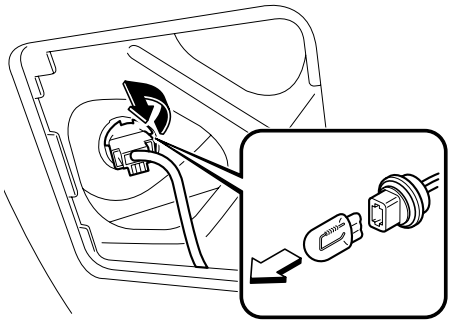

5. Install the new bulb in the reverse order of the removal procedure.

High-mount brake light

Due to the complexity and difficulty of the procedure, the LED bulbs must be replaced by an Authorized Mazda Dealer.

NOTE

LED bulb replacement is not possible because it is built into the unit. Replace the unit.

License plate lights

1. Make sure the ignition is switched off, and the headlight switch is off.
2. Wrap a flathead screwdriver with a soft cloth to prevent damage to the lens, and then remove the lens by carefully prying on the edge of the lens with a flathead screwdriver.

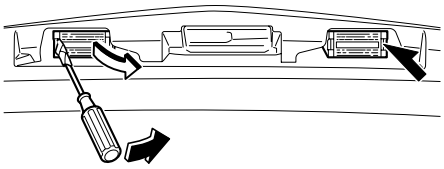

3. Disconnect the bulb by pulling it out.

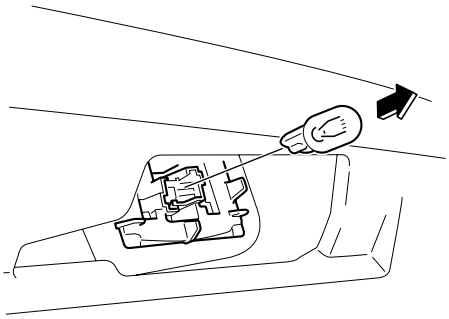

4. Install the new bulb in the reverse order of the removal procedure.

▼Replacing Interior Light Bulbs

Overhead light (Front)/Map lights

1. Wrap a flathead screwdriver with a soft cloth to prevent damage to the trim and gently insert it in the overhead light as shown in the figure, and then remove the overhead light unit.

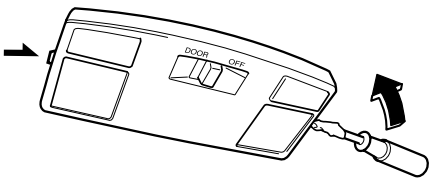

2. Turn the socket and bulb assembly counterclockwise and remove it.
3. Disconnect the bulb from the socket.

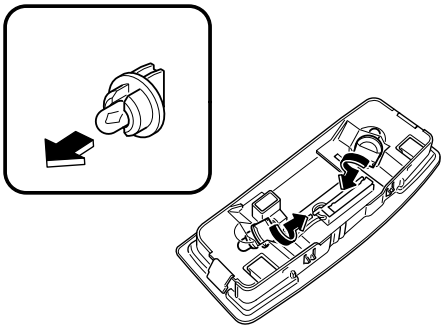

4. Install the new bulb in the reverse order of the removal procedure.

Overhead light (Rear)

1. Wrap a small flathead screwdriver with a soft cloth to prevent damage to the lens and remove the lens by carefully prying on the edge of the lens with the flathead screwdriver.
2. Disconnect the bulb by pulling it out.

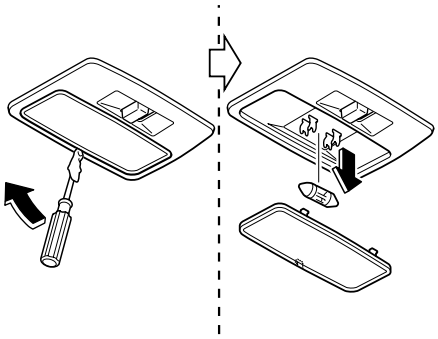

3. Install the new bulb in the reverse order of the removal procedure.

Luggage compartment light

1. Wrap a flathead screwdriver with a soft cloth to prevent damage to the trim and gently insert it in the luggage compartment light as shown in the figure, and then remove the luggage compartment light unit.
2. Disconnect the bulb by pulling it out.

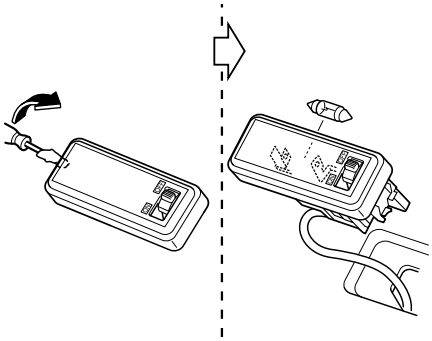

3. Install the new bulb in the reverse order of the removal procedure.

Fuses

Your vehicle's electrical system is protected by fuses.

If any lights, accessories, or controls don't work, inspect the appropriate circuit protector. If a fuse has blown, the inside element will be melted.

If the same fuse blows again, avoid using that system and consult an Authorized Mazda Dealer as soon as possible.

▼Fuse Replacement

Replacing the fuses on the passenger's side

If the electrical system does not work, first inspect the fuses on the passenger's side.

1. Make sure the ignition is switched off, and other switches are off.
2. Remove the cover.

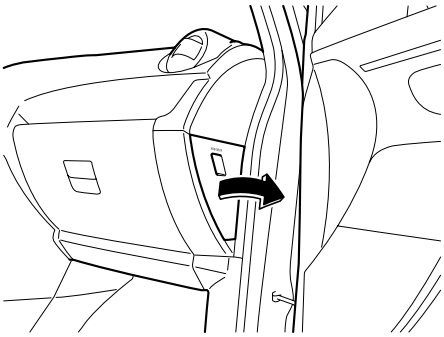

⚠ CAUTION

Pulling the cover off sideways may break the retaining tabs off.

3. Locate the position of the suspected fuse by using the chart inside the fuse block cover.
4. Pull the fuse straight out with the fuse puller provided on the inside of the engine compartment fuse block cover.

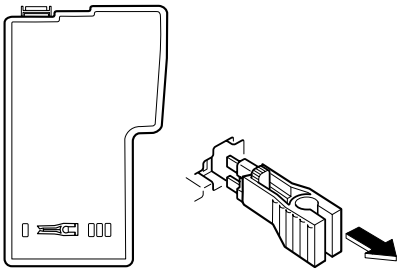

5. Inspect the fuse and replace it if it's blown.

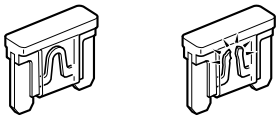

Normal Blown

6. Insert a new fuse of the same amperage rating, and make sure it fits tightly. If it does not fit tightly, have an expert install it. We recommend an Authorized Mazda Dealer.
   If you have no spare fuses, borrow one of the same rating from a circuit not essential to vehicle operation, such as the AUDIO or CIGAR circuit.

⚠ CAUTION

Always replace a fuse with one of the same rating. Otherwise you may damage the electric system.

7. Reinstall the cover and make sure that it is securely installed.

Replacing the fuses under the hood

If the headlights or other electrical components do not work and the fuses in the cabin are normal, inspect the fuse block under the hood. If a fuse is blown, it must be replaced. Follow these steps:

1. Make sure the ignition is switched off, and other switches are off.
2. Remove the fuse block cover.

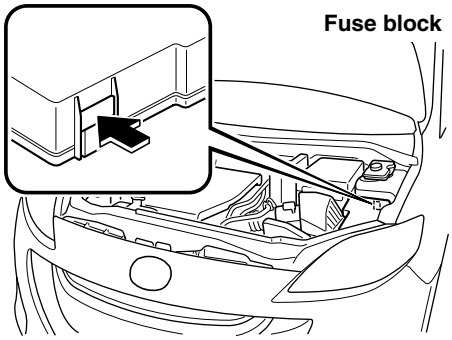

3. If any fuse but the MAIN fuse is blown, replace it with a new one **of the same amperage rating**.

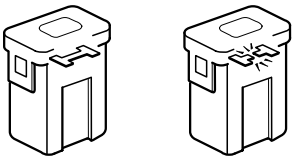

Normal Blown

WARNING

Do not replace the main fuse by yourself. Have an Authorized Mazda Dealer perform the replacement:

Replacing the fuse by yourself is dangerous because the MAIN fuse is a high current fuse. Incorrect replacement could cause an electrical shock or a short circuit resulting in a fire.

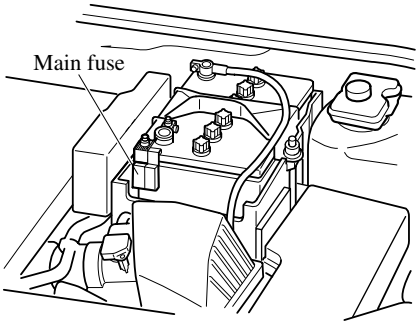

4. Reinstall the cover and make sure that it is securely installed.

▼Fuse Panel Description

Fuse block (Engine compartment)

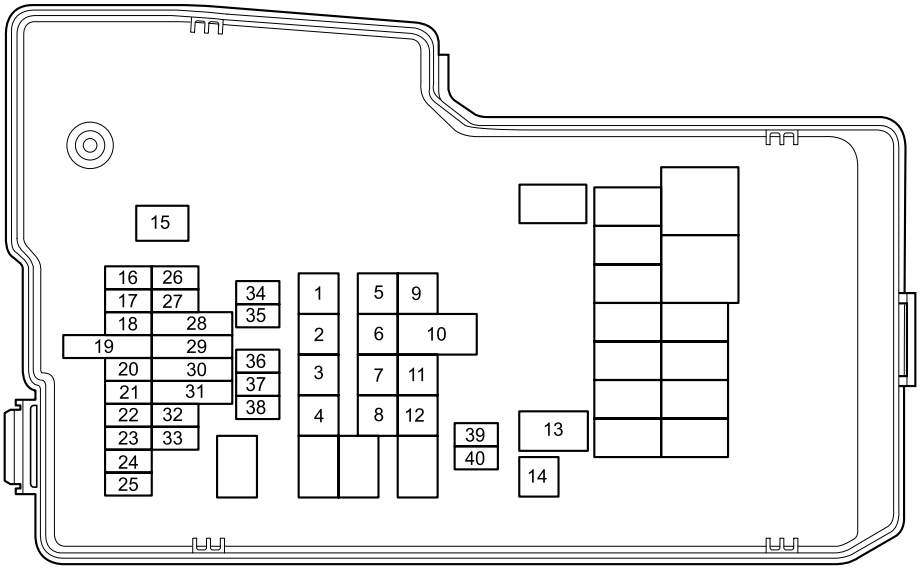

DESCRIPTION		FUSE RATING	PROTECTED COMPONENT
1	IG KEY1	50 A	For protection of various circuits
2	AD FAN	30 A	Cooling fan
3	GLOW2 HEATER2 FAN1	30 A	Air conditioner
4	EGI MAIN	40 A	Engine control system
5	INJ FAN2	—	—
6	ABS P	40 A	ABS, DSC
7	P.SLIDE L	—	—
8	TCM EVVT	20 A	Transaxle control system
9	HEATER1	40 A	Air conditioner
10	DCDC2	—	—
	GLOW1 HEATER3	30 A	Air conditioner
11	BTN	60 A	For protection of various circuits
12	IG KEY2	40 A	For protection of various circuits

Owner Maintenance

DESCRIPTION		FUSE RATING	PROTECTED COMPONENT
13	FAN1	30 A	Cooling fan
	AT PUMP	—	—
14	P.SLIDE R	—	—
15	EHPAS	80 A	Power assist steering
16	FOG	15 A	Fog lights*
17	D.LOCK	20 A	Power door lock
18	P.WIND	20 A	Power window
19	AT PUMP	—	—
	TCM	—	—
20	HEAD HI	20 A	Headlight high beam
21	ENG+B	10 A	Engine control system
22	STOP	10 A	Brake lights
23	F.WARMER FUEL PUMP	20 A	Fuel system
24	HAZARD	10 A	Hazard warning flasher, Turn signal lights
25	ROOM	15 A	Overhead lights
26	TAIL ENG FAN	15 A	Taillights, Parking lights, License plate lights
27	A/C MAG	10 A	Air conditioner
28	ABS V	20 A	ABS, Dynamic stability control system
	HORN	—	—
29	SUN ROOF	20 A	Moonroof*
	AUDIO1	—	—
30	H/CLEAN	—	—
	DCDC3	—	—
31	HORN	15 A	Horn
	ABS V	—	—
32	TAIL	—	—
33	ILLUMI	7.5 A	Instrument panel illumination
34	ENG INJ	25 A	Engine control system
35	ENG BAR	15 A	Engine control system
36	—	—	—
37	M.DEF	7.5 A	Mirror defogger
38	DEFOG	25 A	Rear window defogger
39	HEAD LO L	15 A	Headlight low beam (LH)
40	HEAD LO R	15 A	Headlight low beam (RH)

 *Some models.

Fuse block (Passenger's side)

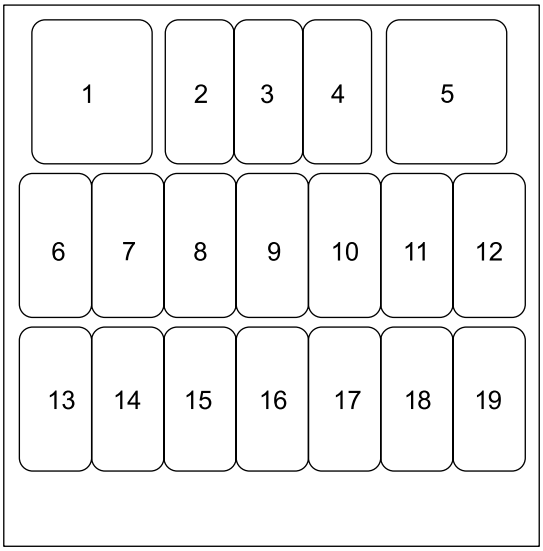

DESCRIPTION		FUSE RATING	PROTECTED COMPONENT
1	P/W	30 A	Power window
2	M.DEF	—	—
3	STARTER	10 A	Engine control system
4	ENG3	20 A	Engine control system
5	P/W	—	—
6	P.OUTLET	15 A	Accessory sockets (Cargo compartment)
7	SHIFT/L	5 A	Transaxle control system
8	CIGAR	15 A	Accessory sockets (Dashboard)
9	MIRROR	7.5 A	Power control mirror
10	A/C	10 A	Air conditioner
11	F.WIP	25 A	Front window wiper and washer
12	R.WIP	15 A	Rear window wiper
13	ENG	—	—
14	METER	10 A	Instrument cluster
15	SAS	10 A	Air bag
16	S.WARM	15 A	Seat warmer*
17	ABS/DSC	—	—
18	EHPAS	5 A	Power assist steering
19	ENG2	15 A	Engine control system

*Some models.

How to Minimize Environmental Paint Damage

The paintwork on your Mazda represents the latest technical developments in composition and methods of application.

Environmental hazards, however, can harm the paint's protective properties, if proper care is not taken.

Here are some examples of possible damage, with tips on how to prevent them.

▼Etching Caused by Acid Rain or Industrial Fallout

Occurrence

Industrial pollutants and vehicle emissions drift into the air and mix with rain or dew to form acids. These acids can settle on a vehicle's finish. As the water evaporates, the acid becomes concentrated and can damage the finish.
And the longer the acid remains on the surface, the greater the chance is for damage.

Prevention

It is necessary to wash and wax your vehicle to preserve its finish according to the instructions in this section. These steps should be taken immediately after you suspect that acid rain has settled on your vehicle's finish.

▼Damage Caused by Bird Dropping, Insects, or Tree Sap

Occurrence

Bird droppings contain acids. If these aren't removed they can eat away the clear and color base coat of the vehicle's paintwork.

When insects stick to the paint surface and decompose, corrosive compounds form. These can erode the clear and color base coat of the vehicle's paintwork if they are not removed.

Tree sap will harden and adhere permanently to the paint finish. If you scratch the sap off while it is hard, some vehicle paint could come off with it.

Prevention

It is necessary to have your Mazda washed and waxed to preserve its finish according to the instructions in this section. This should be done as soon as possible.

Bird droppings can be removed with a soft sponge and water. If you are traveling and these are not available, a moistened tissue may also take care of the problem. The cleaned area should be waxed according to the instructions in this section.
Insects and tree sap are best removed with a soft sponge and water or a commercially available chemical cleaner.

Another method is to cover the affected area with dampened newspaper for one to two hours. After removing the newspaper, rinse off the loosened debris with water.

▼Water Marks

Occurrence

Rain, fog, dew, and even tap water can contain harmful minerals such as salt and lime. If moisture containing these minerals settles on the vehicle and evaporates, the minerals will concentrate and harden to form white rings. The rings can damage your vehicle's finish.

Prevention

It is necessary to wash and wax your vehicle to preserve its finish according to the instructions in this section. These steps should be taken immediately after you find water marks on your vehicle's finish.

▼Paint Chipping

Occurrence

Paint chipping occurs when gravel thrown in the air by another vehicle's tires hits your vehicle.

How to avoid paint chipping

Keeping a safe distance between you and the vehicle ahead reduces the chances of having your paint chipped by flying gravel.

NOTE

- *The paint chipping zone varies with the speed of the vehicle. For example, when traveling at 90 km/h (56 mph), the paint chipping zone is 50 m (164 ft).*
- *In low temperatures a vehicle's finish hardens. This increases the chance of paint chipping.*
- *Chipped paint can lead to rust forming on your Mazda. Before this happens, repair the damage by using Mazda touch-up paint according to the instructions in this section. Failure to repair the affected area could lead to serious rusting and expensive repairs.*

Exterior Care

Follow **all** label and container directions when using a chemical cleaner or polish. Read all warnings and cautions.

▼Maintaining the Finish

Washing

⚠ CAUTION

- *When the wiper lever is in the AUTO position and the ignition is switched ON, the wipers may move automatically in the following cases:*
  - *If the windshield above the rain sensor is touched or wiped with a cloth.*
  - *If the windshield is struck with a hand or other object from either outside or inside the vehicle.*

  Keep hands and scrapers clear of the windshield when the wiper lever is in the AUTO position and the ignition is switched ON as fingers could be pinched or the wipers and wiper blades damaged when the wipers activate automatically.
  If you are going to clean the windshield, be sure the wipers are turned off completely—this is particularly important when clearing ice and snow—when it is most likely that the engine is left running.
- *Do not spray water in the engine compartment. Otherwise, it could result in engine-starting problems or damage to electrical parts.*
- *When washing and waxing the vehicle, be careful not to apply excessive force to any single area of the vehicle roof or the antenna. Otherwise, you could dent the vehicle or damage the antenna.*

To help protect the finish from rust and deterioration, wash your Mazda thoroughly and frequently, at least once a month, with lukewarm or cold water.

If the vehicle is washed improperly, the paint surface could be scratched. Here are some examples of how scratching could occur.

Scratches occur on the paint surface when:
- The vehicle is washed without first rinsing off dirt and other foreign matter.
- The vehicle is washed with a rough, dry, or dirty cloth.
- The vehicle is washed at a car wash that uses brushes that are dirty or too stiff.
- Cleansers or wax containing abrasives are used.

NOTE
- *Mazda is not responsible for scratches caused by automatic car washes or improper washing.*
- *Scratches are more noticeable on vehicles with darker paint finishes.*

To minimize scratches on the vehicle's paint finish:
- Rinse off any dirt or other foreign matter using lukewarm or cold water before washing.
- Use plenty of lukewarm or cold water and a soft cloth when washing the vehicle. Do not use a nylon cloth.
- Rub gently when washing or drying the vehicle.
- Take your vehicle only to a car wash that keeps its brushes well maintained.
- Do not use abrasive cleansers or wax that contain abrasives.

⚠ CAUTION

- ➢ *Do not use steel wool, abrasive cleaners, or strong detergents containing highly alkaline or caustic agents on chrome-plated or anodized aluminum parts. This may damage the protective coating; also, cleaners and detergents may discolor or deteriorate the paint.*
- ➢ *To prevent damaging the antenna, remove it before entering a car wash facility or passing beneath a low overhead clearance.*

Pay special attention to removing salt, dirt, mud, and other foreign material from the underside of the fenders, and make sure the drain holes in the lower edges of the doors and rocker panels are clean.

Insects, tar, tree sap, bird droppings, industrial fallout, and similar deposits can damage the finish if not removed immediately. When prompt washing with plain water is ineffective, use a mild soap made for use on vehicles.

Thoroughly rinse off all soap with lukewarm or cold water. Do not allow soap to dry on the finish.

After washing the vehicle, dry it with a clean chamois to prevent water spots from forming.

Appearance Care

WARNING

Dry off brakes that have become wet by driving slowly, releasing the accelerator pedal and lightly applying the brakes several times until the brake performance returns to normal:

Driving with wet brakes is dangerous. Increased stopping distance or the vehicle pulling to one side when braking could result in a serious accident. Light braking will indicate whether the brakes have been affected.

When using an automatic car wash

- Retract the door mirrors.
- The automatic car wash brushes could reduce the paint lustre or hasten paint deterioration.

When using a high water pressure car wash

High water temperature and high water pressure car washers are available depending on the type of car wash machine. If the car washer nozzle is put too close to the vehicle, the force of the spray could damage or deform the molding, affect the sealability of parts, and allow water to penetrate the interior. Keep a sufficient space (30 cm (12 in) or more) between the nozzle and the vehicle. In addition, do not spend too much time spraying the same area of the vehicle, and be very careful when spraying between gaps in doors and around windows.

Waxing

Your vehicle needs to be waxed when water no longer beads on the finish.

Always wash and dry the vehicle before waxing it. In addition to the vehicle body, wax the metal trim to maintain its luster.

1. Use wax which contains no abrasives. Waxes containing abrasive will remove paint and could damage bright metal parts.
2. Use a good grade of natural wax for metallic, mica, and solid colors.
3. When waxing, coat evenly with the sponge supplied or a soft cloth.
4. Wipe off the wax with a soft cloth.

NOTE

A spot remover to remove oil, tar, and similar materials will usually also take off the wax. Rewax these areas even if the rest of the vehicle does not need it.

▼Repairing Damage to the Finish

Deep scratches or chips on the finish should be repaired promptly. Exposed metal quickly rusts and can lead to major repairs.

CAUTION

If your Mazda is damaged and needs metal parts repaired or replaced, make sure the body shop applies anti-corrosion materials to all parts, both repaired and new. This will prevent them from rusting.

▼Bright-Metal Maintenance

- Use tar remover to remove road tar and insects. Never do this with a knife or similar tool.
- To prevent corrosion on bright-metal surfaces, apply wax or chrome preservative and rub it to a high luster.

- During cold weather or in coastal areas, cover bright-metal parts with a coating of wax or preservative heavier than usual. It would also help to coat them with noncorrosive petroleum jelly or some other protective compound.

CAUTION

Do not use steel wool, abrasive cleaners, or strong detergents containing highly alkaline or caustic agents on chrome-plated or anodized aluminum parts. This may result in damage to the protective coating and cause discoloration or paint deterioration.

▼Underbody Maintenance

Road chemicals and salt used for ice and snow removal and solvents used for dust control may collect on the underbody. If not removed, they will speed up rusting and deterioration of such underbody parts as fuel lines, frame, floor pan, and exhaust system, even though these parts may be coated with anti-corrosive material.

Thoroughly flush the underbody and wheel housings with lukewarm or cold water at the end of each winter. Try also to do this every month.

Pay special attention to these areas because they easily hide mud and dirt. **It will do more harm than good to wet down the road grime without removing it.**

The lower edges of doors, rocker panels, and frame members have drain holes that should not be clogged. Water trapped there will cause rusting.

WARNING

Dry wet brakes by driving very slowly and applying the brakes lightly until brake performance is normal:

Driving with wet brakes is dangerous. Increased stopping distance or the vehicle pulling to one side when braking could result in a serious accident. Light braking will indicate whether the brakes have been affected.

▼Aluminum Wheel Maintenance

A protective coating is provided over the aluminum wheels. Special care is needed to protect this coating.

CAUTION

Do not use any detergent other than mild detergent. Before using any detergent, verify the ingredients. Otherwise, the product could discolor or stain the aluminum wheels.

Appearance Care

NOTE

- *Do not use a wire brush or any abrasive cleaner, polishing compound, or solvent on aluminum wheels. They may damage the coating.*
- *Always use a sponge or soft cloth to clean the wheels.*
  Rinse the wheels thoroughly with lukewarm or cold water. Also, be sure to clean the wheels after driving on dusty or salted roads to help prevent corrosion.
- *Avoid washing your vehicle in an automatic car wash that uses high-speed or hard brushes.*
- *If your aluminum wheels lose luster, wax the wheels.*

(With Tire Pressure Monitoring System)
Check special requirements for Tire Pressure Monitoring System.
Refer to Tires and Wheels on page 5-32.

▼Plastic Part Maintenance

- When cleaning the plastic lenses of the lights, do not use gasoline, kerosene, rectified spirit, paint, thinner, highly acidic detergents, or strongly alkaline detergents. Otherwise, these chemical agents can discolor or damage the surfaces resulting in a significant loss in functionality. If plastic parts become inadvertently exposed to any of these chemical agents, flush with water immediately.
- If plastic parts such as the bumpers become inadvertently exposed to chemical agents or fluids such as gasoline, oil, engine coolant, or battery fluid, it could cause discoloration, staining, or paint peeling. Wipe off any such chemical agents or fluids using a soft cloth immediately.
- High water temperature and high water pressure car washers are available depending on the type of high pressure car washer device. If the car washer nozzle is put too close to the vehicle or aimed at one area for an extended period of time, it could deform plastic parts or damage the paint.
- Do not use wax containing compounds (polish). Otherwise, it could result in paint damage.
- In addition, do not use an electrical or air tool to apply wax. Otherwise, the frictional heat generated could result in deformation of plastic parts or paint damage.

Interior Care

WARNING

Do not spray water in the cabin:
Splashing water on electrical parts such as the audio unit and switches is dangerous as it could cause a malfunction or a fire.

▼Dashboard Precautions

Prevent caustic solutions such as perfume and cosmetic oils from contacting the dashboard. They'll damage and discolor the dashboard. If these solutions get on the dashboard, wipe them off immediately.

CAUTION

Do not use glazing agents.
Glazing agents contain ingredients which may cause discoloration, wrinkling, cracks and peeling.

▼Cleaning the Upholstery and Interior Trim

Vinyl

Remove dust and loose dirt from vinyl with a whisk broom or vacuum cleaner.
Clean vinyl with a leather-and-vinyl cleaner.

Leather*

Remove dust and sand first using a vacuum cleaner or other means, then wipe dirt off using a soft cloth with a leather cleaner or a soft cloth soaked in mild soap.
Wipe off the remaining cleaner or soap using a cloth soaked in clean water and wrung out well.
Remove moisture with a dry, soft cloth and allow the leather to further dry in a well-ventilated, shaded area. If the leather gets wet such as from rain, also remove moisture and dry it as soon as possible.

*Some models.

Appearance Care

NOTE

- *Because genuine leather is a natural material, its surface is not uniform and it may have natural scars, scratches, and wrinkles.*
- *To maintain the quality for as long as possible, periodical maintenance, about twice a year, is recommended.*
- *Sand and dust on the seat surface may damage the overcoat of the genuine leather surfaces and accelerate wear.*
- *Greasy soiling on genuine leather may cause molding and stains.*
- *Rubbing hard with a stiff brush or cloth may cause damage.*
- *Do not wipe the leather using alcohol, chlorine bleach, or organic solvents such as thinner, benzene, or gasoline. Otherwise, it may cause discoloration or stains.*
- *If the seats get wet, promptly remove moisture with a dry cloth. Remaining moisture on the surface may cause deterioration such as hardening and shrinkage.*
- *Exposure to direct sunlight for long periods may cause deterioration and shrinkage. When parking the car under direct sunlight for long periods, shade the interior using sunshades.*
- *Do not leave vinyl products on the seats for long periods as they may affect the leather quality and coloring. If the cabin temperature becomes hot, the vinyl may deteriorate and adhere to the genuine leather.*

Fabric

Remove dust and loose dirt from fabric with a whisk broom or vacuum cleaner. Clean it with a mild soap solution good for upholstery and carpets. Remove fresh spots immediately with a fabric spot cleaner.

To keep the fabric looking clean and fresh, take care of it. Otherwise its color will be affected, it can be stained easily, and its fire-resistance may be reduced.

⚠ CAUTION

Use only recommended cleaners and procedures. Others may affect appearance and fire-resistance.

Panel

When the interior panels need to be cleaned, use soft material such as a soft cloth soaked in clean water and wrung out well and lightly wipe off dirt from the surface. If a panel requires further cleaning, use the following procedure.

1. Wipe dirt off using a soft cloth soaked in mild detergent (about 5% solution).
2. Wipe off any remaining detergent using a cloth soaked in clean water and wrung out well.

NOTE

- *Do not wipe leather parts using alcohol, chlorine bleach, or organic solvents such as thinner, benzene, or gasoline. Otherwise, it may cause discoloration or stains.*
- *Scratches or nicks on the panels and metallic trim resulting from the use of a hard brush or cloth may not be repairable.*
- *Be particularly careful when cleaning high lustre panels and metallic trim as they can be easily scratched.*

▼Cleaning the Lap/Shoulder Belt Webbing

Clean the webbing with a mild soap solution recommended for upholstery or carpets. Follow instructions. Don't bleach or dye the webbing; this may weaken it.

After cleaning the belts, thoroughly dry the belt webbing and make sure there is no remaining moisture before retracting them.

⚠ WARNING

Have an Authorized Mazda Dealer replace damaged seat belts immediately:

Using damaged seat belts is dangerous. In a collision, damaged belts cannot provide adequate protection.

▼Cleaning the Window Interiors

If the windows become covered with an oily, greasy, or waxy film, clean them with glass cleaner. Follow the directions on the container.

⚠ CAUTION

- *Do not scrape or scratch the inside of the window glass. It could damage the thermal filaments and the antenna lines.*
- *When washing the inside of the window glass, use a soft cloth dampened in lukewarm water, gently wiping the thermal filaments and the antenna lines. Use of glass cleaning products could damage the thermal filaments and the antenna lines.*

▼Cleaning the Floor Mats

Rubber floor mats should be cleaned with mild soap and water only.

⚠ WARNING

Do not use rubber cleaners, such as tire cleaner or tire shine, when cleaning rubber floor mats:

Cleaning the rubber floor mats with rubber cleaning products makes the floor mats slippery.
This may cause an accident when depressing the accelerator, brake, or clutch (Manual transaxle) pedal or when getting in or out of the vehicle.

After removing the floor mats for cleaning, always reinstall them securely.Refer to Floor Mat on page 4-7.

9 Customer Information and Reporting Safety Defects

Important consumer information including warranties and add-on equipment.

Customer Assistance 9-2
Customer Assistance (U.S.A.) 9-2
Customer Assistance (Canada) 9-7
Customer Assistance (Puerto Rico) ... 9-10
Customer Assistance (Mexico) 9-11

Mazda Importer/Distributors 9-13
Importer/Distributor 9-13

Warranty 9-14
Warranties for Your Mazda 9-14
Outside the United States 9-15
Outside Canada 9-16
Registering Your Vehicle in A Foreign Country (Except United States and Canada) 9-17
Add-On Non-Genuine Parts and Accessories 9-18

Cell Phones 9-19
Cell Phones Warning 9-19

Event Data Recorder 9-20
Event Data Recorder (U.S.A. and Canada) 9-20

Uniform Tire Quality Grading System (UTQGS) 9-21
Uniform Tire Quality Grading System (UTQGS) 9-21

Tire Information (U.S.A.) 9-23
Tire Labeling 9-23
Location of the Tire Label (Placard) 9-29
Tire Maintenance 9-32
Vehicle Loading 9-35
Steps for Determining the Correct Load Limit 9-41

Reporting Safety Defects 9-42
Reporting Safety Defects (U.S.A.) 9-42
Reporting Safety Defects (Canada) ... 9-43

Service Publications 9-44
Service Publications 9-44

Customer Assistance (U.S.A.)

Your complete and permanent satisfaction is our business. We are here to serve you. All Authorized Mazda Dealers have the knowledge and the tools to keep your Mazda vehicle in top condition.
If you have any questions or recommendations for improvement regarding the service of your Mazda vehicle or servicing by Mazda Dealer personnel, we recommend that you take the following steps:

NOTE
If it becomes necessary to have the components or wiring system for the supplementary restraint system modified to accommodate a person with certain medical conditions in accordance with a certified physician, contact an Authorized Mazda Dealer.

▼STEP 1: Contact Your Mazda Dealer

Discuss the matter with an Authorized Mazda Dealer. This is the quickest and best way to address the issue.

- If your concern has not been resolved by the CUSTOMER RELATIONS, SALES, SERVICE, or PARTS MANAGER, then please contact the GENERAL MANAGER of the dealership or the OWNER.
- If it becomes necessary to have the components or wiring system for the supplementary restraint system modified to accommodate a person with certain medical conditions in accordance with a certified physician, go to STEP 2.

▼STEP 2: Contact Mazda North American Operations

If for any reason you feel the need for further assistance after contacting your dealership management or it becomes necessary to have the components or wiring system for the supplementary restraint system modified to accommodate a person with certain medical conditions in accordance with a certified physician, you can reach Mazda North American Operations by one of the following ways.

Log on: at www.mazdaUSA.com

Answers to many questions, including how to locate or contact a local Mazda dealership in the U.S., can be found here.

E-mail: click on “Contact Us” located on the “Inside Mazda” tab, or at the bottom of the page at www.mazdaUSA.com

By phone at: 1 (800) 222-5500

By letter at:
Attn: Customer Assistance
Mazda North American Operations
7755 Irvine Center Drive
Irvine, CA 92618-2922
P.O. Box 19734
Irvine, CA 92623-9734

In order to serve you efficiently and effectively, please help us by providing the following information:

1. Your name, address, and telephone number
2. Year and model of vehicle
3. Vehicle Identification Number (17 digits, noted on your registration or title or located on the upper driver's side corner of the dash)
4. Purchase date and current mileage
5. Your dealer's name and location
6. Your question(s)

If you live outside the U.S.A., please contact your nearest Mazda Distributor.

▼STEP 3: Contact Better Business Bureau (BBB)

Mazda North American Operations realizes that mutual agreement on some issues may not be possible. As a final step to ensure that your concerns are being fairly considered, Mazda North American Operations has agreed to participate in a dispute settlement program administered by the Better Business Bureau (BBB) system, at no cost to you the consumer.

BBB AUTO LINE works with consumers and the manufacturer in an attempt to reach a mutually acceptable resolution of any warranty related concerns. If the BBB is not able to facilitate a settlement they will provide an informal hearing before an arbitrator.

You are required to resort to BBB AUTO LINE before exercising rights or seeking remedies under the Federal Magnuson-Moss Warranty Act, 15 U.S.C. § 2301 et seq. To the extent permitted by the applicable state “Lemon Law”, you are also required to resort to BBB AUTO LINE before exercising any rights or seeking remedies under the “Lemon Law”. If you choose to seek remedies that are not created by the Magnuson-Moss Warranty Act or the applicable state “Lemon Law”, you are not required to first use BBB AUTO LINE.

Customer Assistance

The whole process normally takes 40 days or less. The arbitration decision is not binding on you or Mazda unless you accept the decision. For more information about BBB AUTO LINE, including current eligibility standards, please call 1-800-955-5100 or visit the BBB website at www.lemonlaw.bbb.org.

Being truly committed to customer satisfaction is more than a phrase with Mazda. We hope to satisfy every customer directly, but if there is ever a question about our decision, Mazda believes in providing a fast, fair and free method such as the BBB AUTO LINE to ensure Mazda delivers on our commitment to do the right thing for our customers!

▼California Customers

1. Mazda North American Operations participates in BBB AUTO LINE, a mediation/arbitration program administered by the Council of Better Business Bureaus [4200 Wilson Boulevard, Arlington, Virginia 22203] through local Better Business Bureaus. BBB AUTO LINE and Mazda have been certified by the Arbitration Certification Program of the California Department of Consumer Affairs.
2. If you have a problem arising under a Mazda written warranty, we encourage you to bring it to our attention. If we are unable to resolve it, you may file a claim with BBB AUTO LINE. Claims must be filed with BBB AUTO LINE within six (6) months after the expiration of the warranty.
3. To file a claim with BBB AUTO LINE, call 1-800-955-5100. There is no charge for the call.
4. In order to file a claim with BBB AUTO LINE, you will have to provide your name and address, the brand name and vehicle identification number (VIN) of your vehicle, and a statement of the nature of your problem or complaint. You will also be asked to provide: the approximate date of your acquisition of the vehicle, the vehicle's current mileage, the approximate date and mileage at the time any problem(s) were first brought to the attention of Mazda or one of our dealers, and a statement of the relief you are seeking.
5. BBB AUTO LINE staff may try to help resolve your dispute through mediation. If mediation is not successful, or if you do not wish to participate in mediation, claims within the program's jurisdiction may be presented to an arbitrator at an informal hearing. The arbitrator's decision should ordinarily be issued within 40 days from the time your complaint is filed; there may be a delay of 7 days if you did not first contact Mazda about your problem, or a delay of up to 30 days if the arbitrator requests an inspection/report by an impartial technical expert or further investigation and report by BBB AUTO LINE.

6. You are required to use BBB AUTO LINE before asserting in court any rights or remedies conferred by California Civil Code Section 1793.22. You are also required to use BBB AUTO LINE before exercising rights or seeking remedies created by Title I of the Magnuson-Moss Warranty Act, 15 U.S.C. sec. 2301 et seq. If you choose to seek redress by pursuing rights and remedies not created by California Civil Code Section 1793.22 or Title I of the Magnuson-Moss Warranty Act, resort to BBB AUTO LINE is not required by those statutes.

7. California Civil Code Section 1793.2 (d) requires that, if Mazda or its representative is unable to repair a new motor vehicle to conform to the vehicle's applicable express warranty after a reasonable number of attempts, Mazda may be required to replace or repurchase the vehicle. California Civil Code Section 1793.22 (b) creates a presumption that Mazda has had a reasonable number of attempts to conform the vehicle to its applicable express warranties if, within 18 months from delivery to the buyer or 18,000 miles on the vehicle's odometer, whichever occurs first, one or more of the following occurs:
   - The same nonconformity [a failure to conform to the written warranty that substantially impairs the use, value or safety of the vehicle] results in a condition that is likely to cause death or serious bodily injury if the vehicle is driven **AND** the nonconformity has been subject to repair two or more times by Mazda or its agents **AND** the buyer or lessee has directly notified Mazda of the need for the repair of the nonconformity; OR
   - The same nonconformity has been subject to repair 4 or more times by Mazda or its agents **AND** the buyer has notified Mazda of the need for the repair of the nonconformity; OR
   - The vehicle is out of service by reason of repair of nonconformities by Mazda or its agents for a cumulative total of more than 30 calendar days after delivery of the vehicle to the buyer.

   NOTICE TO Mazda AS REQUIRED ABOVE SHALL BE SENT TO THE FOLLOWING ADDRESS:
   Mazda North American Operations
   7755 Irvine Center Drive
   Irvine, CA 92618
   ATTN: Customer Mediation

8. The following remedies may be sought in BBB AUTO LINE: repairs, reimbursement for money paid to repair a vehicle or other expenses incurred as result of a vehicle nonconformity, repurchase or replacement of your vehicle, and compensation for damages and remedies available under Mazda's written warranty or applicable law.

9. The following remedies may **not** be sought in BBB AUTO LINE: punitive or multiple damages, attorneys' fees, or consequential damages other than as provided in California Civil Code Section 1794 (a) and (b).

Customer Assistance

10. You may reject the decision issued by a BBB AUTO LINE arbitrator. If you reject the decision, you will be free to pursue further legal action. The arbitrator's decision and any findings will be admissible in a court action.
11. If you accept the arbitrator's decision, Mazda will be bound by the decision, and will comply with the decision within a reasonable time not to exceed 30 days after we receive notice of your acceptance of the decision.
12. Please call BBB AUTO LINE at 1-800-955-5100 for further details about the program.

Customer Assistance (Canada)

▼Satisfaction Review Process

Your complete and permanent satisfaction is of primary concern to Mazda. All Authorized Mazda Dealers have both the knowledge and tools to keep your Mazda in top condition. In our experience, any questions, problems, or complaints regarding the operation of your Mazda or any other general service transactions are most effectively resolved by your dealer. If the cause of your dissatisfaction cannot adequately be addressed by normal dealership procedures, we recommend that you take the following steps:

▼STEP 1: Contact the Mazda Dealer

Discuss the matter with a member of dealership management. If the Service Manager has already reviewed your concerns, contact the owner of the dealership or its General Manager.

▼STEP 2: Contact the Mazda Regional Office

If you feel that you still require assistance, ask the dealer Service Manager to arrange for you to meet the local Mazda Service Representative. If more expedient, contact Mazda Canada Inc.Regional Office nearest you for such arrangements. Regional Office address and phone numbers are shown (page 9-9).

▼STEP 3: Contact the Mazda Customer Relations Department

If still not substantially satisfied, contact the Customer Relations Department, Mazda Canada Inc., 55 Vogell Road, Richmond Hill, Ontario, L4B 3K5 Canada TEL: 1 (800) 263-4680.
Provide the Department with the following information:

1. Your name, address and telephone number
2. Year and model of vehicle
3. Vehicle Identification Number (VIN). Refer to the “Vehicle Identification Labels” page of section 10 of this manual for the location of the VIN.
4. Purchase date
5. Present odometer reading
6. Your dealer's name and location
7. The nature of your problem and/or cause of dissatisfaction

The Department, in cooperation with the local Mazda Service Representative, will review the case to determine if everything possible has been done to ensure your satisfaction.

Customer Assistance

Please recognize that the resolution of service problems in most cases requires the use of your Mazda dealer's service facilities, personnel and equipment. We urge you to follow the above three steps in sequence for most effective results.

▼Mediation/Arbitration Program

Occasionally a customer concern cannot be resolved through Mazda's Customer Satisfaction Program. If after exhausting the procedures in this manual your concern is still not resolved, you have another option.

Mazda Canada Inc. participates in an arbitration program administered by the Canadian Motor Vehicle Arbitration Plan (CAMVAP). CAMVAP will advise you about how your concern may be reviewed and resolved by an independent third party through binding arbitration.

Your complete satisfaction is the goal of Mazda Canada Inc. and our dealers. Mazda's participation in CAMVAP makes a valuable contribution to our achieving that goal. There is no charge for using CAMVAP. CAMVAP results are fast, fair and final as the award is binding on both you and Mazda Canada Inc.

▼Canadian Motor Vehicle Arbitration Plan (CAMVAP)

If a specific item of concern arises, where a solution cannot be reached between an owner, Mazda, and/or one of its dealers (that all parties cannot agree upon), the owner may wish to use the services offered by the Canadian Motor Vehicle Arbitration Plan (CAMVAP).

CAMVAP uses the services of Provincial Administrators to assist consumers in scheduling and preparing for their arbitration hearings. However, before you can proceed with CAMVAP you must follow your Mazda dispute resolution process as outlined previously.

CAMVAP is fully implemented in all provinces and territories.
Consumers wishing to obtain further information about the Program should contact the Provincial Administrator at 1 (800) 207-0685, or by contacting the Canadian Motor Vehicle Arbitration Plan Office at:

Canadian Motor Vehicle Arbitration Plan
235 Yorkland Boulevard, suite 300
North York, Ontario
M2J 4Y8
http://camvap.ca

Provincial Administrators may be reached locally as listed below:

Province/Territory	CAMVAP Number
British Columbia & Yukon Territories	1 (800) 207-0685
Alberta & Northwest Territories	1 (800) 207-0685
Saskatchewan	1 (800) 207-0685
Manitoba	1 (800) 207-0685
Ontario	1 (800) 207-0685
Atlantic Canada	1 (800) 207-0685
Quebec	1 (800) 207-0685

▼Regional Offices

REGIONAL OFFICES	COVERING AREAS
MAZDA CANADA INC. WESTERN REGION 5011 275 STREET LANGLEY, BRITISH COLUMBIA V4W 0A8 (778) 369-2100 1 (800) 663-0908	ALBERTA, BRITISH COLUMBIA, MANITOBA, SASKATCHEWAN, YUKON
MAZDA CANADA INC. CENTRAL REGION 55 VOGELL ROAD, RICHMOND HILL, ONTARIO, L4B 3K5 1 (800) 263-4680	ONTARIO, NEW BRUNSWICK, NOVA SCOTIA, PRINCE EDWARD ISLAND, NEWFOUNDLAND
MAZDA CANADA INC. QUEBEC REGION 6111 ROUTE TRANSCANADIENNE POINTE CLAIRE, QUEBEC H9R 5A5 (514) 694-6390	QUEBEC

Customer Assistance (Puerto Rico)

Your complete and permanent satisfaction is our business. That is why all Authorized Mazda Dealers have the knowledge and the tools to keep your Mazda vehicle in top condition.
If you have any questions or recommendations for improvement regarding the service of your Mazda vehicle or servicing by Mazda Dealer personnel, we recommend that you take the following steps:

▼STEP 1

Discuss the matter with an Authorized Mazda Dealer. This is the quickest and best way to address the issue. If your concern has not been resolved by the CUSTOMER RELATIONS, SALES, SERVICE, or PARTS MANAGER, then please contact the GENERAL MANAGER of the dealership or the OWNER.

▼STEP 2

If, after following STEP 1, you feel the need for further assistance, please contact your area's Mazda representative (Indicated on the next page).

Please help us by providing the following information:

1. Your name, address, and telephone number
2. Year and model of vehicle
3. Vehicle Identification Number (17 digits, noted on your registration or title or located on the upper driver's side corner of the dash)
4. Purchase date and current mileage
5. Your dealer's name and location
6. Your question(s)

Customer Assistance (Mexico)

Your complete and permanent satisfaction is our business. We are here to serve you. All Authorized Mazda Dealers have the knowledge and the tools to keep your Mazda vehicle in top condition.
If you have any questions or recommendations for improvement regarding the service of your Mazda vehicle or servicing by Mazda Dealer personnel, we recommend that you take the following steps:

▼Contact Your Mazda Dealer

Discuss the matter with an Authorized Mazda Dealer. This is the quickest and best way to address the issue.

- If your concern has not been resolved by the CUSTOMER RELATIONS, SALES, SERVICE, or PARTS MANAGER, then please contact the GENERAL MANAGER of the dealership or the OWNER.
- If it becomes necessary to have the components or wiring system for the supplementary restraint system modified to accommodate a person with certain medical condition in accordance with a certified physician you must contact your dealership in order to avoid the potential loss of the warranty of your vehicle which may occur if some third party is hired by the customer to make any modifications to this system.

Log on: at www.MazdaMexico.com.mx

Answers to many questions, including how to locate or contact a local Mazda dealership in Mexico, can be found here.

E-mail: click on “Contactanos” at the top of the page at www.MazdaMexico.com.mx

By phone at: 01 800 01 MAZDA (62932)

By letter at:
Attn: Customer Assistance
Mazda Motor de Mexico
Mario Pani #150, PB Col. Lomas de Santa Fe
Mexico, D.F. C.P. 05300
Del. Cuajimalpa de Morelos
Tel: Customer Assistance
01 800 01 MAZDA (62932).

In order to serve you efficiently and effectively, please help us by providing the following information:

1. Your name, address, and telephone number

Customer Assistance

2. Year and model of vehicle
3. Vehicle Identification Number (17 digits, noted on your registration or title or located on the upper driver's side corner of the dash)
4. Purchase date and current mileage
5. Your dealer's name and location
6. Your question(s)

Importer/Distributor

▼U.S.A.

Mazda North American Operations
7755 Irvine Center Drive
Irvine, CA 92618-2922 U.S.A.
P.O. Box 19734
Irvine, CA 92623-9734 U.S.A.
TEL: 1 (800) 222-5500 (in U.S.A.)
(949) 727-1990 (outside U.S.A.)

▼CANADA

Mazda Canada Inc.
55 Vogell Road, Richmond Hill,
Ontario, L4B 3K5 Canada
TEL: 1 (800) 263-4680 (in Canada)
(905) 787-7000 (outside Canada)

▼PUERTO RICO/U.S. Virgin Island

International Automotive Distributor Group, LLC. (Mazda de Puerto Rico)
P.O. Box 191850, San Juan, Puerto Rico
00919-1850
TEL: (787) 641-1777

▼MEXICO

Mazda Motor de Mexico
Mario Pani # 150, PB Col. Lomas de
Santa Fe Mexico, D.F. C.P. 05300 Del.
Cuajimalpa
TEL: Center of Attention to Clients:
01 (800) 016 2932. in Mexico

▼GUAM

Triple J Motors
157 South Marine Drive, Tamuning,
GUAM 96911 USA
P.O. Box 6066 Tamuning, Guam 96931
TEL: (671) 649-6555

▼SAIPAN

Pacific International Marianas, Inc.
(d.b.a. Midway Motors)
P.O. Box 887 Saipan, MP 96950
TEL: (670) 234-7524

Triple J Saipan, Inc.
(d.b.a. Triple J Motors)
P.O. Box 500487 Saipan, MP 96950-0487
TEL: (670) 234-7133/3051

▼AMERICAN SAMOA

Polynesia Motors, Inc.
P.O. Box 1120, Pago Pago, American
Samoa 96799
TEL: (684) 699-9347

Warranties for Your Mazda

- New Vehicle Limited Warranty
- Powertrain Limited Warranty
- Safety Restraint System Limited Warranty
- Anti-perforation Limited Warranty
- Federal Emission Control Warranty/California Emission Control Warranty
  - Emission Defect Warranty
  - Emission Performance Warranty
- Emission Control Warranty
- Replacement Parts and Accessories Limited Warranty
- Tire Warranty

NOTE

Warranty information varies depending on the country. Refer to the Warranty Booklet for detailed warranty information.

Outside the United States

Government regulations in the United States require that automobiles meet specific emission regulations and safety standards. Therefore, vehicles built for use in the United States may differ from those sold in other countries.

The differences may make it difficult or even impossible for your vehicle to receive satisfactory servicing in other countries. We strongly recommend that you NOT take your Mazda outside the United States. However, in the event that you are moving to Canada permanently, Mazda vehicles built for use in the United States could be eligible for exportation to Canada with specific vehicle modifications to comply with the Canadian Motor Vehicle Safety Standards (CMVSS).

NOTE
The above is applicable for a permanent import/export situation and not related to travelers on vacation.

You may have the following problems if you do take your vehicle outside of the United States:
- Recommended fuel may be unavailable. Any kind of leaded fuel or low-octane fuel will affect vehicle performance and damage the emission controls and engine.
- Proper repair facilities, tools, testing equipment, and replacement parts may not be available.

Please refer to your Manufacturer's Warranty Booklet for more information.

Outside Canada

Government regulations in Canada require that automobiles meet specific emission regulations and safety regulations. Therefore, vehicles built for use in Canada may differ from those sold in other countries.

The differences may make it difficult or even impossible for your vehicle to receive satisfactory servicing in other countries. We strongly recommend that you NOT take your Mazda outside Canada. However, in the event that you are moving to the United States permanently, Mazda vehicles built for use in Canada could be eligible for exportation to the United States with specific vehicle modifications to comply with the United States Federal Motor Vehicle Safety Standards (FMVSS).

NOTE
The above is applicable for a permanent import/export situation and not related to travelers on vacation.

You may have the following problems if you do take your vehicle outside of Canada:
- Recommended fuel may be unavailable. Any kind of leaded fuel or low-octane fuel will affect vehicle performance and damage the emission controls and engine.
- Proper repair facilities, tools, testing equipment, and replacement parts may not be available.

Please refer to your Manufacturer's Warranty Booklet for more information.

Registering Your Vehicle in A Foreign Country (Except United States and Canada)

Registering your vehicle in a foreign country may be problematic depending on whether it meets the specific emission and safety standards of the country in which the vehicle will be driven. Consequently, your vehicle may require modifications at personal expense in order to meet the regulations.
In addition, you should be aware of the following issues:
Satisfactory vehicle servicing may be difficult or impossible in another country.

The fuel specified for your vehicle may be unavailable.

Parts, servicing techniques, and tools necessary to maintain and repair your vehicle may be unavailable.

There might not be an Authorized Mazda Dealer in the country you plan to take your vehicle.

The Mazda warranty is valid only in certain countries.

Add-On Non-Genuine Parts and Accessories

Non-genuine parts and accessories for Mazda vehicles can be found in stores.
These may fit your vehicle, but they are not approved by Mazda for use with Mazda vehicles. When you install non-genuine parts or accessories, they could affect your vehicle's performance or safety systems; the Mazda warranty doesn't cover this. Before you install any non-genuine parts or accessories, consult an Authorized Mazda Dealer.

WARNING

Always consult an Authorized Mazda Dealer before you install non-genuine parts or accessories:

Improperly designed parts or accessories could seriously affect your vehicle's performance or safety systems. This could cause you to have an accident or increase your chances of injuries in an accident.

Be very careful in choosing and installing add-on electrical equipment, such as mobile telephones, two-way radios, stereo systems, and car alarm systems:

Incorrectly choosing or installing improper add-on equipment or choosing an improper installer is dangerous. Essential systems could be damaged, causing engine stalling, air-bag (SRS) activation, ABS/TCS/DSC inactivation, or a fire in the vehicle.

Mazda assumes no responsibility for death, injury, or expenses that may result from the installation of add-on non-genuine parts or accessories.

Cell Phones Warning

WARNING

Please comply with the legal regulations concerning the use of communication equipment in vehicles in your State or Province:

Use of any electrical devices such as cell phones, computers, portable radios, vehicle navigation or other devices by the driver while the vehicle is moving is dangerous. Dialing a number on a cell phone while driving also ties-up the driver's hands. Use of these devices will cause the driver to be distracted and could lead to a serious accident. If a passenger is unable to use the device, pull off the right-of-way to a safe area before use. If use of a cell phone is necessary despite this warning, use a hands-free system to at least leave the hands free to drive the vehicle. Never use a cell phone or other electrical devices while the vehicle is moving and, instead, concentrate on the full-time job of driving.

Event Data Recorder (U.S.A. and Canada)

This vehicle is equipped with an event data recorder (EDR). The main purpose of an EDR is to record, in certain crash or near crash-like situations, such as an air bag deployment or hitting a road obstacle, data that will assist in understanding how a vehicle's systems performed. The EDR is designed to record data related to vehicle dynamics and safety systems for a short period of time, typically 30 seconds or less. The EDR in this vehicle is designed to record such data as:
· How various systems in your vehicle were operating;
· Whether or not the driver and passenger safety belts were buckled/fastened;
· How far (if at all) the driver was depressing the accelerator and/or brake pedal; and,
· How fast the vehicle was traveling.
These data can help provide a better understanding of the circumstances in which crashes and injuries occur.
NOTE:
EDR data are recorded by your vehicle only if a non-trivial crash or near crash-like situation occurs; no data are recorded by the EDR under normal driving conditions and no personal data (e.g., name, gender, age, and crash location) are recorded. However, other parties, such as law enforcement, could combine the EDR data with the type of personally identifying data routinely acquired during a crash investigation.
To read data recorded by an EDR, special equipment is required, and access to the vehicle or the EDR is needed. In addition to the vehicle manufacturer, other parties, such as law enforcement, that have the special equipment, can read the information if they have access to the vehicle or the EDR.

Mazda will not disclose any of the data recorded in an EDR to a third party unless:
- A written agreement from the vehicle owner or the lessee is obtained
- Officially requested by the police or other law enforcement authorities
- Used as a defense for Mazda in a law suit, claim, or arbitration
- Ordered by a judge or court

However, if necessary Mazda will:
- Use the data for research on Mazda vehicle performance, including safety.
- Disclose the data or the summarized data to a third party for research purposes without disclosing vehicle or owner identification information.

Uniform Tire Quality Grading System (UTQGS)

This information relates to the tire grading system developed by the U.S. National Highway Traffic Safety Administration for grading tires by tread wear, traction, and temperature performance.

▼Tread Wear

The tread wear grade is a comparative rating based on the wear rate of the tire when tested under controlled conditions on a specified government test course.
For example, a tire graded 150 would wear one-and-a-half times as well on the government course as a tire graded 100.

The relative performance of tires depends upon the actual conditions of their use, however, and may depart significantly from the norm because of variations in driving habits, service practices and differences in road characteristics and climate.

▼Traction-AA, A, B, C

The traction grades, from highest to lowest, are AA, A, B, and C. These grades represent the tire's ability to stop on wet pavement as measured under controlled conditions on specified government test surfaces of asphalt and concrete. A tire marked C may have poor traction performance.

⚠ WARNING

The traction grade assigned to this tire is based on braking (straight ahead) traction tests and does not include acceleration cornering (turning), hydroplaning, or peak traction characteristics.

▼Temperature-A, B, C

The temperature grades A (the highest), B, and C, represent the tire's resistance to the generation of heat and its ability to dissipate heat when tested under controlled conditions on a specified indoor laboratory test wheel.
Sustained high temperature can cause the material of the tire to degenerate and reduce tire life, and excessive temperatures can lead to sudden tire failure.

Grade C corresponds to a level of performance which all passenger vehicle tires must meet under the Federal Motor Vehicle Safety Standard No. 109. Grades B and A represent higher levels of performance on the laboratory test wheel than the minimum required by law.

Uniform Tire Quality Grading System (UTQGS)

WARNING

Keep your vehicle's tires properly inflated and not overloaded:

Driving with improperly inflated or overloaded tires is dangerous. Excessive speed, underinflation, or excessive loading, either separately or in combination, can cause heat buildup and possible tire failure. The temperature grade for this tire is established for a tire that is properly inflated and not overloaded.

These grades will be added to the sidewalls of passenger vehicle tires over the next several years according to a schedule established by the NHTSA and the tire manufacturers.

The grade of tires available as standard or optional equipment on Mazda vehicles may vary with respect to grade.

ALL PASSENGER VEHICLE TIRES MUST CONFORM TO THESE GRADES AND TO ALL OTHER FEDERAL TIRE-SAFETY REQUIREMENTS.

▼UNIFORM TIRE QUALITY GRADING

Quality grades can be found where applicable on the tire sidewall between tread shoulder and maximum section width.
For example:
TREADWEAR 200 TRACTION AA TEMPERATURE A

UTQGS MARK (example)

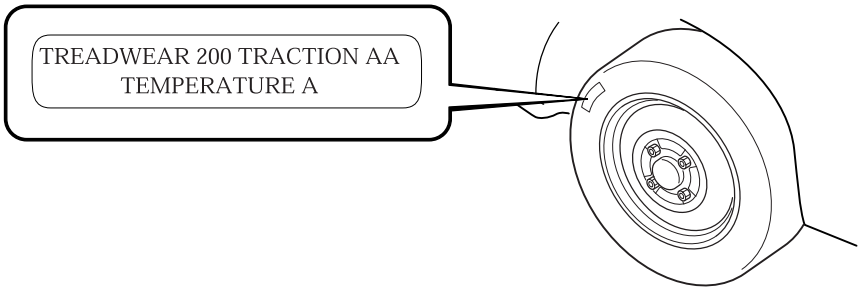

Tire Labeling

Federal law requires tire manufacturers to place standardized information on the sidewall of all tires. This information identifies and describes the fundamental characteristics of the tire and also provides a tire identification number for safety standard certification and in case of a recall.

▼Information on Passenger Vehicle Tires

Please refer to the sample below.

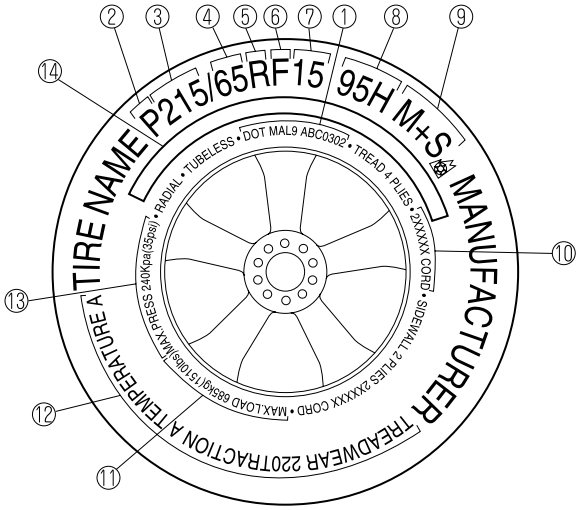

1. TIN: U.S. DOT tire identification number
2. Passenger car tire
3. Nominal width of tire in millimeters
4. Ratio of height to width (aspect ratio)
5. Radial
6. Run-flat tire
7. Rim diameter code
8. Load index & speed symbol
9. Severe snow conditions
10. Tire ply composition and materials used

Tire Information (U.S.A.)

11. Max. load rating
12. Tread wear, traction and temperature grades
13. Max. permissible inflation pressure
14. SAFETY WARNING

P215/65R15 95H is an example of a tire size and load index rating. Here is an explanation of the various components of that tire size and load index rating. Note that the tire size and load index rating may be different from the example.

P

Indicates a tire that may be installed on cars, SUVs, minivans and light trucks as designated by the Tire and Rim Association (T&RA).

NOTE

If your tire size does not begin with a letter this may mean it is designated by either ETRTO (European Tire and Rim Technical Organization) or JATMA (Japan Tire Manufacturing Association).

215

“215” is the nominal width of the tire in millimeters. This three-digit number gives the width in millimeters of the tire from sidewall edge to sidewall edge. In general, the larger the number, the wider the tire.

65

“65” is the aspect ratio. This two-digit number indicates the tire's ratio of height to width.

R

“R” is the tire construction symbol. R indicates “Radial ply construction”.

15

“15” is the wheel rim diameter in inches.

95

“95” is the Load Index. This two-or three-digit number indicates how much weight each tire can support.

H

"H" is the speed rating. The speed rating denotes the maximum speed for which the use of the tire is rated.

Letter Rating	Speed Rating
Q	99 mph
R	106 mph
S	112 mph
T	118 mph
U	124 mph
H	130 mph
V	149 mph
W	168* mph
Y	186* mph

* For tires with a maximum speed capability over 149 mph, tire manufacturers sometimes use the letters ZR. For tires with a maximum speed capability over 186 mph, tire manufacturers always use the letters ZR.

M+ S or M/S: Mud and Snow

AT: All Terrain.
AS: All Season. The "M+ S" or "M/S" indicates that the tire has some functional use in mud and snow.

U.S. DOT Tire Identification Number (TIN)

This begins with the letters "DOT" which indicates the tire meets all federal standards. The next two numbers or letters are the plant code where it was manufactured, and the last four numbers represent the week and year the tire was manufactured. For example, the numbers 457 means the 45st week of 1997. After 2000 the numbers go to four digits. For example, the number 2102 means the 21th week of 2002. The other numbers are marketing codes used at the manufacturer's discretion. This information is used to contact consumers if a tire defect requires a recall.

Tire Ply Composition and Materials Used

The number of plies indicates the number of layers of rubber-coated fabric in the tire. In general, the greater the number of plies, the more weight a tire can support. Tire manufacturers also must indicate the tire materials, which include steel, nylon, polyester, and other.

Maximum Load Rating

This number indicates the maximum load in kilograms and pounds that can be carried by the tire.

Maximum Permissible Inflation Pressure

This number is the greatest amount of air pressure that should ever be put in the tire under normal driving conditions.

Tire Information (U.S.A.)

Tread Wear, Traction and Temperature Grades

Tread wear: The tread wear grade is a comparative rating based on the wear rate of the tire when tested under controlled conditions on a specified government test course. For example, a tire graded 150 would wear one and one-half (1 1/2) times as well on the government course as a tire graded 100.
Traction: The traction grades, from highest to lowest are AA, A, B, and C. The grades represent the tire's ability to stop on wet pavement as measured under controlled conditions on specified government test surfaces of asphalt and concrete. A tire marked C may have poor traction performance.
Temperature: The temperature grades are A (the highest), B and C, representing the tire's resistance to the generation of heat and its ability to dissipate heat when tested under controlled conditions on a specified indoor laboratory test wheel.

Snow Tires

In some heavy snow areas, local governments may require true snow tires, those with very deeply cut tread. These tires should only be used in pairs or placed on all four wheels. Make sure you purchase snow tires that are the same size and construction type as the other tires on your vehicle.

SAFETY WARNING

The following safety warning appears on the tire's sidewall.
SERIOUS INJURY MAY RESULT FROM:

- EXPLOSION OF TIRE/RIM ASSEMBLY DUE TO IMPROPER MOUNTING-MATCH TIRE DIAMETER TO RIM DIAMETER; NEVER EXCEED 40 psi (275 kPa) TO SEAT BEADS-ONLY SPECIALLY TRAINED PERSONS SHOULD MOUNT TIRES.
- TIRE FAILURE DUE TO UNDER-INFLATION/OVERLOADING/DAMAGE-FOLLOW OWNER'S MANUAL AND PLACARD IN VEHICLE-FREQUENTLY CHECK INFLATION PRESSURE AND INSPECT FOR DAMAGE.

▼Information on Temporary Tires

Please refer to the sample below.

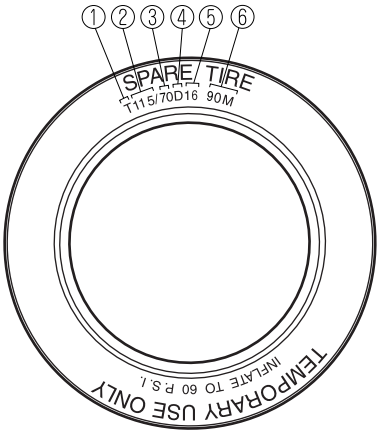

1. Temporary tires
2. Nominal width of tire in millimeters
3. Ratio of height to width (aspect ratio)
4. Diagonal
5. Rim diameter code
6. Load index & speed symbol

T115/70D16 90M is an example of a tire size and load index rating. Here is an explanation of the various components of that tire size and load index rating. Note that the tire size and load index rating may be different from the example.

T

Indicates a tire that may be installed on cars, SUVs, minivans and light trucks as designated by the Tire and Rim Association (T&RA).

115

“115” is the nominal width of the tire in millimeters. This three-digit number gives the width in millimeters of the tire from sidewall edge to sidewall edge. In general, the larger the number, the wider the tire.

Tire Information (U.S.A.)

70

“70” is the aspect ratio. This two-digit number indicates the tire's ratio of height to width.

D

“D” is the tire construction symbol. D indicates “diagonal ply construction”.

16

“16” is the wheel rim diameter in inches.

90

“90” is the Load Index. This two-or three-digit number indicates how much weight each tire can support.

M

“M” is the speed rating. The speed rating denotes the maximum speed for which the use of the tire is rated.

Letter Rating	Speed Rating
M	81 mph

Location of the Tire Label (Placard)

You will find the tire label containing tire inflation pressure by tire size and other important information on the driver's side B-pillar or on the edge of the driver's door frame.

SAMPLE

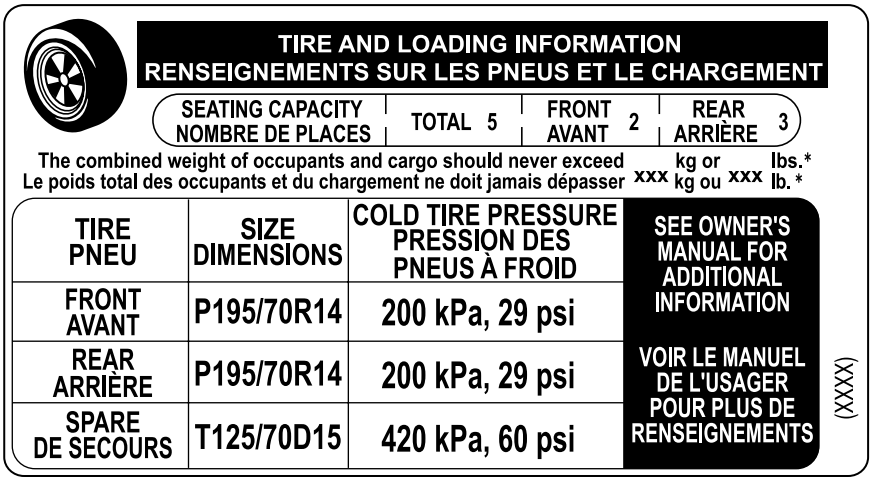

▼Recommended Tire Inflation Pressure

On the tire label you will find the recommended tire inflation pressure in both kPa and psi for the tires installed as original equipment on the vehicle. It is very important that the inflation pressure of the tires on your vehicle is maintained at the recommended pressure. You should check the tire pressure regularly to insure that the proper inflation pressure is maintained.
Refer to Tires on page 10-6.

NOTE
Tire pressures listed on the vehicle placard or tire information label indicate the recommended cold tire inflation pressure, measured when the tires are cold, after the vehicle has been parked for at least 3 hours. As you drive, the temperature in the tire warms up, increasing the tire pressure.

Tire Information (U.S.A.)

WARNING

Always check the tire inflation pressures on a regular basis according to the recommended tire inflation pressure on the tire label and in conjunction with the information in this owner's manual:

Driving your vehicle with under-inflated tires is dangerous.
Under-inflation is the most common cause of failures in any kind of tire and may result in severe cracking, tread separation or "blowout", with unexpected loss of vehicle control and increased risk of injury. Under-inflation increases sidewall flexing and rolling resistance, resulting in heat buildup and internal damage to the tire. It results in unnecessary tire stress, irregular wear, loss of control and accidents. A tire can lose up to half of its air pressure and not appear to be flat!
It is impossible to determine whether or not tires are properly inflated just by looking at them.

▼Checking Tire Pressure

1. When you check the air pressure, make sure the tires are cold —meaning they are not hot from driving even a mile.
2. Remove the cap from the valve on one tire.
3. Firmly press a tire gauge onto the valve.
4. Add air to achieve recommended air pressure.
5. If you overfill the tire, release air by pushing on the metal stem in the center of the valve. Then recheck the pressure with your tire gauge.
6. Replace the valve cap.
7. Repeat with each tire, including the spare.

NOTE
Some spare tires require higher inflation pressure.

8. Visually inspect the tires to make sure there are no nails or other objects embedded that could poke a hole in the tire and cause an air leak.
9. Check the sidewalls to make sure there are no gouges, cuts, bulges, cracks or other irregularities.

NOTE
Warm tires normally exceed recommended pressures. Don't release air from warm tires to adjust the pressure.
Under-inflation can cause serious failures and accidents.
Over-inflation can produce a harsh ride and the greater possibility of damage from road hazards.

▼Glossary of Terms

Tire Placard: A label indicating the OE tire sizes, recommended inflation pressure, and the maximum weight the vehicle can carry.
Tire Identification Number (TIN): A number on the sidewall of each tire providing information about the tire brand and manufacturing plant, tire size, and date of manufacture.
Inflation Pressure: A measure of the amount of air in a tire.
kPa: Kilopascal, the metric unit for air pressure.
psi: Pounds per square inch, the English unit for air pressure.
B-pillar: The structural member at the side of the vehicle behind the front door.
Original Equipment (OE): Describes components originally equipped on the vehicle.
Vehicle Load Limit: The maximum value of the combination weight of occupants and cargo.
Bead Area of the Tire: Area of the tire next to the rim.
Sidewall Area of the Tire: Area between the bead area and the tread.
Tread Area of the Tire: Area on the perimeter of the tire that contacts the road when it's mounted on the vehicle.

Seating capacity means the total allowable number of vehicle occupants. Seating capacity is described on the tire label.

Production options weight is the combination weight of installed regular production options weighing over 2.3 kilograms in excess of the standard items which they replace, and not previously considered in the curb weight or accessory weight, including heavy duty brakes, ride levelers, roof rack, heavy duty battery, and special trim.

Rim is the metal support (wheel) for a tire or a tire and tube assembly upon which the tire beads are seated.

Tire Maintenance

Improper or inadequate vehicle maintenance can cause tires to wear abnormally. Here are some important maintenance points:

▼Tire Inflation Pressure

Inspect all tire pressure monthly (including the spare) when the tires are cold. Maintain recommended pressures for the best ride, top handling, and minimum tire wear. Use the pressures specified on the vehicle tire information placard or tire label for optimum service.

▼Tire Rotation

To equalize tread wear, rotate the tires every 12,000 km (7,500 miles) or sooner if irregular wear develops. During rotation, inspect them for correct balance.

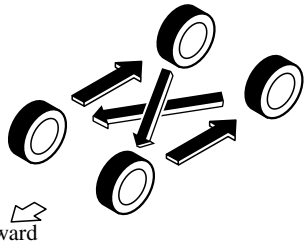

Do not include (TEMPORARY USE ONLY) spare tire in rotation.

Inspect the tires for uneven wear and damage. Abnormal wear is usually caused by one or a combination of the following:
- Incorrect tire pressure
- Improper wheel alignment
- Out-of-balance wheel
- Severe braking

After rotation, inflate all tire pressures to specification (page 10-6) and inspect the lug nuts for tightness.

CAUTION

Rotate unidirectional tires and radial tires that have an asymmetrical tread pattern or studs only from front to rear, not from side to side. Tire performance will be weakened if rotated from side to side.

(With limited-slip differential)
Don't use the following:
- *Tires not of the designated size*
- *Tires of different sizes or types at the same time*
- *Tires not sufficiently inflated*

If these instructions aren't followed, the rotation of the left and right wheels will be different and will thus apply a constant load on the limited-slip differential.
This will cause a malfunction.

▼Replacing a Tire

WARNING

Always use tires that are in good condition:
Driving with worn tires is dangerous. Reduced braking, steering, and traction could result in an accident.

If a tire wears evenly, a wear indicator will appear as a solid band across the tread. Replace the tire when this happens.

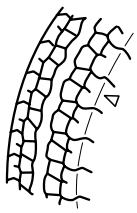

New tread

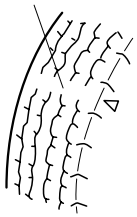

Worn tread

You should replace the tire before the band crosses the entire tread.

Tire Information (U.S.A.)

NOTE

Tires degrade over time, even when they are not being used on the road. It is recommended that tires generally be replaced when they are 6 years or older. Heat caused by hot climates or frequent high loading conditions can accelerate the aging process. You should replace the spare tire when you replace the other road tires due to the aging of the spare tire. The period in which the tire was manufactured (both week and year) is indicated by a 4-digit number.
Refer to Tire Labeling on page 9-23.

▼Safety Practices

The way you drive has a great deal to do with your tire mileage and safety. So cultivate good driving habits for your own benefit.

- Observe posted speed limits and drive at speeds that are safe for the existing weather conditions
- Avoid fast starts, stops and turns
- Avoid potholes and objects on the road
- Do not run over curbs or hit the tire against the curb when parking

⚠ CAUTION

If you feel a sudden vibration or ride disturbance while driving or you suspect your tire or vehicle has been damaged, immediately reduce your speed. Drive with caution until you can safely pull off the road. Stop and inspect the tire for damage. If the tire is under-inflated or damaged, deflate it, remove the tire and rim and replace it with your spare tire. If you cannot detect a cause, have the vehicle towed to the nearest vehicle or tire dealer to have the vehicle inspected.

Vehicle Loading

WARNING

Do not tow a trailer with this vehicle:

Towing a trailer with this vehicle is dangerous because it has not been designed to tow a trailer and doing so will affect the drive system which could result in vehicle damage.

This section will guide you in the proper loading of your vehicle, to keep your loaded vehicle weight within its design rating capability. Properly loading your vehicle will provide maximum return of vehicle design performance. Before loading your vehicle, familiarize yourself with the following terms for determining your vehicle's weight ratings, from the vehicle's Safety Certification Label and Tire and Load Information Label:

WARNING

Overloaded Vehicle:

Overloading a vehicle is dangerous. The results of overloading can have serious consequences in terms of passenger safety. Too much weight on a vehicle's suspension system can cause spring or shock absorber failure, brake failure, handling or steering problems, irregular tire wear, tire failure or other damage. Overloading makes a vehicle harder to drive and control. It also increases the distance required for stopping. In cases of serious overloading, brakes can fail completely, particularly on steep grades. The load a tire will carry safely is a combination of the size of the tire, its load range, and corresponding inflation pressure.

Never overload the vehicle and always observe the vehicle's weight ratings from the vehicle's Safety Certification and Tire and Load Information labels.

Tire Information (U.S.A.)

Base Curb Weight is the weight of the vehicle including a full tank of fuel and all standard equipment. It does not include passengers, cargo, or optional equipment.

Vehicle Curb Weight is the weight of your new vehicle when you picked it up from your dealer plus any aftermarket equipment.

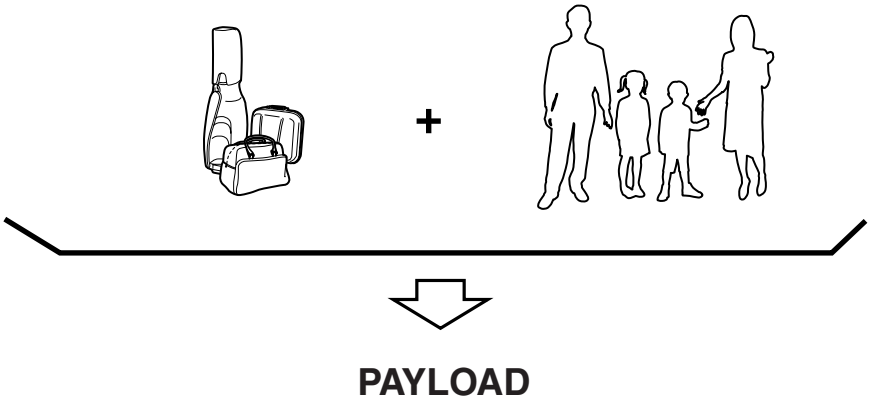

Payload is the combination weight of cargo and passengers that the vehicle is designed to carry. The maximum payload for your vehicle can be found on the Tire and Load Information label on the driver's door frame or door pillar. Look for “THE COMBINATION WEIGHT OF OCCUPANTS AND CARGO SHOULD NEVER EXCEED XXX kg or XXX lbs” for your maximum payload. The payload listed on the tire label is the maximum payload for the vehicle as built by the assembly plant. If any aftermarket or dealer installed equipment has been installed on the vehicle, the weight of the equipment must be subtracted from the payload listed on the tire label in order to be accurate.

SAMPLE

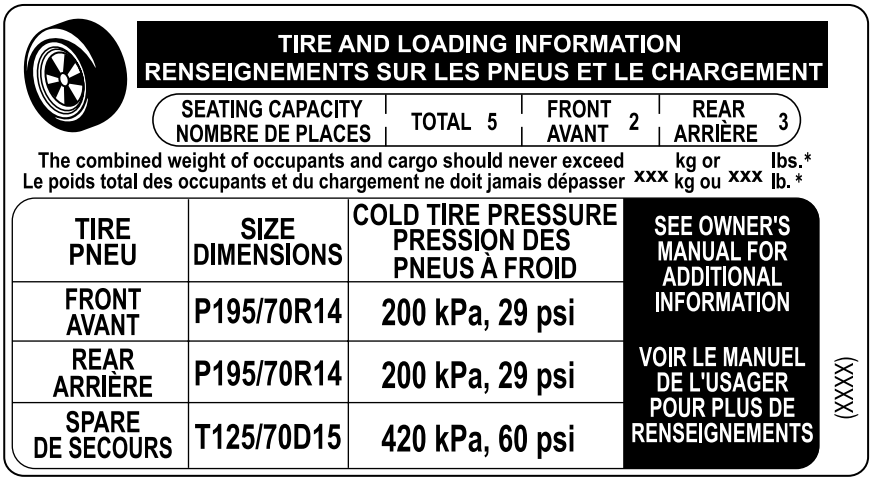

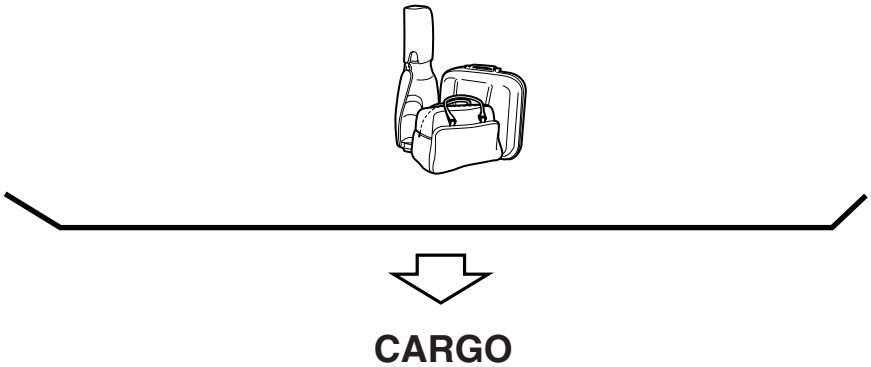

Cargo Weight includes all weight added to the Base Curb Weight, including cargo and optional equipment.

The cargo weight limit decreases depending on the number of vehicle occupants. The cargo weight limit can be calculated by subtracting the total weight of the vehicle occupants from the “combination weight of occupants and cargo should never exceed” value on the tire label.

Tire Information (U.S.A.)

Examples: Based on a single occupant weight of 68 kg (150 lbs), and a value of 385 kg (849 lbs) for the “combination weight of occupants and cargo should never exceed”:
The cargo weight limit with one occupant is 385 kg (849 lbs) – 68 kg (150 lbs) = 317 kg (699 lbs)
The cargo weight limit with two occupants is 385 kg (849 lbs) – (68 × 2) kg ((150 × 2) lbs) = 249 kg (549 lbs)
If the weight of the occupant increases, the cargo weight limit decreases by that much.

GAW (Gross Axle Weight) is the total weight placed on each axle (front and rear) - including vehicle curb weight and all payload.

GAWR (Gross Axle Weight Rating) is the maximum allowable weight that can be carried by a single axle (front or rear). **These numbers are shown on the Safety Compliance Certification Label located on the driver's door frame or door pillar. The total load on each axle must never exceed its GAWR.**

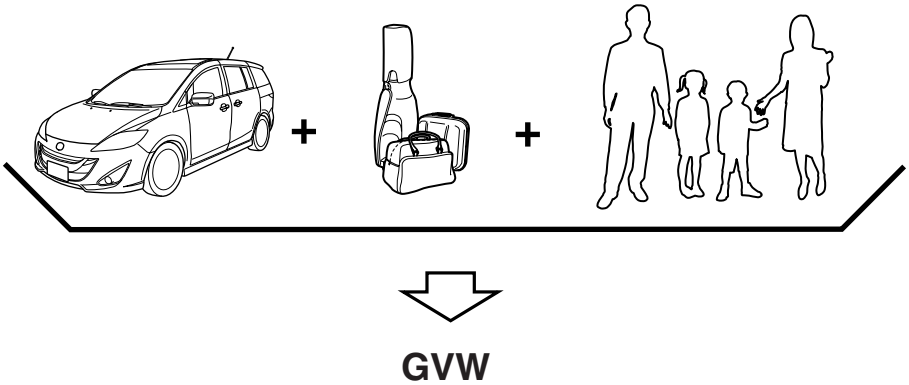

GVW (Gross Vehicle Weight) is the Vehicle Curb Weight + cargo + passengers.

GVWR (Gross Vehicle Weight Rating) is the maximum allowable weight of the fully loaded vehicle (including all options, equipment, passengers and cargo). **The GVWR is shown on the Safety Compliance Certification Label located on the driver's door frame or door pillar. The GVW must never exceed the GVWR.**

Tire Information (U.S.A.)

SAMPLE

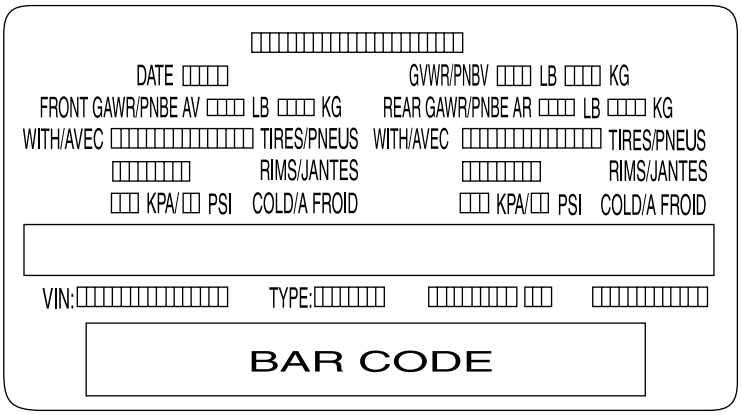

WARNING

Exceeding Axle Weight Rating Limits:

Exceeding the Safety Certification Label axle weight rating limits is dangerous and could result in death or serious injury as a result of substandard vehicle handling, performance, engine, transmission and/or structural damage, serious damage to the vehicle, or loss of control.

Always keep the vehicle within the axle weight rating limits.

Do not tow a trailer with this vehicle:

Towing a trailer with this vehicle is dangerous because it has not been designed to tow a trailer and doing so will affect the drive system which could result in vehicle damage.

Tire Information (U.S.A.)

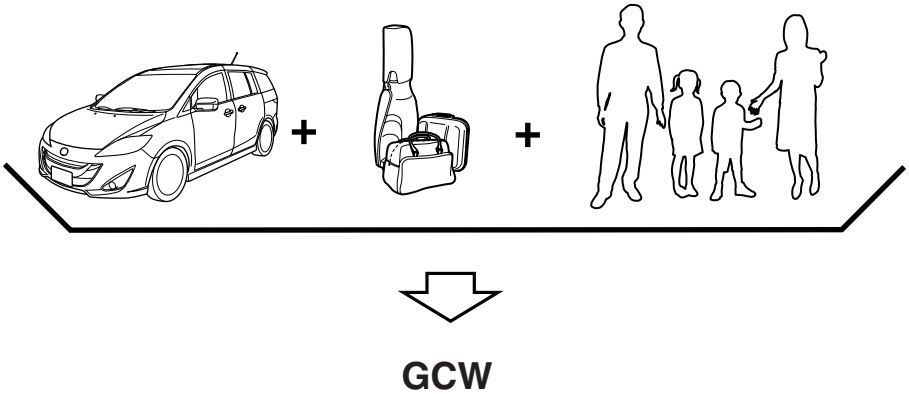

GCW (Gross Combination Weight) is the weight of the loaded vehicle (GVW).

GCWR (Gross Combination Weight Rating) is the maximum allowable weight of the vehicle - including all cargo and passengers - that the vehicle can handle without risking damage. **The GCW must never exceed the GCWR.**

WARNING

Exceeding GVWR or GAWR Specifications:

Exceeding the GVWR or the GAWR specified on the certification label is dangerous. Exceeding any vehicle rating limitation could result in a serious accident, injury, or damage to the vehicle.

Do not use replacement tires with lower load carrying capacities than the originals because they may lower the vehicle's GVWR and GAWR limitations. Replacement tires with a higher limit than the originals do not increase the GVWR and GAWR limitations.

Never exceed the GVWR or the GAWR specified on the certification label.

Steps for Determining the Correct Load Limit

Steps for Determining Correct Load Limit-

(1) Locate the statement “The combined weight of occupants and cargo should never exceed XXX kg or XXX lbs.” on your vehicle's placard.
(2) Determine the combined weight of the driver and passengers that will be riding in your vehicle.
(3) Subtract the combined weight of the driver and passengers from XXX kg or XXX lbs.
(4) The resulting figure equals the available amount of cargo and luggage load capacity. For example, if the “XXX” amount equals 1400 lbs. and there will be five 150 lb passengers in your vehicle, the amount of available cargo and luggage load capacity is 650 lbs. (1400 – 750 (5 × 150) = 650 lbs.)
(5) Determine the combined weight of luggage and cargo being loaded on the vehicle. That weight may not safely exceed the available cargo and luggage load capacity calculated in Step 4.
(6) If your vehicle will be towing a trailer, load from your trailer will be transferred to your vehicle. Consult this manual to determine how this reduces the available cargo and luggage load capacity of your vehicle.

Reporting Safety Defects (U.S.A.)

If you believe that your vehicle has a defect which could cause a crash or could cause injury or death, you should immediately inform the National Highway Traffic Safety Administration (NHTSA) in addition to notifying Mazda Motor Corporation (Your Mazda Importer/Distributor).

If NHTSA receives similar complaints, it may open an investigation, and if it finds that a safety defect exists in a group of vehicles, it may order a recall and remedy campaign. However, NHTSA cannot become involved in individual problems between you, your dealer, or Mazda Motor Corporation (Your Mazda Importer/Distributor).

To contact NHTSA, you may call the Vehicle Safety Hotline toll-free at 1-888-327-4236 (TTY:1-800-424-9153); go to http://www.safercar.gov; or write to: Administrator, NHTSA, 1200 New Jersey Avenue, SE., Washington, DC, 20590. You can also obtain other information about motor vehicle safety from http://www.safercar.gov.

NOTE
If you live in the U.S.A., all correspondence to Mazda Motor Corporation should be forwarded to:

Mazda North American Operations
7755 Irvine Center Drive
Irvine, California 92618-2922
or
P.O. Box 19734
Irvine, CA 92623-9734
Customer Experience Center or toll free at 1 (800) 222-5500

If you live outside of the U.S.A., please contact the nearest Mazda Distributor shown (page 9-13) in this booklet.

Reporting Safety Defects (Canada)

Canadian customers who wish to report a safety-related defect to Transport Canada, Defect Investigations and Recalls, may telephone the toll free hotline 1-800-333-0510, or contact Transport Canada by mail at: Transport Canada, ASFAD, Place de Ville Tower C, 330 Sparks Street, Ottawa ON K1A 0N5.

For additional road safety information, please visit the Road Safety website at: http://www.tc.gc.ca/roadsafety/menu.htm

Service Publications

Factory-authorized Mazda service publications are available for owners who wish to do some of their own maintenance and repair.

When requesting any of our publications through an Authorized Mazda Dealer, refer to the chart below.

If they do not have what you need in stock, they can order it for you.

PUBLICATION ORDER NUMBER	PUBLICATION DESCRIPTION
9999-95-012B-15	2015 WORKSHOP MANUAL (English)
9999-MX-012B-15	2015 WORKSHOP MANUAL (Spanish)
9999-95-074G-15	2015 WIRING DIAGRAM (English)
9999-MX-074G-15	2015 WIRING DIAGRAM (Spanish)
9999-95-005C-15	2015 OWNER'S MANUAL (English)
9999-EC-005C-15	2015 OWNER'S MANUAL (English and French)
9999-PR-005C-15	2015 OWNER'S MANUAL (Spanish)
9999-95-MODL-15	2015 SERVICE HIGHLIGHTS

▼WORKSHOP MANUAL:

Covers recommended maintenance and repair procedures of the drive train, body and chassis.

▼WIRING DIAGRAM:

Provides electrical schematics as well as component location for the entire electrical system.

▼OWNER'S MANUAL:

This booklet contains information regarding the proper care and operation of your vehicle. This is not a technician's manual.

▼SERVICE HIGHLIGHTS:

Provides description and operation of the many systems of your Mazda.

10 Specifications

Technical information about your Mazda.

Identification Numbers **10-2**
Vehicle Information Labels 10-2

Specifications **10-4**
Specifications 10-4

Personalization Features **10-8**
Personalization Features 10-8

Identification Numbers

Vehicle Information Labels

▼Vehicle Identification Number

The vehicle identification number legally identifies your vehicle. The number is on a plate attached to the cowl panel located on the left corner of the dashboard. This plate can easily be seen through the windshield.

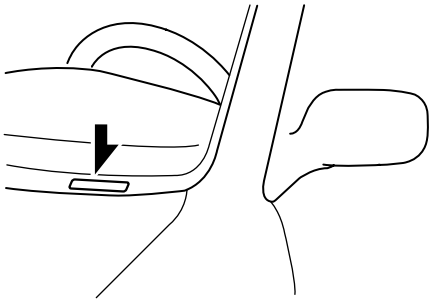

▼Motor Vehicle Safety Standard Label*

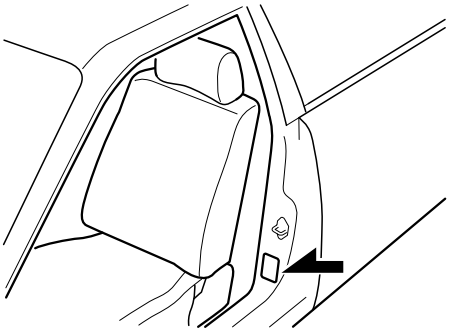

▼Chassis Number

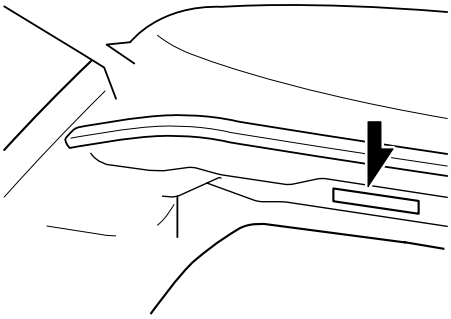

▼Vehicle Emission Control Information Label*

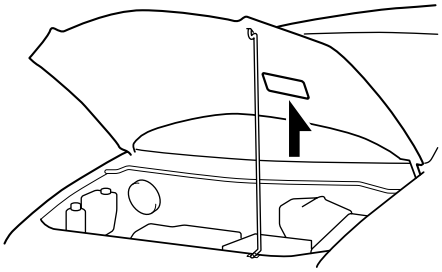

▼Tire Pressure Label

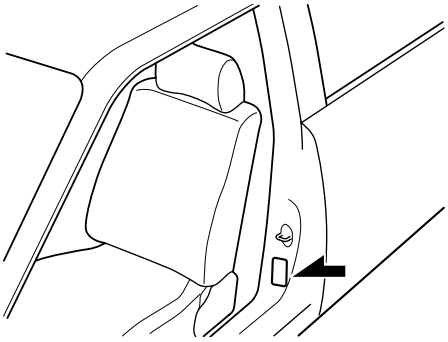

 *Some models.

▼Engine Number

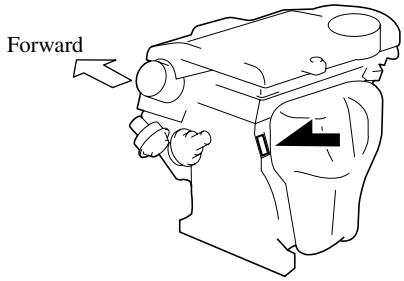

Specifications

Specifications

▼Engine

Item	Specification
Type	DOHC-16V in-line, 4-cylinder
Bore × Stroke	89.0 × 100 mm (3.50 × 3.94 in)
Displacement	2,488.5 ml (2,488.5 cc)
Compression ratio	9.7

▼Electrical System

Item	Classification	
Battery	12V-60Ah/20HR or 12V-65Ah/20HR	
Spark-plug number	Mazda Genuine spark plug	LFJD-18-110 or L3Y2-18-110

⚠ CAUTION

When cleaning the iridium plugs, do not use a wire brush. The fine particulate coating on the iridium alloy and platinum tips could be damaged.

▼Lubricant Quality

Lubricant	Classification	
Engine oil	Refer to Recommended Oil on page 8-20.	
Manual transaxle oil	API Service	GL-4
	SAE	75W-80
Automatic transaxle fluid	Mazda Genuine ATF M-V	
Power steering fluid	Mazda Genuine ATF M-III , M-V, or equivalent (e.g. Dexron® II)	
Brake/Clutch fluid	SAE J1703 or FMVSS116 DOT-3	

NOTE

Refer to Introduction on (page 8-2) for owner's responsibility in protecting your investment.

Specifications

▼Capacities

(Approximate Quantities)

Item			Capacity
Engine oil	With oil filter replacement		5.0 L (5.3 US qt, 4.4 Imp qt)
	Without oil filter replacement		4.6 L (4.9 US qt, 4.0 Imp qt)
Coolant	U.S.A. and Canada	Manual transaxle	6.7 L (7.1 US qt, 5.9 Imp qt)
		Automatic transaxle	6.6 L (7.0 US qt, 5.8 Imp qt)
	Except U.S.A. and Canada		6.8 L (7.2 US qt, 6.0 Imp qt)
Manual transaxle oil			2.85 L (3.01 US qt, 2.51 Imp qt)
Automatic transaxle fluid			8.14 L (8.60 US qt, 7.16 Imp qt)
Fuel tank			60.0 L (15.9 US gal, 13.2 Imp gal)

Check oil and fluid levels with dipsticks or reservoir gauges.

▼Dimensions

Item	Vehicle specification
Overall length	4,585 mm (180.5 in)
Overall width	1,750 mm (68.9 in)
Overall height	1,615 mm (63.6 in)
Front tread	1,530 mm (60.2 in)
Rear tread	1,520 mm (59.8 in)
Wheelbase	2,750 mm (108.3 in)

▼Weights

(Manual transaxle)

Item		Weight
GVWR (Gross Vehicle Weight Rating)		2,091 kg (4,610 lb)
GAWR (Gross Axle Weight Rating)	Front	1,021 kg (2,251 lb)
	Rear	1,085 kg (2,392 lb)

(Automatic transaxle)

Item		Weight
GVWR (Gross Vehicle Weight Rating)		2,125 kg (4,685 lb)
GAWR (Gross Axle Weight Rating)	Front	1,056 kg (2,328 lb)
	Rear	1,084 kg (2,390 lb)

Specifications

▼Air Conditioner

Item	Classification
Refrigerant Type	HFC134a (R-134a)

▼Light Bulbs

Exterior light

Light bulb			Category	
			Wattage	UNECE*1 (SAE)
Headlights	High beam		65	HB3 (9005)
	Low beam	Halogen	55	H11 (H11)
		Xenon fusion	35	D2S (D2S)
Front turn signal lights/Parking lights (Front side-marker lights)			27/8	— (1157NA)
Fog lights*			55	H11 (H11)
Side turn signal lights*			LED*2	— (—)
High-mount brake light			LED*2	— (—)
Rear turn signal lights			21	WY21W (7443NA)
Brake lights/Taillights (Rear side-marker lights)			21/5	W21/5W (7443)
Reverse lights			21	W21W (7440)
License plate lights			5	W5W (—)

*1 UNECE stands for United Nations Economic Commission for Europe.
*2 LED is the abbreviation for Light Emitting Diode.

Interior light

Light bulb	Category	
	Wattage	UNECE*1
Luggage compartment light	8	—
Overhead lights (Front)/Map lights	5	W5W
Overhead light (Rear)	10	—

*1 UNECE stands for United Nations Economic Commission for Europe.

▼Tires

NOTE
The tires have been optimally matched with the chassis of your vehicle.
When replacing tires, Mazda recommends that you replace tires of the same type originally fitted to your vehicle. For details, contact an Authorized Mazda Dealer.

 *Some models.

Check the tire pressure label for tire size and inflation pressure.
Refer to Tire Inflation Pressure on page 8-37.

Standard tire

Tire size	Inflation pressure	
	Front	Rear
P205/55R16 89H	240 kPa (35 psi)	240 kPa (35 psi)
205/50R17 89V	230 kPa (34 psi)	230 kPa (34 psi)

Temporary tire

Tire size	Inflation pressure
T125/70D16 96M	420 kPa (60 psi)

Lug nut tightening torque

When installing a tire, tighten the lug nut to the following torque.
88—118 N·m (9—12 kgf·m, 65—87 ft·lbf)

▼Fuses

Refer to Fuses on page 8-50.

Personalization Features

Personalization Features

The following “Personalization Features” are available. These settings can only be changed by an Authorized Mazda Dealer.

Item	Feature	Factory Setting	Available Settings
Key reminder warning alarm	The volume of the key reminder warning alarm can be changed	High	Low
Lights-on reminder warning alarm	The volume of the lights-on reminder warning alarm can be changed	High	Low/Deactivated
Turn indicator	The beep volume level can be changed	High	Low/Deactivated
Illumination entry	The time required for the interior lamp to turn off automatically after all the doors are closed can be changed	15 seconds	7.5/30/60 seconds
	The time required for the interior lamp to illuminate after unlocking any door can be changed	30 seconds	7.5/15/60 seconds
	The function that allows the interior lamp to illuminate automatically when the doors are unlocked can be changed	Activated	Deactivated
	The function allowing the interior lamp to turn off automatically when any door is opened (or not securely closed) can be changed	Activated	Deactivated
	The time required for the interior lamp to turn off automatically can be changed (prevents battery depletion when a door is open/ajar)	30 minutes	10/60 minutes
Keyless entry	The unlocking method using the retractable key can be changed	Press × 2	Press × 1
	The time required for the doors to relock automatically after unlocking with the transmitter can be changed	30 seconds	60/90 seconds
	The flashing of the hazard warning lights when the doors are locked/unlocked can be changed	Activated	Deactivated
	The function allowing the horn to sound automatically when the doors are locked by pressing the transmitter two times consecutively can be changed	Activated	Deactivated
Auto headlight on/off	The headlight illumination on/off timing based on surrounding lightness/darkness can be changed	Standard (Illuminates under average levels of darkness)	Earlier/ Somewhat earlier/ Somewhat later/ Later
Two-step down power window	The two-step down power window function can be changed	Activated	Deactivated

11 Index

Index

A

Accessory Socket 6-109
Add-On Non-Genuine Parts and Accessories 9-18
Air Bag Systems 2-46
Ambient Temperature Display 6-96
Antenna 6-11
Anti-Lock Brake System (ABS) 5-8
  Warning light 5-8
Appearance Care 8-56
Audio System 6-11
  Audio control switch 6-47
  Audio set 6-23
  AUX/USB/iPod Mode 6-50
  Operating tips for audio system 6-12
  Safety certification 6-59
Automatic Transaxle
  Driving tips 5-19
  Fluid 8-25
  Manual shift mode 5-15
  Shift-lock override 5-14
  Shift-lock system 5-14
  Transaxle ranges 5-13

B

Battery
  Emergency starting 7-16
  Maintenance 8-32
  Replacement 8-36
  Specifications 10-4
Beep Sounds
  Ignition key reminder 5-58
  Lights-on reminder 5-58
  Seat belt warning 5-58
  Tire inflation pressure warning ... 5-58

B

Before Starting the Engine 4-5
  After getting in 4-5
  Before getting in 4-5
Bluetooth® Audio 6-60
Bluetooth® Hands-Free 6-70
  Basic Bluetooth® Hands-Free operation 6-74
  Convenient use of the hands-free system 6-79
  Hands-free setting 6-85
  Mazda Bluetooth® Hands-Free customer service 6-92
  Safety certification 6-92
  When Bluetooth® Hands-Free cannot be used 6-91
Body Lubrication 8-27
Bottle Holder 6-101
Brake/Clutch
  Fluid 8-24
Brakes
  Anti-lock brake system (ABS) 5-8
  Brakes assist 5-9
  Foot brake 5-5
  Parking brake 5-6
  Warning light 5-7
Break-In Period 4-6
Bulb Replacement 8-42

C

Capacities 10-5
Carbon Monoxide 4-4
Cargo Securing Loops 6-107
Cargo Sub-Compartment 6-107
Catalytic Converter 4-3
Cell Phones 9-19
Center Console 6-104

Index

C

Child Restraint
Child restraint precautions 2-30
Child-restraint system installation position 2-35
Installing child-restraint systems 2-36
LATCH child-restraint systems 2-43
Child Safety Locks for Rear Doors ... 3-13
Climate Control System 6-2
Gas specifications 10-6
Clock 6-96
Cruise Control 5-21
Cup Holder 6-100
Customer Assistance 9-2

D

Dashboard Illumination 5-43
Daytime Running Lights 5-63
Defogger
Mirror 5-69
Rear window 5-69
Dimensions 10-5
Door Locks 3-9
Driving In Flooded Area 4-10
Driving on Uneven Road 4-11
Driving Tips 4-6
Automatic transaxle 5-19
Break-in period 4-6
Driving in flooded area 4-10
Driving on uneven road 4-11
Hazardous driving 4-7
Rocking the vehicle 4-8
Saving fuel and protection of the environment 4-6
Winter driving 4-8

D

Dynamic Stability Control (DSC) 5-25
DSC OFF indicator light 5-26
DSC OFF switch 5-26
TCS/DSC indicator light 5-26

E

Emergency Starting 7-16
Flooded engine 7-16
Jump-starting 7-17
Push-starting 7-21
Emergency Towing 7-22
Emission Control System 4-3
Engine
Coolant 8-22
Exhaust gas 4-4
Hood release 3-21
Oil 8-20
Overheating 7-14
Engine Compartment Overview 8-19
Engine Coolant
Overheating 7-14
Event Data Recorder 9-20
Exhaust Gas 4-4
Exterior Care 8-58

F

Flasher
Hazard warning 5-70
Headlights 5-59
Flat Tire 7-3
Changing 7-7
Spare tire and tool storage 7-3
Fluids
Classification 10-4
Owner maintenance 8-16
Fog Lights 5-64

Index

F

Foot Brake 5-5
Front Seats 2-2
Fuel
  Filler lid and cap 3-20
  Gauge 5-42
  Requirements 4-2
  Tank capacity 10-5
Fuses 8-50
  Panel description 8-53
  Replacement 8-50

G

Gauges 5-40
Glove Compartment 6-104

H

Hazard Warning Flasher 5-70
Hazardous Driving 4-7
Head Restraint 2-14
Headlights
  Control 5-59
  Flashing 5-62
  High-low beam 5-62
  Leveling 5-62
  On reminder 5-62
Hood Release 3-21
Horn 5-70

I

Ignition
  Keys 3-2
  Switch 5-2
Illuminated Entry System 6-93
Immobilizer System 3-25

I

Indicator Lights 5-44
  Cruise 5-55
  DSC OFF 5-55
  Headlight high-beam 5-54
  Low engine coolant
  temperature 5-55
  Power steering malfunction 5-56
  Security 5-54
  Shift position 5-54
  TCS/DSC 5-55
  Turn signal/hazard warning 5-56
Information Display 6-95
  Ambient temperature display 6-96
  Audio display 6-96
  Climate control display 6-96
  Clock 6-96
  Information display functions 6-95
  Trip computer 6-97
Instrument Cluster 5-40
Interior Care 8-63
Interior Lights 6-93

J

Jump-Starting 7-17

K

Keyless Entry System 3-3
Keys 3-2

L

Label Information 10-2
Lane-Change Signals 5-63
Liftgate 3-14

Index

L

Light Bulbs
Replacement 8-42
Specifications 10-6
Lighting Control 5-59
Lubricant Quality 10-4
Luggage Compartment Light 6-94

M

Maintenance
Introduction 8-2
Owner maintenance precautions 8-17
Owner maintenance schedule 8-16
Scheduled 8-4
Manual Transaxle Operation 5-10
Recommendations for shifting.... 5-11
Map Lights 6-94
Meters and Gauges 5-40
Mirror Defogger 5-69
Mirrors
Outside mirrors 3-32
Rearview mirror 3-33
Moonroof 3-23

O

Odometer and Trip Meter 5-41
Outside Mirrors 3-32
Overhead Lights 6-94
Overheating 7-14
Overloading 4-10

P

Paint Damage 8-56
Parking Brake 5-6
Parking in an Emergency 7-2

P

Parking Sensor System 5-34
Park assist sensor switch 5-36
Parking sensor warning beep 5-38
Sensor detection range 5-36
Personalization Features 10-8
Power Door Locks 3-11
Power Steering 5-20
Fluid 8-24
Power steering malfunction indicator light 5-20
Power Windows 3-17
Push-Starting 7-21

R

Rear Coat Hooks 6-108
Rear Door Child Safety Locks 3-13
Rear Window Defogger 5-69
Rear Window Washer 5-68
Rear Window Wiper 5-68
Rearview Mirror 3-33
Recreational Towing 7-25
Registering Your Vehicle in A Foreign Country 9-17
Rocking the Vehicle 4-8

S

Safety Defects, Reporting 9-42
Saving Fuel and Protection of the Environment 4-6

Index

S

Seat Belt System
3-point type 2-22
Automatic locking 2-21
Emergency locking 2-20
Extender 2-27
Pregnant women 2-20
Pretensioner and load limiting 2-24
Seat belt precautions 2-18
Seat belt reminder 2-29
Warning light 2-28
Seats
Front seat 2-2
Head restraint 2-14
Seat arrangements 2-12
Seat warmer 2-16
Second-row seats 2-5
Third-row seat 2-10
Second-Row Seats 2-5
Security System
Immobilizer system 3-25
Theft-deterrent system 3-29
Service Publications 9-44
Spare Tire and Tool Storage 7-3
Specifications 10-4
Speedometer 5-41
SRS Air Bags
Driver and front passenger occupant classification system 2-61
How the SRS air bags work 2-54
Limitations to SRS air bag 2-59
Monitoring and maintenance 2-66
SRS air bag deployment criteria 2-58
SRS Air Bags
Supplemental restraint system (SRS) precautions 2-46

S

SRS Air Bags
Supplemental restraint system components 2-52
Steering Wheel 3-32
Horn 5-70
Storage Box 6-105
Storage Compartments 6-102
Cargo securing loops 6-107
Cargo sub-compartment 6-107
Center console 6-104
Glove compartment 6-104
Rear coat hooks 6-108
Storage box 6-105
Underseat storage 6-104
Sunshade 3-24
Sunvisors 6-93

T

Tachometer 5-42
Temporary Spare Tire 8-39
Theft-Deterrent System 3-29
Third-Row Seat 2-10
Tiedown
Hook 7-23
Tire Information 9-23
Tire Pressure Monitoring System 5-28
System error activation 5-32
Tire pressure monitoring system warning light 5-30
Tires and wheels 5-32

Index

T

Tires
- Flat tire 7-3
- Inflation pressure 8-37
- Replacement 8-39
- Rotation 8-38
- Snow tires 4-9
- Spare tire and tool storage 7-3
- Specifications 10-6
- Tire chains 4-9
- Uniform tire quality grading system (UTQGS) 9-21

Tool 7-3
Towing
- Description 7-22
- Emergency towing 7-22
- Hook 7-23
- Recreational towing 7-25
- Trailer towing 4-12

Traction Control System (TCS) 5-24
- TCS/DSC indicator light 5-25

Trailer Towing 4-12
Trip Meter 5-41
Turn and Lane-Change Signals 5-63

U

Underseat Storage 6-104

V

Vanity Mirrors 6-93
Vehicle Information Labels 10-2

W

Warning Lights 5-44
- ABS 5-47
- Air bag system 5-50
- Automatic transaxle 5-51
- Brake system 5-46
- Charging system 5-48
- Check engine 5-49
- Check fuel cap 5-50
- Door-ajar 5-51
- Engine oil pressure 5-48
- Front seat belt pretensioner system 5-50
- High engine coolant temperature 5-49
- Low fuel 5-50
- Low washer fluid level 5-51
- Malfunction 5-47
- Seat belt 5-51
- Tire pressure monitoring system 5-52

Warranty 9-14
Washer Fluid 8-26
Weights 10-5
Wheel Replacement 8-40
Windows
- Power windows 3-17

Windshield Washer 5-68
Windshield Wipers 5-65
- Blades replacement 8-28

Winter Driving 4-8