REMOVAL

1. **DRAIN DIFFERENTIAL OIL (See page DF-10)**
2. **REMOVE TAILPIPE ASSEMBLY**
   (a) Remove the tailpipe (see page EX-2).
3. **REMOVE CENTER EXHAUST ASSEMBLY**
   (a) Remove the center pipe (see page EX-2).
4. **REMOVE PROPELLER WITH CENTER BEARING SHAFT ASSEMBLY (See page PR-3)**
5. **REMOVE REAR DIFFERENTIAL CARRIER SUB-ASSEMBLY (See page DF-18)**
6. **REMOVE REAR DIFFERENTIAL SIDE GEAR SHAFT OIL SEAL**
   (a) Using a SST, tap out the 2 oil seals.
   SST 09308-00010

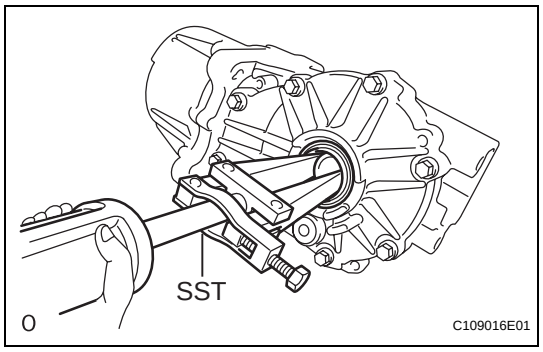

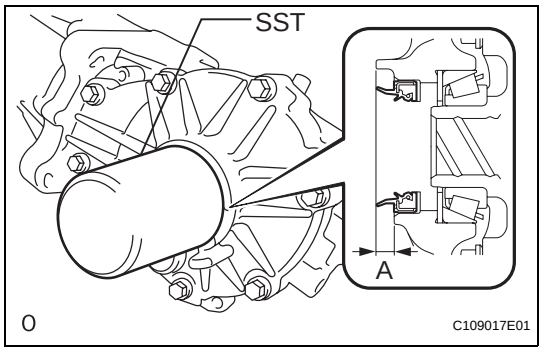

INSTALLATION

1. **INSTALL REAR DIFFERENTIAL SIDE GEAR SHAFT OIL SEAL**
   (a) Apply a light coat of MP grease to the lip of a new rear differential side gear shaft oil seal.
   (b) Using SST and a hammer, tap the 2 rear differential side gear shaft oil seals into the rear differential carrier and differential side bearing retainer according to the specification.
   SST 09223-00010
   Standard oil seal tapping amount (A value):
   7.2 +-0.5 mm (0.28 +-0.02 in.)
2. **INSTALL REAR DIFFERENTIAL CARRIER ASSEMBLY (See page DF-44)**
3. **TEMPORARILY INSTALL PROPELLER WITH CENTER BEARING SHAFT ASSEMBLY (See page PR-5)**
4. **TIGHTEN PROPELLER WITH CENTER BEARING SHAFT ASSEMBLY (See page PR-6)**
5. **INSPECT AND ADJUST JOINT ANGLE (See page PR-4)**
6. **INSTALL CENTER EXHAUST PIPE ASSEMBLY**
   (a) Install the center pipe (see page EX-5).
7. **INSTALL TAILPIPE ASSEMBLY**
   (a) Install the tailpipe (see page EX-6).
8. **ADD DIFFERENTIAL OIL**
   (a) Add differential oil (see page DF-3).

9. CHECK FOR DIFFERENTIAL OIL LEAKAGE

10. CHECK FOR EXHAUST GAS LEAKAGE

If gas is leaking, tighten the areas necessary to stop the leak. Replace damaged parts as necessary.

DF

REMOVAL

1. DRAIN DIFFERENTIAL OIL

2. REMOVE REAR WHEEL

3. REMOVE TAILPIPE ASSEMBLY

(a) Remove the tailpipe (see page EX-2).

4. REMOVE CENTER EXHAUST PIPE ASSEMBLY

(a) Remove the center pipe (see page EX-2).

5. REMOVE PROPELLER WITH CENTER BEARING SHAFT ASSEMBLY (See page PR-3)

6. REMOVE REAR SUSPENSION MEMBER BRACE LH

(a) Remove the 2 bolts and brace from the suspension member.

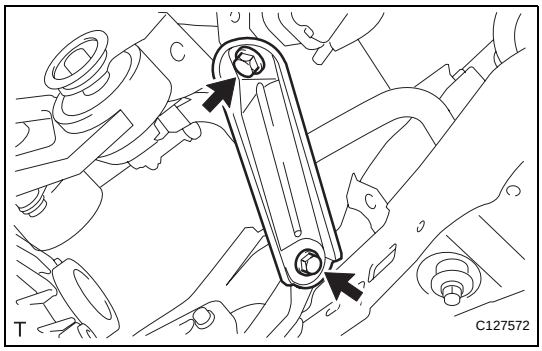

7. REMOVE REAR SUSPENSION MEMBER BRACE RH

HINT:
Use the same procedures described for the LH side.

8. REMOVE REAR DIFFERENTIAL CARRIER SUB-ASSEMBLY

(a) Disconnect the harness clamp.

(b) Remove the breather tube.

(c) Disconnect the connector.

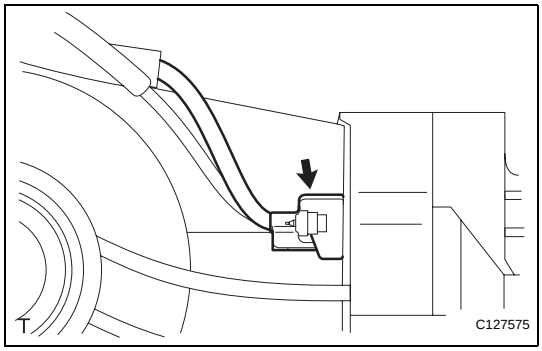

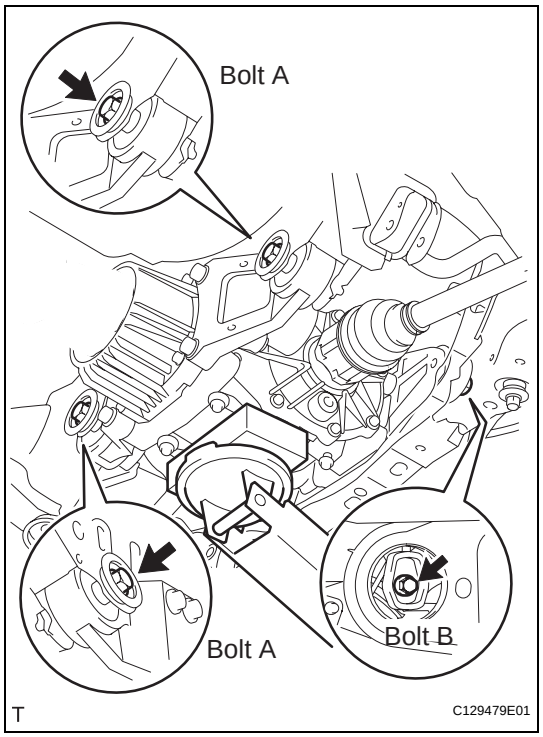

(d) Support the rear differential carrier with a transmission jack or equivalent.

(e) Fix the nuts in place and remove bolt A, bolt B and bolt C.

NOTICE:

Do not loosen the nuts. Loosen the bolts.

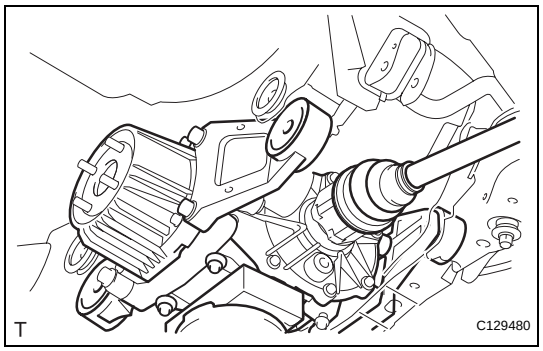

(f) Slowly lower the jack and then tilt the rear differential carrier.

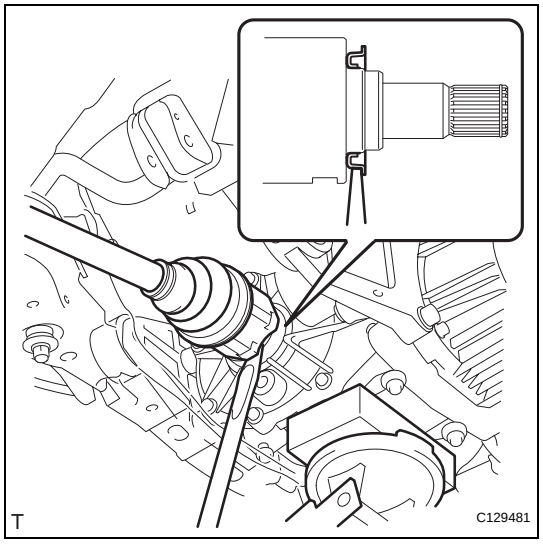

(g) Set the tip of the tire lever to the position on the rear drive shaft inboard joint shown in the illustration. Then, using the ribbed part of the rear differential carrier as a fulcrum, disconnect the left and right rear drive shafts.

NOTICE:

Do not scratch the rear drive shaft dust cover.

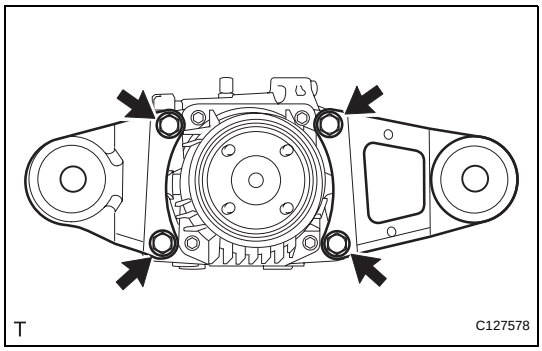

9. REMOVE REAR DIFFERENTIAL NO. 1 AND NO. 2 SUPPORT

(a) Remove the 4 bolts and differential No. 1 and No. 2 supports from the differential carrier.

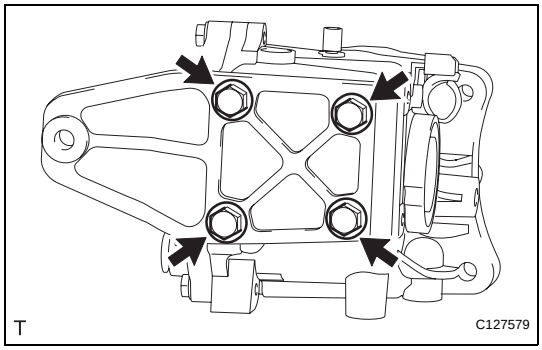

10. REMOVE REAR DIFFERENTIAL SUPPORT

(a) Remove the 4 bolts and differential support from the differential carrier.

DISASSEMBLY

1. FIX DIFFERENTIAL CARRIER SUB-ASSEMBLY

(a) Fix the rear differential carrier in place with the overhaul attachment.

2. REMOVE STUD BOLT

(a) Remove the 4 stud bolts from the transmission coupling.

3. REMOVE DIFFERENTIAL DRAIN PLUG

(a) Using a 10 mm socket hexagon wrench, remove the rear differential drain plug and gasket.

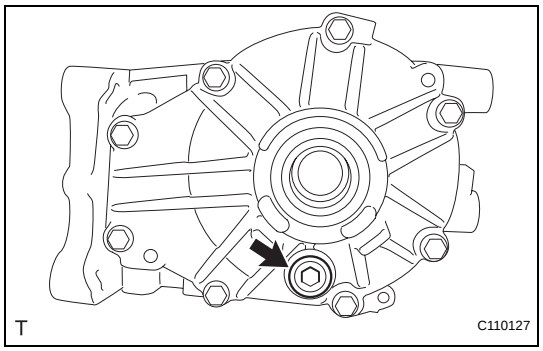

4. REMOVE DIFFERENTIAL FILLER PLUG

(a) Using a 10 mm socket hexagon wrench, remove the rear differential filler plug and gasket.

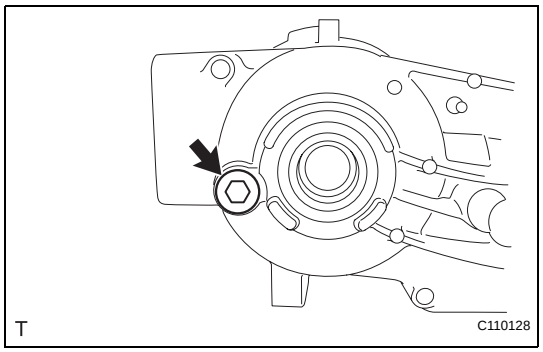

5. REMOVE DIFFERENTIAL CARRIER COVER PLUG

(a) Using an 8 mm socket hexagon wrench, remove rear differential carrier cover plug.

6. REMOVE DIFFERENTIAL CARRIER COVER BREATHER PLUG

(a) Using a chisel and hammer, slightly lift up the rear differential carrier cover breather plug.

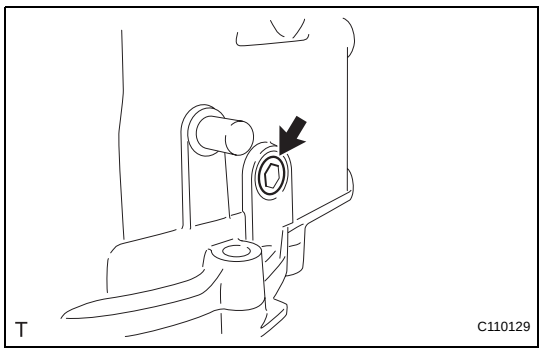

(b) Using a screwdriver, lightly pry up and remove the rear differential carrier cover breather plug.

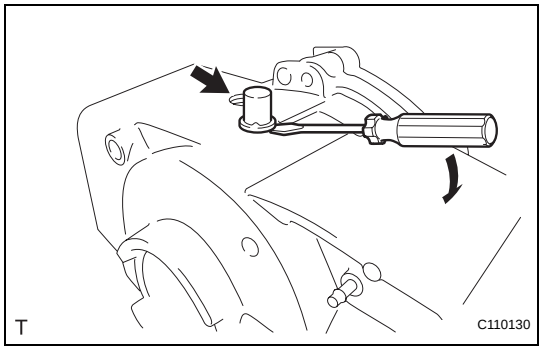

DF

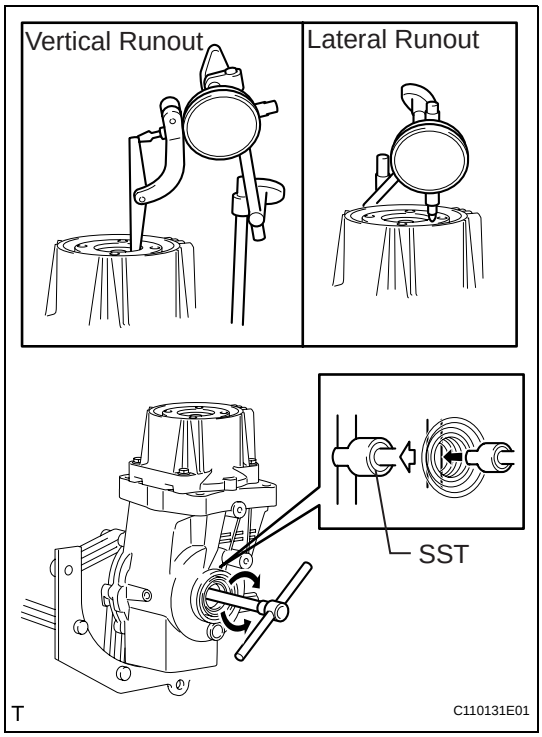

7. INSPECT RUNOUT OF TRANSMISSION COUPLING ASSEMBLY

(a) Install a dial gauge so that it is perpendicular to the inner side of the transmission coupling.

(b) Using SST, rotate the transmission coupling assembly forward and backward and measure the vertical runout.
SST 09564-32011
Maximum vertical runout :
0.06 mm (0.0024 in.)

(c) Install a dial gauge perpendicularly onto the transmission coupling assembly, as shown in the illustration.

(d) Using SST, rotate the transmission coupling assembly forward and backward and measure the lateral runout.
SST 09564-32011
Maximum lateral runout:
0.07 mm (0.0028)

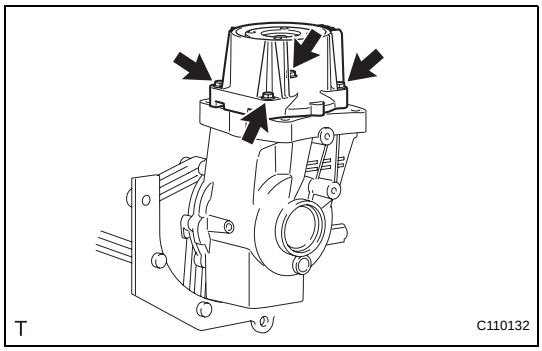

8. REMOVE ELECTROMAGNETIC COUPLING

(a) Remove the 4 bolts and, using a plastic-faced hammer, lightly tap the rear differential carrier cover to remove it from the rear differential carrier.
NOTICE:
Set the brass bar on the ribbed part of the rear differential carrier cover.

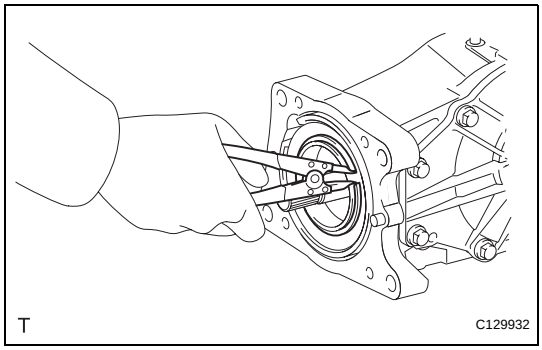

9. REMOVE 4WD LINEAR SOLENOID

(a) Using a snap ring expander, remove the snap ring.

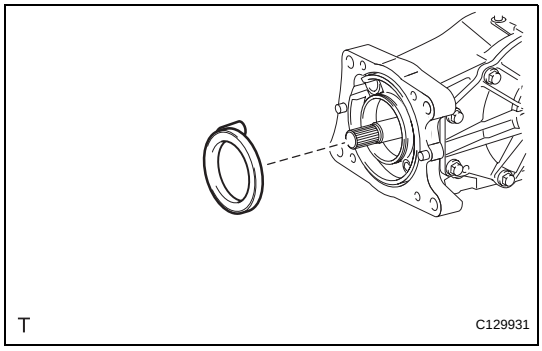

(b) Remove the solenoid from the yoke.

(c) Remove the O-ring from the solenoid.

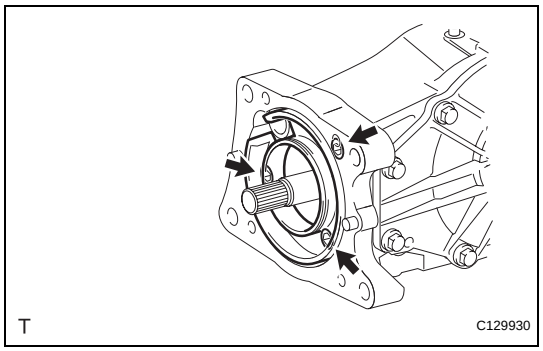

10. REMOVE YOKE

(a) Using a 5 mm socket hexagon wrench, remove the 3 bolts and yoke from the differential carrier.

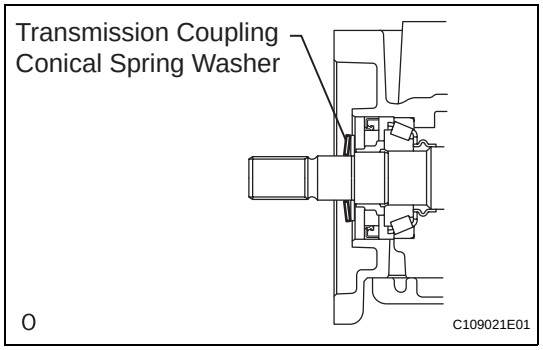

11. REMOVE TRANSMISSION COUPLING CONICAL SPRING WASHER

(a) Remove the spring washer from the differential carrier.

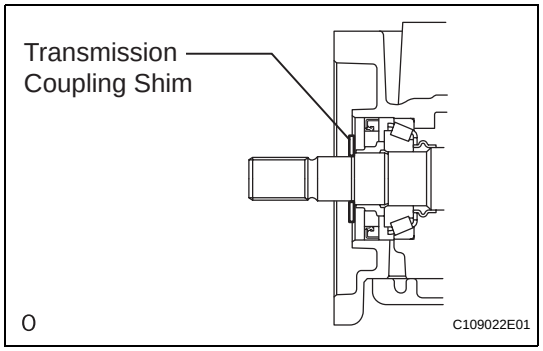

12. REMOVE TRANSMISSION COUPLING SHIM

(a) Remove the shim from the differential carrier.

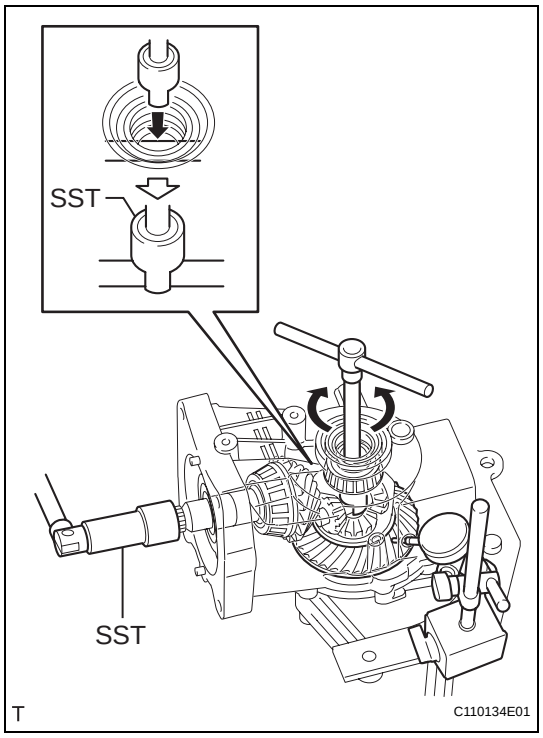

13. INSPECT DIFFERENTIAL RING GEAR BACKLASH

(a) Insert a dial gauge through the rear differential carrier cover plug hole, and set it perpendicular to the ring gear tooth surface's tip.

(b) Using SST, fix the drive pinion in place.
SST 09556-16011

(c) Using SST, rotate the rear differential case forward and backward, and measure the backlash.
SST 09564-32011
Standard backlash:
0.09 to 0.16 mm (0.0034 to 0.0063 in.)
NOTICE:
Measure at 3 or more areas around the circumference of the ring gear.

DF

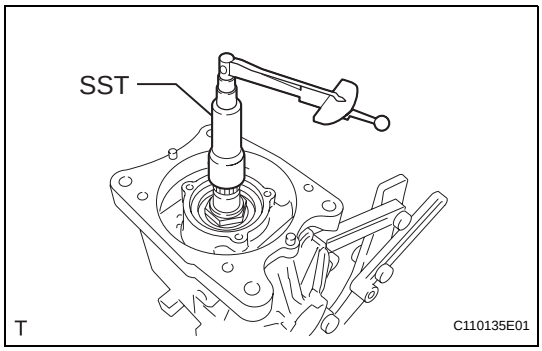

14. INSPECT DIFFERENTIAL DRIVE PINION PRELOAD

(a) Using SST and a torque wrench, inspect the preload (starting torque) within the differential drive pinion and differential ring gear backlash area.
SST 09556-16011
Standard drive pinion preload:
0.24 to 0.37 N*m (2 to 4 kgf*cm, 2 to 3 in.*lbf)
NOTICE:
For a more accurate measurement, rotate the case bearing forward and backward before measuring.

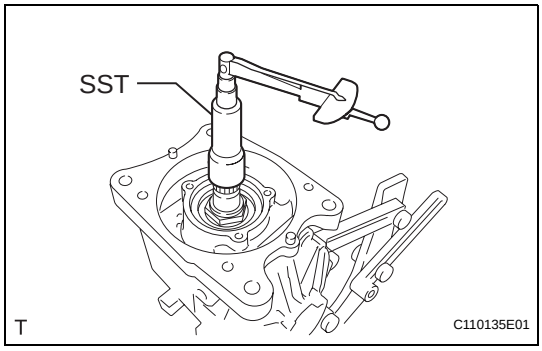

15. INSPECT TOTAL PRELOAD

(a) Using SST and a torque wrench, inspect the preload (starting torque) with the teeth of the differential drive pinion and differential ring gear in contact.
SST 09556-16011
Standard total preload:
Standard drive pinion preload plus 0.99 to 1.63 N*m (10 to 17 kgf*cm, 9 to 14 in.*lbf)
NOTICE:
For a more accurate measurement, rotate the case bearing forward and backward before measuring.

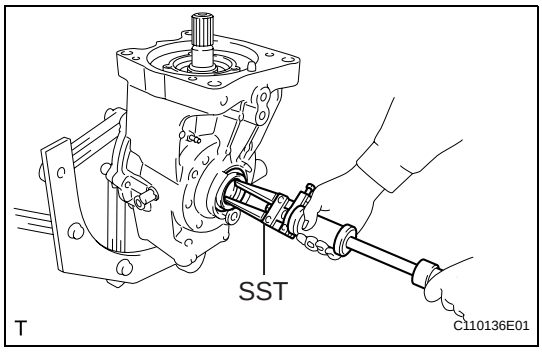

16. REMOVE DIFFERENTIAL SIDE GEAR SHAFT OIL SEAL

(a) Using SST, tap out the 2 rear differential side shaft gear oil seals from the rear differential carrier.
SST 09308-00010

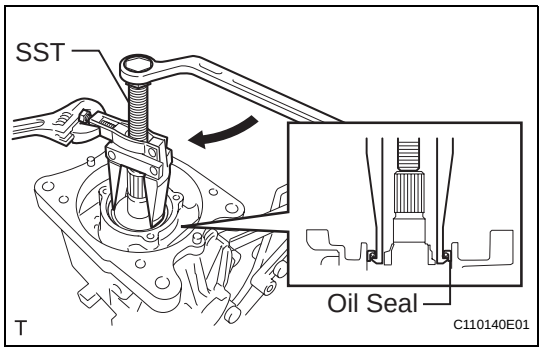

17. REMOVE DIAPHRAGM OIL SEAL

(a) Using SST, remove the diaphragm oil seal from the rear differential carrier.
SST 09308-10010

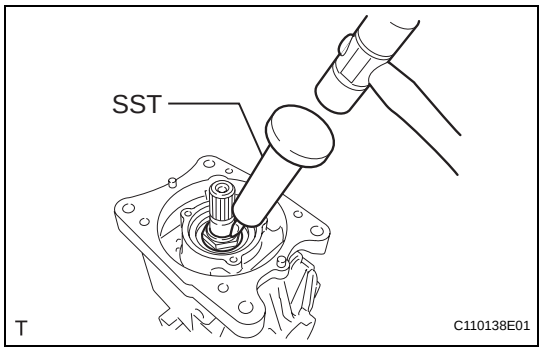

18. REMOVE DRIVE PINION NUT

(a) Using SST and a hammer, unstake the rear drive pinion nut.
SST 09930-00010
NOTICE:
- **Use SST with the tapered part against the shaft side.**
- **Do not modify the SST tip with a grinder or equivalent.**
- **Fully unstake the rear drive pinion nut**

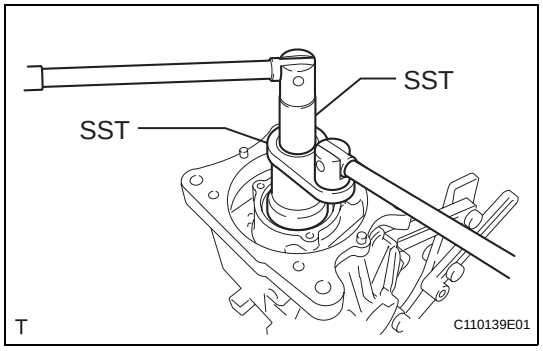

(b) Using SST, fix the differential drive pinion in place and remove the rear drive pinion nut from the differential drive pinion.
SST 09556-16011, 09564-16020

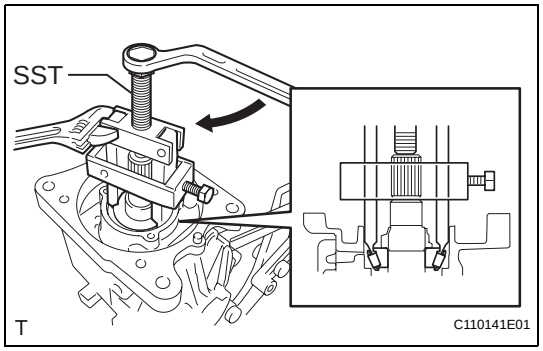

19. REMOVE REAR DRIVE PINION FRONT TAPERED ROLLER BEARING

(a) Using SST, remove the rear drive pinion tapered roller bearing front (inner race) from the rear differential carrier.
SST 09556-30010

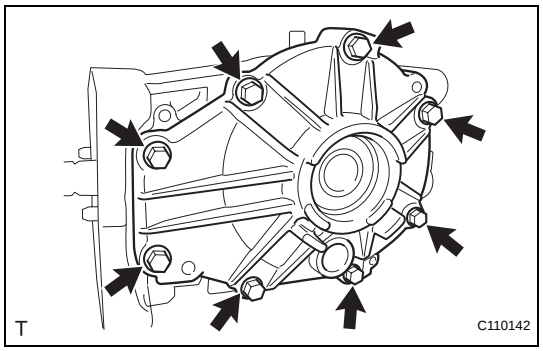

20. REMOVE DIFFERENTIAL SIDE BEARING RETAINER

(a) Remove the 8 bolts.

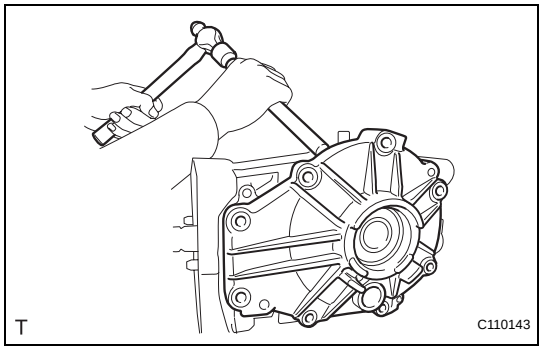

(b) Using a brass bar and hammer, lightly tap out the differential side bearing retainer.
NOTICE:
Set the brass bar on the ribbed part of the differential side bearing retainer.

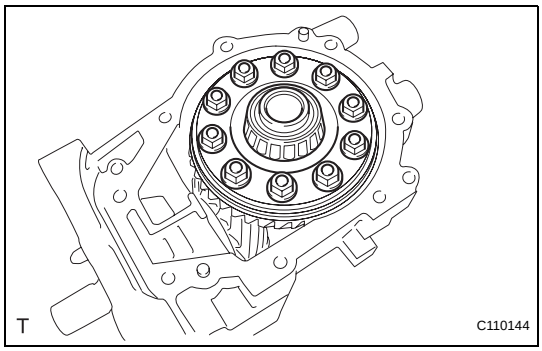

21. REMOVE DIFFERENTIAL CASE SUB-ASSEMBLY

(a) Remove the rear differential case from the rear differential carrier.

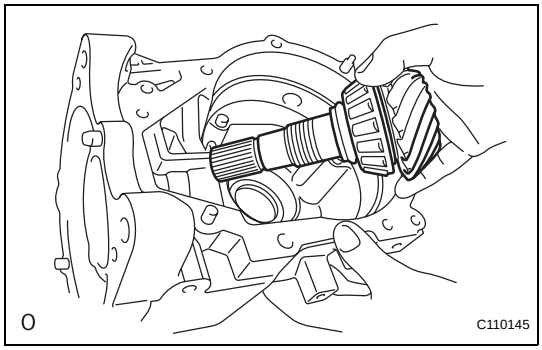

22. REMOVE DIFFERENTIAL DRIVE PINION

(a) Remove the differential drive pinion from the rear differential carrier.

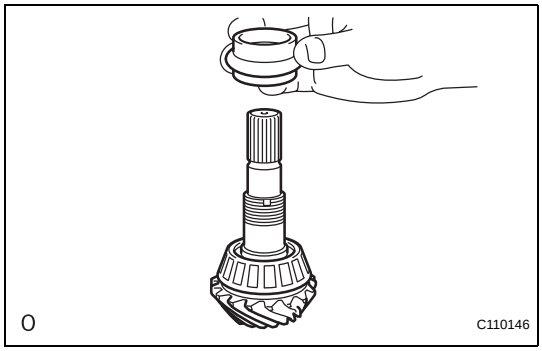

23. REMOVE DIFFERENTIAL DRIVE PINION BEARING SPACER

(a) Remove the rear differential drive pinion bearing spacer from the differential drive pinion.

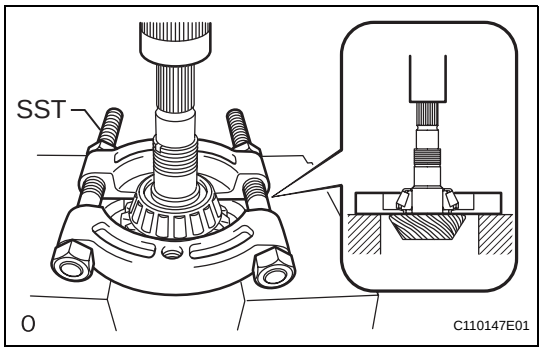

24. REMOVE REAR DRIVE PINION REAR TAPERED ROLLER BEARING

(a) Using SST and a press, press out the rear drive pinion tapered roller bearing rear (inner race) from the differential drive pinion.
SST 09950-00020
NOTICE:
If the rear differential drive pinion or differential ring gear is damaged, replace them both.

(b) Remove the rear differential drive pinion washer.

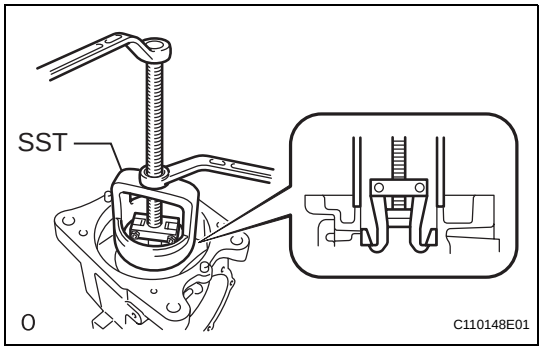

25. REMOVE REAR DRIVE PINION FRONT TAPERED ROLLER BEARING

(a) Using SST, remove the rear drive pinion tapered roller bearing front (outer race) from the rear differential carrier.
SST 09612-65014 (09612-01020, 09612-01050)

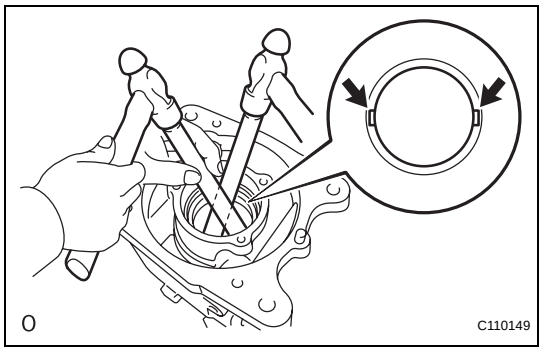

26. REMOVE REAR DRIVE PINION REAR TAPERED ROLLER BEARING

(a) Using a brass bar and hammer, lightly and uniformly tap out the rear drive pinion tapered roller bearing rear (outer race).

NOTICE:
Set the brass bar on the notch.

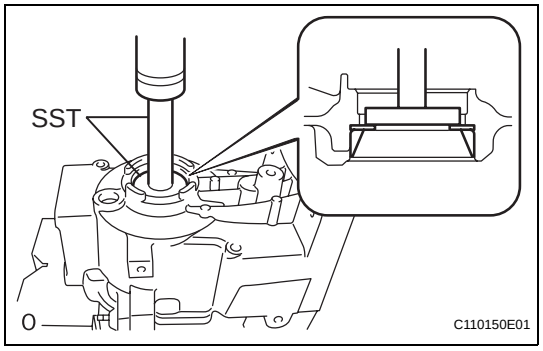

27. REMOVE DIFFERENTIAL CASE BEARING

SST 09950-60010 (09951-00460), 09950-70010 (09951-07100), 09649-17010 (09951-00510)

(a) Using SST and a press, press out the rear differential case bearing RH (outer race) and rear differential side gear shaft plate washer from the rear differential carrier.

SST 09950-60010, 09950-70010 (09951-07100)

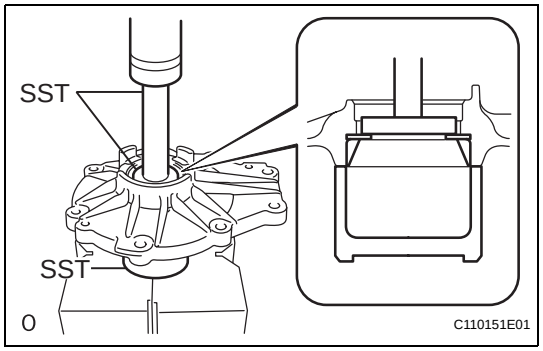

(b) Using SST and a press, press out the rear differential case bearing LH (outer race) and rear differential side gear shaft plate washer from the differential side bearing retainer.

SST 09950-60010 (09951-00460), 09950-70010 (09951-07100), 09649-17010

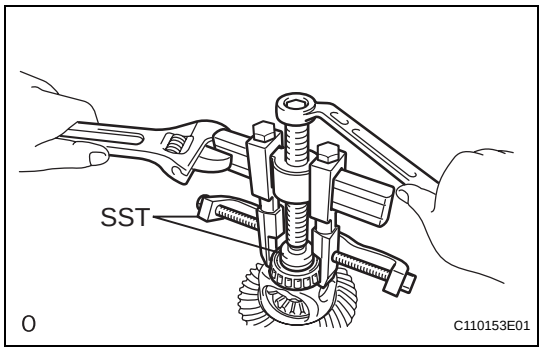

28. REMOVE DIFFERENTIAL CASE BEARING

(a) Using SST, remove the rear differential case bearing RH (inner race) from the rear differential case.

SST 09950-40011 (09951-04010, 09952-04010, 09953-04020, 09954-04010, 09955-04061, 09957-04010, 09958-04011), 09950-60010 (09951-00320, 09955-04071)

NOTICE:
Before using SST center bolt (09953-04020), apply hypoid gear oil to its threads and tip.

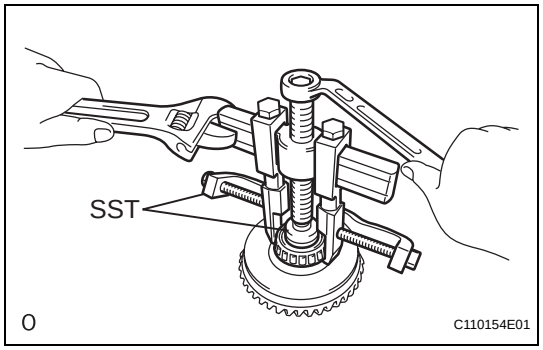

(b) Using SST, remove the rear differential case bearing LH (inner race) from the rear differential case.

SST 09950-40011 (09951-04010, 09952-04010, 09953-04020, 09954-04010, 09955-04071, 09957-04010, 09958-04011), 09950-60010 (09951-00320)

NOTICE:
Before using SST center bolt (09953-04020), apply hypoid gear oil to its threads and tip.

HINT:
If the race is remains on the rear differential case, repeat the step above to remove the race.

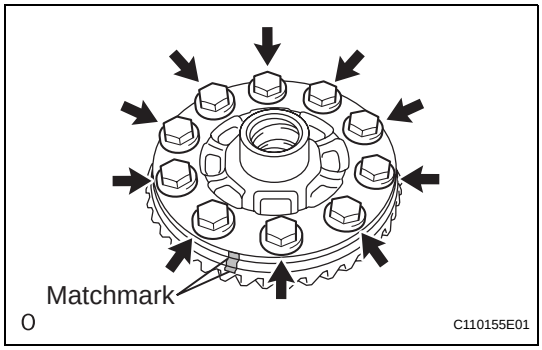

29. REMOVE DIFFERENTIAL RING GEAR

(a) Place matchmarks on the rear differential case and differential ring gear.
(b) Remove the 10 bolts.
(c) Using a plastic-faced hammer, lightly tap the outer circumference of the differential ring gear to remove it from the rear differential case.

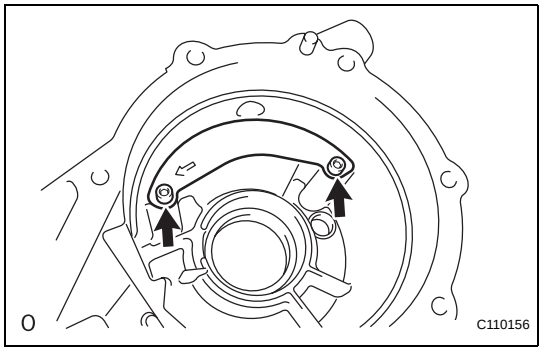

30. REMOVE DIFFERENTIAL BREATHER PLUG OIL DEFLECTOR

(a) Using a 5 mm socket hexagon wrench, remove the 2 bolts and rear differential breather plug oil deflector.

31. REMOVE STRAIGHT PIN

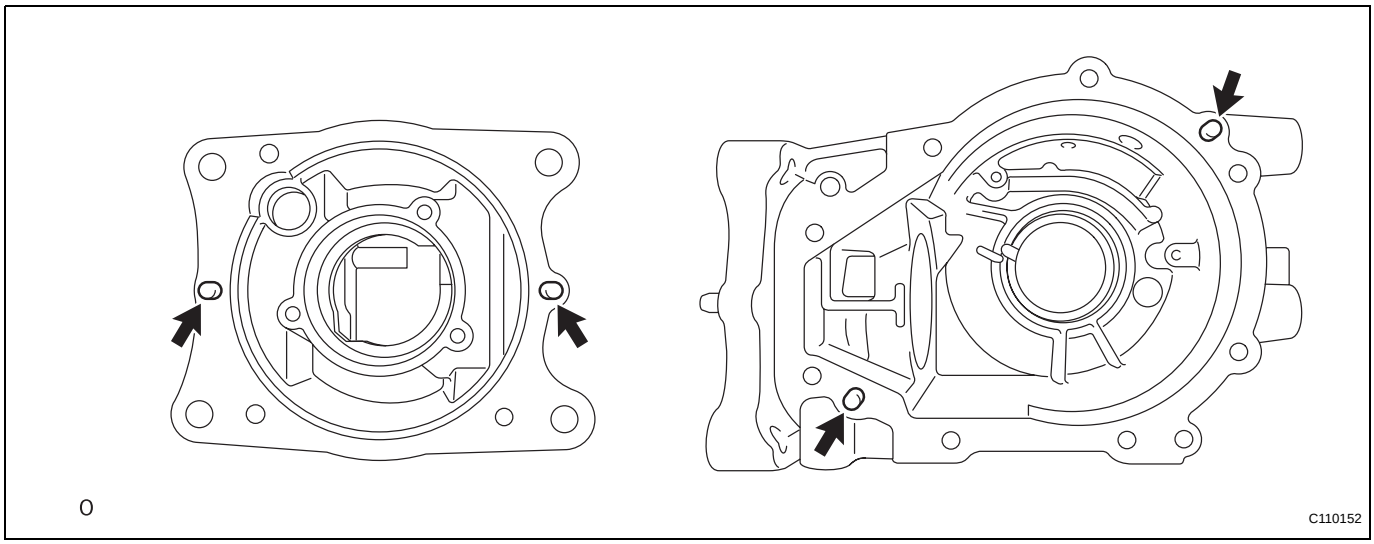

(a) Using pliers, remove the 4 straight pins from the rear differential carrier.

32. REMOVE ELBOW TUBE

33. REMOVE WIRING HARNESS CLAMP BRACKET

(a) Remove the bolt and bracket.

REASSEMBLY

1. INSTALL WIRING HARNESS CLAMP BRACKET

(a) Install the bracket with the bolt.

2. INSTALL ELBOW TUBE

3. INSTALL STRAIGHT PIN

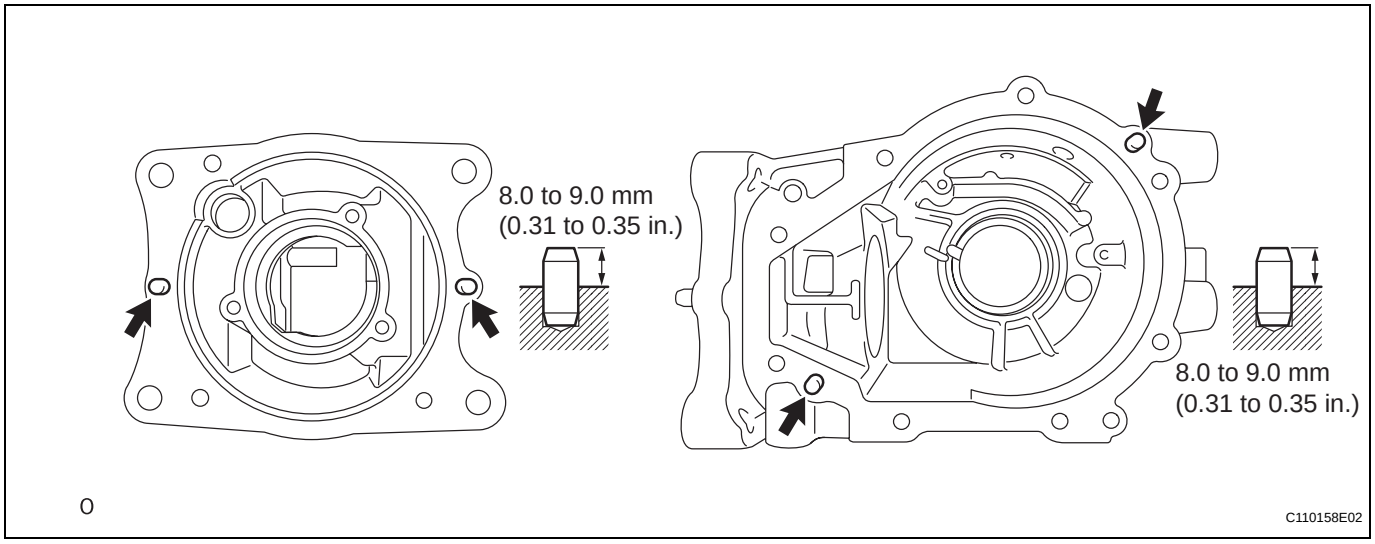

(a) Using a plastic hammer, install the 4 straight pins to the rear differential carrier.

(b) Thoroughly clean oil and water from the surface of the rear differential case that will face the differential ring gear.

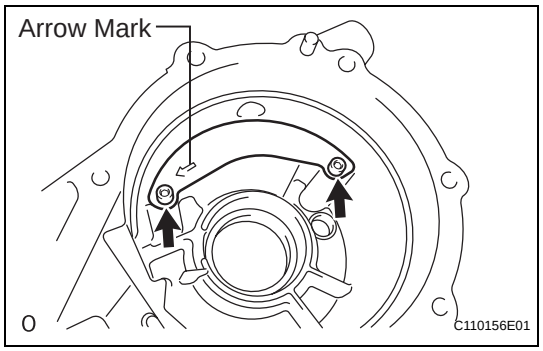

4. INSTALL DIFFERENTIAL BREATHER PLUG OIL DEFLECTOR

(a) Using a 5 mm socket hexagon wrench, install the rear differential breather plug oil deflector with the 2 bolts.

Torque: 5.0 N*m (51 kgf*cm, 44 in.*lbf)

NOTICE:

Install it so that the arrow mark faces the front (transmission coupling side) of the vehicle.

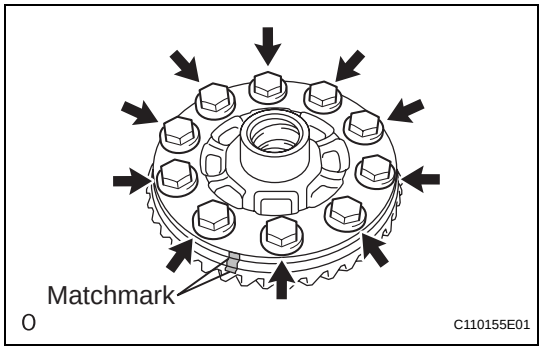

5. INSTALL DIFFERENTIAL RING GEAR

(a) Align the matchmarks on the rear differential case and differential ring gear, and install the differential ring gear.

(b) Install 10 new differential case bolts.

Torque: 90 N*m (918 kgf*cm, 66 ft.*lbf)

NOTICE:

- **The new bolts are coated with heat resistant oil. Do not wash it off.**
- **Install the rear differential case bolts by tightening diametrically opposite bolts uniformly in several passes.**

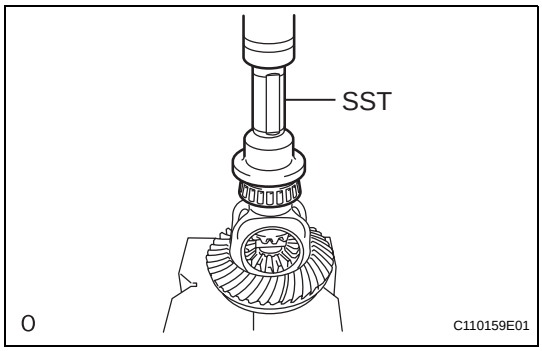

6. INSTALL DIFFERENTIAL CASE BEARING

(a) Using SST and a press, press-fit the rear differential case bearing RH (inner race) to the rear differential case.

SST 09223-50010

NOTICE:

If the rear differential case bearing inner race is damaged, replace it with a new one.

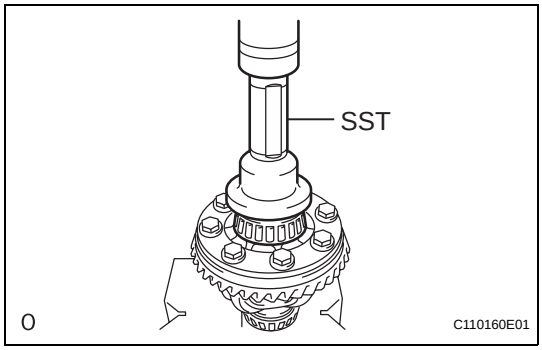

(b) Using SST and a press, press-fit the rear differential case bearing LH (inner race) to the rear differential case.

SST 09223-50010

NOTICE:

If the rear differential case bearing inner race is damaged, replace it with a new one.

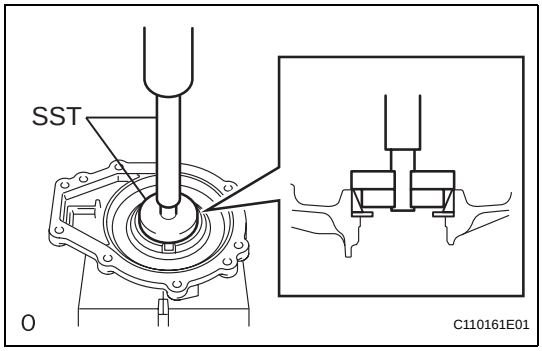

7. INSTALL DIFFERENTIAL CASE BEARING

(a) Using SST and a press, press-fit the rear differential side gear shaft washer and rear differential case bearing LH (outer race) to the differential side bearing retainer.

SST 09950-60010 (09951-00510, 09951-00620, 09952-06010), 09950-70010 (09951-07150)

NOTICE:

- **Install each rear differential side gear shaft washer to the place it was removed from.**
- **When replacing a bearing, replace the inner and outer races as a set.**
- **Install the rear differential side gear shaft oil seal after performing the teeth contact inspection and backlash adjustment.**

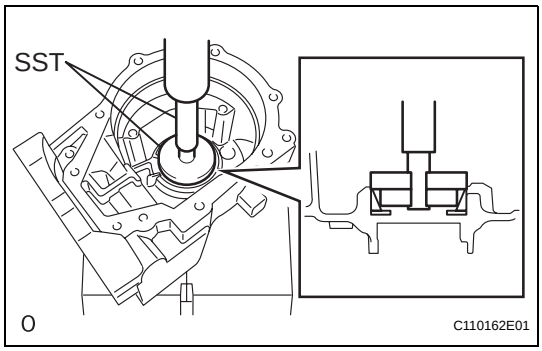

(b) Using SST and a press, press-fit the rear differential side gear shaft washer and rear differential case bearing RH (outer race) to the rear differential carrier.

SST 09950-60010 (09951-00510, 09951-00620, 09952-06010), 09950-70010 (09951-07150)

NOTICE:

- **Install each rear differential side gear shaft washer to the place it was removed from.**
- **When replacing a bearing, replace the inner and outer races as a set.**
- **Install the rear differential side gear shaft oil seal after performing the teeth contact inspection and backlash adjustment.**

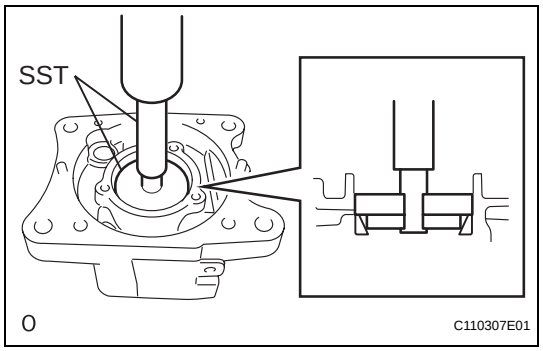

8. INSTALL REAR DRIVE PINION FRONT TAPERED ROLLER BEARING

(a) Using SST and a press, press-fit the rear drive pinion tapered roller bearing front (outer race) to the rear differential carrier.

SST 09950-60010 (09951-00550), 09950-60020 (09951-00680), 09950-70010 (09951-07100)

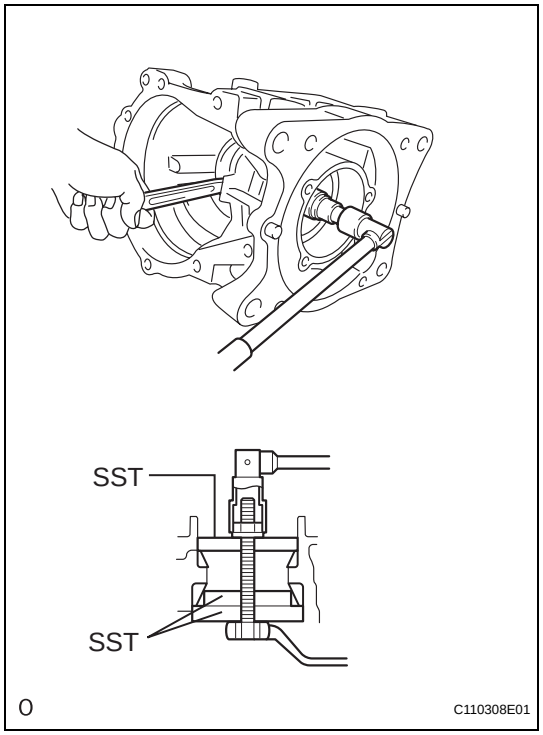

9. INSTALL REAR DRIVE PINION REAR TAPERED ROLLER BEARING

(a) Using SST, bolts, nuts and washers, install the rear drive pinion tapered roller bearing rear (outer race) to the rear differential carrier.

SST 09950-60010 (09951-00600), 09950-60020 (09951-00680, 09951-00750)

HINT:

Use M12 x P1.25 bolts with shaft lengths of 186 mm (part No. 90101-12159) and M12 x P1.25 nuts (part No. 90179-12051) for the installation.

10. INSTALL REAR DRIVE PINION REAR TAPERED ROLLER BEARING

(a) Install the rear differential drive pinion washer to the differential drive pinion.

NOTICE:

Install each rear differential drive pinion washer to the place it was removed from.

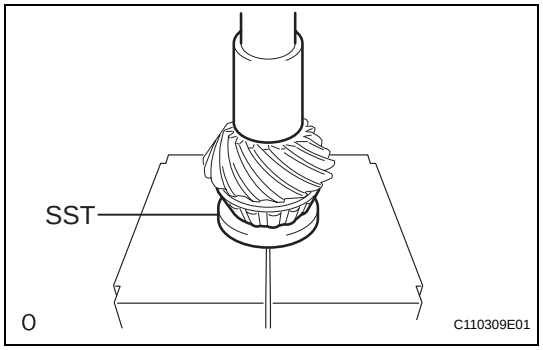

(b) Using SST and a press, press-fit the tapered roller rear (inner race) to the differential drive pinion.

SST 09506-30012

11. ADJUST DIFFERENTIAL DRIVE PINION PRELOAD

(a) Install the differential drive pinion (with rear drive pinion tapered roller bearing rear inner race) to the rear differential carrier.

(b) Install the rear drive pinion tapered roller bearing front inner race and a new rear drive pinion nut to the differential drive pinion.

NOTICE:

- **New bearings are coated with anti-rust oil. If using new bearings, do not wash it off.**
- **If reusing a bearing, coat it with hypoid gear oil SX.**

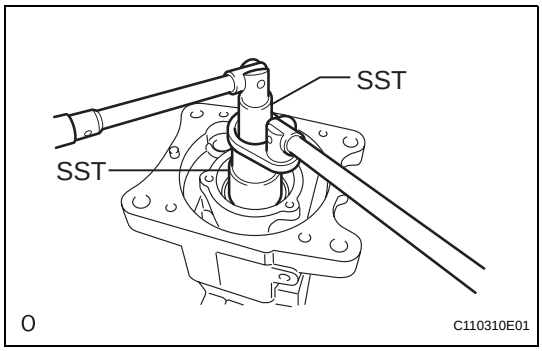

(c) Using SST, tighten a new rear drive pinion nut a little at a time until the specified preload is reached. Do not exceed the torque limit shown below.
SST 09556-16011, 09564-16020
Torque: 245 N*m (2,500 kgf*cm, 181 ft.*lbf) for use without SST
223 N*m (2,273 kgf*cm, 164 in.*lbf) for use with SST
HINT:
Use a torque wrench with a fulcrum length of 30 cm (11.81 in.)

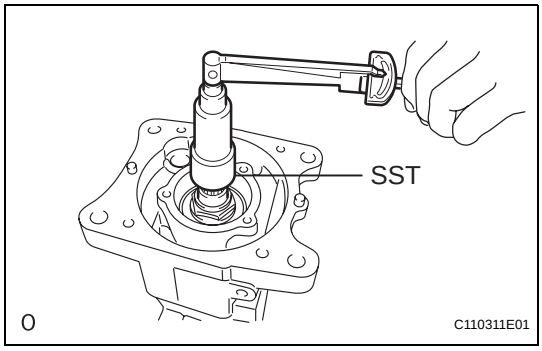

(d) Using SST and a torque wrench, measure the starting torque of the differential drive pinion.
SST 09556-16011
Standard drive pinion preload (start torque)

Bearing	Preload
New bearing	1.31 to 2.18 N*m (13 to 22 kgf*cm, 12 to 19 in.*lbf)
Reused bearing	0.24 to 0.37 N*m (2 to 4 kgf*cm, 2 to 3 in.*lbf)

NOTICE:
- **For a more accurate measurement, rotate the bearing forward and backward before inspecting.**
- **Record the preload measurement for use with the total preload inspection.**

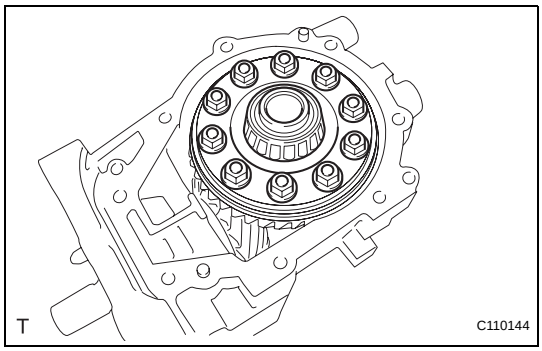

12. INSTALL DIFFERENTIAL CASE
(a) Install the rear differential case to the rear differential carrier.

13. INSTALL DIFFERENTIAL SIDE BEARING RETAINER
(a) Using a scraper and wire brush, clean the seal packing from the rear differential carrier and differential side bearing retainer.
NOTICE:
Do not scratch the installation area.

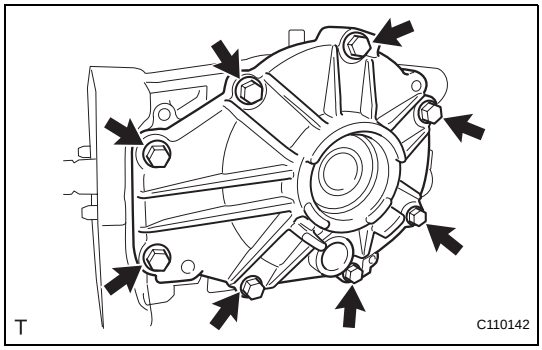

(b) Install the differential side bearing retainer to the rear differential carrier with the 8 bolts.
Torque: 34 N*m (350 kgf*cm, 25 ft.*lbf)

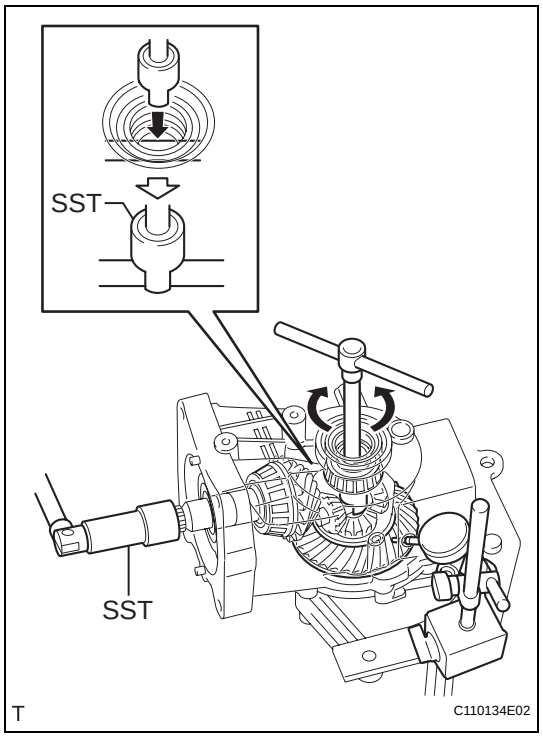

14. ADJUST DIFFERENTIAL RING GEAR BACKLASH

(a) Insert a dial gauge through the rear differential carrier cover plug hole, and set it perpendicular to the ring gear tooth surface's tip.

(b) Using SST, fix the drive pinion in place.
SST 09556-16011

(c) Using SST, rotate the rear differential case forward and backward, and measure the backlash.
SST 09564-16020
NOTICE:
Measure at 3 or more areas around the circumference of the ring gear.

(d) If the result is not within the specified range, select washers that are thicker or thinner as necessary, where the thickness for the left and right side is the same. Then perform the rear differential case bearing outer race installation.
HINT:
- If the backlash is small, select a thick washer for the RH side and a thin washer for the LH side.
- If the backlash is large, select a thin washer for the RH side and a thick washer for the LH side.

DF

Rear differential side gear shaft washer

Part No.	Thickness mm (in.)	Identifying Mark	Part No.	Thickness mm (in.)	Identifying Mark
90564-37022	1.59 to 1.61 (0.0625 to 0.0633)	A0	90564-37040	2.13 to 2.15 (0.0839 to 0.0846)	B8
90564-37023	1.62 to 1.64 (0.0637 to 0.0649)	A1	90564-37041	2.16 to 2.18 (0.0850 to 0.0858)	B9
90564-37024	1.65 to 1.67 (0.0650 to 0.0657)	A2	90564-37042	2.19 to 2.21 (0.0862 to 0.0870)	C0
90564-37025	1.68 to 1.70 (0.0661 to 0.0669)	A3	90564-37043	2.22 to 2.24 (0.0874 to 0.0882)	C1
90564-37026	1.71 to 1.73 (0.0673 to 0.0681)	A4	90564-37044	2.25 to 2.27 (0.0886 to 0.0894)	C2
90564-37027	1.74 to 1.76 (0.0685 to 0.0693)	A5	90564-37045	2.28 to 2.30 (0.0898 to 0.0906)	C3
90564-37028	1.77 to 1.79 (0.0697 to 0.0705)	A6	90564-37046	2.31 to 2.33 (0.0909 to 0.0917)	C4
90564-37029	1.80 to 1.82 (0.0709 to 0.0717)	A7	90564-37047	2.34 to 2.36 (0.0921 to 0.0929)	C5
90564-37030	1.83 to 1.85 (0.0720 to 0.0728)	A8	90564-37048	2.37 to 2.39 (0.0930 to 0.0941)	C6
90564-37031	1.86 to 1.88 (0.0732 to 0.0740)	A9	90564-37049	2.40 to 2.42 (0.0945 to 0.0953)	C7
90564-37032	1.89 to 1.91 (0.0744 to 0.0752)	B0	90564-37050	2.43 to 2.45 (0.0957 to 0.0965)	C8
90564-37033	1.92 to 1.94 (0.0756 to 0.0764)	B1	90564-37051	2.46 to 2.48 (0.0969 to 0.0976)	C9
90564-37034	1.95 to 1.97 (0.0768 to 0.0776)	B2	90564-37052	2.49 to 2.51 (0.0980 to 0.0988)	D0
90564-37035	1.98 to 2.00 (0.0780 to 0.0787)	B3	90564-37053	2.52 to 2.54 (0.0992 to 0.1000)	D1
90564-37036	2.02 to 2.04 (0.0795 to 0.0803)	B4	90564-37054	2.55 to 2.57 (0.1004 to 0.1012)	D2
90564-37037	2.04 to 2.06 (0.0803 to 0.0811)	B5	90564-37055	2.58 to 2.60 (0.1016 to 0.1024)	D3

Part No.	Thickness mm (in.)	Identifying Mark	Part No.	Thickness mm (in.)	Identifying Mark
90564-37038	2.07 to 2.09 (0.0815 to 823)	B6	90564-37056	2.61 to 2.63 (1.1028 to 0.1035)	D4
90564-37039	2.10 to 2.12 (0.0827 to 0.0835)	B7	90564-37057	2.64 to 2.66 (0.1039 to 0.1047)	D5

15. INSPECT TOOTH CONTACT BETWEEN RING GEAR AND DRIVE PINION

(a) Remove the 8 bolts and differential side bearing retainer from the rear differential carrier.
(b) Remove the rear differential carrier case.
(c) Uniformly apply a light coat of prussian blue on both sides of the differential ring gear teeth.
(d) Install the rear differential case.
(e) Temporarily install the differential side bearing retainer to the differential carrier with the 8 bolts.
(f) Rotate the differential side pinion several times.
(g) Remove the 8 bolts and rear differential side bearing retainer from the differential carrier.
(h) Check the tooth contact pattern of the differential drive pinion and differential ring gear.

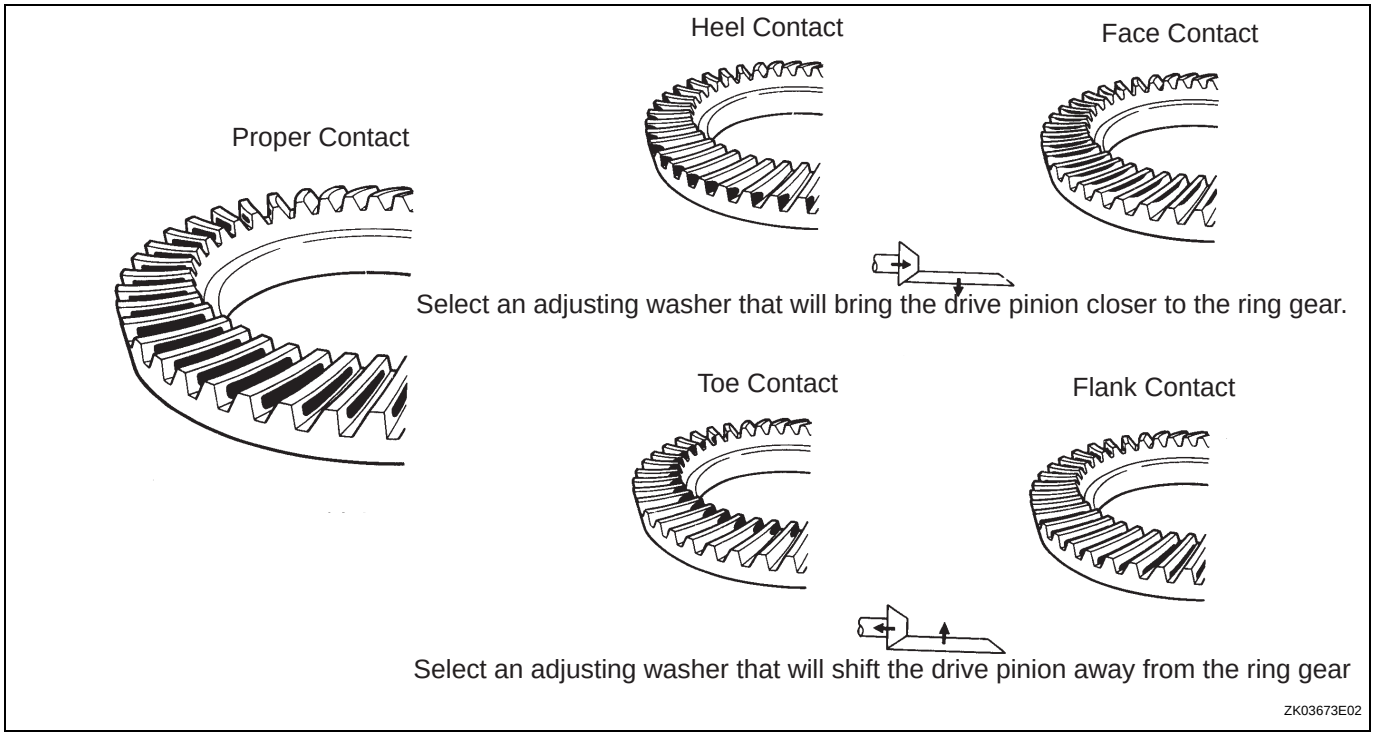

NOTICE:
Check the tooth contact pattern at 2 or more positions around circumference of the differential ring gear.

(i) Perform the following procedures for face or flank contact.
  (1) Select washers that are thicker or thinner as necessary, where the thickness for the left and right side is the same. Then install the rear differential case bearing outer race.(*1)

(2) Repeat the differential ring gear and differential drive pinion tooth contact pattern inspection.
HINT:
If the tooth contact pattern is not correct, repeat*1.

(3) Repeat the differential ring gear and differential drive pinion backlash inspection.
HINT:
If the differential ring gear and differential drive pinion backlash is not as specified, replace the differential ring gear and differential drive pinion with new ones.

(j) Perform the following procedures for heel or toe contact.

(1) Select a drive pinion washer again and perform the rear drive pinion tapered roller bearing rear installation.

Rear differential drive pinion washer

Part No.	Thickness (mm)	Identifying Mark	Part No.	Thickness (mm)	Identifying Mark
90564-35041	1.695 to 1.705 (0.0667 to 0.0671)	41	90564-35071	1.955 to 1.965 (0.0770 to 0.0774)	71
90564-35042	1.705 to 1.715 (0.0671 to 0.0675)	42	90564-35072	1.965 to 1.975 (0.0774 to 0.0778)	72
90564-35043	1.715 to 1.725 (0.0675 to 0.0679)	43	90564-35073	1.975 to 1.985 (0.0778 to 0.0781)	73
90564-35044	1.725 to 1.735 (0.0679 to 0.0683)	44	90564-35074	1.985 to 1.995 (0.0781 to 0.0785)	74
90564-35045	1.735 to 1.745 (0.0683 to 0.0687)	45	90564-35075	1.995 to 2.005 (0.0785 to 0.0789)	75
90564-35046	1.745 to 1.755 (0.0687 to 0.0690)	46	90564-35076	2.005 to 2.015 (0.0789 to 0.0793)	76
90564-35047	1.755 to 1.765 (0.0690 to 0.0695)	47	90564-35077	2.015 to 2.025 (0.0793 to 0.0797)	77
90564-35048	1.765 to 1.775 (0.0695 to 0.0699)	48	90564-35078	2.025 to 2.035 (0.0797 to 0.0801)	78
90564-35049	1.775 to 1.785 (0.0699 to 0.0703)	49	90564-35079	2.035 to 2.045 (0.0801 to 0.0805)	79
90564-35050	1.785 to 1.795 (0.0703 to 0.0707)	50	90564-35080	2.045 to 2.055 (0.0805 to 0.0809)	80
90564-35051	1.795 to 1.805 (0.0707 to 0.0711)	51	90564-35081	2.055 to 2.065 (0.0809 to 0.0813)	81
90564-35052	1.805 to 1.815 (0.0707 to 0.0715)	52	90564-35082	2.065 to 2.075 (0.0813 to 0.0817)	82
90564-35053	1.815 to 1.825 (0.0715 to 0.0719)	53	90564-35083	2.075 to 2.085 (0.0817 to 0.0821)	83
90564-35054	1.825 to 1.835 (0.0719 to 0.0720)	54	90564-35084	2.085 to 2.095 (0.0821 to 0.0825)	84
90564-35055	1.835 to 1.845 (0.0719 to 0.0726)	55	90564-35085	2.095 to 2.105 (0.0825 to 0.0829)	85
90564-35056	1.845 to 1.855 (0.0726 to 0.0730)	56	90564-35086	2.105 to 2.115 (0.0829 to 0.0833)	86
90564-35057	1.855 to 1.865 (0.0730 to 0.0734)	57	90564-35087	2.115 to 2.125 (0.0833 to 0.0837)	87
90564-35058	1.865 to 1.875 (0.0734 to 0.0738)	58	90564-35088	2.125 to 2.135 (0.0837 to 0.0841)	88
90564-35059	1.875 to 1.885 (0.0734 to 0.0742)	59	90564-35089	2.135 to 2.145 (0.0841 to 0.0844)	89

Part No.	Thickness (mm)	Identifying Mark	Part No.	Thickness (mm)	Identifying Mark
90564-35060	1.885 to 1.895 (0.0742 to 0.0746)	60	90564-35090	2.145 to 2.155 (0.0844 to 0.0848)	90
90564-35061	1.895 to 1.905 (0.0746 to 0.0750)	61	90564-35091	2.155 to 2.165 (0.0848 to 0.0852)	91
90564-35062	1.905 to 1.915 (0.0750 to 0.0754)	62	90564-35092	2.165 to 2.175 (0.0852 to 0.0856)	92
90564-35063	1.915 to 1.925 (0.0754 to 0.0758)	63	90564-35093	2.175 to 2.185 (0.0856 to 0.0860)	93
90564-35064	1.925 to 1.935 (0.0758 to 0.0762	64	90564-35094	2.185 to 2.195 (0.0860 to 0.0864)	94
90564-35065	1.935 to 1.945 (0.0762 to 0.0766)	65	90564-35095	2.195 to 2.205 (0.0864 to 0.0868)	95
90564-35070	1.945 to 1.955 (0.0766 to 0.0770)	70	-	-	-

DF

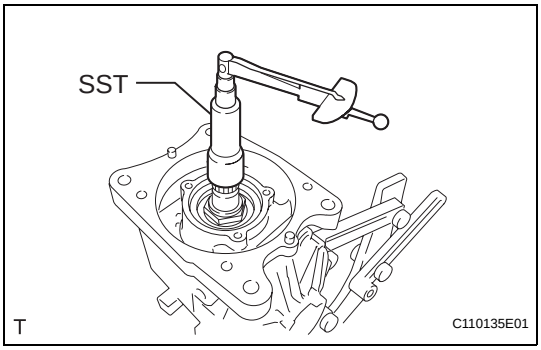

16. INSPECT TOTAL PRELOAD

(a) Using SST and a torque wrench, measure the starting torque with the teeth of the differential drive pinion and differential ring gear in contact.

SST 09556-16011

Standard total preload:

Standard drive pinion preload plus

Bearing	Preload
New bearing	1.18 to 1.63 N*m (12 to 17 kgf*cm, 10 to 14 in.*lbf)
Reused bearing	0.99 to 1.63 N*m (10 to 17 kgf*cm, 9 to 14 in.*lbf)

NOTICE:
For a more accurate measurement, rotate the case bearing forward and backward before measuring.

(b) If the results are not within the specification, perform the procedures below.

(1) Select a side gear shaft washer for the RH side again, and then perform the rear differential case bearing outer race installation (RH side only).

(2) Repeat the total preload inspection.

(3) Repeat the ring gear backlash inspection.

(4) Repeat the differential ring gear and drive pinion tooth contact pattern inspection.

17. REMOVE DIFFERENTIAL SIDE BEARING RETAINER

(a) Remove the 8 bolts and differential side bearing retainer from the rear differential carrier.

18. REMOVE DIFFERENTIAL CASE

(a) Remove the rear differential case from the rear differential carrier.

19. REMOVE DIFFERENTIAL DRIVE PINION

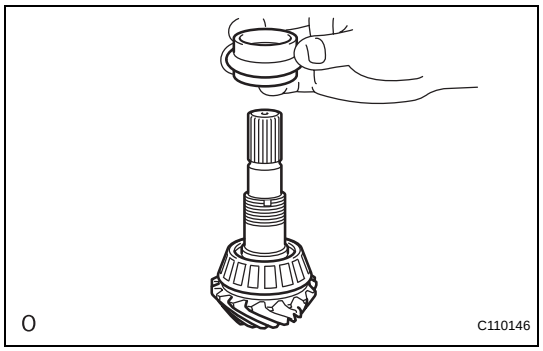

20. INSTALL DIFFERENTIAL DRIVE PINION BEARING SPACER

(a) Install a new rear differential drive pinion bearing spacer to the differential drive pinion.

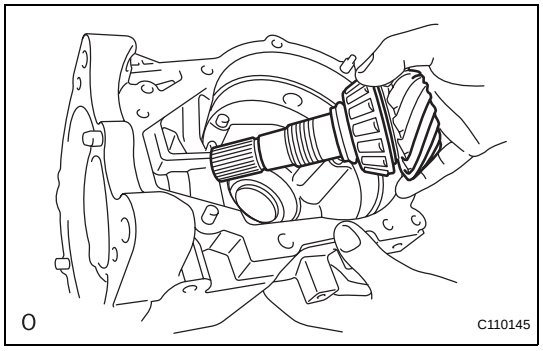

21. INSTALL DIFFERENTIAL DRIVE PINION

(a) Install the differential drive pinion to the rear differential carrier.

22. INSTALL REAR DRIVE PINION NUT

(a) Apply hypoid gear oil LSD to the threads of the rear drive pinion nut.

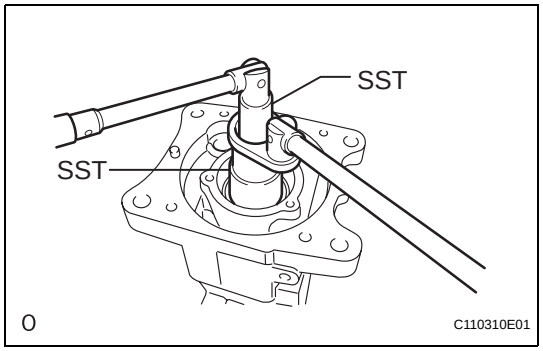

(b) Install a new rear drive pinion nut to the differential drive pinion. Using SST, tighten the nut while confirming the preload.

SST 09556-16011, 09564-16020
SST 09564-16020
Torque: 245 N*m (2,500 kgf*cm, 181 ft.*lbf) for use without SST
223 N*m (2,273 kgf*cm, 164 ft.*lbf) for use with SST

HINT:
Use a torque wrench with a fulcrum length of 30 cm (11.81 in.).

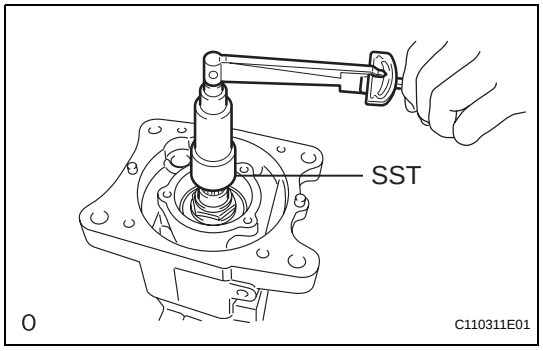

23. ADJUST DIFFERENTIAL DRIVE PINION PRELOAD

(a) Using SST and a torque wrench, inspect the starting torque.

SST 09556-16011
Standard drive pinion preload

Bearing	Preload
New bearing	1.31 to 2.18 N*m (13 to 22 kgf*cm, 12 to 19 in.*lbf)
Reused bearing	0.24 to 0.37 N*m (2 to 4 kgf*cm, 2 to 3 in.*lbf)

NOTICE:
- **For a more accurate measurement, rotate the bearing forward and backward before adjusting.**
- **Adjust it so that it matches the drive pinion temporary adjustment starting torque.**

DF

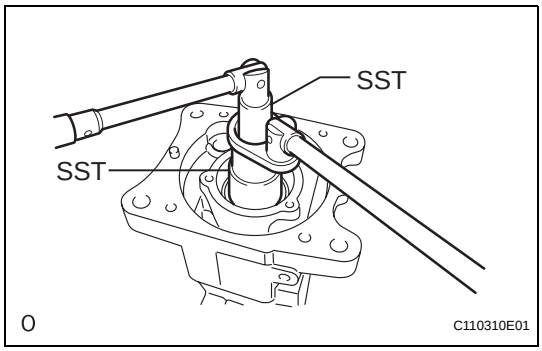

(b) If the preload is insufficient, use SST to tighten the drive pinion nut 5 to 10° at a time. Measure the starting torque and repeat the adjustment as necessary until the preload matches the specified torque.
SST 09564-16020

(c) If the tightening torque of the rear drive pinion nut exceeds 245 N*m { 2500 kgf*cm } but the preload is still insufficient, loosen the rear drive pinion nut. Then check if the rear drive pinion nut and differential drive pinion screw threads are damaged.

(d) If there is no defect, replace the rear drive differential drive pinion bearing spacer, apply hypoid gear oil LSD to its threads and repeat the procedure above.

24. INSTALL DIFFERENTIAL CASE

25. INSTALL DIFFERENTIAL SIDE BEARING RETAINER

(a) Install the differential side bearing retainer to the rear differential carrier with the 8 bolts.
Torque: 34 N*m (350 kgf*cm, 25 ft.*lbf)

26. INSPECT DIFFERENTIAL RING GEAR BACKLASH

27. INSPECT TOTAL PRELOAD

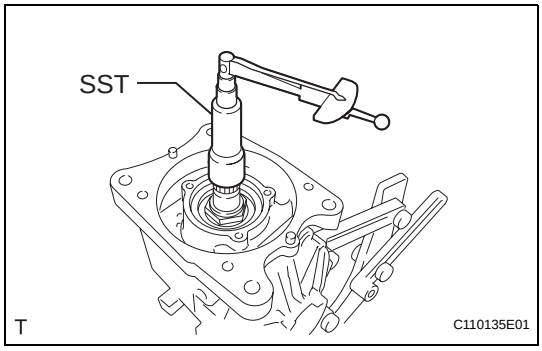

(a) Using SST and a torque wrench, measure the starting torque with the teeth of the differential drive pinion and differential ring gear in contact.
SST 09556-16011
Standard total preload:
Standard drive pinion preload plus

Bearing	Preload
New bearing	1.18 to 1.90 N*m (12 to 19 kgf*cm, 10 to 17 in.*lbf)
Reused bearing	0.99 to 1.63 N*m (10 to 17 kgf*cm, 9 to 14 in.*lbf)

NOTICE:
For a more accurate measurement, rotate the case bearing forward and backward before measuring.

(b) If the results are not within the specified range, select a rear differential side gear shaft washer for the RH side again, and then perform the rear differential case bearing outer race installation (RH side only).
NOTICE:
If using a different rear differential side gear shaft washer, adjust the ring gear backlash. Then adjust the total preload.

28. REMOVE DIFFERENTIAL SIDE BEARING RETAINER

(a) Remove the 8 bolts and side bearing retainer from the rear differential carrier.

29. INSTALL DIFFERENTIAL SIDE BEARING RETAINER

(a) Using white gasoline, remove grease and oil from the alignment surfaces of the rear differential carrier and differential side bearing retainer.

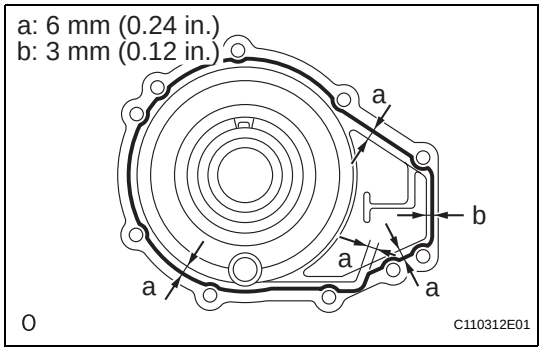

(b) Apply seal packing to the areas indicated in the illustration of the differential side bearing retainer.
Seal Packing:
Toyota Genuine Seal Packing 1281, Three Bond 1281 or equivalent
NOTICE:
- **Apply seal packing in a continuous line 2 to 3 mm (0.08 to 0.12 in.) in diameter.**
- **Perform the installation with 3 minutes of applying seal packing.**

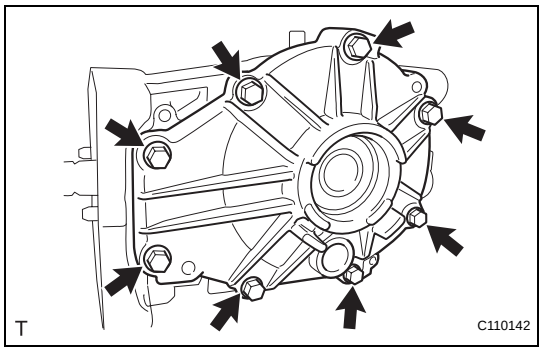

(c) Install the differential side bearing retainer to the rear differential carrier with the 8 bolts.
Torque: 34 N*m (350 kgf*cm, 25 ft.*lbf)
NOTICE:
After installing the cover, do not add oil or drive the vehicle, and leave it alone for 1 hour or more. Also, avoid sudden acceleration and deceleration for 12 hours or more.

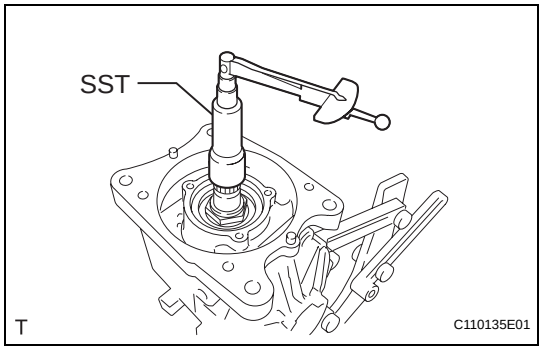

30. INSPECT TOTAL PRELOAD

(a) Using SST and a torque wrench, inspect the starting torque with the teeth of the differential drive pinion and differential ring gear in contact.
SST 09556-16011
Standard total preload:
Standard drive pinion preload plus

Bearing	Preload
New bearing	1.18 to 1.90 N*m (12 to 19 kgf*cm, 10 to 17 in.*lbf)
Reused bearing	0.99 to 1.63 N*m (10 to 17 kgf*cm, 9 to 14 in.*lbf)

NOTICE:
For a more accurate measurement, rotate the case bearing forward and backward before inspecting.

DF

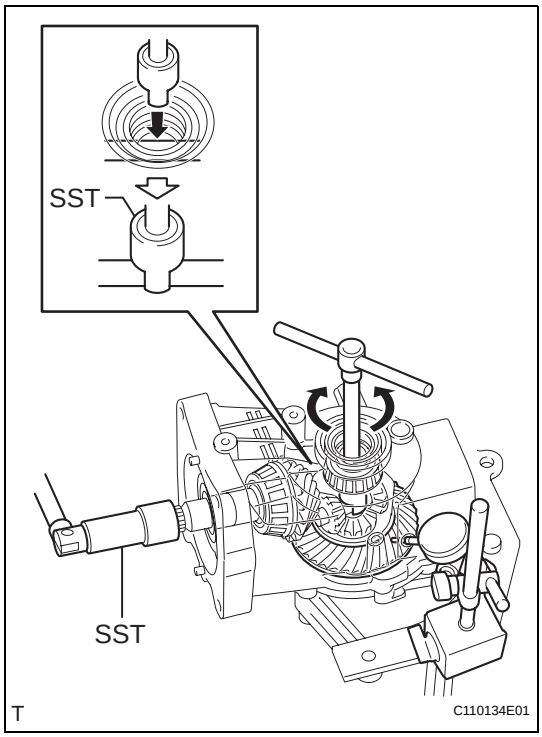

31. INSPECT DIFFERENTIAL RING GEAR BACKLASH

(a) Insert a dial gauge through the rear differential carrier cover plug hole, and set it perpendicular to the ring gear tooth surface's tip.

(b) Using SST, fix the drive pinion in place.
SST 09556-16011

(c) Using SST, rotate the rear differential case forward and backward, and inspect the backlash.
SST 09564-16020
Standard backlash:
0.09 to 0.16 mm (0.0004 to 0.006 in.)
NOTICE:
Inspect at 3 or more areas around the circumference of the ring gear.

32. INSTALL REAR DRIVE PINION NUT

(a) Using a chisel and hammer, stake the rear drive pinion nut.

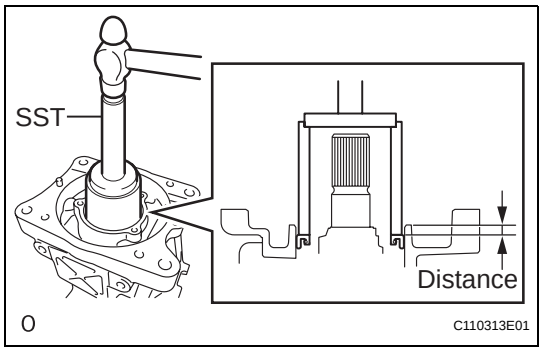

33. INSTALL DIAPHRAGM OIL SEAL

(a) Apply a light coat of MP grease No. 2 to the lip of a new diaphragm oil seal.

(b) Using SST and a hammer, tap the diaphragm oil seal into the rear differential carrier according to the specification.
SST 09710-30021 (09710-03121), 09950-60010 (09951-00570), 09950-70010 (09951-07100)
Standard distance:
7.0 +-0.5 mm (0.28 +-0.02 in.)

34. INSTALL DIFFERENTIAL SIDE GEAR SHAFT OIL SEAL

(a) Apply a light coat of MP grease No. 2 to the lip of a new rear differential side gear shaft oil seal.

(b) Using SST and a hammer, tap the 2 rear differential side gear shaft oil seals into the rear differential carrier and differential side bearing retainer according to the specification.
SST 09223-00010
Standard distance:
7.2 +-0.5 mm (0.28 +-0.02 in.)

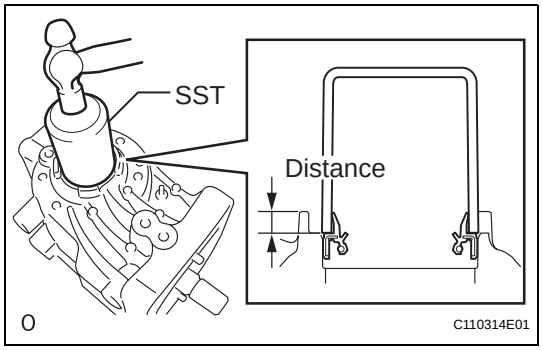

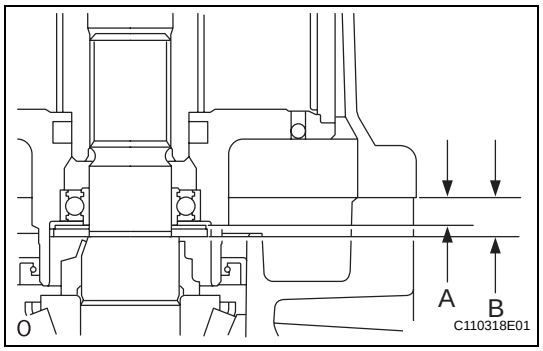

35. INSTALL TRANSMISSION COUPLING SHIM

(a) Measure each of the dimensions.
HINT:
- Dimension A: Bearing axis distance
- Dimension B: Drive pinion axis distance

(b) Select a transmission coupling shim based on the difference between dimensions A and B, and install the shim.

Transmission coupling shim

Difference of dimension A and B mm (in.)	Part No.	Thickness mm (in.)	Identifying Mark
3.96 to 4.01 (0.148 to 0.154)	90564-25024	1.98 to 2.02 (0.078 to 0.080)	1
4.26 to 4.31 (0.161 to 0.168)	90564-25025	2.28 to 2.32 (0.090 to 0.091)	2
4.56 to 4.61 (0.174 to 0.181)	90564-25026	2.58 to 2.62 (0.102 to 0.103)	3
3.81 to 3.86 (0.141 to 0.148)	90564-25027	1.83 to 1.87 (0.072 to 0.074)	4
4.11 to 4.16 (0.154 to 0.161)	90564-25028	2.13 to 2.17 (0.084 to 0.085)	5
4.41 to 4.16 (0.168 to 0.174)	90564-25029	2.43 to 2.47 (0.096 to 0.097)	6
3.71 to 3.76 (0.146 to 0.148)	90564-25031	1.73 to 1.77 (0.068 to 0.700)	8
3.76 to 3.81 (0.148 to 0.150)	90564-25032	1.78 to 1.82 (0.070 to 0.072)	9
3.86 to 3.91 (0.151 to 0.154)	90564-25033	1.88 to 1.92 (0.074 to 0.076)	10
3.91 to 3.96 (0.154 to 0.156)	90564-25034	1.93 to 1.97 (0.076 to 0.078)	11
4.01 to 4.06 (0.158 to 0.160)	90564-25035	2.03 to 2.07 (0.080 to 0.081)	12
4.06 to 4.11 (0.160 to 0.162)	90564-25036	2.08 to 2.12 (0.082 to 0.083)	13
4.16 to 4.21 (0.164 to 0.166)	90564-25037	2.18 to 2.22 (0.086 to 0.087)	14
4.21 to 4.26 (0.166 to 0.168)	90564-25038	2.23 to 2.27 (0.088 to 0.089)	15
4.31 to 4.36 (0.170 to 0.172)	90564-25039	2.33 to 2.37 (0.092 to 0.093)	16
4.36 to 4.41 (0.172 to 0.174)	90564-25040	2.38 to 2.42 (0.094 to 0.095)	17
4.46 to 4.51 (0.176 to 0.178)	90564-25041	2.48 to 2.52 (0.098 to 0.099)	18
4.51 to 4.56 (0.178 to 0.180)	90564-25042	2.53 to 2.57 (0.100 to 0.101)	19
4.61 to 4.66 (0.181 to 0.183)	90564-25043	2.63 to 2.67 (0.104 to 0.105)	20
4.66 to 4.71 (0.183 to 0.185)	90564-25044	2.68 to 2.72 (0.106 to 0.107)	21

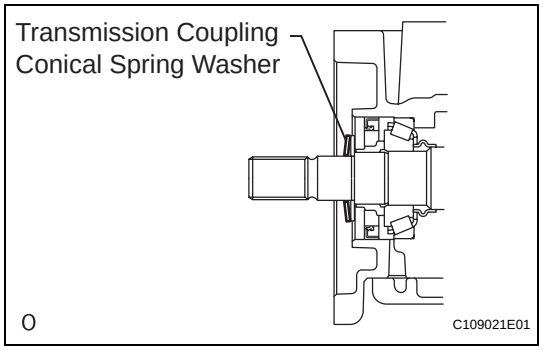

36. REMOVE TRANSMISSION COUPLING CONICAL SPRING WASHER

(a) Install the transmission coupling conical spring washer to the rear differential carrier.
NOTICE:
Install the transmission coupling conical spring washer so that the green marking (protruding part) is facing the front of the vehicle (coupling side).

37. INSTALL YOKE

(a) Using a 5 mm socket hexagon wrench, install the yoke with the 3 bolt.
Torque: 5.0 N*m (51 kgf*cm, 44 in.*lbf)

38. INSTALL 4WD LINEAR SOLENOID

(a) Install a new O-ring to the solenoid.
NOTICE:
Do not damage or twist the O-ring.

(b) Install the solenoid to the yoke.

DF

(c) Install the snap ring.

39. INSTALL ELECTROMAGNETIC COUPLING

(a) Using white gasoline, remove grease and oil from the alignment surfaces of the rear differential carrier and transmission coupling.

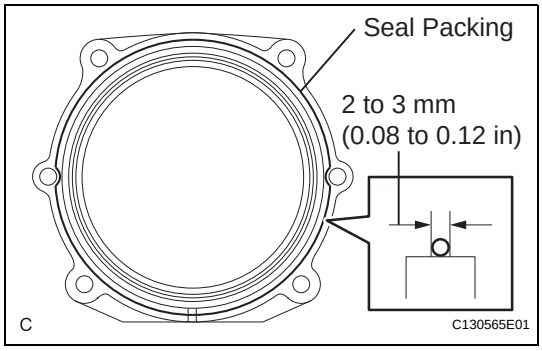

(b) Apply seal packing 1281 to the areas indicated in the illustration of the transmission coupling.
Seal Packing:
Toyota Genuine Seal Packing 1281, Three Bond 1281 or equivalent
NOTICE:
- **Apply seal packing 1281 in a continuous line 2 to 3 mm (0.08 to 0.12 in.) in diameter.**
- **Perform the installation with 3 minutes of applying seal packing 1281.**

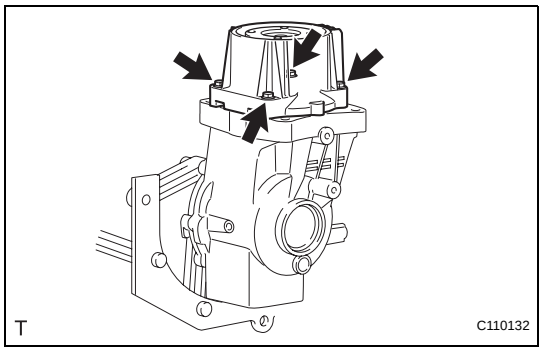

(c) Install the rear differential carrier cover to the rear differential carrier assembly with the 4 bolts.
Torque: 19.6 N*m (200 kgf*cm, 14 ft.*lbf)

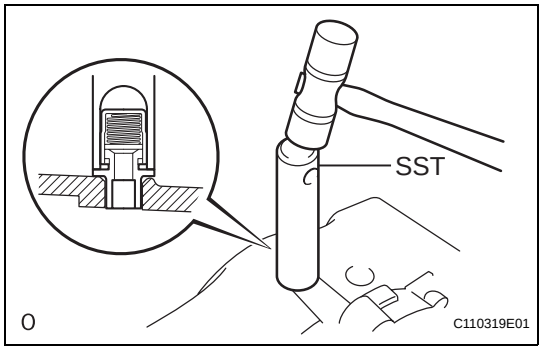

40. INSTALL DIFFERENTIAL CARRIER COVER BREATHER PLUG

(a) Using a plastic-faced hammer, tap in the breather plug.
SST 09612-07010 (09612-10061)

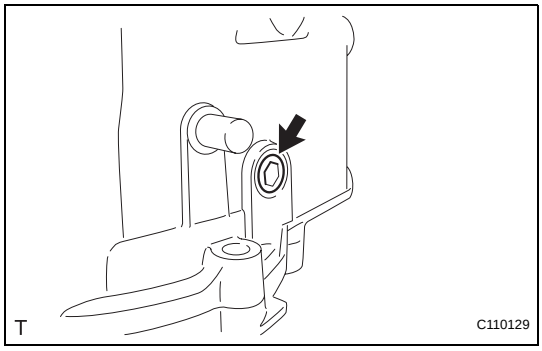

41. INSTALL DIFFERENTIAL CARRIER COVER PLUG

(a) Using an 8 mm socket hexagon wrench, install a new rear differential carrier cover plug.
Torque: 30 N*m (306 kgf*cm, 22 ft.*lbf)

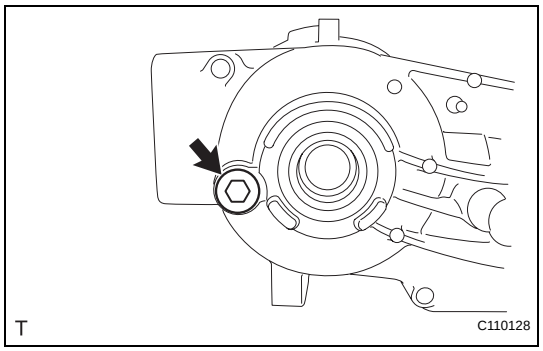

42. INSTALL DIFFERENTIAL FILLER PLUG

(a) Install a new gasket to the rear differential filler plug.

(b) Using a 10 mm socket hexagon wrench, install the rear differential filler plug.
Torque: 39 N*m (400 kgf*cm, 29 ft.*lbf)

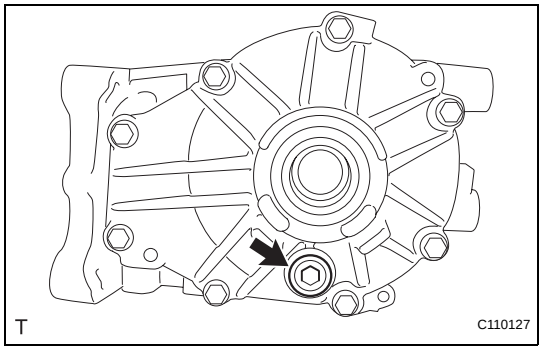

43. INSTALL DIFFERENTIAL DRAIN PLUG

(a) Install a new gasket to the rear differential drain plug.

(b) Using a 10 mm socket hexagon wrench, install the rear differential drain plug.
Torque: 39 N*m (400 kgf*cm, 29 ft.*lbf)

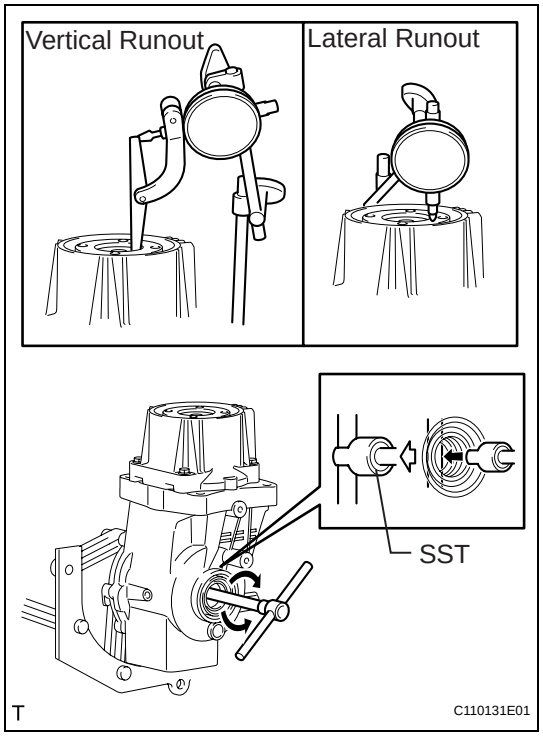

44. INSPECT RUNOUT OF TRANSMISSION COUPLING ASSEMBLY

(a) Install a dial gauge so that it is perpendicular to the inner side of the transmission coupling.

(b) Using SST, rotate the transmission coupling forward and backward and measure the vertical runout.
SST 09564-16020
Maximum vertical runout:
0.06 mm (0.0024 in.)

(c) Install a dial gauge perpendicularly onto the transmission coupling, as shown in the illustration.

(d) Using SST, rotate the transmission coupling forward and backward and measure the lateral runout.
SST 09564-16020
Maximum lateral runout:
0.07 mm (0.0028 in.)

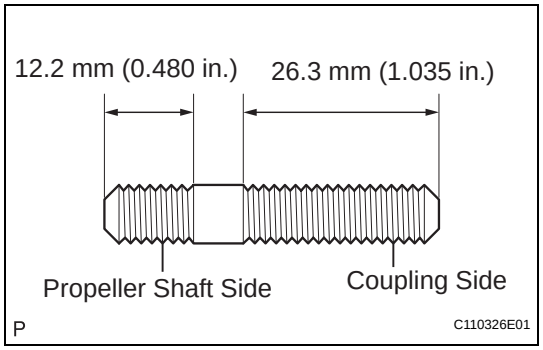

45. INSTALL STUD BOLT

(a) Install the differential support assembly rear with the 4 bolts.
Torque: 8 N*m (82 kgf*cm, 71 in.*lbf)

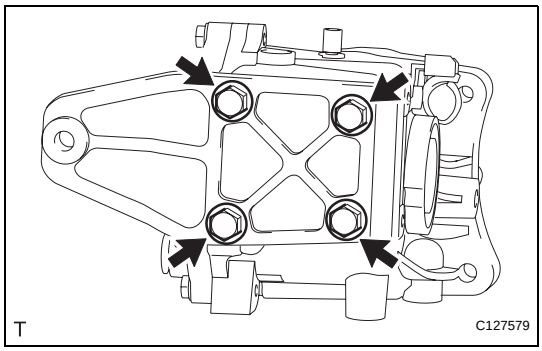

INSTALLATION

1. INSTALL REAR DIFFERENTIAL SUPPORT

(a) Install the differential support to the differential carrier with the 4 bolts.
Torque: 98 N*m (999 kgf*cm, 72 ft.*lbf)

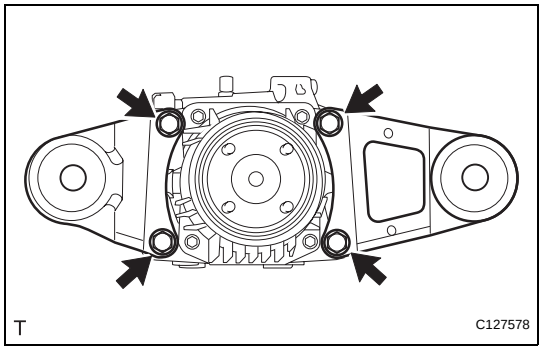

2. INSTALL REAR DIFFERENTIAL NO. 1 AND NO. 2 SUPPORT

(a) Install the differential No. 1 and No. 2 supports with the 4 bolts to the differential carrier.
Torque: 55 N*m (561 kgf*cm, 41 ft.*lbf)

3. INSTALL REAR DIFFERENTIAL CARRIER SUB-ASSEMBLY

(a) Support the rear differential carrier with a transmission jack or equivalent

(b) Apply hypoid gear oil to the splines of the left and right rear drive shaft inboard joints.

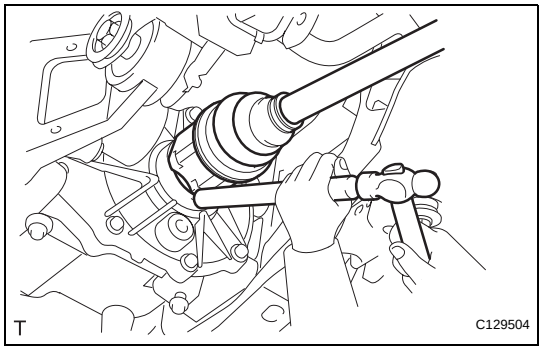

(c) Align the splines of the rear drive shaft inboard joints and, using a brass bar and hammer, tap in the left and right rear drive shafts.
NOTICE:
- **Face the cutout section of the snap ring downward.**
- **Do not damage the oil seal during the insertion.**
- **Do not strike the tip of the outboard joint with the hammer.**

HINT:
Determine whether or not the rear drive shaft is completely tapped in by checking for changes in sound or the reaction force of the brass bar.

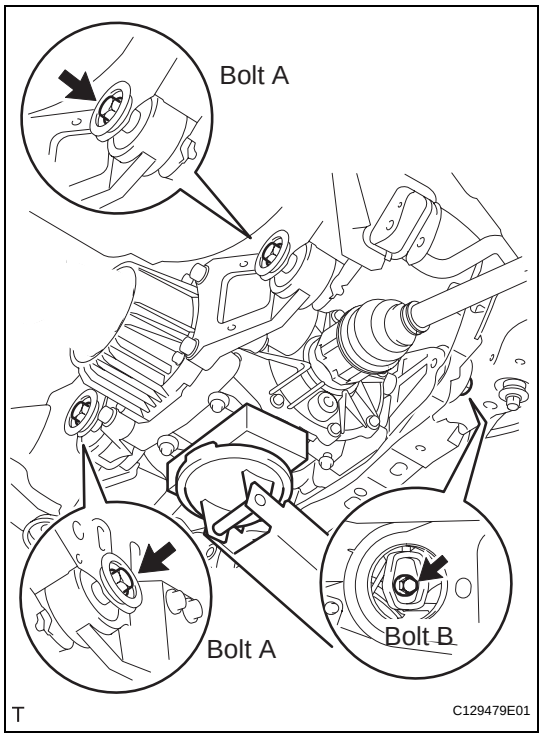

(d) Slowly raise the transmission jack, fix the nuts in place and install the 3 bolts.
Torque: 86 N*m (877 kgf*cm, 63 ft.*lbf) for bolt A
140 N*m (1,428 kgf*cm, 103 ft.*lbf) for bolt B
NOTICE:
Tighten the bolts, not the nuts.

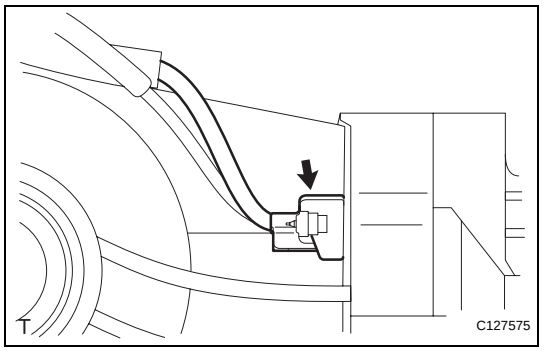

(e) Connect the connector.
(f) Install the breather tube.
(g) Connect the harness clamp.

4. INSTALL REAR SUSPENSION MEMBER BRACE LH
(a) Install the member brace to the suspension member with the 2 bolts.
Torque: 60 N*m (612 kgf*cm, 44 ft.*lbf)

5. INSTALL REAR SUSPENSION MEMBER BRACE RH
HINT:
Use the same procedures described for the LH side.

6. TEMPORARILY INSTALL PROPELLER WITH CENTER BEARING SHAFT ASSEMBLY (See page PR-5)

7. TIGHTEN PROPELLER WITH CENTER BEARING SHAFT ASSEMBLY (See page PR-6)

8. INSPECT JOINT ANGLE (See page PR-4)

9. INSTALL CENTER EXHAUST PIPE ASSEMBLY (See page EX-5)

10. INSTALL TAILPIPE ASSEMBLY (See page EX-6)

11. INSTALL REAR WHEEL
Torque: 103 N*m (1,050 kgf*cm, 76 ft.*lbf)

12. ADD DIFFERENTIAL OIL
(a) Add differential oil (see page DF-3).

13. CHECK FOR DIFFERENTIAL OIL LEAKAGE

14. CHECK FOR EXHAUST GAS LEAKAGE
If gas is leaking, tighten the areas necessary to stop the leak. Replace damaged parts as necessary.

DIFFERENTIAL SYSTEM

PRECAUTION

1. **Before disassembling the differential assembly, thoroughly clean it by removing any sand, mud or foreign matter. This will help prevent contamination during disassembly and reassembly.**
2. **When removing the rear differential carrier cover or any other light alloy part, do not pry it off with a screwdriver or other tool that may cause damage. Instead, tap the part with a plastic-faced hammer.**
3. **Always arrange disassembled parts in the order they were removed and protect them from foreign matter.**
4. **Before installation of each part, thoroughly clean and dry it. Then apply hypoid gear oil SX to it. Do not use alkaline chemicals to clean aluminum parts, rubber parts or ring gear set bolts. Also, do not use white gasoline or other cleaning oils to clean Orings, oil seals or rubber parts.**
5. **Coat any sliding surface and rotating parts with hypoid gear oil SX.**
6. **Do not directly fix a part in a vise. Place aluminum plates between the part and vise.**
7. **Be careful not to damage the contact surfaces of the case. Such damage may cause oil leakage.**
8. **Before applying sealant, remove deposited oil sealant and clean the part to be sealed using white gasoline.**
9. **After sealing parts, do not allow oil to contact the seal for at least an hour.**
10. **Do not allow scratches on a part's contact surface with an oil seal, O-ring or gasket. Scratches may lead to oil leakage.**
11. **When press-fitting an oil seal, be careful not to damage the lip of the oil seal and its outside periphery.**
12. **When replacing a bearing, replace the inner and outer races as a set.**

PROBLEM SYMPTOMS TABLE

HINT:
Use the table below to help determine the cause of the problem symptom. The potential causes of the symptoms are listed in order of probability in the "Suspected area" column of the table. Check each symptom by checking the suspected areas in the order they are listed. Replace parts as necessary.

Differential system

Symptom	Suspected area	See page
Noise in rear differential	1. Oil (Level low or wrong grade)	DF-3
	2. Ring gear or drive pinion (Worn or chipped)	DF-20
	3. Backlash adjustment (Defective)	DF-20
	4. Preload adjustment (Defective)	DF-20
	5. Tooth contact between ring gear and drive pinion (Defective)	DF-34
	6. Bearing (Worn)	DF-20
Oil leak from rear differential	1. Oil (Level too high or wrong grade)	DF-3
	2. Side gear shaft oil seal (Worn or damaged)	DF-6
	3. Seal packing (Damaged)	DF-28

DIFFERENTIAL OIL

ON-VEHICLE INSPECTION

1. CHECK DIFFERENTIAL OIL

(a) Stop the vehicle on a level surface.

(b) Using a 10 mm socket hexagon wrench, remove the rear differential filler plug and gasket.

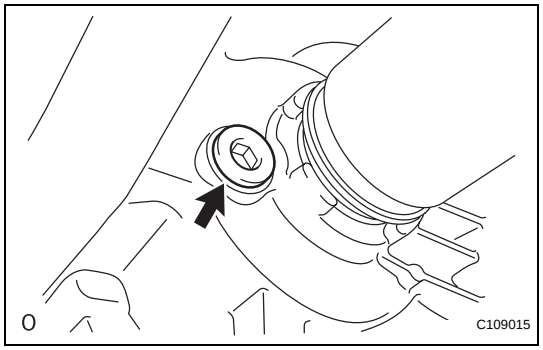

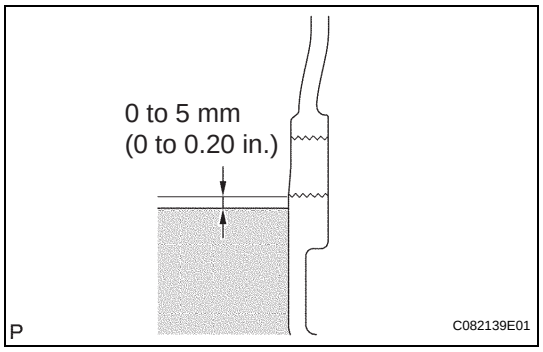

(c) Check that the oil level is between 0 to 5 mm (0 to 0.20 in.) from the bottom lip of the differential filler plug hole.

NOTICE:

- **After changing the oil seal, drive the vehicle and then check the oil level again.**
- **Too much or too little oil will lead to differential problems.**

HINT:

If necessary, fill the differential carrier assembly with hypoid gear oil.

Recommended viscosity:
SAE 90

Standard oil grade:
Hypoid gear oil SX API GL-5

Standard differential oil capacity:
0.45 to 0.55 liters (0.48 to 0.58 US qts., 0.40 to 0.48 Imp. qts.)

(d) Using a 10 mm socket hexagon wrench, install a new gasket and the rear differential filler plug.

Torque: 39 N*m (398 kgf*cm, 29 ft.*lbf)

REAR DIFFERENTIAL SIDE GEAR SHAFT OIL SEAL

COMPONENTS

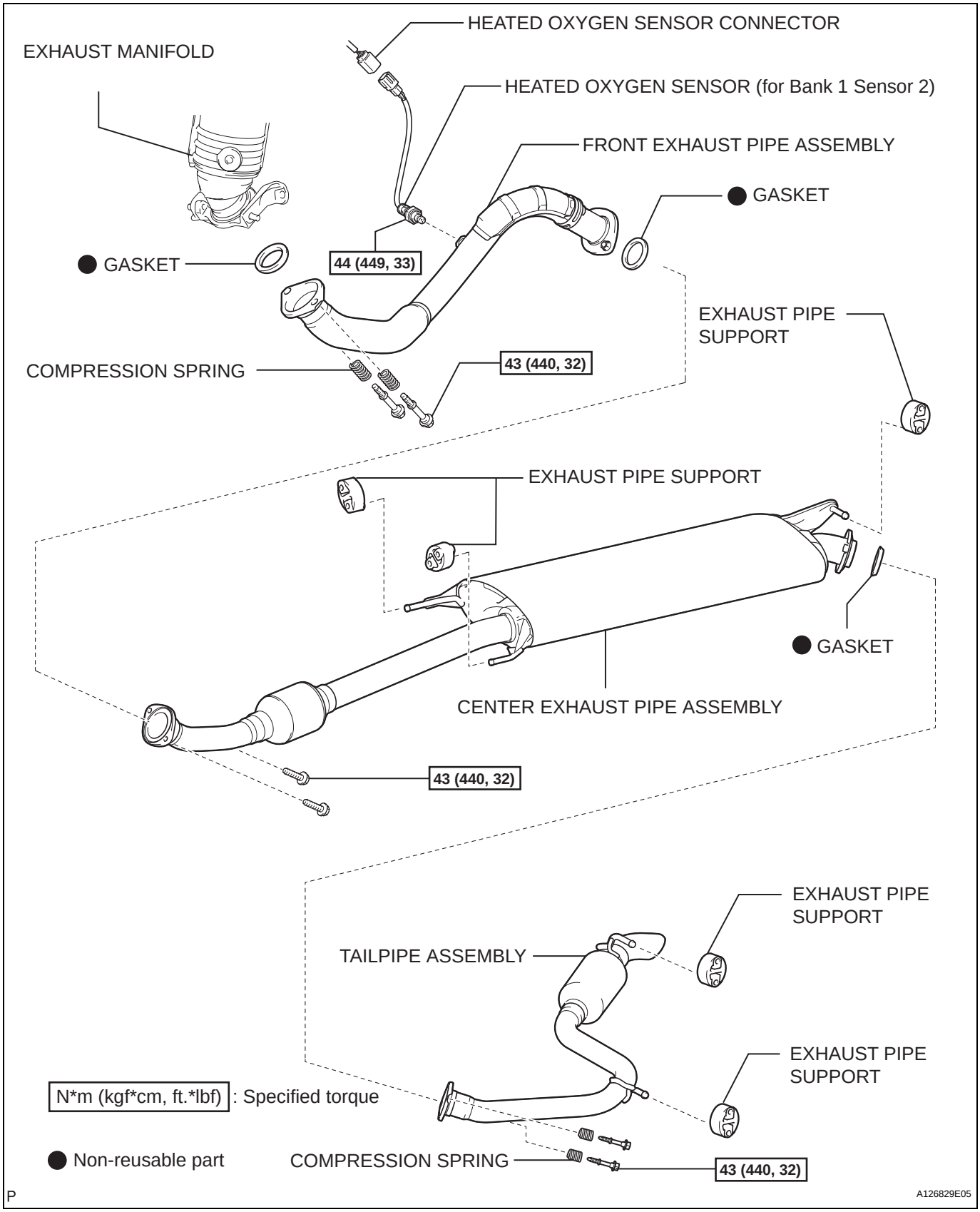

DF

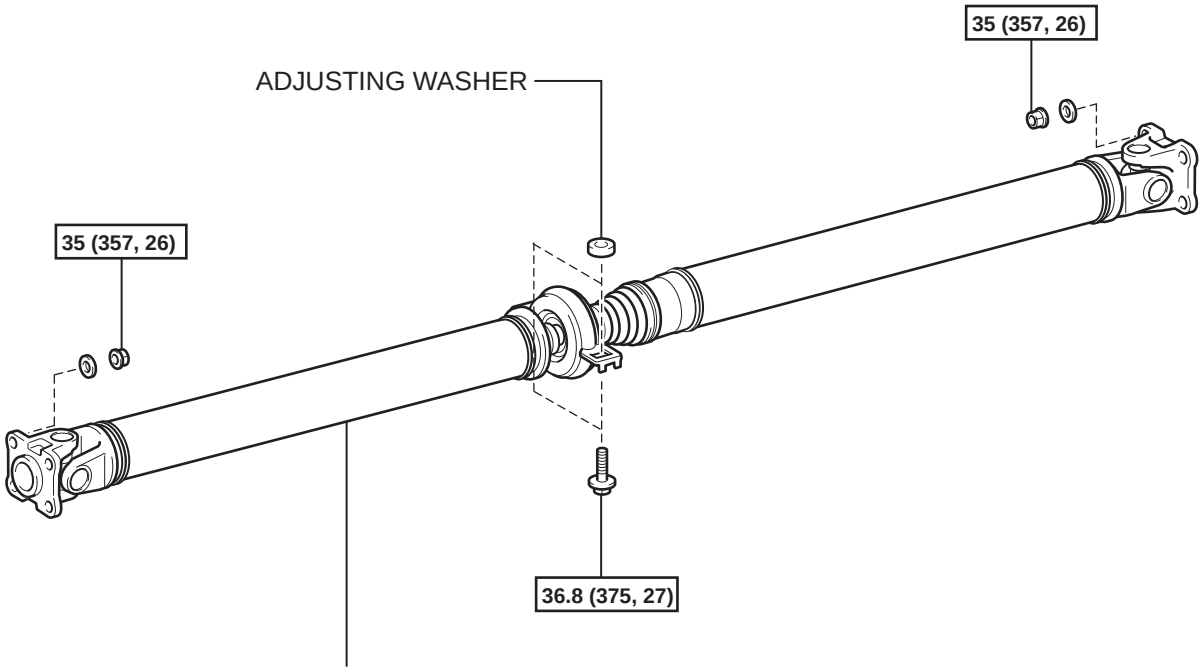

N*m (kgf*cm, ft.*lbf) : Specified torque

T

C129508E01

REAR DIFFERENTIAL SIDE GEAR SHAFT OIL SEAL

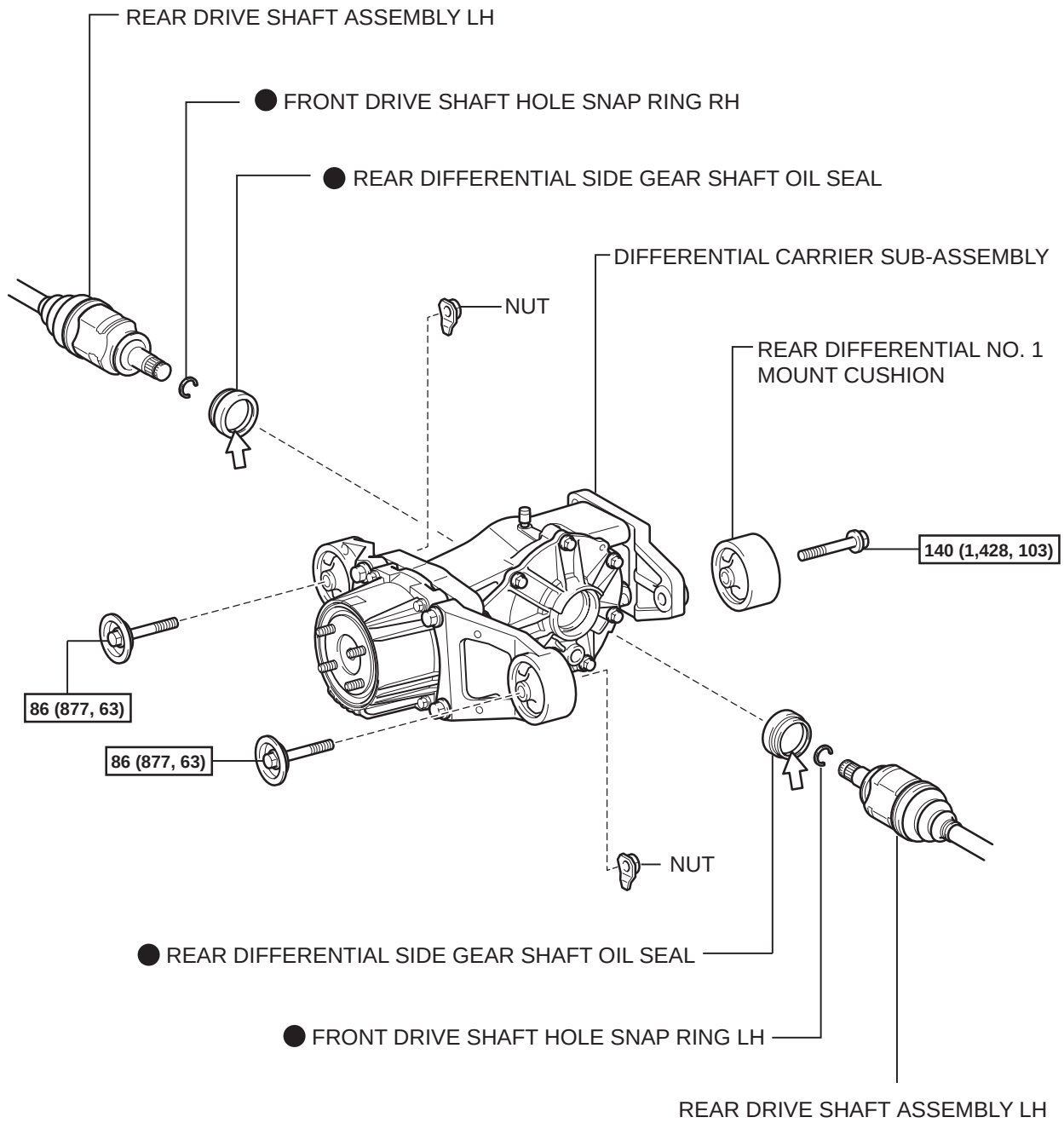

N*m (kgf*cm, ft.*lbf) : Specified torque

● Non-reusable part

⇦ Apply MP grease

T

C127376E06

DIAPHRAGM OIL SEAL

COMPONENTS

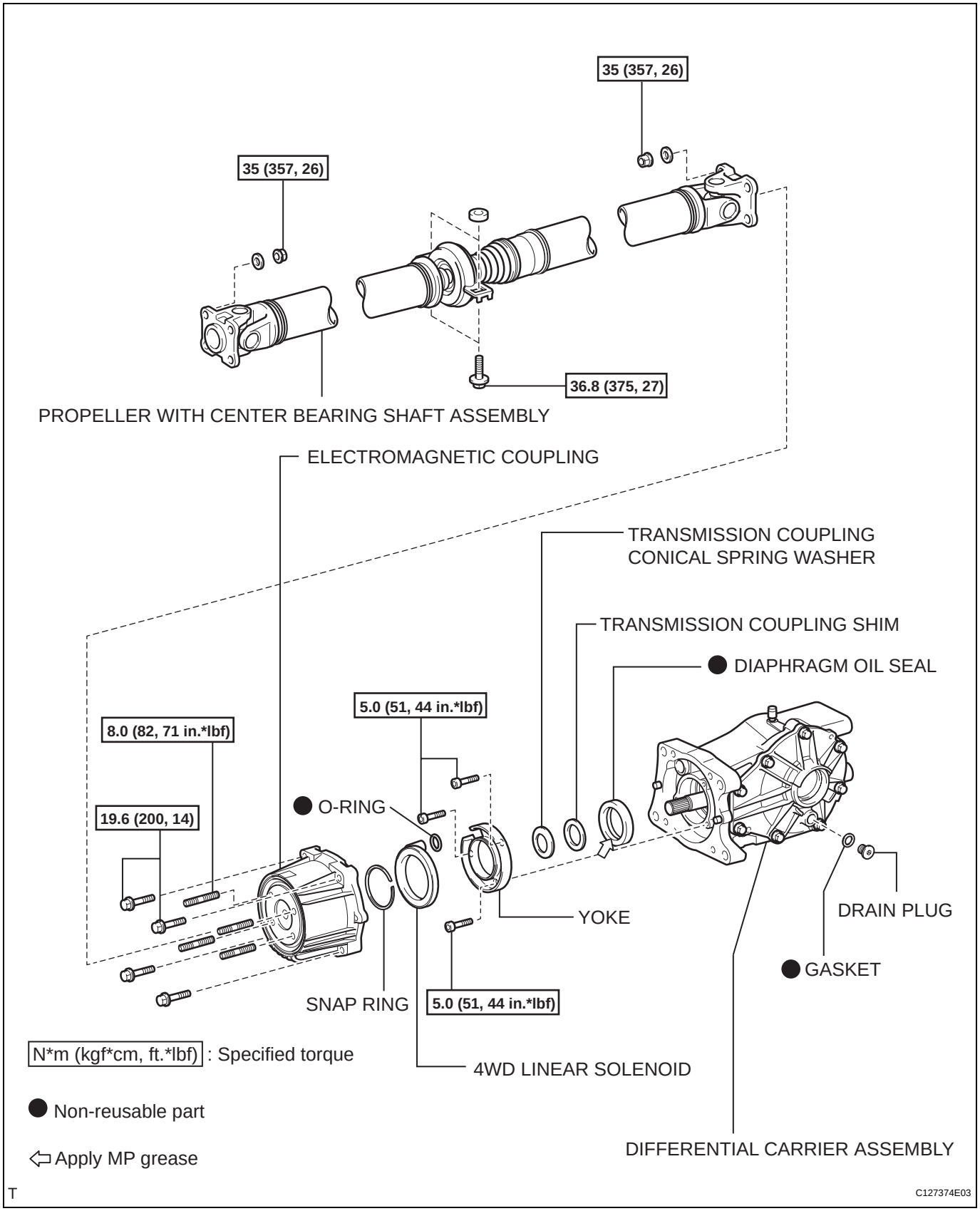

DF

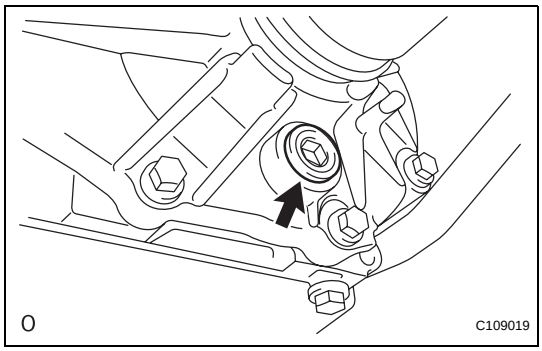

REMOVAL

1. **DRAIN DIFFERENTIAL OIL**
   (a) Using a 10 mm socket hexagon wrench, remove the rear differential drain plug and gasket, and drain the oil.
   (b) Install a new gasket to the rear differential drain plug.
   (c) Using a 10 mm socket hexagon wrench, install the rear differential drain plug and gasket.
2. **REMOVE PROPELLER WITH CENTER BEARING SHAFT ASSEMBLY (See page PR-3)**
3. **REMOVE ELECTROMAGNETIC COUPLING (See page DF-21)**
4. **REMOVE 4WD LINEAR SOLENOID (See page DF-22)**
5. **REMOVE YOKE (See page DF-22)**
6. **REMOVE TRANSMISSION COUPLING CONICAL SPRING WASHER (See page DF-22)**
7. **REMOVE TRANSMISSION COUPLING SHIM (See page DF-22)**
8. **REMOVE DIAPHRAGM OIL SEAL**
   (a) Using SST, remove the oil seal from the rear differential carrier.
   SST 09308-10010

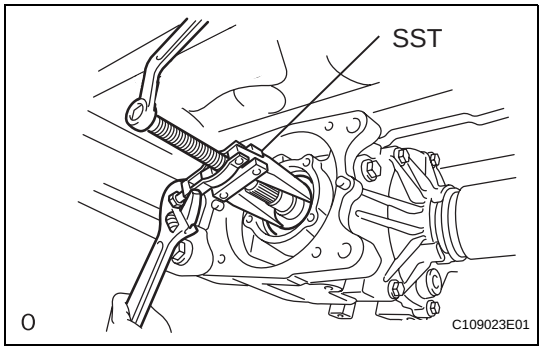

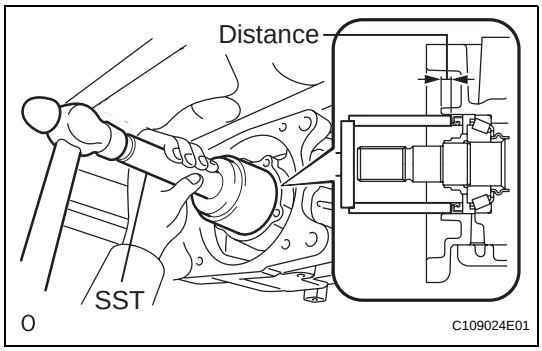

INSTALLATION

1. **INSTALL DIAPHRAGM OIL SEAL**
   (a) Apply a light coat of MP grease No. 2 to the lip of a new diaphragm oil seal.
   (b) Using SST and a hammer, tap the diaphragm oil seal into the rear differential carrier according to the specification.
   SST 09710-30021 (09710-03121), 09950-60010 (09951-00570), 09950-70010 (09951-07100)
   Standard distance:
   7.0 +-0.5 mm (0.28 +-0.02 in.)
2. **INSTALL TRANSMISSION COUPLING SHIM (See page DF-41)**
3. **INSTALL TRANSMISSION COUPLING CONICAL SPRING WASHER (See page DF-41)**
4. **INSTALL YOKE (See page DF-41)**
5. **INSTALL 4WD LINEAR SOLENOID (See page DF-41)**

6. **INSTALL ELECTROMAGNETIC COUPLING (See page DF-42)**

7. **TEMPORARILY INSTALL PROPELLER WITH CENTER BEARING SHAFT ASSEMBLY (See page PR-5)**

8. **FULLY TIGHTEN PROPELLER WITH CENTER BEARING SHAFT ASSEMBLY (See page PR-6)**

9. **INSPECT AND ADJUST JOINT ANGLE (See page PR-4)**

10. **ADD DIFFERENTIAL OIL**
    (a) Add differential oil (see page DF-3).

11. **CHECK FOR DIFFERENTIAL OIL LEAKAGE**
    If gas is leaking, tighten the areas necessary to stop the leak. Replace damaged parts as necessary.

REAR DIFFERENTIAL CARRIER ASSEMBLY

COMPONENTS

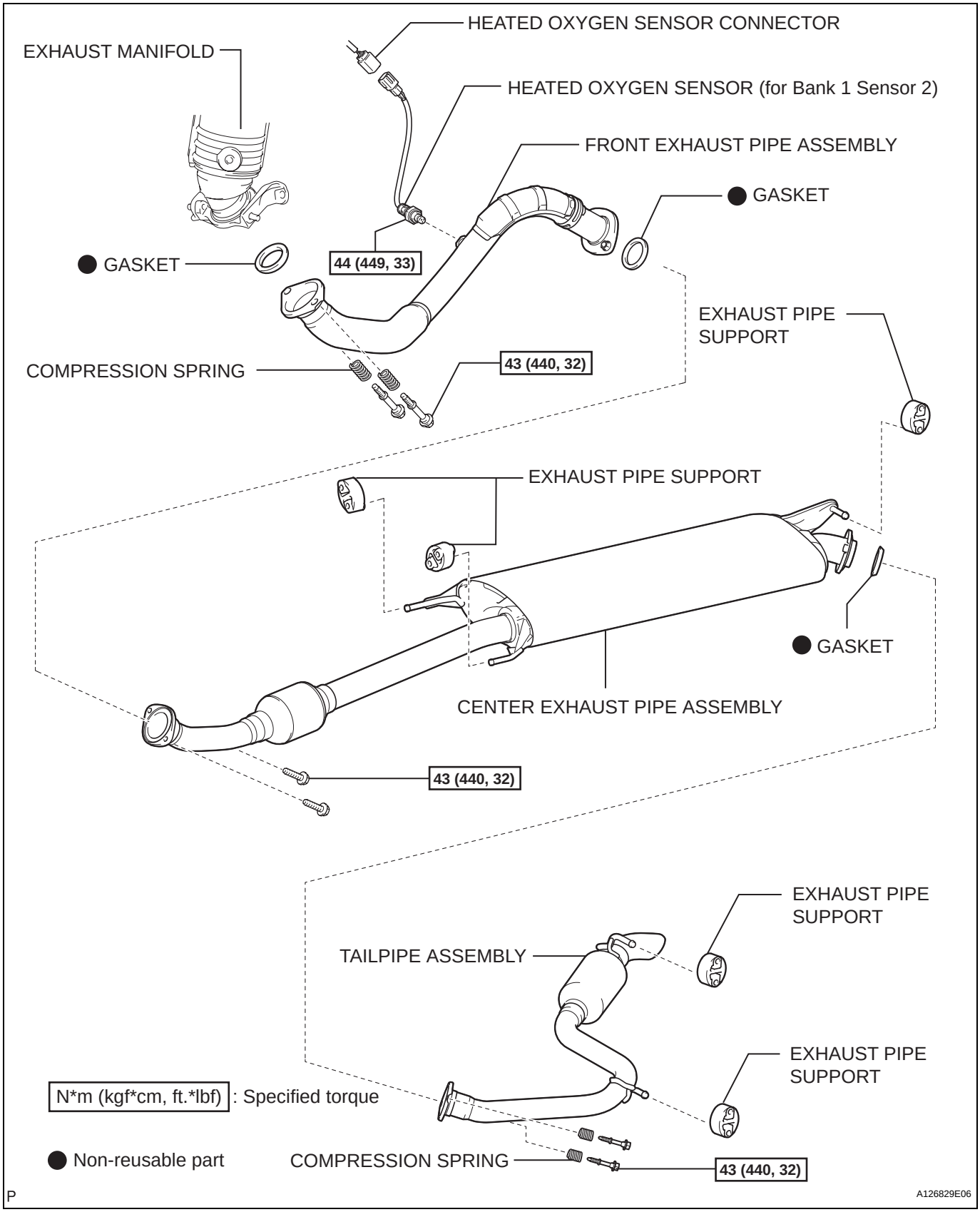

DF

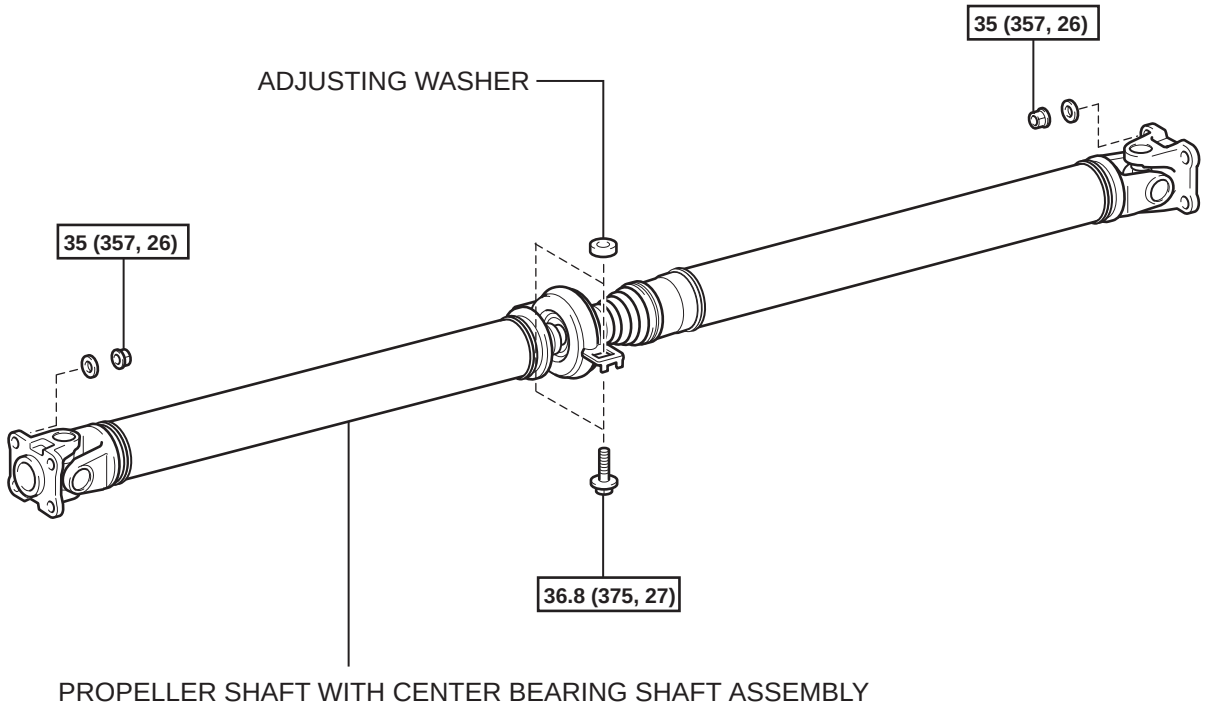

N*m (kgf*cm, ft.*lbf) : Specified torque

T

C129508E01

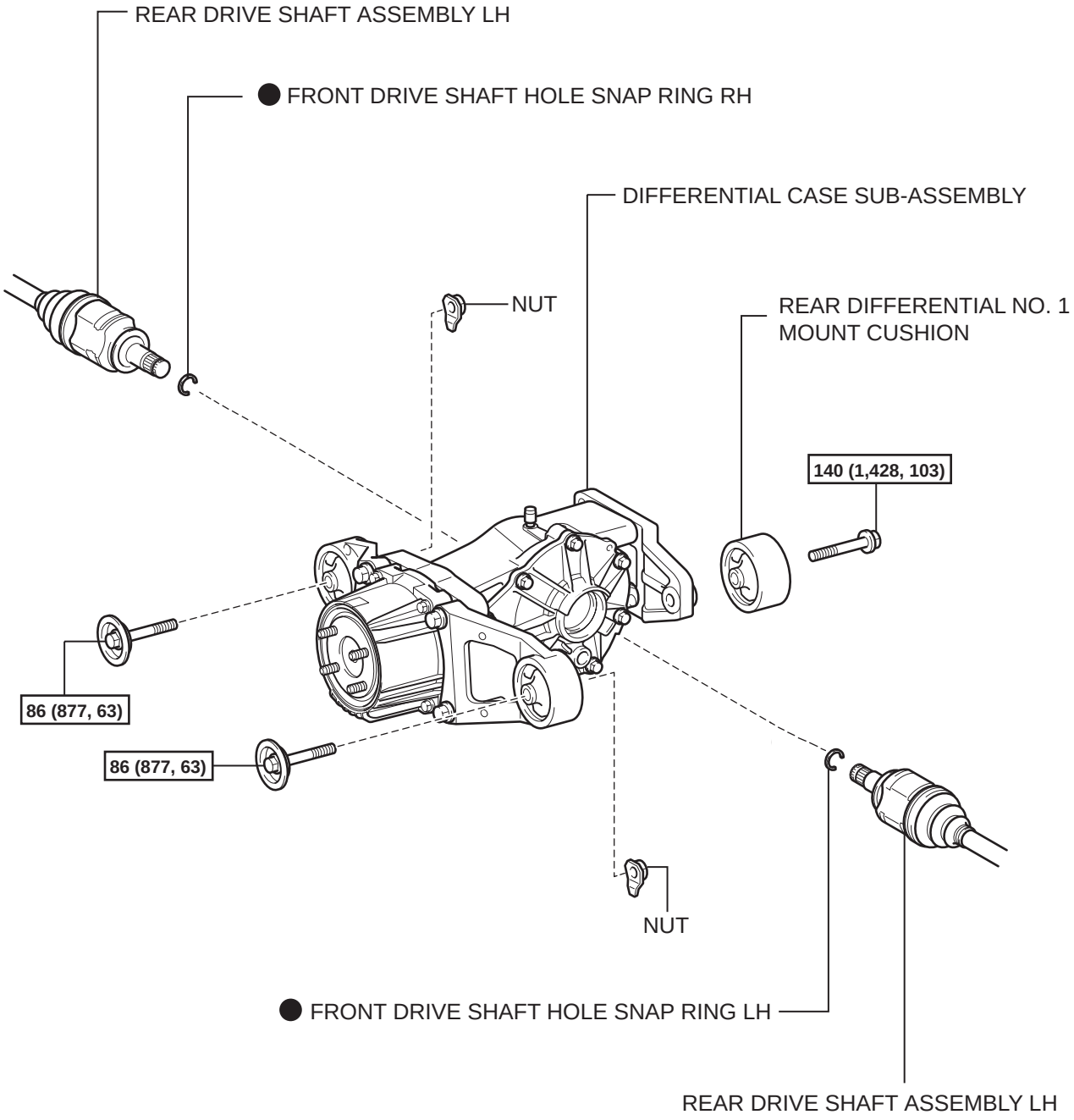

N*m (kgf*cm, ft.*lbf) : Specified torque

● Non-reusable part

T

C127376E07

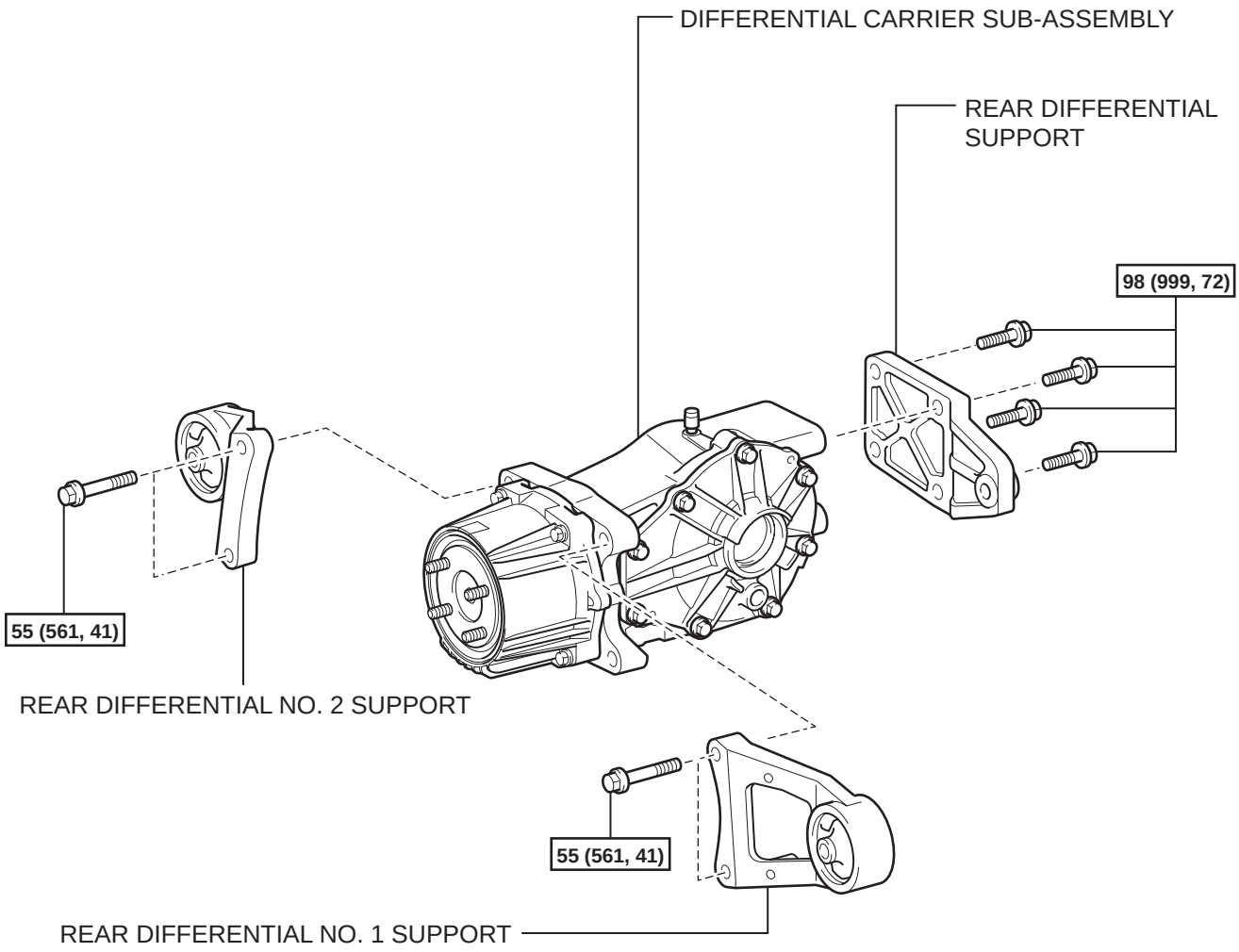

N*m (kgf*cm, ft.*lbf) : Specified torque

● Non-reusable part

T

C127377E03

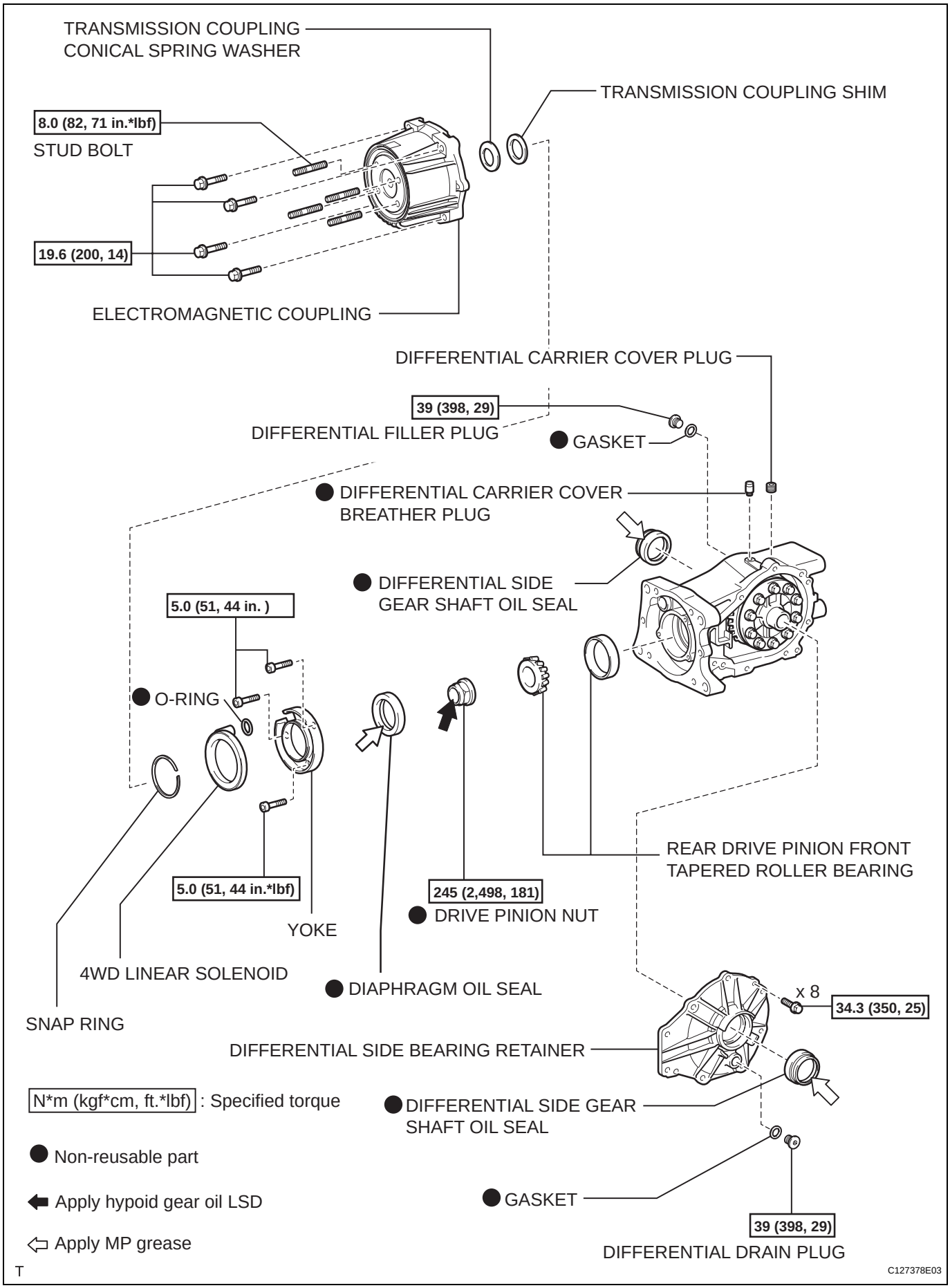
TRANSMISSION COUPLING CONICAL SPRING WASHER
TRANSMISSION COUPLING SHIM
8.0 (82, 71 in.*lbf)
STUD BOLT
19.6 (200, 14)
ELECTROMAGNETIC COUPLING
DIFFERENTIAL CARRIER COVER PLUG
39 (398, 29)
DIFFERENTIAL FILLER PLUG
GASKET
DIFFERENTIAL CARRIER COVER BREATHER PLUG
DIFFERENTIAL SIDE GEAR SHAFT OIL SEAL
5.0 (51, 44 in.)
O-RING
REAR DRIVE PINION FRONT TAPERED ROLLER BEARING
5.0 (51, 44 in.*lbf)
245 (2,498, 181)
DRIVE PINION NUT
YOKE
4WD LINEAR SOLENOID
DIAPHRAGM OIL SEAL
x 8
34.3 (350, 25)
SNAP RING
DIFFERENTIAL SIDE BEARING RETAINER
N*m (kgf*cm, ft.*lbf) : Specified torque
DIFFERENTIAL SIDE GEAR SHAFT OIL SEAL
Non-reusable part
GASKET
Apply hypoid gear oil LSD
39 (398, 29)
Apply MP grease
DIFFERENTIAL DRAIN PLUG
T
C127378E03

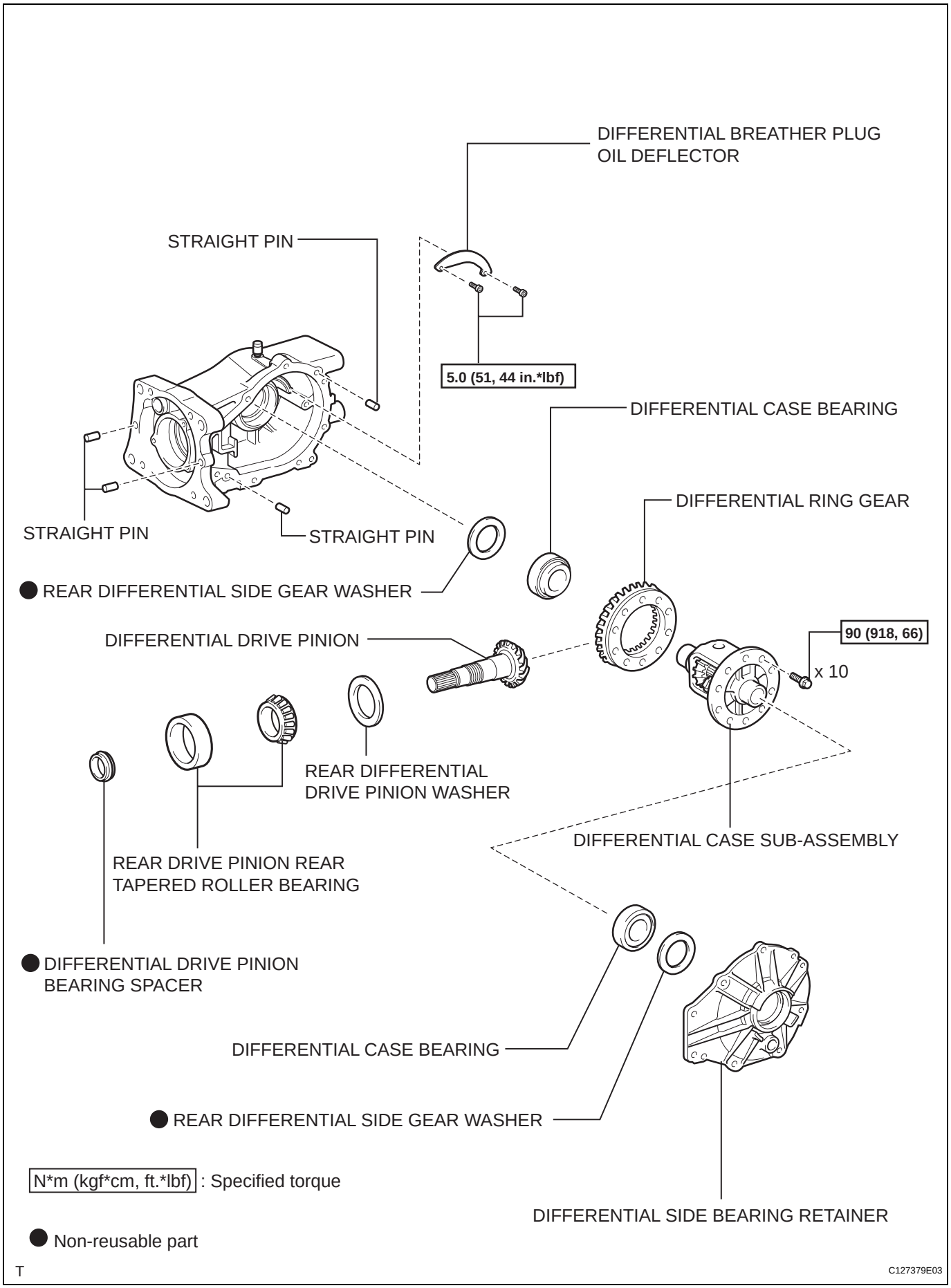
DIFFERENTIAL BREATHER PLUG
OIL DEFLECTOR
STRAIGHT PIN
5.0 (51, 44 in.*lbf)
DIFFERENTIAL CASE BEARING
DIFFERENTIAL RING GEAR
STRAIGHT PIN
STRAIGHT PIN
● REAR DIFFERENTIAL SIDE GEAR WASHER
DIFFERENTIAL DRIVE PINION
90 (918, 66)
x 10
REAR DIFFERENTIAL
DRIVE PINION WASHER
DIFFERENTIAL CASE SUB-ASSEMBLY
REAR DRIVE PINION REAR
TAPERED ROLLER BEARING
● DIFFERENTIAL DRIVE PINION
BEARING SPACER
DIFFERENTIAL CASE BEARING
● REAR DIFFERENTIAL SIDE GEAR WASHER
N*m (kgf*cm, ft.*lbf) : Specified torque
DIFFERENTIAL SIDE BEARING RETAINER
● Non-reusable part
T
C127379E03

DF