2013 Chevrolet Orlando Owner Manual

In Brief 1-1
Instrument Panel 1-2
Initial Drive Information 1-4
Vehicle Features 1-14
Performance and Maintenance 1-18

Keys, Doors, and Windows 2-1
Keys and Locks 2-1
Doors 2-8
Vehicle Security 2-9
Exterior Mirrors 2-11
Interior Mirrors 2-12
Windows 2-14
Roof 2-16

Seats and Restraints 3-1
Head Restraints 3-2
Front Seats 3-3
Rear Seats 3-8
Safety Belts 3-15
Airbag System 3-24
Child Restraints 3-32

Storage 4-1
Storage Compartments 4-1
Additional Storage Features ... 4-2
Roof Rack System 4-5

Instruments and Controls 5-1
Controls 5-2
Warning Lights, Gauges, and Indicators 5-7
Information Displays 5-21
Vehicle Messages 5-24
Vehicle Personalization 5-30

Lighting 6-1
Exterior Lighting 6-1
Interior Lighting 6-6
Lighting Features 6-7

Infotainment System 7-1
Introduction 7-1
Radio 7-7
Audio Players 7-13
Phone 7-18
Trademarks and License Agreements 7-29

Climate Controls 8-1
Climate Control Systems 8-1
Air Vents 8-6

Driving and Operating 9-1
Driving Information 9-2
Starting and Operating 9-13
Engine Exhaust 9-20
Automatic Transmission 9-21
Manual Transmission 9-24
Brakes 9-26
Ride Control Systems 9-28
Cruise Control 9-31
Object Detection Systems 9-33
Fuel 9-38
Towing 9-42
Conversions and Add-Ons ... 9-47

Vehicle Care 10-1
General Information 10-2
Vehicle Checks 10-4
Headlamp Aiming 10-25
Bulb Replacement 10-25
Electrical System 10-30
Wheels and Tires 10-37

Downloaded from www.Manualslib.com manuals search engine

2013 Chevrolet Orlando Owner Manual

Jump Starting 10-73
Towing 10-75
Appearance Care 10-78

Service and Maintenance . . . 11-1
General Information 11-1
Maintenance Schedule 11-2
Special Application Services 11-8
Additional Maintenance and Care 11-8
Recommended Fluids, Lubricants, and Parts 11-12
Maintenance Records 11-14

Technical Data 12-1
Vehicle Identification 12-1
Vehicle Data 12-2

Customer Information 13-1
Customer Information 13-1
Reporting Safety Defects 13-12
Vehicle Data Recording and Privacy 13-14

OnStar 14-1
OnStar Overview 14-1
OnStar Services 14-2
OnStar Additional Information 14-5

Index i-1

Downloaded from www.Manualslib.com manuals search engine

The names, logos, emblems, slogans, vehicle model names, and vehicle body designs appearing in this manual including, but not limited to, GM, the GM logo, CHEVROLET, the CHEVROLET Emblem, and ORLANDO are trademarks and/or service marks of General Motors LLC, its subsidiaries, affiliates, or licensors.

This manual describes features that may or may not be on your specific vehicle either because they are options that you did not purchase or due to changes subsequent to the printing of this owner manual. Please refer to the purchase documentation relating to your specific vehicle to confirm each of the features found on your vehicle. For vehicles first sold in Canada, substitute the name “General Motors of Canada Limited” for Chevrolet Motor Division wherever it appears in this manual.

Keep this manual in the vehicle for quick reference.

Propriétaires Canadiens

A French language copy of this manual can be obtained from your dealer or from:

On peut obtenir un exemplaire de ce guide en français auprès du concessionnaire ou à l'adresse suivante:

Helm, Incorporated
P.O. Box 07130
Detroit, MI 48207

1-800-551-4123
Numéro de poste 6438 de langue française
www.helminc.com

Litho in U.S.A.
Part No. 22810368 A First Printing

©2012 General Motors LLC. All Rights Reserved.

Downloaded from www.Manualslib.com manuals search engine

Using this Manual

To quickly locate information about the vehicle, use the Index in the back of the manual. It is an alphabetical list of what is in the manual and the page number where it can be found.

Danger, Warnings, and Cautions

Warning messages found on vehicle labels and in this manual describe hazards and what to do to avoid or reduce them.

Danger indicates a hazard with a high level of risk which will result in serious injury or death.

Warning or **Caution** indicates a hazard that could result in injury or death.

⚠ WARNING

These mean there is something that could hurt you or other people.

Notice: **This means there is something that could result in property or vehicle damage. This would not be covered by the vehicle's warranty.**

A circle with a slash through it is a safety symbol which means “Do Not,” “Do not do this,” or “Do not let this happen.”

Symbols

The vehicle has components and labels that use symbols instead of text. Symbols are shown along with the text describing the operation or information relating to a specific component, control, message, gauge, or indicator.

: This symbol is shown when you need to see your owner manual for additional instructions or information.

: This symbol is shown when you need to see a service manual for additional instructions or information.

Downloaded from www.Manualslib.com manuals search engine

Vehicle Symbol Chart

Here are some additional symbols that may be found on the vehicle and what they mean. For more information on the symbol, refer to the Index.

: Airbag Readiness Light

: Air Conditioning

: Antilock Brake System (ABS)

: Audio Steering Wheel Controls or OnStar®

: Brake System Warning Light

: Charging System

: Cruise Control

: Engine Coolant Temperature

: Exterior Lamps

: Fog Lamps

: Fuel Gauge

: Fuses

: Headlamp High/Low-Beam Changer

: LATCH System Child Restraints

: Malfunction Indicator Lamp

: Oil Pressure

: Power

: Remote Vehicle Start

: Safety Belt Reminders

: Tire Pressure Monitor

: Traction Control/StabiliTrak®

: Windshield Washer Fluid

Downloaded from www.Manualslib.com manuals search engine

✍ NOTES

Downloaded from www.Manualslib.com manuals search engine

In Brief

Instrument Panel
Instrument Panel 1-2

Initial Drive Information
Initial Drive Information 1-4
Remote Keyless Entry (RKE) System 1-4
Remote Vehicle Start 1-4
Door Locks 1-5
Liftgate 1-6
Windows 1-6
Seat Adjustment 1-6
Second Row Seats 1-8
Third Row Seats 1-8
Heated Seats 1-8
Head Restraint Adjustment 1-8
Safety Belts 1-9
Mirror Adjustment 1-9
Steering Wheel Adjustment 1-10
Interior Lighting 1-10
Exterior Lighting 1-11
Windshield Wiper/Washer 1-12
Climate Controls 1-13
Transmission 1-14

Vehicle Features
Radio(s) 1-14
Satellite Radio 1-15
Portable Audio Devices 1-16
Bluetooth® 1-16
Steering Wheel Controls 1-16
Cruise Control 1-17
Driver Information Center (DIC) 1-17
Ultrasonic Parking Assist 1-17
Storage Compartments 1-18
Power Outlets 1-18

Performance and Maintenance
Traction Control System (TCS) 1-18
StabiliTrak® System 1-19
Tire Pressure Monitor 1-19
Tire Sealant and Compressor Kit 1-19
Engine Oil Life System 1-20
Driving for Better Fuel Economy 1-20
Roadside Assistance Program 1-20
OnStar® 1-21

Downloaded from www.Manualslib.com manuals search engine

Instrument Panel

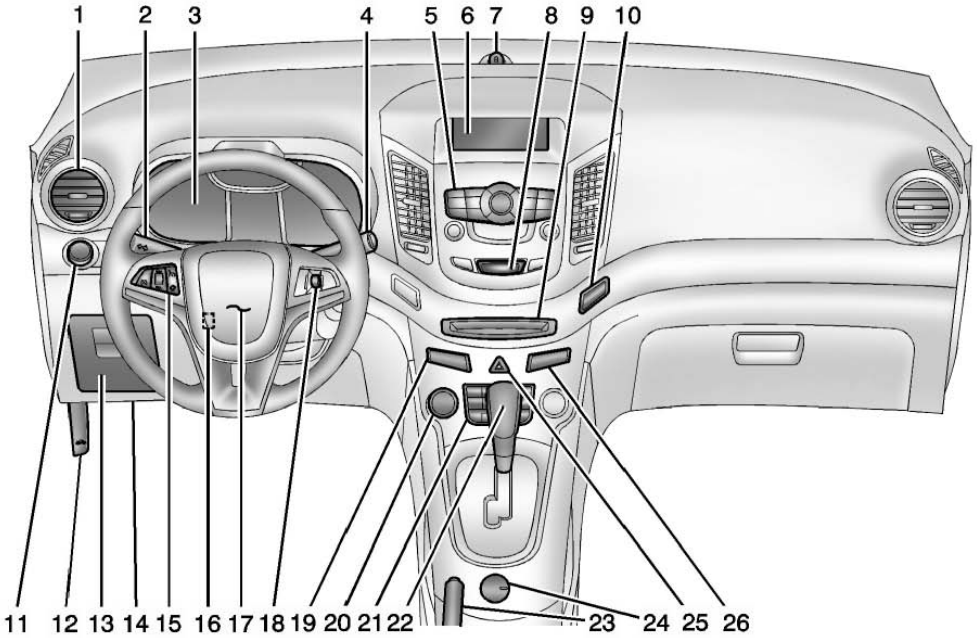

Downloaded from www.Manualslib.com manuals search engine

1. *Air Vents on page 8-6*.
2. Turn and Lane-Change Lever. See *Turn and Lane-Change Signals on page 6-4*.

   Headlamp High/Low-Beam Changer on page 6-2.
3. *Instrument Cluster on page 5-8*.
4. *Windshield Wiper/Washer on page 5-3*.

   Rear Window Wiper/Washer on page 5-4.
5. *Infotainment on page 7-1*.
6. Infotainment Display.
7. Light Sensor. See *Automatic Headlamp System on page 6-3*.
8. *Instrument Panel Storage on page 4-1*.

   USB Port and Auxiliary Input Jack (Inside Instrument Panel Storage). See *Auxiliary Devices on page 7-15*
9. *CD Player on page 7-13*.
10. TCS/StabiliTrak Button. See *StabiliTrak® System on page 9-29*.
11. *Exterior Lamp Controls on page 6-1*.

    Instrument Panel Illumination Control on page 6-6.

    Front Fog Lamps on page 6-5.
12. Hood Release. See *Hood on page 10-4*.
13. *Front Storage on page 4-1*.
14. Data Link Connector (DLC) (Out of View). See *Malfunction Indicator Lamp on page 5-12*.
15. *Cruise Control on page 9-31*.
16. *Steering Wheel Adjustment on page 5-2*.
17. *Horn on page 5-3*.
18. *Steering Wheel Controls on page 5-3*.
19. *Power Door Locks on page 2-7*.
20. *Heated Front Seats on page 3-6* (If Equipped).
21. *Climate Control Systems on page 8-1*.

    Automatic Climate Control System on page 8-3.
22. Shift Lever. See *Automatic Transmission on page 9-21* or *Manual Transmission on page 9-24*.
23. *Parking Brake on page 9-27*.
24. *Power Outlets on page 5-6*.
25. *Hazard Warning Flashers on page 6-4*.
26. Passenger Safety Belt Reminder Light. See *Safety Belt Reminders on page 5-10*.

Downloaded from www.Manualslib.com manuals search engine

Initial Drive Information

This section provides a brief overview about some of the important features that may or may not be on your specific vehicle.

For more detailed information, refer to each of the features which can be found later in this owner manual.

Remote Keyless Entry (RKE) System

The Remote Keyless Entry (RKE) transmitter may work up to 20 m (65 ft) away from the vehicle.

RKE Transmitter with Remote Start Shown

Press the key release button to extend the key blade. The key can be used for the ignition and all locks.

: Press to unlock the driver door or all doors.

: Press to lock all doors.

Lock and unlock feedback can be personalized. See *Vehicle Personalization on page 5-30*.

: Press and hold briefly to initiate vehicle locator. Press and hold for at least three seconds to sound the panic alarm. Press again to cancel the panic alarm.

See *Keys on page 2-1* and *Remote Keyless Entry (RKE) System Operation on page 2-3*.

Remote Vehicle Start

For vehicles with this feature, the engine can be started from outside the vehicle.

Starting the Vehicle

1. Aim the RKE transmitter at the vehicle.
2. Press and release .
3. Immediately after completing Step 2, press and hold for at least two seconds or until the turn signal lamps flash.

Downloaded from www.Manualslib.com manuals search engine

When the engine starts, the parking lamps will turn on and remain on as long as the engine is running. The doors will be locked and the climate control system may come on.

The engine will continue to run for 10 minutes. Repeat the steps for a 10-minute time extension. Remote start can be extended only once.

Canceling a Remote Start

To cancel a remote start, do one of the following:

- Aim the RKE transmitter at the vehicle and press and hold until the parking lamps turn off.
- Turn on the hazard warning flashers.
- Turn the vehicle on and then off.

See *Remote Vehicle Start on page 2-5*.

Door Locks

To lock or unlock the vehicle from outside, use the Remote Keyless Entry (RKE) transmitter or the key. From inside the vehicle, use the power door lock switch.

See *Door Locks on page 2-6*.

Power Door Locks

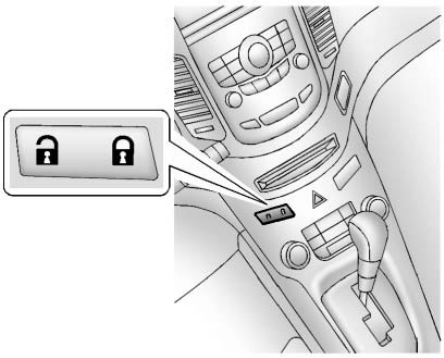

The power door lock switch is on the instrument panel.

: Press to unlock the doors.

: Press to lock the doors.

See *Power Door Locks on page 2-7*.

Safety Locks

The rear door safety locks prevent passengers from opening the rear doors from inside the vehicle.

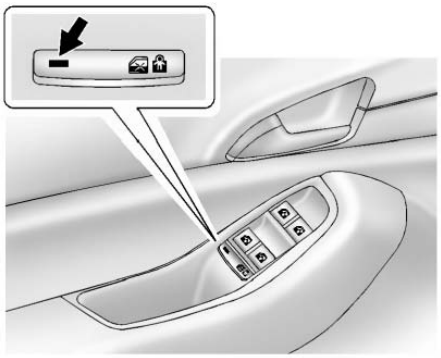

Press to activate the safety locks on the rear doors. The indicator light comes on when activated.

The rear door power windows are also disabled.

Downloaded from www.Manualslib.com manuals search engine

Press again to deactivate the lockout switch.

See *Safety Locks on page 2-7*.

Liftgate

Unlock the vehicle before opening the liftgate.

Press the touch pad located in the handle of the liftgate, above the license plate, and lift up to open.

Do not press the touch pad while closing the liftgate. This will cause the liftgate to be unlatched.

Always close the liftgate before driving.

For more information see *Liftgate on page 2-8*.

Windows

Power Windows

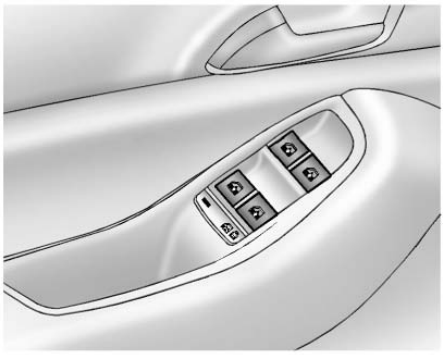

On vehicles with power windows, the switches are on the doors.

Push the switch down to open the window. Pull the front of the switch up to close it.

For more information, see *Power Windows on page 2-14*.

Seat Adjustment

Manual Seats

Seat Position

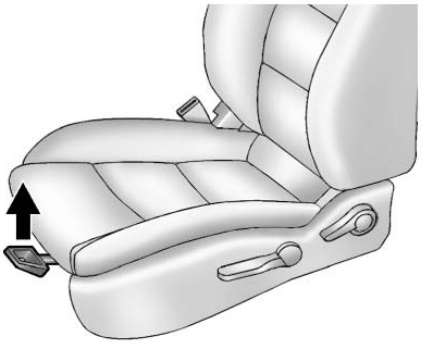

To adjust a manual seat:

1. Pull the handle at the front of the seat.
2. Slide the seat to the desired position and release the handle.
3. Try to move the seat back and forth to be sure it is locked in place.

See *Seat Adjustment on page 3-3*.

Downloaded from www.Manualslib.com manuals search engine

Height Adjustment

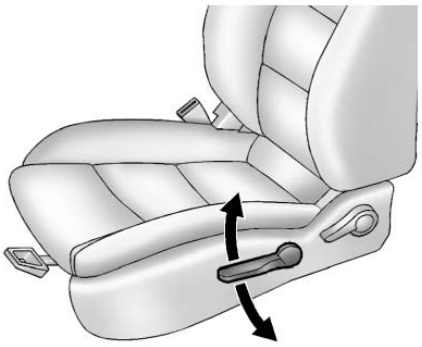

If available, move the lever up or down to manually raise or lower the seat.

Power Seats

To adjust the power driver seat:

- Move the seat forward or rearward by sliding the control forward or rearward.
- Raise or lower the front part of the seat cushion by moving the front of the control up or down.
- Raise or lower the entire seat by moving the rear of the control up or down.

See *Power Seat Adjustment on page 3-4*.

Reclining Seatbacks

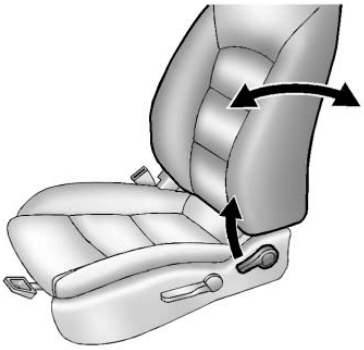

To recline the seatback:

1. Lift the lever.
2. Move the seatback to the desired position, then release the lever to lock the seatback in place.

   Do not lean against the seatback while adjusting it.
3. Push and pull on the seatback to make sure it is locked.

Downloaded from www.Manualslib.com manuals search engine

To return the seatback to an upright position:

1. Lift the lever fully without applying pressure to the seatback, and the seatback returns to the upright position.
2. Push and pull on the seatback to make sure it is locked.

See *Reclining Seatbacks on page 3-4*.

Second Row Seats

The second row seats can be tumbled to provide access to the third row seat, and the seatbacks can be reclined or folded forward.

See *Second Row Seats on page 3-8*.

Third Row Seats

The third row seats can be stowed for more cargo space. See *Third Row Seats on page 3-12*.

Heated Seats

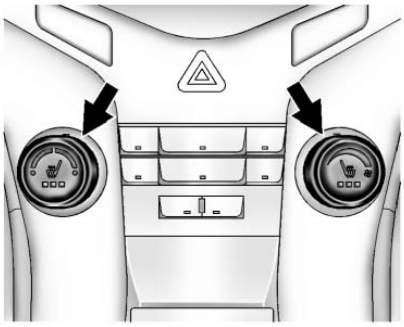

Automatic Climate Control System Buttons Shown

If available, the buttons are on the instrument panel, near the center. To operate, the engine must be running.

Press or to heat the driver or passenger seat.

See *Heated Front Seats on page 3-6*.

Head Restraint Adjustment

Do not drive until the head restraints for all occupants are installed and adjusted properly.

To achieve a comfortable seating position, change the seatback recline angle as little as necessary while keeping the seat and the head restraint height in the proper position.

See *Head Restraints on page 3-2* and *Seat Adjustment on page 3-3*.

Downloaded from www.Manualslib.com manuals search engine

Safety Belts

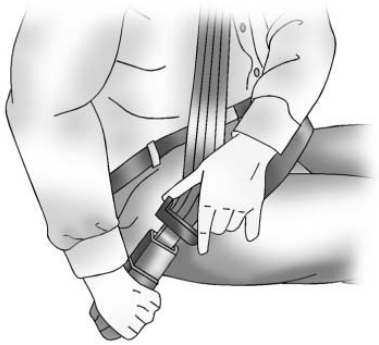

Refer to the following sections for important information on how to use safety belts properly:

- *Safety Belts on page 3-15*.
- *How to Wear Safety Belts Properly on page 3-16*.
- *Lap-Shoulder Belt on page 3-17*.
- *Lower Anchors and Tethers for Children (LATCH System) on page 3-39*.

Mirror Adjustment

Manual Mirrors

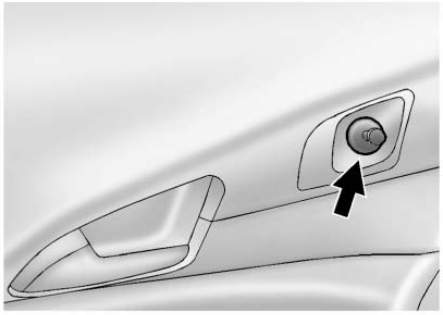

Vehicles with a manual mirror adjustment have controls next to each mirror.

See *Manual Mirrors on page 2-11*.

Power Mirrors

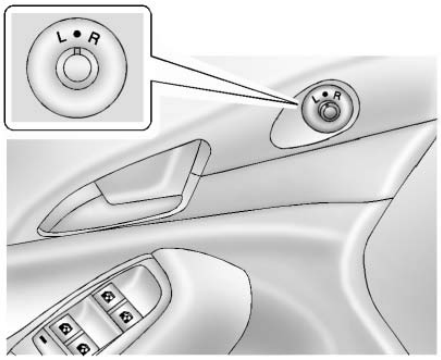

Vehicles with power mirrors have controls located on the driver door.

To adjust the mirrors:

1. Turn the selector switch to L (Left) or R (Right) to choose the driver or passenger mirror.
2. Move the control to adjust the mirror.
3. Turn the selector switch to the ● position to deselect the mirror.

See *Power Mirrors on page 2-12*.

Downloaded from www.Manualslib.com manuals search engine

Interior Mirror

Hold the inside rearview mirror in the center to move it for a clearer view of behind your vehicle. Adjust the inside rearview mirror by moving it up and down or side to side. Adjust the mirror to avoid glare from the headlamps behind you. Push the tab forward for daytime use and pull it for nighttime use. See *Manual Rearview Mirror on page 2-12*.

On vehicles with an automatic dimming inside rearview mirror, the mirror reduces glare from the headlamps of the vehicle behind you. The dimming feature and indicator light come on each time the vehicle is started. See *Automatic Dimming Rearview Mirror on page 2-13*.

Steering Wheel Adjustment

The vehicle may have a tilt or tilt and telescoping steering wheel.

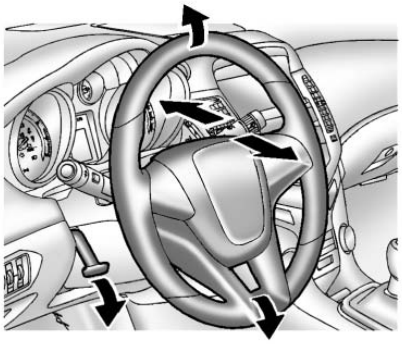

Tilt Steering Wheel

To adjust the steering wheel:

1. Pull the lever down.
2. Move the steering wheel up or down.
3. Push the lever up to lock the steering wheel in place.

Tilt and Telescoping Steering Wheel

To adjust the steering wheel:

1. Pull the lever down.
2. Move the steering wheel up or down.
3. Pull or push the steering wheel closer or away from you.
4. Push the lever up to lock the steering wheel in place.

Do not adjust the steering wheel while driving.

Interior Lighting

Dome Lamps

The dome lamp controls are located in the headliner.

: Press to turn the lamps off, even when a door is open.

Downloaded from www.Manualslib.com manuals search engine

: Press to turn the lamps on automatically when a door is opened.

: Press to turn on the dome lamps.

Reading Lamps

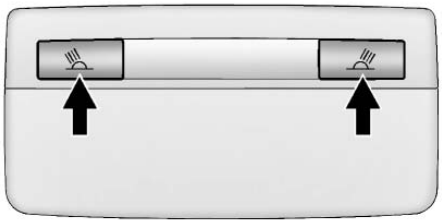

The reading lamps are located in the overhead console.

or : Press the button near each lamp to turn it on or off.

For more interior lamps information, see *Instrument Panel Illumination Control on page 6-6*.

Exterior Lighting

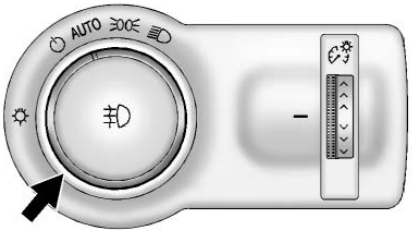

The exterior lamp control is on the instrument panel to the outboard side of the steering column.

: Briefly turn to this position to turn the automatic light control off or on again.

AUTO: Turns the headlamps on automatically at normal brightness, together with the parking lamps, taillamps, license plate lamps, sidemarker lamps, and instrument panel lights.

: Turns on the parking lamps, taillamps, license plate lamps, sidemarker lamps, and instrument panel lights.

: Turns on the headlamps, parking lamps, taillamps, license plate lamps, sidemarker lamps, and instrument panel lights. A warning chime sounds if the driver door is opened when the ignition switch is off and the headlamps are on.

: For vehicles with fog lamps, press to turn the lamps on or off.

See:

- *Exterior Lamp Controls on page 6-1*
- *Daytime Running Lamps (DRL) on page 6-2*
- *Front Fog Lamps on page 6-5*

Downloaded from www.Manualslib.com manuals search engine

Windshield Wiper/Washer

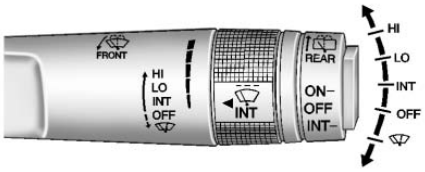

With the ignition in ACC/ACCESSORY or ON/RUN/START, move the windshield wiper lever to select the wiper speed.

HI: Use for fast wipes.

LO: Use for slow wipes.

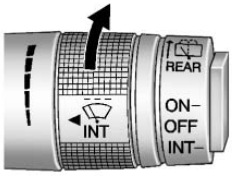

INT: Move the lever up to INT for intermittent wipes, then turn the INT band up for more frequent wipes or down for less frequent wipes. If the vehicle has Rainsense™, see the following Rainsense information.

OFF: Use to turn the wipers off.

: For a single wipe, briefly move the wiper lever down. For several wipes, hold the wiper lever down.

Windshield Washer

Pull the windshield wiper lever toward you to spray windshield washer fluid and activate the wipers.

See *Windshield Wiper/Washer on page 5-3* and *Rear Window Wiper/Washer on page 5-4*, if equipped.

Rear Window Wiper/Washer

The rear wiper controls are on the end of the windshield wiper lever.

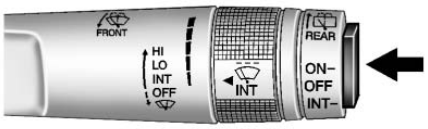

ON: Press the upper portion of the button for continuous rear window wipes.

OFF: The rear wiper turns off when the button is returned to the middle position.

INT: Press the lower portion of the button to set a delay between wipes.

: Push the windshield wiper lever forward to spray washer fluid on the rear window.

See *Windshield Wiper/Washer on page 5-3* and *Rear Window Wiper/Washer on page 5-4*.

Downloaded from www.Manualslib.com manuals search engine

Climate Controls

The heating, cooling, defrosting, and ventilation for the vehicle can be controlled with these systems.

Vehicles without Air Conditioning

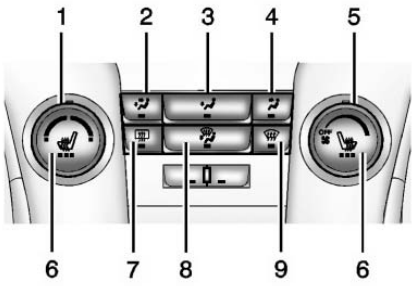

1. Temperature Control
2. Bi-level Air Mode
3. Floor Air Mode
4. Vent Air Mode
5. Fan Control
6. Driver and Passenger Heated Seats (If Equipped)
7. Rear Window Defogger
8. Defog
9. Defrost

Vehicles with Air Conditioning

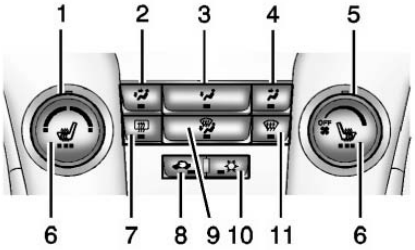

1. Temperature Control
2. Bi-level Air Mode
3. Floor Air Mode
4. Vent Air Mode
5. Fan Control
6. Driver and Passenger Heated Seats (If Equipped)
7. Rear Window Defogger
8. Recirculation
9. Defog
10. Air Conditioning
11. Defrost

Automatic Climate Control System

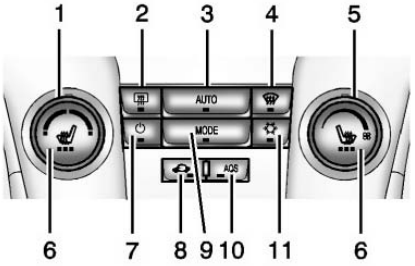

1. Temperature Control
2. Rear Window Defogger
3. AUTO (Automatic Operation)
4. Defrost
5. Fan Control

Downloaded from www.Manualslib.com manuals search engine

6. Driver and Passenger Heated Seats (If Equipped)
7. Power
8. Recirculation
9. MODE (Air Delivery Mode)
10. AQS (Air Quality Sensor)
11. Air Conditioning

See *Climate Control Systems on page 8-1* or *Automatic Climate Control System on page 8-3* (If Equipped).

Transmission

Driver Shift Control (DSC)

Driver Shift Control (DSC) allows you to shift an automatic transmission similar to a manual transmission. To use the DSC feature:

1. Move the shift lever from D (Drive) to the left into the (+) or (−) manual position.
2. Press the shift lever forward (+) to upshift or rearward (−) to downshift. An M and the current gear will be displayed in the Driver Information Center (DIC).

See *Manual Mode on page 9-23*.

Up-Shift Light

If the vehicle has a manual transmission, it will have an up-shift light that indicates when to shift to the next higher gear for the best fuel economy.

See *Manual Transmission on page 9-24*.

Vehicle Features

Radio(s)

⏻ **:** Press to turn the system on and off. Turn to increase or decrease the volume.

BAND: Press to choose between FM, AM, or SiriusXM®, if equipped.

MENU: Turn to select radio stations. Press to select a menu.

⏮ **:** Press to seek the previous station or track.

⏭ **:** Press to seek the next station or track.

Buttons 1 to 6: Press to save and select favorite stations.

INFO: Press to show available information about the current station or track.

For more information about these and other radio features, see *Operation on page 7-4*.

Downloaded from www.Manualslib.com manuals search engine

Storing a Favorite Station

Stations from all bands can be stored in the favorite lists in any order. Up to six stations can be stored in each favorite page and the number of available favorite pages can be set.

To store the station to a position in the list, press the corresponding numeric button 1 to 6 until a beep is heard.

For more information, see “Storing a Station as a Favorite” in *AM-FM Radio on page 7-7*.

Setting the Clock

Adjusting the Time

1. Press the CONFIG button and select Time Settings.
2. Select Set Time.
3. Turn the MENU knob to adjust the highlighted number.
4. Press the MENU knob to select the next number.
5. To save the time and return to the Time Settings menu, press the BACK button at any time or press the MENU knob after adjusting the minutes.

Setting the 12/24 Hour Format

1. Press the CONFIG button and select Time Settings.
2. Highlight 12/24 Hour Format.
3. Press the MENU knob to select the 12 hour or 24 hour display format.

For more information, see *Clock on page 5-5*.

Satellite Radio

Vehicles with a SiriusXM® satellite radio tuner and a valid SiriusXM satellite radio subscription can receive SiriusXM programming.

SiriusXM Satellite Radio Service

SiriusXM is a satellite radio service based in the 48 contiguous United States and 10 Canadian provinces. SiriusXM satellite radio has a wide variety of programming and commercial-free music, coast to coast, and in digital-quality sound. A fee is required to receive the SiriusXM service.

Refer to:

- www.siriusxm.com or call 1-866-635-2349 (U.S.).
- www.xmradio.ca or call 1-877-209-0079 (Canada).

See *Satellite Radio on page 7-9*.

Downloaded from www.Manualslib.com manuals search engine

Portable Audio Devices

Some vehicles have a 3.5 mm (1/8 in) auxiliary input and a USB port in the center console bin. External devices such as iPods®, laptop computers, MP3 players, CD changers, and USB drives may be connected, depending on the audio system.

See *Auxiliary Devices on page 7-15*.

Bluetooth®

The Bluetooth® system allows users with a Bluetooth-enabled mobile phone to make and receive hands-free calls using the vehicle audio system and controls.

The Bluetooth-enabled mobile phone must be paired with the in-vehicle Bluetooth system before it can be used in the vehicle. Not all phones will support all functions.

See *Bluetooth (Overview) on page 7-18* or *Bluetooth (Voice Recognition) on page 7-23* or *Bluetooth (Infotainment Controls) on page 7-19*.

Steering Wheel Controls

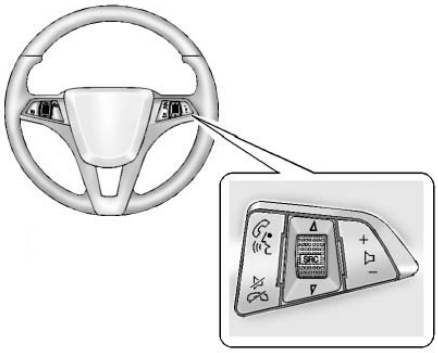

For vehicles with audio steering wheel controls, some audio controls can be adjusted at the steering wheel.

/ : Press to interact with the available Bluetooth and OnStar system.

/ : Press to silence the vehicle speakers only. Press again to turn the sound on. For vehicles with OnStar or Bluetooth systems, press to reject an incoming call, or to end a current call.

△ SRC ▽ : Turn △ or ▽ to select a radio band or audio source.

Press △ or ▽ to select the next or previous favorite radio station, CD, or MP3 track.

Press SRC to change between radio and CD or DVD.

+ − : Press + to increase or − to decrease the volume.

For more information, see *Steering Wheel Controls on page 5-3*.

Downloaded from www.Manualslib.com manuals search engine

Cruise Control

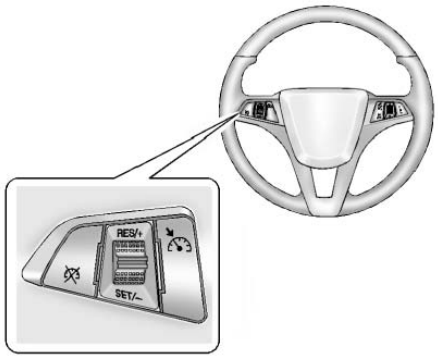

For vehicles with cruise control:

: Press to turn the cruise control system on and off.

RES/+: Move the thumbwheel up to resume a previously set speed or to accelerate.

SET/−: Move the thumbwheel down to set a speed or to make the vehicle decelerate.

: Press to disengage cruise control without erasing the set speed from memory.

See *Cruise Control on page 9-31*.

Driver Information Center (DIC)

The DIC display is in the center of the instrument cluster. It shows the status of many vehicle systems. The controls for the DIC are on the turn signal lever.

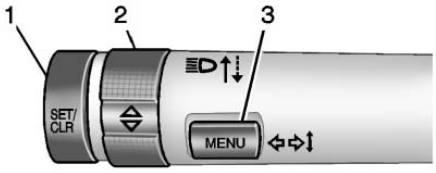

1. **SET/CLR:** Press to set, or press and hold to clear, the menu item displayed.
2. △ / ▽ **:** Use the thumbwheel to scroll through the items in each menu.
3. **MENU:** Press to display the DIC menus. This button is also used to return to or exit the last screen displayed on the DIC.

See *Driver Information Center (DIC) on page 5-21*.

Ultrasonic Parking Assist

If available, this system uses sensors on the rear bumper to assist with parking and avoiding objects while in R (Reverse). It operates at speeds less than 8 km/h (5 mph). URPA uses audible beeps to provide distance and system information.

Keep the sensors on the vehicle's rear bumper clean to ensure proper operation.

See *Ultrasonic Parking Assist on page 9-33*.

Downloaded from www.Manualslib.com manuals search engine

Storage Compartments

This vehicle has a cargo management system located in the rear of the vehicle.

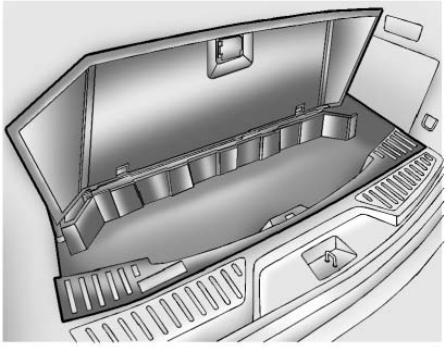

To remove the cargo management cover, see *Cargo Management System on page 4-4*.

Power Outlets

The accessory power outlets can be used to plug in electrical equipment, such as a cell phone or MP3 player.

The vehicle has three accessory power outlets: in front of the cupholders, at the rear of the center floor console and in the rear cargo area.

See *Power Outlets on page 5-6*.

Performance and Maintenance

Traction Control System (TCS)

The traction control system limits wheel spin. The system is on when the vehicle is started.

- To turn off traction control, press and release the TCS/StabiliTrak button. The TCS/StabiliTrak button has the OFF symbol and is located on the instrument panel. TC illuminates and the appropriate DIC message displays. See *Ride Control System Messages on page 5-28*.
- Press and release the TCS/StabiliTrak button again to turn traction control back on.

For more information, see *Traction Control System (TCS) on page 9-28*.

Downloaded from www.Manualslib.com manuals search engine

StabiliTrak® System

The StabiliTrak system assists with directional control of the vehicle in difficult driving conditions. The system is on when the vehicle is started.

- To turn off both Traction Control and StabiliTrak, press and hold the TCS/StabiliTrak button, until TC and OFF illuminate and the appropriate DIC message displays. See *Ride Control System Messages on page 5-28*. The TCS/StabiliTrak button has the OFF symbol and is located on the instrument panel,
- Press the TCS/StabiliTrak button again to turn on both systems.

For more information, see *StabiliTrak® System on page 9-29*.

Tire Pressure Monitor

This vehicle may have a Tire Pressure Monitor System (TPMS).

The low tire pressure warning light alerts to a significant loss in pressure of one of the vehicle's tires. If the warning light comes on, stop as soon as possible and inflate the tires to the recommended pressure shown on the Tire and Loading Information label. See *Vehicle Load Limits on page 9-9*. The warning light will remain on until the tire pressure is corrected.

The low tire pressure warning light may come on in cool weather when the vehicle is first started, and then turn off as the vehicle is driven. This may be an early indicator that the tire pressures are getting low and the tires need to be inflated to the proper pressure.

The TPMS does not replace normal monthly tire maintenance. Maintain the correct tire pressures.

See *Tire Pressure Monitor System on page 10-44*.

Tire Sealant and Compressor Kit

This vehicle may come with a spare tire and tire changing equipment or a tire sealant and compressor kit. The kit can be used to temporarily seal small punctures in the tread area of the tire. See *Tire Sealant and Compressor Kit on page 10-58*.

If the vehicle came with a spare tire and tire changing equipment, see *If a Tire Goes Flat on page 10-56*.

Downloaded from www.Manualslib.com manuals search engine

Engine Oil Life System

The engine oil life system calculates engine oil life based on vehicle use and displays the CHANGE ENGINE OIL SOON DIC message or Code 82 DIC message when it is time to change the engine oil and filter. The oil life system should be reset to 100% only following an oil change.

Resetting the Oil Life System

1. Turn the ignition to ON/RUN with the engine off.
2. Press the DIC MENU button on the turn signal lever to enter the Vehicle Information Menu. Use the thumbwheel to scroll through the menu items until you reach REMAINING OIL LIFE.
3. Press the SET/CLR button to reset the oil life at 100%.
4. Turn the ignition to LOCK/OFF.

See *Engine Oil Life System on page 10-9*.

Driving for Better Fuel Economy

Driving habits can affect fuel mileage. Here are some driving tips to get the best fuel economy possible.

- Avoid fast starts and accelerate smoothly.
- Brake gradually and avoid abrupt stops.
- Avoid idling the engine for long periods of time.
- When road and weather conditions are appropriate, use cruise control.
- Always follow posted speed limits or drive more slowly when conditions require.
- Keep vehicle tires properly inflated.
- Combine several trips into a single trip.
- Replace the vehicle's tires with the same TPC Spec number molded into the tire's sidewall near the size.
- Follow recommended scheduled maintenance.

Roadside Assistance Program

U.S.: 1-800-243-8872

TTY Users (U.S. Only): 1-888-889-2438

Canada: 1-800-268-6800

As the owner of a new Chevrolet, you are automatically enrolled in the Roadside Assistance program.

See *Roadside Assistance Program on page 13-5*.

Downloaded from www.Manualslib.com manuals search engine

Roadside Assistance and OnStar

If the vehicle has an active OnStar subscription, contact OnStar and the vehicle's current GPS location will be sent to an OnStar advisor to assess the situation, contact Roadside Assistance, and relay the exact location to send help.

OnStar®

If equipped, this vehicle has a comprehensive, in-vehicle system that can connect to a live Advisor for Emergency, Security, Navigation, Connection, and Diagnostic Services. See *OnStar Overview on page 14-1*.

Downloaded from www.Manualslib.com manuals search engine

✍ NOTES

Downloaded from www.Manualslib.com manuals search engine

Keys, Doors, and Windows

Keys and Locks
Keys 2-1
Remote Keyless Entry (RKE) System 2-2
Remote Keyless Entry (RKE) System Operation 2-3
Remote Vehicle Start 2-5
Door Locks 2-6
Power Door Locks 2-7
Automatic Door Locks 2-7
Safety Locks 2-7

Doors
Liftgate 2-8

Vehicle Security
Vehicle Security 2-9
Vehicle Alarm System 2-9
Immobilizer 2-10
Immobilizer Operation 2-10

Exterior Mirrors
Convex Mirrors 2-11
Manual Mirrors 2-11
Power Mirrors 2-12
Folding Mirrors 2-12
Heated Mirrors 2-12

Interior Mirrors
Manual Rearview Mirror 2-12
Automatic Dimming Rearview Mirror 2-13
Child-View Mirror 2-13

Windows
Windows 2-14
Power Windows 2-14
Sun Visors 2-16

Roof
Sunroof 2-16

Keys and Locks

Keys

⚠ WARNING

Leaving children in a vehicle with the ignition key is dangerous and children or others could be seriously injured or killed. They could operate the power windows or other controls or make the vehicle move. The windows will function with the keys in the ignition, and children or others could be caught in the path of a closing window. Do not leave children in a vehicle with the ignition key.

Downloaded from www.Manualslib.com manuals search engine

The key that is part of the Remote Keyless Entry (RKE) transmitter can be used for the ignition and all locks.

Press the key release button on the RKE transmitter to extend the key blade. Press the button and the key blade to retract the key.

If it becomes difficult to turn the key in the ignition, inspect the key blade for debris. Periodically clean with a brush or pick.

See your dealer if a new key is needed.

If locked out of the vehicle, see *Roadside Assistance Program on page 13-5*.

With an active OnStar subscription, an OnStar Advisor may remotely unlock the vehicle. See *OnStar Overview on page 14-1*.

Remote Keyless Entry (RKE) System

See *Radio Frequency Statement on page 13-15* for information regarding Part 15 of the Federal Communications Commission (FCC) rules and Industry Canada Standards RSS-GEN/210/220/310.

If there is a decrease in the RKE operating range:

- Check the distance. The transmitter may be too far from the vehicle.
- Check the location. Other vehicles or objects may be blocking the signal.
- Check the transmitter's battery. See “Battery Replacement” later in this section.

Downloaded from www.Manualslib.com manuals search engine

- If the transmitter is still not working correctly, see your dealer or a qualified technician for service.

Remote Keyless Entry (RKE) System Operation

The RKE transmitter may work up to 20 m (65 ft) away from the vehicle.

Other conditions can affect the performance of the transmitter. See *Remote Keyless Entry (RKE) System on page 2-2*.

RKE Transmitter with Remote Start Shown

The following may be available:

(Lock): Press to lock all doors.

The turn signal indicators may flash and/or the horn may sound to indicate locking. See “Locking Feedback” under *Vehicle Personalization on page 5-30*.

If the driver door is open when is pressed and Unlocked Door Anti Lock Out is enabled through vehicle personalization, all doors will lock and then the driver door will unlock. See “Unlocked Door Anti Lock Out” under *Vehicle Personalization on page 5-30*.

Pressing may also arm the theft-deterrent system. See *Vehicle Alarm System on page 2-9*.

(Unlock): Press to unlock the driver door or all doors. See “Door Unlock Options” under *Vehicle Personalization on page 5-30*.

The turn signal indicators may flash and/or the horn may sound to indicate unlocking. See “Unlock Feedback” under *Vehicle Personalization on page 5-30*.

Pressing will disarm the theft-deterrent system. See *Vehicle Alarm System on page 2-9*.

Downloaded from www.Manualslib.com manuals search engine

(Vehicle Locator/Panic Alarm): Press and hold briefly to initiate vehicle locator. The exterior lamps flash and the horn chirps three times.

Press and hold for at least three seconds to sound the panic alarm. The horn sounds and the turn signals flash for 30 seconds, or until is pressed again or the key is placed in the ignition and turned to ON/RUN.

(Remote Vehicle Start): For vehicles with this feature, press and then press and hold to start the engine from outside the vehicle using the RKE transmitter. See *Remote Vehicle Start on page 2-5* for additional information.

The buttons on the keys are disabled when there is a key in the ignition.

Programming Transmitters to the Vehicle

Only RKE transmitters programmed to this vehicle will work. If a transmitter is lost or stolen, a replacement can be purchased and programmed through your dealer. When the replacement transmitter is programmed to this vehicle, all remaining transmitters must also be reprogrammed. Any lost or stolen transmitters will no longer work once the new transmitter is programmed.

Battery Replacement

The battery is not rechargeable. To replace the battery:

1. Extend the key blade and open the battery cover on the back of the transmitter by prying with a finger.
2. Remove the used battery by pushing on the battery and sliding it toward the key blade.

Downloaded from www.Manualslib.com manuals search engine

3. Insert the new battery, positive side facing up. Push the battery down until it is held in place. Replace with a CR2032 or equivalent battery.
4. Snap the battery cover back on to the transmitter.

Remote Vehicle Start

The vehicle may have this feature that allows you to start the engine from outside the vehicle.

(Remote Vehicle Start): This button will be on the RKE transmitter if the vehicle has remote start.

The climate control system will use the previous settings during a remote start. The rear defog may come on during remote start based on cold ambient conditions. The rear fog indicator light does not come on during remote start. If the vehicle has heated seats, they may come on during a remote start. See *Heated Front Seats on page 3-6*.

Laws in some local communities may restrict the use of remote starters. For example, some laws require a person using remote start to have the vehicle in view. Check local regulations for any requirements.

Other conditions can affect the performance of the transmitter. See *Remote Keyless Entry (RKE) System on page 2-2*.

Starting the Vehicle

To start the engine using the remote start feature:

1. Aim the RKE transmitter at the vehicle.
2. Press and release .
3. Immediately after completing Step 2, press and hold for at least two seconds or until the turn signal lamps flash. The turn signal lamps flashing confirms the request to remote start the vehicle has been received.

When the engine starts, the parking lamps will turn on and remain on as long as the engine is running. The doors will be locked and the climate control system may come on.

The engine will continue to run for 10 minutes. Repeat the steps for a 10-minute time extension. Remote start can be extended only once.

Start the vehicle before driving.

Extending Engine Run Time

For a 10-minute extension, repeat Steps 1–3 while the engine is still running. The remote start can be extended once.

When the remote start is extended, the second 10 minutes will start immediately.

For example, if the engine has been running for five minutes, and 10 minutes are added, the engine will run for a total of 15 minutes.

Downloaded from www.Manualslib.com manuals search engine

A maximum of two remote starts, or a single start with an extension, is allowed between ignition cycles.

The vehicle's ignition must be turned on and then back off before the remote start procedure can be used again.

Canceling a Remote Start

To cancel a remote start, do one of the following:

- Aim the RKE transmitter at the vehicle and press and hold until the parking lamps turn off.
- Turn on the hazard warning flashers.
- Turn the vehicle on and then off.

Conditions in Which Remote Start Will Not Work

The remote vehicle start feature will not operate if:

- The key is in the ignition (key access) or if the key is in the vehicle (keyless access).
- The hood is not closed.
- The hazard warning flashers are on.
- The malfunction indicator lamp is on.
- The engine coolant temperature is too high.
- The oil pressure is low.
- Two remote vehicle starts, or a single remote start with an extension, have already been used.
- The vehicle is not in P (Park).

Door Locks

⚠ WARNING

Unlocked doors can be dangerous.

- Passengers, especially children, can easily open the doors and fall out of a moving vehicle. The chance of being thrown out of the vehicle in a

(Continued)

WARNING (Continued)

crash is increased if the doors are not locked. So, all passengers should wear safety belts properly and the doors should be locked whenever the vehicle is driven.

- Young children who get into unlocked vehicles may be unable to get out. A child can be overcome by extreme heat and can suffer permanent injuries or even death from heat stroke. Always lock the vehicle whenever leaving it.
- Outsiders can easily enter through an unlocked door when slowing or stopping the vehicle. Lock the doors to help prevent this from happening.

Downloaded from www.Manualslib.com manuals search engine

To lock or unlock a door from outside the vehicle, use the Remote Keyless Entry (RKE) transmitter. From inside the vehicle, use the power door lock switch.

The doors can also be unlocked from the inside by pulling the door handle. Pulling the door handle again unlatches the door.

Power Door Locks

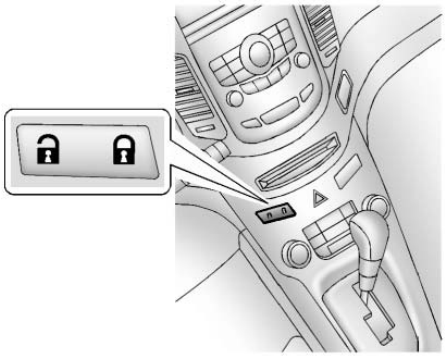

The power door lock switch is on the instrument panel.

(Lock): Press to lock the doors.

(Unlock): Press to unlock the doors.

Automatic Door Locks

Automatic Door Lock

The doors are programmed to automatically lock when the shift lever is moved out of P (Park).

The automatic door lock feature cannot be disabled.

Automatic Door Unlock

The doors will automatically unlock when the shift lever is moved into P (Park).

See *Vehicle Personalization on page 5-30*.

Safety Locks

The rear door safety locks prevent passengers from opening the rear doors from inside the vehicle.

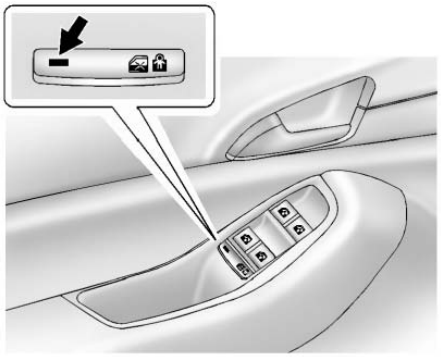

Press to activate the safety locks on the rear doors. The indicator light comes on when activated.

Downloaded from www.Manualslib.com manuals search engine

The rear door power windows are also disabled.

Press again to deactivate the lockout switch.

If a rear door handle is pulled when the safety lock is deactivated, that door will remain locked and the indicator light may flash. Release the handle, then press the safety lock twice to deactivate the safety locks.

Doors

Liftgate

WARNING

Exhaust gases can enter the vehicle if it is driven with the liftgate, trunk/hatch open, or with any objects that pass through the seal between the body and the trunk/hatch or liftgate. Engine exhaust contains carbon monoxide (CO) which cannot be seen or smelled. It can cause unconsciousness and even death.

If the vehicle must be driven with the liftgate, or trunk/hatch open:

- Close all of the windows.
- Fully open the air outlets on or under the instrument panel.

(Continued)

WARNING (Continued)

- Adjust the Climate Control system to a setting that brings in only outside air and set the fan speed to the highest setting. See Climate Control System in the Index.

For more information about carbon monoxide, see *Engine Exhaust on page 9-20*.

Notice: **To avoid damage to the liftgate or liftgate glass, make sure the area above and behind the liftgate is clear before opening it.**

Unlock the vehicle before opening the liftgate.

Downloaded from www.Manualslib.com manuals search engine

Press the touch pad located in the handle of the liftgate, above the license plate, and lift up to open.

Do not press the touch pad while closing the liftgate. This will cause the liftgate to be unlatched.

Always close the liftgate before driving.

Vehicle Security

This vehicle has theft-deterrent features; however, they do not make the vehicle impossible to steal.

Vehicle Alarm System

This vehicle has a anti-theft alarm system.

The LED light, instrument panel near the windshield, indicates the status of the system.

Arming the System

1. Close all doors, trunk, and liftgate.
2. Lock the vehicle using the transmitter or the power door lock button with the door open. The LED on the instrument panel should come on and stay on for about 30 seconds.
3. After 30 seconds, or if the 🔒 button on the transmitter is pressed again, the alarm system will arm, and the LED will begin to slowly flash indicating the alarm is operating.

If a door, the hood, or liftgate is opened without first unlocking with the transmitter, the turn signals will flash and the horn will sound for about 30 seconds. The alarm system will then re-arm to monitor for the next unauthorized event.

The theft-deterrent alarm system will not activate if the doors are locked with the key.

Disarming the System

To disarm the system, either unlock the doors using the transmitter, or start the vehicle.

To avoid setting off the alarm by accident:

- Lock the vehicle with the transmitter after all occupants have left the vehicle and all doors are closed.

Downloaded from www.Manualslib.com manuals search engine

- Always unlock a door with the transmitter. Unlocking the driver door with the mechanical backup key will not disarm the alarm.

If you set off the alarm by accident, turn off the alarm by pressing on the transmitter, or start the vehicle with a recognized transmitter in the vehicle. the alarm will not stop if you unlock the driver door with the key.

How to Detect a Tamper Condition

If 🔓 is pressed and the horn chirps three times, an attempted break-in has occurred while the system was armed.

If the alarm has been activated, the THEFT ATTEMPTED message will appear on the DIC.

See *Key and Lock Messages on page 5-27*.

Immobilizer

See *Radio Frequency Statement on page 13-15* for information regarding Part 15 of the Federal Communications Commission (FCC) rules and Industry Canada Standards RSS-GEN/210/220/310.

Immobilizer Operation

This vehicle has a passive theft-deterrent system.

The system does not have to be manually armed or disarmed.

The vehicle is automatically immobilized when the key is removed from the ignition.

The system is automatically disarmed when the vehicle is started with the correct key. The key uses a transponder that matches an immobilizer control unit in the vehicle and automatically disarms the system. Only an authorized key starts the vehicle. The vehicle may not start if the key is damaged.

The security light in the instrument cluster comes on if there is a problem with arming or disarming the theft-deterrent system.

When trying to start the vehicle, the security light comes on briefly when the ignition is turned on.

If the engine does not start and the security light stays on, there is a problem with the system. Turn the ignition off and try again.

Downloaded from www.Manualslib.com manuals search engine

If the engine still does not start, and the key appears to be undamaged or the light continues to stay on, try another ignition key. If the engine does not start with the other key, the vehicle needs service. If the vehicle does start, the first key may be damaged. See your dealer who can service the theft-deterrent system and have a new key made.

Do not leave the key or device that disarms or deactivates the theft-deterrent system in the vehicle.

Exterior Mirrors

Convex Mirrors

⚠ WARNING

A convex mirror can make things, like other vehicles, look farther away than they really are. If you cut too sharply into the right lane, you could hit a vehicle on the right. Check the inside mirror or glance over your shoulder before changing lanes.

The convex shaped mirror reduces blind spots. The shape of the mirror makes objects appear smaller, which will affect the ability to estimate distances.

Manual Mirrors

Some vehicles have outside mirrors that can be manually adjusted.

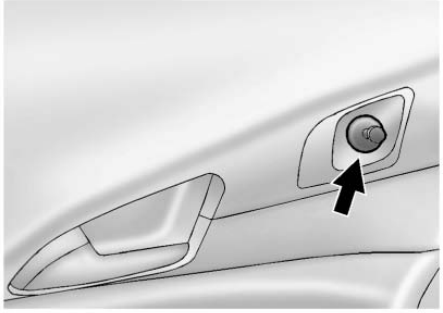

Controls for the outside manual mirrors are located next to each mirror.

Downloaded from www.Manualslib.com manuals search engine

Power Mirrors

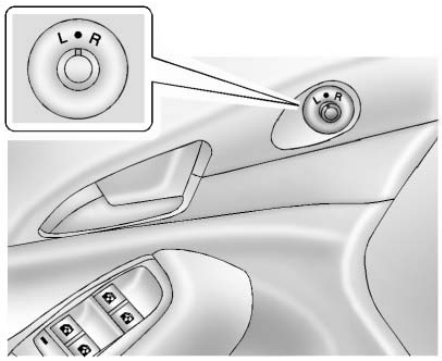

Vehicles with power mirrors have controls on the driver door.

To adjust the mirrors:

1. Turn the selector switch to L (Left) or R (Right) to choose the driver or passenger mirror.
2. Move the control to adjust the mirror.
3. Turn the selector switch to the ● position to deselect the mirror.

Folding Mirrors

Push the mirror toward the vehicle. Pull the mirror out to return to its original position.

Heated Mirrors

The vehicle may have heated mirrors.

(Rear Window Defogger): Press to heat the outside rearview mirrors. See “Rear Window Defogger” under *Climate Control Systems on page 8-1* or *Automatic Climate Control System on page 8-3* for more information.

Interior Mirrors

Manual Rearview Mirror

Hold the inside rearview mirror in the center to move it for a clearer view of behind your vehicle. Adjust the inside rearview mirror by moving it up and down or side to side. Adjust the mirror to avoid glare from the headlamps behind you. Push the tab forward for daytime use and pull it for nighttime use.

Cleaning the Mirror

Do not spray glass cleaner directly on the mirror. Use a soft towel dampened with water.

Downloaded from www.Manualslib.com manuals search engine

Automatic Dimming Rearview Mirror

The vehicle may have an automatic dimming inside rearview mirror. Automatic dimming reduces the glare from the headlamps of the vehicle behind you. The dimming feature and indicator light come on each time the vehicle is started.

Vehicles with OnStar have three control buttons at the bottom of the mirror. See your dealer for more information about OnStar and how to subscribe to it. See *OnStar Overview on page 14-1*.

Cleaning the Mirror

Do not spray glass cleaner directly on the mirror. Use a soft towel dampened with water.

Child-View Mirror

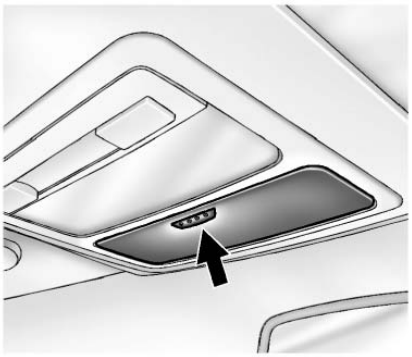

Push up and release, the mirror will open automatically.

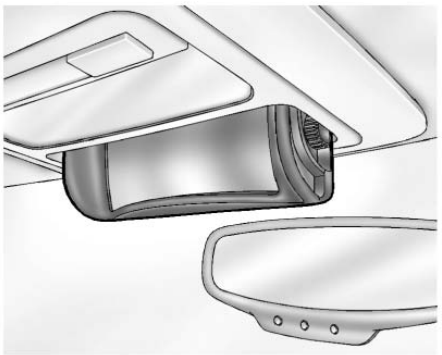

Push the mirror back up when not in use.

Cleaning the Mirror

Do not spray glass cleaner directly on the mirror. Use a soft towel dampened with water.

Downloaded from www.Manualslib.com manuals search engine

Windows

⚠ WARNING

Never leave a child, a helpless adult, or a pet alone in a vehicle, especially with the windows closed in warm or hot weather. They can be overcome by the extreme heat and suffer permanent injuries or even death from heat stroke.

The vehicle aerodynamics are designed to improve fuel economy performance. This may result in a pulsing sound when either rear window is down and the front windows are up. To reduce the sound, open either a front window or the sunroof (if equipped).

Power Windows

⚠ WARNING

Children could be seriously injured or killed if caught in the path of a closing window. Never leave keys in a vehicle with children. When there are children in the rear seat, use the window lockout button to prevent operation of the windows. See *Keys on page 2-1*.

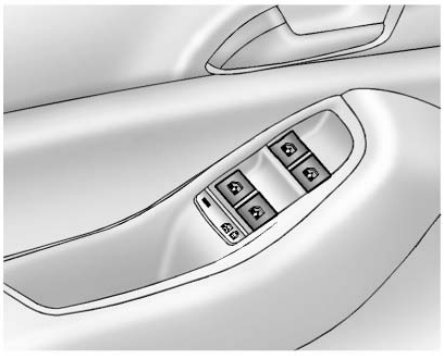

On vehicles with power windows, the switches are on the doors.

Push the switch down to open the window. Pull the front of the switch up to close it.

The switches work when the ignition is in ON/RUN, ACC/ACCESSORY, or in Retained Accessory Power (RAP). See *Retained Accessory Power (RAP) on page 9-18*.

Express Window Operation

Your vehicle may have windows with an express-up or down feature. This feature allows the window to be

Downloaded from www.Manualslib.com manuals search engine

lowered or raised without holding the switch. Passenger side and rear windows only have express-down. Pull a window switch up or push it down all the way, release it, and the window goes down or up automatically. Stop the window by pushing or pulling the switch.

Obstacle Detection Feature

If equipped with express-up, and an object is in the path of the window when closing, the window will stop at the obstruction and auto-reverse to a preset factory position. Weather conditions such as severe cold and/or ice may also cause the window to auto-reverse. The window will return to normal operation once the obstruction or condition is removed.

If conditions prevent the window from closing and the window continues to auto-reverse, it is possible to close the window with the ignition in ON/RUN by holding the window switch in the partially or fully pulled up position. Release of the switch from the partially pulled up position will cause the window to stop. Release of the switch from the fully pulled up position will activate the express-up and related obstacle detection features.

Programming the Power Windows

If the battery on the vehicle has been recharged or disconnected, or is not working, you will need to reprogram each front power window for the express-up feature to work. Before reprogramming, replace or recharge the vehicle's battery.

To program each front window:

1. With the ignition in ACC/ACCESSORY or ON/RUN, or when Retained Accessory Power (RAP) is active, close all doors.
2. Press and hold the power window switch until the window is fully open.
3. Pull the power window switch up until the window is fully closed.
4. Continue holding the switch up for approximately two seconds after the window is completely closed.

The window is now reprogrammed. Repeat the process for the other windows.

Window Lockout

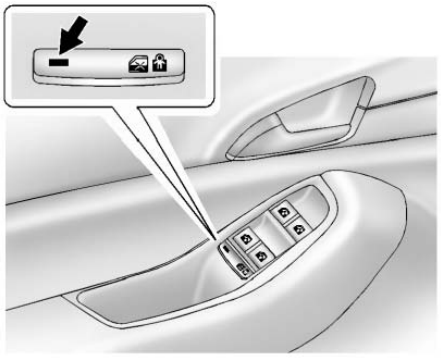

The rear window lockout switch is on the driver door. This feature prevents the rear passenger windows from operating, except from the driver position.

Downloaded from www.Manualslib.com manuals search engine

Press to activate the rear window lockout switch. The indicator light comes on when activated.

The rear door locks are also disabled.

Press again to deactivate the lockout switch.

If the indicator light flashes, the feature may not be working properly.

Overload Feature

If the windows are operated repeatedly in short intervals, the window operation is disabled for a short time.

Sun Visors

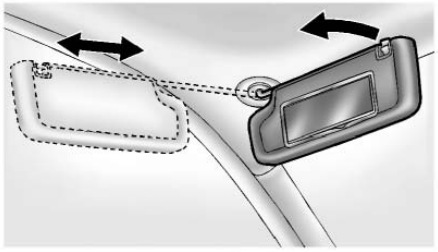

Pull the sun visor down to block glare. Detach the sun visor from the center mount to pivot to the side window, or to extend along the rod, if available.

Lighted Visor Vanity Mirror

Pull the visor down and lift the cover to access the mirror. A light comes on when the cover is lifted and goes out when it is closed.

Roof

Sunroof

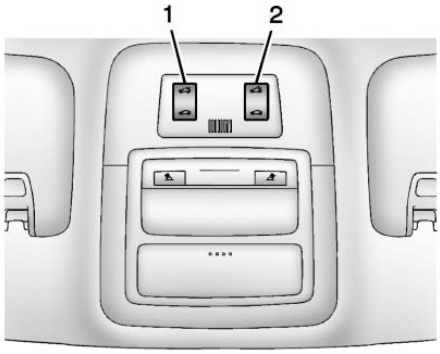

On vehicles with a sunroof, the switches are on the overhead console.

The sunroof only operates when the ignition is in ON/RUN or ACC/ACCESSORY or in Retained Accessory Power (RAP). See *Retained Accessory Power (RAP) on page 9-18*.

Downloaded from www.Manualslib.com manuals search engine

To open or close the sunroof, press the open or close sunroof switch (1) to the first detent position.

To express open or close the sunroof with the safety function enabled, press the open or close sunroof switch (1) to the second detent position and release. To stop the movement, press the switch again.

To automatically tilt or close the sunroof, press the tilt open or close sunroof switch (2).

If an object is in the path of the sunroof while it is closing, the anti-pinch feature will detect the object and stop the sunroof.

The sunroof glass panel cannot be opened or closed if the vehicle has an electrical failure.

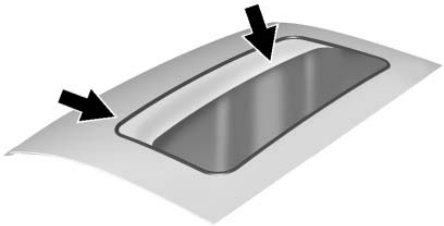

Dirt and debris may collect on the sunroof seal or in the track. This could cause issues with sunroof operation and noise. It could also plug the water drainage system. Periodically open the sunroof and remove any obstacles or loose debris. Wipe the sunroof seal and roof sealing area using a clean cloth, mild soap, and water. Do not remove grease from the sunroof.

Sunshade

The sunshade is manually operated. Close or open the sunshade by sliding. When the sunroof is opened, the sunshade is always open.

Safety Function

If the sunroof has any resistance during automatic closing, it will immediately stop and reverse.

To override the safety function, press and hold the close sunroof switch. The sunroof closes without the safety function. To stop the movement, release the switch.

Downloaded from www.Manualslib.com manuals search engine

✍ NOTES

Downloaded from www.Manualslib.com manuals search engine

Seats and Restraints

Head Restraints
Head Restraints 3-2

Front Seats
Seat Adjustment 3-3
Power Seat Adjustment 3-4
Reclining Seatbacks 3-4
Front Seat Armrest 3-6
Heated Front Seats 3-6
Folding Seatback 3-7

Rear Seats
Second Row Seats 3-8
Third Row Seats 3-12

Safety Belts
Safety Belts 3-15
How to Wear Safety Belts Properly 3-16
Lap-Shoulder Belt 3-17
Safety Belt Use During Pregnancy 3-22
Safety Belt Extender 3-22
Safety System Check 3-23
Safety Belt Care 3-23
Replacing Safety Belt System Parts after a Crash 3-23

Airbag System
Airbag System 3-24
Where Are the Airbags? 3-26
When Should an Airbag Inflate? 3-27
What Makes an Airbag Inflate? 3-28
How Does an Airbag Restrain? 3-28
What Will You See after an Airbag Inflates? 3-29
Servicing the Airbag-Equipped Vehicle 3-30
Adding Equipment to the Airbag-Equipped Vehicle . . . 3-30
Airbag System Check 3-31
Replacing Airbag System Parts after a Crash 3-31

Child Restraints
Older Children 3-32
Infants and Young Children 3-34
Child Restraint Systems 3-36
Where to Put the Restraint . . . 3-38
Lower Anchors and Tethers for Children (LATCH System) 3-39
Replacing LATCH System Parts After a Crash 3-44
Securing Child Restraints (Rear Seat) 3-44
Securing Child Restraints (Front Passenger Seat) 3-46

Downloaded from www.Manualslib.com manuals search engine

Head Restraints

⚠ WARNING

With head restraints that are not installed and adjusted properly, there is a greater chance that occupants will suffer a neck/spinal injury in a crash. Do not drive until the head restraints for all occupants are installed and adjusted properly.

Front Seats

The vehicle's front seats have adjustable head restraints in the outboard seating positions.

Adjust the head restraint so that the top of the restraint is at the same height as the top of the occupant's head. This position reduces the chance of a neck injury in a crash.

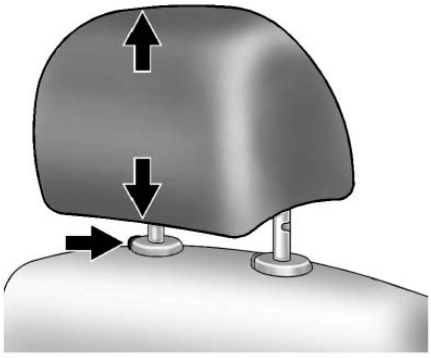

The height of the head restraint can be adjusted. Pull the head restraint up to raise it. Try to move the head restraint to make sure that it is locked in place.

To lower the head restraint, press the button located on the top of the seatback, and push the head restraint down. Try to move the head restraint after the button is released to make sure that it is locked in place.

The front seat outboard head restraints are not designed to be removed.

Downloaded from www.Manualslib.com manuals search engine

Rear Seats

The vehicle's second row seats have adjustable head restraints in the outboard seating positions. The vehicle's third row seats have head restraints in the outboard seating positions that cannot be adjusted.

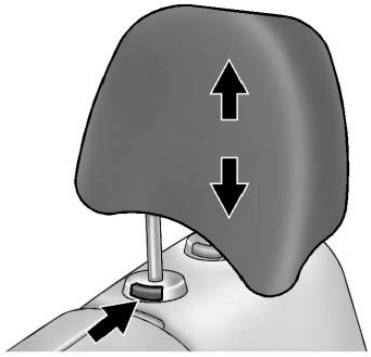

Second Row Seat Head Restraint

The height of the second row head restraints can be adjusted. Pull the head restraint up to raise it. Try to move the head restraint to make sure that it is locked in place.

To lower the head restraint, press the button located on the top of the seatback, and push the head restraint down. Try to move the head restraint after the button is released to make sure that it is locked in place.

The vehicle's second row seat is equipped with an adjustable headrest in the center seating position that operates the same way as the rear outboard head restraints.

The rear outboard head restraints and rear center headrest are not designed to be removed.

Front Seats

Seat Adjustment

Seat Position

⚠ WARNING

You can lose control of the vehicle if you try to adjust a driver seat while the vehicle is moving. Adjust the driver seat only when the vehicle is not moving.

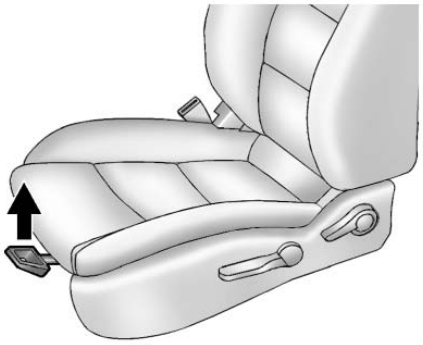

Downloaded from www.Manualslib.com manuals search engine

To adjust a manual seat:

1. Pull the handle at the front of the seat.
2. Slide the seat to the desired position and release the handle.
3. Try to move the seat back and forth to be sure it is locked in place.

Height Adjustment

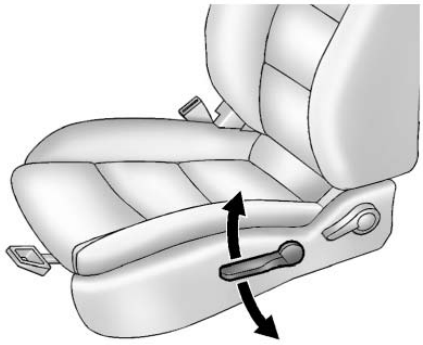

If available, move the lever up or down to manually raise or lower the seat.

Power Seat Adjustment

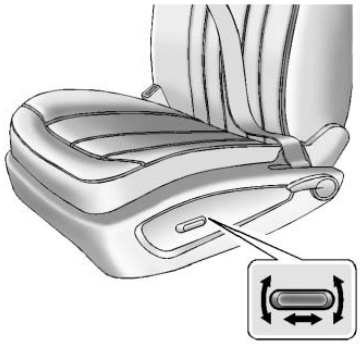

To adjust the power driver seat, if available:

- Move the seat forward or rearward by sliding the control forward or rearward.
- Raise or lower the front part of the seat cushion by moving the front of the control up or down.
- Raise or lower the entire seat by moving the rear of the control up or down.

To adjust the seatback, see *Reclining Seatbacks on page 3-4*.

Reclining Seatbacks

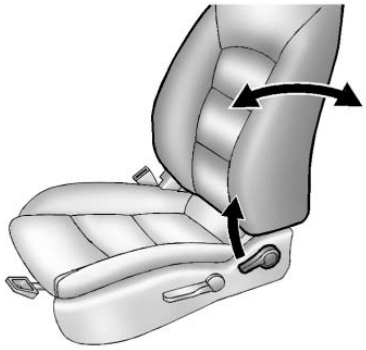

To recline the seatback:

1. Lift the lever.
2. Move the seatback to the desired position, then release the lever to lock the seatback in place.

   Do not lean against the seatback while adjusting it.

Downloaded from www.Manualslib.com manuals search engine

3. Push and pull on the seatback to make sure it is locked.

⚠ WARNING

If either seatback is not locked, it could move forward in a sudden stop or crash. That could cause injury to the person sitting there. Always push and pull on the seatbacks to be sure they are locked.

To return the seatback to an upright position:

1. Lift the lever fully without applying pressure to the seatback, and the seatback returns to the upright position.
2. Push and pull on the seatback to make sure it is locked.

⚠ WARNING

Sitting in a reclined position when the vehicle is in motion can be dangerous. Even when buckled up, the safety belts cannot do their job.

The shoulder belt will not be against your body. Instead, it will be in front of you. In a crash, you could go into it, receiving neck or other injuries.

The lap belt could go up over your abdomen. The belt forces would be there, not at your pelvic bones. This could cause serious internal injuries.

For proper protection when the vehicle is in motion, have the seatback upright. Then sit well back in the seat and wear the safety belt properly.

Do not have a seatback reclined if the vehicle is moving.

Downloaded from www.Manualslib.com manuals search engine

Front Seat Armrest

There may be an armrest on the inboard side of the driver seat. Pull the armrest down to lower it from the upright position. From the fully lowered position, the armrest can be adjusted upward in increments. Lift up on the armrest to raise it to the desired preset position.

Heated Front Seats

⚠ WARNING

If you cannot feel temperature change or pain to the skin, the seat heater may cause burns. To reduce the risk of burns, people with such a condition should use care when using the seat heater, especially for long periods of time. Do not place anything on the seat that insulates against heat, such as a blanket, cushion, cover, or similar item. This may cause the seat heater to overheat. An overheated seat heater may cause a burn or may damage the seat.

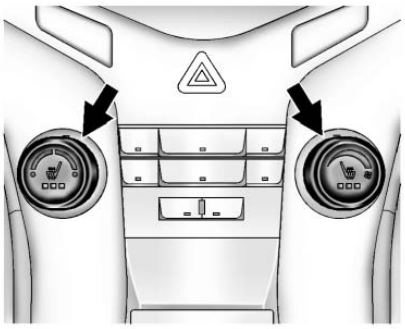

Automatic Climate Control System Buttons Shown

If available, the buttons are on the instrument panel, near the center. To operate, the engine must be running.

Press ⚡ or ⚡ to heat the driver or passenger seat.

Press the button once for the highest setting. With each press of the button, the heated seat will change to the next lower setting, and then the off setting. Three lights indicate the highest setting, and one light indicates the lowest.

Downloaded from www.Manualslib.com manuals search engine

The passenger seat may take longer to heat up.

Remote Start Heated Seats

When it is cold outside, the heated seats can be programmed to turn on automatically during a remote vehicle start. The heated seats will be canceled when the ignition is turned on. Press the heated seat button to use the heated seats after the vehicle is started.

The heated seat button lights do not turn on during a remote start.

The temperature of an unoccupied seat may be reduced. This is normal.

The heated seats will not turn on during a remote start unless the heated seat feature is enabled in the vehicle personalization menu. See *Remote Vehicle Start on page 2-5* and *Vehicle Personalization on page 5-30*.

Folding Seatback

The front passenger seatback folds flat.

⚠ WARNING

If you fold the seatback forward to carry longer objects, such as skis, be sure any such cargo is not near an airbag. In a crash, an inflating airbag might force that object toward a person. This could cause severe injury or even death. Secure objects away from the area in which an airbag would inflate. For more information, see *Where Are the Airbags? on page 3-26* and *Vehicle Load Limits on page 9-9*.

⚠ WARNING

Things you put on this seatback can strike and injure people in a sudden stop or turn, or in a crash. Remove or secure all items before driving.

To fold the seatback:

1. Lower the head restraint all the way. See *Head Restraints on page 3-2*.
2. Move the seat as far back as possible. See *Seat Adjustment on page 3-3*.

Downloaded from www.Manualslib.com manuals search engine

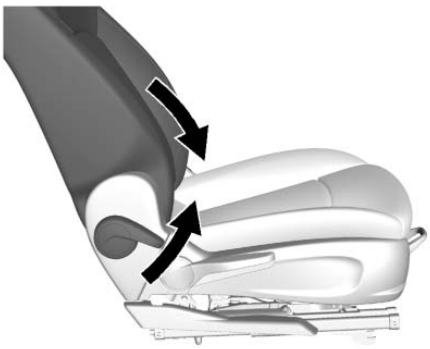

3. Lift the lever fully and fold the seatback forward.
4. Continue lowering the seatback until it is completely folded.

   When the seatback is completely folded, it will lock in place.

To raise the seatback:

1. Lift the lever fully to unlock the seatback. Then, raise the seatback and push it rearward until it re-engages.
2. Push and pull on the seatback to make sure it is locked in place.

Rear Seats

Second Row Seats

Adjusting the Seatbacks

⚠ WARNING

If either seatback is not locked, it could move forward in a sudden stop or crash. That could cause injury to the person sitting there. Always push and pull on the seatbacks to be sure they are locked.

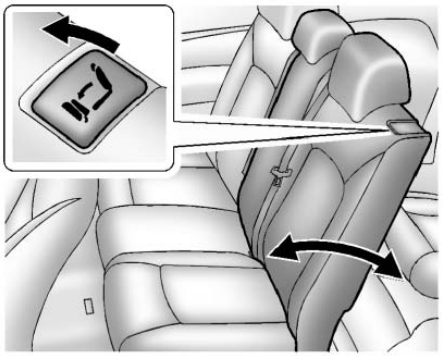

To adjust the seatback:

1. Lift and hold the lever on the top of the seatback.

   Do not lean against the seatback while adjusting it.
2. Tilt the seatback forward or rearward to the desired position, then release the lever.
3. Push and pull on the seatback to make sure it is locked in place.

Downloaded from www.Manualslib.com manuals search engine

Folding the Seatbacks

Notice: **Folding a rear seat with the safety belts still fastened may cause damage to the seat or the safety belts. Always unbuckle the safety belts and return them to their normal stowed position before folding a rear seat.**

To fold a seatback:

1. Lower the rear seat head restraints all the way. See *Head Restraints on page 3-2*.

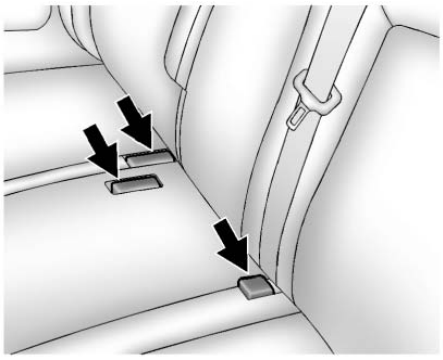

2. Place the safety belt buckles in the seat cushion pockets.

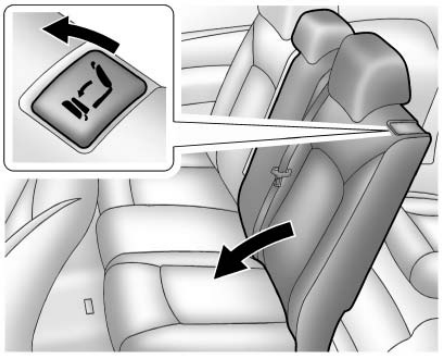

3. Lift the lever on the top of the seatback and fold the seatback forward. The seat will release from the vehicle floor and lift up automatically.

⚠ WARNING

A seat that is not locked into place properly can move around in a collision or sudden stop. People in the vehicle could be injured. Be sure to lock the seat into place properly when installing it.

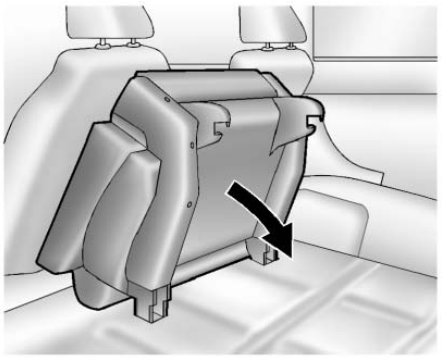

4. Push down on the seat until it latches to the floor. See “Tumbling the Second Row Seats” later in this section.

Keep the seatback in the upright, locked position when not in use.

Downloaded from www.Manualslib.com manuals search engine

Unfolding the Seatbacks

To return a seatback to the upright position:

⚠ WARNING

If either seatback is not locked, it could move forward in a sudden stop or crash. That could cause injury to the person sitting there. Always push and pull on the seatbacks to be sure they are locked.

1. Raise the seatback to the upright position.
2. Push and pull on the seatback to make sure it is locked in place.

⚠ WARNING

A safety belt that is improperly routed, not properly attached, or twisted will not provide the protection needed in a crash. The

(Continued)

WARNING (Continued)

person wearing the belt could be seriously injured. After raising the rear seatback, always check to be sure that the safety belts are properly routed and attached, and are not twisted.

3. Remove the safety belt buckles from the seat cushion pockets.

   Make sure the safety belts are not twisted or caught between the seat cushion and the seatback.

Tumbling the Second Row Seats

The second row seats can be folded and tumbled to allow access to the third row seats.

To fold and tumble the seats:

1. Lower the rear seat head restraints all the way. See *Head Restraints on page 3-2*.

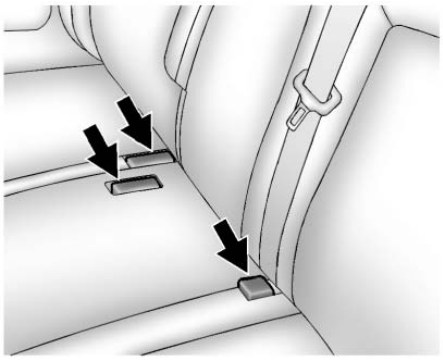

2. Place the safety belt buckles in the seat cushion pockets.

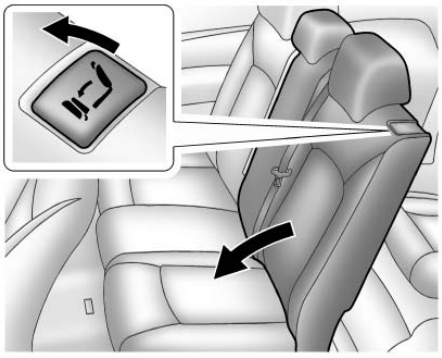

Downloaded from www.Manualslib.com manuals search engine

3. Lift the lever on the top of the seatback and fold the seatback forward.

   The seat will release from the vehicle floor and lift up automatically.

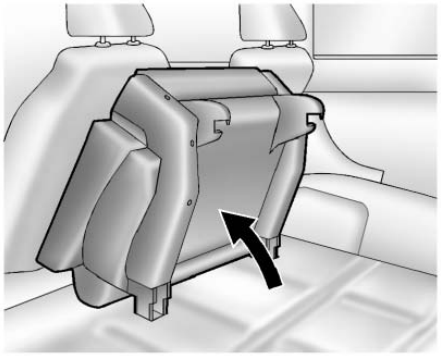

4. If the seat does not lift completely, manually raise it to the fully tumbled position.

Returning the Seats to the Sitting Position

⚠ WARNING

A seat that is not locked into place properly can move around in a collision or sudden stop. People in the vehicle could be injured. Be sure to lock the seat into place properly when installing it.

To return the seats to the sitting position:

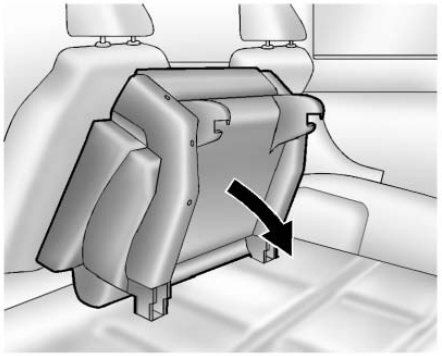

1. Push down on the seat until it latches to the floor.
2. Raise the seatback to the upright position.

Downloaded from www.Manualslib.com manuals search engine

⚠ WARNING

If either seatback is not locked, it could move forward in a sudden stop or crash. That could cause injury to the person sitting there. Always push and pull on the seatbacks to be sure they are locked.

3. Push and pull on the seatback to make sure it is locked in place.

⚠ WARNING

A safety belt that is improperly routed, not properly attached, or twisted will not provide the protection needed in a crash. The person wearing the belt could be seriously injured. After raising the rear seatback, always check to be sure that the safety belts are properly routed and attached, and are not twisted.

4. Remove the safety belt buckles from the seat cushion pockets.

   Make sure the safety belts are not twisted or caught between the seat cushion and the seatback.

Third Row Seats

Stowing the Seats

⚠ WARNING

Using the third row seating position while the second row is folded, or folded and tumbled, could cause injury in a sudden stop or crash. Be sure to return the seat to the passenger seating position. Push and pull on the seat to make sure it is locked into place.

⚠ WARNING

The hinge area of the seats must remain clear when stowing or unstowing the seats. Keep hands away from the seat hinges to avoid injury.

Notice: **Folding a rear seat with the safety belts still fastened may cause damage to the seat or the safety belts. Always unbuckle the safety belts and return them to their normal stowed position before folding a rear seat.**

To stow the seats:

1. Unbuckle the safety belts in the third row seats.
2. Open the liftgate.

Downloaded from www.Manualslib.com manuals search engine

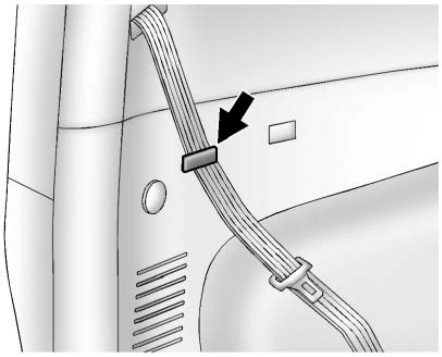

3. Insert the outboard safety belts into the guides on the side trim near the liftgate.

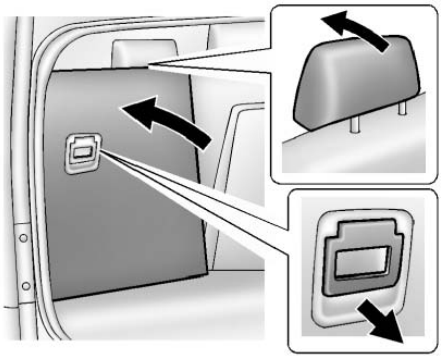

4. From the rear of the vehicle, pull the release handle on the back of the third row seatback. The head restraint will release and fold forward automatically.
5. Grasping the handle, fold the seatback forward and release it.

Returning the Seats to the Sitting Position

⚠ WARNING

The hinge area of the seats must remain clear when stowing or unstowing the seats. Keep hands away from the seat hinges to avoid injury.

Downloaded from www.Manualslib.com manuals search engine

To return the seats to the sitting position:

1. Open the liftgate.

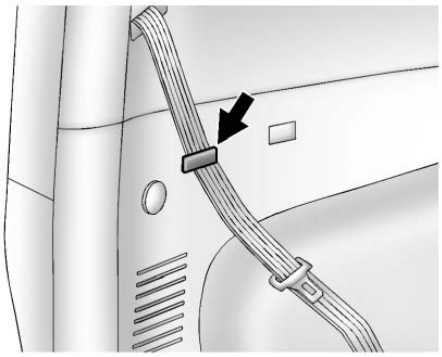

2. Make sure the outboard safety belts are secured in the guides on the side trim near the liftgate.

⚠ WARNING

A seat that is not locked into place properly can move around in a collision or sudden stop. People in the vehicle could be

(Continued)

WARNING (Continued)

injured. Be sure to lock the seat into place properly when installing it.

3. From the rear of the vehicle, grasp the handle on the back of the seatback and lift the seat up and to the rear until it locks into place.

⚠ WARNING

With head restraints that are not installed and adjusted properly, there is a greater chance that occupants will suffer a neck/spinal injury in a crash. Do not drive until the head restraints for all occupants are installed and adjusted properly.

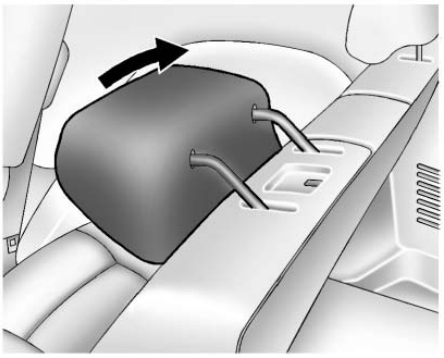

4. Return the head restraint to the upright position by pulling the head restraint up and to the rear until it locks into place.

   Push and pull on the head restraint to make sure that it is locked.

⚠ WARNING

A safety belt that is improperly routed, not properly attached, or twisted will not provide the protection needed in a crash. The

(Continued)

Downloaded from www.Manualslib.com manuals search engine

WARNING (Continued)

person wearing the belt could be seriously injured. After raising the rear seatback, always check to be sure that the safety belts are properly routed and attached, and are not twisted.

5. Remove the safety belts from the guides on the trim near the liftgate. Make sure the safety belts are not twisted or caught between the seat cushion and the seatback.

Safety Belts

This section of the manual describes how to use safety belts properly. It also describes some things not to do with safety belts.

⚠ WARNING

Do not let anyone ride where a safety belt cannot be worn properly. In a crash, if you or your passenger(s) are not wearing safety belts, injuries can be much worse than if you are wearing safety belts. You can be seriously injured or killed by hitting things inside the vehicle harder or by being ejected from the vehicle. In addition, anyone who is not buckled up can strike other passengers in the vehicle.

It is extremely dangerous to ride in a cargo area, inside or outside of a vehicle. In a collision, passengers riding in these areas

(Continued)

WARNING (Continued)

are more likely to be seriously injured or killed. Do not allow passengers to ride in any area of the vehicle that is not equipped with seats and safety belts.

Always wear a safety belt, and check that all passenger(s) are restrained properly too.

This vehicle has indicators as a reminder to buckle the safety belts. See *Safety Belt Reminders on page 5-10*.

Downloaded from www.Manualslib.com manuals search engine

Why Safety Belts Work

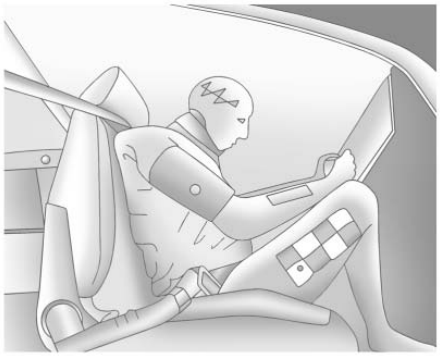

When riding in a vehicle, you travel as fast as the vehicle does. If the vehicle stops suddenly, you keep going until something stops you. It could be the windshield, the instrument panel, or the safety belts!

When you wear a safety belt, you and the vehicle slow down together. There is more time to stop because you stop over a longer distance and, when worn properly, your strongest bones take the forces from the safety belts. That is why wearing safety belts makes such good sense.

Questions and Answers About Safety Belts

Q: Will I be trapped in the vehicle after a crash if I am wearing a safety belt?

A: You *could* be — whether you are wearing a safety belt or not. Your chance of being conscious during and after a crash, so you *can* unbuckle and get out, is *much* greater if you are belted.

Q: If my vehicle has airbags, why should I have to wear safety belts?

A: Airbags are supplemental systems only; so they work *with* safety belts — not instead of them. Whether or not an airbag is provided, all occupants still have to buckle up to get the most protection.

Also, in nearly all states and in all Canadian provinces, the law requires wearing safety belts.

How to Wear Safety Belts Properly

This section is only for people of adult size.

There are special things to know about safety belts and children. And there are different rules for smaller children and infants. If a child will be riding in the vehicle, see *Older Children on page 3-32* or *Infants and Young Children on page 3-34*. Follow those rules for everyone's protection.

It is very important for all occupants to buckle up. Statistics show that unbelted people are hurt more often in crashes than those who are wearing safety belts.

There are important things to know about wearing a safety belt properly.

Downloaded from www.Manualslib.com manuals search engine

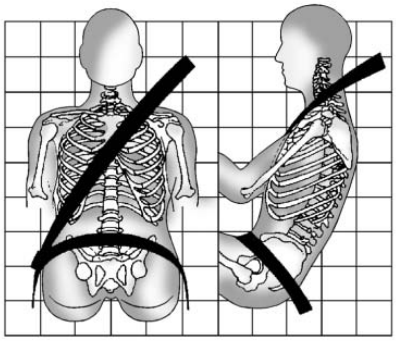

- Sit up straight and always keep your feet on the floor in front of you.
- Always use the correct buckle for your seating position.
- Wear the lap part of the belt low and snug on the hips, just touching the thighs. In a crash, this applies force to the strong pelvic bones and you would be less likely to slide under the lap belt. If you slid under it, the belt would apply force on your abdomen. This could cause serious or even fatal injuries.
- Wear the shoulder belt over the shoulder and across the chest. These parts of the body are best able to take belt restraining forces. The shoulder belt locks if there is a sudden stop or crash.

⚠ WARNING

You can be seriously injured, or even killed, by not wearing your safety belt properly.

- Never allow the lap or shoulder belt to become loose or twisted.
- Never wear the shoulder belt under both arms or behind your back.
- Never route the lap or shoulder belt over an armrest.

Lap-Shoulder Belt

All seating positions in the vehicle have a lap-shoulder belt.

The following instructions explain how to wear a lap-shoulder belt properly.

1. Adjust the seat, if the seat is adjustable, so you can sit up straight. To see how, see “Seats” in the Index.

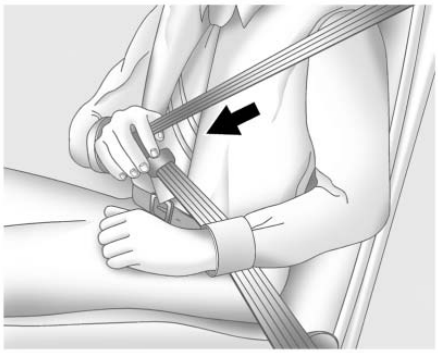

2. Pick up the latch plate and pull the belt across you. Do not let it get twisted.

Downloaded from www.Manualslib.com manuals search engine

The lap-shoulder belt may lock if you pull the belt across you very quickly. If this happens, let the belt go back slightly to unlock it. Then pull the belt across you more slowly.

If the shoulder portion of a passenger belt is pulled out all the way, the child restraint locking feature may be engaged. If this happens, let the belt go back all the way and start again.

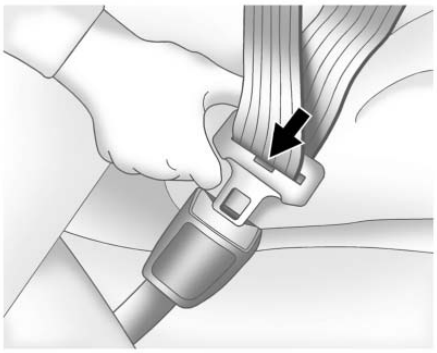

3. Push the latch plate into the buckle until it clicks.

   When using a second row seating position, you may need to remove the safety belt buckle from its storage pocket in the seat.

4. Pull up on the latch plate to make sure it is secure. If the belt is not long enough, see *Safety Belt Extender on page 3-22*.

   Position the release button on the buckle so that the safety belt could be quickly unbuckled if necessary.

5. If equipped with a shoulder belt height adjuster, move it to the height that is right for you. See “Shoulder Belt Height Adjuster” later in this section for instructions on use and important safety information.

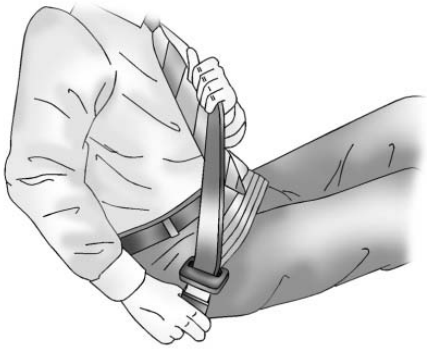

6. To make the lap part tight, pull up on the shoulder belt.

   It may be necessary to pull the stitching on the safety belt through the latch plate to fully tighten the lap belt on smaller occupants.

Downloaded from www.Manualslib.com manuals search engine

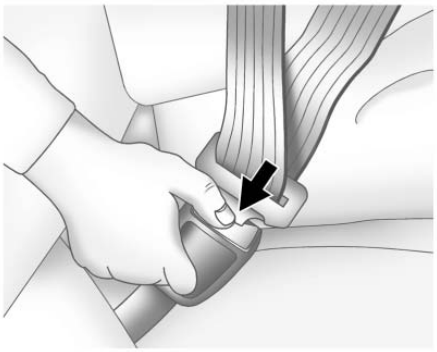

To unlatch the belt, push the button on the buckle. The belt should return to its stowed position. Slide the latch plate up the safety belt webbing when the safety belt is not in use.

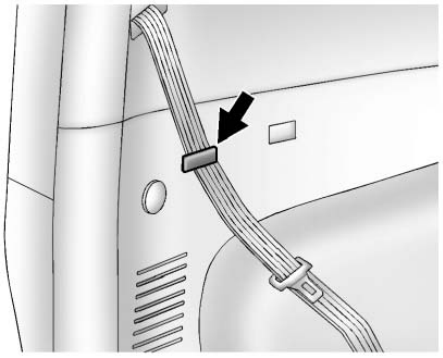

For the outboard second and third row safety belts, insert the belt into the guides on the side trim when the safety belt is not in use.

Before a door is closed, be sure the safety belt is out of the way. If a door is slammed against a safety belt, damage can occur to both the safety belt and the vehicle.

Shoulder Belt Height Adjuster

The vehicle has a shoulder belt height adjuster for the driver and right front passenger seating positions.

Adjust the height so the shoulder portion of the belt is on the shoulder but not falling off of it. The belt should be close to but not contacting the neck. Improper shoulder belt height adjustment could reduce the effectiveness of the safety belt in a crash. See *How to Wear Safety Belts Properly on page 3-16*.

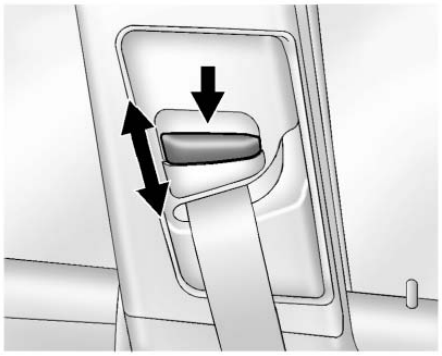

To move the shoulder belt height adjuster down, push down on the release button and move the height adjuster to the desired position.

Downloaded from www.Manualslib.com manuals search engine

You can move the height adjuster up by pushing up on the shoulder belt guide.

After the adjuster is set to the desired position, try to move it down without pushing the release button to make sure it has locked into position.

Safety Belt Pretensioners

This vehicle has safety belt pretensioners for the front outboard occupants. Although the safety belt pretensioners cannot be seen, they are part of the safety belt assembly. They can help tighten the safety belts during the early stages of a moderate to severe frontal, near frontal, or rear crash if the threshold conditions for pretensioner activation are met. And, for vehicles with side impact airbags, safety belt pretensioners can help tighten the safety belts in a side crash or a rollover event.

Pretensioners work only once. If the pretensioners activate in a crash, the pretensioners and probably other parts of the vehicle's safety belt system will need to be replaced. See *Replacing Safety Belt System Parts after a Crash on page 3-23*.

Rear Safety Belt Comfort Guides

Rear safety belt comfort guides may provide added safety belt comfort for older children who have outgrown booster seats and for some adults. When installed on a shoulder belt, the comfort guide positions the shoulder belt away from the neck and head.

This vehicle may have an adjustable comfort guide. Additional comfort guides are available through your dealer.

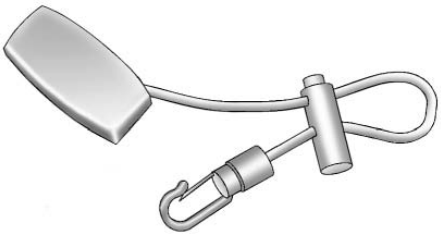

To install the adjustable comfort guide to the seatback and the safety belt:

1. Locate the anchorage loop on the rear outboard seatback, near the top.

Downloaded from www.Manualslib.com manuals search engine

2. Attach the adjustable comfort guide to the anchor loop by threading the hook through the loop.

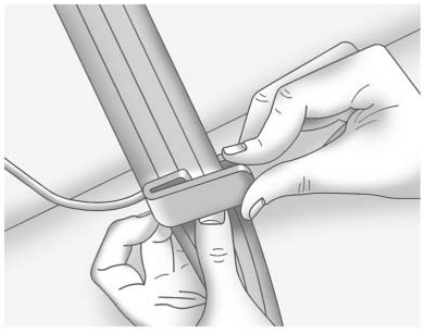

3. Place the guide over the belt, and insert the two edges of the belt into the slots of the guide.

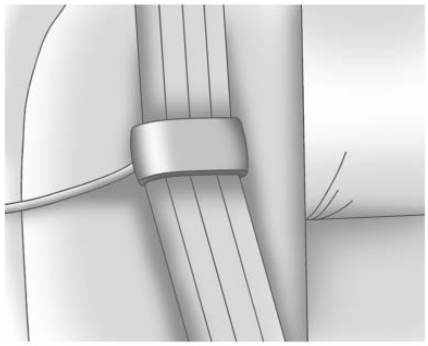

4. Be sure that the belt is not twisted and it lies flat. The elastic cord must be under the belt and the guide on top.
5. The elastic cord on the comfort guide is adjustable. You can make it longer or shorter by squeezing both ends of the plastic adjuster and pulling on the elastic cord or the guide.
6. Adjust the guide so the shoulder portion of the belt is on the shoulder and not falling off of it. The belt should be close to, but not contacting, the neck. Improper comfort guide adjustment could reduce the effectiveness of the safety belt in a crash.

⚠ WARNING

A safety belt that is not properly worn may not provide the protection needed in a crash. The person wearing the belt could be seriously injured. The shoulder belt should go over the shoulder and across the chest. These parts of the body are best able to take belt restraining forces.

Downloaded from www.Manualslib.com manuals search engine

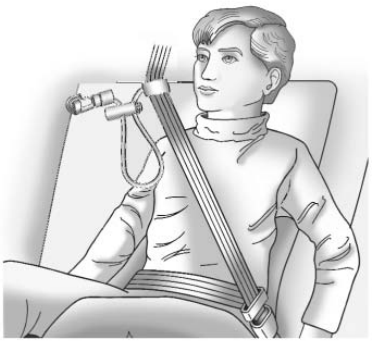

7. Buckle and position the safety belt as described previously in this section. Make sure that the shoulder belt crosses the shoulder.

To remove and store the comfort guide, squeeze the belt edges together so that the safety belt can be removed from the guide. Un-hook the guide from the loop on the seat. Store the guide in a convenient place like the glove box for the next time it is needed.

Safety Belt Use During Pregnancy

Safety belts work for everyone, including pregnant women. Like all occupants, they are more likely to be seriously injured if they do not wear safety belts.

A pregnant woman should wear a lap-shoulder belt, and the lap portion should be worn as low as possible, below the rounding, throughout the pregnancy.

The best way to protect the fetus is to protect the mother. When a safety belt is worn properly, it is more likely that the fetus will not be hurt in a crash. For pregnant women, as for anyone, the key to making safety belts effective is wearing them properly.

Safety Belt Extender

If the vehicle's safety belt will fasten around you, you should use it.

But if a safety belt is not long enough, your dealer will order you an extender. When you go in to order it, take the heaviest coat you will wear, so the extender will be long enough for you. To help avoid personal injury, do not let someone else use it, and use it only for the seat it is made to fit. The extender has been designed for adults. Never use it for securing child seats. To wear it, attach it to the regular safety belt. See the instruction sheet that comes with the extender.

Downloaded from www.Manualslib.com manuals search engine

Safety System Check

Now and then, check that the safety belt reminder light, safety belts, buckles, latch plates, retractors, and anchorages are all working properly. Look for any other loose or damaged safety belt system parts that might keep a safety belt system from doing its job. See your dealer to have it repaired. Torn or frayed safety belts may not protect you in a crash. They can rip apart under impact forces. If a belt is torn or frayed, get a new one right away.

Make sure the safety belt reminder light is working. See *Safety Belt Reminders on page 5-10*.

Keep safety belts clean and dry. See *Safety Belt Care on page 3-23*.

Safety Belt Care

Keep belts clean and dry.

⚠ WARNING

Do not bleach or dye safety belts. It may severely weaken them. In a crash, they might not be able to provide adequate protection. Clean safety belts only with mild soap and lukewarm water.

Replacing Safety Belt System Parts after a Crash

⚠ WARNING

A crash can damage the safety belt system in the vehicle. A damaged safety belt system may not properly protect the person using it, resulting in serious injury or even death in a

(Continued)

WARNING (Continued)

crash. To help make sure the safety belt systems are working properly after a crash, have them inspected and any necessary replacements made as soon as possible.

After a minor crash, replacement of safety belts may not be necessary. But the safety belt assemblies that were used during any crash may have been stressed or damaged. See your dealer to have the safety belt assemblies inspected or replaced.

Downloaded from www.Manualslib.com manuals search engine

New parts and repairs may be necessary even if the safety belt system was not being used at the time of the crash.

Have the safety belt pretensioners checked if the vehicle has been in a crash, or if the airbag readiness light stays on after you start the vehicle or while you are driving. See *Airbag Readiness Light on page 5-11*.

Airbag System

The vehicle has the following airbags:

- A frontal airbag for the driver.
- A frontal airbag for the front outboard passenger.
- A seat-mounted side impact airbag for the driver.
- A seat-mounted side impact airbag for the front outboard passenger.
- A roof-rail airbag for the driver and the passenger seated directly behind the driver.
- A roof-rail airbag for the front outboard passenger and the passenger seated directly behind the front outboard passenger.

All vehicle airbags have the word AIRBAG on the trim or on a label near the deployment opening.

For frontal airbags, the word AIRBAG is on the center of the steering wheel for the driver and on the instrument panel for the front outboard passenger.

For seat-mounted side impact airbags, the word AIRBAG is on the side of the seatback closest to the door.

For roof-rail airbags, the word AIRBAG is on the ceiling or trim.

Airbags are designed to supplement the protection provided by safety belts. Even though today's airbags are also designed to help reduce the risk of injury from the force of an inflating bag, all airbags must inflate very quickly to do their job.

Downloaded from www.Manualslib.com manuals search engine

Here are the most important things to know about the airbag system:

⚠ WARNING

You can be severely injured or killed in a crash if you are not wearing your safety belt, even with airbags. Airbags are designed to work with safety belts, not replace them. Also, airbags are not designed to inflate in every crash. In some crashes safety belts are the only restraint. See *When Should an Airbag Inflate? on page 3-27*.

Wearing your safety belt during a crash helps reduce the chance of hitting things inside the vehicle or being ejected from it. Airbags are “supplemental restraints” to the safety belts. Everyone in the vehicle should wear a safety belt properly, whether or not there is an airbag for that person.

⚠ WARNING

Because airbags inflate with great force and faster than the blink of an eye, anyone who is up against, or very close to any airbag when it inflates can be seriously injured or killed. Do not sit unnecessarily close to any airbag, as you would be if sitting on the edge of the seat or leaning forward. Safety belts help keep you in position before and during a crash. Always wear a safety belt, even with airbags. The driver should sit as far back as possible while still maintaining control of the vehicle.

Occupants should not lean on or sleep against the door or side windows in seating positions with seat-mounted side impact airbags and/or roof-rail airbags.

⚠ WARNING

Children who are up against, or very close to, any airbag when it inflates can be seriously injured or killed. Airbags plus lap-shoulder belts offer protection for adults and older children, but not for young children and infants. Neither the vehicle's safety belt system nor its airbag system is designed for them. Young children and infants need the protection that a child restraint system can provide. Always secure children properly in the vehicle. To read how, see *Older Children on page 3-32* or *Infants and Young Children on page 3-34*.

Downloaded from www.Manualslib.com manuals search engine

There is an airbag readiness light on the instrument panel cluster, which shows the airbag symbol.

The system checks the airbag electrical system for malfunctions. The light tells you if there is an electrical problem. See *Airbag Readiness Light on page 5-11* for more information.

Where Are the Airbags?

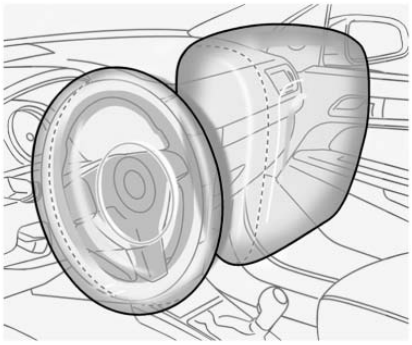

The driver frontal airbag is in the center of the steering wheel.

The front outboard passenger frontal airbag is in the passenger side instrument panel.

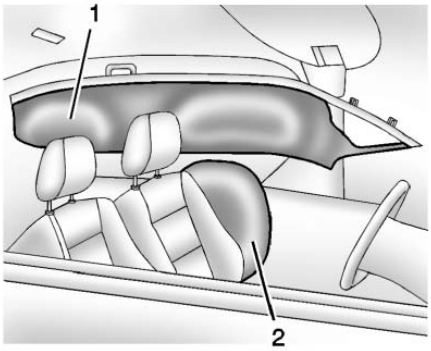

Driver Side Shown, Passenger Side Similar

The driver and front outboard passenger seat-mounted side impact airbags (2) are in the side of the seatbacks closest to the door.

The roof-rail airbags (1) for the driver, front outboard passenger, and second row outboard passengers are in the ceiling above the side windows.

Downloaded from www.Manualslib.com manuals search engine

⚠ WARNING

If something is between an occupant and an airbag, the airbag might not inflate properly or it might force the object into that person causing severe injury or even death. The path of an inflating airbag must be kept clear. Do not put anything between an occupant and an airbag, and do not attach or put anything on the steering wheel hub or on or near any other airbag covering.

Do not use seat accessories that block the inflation path of a seat-mounted side impact airbag.

Never secure anything to the roof of a vehicle with roof-rail airbags by routing a rope or tie-down through any door or window opening. If you do, the path of an inflating roof-rail airbag will be blocked.

When Should an Airbag Inflate?

Frontal airbags are designed to inflate in moderate to severe frontal or near frontal crashes to help reduce the potential for severe injuries, mainly to the driver's or right front passenger's head and chest. However, they are only designed to inflate if the impact exceeds a predetermined deployment threshold. Deployment thresholds are used to predict how severe a crash is likely to be in time for the airbags to inflate and help restrain the occupants.

Whether the frontal airbags will or should inflate is not based primarily on how fast the vehicle is traveling. It depends largely on what is hit, the direction of the impact, and how quickly the vehicle slows down.

Frontal airbags may inflate at different crash speeds depending on whether the vehicle hits an object straight on or at an angle, and whether the object is fixed or moving, rigid or deformable, narrow or wide.

Thresholds can also vary with specific vehicle design.

Frontal airbags are not intended to inflate during vehicle rollovers, rear impacts, or in many side impacts.

In addition, the vehicle has dual-stage frontal airbags. Dual-stage airbags adjust the restraint according to crash severity. The vehicle has electronic frontal sensors, that help the sensing system distinguish between a moderate frontal impact and a more severe frontal impact. For moderate frontal impacts, dual-stage airbags inflate at a level less than full deployment. For more severe frontal impacts, full deployment occurs.

Downloaded from www.Manualslib.com manuals search engine

The vehicle has seat-mounted side impact and roof-rail airbags. See *Airbag System on page 3-24*. Seat-mounted side impact and roof-rail airbags are intended to inflate in moderate to severe side crashes, depending on the location of the impact. In addition, these roof-rail airbags are intended to inflate during a rollover or in a severe frontal impact. Seat-mounted side impact and roof-rail airbags will inflate if the crash severity is above the system's designed threshold level. The threshold level can vary with specific vehicle design.

Seat-mounted side impact airbags are not intended to inflate in frontal impacts, near frontal impacts, rollovers, or rear impacts. Roof-rail airbags are not intended to inflate in rear impacts. A seat-mounted side impact airbag is intended to inflate on the side of the vehicle that is struck. Both roof-rail airbags will inflate when either side of the vehicle is struck, or if the sensing system predicts that the vehicle is about to roll over on its side, or in a severe frontal impact.

In any particular crash, no one can say whether an airbag should have inflated simply because of the vehicle damage or repair costs.

What Makes an Airbag Inflate?

In a deployment event, the sensing system sends an electrical signal triggering a release of gas from the inflator. Gas from the inflator fills the airbag causing the bag to break out of the cover. The inflator, the airbag, and related hardware are all part of the airbag module.

For airbag location, see *Where Are the Airbags? on page 3-26*.

How Does an Airbag Restrain?

In moderate to severe frontal or near frontal collisions, even belted occupants can contact the steering wheel or the instrument panel. In moderate to severe side collisions, even belted occupants can contact the inside of the vehicle.

Airbags supplement the protection provided by safety belts by distributing the force of the impact more evenly over the occupant's body.

Rollover capable roof-rail airbags are designed to help contain the head and chest of occupants in the outboard seating positions in the first and second rows. The rollover capable roof-rail airbags are designed to help reduce the risk of full or partial ejection in rollover events, although no system can prevent all such ejections.

But airbags would not help in many types of collisions, primarily because the occupant's motion is not toward those airbags. See *When Should an Airbag Inflate? on page 3-27*.

Downloaded from www.Manualslib.com manuals search engine

Airbags should never be regarded as anything more than a supplement to safety belts.

What Will You See after an Airbag Inflates?

After the frontal airbags and seat-mounted side impact airbags inflate, they quickly deflate, so quickly that some people may not even realize an airbag inflated. Roof-rail airbags may still be at least partially inflated for some time after they inflate. Some components of the airbag module may be hot for several minutes. For location of the airbags, see *Where Are the Airbags? on page 3-26*.

The parts of the airbag that come into contact with you may be warm, but not too hot to touch. There may be some smoke and dust coming from the vents in the deflated airbags. Airbag inflation does not prevent the driver from seeing out of the windshield or being able to steer the vehicle, nor does it prevent people from leaving the vehicle.

⚠ WARNING

When an airbag inflates, there may be dust in the air. This dust could cause breathing problems for people with a history of asthma or other breathing trouble. To avoid this, everyone in the vehicle should get out as soon as it is safe to do so. If you have breathing problems but cannot get out of the vehicle after an airbag inflates, then get fresh air by opening a window or a door. If you experience breathing problems following an airbag deployment, you should seek medical attention.

The vehicle has a feature that may automatically unlock the doors, turn the interior lamps on, turn the hazard warning flashers on, and shut off the fuel system after the airbags inflate. You can lock the doors, turn the interior lamps off, and turn the hazard warning flashers off by using the controls for those features.

⚠ WARNING

A crash severe enough to inflate the airbags may have also damaged important functions in the vehicle, such as the fuel system, brake and steering systems, etc. Even if the vehicle appears to be drivable after a moderate crash, there may be concealed damage that could make it difficult to safely operate the vehicle.

Use caution if you should attempt to restart the engine after a crash has occurred.

In many crashes severe enough to inflate the airbag, windshields are broken by vehicle deformation.

Downloaded from www.Manualslib.com manuals search engine

Additional windshield breakage may also occur from the front outboard passenger airbag.

- Airbags are designed to inflate only once. After an airbag inflates, you will need some new parts for the airbag system. If you do not get them, the airbag system will not be there to help protect you in another crash. A new system will include airbag modules and possibly other parts. The service manual for the vehicle covers the need to replace other parts.
- The vehicle has a crash sensing and diagnostic module which records information after a crash. See *Vehicle Data Recording and Privacy on page 13-14* and *Event Data Recorders on page 13-14*.
- Let only qualified technicians work on the airbag systems. Improper service can mean that an airbag system will not work properly. See your dealer for service.

Servicing the Airbag-Equipped Vehicle

Airbags affect how the vehicle should be serviced. There are parts of the airbag system in several places around the vehicle. Your dealer and the service manual have information about servicing the vehicle and the airbag system. To purchase a service manual, see *Service Publications Ordering Information on page 13-11*.

⚠ WARNING

For up to 10 seconds after the vehicle is turned off and the battery is disconnected, an airbag can still inflate during improper service. You can be injured if you are close to an airbag when it inflates. Avoid yellow connectors.

(Continued)

WARNING (Continued)

They are probably part of the airbag system. Be sure to follow proper service procedures, and make sure the person performing work for you is qualified to do so.

Adding Equipment to the Airbag-Equipped Vehicle

Adding accessories that change the vehicle's frame, bumper system, height, front end or side sheet metal, may keep the airbag system from working properly. The operation of the airbag system can also be affected by changing or moving any parts of the front seats, safety belts, the airbag sensing and diagnostic module, steering wheel, instrument panel, roof-rail airbag modules, ceiling headliner or pillar garnish trim, overhead console, front sensors, side impact sensors, or airbag wiring.

Downloaded from www.Manualslib.com manuals search engine

Your dealer and the service manual have information about the location of the airbag sensors, sensing and diagnostic module, and airbag wiring.

If the vehicle has rollover roof-rail airbags, see *Different Size Tires and Wheels on page 10-53* for important information.

If you have to modify your vehicle because you have a disability and have questions about whether the modifications will affect the vehicle's airbag system, or if you have questions about whether the airbag system will be affected if the vehicle is modified for any other reason, call Customer Assistance. See *Customer Assistance Offices on page 13-3*.

Airbag System Check

The airbag system does not need regularly scheduled maintenance or replacement. Make sure the airbag readiness light is working. See *Airbag Readiness Light on page 5-11*.

Notice: **If an airbag covering is damaged, opened, or broken, the airbag may not work properly. Do not open or break the airbag coverings. If there are any opened or broken airbag covers, have the airbag covering and/or airbag module replaced. For the location of the airbags, see *Where Are the Airbags? on page 3-26*. See your dealer for service.**

Replacing Airbag System Parts after a Crash

⚠ WARNING

A crash can damage the airbag systems in the vehicle.
A damaged airbag system may not work properly and may not protect you and your

(Continued)

WARNING (Continued)

passenger(s) in a crash, resulting in serious injury or even death. To help make sure the airbag systems are working properly after a crash, have them inspected and any necessary replacements made as soon as possible.

If an airbag inflates, you will need to replace airbag system parts. See your dealer for service.

If the airbag readiness light stays on after the vehicle is started or comes on when you are driving, the airbag system may not work properly. Have the vehicle serviced right away. See *Airbag Readiness Light on page 5-11*.

Downloaded from www.Manualslib.com manuals search engine

Child Restraints

Older Children

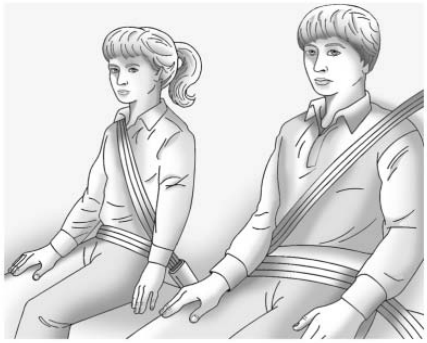

Older children who have outgrown booster seats should wear the vehicle safety belts.

The manufacturer's instructions that come with the booster seat state the weight and height limitations for that booster. Use a booster seat with a lap-shoulder belt until the child passes the fit test below:

- Sit all the way back on the seat. Do the knees bend at the seat edge? If yes, continue. If no, return to the booster seat.
- Buckle the lap-shoulder belt. Does the shoulder belt rest on the shoulder? If yes, continue. If no, return to the booster seat.
- Does the lap belt fit low and snug on the hips, touching the thighs? If yes, continue. If no, return to the booster seat.
- Can proper safety belt fit be maintained for the length of the trip? If yes, continue. If no, return to the booster seat.

Q: What is the proper way to wear safety belts?

A: An older child should wear a lap-shoulder belt and get the additional restraint a shoulder belt can provide. The shoulder belt should not cross the face or neck. The lap belt should fit snugly below the hips, just touching the top of the thighs. This applies belt force to the child's pelvic bones in a crash. It should never be worn over the abdomen, which could cause severe or even fatal internal injuries in a crash.

According to accident statistics, children and infants are safer when properly restrained in a child restraint system or infant restraint system secured in a rear seating position.

Downloaded from www.Manualslib.com manuals search engine

In a crash, children who are not buckled up can strike other people who are buckled up, or can be thrown out of the vehicle. Older children need to use safety belts properly.

⚠ WARNING

Never allow more than one child to wear the same safety belt. The safety belt cannot properly spread the impact forces. In a crash, they can be crushed together and seriously injured. A safety belt must be used by only one person at a time.

⚠ WARNING

Never allow a child to wear the safety belt with the shoulder belt behind their back. A child can be seriously injured by not wearing the lap-shoulder belt properly. In a crash, the child would not be restrained by the shoulder belt. The child could move too far forward increasing the chance of head and neck injury. The child might also slide under the lap

(Continued)

WARNING (Continued)

belt. The belt force would then be applied right on the abdomen. That could cause serious or fatal injuries. The shoulder belt should go over the shoulder and across the chest.

Downloaded from www.Manualslib.com manuals search engine

Infants and Young Children

Everyone in a vehicle needs protection! This includes infants and all other children. Neither the distance traveled nor the age and size of the traveler changes the need, for everyone, to use safety restraints. In fact, the law in every Canadian province says children up to some age must be restrained while in a vehicle.

⚠ WARNING

Children can be seriously injured or strangled if a shoulder belt is wrapped around their neck and the safety belt continues to tighten. Never leave children unattended in a vehicle and never allow children to play with the safety belts.

Airbags plus lap-shoulder belts offer protection for adults and older children, but not for young children and infants. Neither the vehicle's safety belt system nor its airbag system is designed for them. Every time infants and young children ride in vehicles, they should have the protection provided by appropriate child restraints.

Children who are not restrained properly can strike other people, or can be thrown out of the vehicle.

⚠ WARNING

Never hold an infant or a child while riding in a vehicle. Due to crash forces, an infant or a child will become so heavy it is not possible to hold it during a crash. For example, in a crash at only 40 km/h (25 mph), a 5.5 kg (12 lb) infant will suddenly become a 110 kg (240 lb) force on a person's arms. An infant should be secured in an appropriate restraint.

⚠ WARNING

Children who are up against, or very close to, any airbag when it inflates can be seriously injured or killed. Never put a rear-facing child restraint in the right front seat. Secure a rear-facing child restraint in a rear seat. It is also better to secure a forward-facing child restraint in a rear seat. If you must secure a forward-facing child restraint in the right front

(Continued)

Downloaded from www.Manualslib.com manuals search engine

WARNING (Continued)

seat, always move the front passenger seat as far back as it will go.

Q: What are the different types of add-on child restraints?

A: Add-on child restraints, which are purchased by the vehicle owner, are available in four basic types. Selection of a particular restraint should take into consideration not only the child's weight, height, and age but also whether or not the restraint will be compatible with the motor vehicle in which it will be used.

For most basic types of child restraints, there are many different models available. When purchasing a child restraint, be sure it is designed to be used in a motor vehicle. If it is, the restraint will have a label saying that it meets federal motor vehicle safety standards.

The restraint manufacturer's instructions that come with the restraint state the weight and height limitations for a particular child restraint. In addition, there are many kinds of restraints available for children with special needs.

⚠ WARNING

To reduce the risk of neck and head injury during a crash, infants need complete support. In a crash, if an infant is in a rear-facing child restraint, the crash forces can be distributed across the strongest part of an infant's body, the back and shoulders. Infants should always be secured in rear-facing child restraints.

Downloaded from www.Manualslib.com manuals search engine

⚠ WARNING

A young child's hip bones are still so small that the vehicle's regular safety belt may not remain low on the hip bones, as it should. Instead, it may settle up around the child's abdomen. In a crash, the belt would apply force on a body area that is unprotected by any bony structure. This alone could cause serious or fatal injuries. To reduce the risk of serious or fatal injuries during a crash, young children should always be secured in appropriate child restraints.

Child Restraint Systems

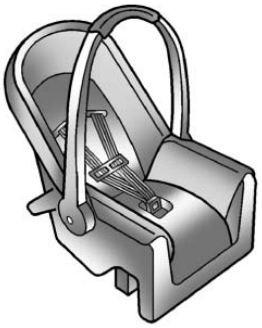

Rear-Facing Infant Seat

A rear-facing infant seat provides restraint with the seating surface against the back of the infant.

The harness system holds the infant in place and, in a crash, acts to keep the infant positioned in the restraint.

Forward-Facing Child Seat

A forward-facing child seat provides restraint for the child's body with the harness.

Downloaded from www.Manualslib.com manuals search engine

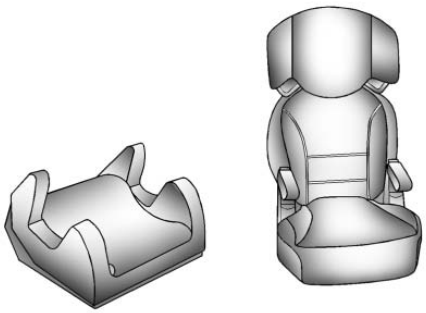

Booster Seats

A booster seat is a child restraint designed to improve the fit of the vehicle's safety belt system.
A booster seat can also help a child to see out the window.

Securing an Add-On Child Restraint in the Vehicle

⚠ WARNING

A child can be seriously injured or killed in a crash if the child restraint is not properly secured in the vehicle. Secure the child restraint properly in the vehicle using the vehicle safety belt or LATCH system, following the instructions that came with that child restraint and the instructions in this manual.

To help reduce the chance of injury, the child restraint must be secured in the vehicle. Child restraint systems must be secured in vehicle seats by lap belts or the lap belt portion of a lap-shoulder belt, or by the LATCH system.

See *Lower Anchors and Tethers for Children (LATCH System) on page 3-39* for more information. Children can be endangered in a crash if the child restraint is not properly secured in the vehicle.

When securing an add-on child restraint, refer to the instructions that come with the restraint which may be on the restraint itself or in a booklet, or both, and to this manual. The child restraint instructions are important, so if they are not available, obtain a replacement copy from the manufacturer.

Keep in mind that an unsecured child restraint can move around in a collision or sudden stop and injure people in the vehicle. Be sure to properly secure any child restraint in the vehicle — even when no child is in it.

Downloaded from www.Manualslib.com manuals search engine

In some areas, Certified Child Passenger Safety Technicians (CPSTs) are available to inspect and demonstrate how to correctly use and install child restraints. For CPST availability in Canada, check with Transport Canada or the Provincial Ministry of Transportation office.

Securing the Child within the Child Restraint

⚠ WARNING

A child can be seriously injured or killed in a crash if the child is not properly secured in the child restraint. Secure the child properly following the instructions that came with that child restraint.

Where to Put the Restraint

According to accident statistics, children and infants are safer when properly restrained in a child restraint system or infant restraint system secured in a rear seating position.

We recommend that children and child restraints be secured in a rear seat, including: an infant or a child riding in a rear-facing child restraint; a child riding in a forward-facing child seat; an older child riding in a booster seat; and children, who are large enough, using safety belts.

Never put a rear-facing child seat in the front. This is because the risk to the rear-facing child is so great if the airbag deploys.

⚠ WARNING

A child in a rear-facing child restraint can be seriously injured or killed if the passenger airbag inflates. This is because the back of the rear-facing child restraint would be very close to the inflating airbag. Secure rear-facing child restraints in a rear seat.

A child in a forward-facing child restraint can be seriously injured or killed if the outboard front passenger airbag inflates and the passenger seat is in a forward position. If you secure a forward-facing child restraint in the outboard front passenger seat, always move the passenger seat as far back as it will go. It is better to secure the child restraint in a rear seat.

Downloaded from www.Manualslib.com manuals search engine

When securing a child restraint in a rear seating position, study the instructions that came with the child restraint to make sure it is compatible with this vehicle.

Child restraints and booster seats vary considerably in size, and some may fit in certain seating positions better than others. Always make sure the child restraint is properly secured.

Depending on where you place the child restraint and the size of the child restraint, you may not be able to access adjacent safety belt assemblies or LATCH anchors for additional passengers or child restraints. Adjacent seating positions should not be used if the child restraint prevents access to or interferes with the routing of the safety belt.

Wherever a child restraint is installed, be sure to secure the child restraint properly.

Keep in mind that an unsecured child restraint can move around in a collision or sudden stop and injure people in the vehicle. Be sure to properly secure any child restraint in the vehicle — even when no child is in it.

Lower Anchors and Tethers for Children (LATCH System)

The LATCH system secures a child restraint during driving or in a crash. LATCH attachments on the child restraint are used to attach the child restraint to the anchors in the vehicle. This system is designed to make installation of a child restraint easier.

Make sure that a LATCH-compatible child restraint is properly installed using the anchors, or use the vehicle's safety belts to secure the restraint, following the instructions that came with that restraint, and also the instructions in this manual. When installing a child restraint with a top tether, you must also use either the lower anchors or the safety belts to properly secure the child restraint. A child restraint must never be installed using only the top tether and anchor.

In order to use the LATCH system in your vehicle, you need a child restraint that has LATCH attachments. The child restraint manufacturer will provide you with instructions on how to use the child restraint and its attachments. The following explains how to attach a child restraint with these attachments in your vehicle.

Not all vehicle seating positions or child restraints have lower anchors and attachments or top tether anchors and attachments.

Downloaded from www.Manualslib.com manuals search engine

Lower Anchors

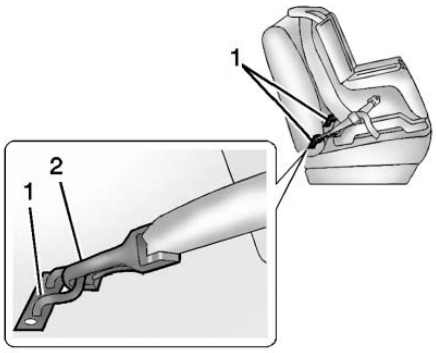

Lower anchors (1) are metal bars built into the vehicle. There are two lower anchors for each LATCH seating position that will accommodate a child restraint with lower attachments (2).

Top Tether Anchor

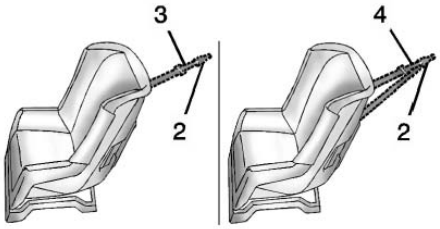

A top tether (3, 4) anchors the top of the child restraint to the vehicle. A top tether anchor is built into the vehicle. The top tether attachment (2) on the child restraint connects to the top tether anchor in the vehicle in order to reduce the forward movement and rotation of the child restraint during driving or in a crash.

The child restraint may have a single tether (3) or a dual tether (4). Either will have a single attachment (2) to secure the top tether to the anchor.

Some child restraints that have a top tether are designed for use with or without the top tether being attached. Others require the top tether always to be attached. In Canada, the law requires that forward-facing child restraints have a top tether, and that the tether be attached. Be sure to read and follow the instructions for your child restraint.

Downloaded from www.Manualslib.com manuals search engine

Lower Anchor and Top Tether Anchor Locations

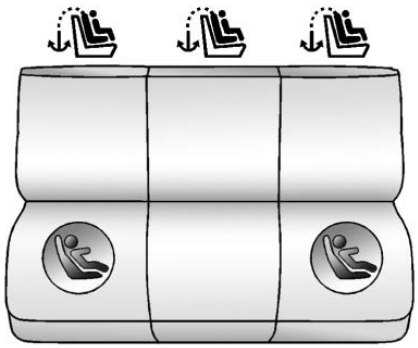

Second Row Seat

(Top Tether Anchor): Seating positions with top tether anchors.

(Lower Anchor): Seating positions with two lower anchors.

To assist in locating the lower anchors, each seating position with lower anchors has two labels, near the crease between the seatback and the seat cushion.

To assist in locating the top tether anchors, the top tether anchor symbol is near the anchor.

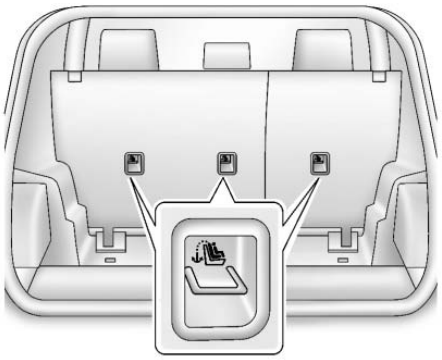

The top tether anchors for the second row seating positions are on the back of the second row seatbacks. Be sure to use an anchor on the same side of the vehicle as the seating position where the child restraint will be placed.

Do not secure a child restraint in a position without a top tether anchor if a national or local law requires that the top tether be attached, or if the instructions that come with the child restraint say that the top tether must be attached.

Downloaded from www.Manualslib.com manuals search engine

According to accident statistics, children and infants are safer when properly restrained in a child restraint system or infant restraint system secured in a rear seating position. See *Where to Put the Restraint on page 3-38* for additional information.

Securing a Child Restraint Designed for the LATCH System

⚠ WARNING

If a LATCH-type child restraint is not attached to anchors, the child restraint will not be able to protect the child correctly. In a crash, the child could be seriously injured or killed. Install a LATCH-type child restraint properly using the anchors, or use the vehicle safety belts to secure the restraint, following the instructions that came with the child restraint and the instructions in this manual.

⚠ WARNING

Do not attach more than one child restraint to a single anchor. Attaching more than one child restraint to a single anchor could cause the anchor or attachment to come loose or even break during a crash. A child or others could be injured. To reduce the risk of serious or fatal injuries during a crash, attach only one child restraint per anchor.

⚠ WARNING

Children can be seriously injured or strangled if a shoulder belt is wrapped around their neck and the safety belt continues to tighten. Buckle any unused safety belts behind the child restraint so children cannot reach them. Pull the shoulder belt all the way out

(Continued)

WARNING (Continued)

of the retractor to set the lock, if the vehicle has one, after the child restraint has been installed.

Notice: **Do not let the LATCH attachments rub against the vehicle's safety belts. This may damage these parts. If necessary, move buckled safety belts to avoid rubbing the LATCH attachments.**

Do not fold the empty rear seat with a safety belt buckled. This could damage the safety belt or the seat. Unbuckle and return the safety belt to its stowed position, before folding the seat.

If you need to secure more than one child restraint in the rear seat, see *Where to Put the Restraint on page 3-38*.

This system is designed to make installation of child restraints easier. When using lower anchors, do not

Downloaded from www.Manualslib.com manuals search engine

use the vehicle's safety belts. Instead use the vehicle's anchors and child restraint attachments to secure the restraints. Some restraints also use another vehicle anchor to secure a top tether.

1. Attach and tighten the lower attachments to the lower anchors. If the child restraint does not have lower attachments or the desired seating position does not have lower anchors, secure the child restraint with the top tether and the safety belts. Refer to your child restraint manufacturer instructions and the instructions in this manual.

   1.1. Find the lower anchors for the desired seating position. Make sure there are no foreign objects around lower anchors. Foreign objects can interfere with the proper latching of the child restraint to the anchors.

   1.2. Put the child restraint on the seat.

   1.3. Attach and tighten the lower attachments on the child restraint to the lower anchors.

2. If the child restraint manufacturer recommends that the top tether be attached, attach and tighten the top tether to the top tether anchor, if equipped. Refer to the child restraint instructions and the following steps:

   2.1. Find the top tether anchor.

   2.2. Route, attach, and tighten the top tether according to your child restraint instructions and the following instructions:

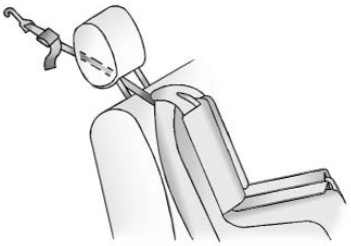

If the rear seating position you are using has an adjustable headrest or head restraint and you are using a single tether, raise the headrest or head restraint and route the tether under the headrest or head restraint and in between the headrest or head restraint posts.

Downloaded from www.Manualslib.com manuals search engine

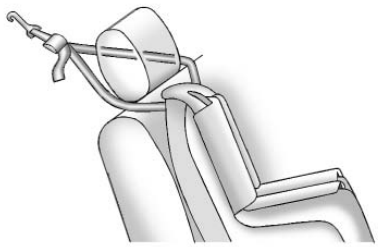

If the rear seating position you are using has an adjustable headrest or head restraint and you are using a dual tether, raise the headrest or head restraint and route the tether under the headrest or head restraint and around the headrest or head restraint posts.

3. Before placing a child in the child restraint, make sure it is securely held in place. To check, grasp the child restraint at the LATCH path and attempt to move it side to side and back and forth. There should be no more than 2.5 cm (1 in) of movement, for proper installation.

Replacing LATCH System Parts After a Crash

⚠ WARNING

A crash can damage the LATCH system in the vehicle. A damaged LATCH system may not properly secure the child restraint, resulting in serious injury or even death in a crash. To help make sure the LATCH system is working properly after a crash, see your dealer to have the system inspected and any necessary replacements made as soon as possible.

If the vehicle has the LATCH system and it was being used during a crash, new LATCH system parts may be needed.

New parts and repairs may be necessary even if the LATCH system was not being used at the time of the crash.

Securing Child Restraints (Rear Seat)

When securing a child restraint in a rear seating position, study the instructions that came with the child restraint to make sure it is compatible with this vehicle.

If the child restraint has the LATCH system, see *Lower Anchors and Tethers for Children (LATCH System) on page 3-39* for how and where to install the child restraint using LATCH. If a child restraint is secured in the vehicle using a safety belt and it uses a top tether, see *Lower Anchors and Tethers for Children (LATCH System) on page 3-39* for top tether anchor locations.

Do not secure a child seat in a position without a top tether anchor if a national or local law requires

Downloaded from www.Manualslib.com manuals search engine

that the top tether be anchored, or if the instructions that come with the child restraint say that the top strap must be anchored.

In Canada, the law requires that forward-facing child restraints have a top tether, and that the tether be attached.

If the child restraint does not have the LATCH system, you will be using the safety belt to secure the child restraint in this position. Be sure to follow the instructions that came with the child restraint. Secure the child in the child restraint when and as the instructions say.

If more than one child restraint needs to be installed in the rear seat, be sure to read *Where to Put the Restraint on page 3-38*.

1. Put the child restraint on the seat.

   For outboard second and third row seating positions, remove the safety belt from the guide.

   Do not secure the child restraint with the safety belt routed through the guide.

2. Pick up the latch plate, and run the lap and shoulder portions of the vehicle's safety belt through or around the restraint. The child restraint instructions will show you how.

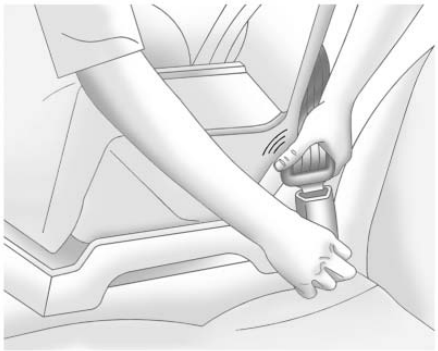

3. Push the latch plate into the buckle until it clicks.

   Position the release button on the buckle so that the safety belt could be quickly unbuckled if necessary.

4. Pull the shoulder belt all the way out of the retractor to set the lock. When the retractor lock is set, the belt can be tightened but not pulled out of the retractor.

Downloaded from www.Manualslib.com manuals search engine

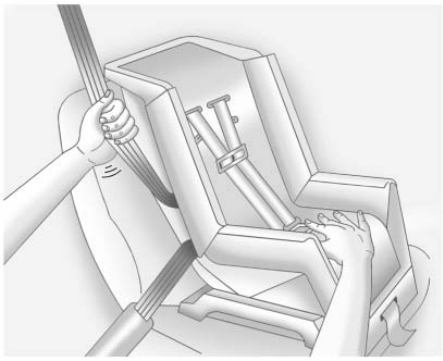

5. To tighten the belt, push down on the child restraint, pull the shoulder portion of the belt to tighten the lap portion of the belt, and feed the shoulder belt back into the retractor. When installing a forward-facing child restraint, it may be helpful to use your knee to push down on the child restraint as you tighten the belt.

   Try to pull the belt out of the retractor to make sure the retractor is locked. If the retractor is not locked, repeat Steps 4 and 5.

6. If the child restraint has a top tether, follow the child restraint manufacturer's instructions regarding the use of the top tether. See *Lower Anchors and Tethers for Children (LATCH System) on page 3-39* for more information.

7. Before placing a child in the child restraint, make sure it is securely held in place. To check, grasp the child restraint at the safety belt path and attempt to move it side to side and back and forth. When the child restraint is properly installed, there should be no more than 2.5 cm (1 in) of movement.

To remove the child restraint, unbuckle the vehicle safety belt and let it return to the stowed position. For third row seating positions, return the safety belt into the guide by sliding the webbing through the opening on the guide. If the top tether is attached to a top tether anchor, disconnect it.

Securing Child Restraints (Front Passenger Seat)

This vehicle has airbags. A rear seat is a safer place to secure a forward-facing child restraint. See *Where to Put the Restraint on page 3-38*.

Never put a rear-facing child seat in the front. This is because the risk to the rear-facing child is so great, if the airbag deploys.

⚠ WARNING

A child in a rear-facing child restraint can be seriously injured or killed if the passenger airbag inflates. This is because the back of the rear-facing child restraint would be very close to the inflating airbag. Secure rear-facing child restraints in a rear seat.

(Continued)

Downloaded from www.Manualslib.com manuals search engine

WARNING (Continued)

A child in a forward-facing child restraint can be seriously injured or killed if the outboard front passenger airbag inflates and the passenger seat is in a forward position. If you secure a forward-facing child restraint in the outboard front passenger seat, always move the passenger seat as far back as it will go. It is better to secure the child restraint in a rear seat.

If the child restraint has the LATCH system, see *Lower Anchors and Tethers for Children (LATCH System) on page 3-39* for how and where to install the child restraint using LATCH. If a child restraint is secured using a safety belt and it uses a top tether, see *Lower Anchors and Tethers for Children (LATCH System) on page 3-39* for top tether anchor locations.

Do not secure a child seat in a position without a top tether anchor if a national or local law requires that the top tether be anchored, or if the instructions that come with the child restraint say that the top strap must be anchored.

In Canada, the law requires that forward-facing child restraints have a top tether, and that the tether be attached.

You will be using the lap-shoulder belt to secure the child restraint in this position. Follow the instructions that came with the child restraint.

1. Move the seat as far back as it will go before securing the forward-facing child restraint.
2. Put the child restraint on the seat.
3. Pick up the latch plate, and run the lap and shoulder portions of the vehicle's safety belt through or around the restraint. The child restraint instructions will show you how.

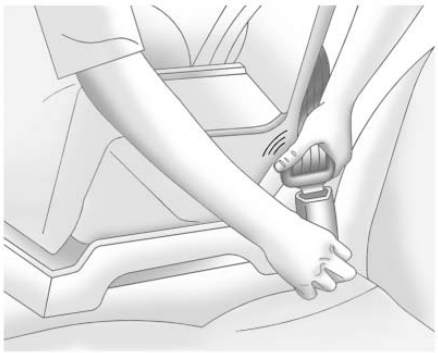

4. Push the latch plate into the buckle until it clicks.

   Position the release button on the buckle, so that the safety belt could be quickly unbuckled if necessary.

Downloaded from www.Manualslib.com manuals search engine

5. Pull the shoulder belt all the way out of the retractor to set the lock. When the retractor lock is set, the belt can be tightened but not pulled out of the retractor.

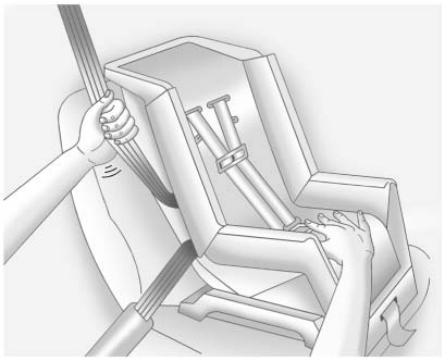

6. To tighten the belt, push down on the child restraint, pull the shoulder portion of the belt to tighten the lap portion of the belt, and feed the shoulder belt back into the retractor. When installing a forward-facing child restraint, it may be helpful to use your knee to push down on the child restraint as you tighten the belt.

   Try to pull the belt out of the retractor to make sure the retractor is locked. If the retractor is not locked, repeat Steps 5 and 6.

   If the vehicle does not have a rear seat and the child restraint has a top tether, follow the child restraint manufacturer's instructions regarding the use of the top tether. See *Lower Anchors and Tethers for Children (LATCH System) on page 3-39* for more information.

7. Before placing a child in the child restraint, make sure it is securely held in place. To check, grasp the child restraint at the safety belt path and attempt to move it side to side and back and forth. When the child restraint is properly installed, there should be no more than 2.5 cm (1 in) of movement.

To remove the child restraint, unbuckle the vehicle safety belt and let it return to the stowed position.

Downloaded from www.Manualslib.com manuals search engine

Storage

Storage Compartments
Instrument Panel Storage 4-1
Glove Box 4-1
Front Storage 4-1
Center Console Storage 4-2

Additional Storage Features
Cargo Cover 4-2
Lashing Eyes 4-4
Cargo Management System 4-4
Convenience Net 4-4

Roof Rack System
Roof Rack System 4-5

Storage Compartments

Instrument Panel Storage

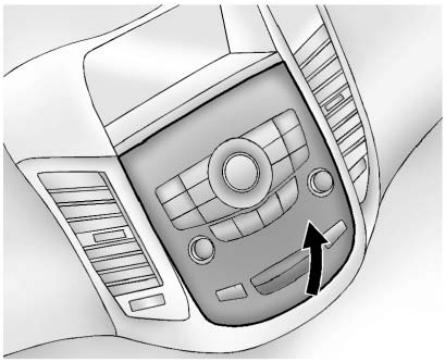

There is a storage area behind the radio. Push up on the button and release; the door automatically opens. There is an auxiliary power outlet inside and if equipped a USB port. See *Power Outlets on page 5-6* and *Auxiliary Devices on page 7-15*.

Glove Box

The glove box is located on the passenger side of the instrument panel. Lift up on the lever to open it.

Front Storage

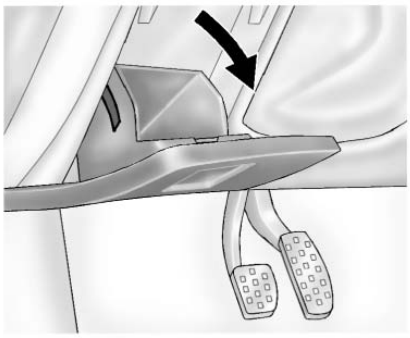

There is a storage compartment on the driver side of the instrument panel.

Downloaded from www.Manualslib.com manuals search engine

Center Console Storage

Open Storage

This vehicle may have a center console storage that is open.

Covered Storage

This vehicle may have a center console storage that is covered.

Slide the center console storage cover back to access the storage area.

Additional Storage Features

Cargo Cover

For vehicles with a cargo cover, it can be used to cover items in the cargo area.

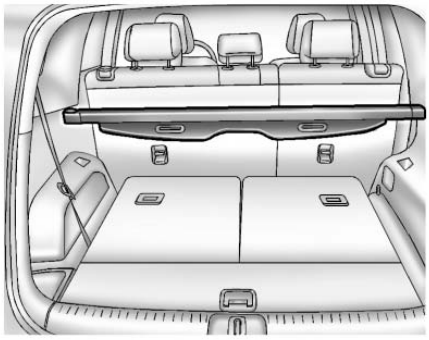

Install the Cargo Cover

1. Hold the cartridge so that the pull-out shade faces the rear of the vehicle.
2. Align one end of the cargo cover into the trim panel.

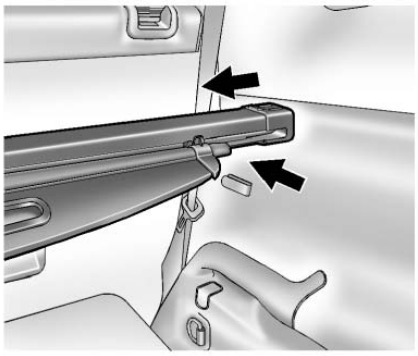

3. Push the opposite end of the cargo cover inward and place into the trim panel.
4. Unroll the shade toward the rear of the vehicle.

Downloaded from www.Manualslib.com manuals search engine

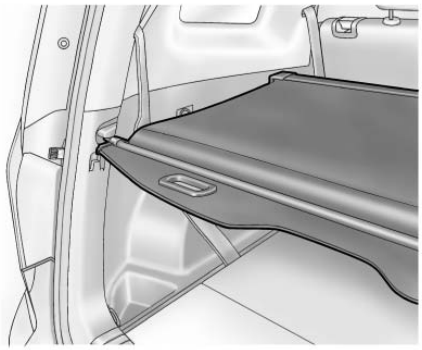

5. Insert the shade into the channels on both sides of the vehicle.

Remove the Cargo Cover

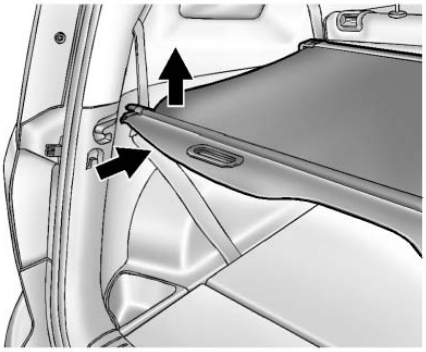

1. Lift the shade from the channels and carefully roll it back up.

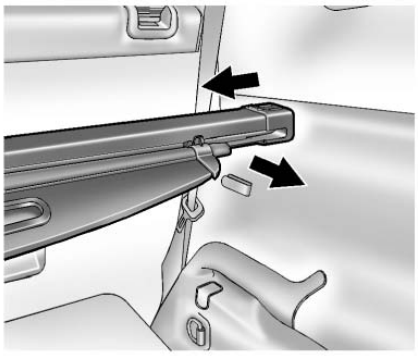

2. Push one end of the cargo cover inward and pull the cargo cover toward the rear of the vehicle.
3. Properly store the cargo cover.

⚠ WARNING

An unsecured cargo cover could strike people in a sudden stop or turn, or in a crash. Store the cargo cover securely or remove it from the vehicle.

Downloaded from www.Manualslib.com manuals search engine

Lashing Eyes

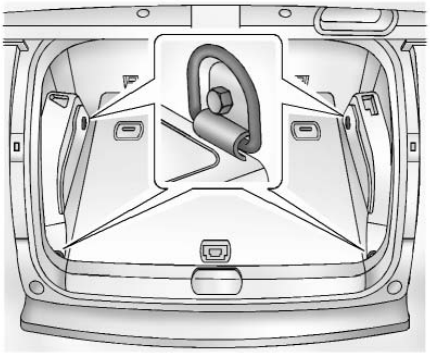

Four cargo lashing eyes are located in the rear compartment of the vehicle. The lashing eyes can be used to secure small loads.

Cargo Management System

This vehicle has a cargo management system located in the rear of the vehicle.

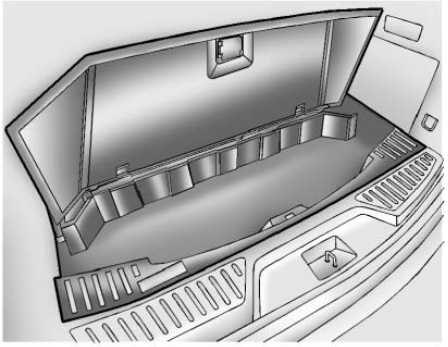

To remove the cargo management cover:

1. Open the cover. It remains open when lifted.
2. Pull the cover up making sure to unhook the hinges at the rear of the cover.

⚠ CAUTION

An improperly latched and closed cargo cover, or cargo cover left in the open position, could be thrown about the vehicle during a collision or sudden maneuver. Someone could be injured. Be sure to return the cover to the closed position and latch before driving. If the cover is removed, always store it outside of the vehicle. When it is replaced, always be sure that it is securely reattached.

3. Remove the cover from the vehicle and store outside of the vehicle.

Convenience Net

For vehicles with a convenience net, the convenience net is used to store small loads in the rear of the vehicle.

Downloaded from www.Manualslib.com manuals search engine

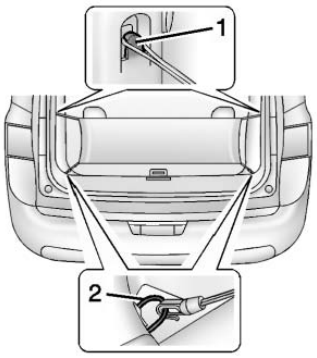

Hook the loops on the convenience net onto the hooks (1) and the hooks on the convenience net onto the lashing eyes (2).

The net should not be used to store heavy loads.

Roof Rack System

⚠ WARNING

If something is carried on top of the vehicle that is longer or wider than the roof rack — like paneling, plywood, or a mattress — the wind can catch it while the vehicle is being driven. The item being carried could be violently torn off, and this could cause a collision and damage the vehicle. Never carry something longer or wider than the roof rack on top of the vehicle unless using a GM certified accessory carrier.

This vehicle can be equipped with roof rack crossrails. GM certified crossrails can be purchased as an accessory. See your dealer for additional information.

Notice: **Loading cargo on the roof rack that weighs more than 100 kg (220 lbs) or hangs over the rear or sides of the vehicle may damage the vehicle. Load cargo so that it rests evenly between the crossrails, making sure to fasten cargo securely.**

To prevent damage or loss of cargo when driving, check to make sure the crossrails and cargo are securely fastened. Loading cargo on the roof rack will make the vehicle's center of gravity higher. Avoid high speeds, sudden starts, sharp turns, sudden braking, or abrupt maneuvers; otherwise it may result in loss of control. If driving for a long distance, on rough roads, or at high speeds, occasionally stop the vehicle to make sure the cargo remains in its place. Do not exceed the maximum vehicle capacity when loading the vehicle. For more information on vehicle capacity and loading, see *Vehicle Load Limits on page 9-9*.

Downloaded from www.Manualslib.com manuals search engine

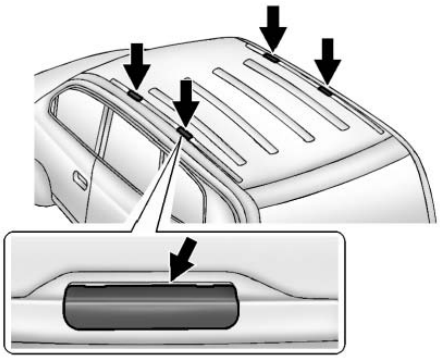

To attach the crossrails, remove the four covers on the roof.

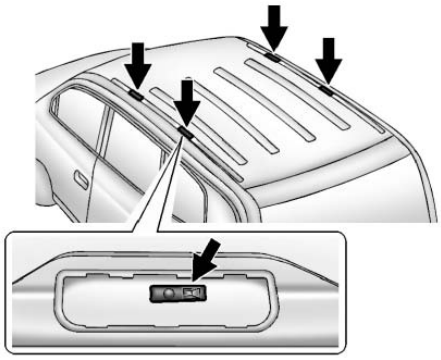

The crossrails can only be locked into the four places along the roof rack.

Follow the crossrail instructions to install.

Remove the crossrails and reinstall the covers when not in use.

Downloaded from www.Manualslib.com manuals search engine

Instruments and Controls

Controls

Steering Wheel Adjustment . . . 5-2
Steering Wheel Controls 5-3
Horn 5-3
Windshield Wiper/Washer 5-3
Rear Window Wiper/ Washer 5-4
Compass 5-5
Clock 5-5
Power Outlets 5-6
Cigarette Lighter 5-6
Ashtrays 5-7

Warning Lights, Gauges, and Indicators

Warning Lights, Gauges, and Indicators 5-7
Instrument Cluster 5-8
Speedometer 5-9
Odometer 5-9
Tachometer 5-9
Fuel Gauge 5-9
Engine Coolant Temperature Gauge 5-10
Safety Belt Reminders 5-10
Airbag Readiness Light 5-11
Charging System Light 5-11
Malfunction Indicator Lamp 5-12
Service Vehicle Soon Light 5-14
Brake System Warning Light 5-14
Antilock Brake System (ABS) Warning Light 5-15
Up-Shift Light 5-16
Power Steering Warning Light 5-16
Traction Off Light 5-16
StabiliTrak® OFF Light 5-17
Traction Control System (TCS)/StabiliTrak® Light 5-17
Tire Pressure Light 5-17
Engine Oil Pressure Light 5-18
Low Fuel Warning Light 5-18
Security Light 5-19
Reduced Engine Power Light 5-19
High-Beam On Light 5-19
Daytime Running Lamps (DRL) Indicator Light 5-20
Front Fog Lamp Light 5-20
Lamps On Reminder 5-20
Cruise Control Light 5-20
Door Ajar Light 5-21

Information Displays

Driver Information Center (DIC) 5-21

Vehicle Messages

Vehicle Messages 5-24
Battery Voltage and Charging Messages 5-25
Brake System Messages 5-25
Compass Messages 5-25
Cruise Control Messages 5-25
Door Ajar Messages 5-25
Engine Cooling System Messages 5-26
Engine Oil Messages 5-26
Engine Power Messages 5-27
Fuel System Messages 5-27
Key and Lock Messages 5-27
Lamp Messages 5-27
Object Detection System Messages 5-28
Ride Control System Messages 5-28
Airbag System Messages 5-28
Security Messages 5-28

Downloaded from www.Manualslib.com manuals search engine

Service Vehicle Messages . . . 5-28
Starting the Vehicle Messages 5-29
Tire Messages 5-29
Transmission Messages 5-29
Vehicle Reminder Messages 5-30

Vehicle Personalization
Vehicle Personalization 5-30

Controls

Steering Wheel Adjustment

The vehicle may have a tilt or tilt and telescoping steering wheel.

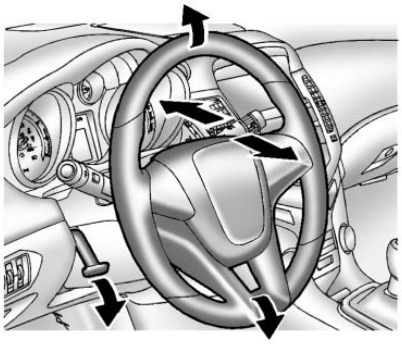

Tilt Steering Wheel

To adjust the steering wheel:

1. Pull the lever down.
2. Move the steering wheel up or down.
3. Push the lever up to lock the steering wheel in place.

Tilt and Telescoping Steering Wheel

To adjust the steering wheel:

1. Pull the lever down.
2. Move the steering wheel up or down.
3. Pull or push the steering wheel closer or away from you.
4. Push the lever up to lock the steering wheel in place.

Do not adjust the steering wheel while driving.

Downloaded from www.Manualslib.com manuals search engine

Steering Wheel Controls

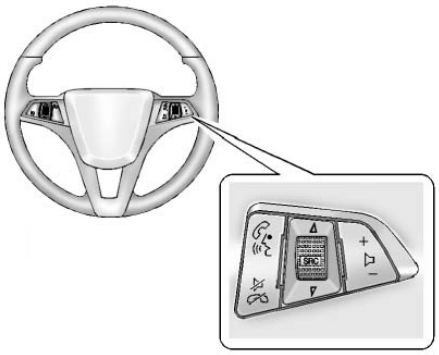

For vehicles with audio steering wheel controls, some audio controls can be adjusted at the steering wheel.

/ (Push to Talk): For vehicles with a Bluetooth and OnStar system, press to interact with those systems. See *Bluetooth (Overview) on page 7-18* or *Bluetooth (Voice Recognition) on page 7-23* or *Bluetooth (Infotainment Controls) on page 7-19* or *OnStar Overview on page 14-1*.

/ (Mute/End Call): Press to silence the vehicle speakers only. Press again to turn the sound on. For vehicles with OnStar or Bluetooth systems, press to reject an incoming call, or end a current call.

SRC (Rotary Control): Turn to select an audio source.

Press or to select the next or previous favorite radio station, CD, or MP3 track.

+ − (Volume): Press + to increase the volume. Press − to decrease the volume.

Horn

Press on the steering wheel pad to sound the horn.

Windshield Wiper/Washer

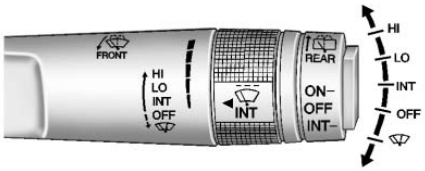

With the ignition in ACC/ACCESSORY or ON/RUN/START, move the windshield wiper lever to select the wiper speed.

HI: Use for fast wipes.

LO: Use for slow wipes.

Downloaded from www.Manualslib.com manuals search engine

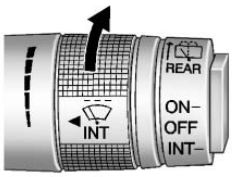

INT(Intermittent Wipes): Move the lever up to INT for intermittent wipes, then turn the INT band up for more frequent wipes or down for less frequent wipes.

OFF: Use to turn the wipers off.

(Mist): For a single wipe, briefly move the wiper lever down. For several wipes, hold the wiper lever down.

Clear snow and ice from the wiper blades before using them. If frozen to the windshield, carefully loosen or thaw them. Damaged blades should be replaced. See *Wiper Blade Replacement on page 10-23*.

Heavy snow or ice can overload the wiper motor.

Wipe Parking

If the ignition is changed to LOCK/OFF mode while the wipers are on LO, HI, or INT, they will immediately stop.

If the windshield wiper lever is then moved to off before the driver door is opened or within 10 minutes, the wipers will restart and move to the base of the windshield.

If the ignition is changed to LOCK/OFF while the wipers are performing wipes due to windshield washing, the wipers continue to run until they reach the base of the windshield.

Windshield Washer

Pull the windshield wiper lever toward you to spray windshield washer fluid and activate the wipers. The wipers will continue until the lever is released or the maximum wash time is reached. When the windshield wiper lever is released, additional wipes may occur depending on how long the windshield washer had been activated. See *Washer Fluid on page 10-18* for information on filling the windshield washer fluid reservoir.

⚠ WARNING

In freezing weather, do not use the washer until the windshield is warmed. Otherwise the washer fluid can form ice on the windshield, blocking your vision.

Rear Window Wiper/ Washer

The rear wiper controls are on the end of the windshield wiper lever.

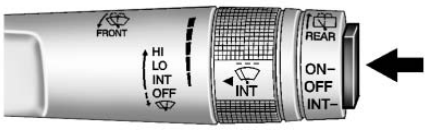

Downloaded from www.Manualslib.com manuals search engine

ON: Press the upper portion of the button for continuous rear window wipes.

OFF: The rear wiper turns off when the button is returned to the middle position.

INT (Intermittent Rear Wipes): Press the lower portion of the button to set a delay between wipes.

REAR **(Rear Washer):** Push the windshield wiper lever forward to spray washer fluid on the rear window. The lever automatically returns to its original position when released.

The windshield washer reservoir is used for the windshield and the rear window. Check the fluid level in the reservoir if either washer is not working. See *Washer Fluid on page 10-18*.

Compass

The vehicle may have a compass display in the Driver Information Center (DIC). The compass receives its heading and other information from the Global Positioning System (GPS) antenna, StabiliTrak, and vehicle speed information.

Avoid covering the GPS antenna, located on the roof, for long periods of time with objects that may interfere with the antenna's ability to receive a satellite signal. The compass system is designed to operate for a certain number of miles or degrees of turn before needing a signal from the GPS satellites. When the compass display shows CAL, drive the vehicle for a short distance in an open area where it can receive a GPS signal. The compass system will automatically determine when the GPS signal is restored and provide a heading again. See *Compass Messages on page 5-25* for more information on the messages that may be displayed for the compass.

Clock

The infotainment system controls are used to access the time and date settings through the menu system. See *Operation on page 7-4* for information about how to use the menu system.

Setting the Time

1. Press the CONFIG button and select Time Settings.
2. Select Set Time.
3. Turn the MENU knob to adjust the highlighted number.
4. Press the MENU knob to select the next number.
5. To save the time and return to the Time Settings menu, press the BACK button at any time or press the MENU knob after adjusting the minutes.

Downloaded from www.Manualslib.com manuals search engine

Setting the 12/24 Hour Format

1. Press the CONFIG button and select Time Settings.
2. Highlight 12/24 Hour Format.
3. Press the MENU knob to select the 12 hour or 24 hour display format.

Power Outlets

The accessory power outlets can be used to plug in electrical equipment, such as a cell phone or MP3 player.

The vehicle has three accessory power outlets: in front of the cupholders, at the rear of the center floor console and in the rear cargo area.

Remove the cover to access, and replace when not in use.

⚠ WARNING

Power is always supplied to the outlets. Do not leave electrical equipment plugged in when the vehicle is not in use because the vehicle could catch fire and cause injury or death.

Notice: **Leaving electrical equipment plugged in for an extended period of time while the vehicle is off will drain the battery. Always unplug electrical equipment when not in use and do not plug in equipment that exceeds the maximum 20 ampere rating.**

Certain accessory power plugs may not be compatible with the accessory power outlet and could overload vehicle or adapter fuses. If a problem is experienced, see your dealer.

When adding electrical equipment, be sure to follow the proper installation instructions included with the equipment. See *Add-On Electrical Equipment on page 9-47*.

Notice: **Hanging heavy equipment from the power outlet can cause damage not covered by the vehicle warranty. The power outlets are designed for accessory power plugs only, such as cell phone charge cords.**

Cigarette Lighter

For vehicles with a cigarette lighter, it is located in the center floor console.

The ignition must be turned to ACC/ACCESSORY or ON/RUN.

To activate the cigarette lighter, push it into the heating element and let go. When the lighter is ready it will pop back out.

Notice: **Holding a cigarette lighter in while it is heating does not let the lighter back away from the**

Downloaded from www.Manualslib.com manuals search engine

heating element when it is hot. Damage from overheating can occur to the lighter or heating element, or a fuse could be blown. Do not hold a cigarette lighter in while it is heating.

Ashtrays

The vehicle may have a removable ashtray.

The removable ashtray can be placed in the front cupholders. To open the removable ashtray, lift the lid of the ashtray. After using, close the lid.

Notice: **If papers, pins, or other flammable items are put in the ashtray, hot cigarettes or other smoking materials could ignite them and possibly damage the vehicle. Never put flammable items in the ashtray.**

Warning Lights, Gauges, and Indicators

Warning lights and gauges can signal that something is wrong before it becomes serious enough to cause an expensive repair or replacement. Paying attention to the warning lights and gauges could prevent injury.

Warning lights come on when there could be a problem with a vehicle function. Some warning lights come on briefly when the engine is started to indicate they are working.

Gauges can indicate when there could be a problem with a vehicle function. Often gauges and warning lights work together to indicate a problem with the vehicle.

When one of the warning lights comes on and stays on while driving, or when one of the gauges shows there may be a problem, check the section that explains what to do. Follow this manual's advice. Waiting to do repairs can be costly and even dangerous.

Downloaded from www.Manualslib.com manuals search engine

5-8 Instruments and Controls

Instrument Cluster

Automatic Transmission Cluster Shown

Downloaded from www.Manualslib.com manuals search engine

Speedometer

The speedometer shows the vehicle's speed in either kilometers per hour (km/h) or miles per hour (mph).

Odometer

The odometer shows how far the vehicle has been driven, in either kilometers or miles.

This vehicle has a tamper-resistant odometer. The digital odometer will read 99999.9 if it is turned back.

If the vehicle needs a new odometer installed, it must be set to the mileage total of the old odometer. If that is not possible, then it must be set at zero and a label must be put on the driver door to show the old mileage reading when the new odometer was installed.

Tachometer

The tachometer displays the engine speed in revolutions per minute (rpm).

Notice: **If the engine is operated with the tachometer in the shaded warning area, the vehicle could be damaged, and the damages would not be covered by the vehicle warranty. Do not operate the engine with the tachometer in the shaded warning area.**

Fuel Gauge

When the ignition is on, the fuel gauge tells you about how much fuel you have left in your tank.

An arrow on the fuel gauge indicates the side of the vehicle the fuel door is on.

A FUEL LEVEL LOW message may appear in the Driver Information Center (DIC). See *Fuel System Messages on page 5-27* for more information.

Here are four things that some owners ask about. None of these show a problem with your fuel gauge:

- At the service station, the fuel pump shuts off before the gauge reads full.
- It takes a little more or less fuel to fill up than the gauge indicated. For example, the gauge may have indicated the tank was half full, but it actually took a little more or less than half the tank's capacity to fill the tank.
- The gauge moves a little while turning a corner or speeding up.

Downloaded from www.Manualslib.com manuals search engine

- The gauge takes a few seconds to stabilize after the ignition is turned on, and will go back to empty when the ignition is turned off.

Engine Coolant Temperature Gauge

This gauge shows the engine coolant temperature.

If the indicator needle moves to the hot side of the gauge, the engine is too hot.

If the vehicle has been operated under normal driving conditions, pull off the road, stop the vehicle, and turn off the engine as soon as possible.

Safety Belt Reminders

Driver Safety Belt Reminder Light

There is a driver safety belt reminder light on the instrument panel cluster.

When the vehicle is started this light flashes and a chime may come on to remind the driver to fasten their safety belt. Then the light stays on solid until the belt is buckled. This cycle may continue several times if the driver remains or becomes unbuckled while the vehicle is moving.

If the driver safety belt is buckled, neither the light nor chime comes on.

Passenger Safety Belt Reminder Light

There is a passenger safety belt reminder light on the center stack.

When the vehicle is started this light flashes and a chime may come on to remind passengers to fasten their safety belt. Then the light stays on solid until the belt is buckled. This cycle continues several times if the passenger remains or becomes unbuckled while the vehicle is moving.

Downloaded from www.Manualslib.com manuals search engine

If the passenger safety belt is buckled, neither the chime nor the light comes on.

The front passenger safety belt warning light and chime may turn on if an object is put on the seat such as a briefcase, handbag, grocery bag, laptop or other electronic device. To turn off the warning light and/or chime, remove the object from the seat or buckle the safety belt.

Airbag Readiness Light

This light shows if there is an electrical problem with the airbag system. The system check includes the airbag sensor(s), the pretensioners, the airbag modules, the wiring, and the crash sensing and diagnostic module. For more information on the airbag system, see *Airbag System on page 3-24*.

The airbag readiness light comes on for several seconds when the vehicle is started. If the light does not come on then, have it fixed immediately.

⚠ WARNING

If the airbag readiness light stays on after the vehicle is started or comes on while driving, it means the airbag system might not be working properly. The airbags in the vehicle might not inflate in a crash, or they could even inflate without a crash. To help avoid injury, have the vehicle serviced right away.

If there is a problem with the airbag system, a Driver Information Center (DIC) message may also come on. See *Airbag System Messages on page 5-28*.

Charging System Light

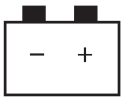

The charging system light comes on briefly when the ignition is turned on, but the engine is not running, as a check to show the light is working. The light turns off when the engine is started. If it does not, have the vehicle serviced by your dealer.

If the light stays on, or comes on while driving, there could be a problem with the electrical charging system. Have it checked by your dealer. Driving while this light is on could drain the battery.

Downloaded from www.Manualslib.com manuals search engine

If a short distance must be driven with the light on, be sure to turn off all accessories, such as the radio and air conditioner.

Malfunction Indicator Lamp

A computer system called OBD II (On-Board Diagnostics-Second Generation) monitors the operation of the vehicle to ensure emissions are at acceptable levels, helping to maintain a clean environment. The malfunction indicator lamp comes on when the vehicle is placed in ON/RUN, as a check to show it is working. If it does not, have the vehicle serviced by your dealer. See *Ignition Positions on page 9-14*.

If the malfunction indicator lamp comes on while the engine is running, this indicates that the OBD II system has detected a problem and diagnosis and service might be required.

Malfunctions often are indicated by the system before any problem is apparent. Being aware of the light can prevent more serious damage to the vehicle. This system also assists the service technician in correctly diagnosing any malfunction.

Notice: **If the vehicle is continually driven with this light on, the emission controls might not work as well, the vehicle fuel economy might not be as good, and the engine might not run as smoothly. This could lead to costly repairs that might not be covered by the vehicle warranty.**

Notice: **Modifications made to the engine, transmission, exhaust, intake, or fuel system of the vehicle or the replacement of the original tires with other than those of the same Tire Performance Criteria (TPC) can affect the vehicle's emission controls and can cause this light to come on. Modifications to these systems could lead to costly repairs not covered by the vehicle warranty. This could also result in a failure to pass a required Emission Inspection/ Maintenance test. See *Accessories and Modifications on page 10-3*.**

Downloaded from www.Manualslib.com manuals search engine

This light comes on during a malfunction in one of two ways:

Light Flashing: A misfire condition has been detected. A misfire increases vehicle emissions and could damage the emission control system on the vehicle. Diagnosis and service might be required.

To prevent more serious damage to the vehicle:

- Reduce vehicle speed.
- Avoid hard accelerations.
- Avoid steep uphill grades.
- If towing a trailer, reduce the amount of cargo being hauled as soon as it is possible.

If the light continues to flash, find a safe place to stop and park the vehicle. Turn the vehicle off, wait at least 10 seconds, and restart the engine. If the light is still flashing, follow the previous steps and see your dealer for service as soon as possible.

Light On Steady: An emission control system malfunction has been detected on the vehicle. Diagnosis and service might be required.

The following may correct an emission control system malfunction:

- Check that the fuel cap is fully installed. See *Filling the Tank on page 9-40*. The diagnostic system can determine if the fuel cap has been left off or improperly installed. A loose or missing fuel cap allows fuel to evaporate into the atmosphere. A few driving trips with the cap properly installed should turn the light off.
- Check that good quality fuel is used. Poor fuel quality causes the engine not to run as efficiently as designed and may cause stalling after start-up, stalling when the vehicle is changed into gear, misfiring, hesitation on acceleration, or stumbling on acceleration. These conditions might go away once the engine is warmed up.

If one or more of these conditions occurs, change the fuel brand used. It may require at least one full tank of the proper fuel to turn the light off.

See *Recommended Fuel on page 9-38*.

If none of the above have made the light turn off, your dealer can check the vehicle. The dealer has the proper test equipment and diagnostic tools to fix any mechanical or electrical problems that might have developed.

Emissions Inspection and Maintenance Programs

Depending on where you live, your vehicle may be required to participate in an emission control system inspection and maintenance program. For the inspection, the emission system test equipment will likely connect to the vehicle's Data Link Connector (DLC).

Downloaded from www.Manualslib.com manuals search engine

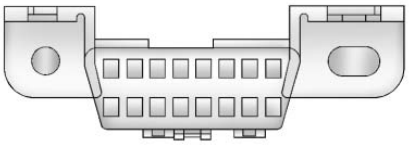

The DLC is under the instrument panel to the left of the steering wheel. See your dealer if assistance is needed.

The vehicle may not pass inspection if:

- The malfunction indicator lamp is on with the engine running, or if the light does not come on when the ignition is turned to ON/RUN while the engine is off. See your dealer for assistance in verifying proper operation of the malfunction indicator lamp.
- The OBD II (On-Board Diagnostics) system determines that critical emission control systems have not been completely diagnosed. The vehicle would be considered not ready for inspection. This can happen if the 12-volt battery has recently been replaced or run down. The diagnostic system is designed to evaluate critical emission control systems during normal driving. This can take several days of routine driving. If this has been done and the vehicle still does not pass the inspection for lack of OBD II system readiness, your dealer can prepare the vehicle for inspection.

Service Vehicle Soon Light

For vehicles with this light, it comes on if a condition exists that may require the vehicle to be taken in for service.

Vehicles with an uplevel cluster display a Driver Information Center (DIC) message.

See *Service Vehicle Messages on page 5-28* for more information.

If the light comes on, take the vehicle to your dealer for service as soon as possible.

Brake System Warning Light

The vehicle brake system consists of two hydraulic circuits. If one circuit is not working, the remaining circuit can still work to stop the vehicle. For normal braking performance, both circuits need to be working.

If the warning light comes on, there is a brake problem. Have the brake system inspected right away.

Downloaded from www.Manualslib.com manuals search engine

The brake system warning light should come on briefly as the engine is started. If it does not come on, have the vehicle serviced by your dealer.

⚠ WARNING

The brake system might not be working properly if the brake system warning light is on. Driving with the brake system warning light on can lead to a crash. If the light is still on after the vehicle has been pulled off the road and carefully stopped, have the vehicle towed for service.

If the light comes on while driving, a chime sounds. Pull off the road and stop. The pedal might be harder to push or go closer to the floor. It might also take longer to stop. If the light is still on, have the vehicle towed for service. See *Towing the Vehicle on page 10-75*.

Antilock Brake System (ABS) Warning Light

The Antilock Brake System (ABS) light comes on briefly when the engine is started.

If the light does not come on, have it fixed so it will be ready to warn if there is a problem.

If the ABS light comes on and stays on while driving, stop as soon as possible and turn the ignition off. Start the engine again to reset the system. If the light stays on after driving at a speed above 20 km/h (13 mph), see your dealer for service. A chime may also sound when the light comes on steady.

If the regular brake system warning light is not on, the vehicle still has brakes, but not antilock brakes. If the regular brake system warning light is also on, the vehicle does not have antilock brakes and there is a problem with the regular brakes. See *Brake System Warning Light on page 5-14*.

See *Brake System Messages on page 5-25* for all brake-related DIC messages.

Downloaded from www.Manualslib.com manuals search engine

Up-Shift Light

For manual transmission vehicles, there is an up-shift light that comes on in the lower DIC area. It shows when to shift to the next higher gear for best fuel economy.

See *Manual Transmission on page 9-24*.

Power Steering Warning Light

This light comes on briefly when the ignition is turned to ON/RUN as a check to show it is working.

If it does not come on have the vehicle serviced by your dealer.

If this light stays on, or comes on while driving, the system may not be working. If this happens, see your dealer for service.

Traction Off Light

This light comes on briefly while starting the engine. If it does not, have the vehicle serviced by your dealer. If the system is working normally, the indicator light then turns off.

The traction off light comes on when the Traction Control System (TCS) has been turned off by pressing and releasing the TCS/StabiliTrak button.

This light and the StabiliTrak OFF light come on when StabiliTrak is turned off.

If the TCS is off, wheel spin is not limited. Adjust driving accordingly.

Downloaded from www.Manualslib.com manuals search engine

See *Traction Control System (TCS) on page 9-28* and *StabiliTrak® System on page 9-29*.

StabiliTrak® OFF Light

This light comes on briefly while starting the engine. If it does not, have the vehicle serviced by your dealer.

This light comes on when the StabiliTrak system is turned off. If StabiliTrak is off, the Traction Control System (TCS) is also off.

If the TCS is off, the system does not assist in controlling the vehicle. Turn on the TCS and the StabiliTrak systems and the warning light turns off.

See *Traction Control System (TCS) on page 9-28* and *StabiliTrak® System on page 9-29*.

Traction Control System (TCS)/StabiliTrak® Light

The StabiliTrak or Traction Control System (TCS) indicator/warning light comes on briefly when the engine is started.

If the light does not come on, have the vehicle serviced by your dealer. If the system is working normally, the indicator light turns off.

If the light is on and not flashing, the TCS, and potentially the StabiliTrak system have been disabled. A DIC message may display. Check the DIC messages to determine which feature(s) is no longer functioning and whether the vehicle requires service.

If the indicator/warning light is on and flashing, the TCS and/or the StabiliTrak system is actively working.

See *StabiliTrak® System on page 9-29* and *Traction Control System (TCS) on page 9-28*.

Tire Pressure Light

For vehicles with the Tire Pressure Monitor System (TPMS), this light comes on briefly when the engine is started. It provides information about tire pressures and the TPMS.

Downloaded from www.Manualslib.com manuals search engine

When the Light Is On Steady

This indicates that one or more of the tires are significantly underinflated.

A Driver Information Center (DIC) tire pressure message may also display. See *Tire Messages on page 5-29*. Stop as soon as possible, and inflate the tires to the pressure value shown on the Tire and Loading Information label. See *Tire Pressure on page 10-43*.

When the Light Flashes First and Then Is On Steady

If the light flashes for about a minute and then stays on, there may be a problem with the TPMS. If the problem is not corrected, the light will come on at every ignition cycle. See *Tire Pressure Monitor Operation on page 10-45*.

Engine Oil Pressure Light

Notice: **Lack of proper engine oil maintenance can damage the engine. Driving with the engine oil low can also damage the engine. The repairs would not be covered by the vehicle warranty. Check the oil level as soon as possible. Add oil if required, but if the oil level is within the operating range and the oil pressure is still low, have the vehicle serviced. Always follow the maintenance schedule for changing engine oil.**

The oil pressure light should come on briefly as the engine is started. If it does not come on, have the vehicle serviced by your dealer.

If the light comes on and stays on, it means that oil is not flowing through the engine properly. The vehicle could be low on oil and might have some other system problem. See your dealer.

Low Fuel Warning Light

This light comes on for a few seconds when the ignition is turned on as a check to indicate it is working. If it does not come on, have it fixed.

The low fuel warning light comes on. The light turns off when fuel is added to the fuel tank.

A message may also display in the Driver Information Center (DIC).

See *Driver Information Center (DIC) on page 5-21* for more information.

Downloaded from www.Manualslib.com manuals search engine

Security Light

The immobilizer light should come on briefly as the engine is started. If it does not come on, have the vehicle serviced by your dealer. If the system is working normally, the indicator light turns off.

If the light stays on and the engine does not start, there could be a problem with the theft-deterrent system. See *Immobilizer Operation on page 2-10*.

Reduced Engine Power Light

The reduced engine power light should come on briefly as the engine is started. If it does not come on have the vehicle serviced by your dealer.

This light, along with the service engine soon light, displays when a noticeable reduction in the vehicle's performance occurs. Stop the vehicle and turn off the ignition. Wait for 10 seconds and restart the vehicle. This might correct the condition.

The vehicle can be driven at a reduced speed when the reduced engine power light is on but acceleration and speed might be reduced. The performance could be reduced until the next time the vehicle is driven. If this light stays on, see your dealer as soon as possible for diagnosis and repair.

High-Beam On Light

The high-beam on light comes on when the high-beam headlamps are in use.

See *Headlamp High/Low-Beam Changer on page 6-2* for more information.

Downloaded from www.Manualslib.com manuals search engine

Daytime Running Lamps (DRL) Indicator Light

This light turns on whenever the Daytime Running Lamps are in use.

See *Daytime Running Lamps (DRL) on page 6-2*.

Front Fog Lamp Light

For vehicles with front fog lamps, this light comes on when the front fog lamps are in use.

The light goes out when the front fog lamps are turned off. See *Front Fog Lamps on page 6-5* for more information.

Lamps On Reminder

The lamps on reminder light comes on when the exterior lamps are in use. See *Exterior Lamp Controls on page 6-1*.

Cruise Control Light

For vehicles with cruise control, the cruise control light is white when the cruise control is on and ready, and turns green when the cruise control is set and active.

The light turns off when the cruise control is turned off. See *Cruise Control on page 9-31*.

Downloaded from www.Manualslib.com manuals search engine

Door Ajar Light

For base level clusters this light comes on above the Driver Information Center (DIC). For uplevel clusters, this light comes on in the Driver Information Center (DIC) when a door is open or not securely latched.

Before driving, check that all doors are properly closed.

Information Displays

Driver Information Center (DIC)

The DIC displays information about your vehicle. It also displays warning messages if a system problem is detected. See *Vehicle Messages on page 5-24* for more information. All messages appear in the DIC display located in the center of the instrument panel cluster.

DIC Operation and Displays

The DIC has different displays which can be accessed by using the DIC buttons on the turn signal lever located on the left side of the steering wheel. The DIC displays trip, fuel, and warning messages if a system problem is detected.

DIC Buttons

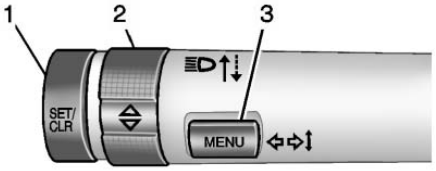

1. **SET/CLR:** Press to set or clear the menu item displayed.
2. △ / ▽ **(Thumbwheel):** Use to scroll through the menus. A marker will move across the bottom of the page as you scroll.
3. **MENU:** Press to display the Trip/Fuel menu and the Vehicle Information menu. This button is also used to return to or exit the last screen displayed on the DIC.

Downloaded from www.Manualslib.com manuals search engine

Trip/Fuel Menu Items

Press MENU on the turn signal lever until the Trip/Fuel Information menu displays. Use △ / ▽ to scroll through the menu items. Not all items are available on every vehicle. The following is a list of all possible menu items:

- Trip 1
- Trip 2
- Fuel Range
- Average Fuel Economy
- Instantaneous Fuel Economy
- Average Speed
- Fuel Used

Trip 1 and Trip 2

These displays show the current distance traveled, in either kilometers (km) or miles (mi), from the last reset for the trip odometer. Some models have one trip odometer and some have two. The trip odometer can be reset to zero by pressing and holding the SET/CLR button while the trip odometer display is showing.

Fuel Range

This displays the approximate distance the vehicle can be driven without refueling. The fuel range estimate is based on an average of the vehicle's fuel economy over recent driving history and the amount of fuel remaining in the fuel tank. On some models, this display is shown as ⛽ km (mi). Fuel range cannot be reset.

Average Fuel Economy

The Average Fuel Economy display shows the approximate average liters per 100 kilometers (L/100 km) or miles per gallon (mpg). This number is based on the number of L/100 km (mpg) recorded since the last time this menu item was reset. On some models, this display is shown as ∅ ⛽ L/100 km (mpg). Reset the average consumption by pressing SET/CLR when it is displayed.

Instantaneous Fuel Economy

The Instantaneous Fuel Economy display shows the current fuel economy in liters per 100 kilometers (L/100 km) or miles per gallon (mpg). This number reflects only the fuel economy that the vehicle has right now and changes frequently as driving conditions change. Unlike average fuel economy, this display cannot be reset.

Average Speed

This displays the average speed of the vehicle in kilometers per hour (km/h) or miles per hour (mph). This average is based on the various vehicle speeds recorded since the last reset. On some models, this display is shown as ∅ km/h (mph). Reset the average speed by pressing SET/CLR when it is displayed.

Downloaded from www.Manualslib.com manuals search engine

Fuel Used

This display shows the approximate liters (L) or gallons (gal) of fuel that have been used since last reset. The fuel used can be reset by pressing the SET/CLR button while the Fuel Used display is showing.

Vehicle Information Menu Items

Press MENU on the turn signal lever until the Vehicle Information menu is displayed. Use △ / ▽ to scroll through the menu items. Not all items are available on every vehicle. The following is a list of all of the possible menu items:

- Units
- Tire Pressure
- Remaining Oil Life
- Battery Voltage
- Blank Display

Units

Move △ / ▽ to change between metric or US when the Unit display is active. Press SET/CLR to confirm the setting. On some models, you will have to select 1, 2, or 3 for the Unit display. 1 is Imperial units, 2 is US units, and 3 is metric units. This will change the displays on the cluster and DIC to the type of measurements you select.

Tire Pressure

The display may show a vehicle with the approximate pressures of all four tires. Tire pressure is displayed in either kilopascal (kPa) or in pounds per square inch (psi). On some models, this display only allows for matching of the TPMS sensors. In this case, the display will show TIRE LEARN. See *Tire Pressure Monitor System on page 10-44* and *Tire Pressure Monitor Operation on page 10-45* for more information.

Remaining Oil Life

This display shows an estimate of the oil's remaining useful life. If REMAINING OIL LIFE 99% is displayed, that means 99% of the current oil life remains. On some models, this display is shown as %.

When the remaining oil life is low, the CHANGE ENGINE OIL SOON message, or code 82, will appear on the display. See *Engine Oil Messages on page 5-26* and “Vehicle Messages (Base Level)” following. The oil should be changed as soon as possible. See *Engine Oil on page 10-7*. In addition to the engine oil life system monitoring the oil life, additional maintenance is recommended in the Maintenance Schedule in this manual. See *Maintenance Schedule on page 11-2* for more information.

Downloaded from www.Manualslib.com manuals search engine

Remember, the Oil Life display must be reset after each oil change. It will not reset itself. Also, be careful not to reset the Oil Life display accidentally at any time other than when the oil has just been changed. It cannot be reset accurately until the next oil change. To reset the engine oil life system, press the SET/CLR button while the Oil Life display is active. See *Engine Oil Life System on page 10-9*.

Battery Voltage

This display, available on some vehicles, shows the current battery voltage. If the voltage is in the normal range, the value will display. For example, the display may read BATTERY VOLTAGE 15.0 VOLTS. The vehicle's charging system regulates voltage based on the state of the battery. The battery voltage can fluctuate while viewing this information on the DIC. This is normal. See *Charging System Light on page 5-11* for more information. If there is a problem with the battery charging system, the DIC will display a message. See *Battery Voltage and Charging Messages on page 5-25*.

Blank Display

This display shows no information.

Vehicle Messages

Messages displayed on the DIC indicate the status of the vehicle or some action that may be needed to correct a condition. Multiple messages may display one after the other.

The messages that do not require immediate action can be acknowledged and cleared by pressing SET/CLR. The messages that require immediate action cannot be cleared until that action is performed. All messages should be taken seriously and clearing the messages does not correct the problem.

The following are some of the vehicle messages that may be displayed depending on your vehicle content.

Downloaded from www.Manualslib.com manuals search engine

Battery Voltage and Charging Messages

BATTERY SAVER ACTIVE

This message displays when the vehicle has detected that the battery voltage is dropping beyond a reasonable point. The battery saver system starts reducing features of the vehicle that may be noticed. At the point that features are disabled, this message displays. Turn off unnecessary accessories to allow the battery to recharge.

LOW BATTERY

This message is displayed when the battery voltage is low. See *Battery on page 10-21*.

SERVICE BATTERY CHARGING SYSTEM

This message is displayed when there is a fault in the battery charging system. Take the vehicle to your dealer for service.

Brake System Messages

BRAKE FLUID LOW

This message is displayed when the brake fluid level is low. See *Brake Fluid on page 10-20*.

RELEASE PARKING BRAKE

This message is displayed as a reminder that the parking brake is on. Release it before you attempt to drive.

Compass Messages

CAL

This message is displayed when the compass needs to be calibrated. See *Compass on page 5-5*.

– –

Two dashes will be displayed if the compass needs service. See your dealer for service.

Cruise Control Messages

APPLY BRAKE BEFORE CRUISE

If this message displays when attempting to activate cruise control, apply the brake pedal and try again.

CRUISE SET TO XXX

This message displays when the cruise control is set and shows the speed it was set to. See *Cruise Control on page 9-31*.

Door Ajar Messages

DOOR(S) OPEN

A vehicle symbol will be displayed on the DIC showing which door is open along with this message. Close the door completely.

HOOD OPEN

This message will display when the hood is open. Close the hood completely.

Downloaded from www.Manualslib.com manuals search engine

REAR ACCESS OPEN

This message will display when the liftgate is open. Close the liftgate completely.

Engine Cooling System Messages

A/C OFF DUE TO HIGH ENGINE TEMP

This message displays when the engine coolant becomes hotter than the normal operating temperature. To avoid added strain on a hot engine, the air conditioning compressor automatically turns off. When the coolant temperature returns to normal, the air conditioning compressor turns back on. You can continue to drive the vehicle.

If this message continues to appear, have the system repaired by your dealer as soon as possible to avoid damage to the engine.

ENGINE OVERHEATED — IDLE ENGINE

This message displays when the engine coolant temperature is too hot. Stop and allow the vehicle to idle until it cools down.

ENGINE OVERHEATED — STOP ENGINE

This message displays and a continuous chime sounds if the engine cooling system reaches unsafe temperatures for operation. Stop and turn off the vehicle as soon as it is safe to do so to avoid severe damage. This message clears when the engine has cooled to a safe operating temperature.

HIGH COOLANT TEMPERATURE

This message displays if the coolant temperature is hot. See *Engine Overheating on page 10-17*.

Engine Oil Messages

CHANGE ENGINE OIL SOON

This message displays when the engine oil needs to be changed. When you change the engine oil, be sure to reset the Oil Life System. See *Engine Oil Life System on page 10-9* and *Driver Information Center (DIC) on page 5-21* for information on how to reset the system. See *Engine Oil on page 10-7* and *Maintenance Schedule on page 11-2* for more information.

OIL PRESSURE LOW — STOP ENGINE

This message displays if low oil pressure levels occur. Stop the vehicle as soon as safely possible and do not operate it until the cause of the low oil pressure has been corrected. Check the oil as soon as possible and have the vehicle serviced by your dealer.

Downloaded from www.Manualslib.com manuals search engine

Engine Power Messages

ENGINE POWER IS REDUCED

This message displays when the vehicle's engine power is reduced. Reduced engine power can affect the vehicle's ability to accelerate. If this message is on, but there is no reduction in performance, proceed to your destination. The performance may be reduced the next time the vehicle is driven. The vehicle may be driven at a reduced speed while this message is on, but maximum acceleration and speed may be reduced. Anytime this message stays on, the vehicle should be taken to your dealer for service as soon as possible.

Fuel System Messages

FUEL LEVEL LOW

This message displays when the vehicle is low on fuel. Refuel as soon as possible.

TIGHTEN GAS CAP

This message displays when the fuel cap is not on tight. Tighten the fuel cap.

Key and Lock Messages

REPLACE BATTERY IN REMOTE KEY

This message displays when the battery in the Remote Keyless Entry (RKE) transmitter needs to be replaced.

Lamp Messages

AUTOMATIC LIGHT CONTROL ON

This message is displayed when the automatic light control has been turned on. See *Automatic Headlamp System on page 6-3*.

AUTOMATIC LIGHT CONTROL OFF

This message is displayed when the automatic light control has been turned off. See *Automatic Headlamp System on page 6-3*.

XXX TURN INDICATOR FAILURE

When one of the turn signals is out, this message displays to show which bulb needs to be replaced. See *Bulb Replacement on page 10-25* and *Replacement Bulbs on page 10-30* for more information on turn signal bulb replacement.

TURN SIGNAL ON

This message is displayed if the turn signal has been left on. Turn off the turn signal.

Downloaded from www.Manualslib.com manuals search engine

Object Detection System Messages

PARK ASSIST OFF

This message displays when the park assist system has been turned off or when there is a temporary condition causing the system to be disabled. See *Ultrasonic Parking Assist on page 9-33*.

SERVICE PARK ASSIST

This message displays if there is a problem with the Ultrasonic Rear Parking Assist (URPA) system. Do not use this system to help you park. See *Ultrasonic Parking Assist on page 9-33*.

Ride Control System Messages

SERVICE TRACTION CONTROL

This message displays when there is a problem with the Traction Control System (TCS). See *Traction Control System (TCS) on page 9-28*.

SERVICE STABILITRAK

This message displays if there is a problem with the StabiliTrak system. See *StabiliTrak® System on page 9-29*.

Airbag System Messages

SERVICE AIRBAG

This message displays if there is a problem with the airbag system. Take the vehicle to your dealer for service.

Security Messages

THEFT ATTEMPTED

This message displays if the vehicle detects a tamper condition.

Service Vehicle Messages

SERVICE AC SYSTEM

This message displays if there is a problem with the air conditioning system. Take the vehicle to your dealer for service.

SERVICE POWER STEERING

This message displays if there is a problem with the power steering system. Take the vehicle to your dealer for service.

SERVICE STEERING COLUMN LOCK

This message displays if there is a problem with the steering column lock. Take the vehicle to your dealer for service.

Downloaded from www.Manualslib.com manuals search engine

SERVICE VEHICLE SOON

This message displays if there is a problem with the vehicle. Take the vehicle to your dealer for service.

Starting the Vehicle Messages

TURN STEERING WHEEL TURN KEY OFF THEN ON

This message displays when the steering column is locked. Try turning the steering wheel while turning the vehicle off and then back on to unlock the steering column.

TURN STEERING WHEEL START VEHICLE AGAIN

This message displays when you try to start the vehicle, but the column remains locked. Try turning the steering wheel while starting the vehicle to unlock the steering column. If the vehicle still does not start, turn the steering wheel the other way, and try starting the vehicle again.

Tire Messages

SERVICE TIRE MONITOR SYSTEM

This message displays if there is a problem with the Tire Pressure Monitor System (TPMS). See *Tire Pressure Monitor Operation on page 10-45* for more information.

TIRE LEARNING ACTIVE

This message displays when the system is learning new tires. See *Tire Pressure Monitor Operation on page 10-45* for more information.

TIRE PRESSURE LOW ADD AIR TO TIRE

On vehicles with the Tire Pressure Monitor System (TPMS), this message displays when the pressure in one or more of the vehicle's tires is low.

There is also an icon with the warning that will indicate the location of the low tire.

The low tire pressure warning light will also come on. See *Tire Pressure Light on page 5-17*.

If a tire pressure message appears on the DIC, stop as soon as you can. Inflate the tires by adding air until the tire pressure is equal to the values shown on the Tire and Loading Information label. See *Tires on page 10-37*, *Vehicle Load Limits on page 9-9*, and *Tire Pressure on page 10-43*.

You can receive more than one tire pressure message at a time. To read the other messages that may have been sent at the same time, press the SET/CLR button. The DIC also shows the tire pressure values. See *Driver Information Center (DIC) on page 5-21*.

Transmission Messages

SERVICE TRANSMISSION

This message displays if there is a problem with the transmission. See your dealer.

Downloaded from www.Manualslib.com manuals search engine

TRANSMISSION HOT — IDLE ENGINE

This message displays and a chime sounds if the transmission fluid in the vehicle gets hot. Driving with the transmission fluid temperature high can cause damage to the vehicle. Stop the vehicle and let it idle to allow the transmission to cool. This message clears when the fluid temperature reaches a safe level.

Vehicle Reminder Messages

ICE POSSIBLE DRIVE WITH CARE

This message displays when ice conditions are possible.

STEERING COLUMN IS LOCKED

This message displays when the steering column is locked.

Vehicle Personalization

The audio system controls are used to access the personalization menus for customizing vehicle features.

CONFIG (Configuration): Press to access the Configuration Settings menu.

MENU: Press the center of this knob to enter the menus and select menu items. Turn the knob to scroll through the menus.

BACK: Press to exit or move backward in a menu.

Entering the Personalization Menus

1. Press CONFIG to access the Configuration Settings menu.
2. Turn the MENU knob to highlight Vehicle Settings. Press the CONFIG button until Vehicle is highlighted on vehicles with a navigation system only.
3. Press the center of the MENU knob to select the Vehicle Settings menu. The vehicle must be in the run position.

The following list of menu items may be available:

- Climate and Air Quality
- Comfort and Convenience
- Collision/Detection Systems
- Languages
- Lighting
- Power Door Locks
- Remote Locking, Unlocking, Starting
- Return to Factory Settings

Turn the MENU knob to highlight the menu. Press the knob to select it. Each of the menus is detailed in the following information.

Downloaded from www.Manualslib.com manuals search engine

Climate and Air Quality

If equipped, select the Climate and Air Quality menu and the following will be displayed:

- Auto Fan Speed
- Air Quality Sensor
- Remote Start Auto Heat Seats
- Auto Defog
- Auto Rear Defog

Auto Fan Speed

This will allow you to select the automatic fan speed. This feature sets the climate control fan speed to maintain the interior temperature.

Press the MENU knob when Auto Fan Speed is highlighted to open the menu. Turn the knob to highlight High, Medium, or Low. Press the BACK button to confirm the selection and move back to the last menu.

Air Quality Sensor

This will allow you to select whether the system will operate at high or low sensitivity. Only vehicles with the automatic climate control will have this option.

Press the MENU knob when Air Quality Sensor is highlighted to open the menu. Turn the knob to highlight High Sensitivity or Low Sensitivity. Press the BACK button to confirm the selection and move back to the last menu.

Remote Start Auto Heat Seats

On vehicles with remote start and heated seats, the heated seats can be set to on or off.

Press the MENU knob when Remote Start Auto Heat Seats is highlighted to open the menu. Turn the knob to highlight On or Off. Press the BACK button to confirm the selection and move back to the last menu.

Auto Defog

When turned on and high humidity is detected, the climate control system may adjust to outside air supply and turn on the air conditioner or the heater. The fan speed may slightly increase to help prevent fogging. When high humidity is no longer detected, the system will return to its prior operation.

Press the MENU knob when Auto Defog is highlighted to open the menu. Turn the knob to highlight On or Off. Press the BACK button to confirm the selection and move back to the last menu.

Auto Rear Defog

When on, this feature turns on the rear defogger at vehicle start when the interior temperature is cold and fog is likely. The Auto Rear Defog function can be disabled by pressing . When off, the feature can be turned on by pressing .

Downloaded from www.Manualslib.com manuals search engine

See “Rear Window Defogger” under *Climate Control Systems on page 8-1* for more information.

Press the MENU knob when Auto Rear Defog is highlighted to open the menu. Turn the knob to highlight On or Off. Press the knob to confirm the selection and move back to the last menu.

Comfort and Convenience

Select the Comfort and Convenience menu and Chime Volume will be displayed.

Chime Volume

This allows selection of the chime volume level.

Press the MENU knob when Chime Volume is highlighted. Turn the knob to select Normal or High. Press the BACK button to confirm and go back to the last menu.

Collision/Detection Systems

If equipped, select the Collision/ Detection Systems menu and Park Assist will be displayed.

Park Assist

This allows the Ultrasonic Parking Assist feature, audible only, to be turned on or off.

Press the MENU knob when Park Assist is highlighted. Turn the knob to select On or Off. Press the knob to confirm and go back to the last menu.

Languages

Select the Language menu and the following will be displayed:

- English
- Francais
- Espanol

Turn the MENU knob to select the language. Press BACK to return to the last menu.

Lighting

Select the Lighting menu and the following will be displayed:

- Exit Lighting
- Vehicle Locator Lights

Exit Lighting

This allows the selection of how long the exterior lamps stay on when leaving the vehicle when it is dark outside.

Press the MENU knob when Exit Lighting is highlighted. Turn the knob to select Off, 30 Seconds, 1 Minute, or 2 Minutes. Press the BACK button to confirm and go back to the last menu.

Vehicle Locator Lights

This allows the vehicle locator lights to be turned on or off. When on, the headlamps and back-up lamps will flash when 🔓 on the Remote Keyless Entry (RKE) transmitter is pressed.

Press the MENU knob when Vehicle Locator Lights is highlighted to open the menu. Turn the MENU knob to highlight On or Off. Press MENU to select On or Off. Press the BACK button to confirm the selection and move back to the last menu.

Downloaded from www.Manualslib.com manuals search engine

Power Door Locks

Select Power Door Locks and the following will be displayed:

- Auto Door Unlock
- Delayed Door Lock
- Unlocked Door Anti Lock Out
- Auto Door Lock

Auto Door Unlock

This allows selection of which of the doors will automatically unlock when the vehicle is shifted into P (Park).

Press the MENU knob when Auto Door Unlock is highlighted. Turn the knob to select All Doors, Driver Door, or Off. Press the knob to confirm and go back to the last menu.

Delayed Door Lock

When on, this feature will delay the locking of the doors until five seconds after the last door is closed. You will hear three chimes to signal delayed locking is in use. Press either the power lock button or on the RKE transmitter twice to override the delayed locking feature and immediately lock all of the doors.

Press the MENU knob when Delayed Door Lock is highlighted to select On or Off. Press BACK to return to the last menu.

Unlocked Door Anti Lock Out

When on, all doors will lock. The driver door will then unlock if door locking is requested while the driver door is open and disable the Delayed Door Lock feature.

If Off is selected, the Delayed Door Lock feature may be enabled through an additional menu selection.

Press the MENU knob when Unlocked Door Anti Lock Out is highlighted to select On or Off. Press BACK to return to the last menu.

Auto Door Lock

This allows selection of which of the doors will automatically lock when the vehicle is shifted into P (Park).

Press the MENU knob when Auto Door Lock is highlighted. Turn the knob to select On or Off. Press the knob to confirm and go back to the last menu.

Remote Locking, Unlocking, Starting

Select Remote Locking, Unlocking, Starting and the following will be displayed (depending on the system):

- Remote Lock Feedback
- Door Unlock or Remote Door Unlock
- Remote Unlock Light Feedback
- Remote Start

Remote Lock Feedback

This allows selection of what type of feedback is given when locking the vehicle with the RKE transmitter.

Downloaded from www.Manualslib.com manuals search engine

Press the MENU knob when Remote Lock Feedback is highlighted. Turn the knob to select Lights and Horn, Lights Only, Horn Only, or Off. Press the knob to confirm and go back to the last menu.

Door Unlock or Remote Door Unlock

This allows selection of which doors will unlock when pressing 🔓 on the RKE transmitter.

Press the MENU knob when Door Unlock is highlighted. Turn the knob to select All Doors or Driver Door Only. When set to Driver Door Only, the driver door will unlock the first time 🔓 is pressed and all doors will unlock when the button is pressed a second time. When set to All Doors, all of the doors will unlock at the first press of 🔓. Press the knob to confirm and go back to the last menu.

Remote Unlock Light Feedback

If equipped, this allows selection of what type of feedback is given when unlocking the vehicle with the RKE transmitter.

Press the MENU knob when Remote Unlock Light Feedback is highlighted. Turn the knob to select On or Off. Press the knob to confirm and go back to the last menu.

Remote Start

If equipped, this allows Remote Start to be turned on or off.

Press the MENU knob when Remote Start is highlighted. Turn the knob to select On or Off. Press the knob to confirm and go back to the last menu.

Return to Factory Settings

Select Return to Factory Settings to return all vehicle personalization to the default settings. Turn the knob to select Yes or No. Press the knob to confirm and go back to the last menu.

Downloaded from www.Manualslib.com manuals search engine

Lighting

Exterior Lighting
Exterior Lamp Controls 6-1
Headlamp High/Low-Beam Changer 6-2
Flash-to-Pass 6-2
Daytime Running Lamps (DRL) 6-2
Automatic Headlamp System 6-3
Hazard Warning Flashers 6-4
Turn and Lane-Change Signals 6-4
Front Fog Lamps 6-5

Interior Lighting
Instrument Panel Illumination Control 6-6
Courtesy Lamps 6-6
Dome Lamps 6-6
Reading Lamps 6-6

Lighting Features
Entry Lighting 6-7
Exit Lighting 6-7
Battery Power Protection 6-7

Exterior Lighting

Exterior Lamp Controls

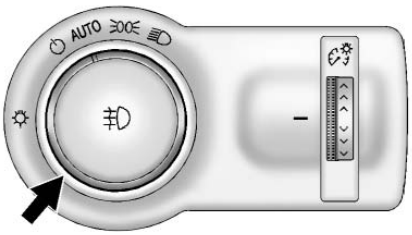

The exterior lamp control is on the instrument panel to the outboard side of the steering column.

There are four positions:

⏻ **(Off):** Briefly turn to this position to turn the automatic light control off or on again.

AUTO (Automatic): Turns the headlamps on automatically at normal brightness, together with the following:

- Parking Lamps
- Taillamps
- License Plate Lamps
- Instrument Panel Lights
- Sidemarker Lamps

(Parking Lamps): Turns the parking lamps on together with the following:

- Taillamps
- License Plate Lamps
- Instrument Panel Lights
- Sidemarker Lamps

Downloaded from www.Manualslib.com manuals search engine

(Headlamps): Turns the headlamps on together with the lamps listed below. A warning chime sounds if the driver door is opened when the ignition switch is off and the headlamps are on.

- Parking Lamps
- Taillamps
- License Plate Lamps
- Instrument Panel Lights
- Sidemarker Lamps

(Front Fog Lamps): For vehicles with fog lamps, press to turn the lamps on or off.

See *Front Fog Lamps on page 6-5*.

When the lights are on, will be lit. See *Lamps On Reminder on page 5-20*.

Headlamp High/ Low-Beam Changer

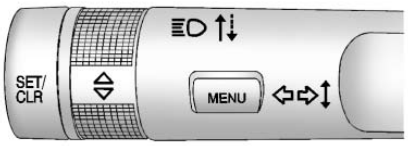

(Headlamp High/Low-Beam Changer): Push the turn signal lever away from you to turn the high beams on.

Push the lever again or pull the lever toward you to return to low beams.

This indicator light turns on in the instrument cluster when the high-beam headlamps are on.

Flash-to-Pass

To flash the high beams, pull the turn signal lever all the way toward you. Then release it.

Daytime Running Lamps (DRL)

Daytime Running Lamps (DRL) can make it easier for others to see the front of your vehicle during the day. Fully functional daytime running lamps are required on all vehicles first sold in Canada.

This indicator light turns on in the instrument cluster when the DRL are on.

A light sensor on top of the instrument panel makes the DRL work, so be sure it is not covered.

Downloaded from www.Manualslib.com manuals search engine

The DRL system makes the low-beam headlamps come on at a reduced brightness when the following conditions are met:

- The ignition is in the ON/RUN mode.
- The exterior lamps control is in AUTO.
- The engine is running.

When the DRL are on, only the low-beam headlamps, at a reduced level of brightness, will be on. The taillamps, sidemarker, instrument panel, and other lamps will not be on.

The headlamps automatically change from DRL to the regular headlamps depending on the darkness of the surroundings. The other lamps that come on with the headlamps will also come on.

When it is bright enough outside, the headlamps go off and the DRL come on.

To turn the DRL lamps off or on again, turn the exterior lamp control to ⏻ and then release. For vehicles first sold in Canada, the DRL lamps cannot be turned off.

Automatic Headlamp System

When it is dark enough outside and the exterior lamp control is in the automatic position, the headlamps come on automatically. See *Exterior Lamp Controls on page 6-1*.

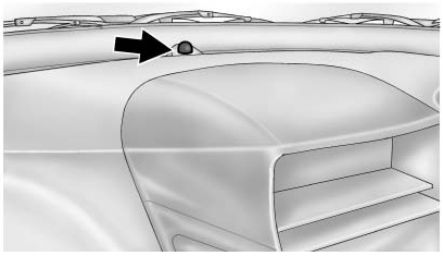

The vehicle has a light sensor on top of the instrument panel. Make sure it is not covered, or the headlamps will be on when they are not needed.

The system may also turn on the headlamps when driving through a parking garage or tunnel.

Downloaded from www.Manualslib.com manuals search engine

Lights On with Wipers

If the windshield wipers are activated in daylight with the engine on, and the exterior lamp control is in AUTO, the headlamps, parking lamps, and other exterior lamps come on. The transition time for the lamps coming on varies based on wiper speed. When the wipers are not operating, these lamps turn off. Move the exterior lamp control to ⏻ or ≡DO≡ to disable this feature.

Hazard Warning Flashers

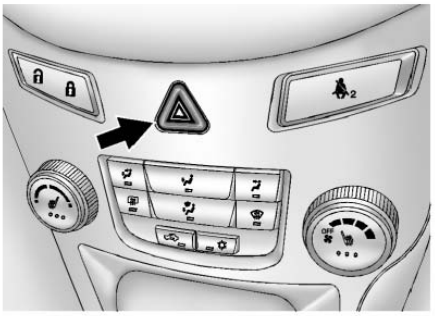

⚠ **(Hazard Warning Flashers):** Press and momentarily hold this button located on the instrument panel above the climate control system, to make the front and rear turn signal lamps flash on and off. This warns others that you are having trouble. Press and momentarily hold again to turn the flashers off.

Turn and Lane-Change Signals

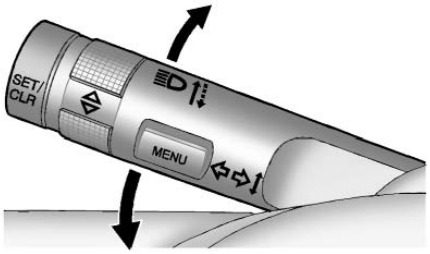

Move the lever all the way up or down to signal a turn.

An arrow on the instrument cluster will flash in the direction of the turn or lane change.

Raise or lower the lever until the arrow starts to flash to signal a lane change. The turn signal flashes three times.

Downloaded from www.Manualslib.com manuals search engine

The lever returns to its neutral position when it is released.

If after signaling a turn or lane change the arrow flashes rapidly or does not come on, a signal bulb may be burned out. Replace any burned out bulbs. If a bulb is not burned out, check the fuse. See *Fuses and Circuit Breakers on page 10-31* or *Bulb Replacement on page 10-25*.

Turn Signal On Chime

If the turn signal is left on for more than 1.2 km (0.75 mi), a chime will sound at each flash of the turn signal. To turn the chime off, move the turn signal lever to the neutral position.

Front Fog Lamps

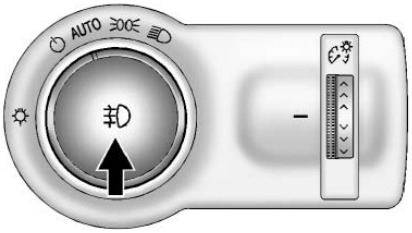

For vehicles with front fog lamps, the button is located on the outboard side of the instrument panel.

The ignition must be on to turn on the fog lamps.

(Fog Lamps): Press to turn the fog lamps on or off. An indicator light on the instrument cluster comes on when the fog lamps are on.

The fog lamps come on together with the parking lamps.

If the high-beam headlamps are turned on, the fog lamps will turn off. If the high-beam headlamps are turned off, the fog lamps will turn back on again.

Some localities have laws that require the headlamps to be on along with the fog lamps.

Downloaded from www.Manualslib.com manuals search engine

Interior Lighting

Instrument Panel Illumination Control

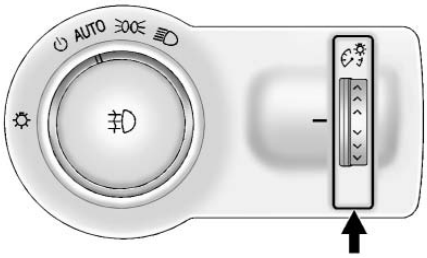

This feature controls the brightness of the instrument panel controls and infotainment display screen. The thumbwheel is to the left of the steering column on the instrument panel.

(Instrument Panel Brightness): Move the thumbwheel up or down and hold, to brighten or dim the instrument panel controls and infotainment display screen.

Courtesy Lamps

The courtesy lamps come on automatically when any door is opened and the dome lamp is in the position.

The reading lamps can be turned on or off independently of the automatic courtesy lamps when the doors are closed.

Dome Lamps

The dome lamp controls are located in the headliner.

(Dome Lamp Override): Press to turn the lamps off, even when a door is open.

(Door): Press to turn the lamps on automatically when a door is opened.

(On): Press to turn on the dome lamps.

Reading Lamps

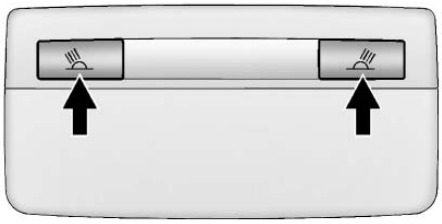

The reading lamps are located in the overhead console.

or : Press the button near each lamp to turn it on or off.

Downloaded from www.Manualslib.com manuals search engine

Lighting Features

Entry Lighting

The headlamps, parking lamps, and taillamps turn on briefly, when the Remote Keyless Entry (RKE) 🔓 is pressed. After about 30 seconds the exterior lamps turn off. Entry lighting can be disabled manually by changing the ignition out of the OFF position, or by pressing the RKE 🔒 button.

This feature can be changed. See *Vehicle Personalization on page 5-30*.

Exit Lighting

The headlamps, taillamps, parking lamps, back-up lamps, and license plate lamps come on at night, or in areas with limited lighting, when the driver door is opened. The dome lamps also come on when a door is opened after the ignition is changed to the OFF position.

The exterior lights and dome lamps remain on after the driver door is open for a set amount of time, then automatically turn off.

The exterior lights turn off immediately by turning the exterior lamps control off.

This feature can be changed. See *Vehicle Personalization on page 5-30*.

Battery Power Protection

The battery saver feature is designed to protect the vehicle's battery.

If some interior lamps are left on and the ignition is turned off, the battery rundown protection system automatically turns the lamp off after some time.

Downloaded from www.Manualslib.com manuals search engine

✍ NOTES

Downloaded from www.Manualslib.com manuals search engine

Infotainment System

Introduction
Infotainment 7-1
Theft-Deterrent Feature 7-2
Overview 7-3
Operation 7-4

Radio
AM-FM Radio 7-7
Satellite Radio 7-9
Radio Reception 7-12
Satellite Radio Antenna 7-12
Multi-Band Antenna 7-12

Audio Players
CD Player 7-13
Auxiliary Devices 7-15

Phone
Bluetooth (Overview) 7-18
Bluetooth (Infotainment Controls) 7-19
Bluetooth (Voice Recognition) 7-23

Trademarks and License Agreements
Trademarks and License Agreements 7-29

Introduction

Infotainment

Read the following pages to become familiar with the audio system's features.

⚠ WARNING

Taking your eyes off the road for extended periods could cause a crash resulting in injury or death to you or others. Do not give extended attention to infotainment tasks while driving.

This system provides access to many audio and non-audio listings.

Downloaded from www.Manualslib.com manuals search engine

To minimize taking your eyes off the road while driving, do the following while the vehicle is parked:

- Become familiar with the operation and controls of the audio system.
- Set up the tone, speaker adjustments, and preset radio stations.

For more information, see *Defensive Driving on page 9-2*.

Notice: **Contact your dealer before adding any equipment.**

Adding audio or communication equipment could interfere with the operation of the engine, radio, or other systems, and could damage them. Follow federal rules covering mobile radio and telephone equipment.

The vehicle has Retained Accessory Power (RAP). With RAP, the audio system can be played even after the ignition is turned off. See *Retained Accessory Power (RAP) on page 9-18* for more information.

Theft-Deterrent Feature

The theft-deterrent feature works by learning a portion of the Vehicle Identification Number (VIN) to the infotainment system. The infotainment system does not operate if it is stolen or moved to a different vehicle.

Downloaded from www.Manualslib.com manuals search engine

Overview

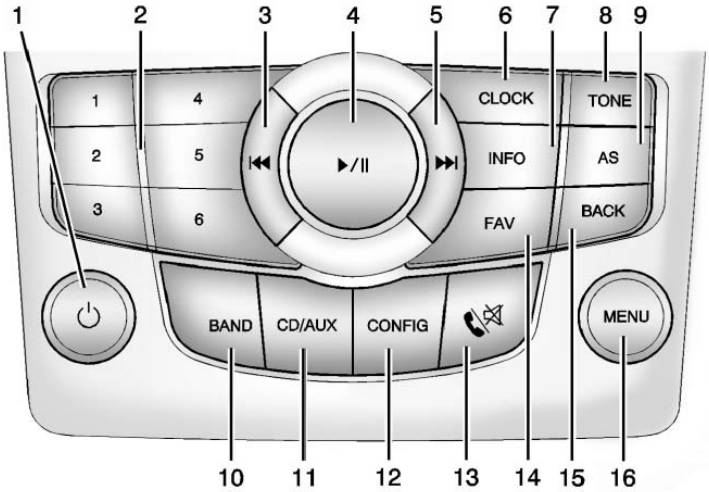

1. ⏻
   - Turns the system on or off and adjusts the volume.
2. Buttons 1 to 6
   - Radio: Saves and selects favorite stations.
3. ⏮
   - Radio: Seeks the previous station.
   - CD: Selects the previous track or rewinds within a track.
4. ▶/II
   - CD: Pauses playback, and stops playback.
5. ⏭
   - Radio: Seeks the next station.
   - CD: Selects the next track or fast forwards within a track.
6. CLOCK
   - Opens the clock menu.
7. INFO
   - Radio: Shows available information about the current station.
   - CD: Shows available information about the current track.
8. TONE
   - Opens the tone menu.

Downloaded from www.Manualslib.com manuals search engine

9. AS
   - Radio: Opens the autostore stations list.
10. BAND
   - Changes the band while listening to the radio.
   - Selects the radio when listening to a different audio source.
11. CD/AUX
   - Selects the CD player or an external audio source.
12. CONFIG
   - Opens the settings menu.
13. ☎ \ ⊠
   - Opens the phone main menu.
   - Mutes the audio system.
14. FAV
   - Radio: Opens the favorites list.
15. BACK
   - Menu: Moves one level back.
   - Character Input: Deletes the last character.
16. MENU
   - Turn to open menus, highlight menu items, or set numeric values while in a menu.
   - Press to select menu items.
   - Radio: Manually selects radio stations.
   - CD: Selects tracks.

Operation

Controls

The infotainment system is operated by using the pushbuttons, multifunction knobs, menus shown on the display, and steering wheel controls, if equipped.

Turning the System On or Off

⏻ **(Volume/Power):** Press to turn the system on and off.

Automatic Switch-Off

If the infotainment system has been turned on after the ignition is turned off, the system will turn off automatically after 10 minutes.

Volume Control

⏻ **(Volume/Power):** Turn to adjust the volume.

☎ **/ ⊠ (Phone/Mute):** Press ☎ / ⊠ to mute the infotainment system. Press ☎ / ⊠ again, or turn the ⏻ knob to cancel mute.

Menu System

The menu system appears on the display screen.

Controls

The MENU knob and the BACK button are used to navigate the menu system.

Downloaded from www.Manualslib.com manuals search engine

MENU Knob: Press to:

- Enter the menu system.
- Select or activate the highlighted menu option.
- Confirm a set value.
- Turn a system setting on or off.

Turn to:

- Highlight a menu option.
- Select a value.

BACK: Press to:

- Exit a menu.
- Return from a submenu screen to the previous menu screen.
- Delete the last character in a sequence.

Selecting a Menu Option

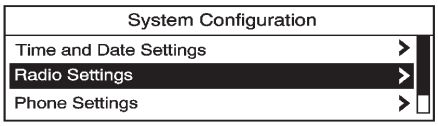

1. Turn the MENU knob to move the highlighted bar.
2. Press the MENU knob to select the highlighted option.

Submenus

An arrow on the right-hand edge of the menu indicates that it has a submenu with other options.

Activating a Setting

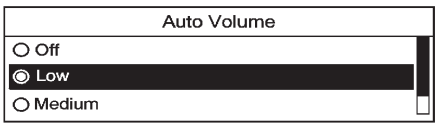

1. Turn the MENU knob to highlight the setting.
2. Press the MENU knob to activate the setting.

Setting a Value

1. Turn the MENU knob to change the current value of the setting.
2. Press the MENU knob to confirm the setting.

Turning a Function On or Off

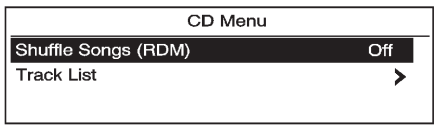

1. Turn the MENU knob to highlight the function.

Downloaded from www.Manualslib.com manuals search engine

2. Press the MENU knob to turn the function on or off.

Entering a Character Sequence

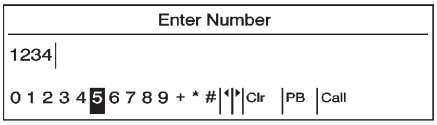

1. Turn the MENUL knob to highlight the character.
2. Press the MENU knob to select the character.

Press the BACK button to delete the last character in the sequence or press and hold to delete the entire character sequence.

Audio Settings

The audio settings can be set for each radio band and each audio player source.

To quickly reset an audio setting value to 0:

1. Press the TONE button.
2. Select the audio setting.
3. Press and hold the MENU button until the value changes to 0.

Press the BACK button to go back to the Tone Settings menu.

Adjusting the Treble, Midrange, and Bass

1. Press the TONE button.
2. Select Treble, Midrange, or Bass.
3. Select the value.

Press the BACK button to go back to the Tone Settings menu.

Adjusting the Fader and Balance

1. Press the TONE button.
2. Select Fader or Balance.
3. Select the value.

Press the BACK button to go back to the Tone Settings menu.

Adjusting the EQ (Equalizer)

For vehicles that have an equalizer:

1. Press the TONE button.
2. Select EQ presets.
3. Select the setting.

Press the BACK button to go back to the Tone Settings menu.

System Settings

Configuring the Number of Favorite Pages

To configure the number of available favorite pages:

1. Press the CONFIG button.
2. Select Radio Settings.
3. Select Radio Favorites.
4. Select the number of available favorite pages.
5. Press the BACK button to go back to the System Configuration menu.

Downloaded from www.Manualslib.com manuals search engine

Auto Volume

The auto volume feature automatically adjusts the radio volume to compensate for road and wind noise as the vehicle speeds up or slows down, so that the volume level is consistent.

The level of volume compensation can be selected, or the auto volume feature can be turned off.

1. Press the CONFIG button.
2. Select Radio Settings.
3. Select Auto Volume.
4. Select the setting.
5. Press the BACK button to go back to the System Configuration menu.

Maximum Startup Volume

The maximum volume played when the radio is first turned on can be set.

1. Press the CONFIG button.
2. Select Radio Settings.
3. Select Maximum Startup Volume.
4. Select the setting.
5. Press the BACK button to go back to the System Configuration menu.

Radio

AM-FM Radio

Control Buttons

The buttons used to control the radio are:

BAND: Press to turn the radio on and choose between AM, FM, and SiriusXM®, if equipped.

MENU: Turn to navigate the available menus and to search for stations.

INFO: Press to display additional information that may be available for the current song.

⏮ or ⏭ : Press to search for stations.

FAV: Press to open the favorites list and select the favorites page.

1 to 6: Press to select preset stations.

AS (Autostore): Press to open the autostore list.

Downloaded from www.Manualslib.com manuals search engine

RDS (Radio Data System)

The radio may have RDS. The RDS feature is available for use only on FM stations that broadcast RDS information. This feature only works when the information from the radio station is available. In rare cases, a radio station could broadcast incorrect information that causes the radio features to work improperly. If this happens, contact the radio station.

While the radio is tuned to an FM-RDS station, the station name or call letters display.

Radio Menus

Radio menus are available for AM and FM.

Turn the MENU knob to open the main radio menu for that band.

Selecting a Band

Press the BAND button to choose AM, FM, or SiriusXM, if equipped. The last station that was playing starts playing again.

Selecting a Station

Seek Tuning

If the radio station is not known:

Briefly press ⏮ or ⏭ to automatically search for the next available station. If a station is not found, the radio switches to a more sensitive search level. If a station still is not found, the frequency that was last active begins to play.

If the radio station is known:

Press and hold ⏮ or ⏭ until the station on the display is reached, then release the button.

Manual Tuning

Turn the MENU knob to select the frequency on the display.

Favorites List

1. Turn the MENU knob.
2. Select Favorites List.
3. Select the station.

Station List

1. Turn the MENU knob.
2. Select AM or FM Station List. All receivable stations in the current reception area are displayed. If a station list has not been created, an automatic station search is done.
3. Select the station.

Category Lists

Most stations that broadcast an RDS program type code specify the type of programming transmitted. Some stations change the program type code depending on the content. The system stores the RDS stations sorted by program type in the FM category list.

To search for a programming type determined by station:

1. Turn the MENU knob.
2. Select FM category list. A list of all programming types available displays.

Downloaded from www.Manualslib.com manuals search engine

3. Select the programming type. A list of stations that transmit programming of the selected type displays.
4. Select the station.

The category lists are updated when the station lists are updated.

Updating Station & Category Lists

If stations stored in the station list can no longer be received:

1. Turn the MENU knob.
2. Select Update AM or FM Station List. A station search will be completed and the first station in the updated list will play.

To cancel the station search, press the MENU knob.

Storing a Station as a Favorite

Stations from all bands can be stored in any order in the favorite pages.

Up to six stations can be stored in each favorite page and the number of available favorite pages can be set.

Storing Stations

To store the station to a position in the list, press the corresponding button 1 to 6 until a beep is heard.

Retrieving Stations

Press the FAV button to open a favorite page or to switch to another favorite page. Briefly press one of the 1 to 6 buttons to retrieve the station.

Autostore Stations

AS (Autostore): Autostore searches and stores six FM and six AM stations with the strongest signal. To use autostore:

1. Press BAND to select FM or AM.
2. Press AS for at least two seconds until a beep sounds. SEARCH displays on the radio, followed by the number of stations found.
3. The radio will automatically store the six strongest stations found as autostore presets.

Press the AS button to alternate between the autostore stations and favorites.

AS displays on the radio when using autostore presets.

Autostore does not delete previously stored favorite stations.

Autostore does not function with SiriusXM radio stations.

Satellite Radio

Vehicles with an SiriusXM® Satellite Radio tuner and a valid SiriusXM Satellite Radio subscription can receive SiriusXM programming.

SiriusXM Satellite Radio Service

SiriusXM is a satellite radio service based in the 48 contiguous United States and 10 Canadian provinces.

Downloaded from www.Manualslib.com manuals search engine

SiriusXM Satellite Radio has a wide variety of programming and commercial-free music, coast to coast, and in digital-quality sound. A service fee is required to receive the SiriusXM service. If SiriusXM Service needs to be reactivated, the radio will display "No Subscription Please Renew" on channel XM1. For more information, contact SiriusXM at www.siriusxm.com or call 1-866-635-2349 (U.S.) and www.xmradio.ca or call 1-877-209-0079 (Canada).

Control Buttons

The buttons used to control the SiriusXM radio are:

BAND: Press to turn the radio on and choose between AM, FM, and XM.

⏮ or ⏭ : Press to go to the previous or next channel.

FAV: Press to open the favorites list.

1 to 6: Press to select a favorite.

MENU: Turn to select a channel.

INFO: Press to display additional information that may be available about the current song.

▶/II (Play/Pause): Press to pause time shifted content, if equipped.

Selecting the XM Band

Press the BAND button to choose between the AM, FM, and XM bands. The last channel played in that band begins to play when that band is selected.

XM Categories

XM channels are organized in categories.

Removing or Adding Categories

Channels in a category that have been removed can still be accessed by using the ⏮ or ⏭ buttons, or the MENU knob.

To add or remove categories:

1. Press the CONFIG button.
2. Select Radio Settings.
3. Select XM Categories.
4. Turn the MENU knob to highlight the category.
5. Press the MENU knob to remove or add the category.

Selecting an XM Channel

XM channels can be selected by using ⏮, ⏭ , the MENU knob, or the menu system.

Selecting a Channel Using ⏮ or ⏭

- Press and release ⏮ or ⏭ to go to the previous or next channel.
- Press and hold ⏮ or ⏭ to scroll through the previous or next channel until the channel is reached.

Downloaded from www.Manualslib.com manuals search engine

Selecting a Channel Using the MENU Knob

To select an XM channel using the MENU knob:

Turn the MENU knob to highlight an XM channel. The channel is selected after a short delay.

To select a channel using the menu:

1. Turn the MENU knob and select Channel List.
2. Select the desired channel.

Selecting a Channel Using the Menu System

1. Turn the MENU knob.
2. Select XM Category List.
3. Select the category.
4. Select the channel.

Storing an SiriusXM Channel as a Favorite

Channels from all bands can be stored in any order in the favorite pages.

Up to six channels can be stored in each favorite page and the number of available favorite pages can be set.

Storing a Channel as a Favorite

To store the channel to a position in the list, press and hold the corresponding 1 to 6 button until the channel can be heard again.

Retrieving Channels

Press the FAV button to open a favorite page or to change to another favorite page. Briefly press one of the 1 to 6 buttons to retrieve the channel.

XM Messages

XL (Explicit Language Channels): These channels, or any others, can be blocked by request, by calling 1-866-635-2349 (U.S.), and 1-877-209-0079 (Canada).

XM Updating: The encryption code in the receiver is being updated. No action is required. This process should take no longer than 30 seconds.

Loading XM: The audio system is acquiring and processing audio and text data. No action is needed. This message should disappear shortly.

Channel Off Air: This channel is not currently in service. Tune in to another channel.

Channel Unauth: This channel is blocked or cannot be received with your SiriusXM Subscription package.

Channel Unavailable: This previously assigned channel is no longer assigned. Tune to another station.

No Artist Info: The system is working properly. No artist information is available at this time on this channel.

Downloaded from www.Manualslib.com manuals search engine

No Title Info: The system is working properly. No song title information is available at this time on this channel.

No CAT Info: The system is working properly. No category information is available at this time on this channel.

No Information: The system is working properly. No text or informational messages are available at this time on this channel.

No Subscription Please Renew: SiriusXM subscription needs to be reactivated. Contact SiriusXM at www.siriusxm.com or call 1-866-635-2349 (U.S.) and www.xmradio.ca or call 1-877-209-0079 (Canada).

No XM Signal: The system is working properly. The vehicle may be in a location where the SiriusXM signal is being blocked. When the vehicle is moved into an open area, the signal should return.

CAT Not Found: The system is working properly. There are no channels available for the selected category.

XM Radio ID: If tuned to channel 0, this message alternates with the SiriusXM Radio eight-digit radio ID label. This label is needed to activate the service.

Unknown: If this message is received when tuned to channel 0, there could be a receiver fault. Consult with your dealer.

Check Antenna: If this message does not clear within a short period of time, the receiver could have a fault. Consult with your dealer.

XM Not Available: If this message does not clear within a short period of time, the receiver could have a fault. Consult with your dealer.

Radio Reception

The theft-deterrent feature works by learning a portion of the Vehicle Identification Number (VIN) to the infotainment system. The infotainment system does not operate if it is stolen or moved to a different vehicle.

Satellite Radio Antenna

The SiriusXM Satellite Radio antenna is located on the roof of the vehicle. Keep the antenna clear of obstructions for clear radio reception.

If the vehicle has a sunroof, the performance of the XM system may be affected if the sunroof is open.

Multi-Band Antenna

The multi-band antenna is on the roof of the vehicle. The antenna is used for the AM-FM radio, OnStar, the SiriusXM Satellite Radio Service System, and GPS (Global Positioning System), if the vehicle has these features. Keep the antenna clear of obstructions for clear reception.

Downloaded from www.Manualslib.com manuals search engine

Audio Players

CD Player

The CD player can play audio CDs and MP3 CDs.

The CD player will not play 8 cm (3 in) CDs.

Care of CDs

Sound quality can be reduced due to disc quality, recording method, quality of the music recorded, and how the disc has been handled. Handle discs carefully and store them in their original cases or other protective cases away from direct sunlight and dust. If the bottom surface of a disc is damaged, the disc may not play properly or at all. Do not touch the bottom surface of a disc while handling it; this could damage the surface. Pick up discs by grasping the outer edges or the edge of the hole and the outer edge.

If the bottom surface of a disc is dirty, take a soft lint-free cloth, or dampen a clean soft cloth in a mild neutral detergent solution mixed with water, and clean it. Wipe the disc from the center to the outer edge.

Care of the CD Player

Do not add a label to a disc, as it could get caught in the CD player. If a label is needed, label the top of the recorded disc with a marking pen.

Do not use disc lens cleaners because they could contaminate the lens of the disc optics and damage the CD player.

Notice: **If a label is added to a CD, more than one CD is inserted into the slot at a time, or an attempt is made to play scratched or damaged CDs, the CD player could be damaged. While using the CD player, use only CDs in good condition without any label, load one CD at a time, and keep the CD player and the loading slot free of foreign materials, liquids, and debris.**

Control Buttons

The buttons used to control the CD player are:

CD/AUX: Press to use the CD player.

⏭ or ⏮ : Press to select tracks or to fast forward or rewind within a track.

INFO: Press to display additional information about the current track that may be available.

MENU: Turn to enter the menu.

SELECT: Press to select an item.

⏏ (Eject): Press to eject the disc.

Inserting a CD

With the printed side facing up, insert a disc into the CD slot until it is drawn in.

Removing a CD

Press ⏏

The disc is pushed out of the CD slot.

Downloaded from www.Manualslib.com manuals search engine

If the disc is not removed after it is ejected, it is pulled back in after a few seconds.

Playing a CD or MP3 CD

Press the CD/AUX button if there is a disc in the player; it begins playing.

Information about the disc and current track is shown on the display depending on the data stored.

Selecting a CD Track

Using the control buttons:

- Press ⏮ or ⏭ to select the previous or next track.

Using the CD Menu:

1. Turn the MENU knob.
2. Select Tracks list.
3. Select the track.

Playing Tracks in Random Order

Turn the MENU knob and then set Shuffle Songs to On.

Fast Forward and Rewind

Press and hold ⏭ or ⏮ to fast forward or rewind within the current track.

Selecting an MP3 Track

Using the control buttons:

- Press ⏮ or ⏭ to select the previous or next track.

Using the CD Menu:

1. Turn the MENU knob.
2. Select Playlists/Folders.
3. Select the playlist or folder.
4. Select the track.

Searching for MP3 Tracks

The search feature may take some time to display the information after reading the disc due to the amount of information stored on the disc. FM automatically plays while the disc is being read.

Tracks can be searched by:

- Playlists
- Artists
- Albums
- Song Titles
- Genres
- Folder View

To search for tracks:

1. Turn the MENU knob.
2. Select Search.
3. Select: Playlists, Artists, Albums, Song Titles, Genres, or Folder View.
4. Select the track.

Downloaded from www.Manualslib.com manuals search engine

Auxiliary Devices

The optional AUX input allows portable devices to connect to the vehicle using the 3.5 mm (1/8 in) auxiliary jack or USB port.

Portable devices are controlled by using the menu system described in *Operation on page 7-4*.

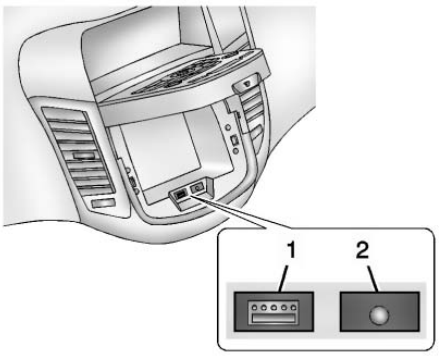

1. USB Port
2. 3.5 mm Auxiliary Input Jack

The USB/AUX input port is located in the center stack behind the radio.

3.5 mm Jack

Connect a 3.5 mm (1/8 in) cable to the auxiliary input jack to use a portable audio player.

Playback of an audio device that is connected to the 3.5 mm jack can only be controlled using the controls on the device.

Adjusting the Volume

Turn the ⏻ knob to adjust the volume of the infotainment system after the volume level has been set on the portable audio device.

USB Port

For vehicles with a USB port, the following devices may be connected and controlled by the infotainment system.

- iPods
- PlaysForSure Devices (PFDs)
- USB Drives
- Zunes™

Not all iPods, PFDs, USB drives, and Zunes are compatible with the infotainment system. Devices are also charged while plugged into the USB port.

Connecting and Controlling an iPod™

Not all iPods can be controlled by the infotainment system.

Connecting an iPod

Connect the iPod to the USB port.

Searching for a Track

Tracks that are found can be searched for by:

- Playlists
- Artists
- Albums
- Song Titles
- Podcasts
- Genres
- Audiobooks
- Composers

Downloaded from www.Manualslib.com manuals search engine

To search for tracks:

1. Turn the MENU knob.
2. Select Search.
3. Select: Playlists, Artists, Albums, Song Titles, Podcasts, Genres, Audiobooks, or Composers.
4. Select the track.

Shuffle

Turn the MENU knob and set Shuffle Songs (Random) to On or Off, then press the BACK button to return to the main screen.

On: Plays tracks in the current folder in random order.

Off: Plays tracks in the current folder in sequential order.

Repeat

Turn the MENU knob and set Repeat to On or Off, then press the BACK button to return to the main screen.

On: Repeats the current track.

Off: Starts playback from the beginning of the current track after the last track finishes.

Connecting and Controlling a PlaysForSure Device (PFD) or Zune™

Connecting a PFD or Zune

Connect the PFD or Zune to the USB port.

Searching for a Track

Tracks can be searched for by:

- Playlists
- Artists
- Albums
- Song Titles
- Podcasts
- Genres

To search for tracks:

1. Turn the MENU knob.
2. Select Search.
3. Select: Playlists, Artists, Albums, Song Titles, Podcasts, or Genres.
4. Select the track.

Shuffle Functionality

Turn the MENU knob and set Shuffle Songs (Random) to On or Off.

On: Plays current tracks in random order.

Off: Plays current tracks in sequential order.

Repeat Functionality

Turn the MENU knob and set Repeat to On or Off.

Repeat On: Repeats the current track.

Repeat Off: Starts playback from the beginning of the current track after the last track finishes.

Downloaded from www.Manualslib.com manuals search engine

Connecting and Controlling a USB Drive

The infotainment system can only play back .mp3 and .wma files from a USB drive.

Only the first 10,000 songs are recognized on the device.

When a device is not supported, the message “No supported data found. You can safely disconnect the device” appears.

Connecting a USB Drive

Connect the USB drive to the USB port.

Searching for a Track

It is normal for the search feature to take some time to display the information after reading the device due to the amount of information stored.

Files that do not have any meta data stored in the ID3 tag display as Unknown.

Tracks can be searched for by:

- Playlists*
- Artists
- Albums
- Song Titles
- Genres
- Folder View

*This only displays if a playlist is found on the device.

To search for tracks:

1. Turn the MENU knob.
2. Select Search.
3. Select: Playlists, Artists, Albums, Song Titles, Genres, or Folder View.
4. Select the track.

Shuffle Functionality

Turn the MENU knob and set Shuffle Songs (Random) to On or Off.

On: Plays current tracks in random order.

Off: Plays current tracks in sequential order.

Repeat Functionality

Turn the MENU knob and set Repeat to On or Off.

Repeat On: Repeats the current track.

Repeat Off: Starts playback from the beginning of the current track after the last track finishes.

Downloaded from www.Manualslib.com manuals search engine

Phone

Bluetooth (Overview)

For vehicles equipped with Bluetooth capability, the system can interact with many cell phones, allowing:

- Placement and receipt of calls in a hands-free mode.
- Sharing of the cell phone's address book or contact list with the vehicle.

To minimize driver distraction, before driving, and with the vehicle parked:

- Become familiar with the features of the cell phone. Organize the phone book and contact lists clearly and delete duplicate or rarely used entries. If possible, program speed dial or other shortcuts.
- Review the controls and operation of the infotainment system.
- Pair cell phone(s) to the vehicle. The system may not work with all cell phones. See "Pairing" in this section for more information.
- If the cell phone has voice dialing capability, learn to use that feature to access the address book or contact list. See "Voice Pass-Thru" in this section for more information.
- See "Storing and Deleting Phone Numbers" in this section for more information.

⚠ WARNING

When using a cell phone, it can be distracting to look too long or too often at the screen of the phone or the infotainment (navigation) system. Taking your eyes off the road too long or too often could cause a crash resulting in injury or death. Focus your attention on driving.

Vehicles with a Bluetooth system can use a Bluetooth-capable cell phone with a Hands-Free Profile to make and receive phone calls. The infotainment system and voice recognition are used to control the system. The system can be used while in ON/RUN or ACC/ACCESSORY. The range of the Bluetooth system can be up to 9.1 m (30 ft). Not all phones support all functions and not all phones work with the Bluetooth system. See www.gm.com/bluetooth for more information about compatible phones.

Bluetooth Controls

Use the buttons located on the infotainment system and the steering wheel to operate the Bluetooth system.

Steering Wheel Controls

/ (Push To Talk): Press to answer incoming calls, confirm system information, and start voice recognition.

Downloaded from www.Manualslib.com manuals search engine

/ (End Call/Mute): Press to end a call, reject a call, or cancel an operation.

Infotainment System Controls

For information about how to navigate the menu system using the infotainment controls, see *Operation on page 7-4*.

\ (Phone): Press to enter the Phone main menu.

Voice Recognition

The voice recognition system uses commands to control the system and dial phone numbers.

Noise: The system may not recognize voice commands if there is too much background noise.

When to Speak: A tone sounds to indicate that the system is ready for a voice command. Wait for the tone and then speak.

How to Speak: Speak clearly in a calm and natural voice.

Audio System

When using the Bluetooth system, sound comes through the vehicle's front audio system speakers and overrides the audio system. Use the VOL/ ⏻ knob during a call to change the volume level. The adjusted volume level remains in memory for later calls. The system maintains a minimum volume level.

Other Information

The Bluetooth® word mark and logos are owned by the Bluetooth® SIG, Inc. and any use of such marks by General Motors is under license. Other trademarks and trade names are those of their respective owners.

See *Radio Frequency Statement on page 13-15* for information regarding Part 15 of the Federal Communications Commission (FCC) rules and Industry Canada Standards RSS-GEN/210/220/310.

Bluetooth (Infotainment Controls)

For information about how to navigate the menu system using the infotainment controls, see *Operation on page 7-4*.

Pairing

A Bluetooth-enabled cell phone must be paired to the Bluetooth system and then connected to the vehicle before it can be used. See your cell phone manufacturer's user guide for Bluetooth functions before pairing the cell phone. If a Bluetooth phone is not connected, calls will be made using OnStar Hands-Free Calling, if available. See *OnStar Overview on page 14-1* for more information.

Pairing Information

- A Bluetooth phone with MP3 capability cannot be paired to the vehicle as a phone and an MP3 player at the same time.

Downloaded from www.Manualslib.com manuals search engine

- Up to five cell phones can be paired to the Bluetooth system.
- The pairing process is disabled when the vehicle is moving.
- Pairing only needs to be completed once, unless the pairing information on the cell phone changes or the cell phone is deleted from the system.
- Only one paired cell phone can be connected to the Bluetooth system at a time.
- If multiple paired cell phones are within range of the system, the system connects to the first available paired cell phone in the order that they were first paired to the system. To link to a different paired phone, see “Linking to a Different Phone” later in this section.

Pairing a Phone

1. Press the CONFIG button.
2. Select Phone Settings.
3. Select Bluetooth.
4. Select Pair Device (Phone). A four-digit Personal Identification Number (PIN) appears on the display. The PIN is used in Step 6.
5. Start the pairing process on the cell phone to be paired to the vehicle. See the cell phone manufacturer's user guide for information on this process.
6. Locate the device named “Your Vehicle” in the list on the cell phone. Follow the instructions on the cell phone to enter the PIN provided in Step 4. After the PIN is successfully entered, the system prompts you to provide a name for the paired cell phone. This name will be used to indicate which phones are paired and connected to the vehicle. The system responds with “<Phone name> has been successfully paired” after the pairing process is complete.
7. Repeat Steps 1 through 6 to pair additional phones.

Listing All Paired and Connected Phones

1. Press the CONFIG button.
2. Select Phone Settings.
3. Select Bluetooth.
4. Select Device List.

Deleting a Paired Phone

1. Press the CONFIG button.
2. Select Phone Settings.
3. Select Bluetooth.
4. Select Device List.
5. Select the phone to delete and follow the on screen prompts.

Linking to a Different Phone

To link to a different phone, the new phone must be in the vehicle and available to be connected to the Bluetooth system before the process is started.

1. Press the CONFIG button.
2. Select Phone Settings.
3. Select Bluetooth.

Downloaded from www.Manualslib.com manuals search engine

4. Select Device List.
5. Select the new phone to link to and follow the on screen prompts.

   If delete is selected, the highlighted phone will be deleted.

Making a Call Using Phone Book

For cell phones that support the phone book feature, the Bluetooth system can use the contacts stored on your cell phone to make calls. See your cell phone's owner's guide or contact your wireless provider to find out if this feature is supported by your phone.

When a cell phone supports the phone book feature, the Phone Book and Call Lists menus are automatically available.

The Phone Book menu allows you to access the phone book stored in the cell phone to make a call.

The Call Lists menu allows you to access the phone numbers from the Incoming Calls, Outgoing Calls, and Missed Calls menus on your cell phone to make a call.

To make a call using the Phone Book menu:

1. Press ☎ \ ☒.
2. Select Phone Book.
3. Search through the list by selecting the letter group the phone book entry begins with, or press the MENU button to scroll through the entire list of names/numbers in the phone book.
4. Select the name or number you want to call.

To make a call using the Call Lists menu:

1. Press ☎ \ ☒.
2. Select Call Lists.
3. Select the Incoming Calls, Outgoing Calls, or Missed Calls list.
4. Select the name or number you want to call.

Making a Call

To make a call:

1. Press ☎ \ ☒.
2. Enter the character sequence. See “Entering a Character Sequence” in *Operation on page 7-4*.
3. Select Call to start dialing the number.

Accepting or Declining a Call

When an incoming call is received, the infotainment system mutes and a ring tone is heard in the vehicle.

Accepting a Call

Turn the MENU knob to “Answer” and press the MENU knob to accept the call.

Downloaded from www.Manualslib.com manuals search engine

Declining a Call

Turn the MENU knob to “Decline” and press the MENU knob to decline the call.

Call Waiting

Call waiting must be supported on the Bluetooth phone and enabled by the wireless service carrier to work.

Accepting a Call

Turn the MENU knob to “Answer” and press the MENU knob to accept the call.

Declining a Call

Turn the MENU knob to “Decline” and press the MENU knob to decline the call.

Switching Between Calls (Call Waiting Calls Only)

To switch between calls:

1. Turn or press the MENU knob.
2. Select Switch Call from the menu.

Conference Calling

Conference calling and three-way calling must be supported on the Bluetooth phone and enabled by the wireless service carrier to work.

To start a conference while in a current call:

1. Turn or press the MENU knob.
2. Select Enter Number.
3. Enter the character sequence then select Call. See “Entering a Character Sequence” in *Operation on page 7-4*.
4. After the call has been placed, turn or press the MENU knob and choose Merge Calls.
5. To add more callers to the conference call, repeat Steps 1 through 4. The number of callers that can be added is limited by your wireless service carrier.

Ending a Call

Turn or press the MENU knob and select Hang Up.

Muting a Call

To Mute a Call

Turn or press the MENU knob and select Mute Call.

To Cancel Mute

Turn or press the MENU knob and select Mute Call.

Dual Tone Multi-Frequency (DTMF) Tones

The in-vehicle Bluetooth system can send numbers during a call. This is used when calling a menu-driven phone system.

1. Turn or press the MENU knob and select Enter Number.
2. Enter the character sequence. See “Entering a Character Sequence” in *Operation on page 7-4* for more information.

Downloaded from www.Manualslib.com manuals search engine

Bluetooth (Voice Recognition)

Using Voice Recognition

To use voice recognition, press the ✆ / button located on the steering wheel. Use the commands below for the various voice features. For additional information, say “Help” while you are in a voice recognition menu.

Pairing

A Bluetooth-enabled cell phone must be paired to the Bluetooth system and then connected to the vehicle before it can be used. See your cell phone manufacturer's user guide for Bluetooth functions before pairing the cell phone. If a Bluetooth phone is not connected, calls will be made using OnStar Hands-Free Calling, if available. See *OnStar Overview on page 14-1* for more information.

Pairing Information

- A Bluetooth phone with MP3 capability cannot be paired to the vehicle as a phone and an MP3 player at the same time.
- Up to five cell phones can be paired to the Bluetooth system.
- The pairing process is disabled when the vehicle is moving.
- Pairing only needs to be completed once, unless the pairing information on the cell phone changes or the cell phone is deleted from the system.
- Only one paired cell phone can be connected to the Bluetooth system at a time.
- If multiple paired cell phones are within range of the system, the system connects to the first available paired cell phone in the order that they were first paired to the system. To link to a different paired phone, see “Linking to a Different Phone” later in this section.

Pairing a Phone

1. Press ✆ / . The system responds “Ready,” followed by a tone.
2. Say “Bluetooth.”
3. Say “Pair.” The system responds with instructions and a four-digit Personal Identification Number (PIN). The PIN is used in Step 5.
4. Start the pairing process on the cell phone that you want to pair. For help with this process, see your cell phone manufacturer's user guide.
5. Locate the device named “Your Vehicle” in the list on the cell phone. Follow the instructions on the cell phone to enter the PIN provided in Step 3. After the PIN is successfully entered, the system prompts you to provide a name for the paired cell phone. This name will be used to indicate which phones are paired and connected to the vehicle. The system responds

Downloaded from www.Manualslib.com manuals search engine

with “<Phone name> has been successfully paired” after the pairing process is complete.

6. Repeat Steps 1 through 5 to pair additional phones.

Listing All Paired and Connected Phones

The system can list all cell phones paired to it. If a paired cell phone is also connected to the vehicle, the system responds with “is connected” after that phone name.

1. Press ✆ / ⁂. The system responds “Ready,” followed by a tone.
2. Say “Bluetooth.”
3. Say “List.”

Deleting a Paired Phone

If the phone name you want to delete is unknown, see “Listing All Paired and Connected Phones.”

1. Press ✆ / ⁂. The system responds “Ready,” followed by a tone.
2. Say “Bluetooth.”
3. Say “Delete.” The system asks for which phone to delete.
4. Say the name of the phone you want to delete.

Connecting to a Different Phone

To connect to a different cell phone, the Bluetooth system looks for the next available cell phone in the order in which all the available cell phones were paired. Depending on which cell phone you want to connect to, you may have to use this command several times.

1. Press ✆ / ⁂. The system responds “Ready,” followed by a tone.
2. Say “Bluetooth.”
3. Say “Change phone.”
   - If another cell phone is found, the response will be “<Phone name> is now connected.”
   - If another cell phone is not found, the original phone remains connected.

Storing and Deleting Phone Numbers

The system can store up to 30 phone numbers as name tags in the Hands-Free Directory that is shared between the Bluetooth and OnStar systems.

The following commands are used to delete and store phone numbers.

Store: This command will store a phone number, or a group of numbers as a name tag.

Digit Store: This command allows a phone number to be stored as a name tag by entering the digits one at a time.

Delete: This command is used to delete individual name tags.

Downloaded from www.Manualslib.com manuals search engine

Delete All Name Tags: This command deletes all stored name tags in the Hands-Free Calling Directory and the Destinations Directory.

Using the "Store" Command

1. Press / . The system responds "Ready," followed by a tone.
2. Say "Store."
3. Say the phone number or group of numbers you want to store all at once with no pauses, then follow the directions given by the system to save a name tag for this number.

Using the "Digit Store" Command

If an unwanted number is recognized by the system, say "Clear" at any time to clear the last number.

To hear all of the numbers recognized by the system, say "Verify" at any time.

1. Press / . The system responds "Ready," followed by a tone.
2. Say "Digit Store."
3. Say each digit, one at a time, that you want to store. After each digit is entered, the system repeats back the digit it heard followed by a tone. After the last digit has been entered, say "Store," and then follow the directions given by the system to save a name tag for this number.

Using the "Delete" Command

1. Press / . The system responds "Ready," followed by a tone.
2. Say "Delete."
3. Say the name tag you want to delete.

Using the "Delete All Name Tags" Command

This command deletes all stored name tags in the Hands-Free Calling Directory and the Destinations Directory.

To delete all name tags:

1. Press / . The system responds "Ready," followed by a tone.
2. Say "Delete all name tags."

Listing Stored Numbers

The list command will list all the stored numbers and name tags.

Using the "List" Command

1. Press / . The system responds "Ready," followed by a tone.
2. Say "Directory."
3. Say "Hands-Free Calling."
4. Say "List."

Downloaded from www.Manualslib.com manuals search engine

Making a Call

Calls can be made using the following commands.

Dial or Call: The dial or call command can be used interchangeably to dial a phone number or a stored name tag.

Digit Dial: This command allows a phone number to be dialed by entering the digits one at a time.

Re-dial: This command is used to dial the last number used on the cell phone.

Using the "Dial" or "Call" Command

1. Press / . The system responds "Ready," followed by a tone.
2. Say "Dial" or "Call."
3. Say the entire number without pausing or say the name tag.

Once connected, the person called will be heard through the audio speakers.

Calling 911 Emergency

1. Press / . The system responds "Ready," followed by a tone.
2. Say "Dial" or "Call."
3. Say "911."
4. Say "Dial" or "Call."

Using the "Digit Dial" Command

The digit dial command allows a phone number to be dialed by entering the digits one at a time. After each digit is entered, the system repeats back the digit it heard followed by a tone.

If an unwanted number is recognized by the system, say "Clear" at any time to clear the last number.

To hear all of the numbers recognized by the system, say "Verify" at any time.

1. Press / . The system responds "Ready," followed by a tone.
2. Say "Digit Dial."
3. Say each digit, one at a time, that you want to dial. After each digit is entered, the system repeats back the digit it heard followed by a tone. After the last digit has been entered, say "Dial."

Once connected, the person called will be heard through the audio speakers.

Using the "Re-dial" Command

1. Press / . The system responds "Ready," followed by a tone.
2. After the tone, say "Re-dial." The system dials the last number called from the connected cell phone.

Once connected, the person called will be heard through the audio speakers.

Downloaded from www.Manualslib.com manuals search engine

Receiving a Call

When an incoming call is received, the audio system mutes and a ring tone is heard in the vehicle.

- Press / to answer the call.
- Press / to ignore a call.

Call Waiting

Call waiting must be supported on the cell phone and enabled by the wireless service carrier.

- Press / to answer an incoming call when another call is active. The original call is placed on hold.
- Press / again to return to the original call.
- To ignore the incoming call, no action is required.
- Press / to disconnect the current call and switch to the call on hold.

Three-Way Calling

Three-way calling must be supported on the cell phone and enabled by the wireless service carrier.

1. While on a call, press / .
2. Say “Three-way call.”
3. Use the dial or call command to dial the number of the third party to be called.
4. Once the call is connected, press / to link all callers together.

Ending a Call

Press / to end a call.

Muting a Call

During a call, all sounds from inside the vehicle can be muted so that the person on the other end of the call cannot hear them.

To mute a call, press / , and then say “Mute Call.”

To cancel mute, press / , and then say “Un-mute Call.”

Transferring a Call

Audio can be transferred between the Bluetooth system and the cell phone.

The cell phone must be paired and connected with the Bluetooth system before a call can be transferred. The connection process can take up to two minutes after the ignition is turned to ON/RUN.

To Transfer Audio from the Bluetooth System to a Cell Phone

During a call with the audio in the vehicle:

1. Press / .
2. Say “Transfer Call.”

Downloaded from www.Manualslib.com manuals search engine

To Transfer Audio to the Bluetooth System from a Cell Phone

During a call with the audio on the cell phone, press / . The audio transfers to the vehicle. If the audio does not transfer to the vehicle, use the audio transfer feature on the cell phone. See your cell phone manufacturer's user guide for more information.

Voice Pass-Thru

Voice pass-thru allows access to the voice recognition commands on the cell phone. See your cell phone manufacturer's user guide to see if the cell phone supports this feature.

To access contacts stored in the cell phone:

1. Press / . The system responds “Ready,” followed by a tone.
2. Say “Bluetooth.”
3. Say “Voice.” The system responds “OK, accessing <phone name>.”

The cell phone's normal prompt messages will go through their cycle according to the phone's operating instructions.

Dual Tone Multi-Frequency (DTMF) Tones

The Bluetooth system can send numbers and the numbers stored as name tags during a call. You can use this feature when calling a menu-driven phone system. Account numbers can also be stored for use.

Sending a Number or Name Tag During a Call

1. Press / . The system responds “Ready,” followed by a tone.
2. Say “Dial.”
3. Say the number or name tag to send.

Clearing the System

Unless information is deleted out of the in-vehicle Bluetooth system, it will be retained indefinitely. This includes all saved name tags in the phone book and phone pairing information. For information on how to delete this information, see the previous sections on “Deleting a Paired Phone” and “Deleting Name Tags.”

Downloaded from www.Manualslib.com manuals search engine

Trademarks and License Agreements

FCC Information

See *Radio Frequency Statement on page 13-15* for more information regarding Part 15 of the Federal Communications Commission (FCC) rules and Industry Canada Standards RSS-GEN/210/220/310.

Manufactured under license under U.S. Patent #'s: 5,451,942; 5,956,674; 5,974,380; 5,978,762; 6,487,535 & other U.S. and worldwide patents issued & pending. DTS and the Symbol are registered trademarks and DTS Digital Surround and the DTS logos are trademarks of DTS Inc. All Rights Reserved.

Manufactured under license from Dolby Laboratories. Dolby and the double-D symbol are trademarks of Dolby Laboratories.

"Made for iPod and iPhone" means that an electronic accessory has been designed to connect specifically to iPod and has been certified by the developer to meet Apple performance standards.

iPod is a trademark of Apple Computer, Inc., registered in the U.S. and other countries.

iPod, iPod classic, iPod nano, and iPod touch are trademarks of Apple Inc., registered in the U.S. and other countries.

Fees and Taxes: Subscription fee, taxes, one time activation fee, and other fees may apply. Subscription fee is consumer only. All fees and programming subject to change. Subscriptions subject to Customer Agreement available at www.siriusxm.com. SiriusXM® service only available in the 48 contiguous United States and Canada.

In Canada: Some deterioration of service may occur in extreme northern latitudes. This is beyond the control of SiriusXM® Satellite Radio.

Downloaded from www.Manualslib.com manuals search engine

Explicit Language Notice: Channels with frequent explicit language are indicated with an “XL” preceding the channel name. Channel blocking is available for SiriusXM Satellite Radio receivers by notifying SiriusXM:

- USA Customers — Visit www.siriusxm.com or call 1-866-635-2349.
- Canadian Customers — Visit www.xmradio.ca or call 1-877-209-0079.

It is prohibited to copy, decompile, disassemble, reverse engineer, hack, manipulate, or otherwise make available any technology or software incorporated in receivers compatible with the SiriusXM® Satellite Radio System or that support the SiriusXM website, the Online Service or any of its content.

Furthermore, the AMBER voice compression software included in this product is protected by intellectual property rights including patent rights, copyrights, and trade secrets of Digital Voice Systems, Inc.

General Requirements:

1. A License Agreement from SiriusXM is required for any product that incorporates SiriusXM Technology and/or for use of any of the SiriusXM marks to be manufactured, distributed, or marketed in the SiriusXM service Area.
2. For products to be distributed, marketed, and/or sold in Canada, a separate agreement is required with Canadian Satellite Radio Inc. (operating as SiriusXM Canada).

Music and video recognition technology and related data are provided by Gracenote®. Gracenote is the industry standard in music recognition technology and related content delivery. For more information, visit www.gracenote.com.

CD, DVD, Blu-ray Disc, and music and video-related data from Gracenote, Inc., copyright © 2000 to present Gracenote. One or more patents owned by Gracenote apply to this product and service. See the Gracenote website for a non-exhaustive list of applicable Gracenote patents. Gracenote and

Downloaded from www.Manualslib.com manuals search engine

CDDB, MusicID, Media VOCS, the Gracenote logo and logotype, and the “Powered by Gracenote” logo are either registered trademarks or trademarks of Gracenote in the United States and/or other countries.

If you require more information regarding the use of the Gracenote Service, visit: www.gracenote.com/corporate.

For the data provided by Gracenote® Music Recognition Service, the content is not necessarily guaranteed 100%.

Regarding the use of Gracenote Music Recognition Service, when this product is used, it is necessary to agree to the following articles.

Gracenote® End User License

This application or device contains software from Gracenote, Inc. of Emeryville, California (“Gracenote”). The software from Gracenote (the “Gracenote Software”) enables this application to perform disc and/or file identification and obtain music-related information, including name, artist, track, and title information (“Gracenote Data”) from online servers or embedded databases (collectively, “Gracenote Servers”) and to perform other functions. You may use Gracenote Data only by means of the intended End-User functions of this application or device. You agree that you will use Gracenote Data, the Gracenote Software, and Gracenote Servers for your own personal non-commercial use only. You agree not to assign, copy, transfer or transmit the Gracenote Software or any Gracenote Data to any third party.

YOU AGREE NOT TO USE OR EXPLOIT GRACENOTE DATA, THE GRACENOTE SOFTWARE, OR GRACENOTE SERVERS, EXCEPT AS EXPRESSLY PERMITTED HEREIN. You agree that your non-exclusive license to use the Gracenote Data, the Gracenote Software, and Gracenote Servers will terminate if you violate these restrictions. If your license terminates, you agree to cease any and all use of the Gracenote Data, the Gracenote Software, and Gracenote Servers.

Gracenote reserves all rights in Gracenote Data, the Gracenote Software, and the Gracenote Servers, including all ownership rights.

Under no circumstances will Gracenote become liable for any payment to you for any information that you provide. You agree that Gracenote, Inc. may enforce its rights under this Agreement against you directly in its own name.

The Gracenote service uses a unique identifier to track queries for statistical purposes.

The purpose of a randomly assigned numeric identifier is to allow the Gracenote service to count queries without knowing anything about who you are.

Downloaded from www.Manualslib.com manuals search engine

For more information, see the web page for the Gracenote Privacy Policy for the Gracenote service.

The Gracenote Software and each item of Gracenote Data are licensed to you “AS IS.” Gracenote makes no representations or warranties, express or implied, regarding the accuracy of any Gracenote Data from in the Gracenote Servers.

Gracenote reserves the right to delete data from the Gracenote Servers or to change data categories for any cause that Gracenote deems sufficient.

No warranty is made that the Gracenote Software or Gracenote Servers are error-free or that functioning of Gracenote Software or Gracenote Servers will be uninterrupted.

Gracenote is not obligated to provide you with new enhanced or additional data types or categories that Gracenote may provide in the future and is free to discontinue its services at any time.

Gracenote disclaims all warranties express or implied, including, but not limited to, implied warranties of merchantability, fitness for a particular purpose, title, and non-infringement. Gracenote does not warrant the results that will be obtained by your use of the Gracenote Software or any Gracenote Server. In no case will Gracenote be liable for any consequential or incidental damages or for any lost profits or lost revenues.

Downloaded from www.Manualslib.com manuals search engine

Climate Controls

Climate Control Systems
Climate Control Systems 8-1
Automatic Climate Control System 8-3

Air Vents
Air Vents 8-6

Climate Control Systems

The heating, cooling, defrosting, and ventilation for the vehicle can be controlled with these systems.

Vehicles without Air Conditioning

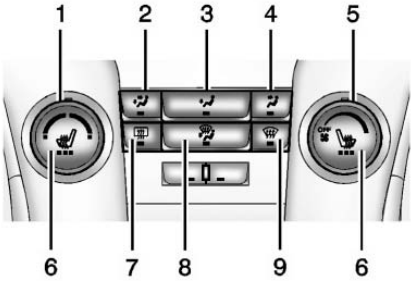

1. Temperature Control
2. Bi-level Air Mode
3. Floor Air Mode
4. Vent Air Mode
5. Fan Control
6. Driver and Passenger Heated Seats (If Equipped)
7. Rear Window Defogger
8. Defog
9. Defrost

Vehicles with Air Conditioning

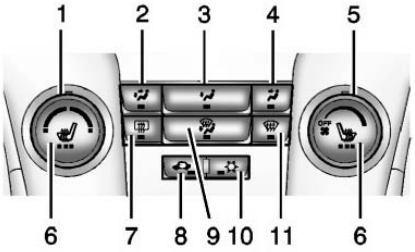

1. Temperature Control
2. Bi-level Air Mode
3. Floor Air Mode
4. Vent Air Mode
5. Fan Control

Downloaded from www.Manualslib.com manuals search engine

6. Driver and Passenger Heated Seats (If Equipped)
7. Rear Window Defogger
8. Recirculation
9. Defog
10. Air Conditioning
11. Defrost

Fan Control: Turn to increase or decrease the fan speed.

Temperature Control: Turn to increase or decrease the temperature.

Air Delivery Mode Control: To change the current mode, press one of the following:

(Vent): Air is directed to the instrument panel outlets.

(Bi-level): Air is directed to the instrument panel outlets and the floor outlets.

(Floor): Air is directed to the floor outlets.

(Defog): Clears the windows of fog or moisture. Air is directed to the windshield and floor outlets.

(Defrost): Clears the windshield of fog or frost more quickly. Air is directed to the windshield and side window outlets.

For best results, clear all snow and ice from the windshield before defrosting.

Do not drive the vehicle until all the windows are clear.

Air Conditioning

(Air Conditioning, If Equipped): Press to turn the air conditioning on or off. If the fan is turned off or the outside temperature falls below freezing, the air conditioning compressor will not work.

(Recirculation, If Equipped): Press to turn on the recirculation. An indicator light comes on. Air is recirculated inside the vehicle. It helps to quickly cool the air inside the vehicle or prevent outside air and odors from entering.

Rear Window Defogger

(Rear Defogger): Press to turn the rear window defogger on or off. The rear window defogger turns off after about 10 minutes. It can also be turned off by turning the ignition to ACC/ACCESSORY or LOCK/OFF. If turned on again it runs for about five minutes before turning off.

Do not drive the vehicle until all the windows are clear.

Notice: **Do not use a razor blade or sharp object to clear the inside rear window. Do not adhere anything to the defogger grid lines in the rear glass. These actions may damage the rear defogger. Repairs would not be covered by your warranty.**

Downloaded from www.Manualslib.com manuals search engine

Heated Seats (If Equipped): Press to turn the heated seats on or off. See *Heated Front Seats on page 3-6*

Automatic Climate Control System

The heating, cooling, and ventilation for the vehicle can be controlled with this system.

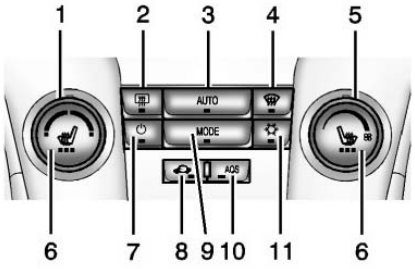

1. Temperature Control
2. Rear Window Defogger
3. AUTO (Automatic Operation)
4. Defrost
5. Fan Control
6. Driver and Passenger Heated Seats (If Equipped)
7. Power
8. Recirculation
9. MODE (Air Delivery Mode)
10. AQS (Air Quality Sensor)
11. Air Conditioning

Automatic Operation

The system automatically controls the fan speed, air delivery, air conditioning, and recirculation in order to heat or cool the vehicle to the desired temperature.

When the indicator light is on, the system is in full automatic operation. If the air delivery mode or fan setting is manually adjusted, the auto indicator turns off and displays will show the selected settings.

To place the system in automatic mode do the following:

1. Press AUTO.
2. Set the temperature. Allow the system time to stabilize. Then adjust the temperature as needed for best comfort.

English units can be changed to metric units through the Driver Information Center (DIC). See *Vehicle Personalization on page 5-30*.

Manual Operation

⏻ **(Power):** Press to turn the climate control system on or off.

(Fan Control): Turn the knob clockwise or counterclockwise to increase or decrease the fan speed. The selected fan speed is indicated by a number on the display screen. Press AUTO to return to automatic operation.

Downloaded from www.Manualslib.com manuals search engine

8-4 Climate Controls

MODE (Air Delivery Mode): Press to change the direction of the airflow. The current mode appears in the display screen. Automatic operation is cancelled and manual mode is initiated. Press AUTO to return to automatic operation.

To change the current mode, select one of the following:

(Vent): Air is directed to the instrument panel outlets.

(Bi-level): Air is divided between the instrument panel outlets and the floor outlets.

(Tri-level): Air is divided between the windshield, instrument panel, and floor outlets.

(Floor): Air is directed to the floor outlets.

(Defog): Clears the windows of fog or moisture. Air is directed to the windshield and floor outlets.

(Defrost): Clears the windshield of fog or frost more quickly. Air is directed to the windshield.

(Air Conditioning): Press to turn the automatic air conditioning on or off. If the fan is turned off or the outside temperature falls below freezing, the air conditioning compressor will not run.

Press AUTO to return to automatic operation and the air conditioner runs as needed. When the indicator light is on, the air conditioner runs automatically to cool the air inside the vehicle or to dry the air needed to defog the windshield faster.

(Recirculation): Press to turn on recirculation. An indicator light comes on. Air is recirculated to quickly cool the inside of the vehicle or prevent outside air and odors from entering.

Automatic Air Recirculation: When the AUTO indicator light is on, the air is automatically recirculated as needed to help quickly cool the inside of the vehicle.

AQS (Air Quality Sensor): For vehicles with an air quality sensor, the climate control system adjusts to limit some exhaust fumes from being pulled inside your vehicle.

Press the AQS button on the climate control to activate the air quality sensor. The air quality sensor will not maintain recirculation for an extended period to prevent the air inside the vehicle from becoming too dry or stuffy.
To adjust the sensitivity of the Air Quality Control, see “Climate and Air Quality” under *Vehicle Personalization on page 5-30*.

Auto Defog: The climate control system may have a sensor to automatically detect high humidity inside the vehicle. When high humidity is detected, the climate control system may adjust to outside air supply and turn on the air conditioner. If the climate control system does not detect possible window fogging, it returns to normal operation. To turn Auto Defog off or

Downloaded from www.Manualslib.com manuals search engine

on, see “Climate and Air Quality” under *Vehicle Personalization on page 5-30*.

Rear Window Defogger

(Rear Window Defogger): Press to turn the rear window defogger on or off.

The rear window defogger turns off automatically after about 10 minutes. If turned on again it runs for about five minutes before turning off.

The rear window defogger can be set to automatic operation; see “Climate and Air Quality” under *Vehicle Personalization on page 5-30*. When auto rear defog is selected, the rear window defogger turns on automatically when the interior temperature is cold and the outside temperature is about 4°C (40°F) and below. The auto rear defogger turns off automatically after about 10 minutes. At higher speeds, the rear window defogger may stay on continuously.

For vehicles with heated outside rearview mirrors, they turn on when the rear window defogger button is on and help to clear fog or frost from the surface of the mirrors. See *Heated Mirrors on page 2-12*.

Notice: **Do not try to clear frost or other material from the inside of the front windshield and rear window with a razor blade or anything else that is sharp. This may damage the rear window defogger grid and affect the radio's ability to pick up stations clearly. The repairs would not be covered by the vehicle warranty.**

Heated Seats (If Equipped): Press to turn the heated seats on or off. See *Heated Front Seats on page 3-6*.

Remote Start Climate Control Operation: For vehicles with the remote vehicle start feature, the climate control system may run when the vehicle is started remotely. The system uses the driver’s previous settings to heat or cool the inside of the vehicle. The rear defog may come on during remote start based on cold ambient conditions. The rear defog indicator light does not come on during a remote start. If the vehicle has front heated seats, they may come on during a remote start. The heated seat indicator lights do not come on during a remote start. See *Remote Vehicle Start on page 2-5* and *Heated Front Seats on page 3-6*.

Sensors

The solar sensor, located on top of the instrument panel near the windshield, monitors the solar heat.

The climate control system uses the sensor information to adjust the temperature, fan speed, recirculation, and air delivery mode for best comfort.

If the sensor is covered, the automatic climate control system may not work properly.

Downloaded from www.Manualslib.com manuals search engine

Air Vents

Adjustable air vents are in the center and on the side of the instrument panel.

Move the slats (1) to change the direction of the airflow. Use the thumbwheels (2) near the air vents to open or close off the airflow.

Additional air vents are located beneath the windshield and the driver and passenger side door windows, and in the footwells. These are fixed and cannot be adjusted.

Operation Tips

- Clear away any ice, snow, or leaves from air inlets at the base of the windshield that could block the flow of air into the vehicle.
- Keep the path under the front seats clear of objects to help circulate the air inside of the vehicle more effectively.
- Use of non-GM approved hood deflectors can adversely affect the performance of the system. Check with your dealer before adding equipment to the outside of the vehicle.

Downloaded from www.Manualslib.com manuals search engine

Driving and Operating

Driving Information
Distracted Driving 9-2
Defensive Driving 9-2
Drunk Driving 9-3
Control of a Vehicle 9-3
Braking 9-3
Steering 9-3
Off-Road Recovery 9-4
Loss of Control 9-4
Driving on Wet Roads 9-5
Highway Hypnosis 9-6
Hill and Mountain Roads 9-6
Winter Driving 9-7
If the Vehicle Is Stuck 9-8
Vehicle Load Limits 9-9

Starting and Operating
New Vehicle Break-In 9-13
Ignition Positions 9-14
Starting the Engine 9-16
Engine Heater 9-17
Retained Accessory Power (RAP) 9-18
Shifting Into Park 9-18
Shifting out of Park 9-19
Parking 9-20
Parking over Things That Burn 9-20

Engine Exhaust
Engine Exhaust 9-20
Running the Vehicle While Parked 9-21

Automatic Transmission
Automatic Transmission 9-21
Manual Mode 9-23

Manual Transmission
Manual Transmission 9-24

Brakes
Antilock Brake System (ABS) 9-26
Parking Brake 9-27
Brake Assist 9-27

Ride Control Systems
Traction Control System (TCS) 9-28
StabiliTrak® System 9-29

Cruise Control
Cruise Control 9-31

Object Detection Systems
Ultrasonic Parking Assist 9-33
Rear Vision Camera (RVC) 9-35

Fuel
Fuel 9-38
Recommended Fuel 9-38
Gasoline Specifications 9-38
California Fuel Requirements 9-38
Fuels in Foreign Countries . . . 9-39
Fuel Additives 9-39
Filling the Tank 9-40
Filling a Portable Fuel Container 9-41

Towing
General Towing Information 9-42
Driving Characteristics and Towing Tips 9-42
Trailer Towing 9-45
Towing Equipment 9-46

Conversions and Add-Ons
Add-On Electrical Equipment 9-47

Downloaded from www.Manualslib.com manuals search engine

Driving Information

Distracted Driving

Distraction comes in many forms and can take your focus from the task of driving. Exercise good judgment and do not let other activities divert your attention away from the road. Many local governments have enacted laws regarding driver distraction. Become familiar with the local laws in your area.

To avoid distracted driving, always keep your eyes on the road, hands on the wheel, and mind on the drive.

- Do not use a phone in demanding driving situations. Use a hands-free method to place or receive necessary phone calls.
- Watch the road. Do not read, take notes, or look up information on phones or other electronic devices.
- Designate a front seat passenger to handle potential distractions.
- Become familiar with vehicle features before driving, such as programming favorite radio stations and adjusting climate control and seat settings. Program all trip information into any navigation device prior to driving.
- Wait until the vehicle is parked to retrieve items that have fallen to the floor.
- Stop or park the vehicle to tend to children.
- Keep pets in an appropriate carrier or restraint.
- Avoid stressful conversations while driving, whether with a passenger or on a cell phone.

⚠ WARNING

Taking your eyes off the road too long or too often could cause a crash resulting in injury or death. Focus your attention on driving.

Defensive Driving

Defensive driving means “always expect the unexpected.” The first step in driving defensively is to wear the safety belt. See *Safety Belts on page 3-15*.

- Assume that other road users (pedestrians, bicyclists, and other drivers) are going to be careless and make mistakes. Anticipate what they might do and be ready.
- Allow enough following distance between you and the driver in front of you.
- Focus on the task of driving.

Downloaded from www.Manualslib.com manuals search engine

Drunk Driving

Death and injury associated with drinking and driving is a global tragedy.

⚠ WARNING

Drinking and then driving is very dangerous. Your reflexes, perceptions, attentiveness, and judgment can be affected by even a small amount of alcohol. You can have a serious — or even fatal — collision if you drive after drinking.

Do not drink and drive or ride with a driver who has been drinking. Ride home in a cab; or if you are with a group, designate a driver who will not drink.

Control of a Vehicle

Braking, steering, and accelerating are important factors in helping to control a vehicle while driving.

Braking

Braking action involves perception time and reaction time. Deciding to push the brake pedal is perception time. Actually doing it is reaction time.

Average driver reaction time is about three-quarters of a second. In that time, a vehicle moving at 100 km/h (60 mph) travels 20 m (66 ft), which could be a lot of distance in an emergency.

Helpful braking tips to keep in mind include:

- Keep enough distance between you and the vehicle in front of you.
- Avoid needless heavy braking.
- Keep pace with traffic.

If the engine ever stops while the vehicle is being driven, brake normally but do not pump the brakes. Doing so could make the pedal harder to push down. If the engine stops, there will be some power brake assist but it will be used when the brake is applied. Once the power assist is used up, it can take longer to stop and the brake pedal will be harder to push.

Steering

Electric Power Steering

The vehicle has electric power steering. It does not have power steering fluid. Regular maintenance is not required.

If power steering assist is lost due to a system malfunction, the vehicle can be steered, but may require increased effort. See your dealer if there is a problem.

If the steering wheel is turned until it reaches the end of its travel and is held against that position for an extended period of time, power steering assist may be reduced.

Normal use of the power steering assist should return when the system cools down.

Downloaded from www.Manualslib.com manuals search engine

See specific vehicle steering messages under *Service Vehicle Messages on page 5-28*.

See your dealer if there is a problem.

Curve Tips

- Take curves at a reasonable speed.
- Reduce speed before entering a curve.
- Maintain a reasonable steady speed through the curve.
- Wait until the vehicle is out of the curve before accelerating gently into the straightaway.

Steering in Emergencies

- There are some situations when steering around a problem may be more effective than braking.
- Holding both sides of the steering wheel allows you to turn 180 degrees without removing a hand.
- The Antilock Brake System (ABS) allows steering while braking.

Off-Road Recovery

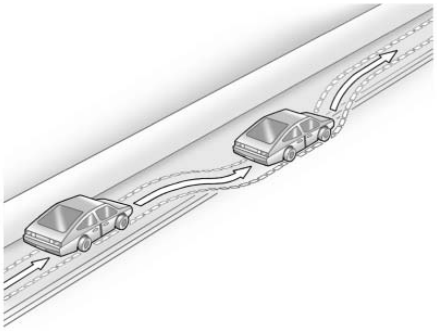

The vehicle's right wheels can drop off the edge of a road onto the shoulder while driving. Follow these tips:

1. Ease off the accelerator and then, if there is nothing in the way, steer the vehicle so that it straddles the edge of the pavement.
2. Turn the steering wheel about one-eighth of a turn, until the right front tire contacts the pavement edge.
3. Turn the steering wheel to go straight down the roadway.

Loss of Control

Skidding

There are three types of skids that correspond to the vehicle's three control systems:

- Braking Skid — wheels are not rolling.
- Steering or Cornering Skid — too much speed or steering in a curve causes tires to slip and lose cornering force.
- Acceleration Skid — too much throttle causes the driving wheels to spin.

Downloaded from www.Manualslib.com manuals search engine

Defensive drivers avoid most skids by taking reasonable care suited to existing conditions, and by not overdriving those conditions. But skids are always possible.

If the vehicle starts to slide, follow these suggestions:

- Ease your foot off the accelerator pedal and steer the way you want the vehicle to go. The vehicle may straighten out. Be ready for a second skid if it occurs.
- Slow down and adjust your driving according to weather conditions. Stopping distance can be longer and vehicle control can be affected when traction is reduced by water, snow, ice, gravel, or other material on the road. Learn to recognize warning clues — such as enough water, ice, or packed snow on the road to make a mirrored surface — and slow down when you have any doubt.
- Try to avoid sudden steering, acceleration, or braking, including reducing vehicle speed by shifting to a lower gear. Any sudden changes could cause the tires to slide.

Remember: Antilock brakes help avoid only the braking skid.

Driving on Wet Roads

Rain and wet roads can reduce vehicle traction and affect your ability to stop and accelerate. Always drive slower in these types of driving conditions and avoid driving through large puddles and deep-standing or flowing water.

⚠ WARNING

Wet brakes can cause crashes. They might not work as well in a quick stop and could cause pulling to one side. You could lose control of the vehicle.

(Continued)

WARNING (Continued)

After driving through a large puddle of water or a car/vehicle wash, lightly apply the brake pedal until the brakes work normally.

Flowing or rushing water creates strong forces. Driving through flowing water could cause the vehicle to be carried away. If this happens, you and other vehicle occupants could drown. Do not ignore police warnings and be very cautious about trying to drive through flowing water.

Hydroplaning

Hydroplaning is dangerous. Water can build up under the vehicle's tires so they actually ride on the water. This can happen if the road is wet enough and you are going fast enough. When the vehicle is hydroplaning, it has little or no contact with the road.

Downloaded from www.Manualslib.com manuals search engine

There is no hard and fast rule about hydroplaning. The best advice is to slow down when the road is wet.

Other Rainy Weather Tips

Besides slowing down, other wet weather driving tips include:

- Allow extra following distance.
- Pass with caution.
- Keep windshield wiping equipment in good shape.
- Keep the windshield washer fluid reservoir filled.
- Have good tires with proper tread depth. See *Tires on page 10-37*.
- Turn off cruise control.

Highway Hypnosis

Always be alert and pay attention to your surroundings while driving. If you become tired or sleepy, find a safe place to park the vehicle and rest.

Other driving tips include:

- Keep the vehicle well ventilated.
- Keep the interior temperature cool.
- Keep your eyes moving — scan the road ahead and to the sides.
- Check the rearview mirror and vehicle instruments often.

Hill and Mountain Roads

Driving on steep hills or through mountains is different than driving on flat or rolling terrain. Tips for driving in these conditions include:

- Keep the vehicle serviced and in good shape.
- Check all fluid levels and brakes, tires, cooling system, and transmission.
- Shift to a lower gear when going down steep or long hills.

⚠ WARNING

If you do not shift down, the brakes could get so hot that they would not work well. You would then have poor braking or even none going down a hill. You could crash. Shift down to let the engine assist the brakes on a steep downhill slope.

⚠ WARNING

Coasting downhill in N (Neutral) or with the ignition off is dangerous. The brakes will have to do all the work of slowing down and they could get so hot that they would not work well. You would then have poor braking or even none going down a hill. Steering may also be affected when ignition is off. You could

(Continued)

Downloaded from www.Manualslib.com manuals search engine

WARNING (Continued)

crash. Always have the engine running and the vehicle in gear when going downhill.

- Stay in your own lane. Do not swing wide or cut across the center of the road. Drive at speeds that let you stay in your own lane.
- Be alert on top of hills; something could be in your lane (stalled car, accident).
- Pay attention to special road signs (falling rocks area, winding roads, long grades, passing or no-passing zones) and take appropriate action.

Winter Driving

Driving on Snow or Ice

Drive carefully when there is snow or ice between the tires and the road, creating less traction or grip.

Wet ice can occur at about 0°C (32°F) when freezing rain begins to fall, resulting in even less traction. Avoid driving on wet ice or in freezing rain until roads can be treated with salt or sand.

Drive with caution, whatever the condition. Accelerate gently so traction is not lost. Accelerating too quickly causes the wheels to spin and makes the surface under the tires slick, so there is even less traction.

Try not to break the fragile traction. If you accelerate too fast, the drive wheels will spin and polish the surface under the tires even more.

The Antilock Brake System (ABS) improves vehicle stability during hard stops on slippery roads, but apply the brakes sooner than when on dry pavement. See *Antilock Brake System (ABS) on page 9-26*.

Allow greater following distance on any slippery road and watch for slippery spots. Icy patches can occur on otherwise clear roads in shaded areas. The surface of a curve or an overpass can remain icy when the surrounding roads are clear. Avoid sudden steering maneuvers and braking while on ice.

Turn off cruise control on slippery surfaces.

Blizzard Conditions

Being stuck in snow can be a serious situation. Stay with the vehicle unless there is help nearby. If possible, use Roadside Assistance. See *Roadside Assistance Program on page 13-5*. To get help and keep everyone in the vehicle safe:

- Turn on the hazard warning flashers.
- Tie a red cloth to an outside mirror.

Downloaded from www.Manualslib.com manuals search engine

⚠ WARNING

Snow can trap engine exhaust under the vehicle. This may cause exhaust gases to get inside. Engine exhaust contains carbon monoxide (CO) which cannot be seen or smelled. It can cause unconsciousness and even death.

If the vehicle is stuck in the snow:

- Clear away snow from around the base of your vehicle, especially any that is blocking the exhaust pipe.
- Check again from time to time to be sure snow does not collect there.
- Open a window about 5 cm (2 in) on the side of the vehicle that is away from the wind to bring in fresh air.

(Continued)

WARNING (Continued)

- Fully open the air outlets on or under the instrument panel.
- Adjust the climate control system to a setting that circulates the air inside the vehicle and set the fan speed to the highest setting. See "Climate Control Systems" in the Index.

For more information about carbon monoxide, see *Engine Exhaust on page 9-20*.

To save fuel, run the engine for only short periods as needed to warm the vehicle and then shut the engine off and close the window most of the way to save heat. Repeat this until help arrives but only when you feel really uncomfortable from the cold. Moving about to keep warm also helps.

If it takes some time for help to arrive, now and then when you run the engine, push the accelerator pedal slightly so the engine runs faster than the idle speed. This keeps the battery charged to restart the vehicle and to signal for help with the headlamps. Do this as little as possible to save fuel.

If the Vehicle Is Stuck

Slowly and cautiously spin the wheels to free the vehicle when stuck in sand, mud, ice, or snow.

If stuck too severely for the traction system to free the vehicle, turn the traction system off and use the rocking method. See *Traction Control System (TCS) on page 9-28*.

⚠ WARNING

If the vehicle's tires spin at high speed, they can explode, and you or others could be injured. The

(Continued)

Downloaded from www.Manualslib.com manuals search engine

WARNING (Continued)

vehicle can overheat, causing an engine compartment fire or other damage. Spin the wheels as little as possible and avoid going above 56 km/h (35 mph).

Rocking the Vehicle to Get it Out

Turn the steering wheel left and right to clear the area around the front wheels. Turn off any traction system. Shift back and forth between R (Reverse) and a low forward gear, spinning the wheels as little as possible. To prevent transmission wear, wait until the wheels stop spinning before shifting gears. Release the accelerator pedal while shifting, and press lightly on the accelerator pedal when the transmission is in gear.

Slowly spinning the wheels in the forward and reverse directions causes a rocking motion that could free the vehicle. If that does not get the vehicle out after a few tries, it might need to be towed out. If the vehicle does need to be towed out, see *Towing the Vehicle on page 10-75*.

Vehicle Load Limits

It is very important to know how much weight the vehicle can carry. This weight is called the vehicle capacity weight and includes the weight of all occupants, cargo, and all nonfactory-installed options. Two labels on the vehicle show how much weight it may properly carry: the Tire and Loading Information label and the Certification label.

⚠ WARNING

Do not load the vehicle any heavier than the Gross Vehicle Weight Rating (GVWR), or either the maximum front or rear Gross Axle Weight Rating (GAWR). This can cause systems to break and change the way the vehicle handles. This could cause loss of control and a crash. Overloading can also shorten the life of the vehicle.

Downloaded from www.Manualslib.com manuals search engine

Tire and Loading Information Label

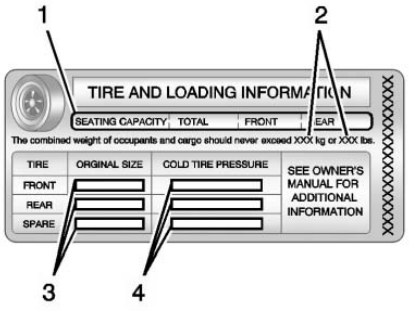

Label Example

A vehicle-specific Tire and Loading Information label is attached to the vehicle center pillar (B-pillar). With the driver door open, you will find the label attached below the door lock post. The Tire and Loading Information label shows the number of occupant seating positions (1), and the maximum vehicle capacity weight (2) in kilograms and pounds.

The Tire and Loading Information label also shows the tire size of the original equipment tires (3) and the recommended cold tire inflation pressures (4). For more information on tires and inflation see *Tires on page 10-37* and *Tire Pressure on page 10-43*.

There is also important loading information on the Certification label. It tells you the Gross Vehicle Weight Rating (GVWR) and the Gross Axle Weight Rating (GAWR) for the front and rear axle; see “Certification Label” later in this section.

Steps for Determining Correct Load Limit

1. Locate the statement “The combined weight of occupants and cargo should never exceed XXX kg or XXX lbs” on your vehicle's placard.
2. Determine the combined weight of the driver and passengers that will be riding in your vehicle.
3. Subtract the combined weight of the driver and passengers from XXX kg or XXX lbs.
4. The resulting figure equals the available amount of cargo and luggage load capacity. For example, if the “XXX” amount equals 1400 lbs and there will be five 150 lb passengers in your vehicle, the amount of available cargo

Downloaded from www.Manualslib.com manuals search engine

and luggage load capacity is 650 lbs (1400 − 750 (5 x 150) = 650 lbs).

5. Determine the combined weight of luggage and cargo being loaded on the vehicle. That weight may not safely exceed the available cargo and luggage load capacity calculated in Step 4.
6. If your vehicle will be towing a trailer, the load from your trailer will be transferred to your vehicle. Consult this manual to determine how this reduces the available cargo and luggage load capacity of your vehicle.

See *Trailer Towing on page 9-45* for important information on towing a trailer, towing safety rules, and trailering tips.

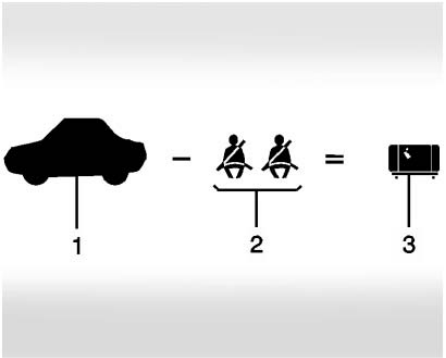

Example 1

1. Vehicle Capacity Weight for Example 1 = 453 kg (1,000 lbs).
2. Subtract Occupant Weight @ 68 kg (150 lbs) × 2 = 136 kg (300 lbs).
3. Available Occupant and Cargo Weight = 317 kg (700 lbs).

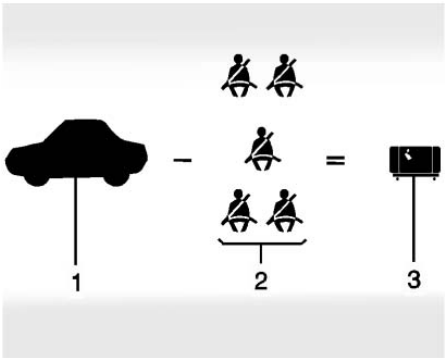

Example 2

1. Vehicle Capacity Weight for Example 2 = 453 kg (1,000 lbs).
2. Subtract Occupant Weight @ 68 kg (150 lbs) × 5 = 340 kg (750 lbs).
3. Available Cargo Weight = 113 kg (250 lbs).

Downloaded from www.Manualslib.com manuals search engine

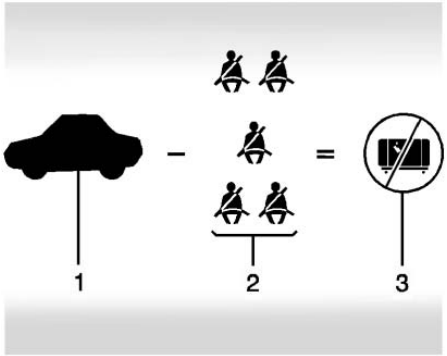

Example 3

1. Vehicle Capacity Weight for Example 3 = 453 kg (1,000 lbs).
2. Subtract Occupant Weight @ 91 kg (200 lbs) × 5 = 453 kg (1,000 lbs).
3. Available Cargo Weight = 0 kg (0 lbs).

Refer to the vehicle's Tire and Loading Information label for specific information about the vehicle's capacity weight and seating positions. The combined weight of the driver, passengers, and cargo should never exceed the vehicle's capacity weight.

Certification Label

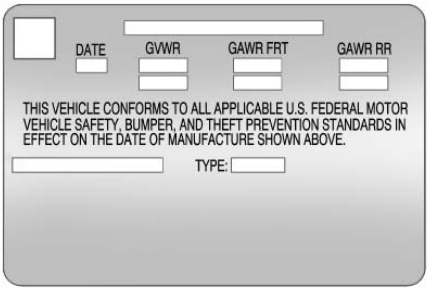

Label Example

A vehicle-specific Certification label, found on the vehicle center pillar (B-pillar), tells you the gross weight capacity of the vehicle, called the Gross Vehicle Weight Rating (GVWR). The GVWR includes the weight of the vehicle, all occupants, fuel, and cargo. Never exceed the GVWR for the vehicle, or the Gross Axle Weight Rating (GAWR) for either the front or rear axle.

And, if you do have a heavy load, you should spread it out. See “Steps for Determining Correct Load Limit” earlier in this section.

⚠ WARNING

Do not load the vehicle any heavier than the Gross Vehicle Weight Rating (GVWR), or either the maximum front or rear Gross Axle Weight Rating (GAWR). This can cause systems to break and change the way the vehicle handles. This could cause loss of control and a crash. Overloading can also shorten the life of the vehicle.

Downloaded from www.Manualslib.com manuals search engine

If you put things inside the vehicle — like suitcases, tools, packages, or anything else — they will go as fast as the vehicle goes. If you have to stop or turn quickly, or if there is a crash, they will keep going.

⚠ WARNING

Things inside the vehicle can strike and injure people in a sudden stop or turn, or in a crash.

- Put things in the cargo area of the vehicle. In the cargo area, put them as far forward as possible. Try to spread the weight evenly.

(Continued)

WARNING (Continued)

- Never stack heavier things, like suitcases, inside the vehicle so that some of them are above the tops of the seats.
- Do not leave an unsecured child restraint in the vehicle.
- Secure loose items in the vehicle.
- Do not leave a seat folded down unless needed.

Starting and Operating

New Vehicle Break-In

Notice: **The vehicle does not need an elaborate break-in. But it will perform better in the long run if you follow these guidelines:**

- **Do not drive at any one constant speed, fast or slow, for the first 805 km (500 mi). Do not make full-throttle starts. Avoid downshifting to brake or slow the vehicle.**
- **During the first 1 000 km (600 mi), avoid using more than moderate acceleration in lower gears and avoid vehicle speeds above 110 km/h (68 mph).**

Downloaded from www.Manualslib.com manuals search engine

- **Between the first 1 000 km (600 mi) and 5 000 km (3,000 mi), heavy acceleration in lower gears can be used. Vehicle speeds above 110 km/h (68 mph) should be limited to five minutes per use.**
- **Avoid making hard stops for the first 322 km (200 mi) or so. During this time the new brake linings are not yet broken in. Hard stops with new linings can mean premature wear and earlier replacement. Follow this breaking-in guideline every time you get new brake linings.**
- **Do not tow a trailer during break-in. See *Driving Characteristics and Towing Tips on page 9-42* for the trailer towing capabilities of your vehicle and more information.**

Following break-in, engine speed and load can be gradually increased.

Ignition Positions

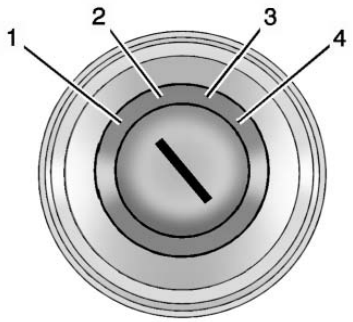

The ignition switch has four different positions.

Notice: **Using a tool to force the key to turn in the ignition could cause damage to the switch or break the key. Use the correct key, make sure it is all the way in, and turn it only with your hand. If the key cannot be turned by hand, see your dealer.**

To shift out of P (Park), turn the ignition to ON/RUN and apply the brake pedal.

1 (STOPPING THE ENGINE/LOCK/OFF): When the vehicle is stopped, turn the ignition switch to LOCK/OFF to turn the engine off. Retained Accessory Power (RAP) will remain active. See *Retained Accessory Power (RAP) on page 9-18* for more information.

This is the only position from which the key can be removed. Removing the key locks the steering wheel.

The ignition switch can bind in the LOCK/OFF position with the key removed and wheels turned off center. If this happens, move the steering wheel from right to left while turning the key to ACC/ACCESSORY. If this does not work, then the vehicle needs service.

Downloaded from www.Manualslib.com manuals search engine

Do not turn the engine off when the vehicle is moving. This will cause a loss of power assist in the brake and steering systems and disable the airbags.

If the vehicle must be shut off in an emergency:

1. Brake using a firm and steady pressure. Do not pump the brakes repeatedly. This may deplete power assist, requiring increased brake pedal force.
2. Shift the vehicle to neutral. This can be done while the vehicle is moving. After shifting to neutral, firmly apply the brakes and steer the vehicle to a safe location.
3. Come to a complete stop. Shift to P (Park) with an automatic transmission, or Neutral with a manual transmission. Turn the ignition to LOCK/OFF.
4. Set the parking brake. See *Parking Brake on page 9-27*.

⚠ WARNING

Turning off the vehicle while moving may cause loss of power assist in the brake and steering systems and disable the airbags. While driving, only shut the vehicle off in an emergency.

If the vehicle cannot be pulled over, and must be shut off while driving, turn the ignition to ACC/ACCESSORY.

2 (ACC/ACCESSORY): This position provides power to some of the electrical accessories. It unlocks the steering wheel. To move the key from ACC/ACCESSORY to LOCK/OFF, the shift lever must be in P (Park).

3 (ON/RUN): The ignition switch stays in this position when the engine is running. This position can be used to operate the electrical accessories, as well as to display some warning and indicator lights. This position can also be used for service and diagnostics, and to verify the proper operation of the malfunction indicator lamp as may be required for emission inspection purposes.

The battery could be drained if the key is left in the ACC/ACCESSORY or ON/RUN position with the engine off. The vehicle might not restart if the battery is allowed to drain for an extended period of time.

4 (START): This position starts the engine. When the engine starts, release the key. The ignition switch will return to ON/RUN for normal driving.

A warning tone sounds when the driver door is opened and the key is in the ignition. If the key becomes difficult to turn, see *Keys on page 2-1*.

Downloaded from www.Manualslib.com manuals search engine

Key Lock Release

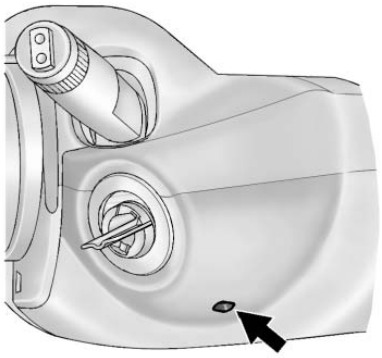

Vehicles with an automatic transmission are equipped with an electronic key lock release system. This system is to prevent ignition key removal unless the shift lever is in P (Park).

The key lock release will not work if the battery is charged less than 9-volts, or uncharged. Try charging or jump starting the battery. See *Jump Starting on page 10-73*

If charging or jump starting the battery does not work, there is a manual key lock release. Locate the hole below the ignition lock. Insert a tool or key into the opening. Locate the lever, and press it toward the driver while removing the key from the ignition.

Starting the Engine

Place the transmission in the proper gear.

Automatic Transmission

Move the shift lever to P (Park) or N (Neutral). The engine will not start in any other position. To restart the vehicle when it is already moving, use N (Neutral) only.

Notice: **Do not try to shift to P (Park) if the vehicle is moving. If you do, you could damage the transmission. Shift to P (Park) only when the vehicle is stopped.**

Notice: **If you add electrical parts or accessories, you could change the way the engine operates. Any resulting damage would not be covered by the vehicle warranty. See *Add-On Electrical Equipment on page 9-47*.**

Manual Transmission

The shift lever should be in Neutral and the parking brake engaged. Hold the clutch pedal down to the floor and start the engine. The vehicle will not start if the clutch pedal is not all the way down.

Starting Procedure

1. With your foot off the accelerator pedal, turn the ignition key to START. When the engine starts, let go of the ignition.

   The idle speed will go down as your engine gets warm. Do not race the engine immediately after starting it. Operate the engine and transmission gently to allow the oil to warm up and lubricate all moving parts.

Downloaded from www.Manualslib.com manuals search engine

The vehicle has a Computer-Controlled Cranking System. This feature assists in starting the engine and protects components. If the ignition key is turned to the START position, and then released when the engine begins cranking, the engine will continue cranking for a few seconds or until the vehicle starts. If the engine does not start and the key is held in START for many seconds, cranking will be stopped after 15 seconds to prevent cranking motor damage. To prevent gear damage, this system also prevents cranking if the engine is already running. Engine cranking can be stopped by turning the ignition switch to ACC/ACCESSORY or LOCK/OFF.

Notice: **Cranking the engine for long periods of time, by returning the key to the START position immediately after cranking has ended, can overheat and damage the cranking motor, and drain the battery. Wait at least 15 seconds between each try, to let the cranking motor cool down.**

2. If the engine does not start after five to 10 seconds, especially in very cold weather (below −18°C or 0°F), it could be flooded with too much gasoline. Try pushing the accelerator pedal all the way to the floor and holding it there as you hold the key in START for up to a maximum of 15 seconds. Wait at least 15 seconds between each try, to allow the cranking motor to cool down. When the engine starts, let go of the key or button, and the accelerator. If the vehicle starts briefly but then stops again, do the same thing. This clears the extra gasoline from the engine. Do not race the engine immediately after starting it. Operate the engine and transmission gently until the oil warms up and lubricates all moving parts.

Engine Heater

The engine heater can help in cold weather conditions at or below −18°C (0°F) for easier starting and better fuel economy during engine warm-up. Plug in the heater at least four hours before starting the vehicle. An internal thermostat in the plug-end of the cord will prevent engine heater operation at temperatures above −18°C (0°F).

To Use The Engine Heater

1. Turn off the engine.
2. Open the hood and unwrap the electrical cord stored near the air cleaner.
3. Plug it into a normal, grounded 110-volt AC outlet.

Downloaded from www.Manualslib.com manuals search engine

⚠ WARNING

Plugging the cord into an ungrounded outlet could cause an electrical shock. Also, the wrong kind of extension cord could overheat and cause a fire. You could be seriously injured. Plug the cord into a properly grounded three-prong 110-volt AC outlet. If the cord will not reach, use a heavy-duty three-prong extension cord rated for at least 15 amps.

4. Before starting the engine, be sure to unplug and store the cord as it was before to keep it away from moving engine parts. If you do not it could be damaged.

The length of time the heater should remain plugged in depends on several factors. Ask a dealer in the area where you will be parking the vehicle for the best advice on this.

Retained Accessory Power (RAP)

These vehicle accessories may be used for up to 10 minutes after the engine is turned off:

- Audio System
- Power Windows
- Sunroof

The power windows and sunroof will continue to work for up to 10 minutes or until any door is opened. The radio will work when the key is in ON/RUN or ACC/ACCESSORY. Once the key is turned from ON/RUN to LOCK/OFF, the radio will continue to work for 10 minutes, or until the driver door is opened.

Shifting Into Park

Use this procedure to shift into P (Park):

1. Hold the brake pedal down and set the parking brake.

   See *Parking Brake on page 9-27* for more information.

2. Hold the button on the shift lever and push the lever toward the front of the vehicle into P (Park).
3. Turn the ignition to LOCK/OFF.

Downloaded from www.Manualslib.com manuals search engine

Leaving the Vehicle with the Engine Running

⚠ WARNING

It can be dangerous to leave the vehicle with the engine running. It could overheat and catch fire.

It is dangerous to get out of the vehicle if the shift lever is not fully in P (Park) with the parking brake firmly set. The vehicle can roll.

Do not leave the vehicle when the engine is running. If you have left the engine running, the vehicle can move suddenly. You or others could be injured. To be sure the vehicle will not move, even when you are on fairly level ground, always set the parking brake and move the shift lever to P (Park). See *Shifting Into Park on page 9-18*. If you are towing a trailer, see *Driving Characteristics and Towing Tips on page 9-42*.

If you have to leave the vehicle with the engine running, the vehicle must be in P (Park) and the parking brake set.

Release the button and check that the shift lever cannot be moved out of P (Park).

Torque Lock

Torque lock is when the weight of the vehicle puts too much force on the parking pawl in the transmission. This happens when parking on a hill and shifting the transmission into P (Park) is not done properly and then it is difficult to shift out of P (Park). To prevent torque lock, set the parking brake and then shift into P (Park). To find out how, see “Shifting Into Park” listed previously.

If torque lock does occur, the vehicle may need to be pushed uphill by another vehicle to relieve the parking pawl pressure, so you can shift out of P (Park).

Shifting out of Park

To shift out of P (Park):

1. Apply the brake pedal.
2. Turn the ignition to ON/RUN.
3. Press the shift lever button.
4. Move the shift lever.

If you still are unable to shift out of P (Park):

1. Fully release the shift lever button.
2. Hold the brake pedal down and press the shift lever button again.
3. Move the shift lever.

If you still cannot move the shift lever from P (Park), see your dealer for service.

Downloaded from www.Manualslib.com manuals search engine

Parking

If the vehicle has a manual transmission, before getting out of the vehicle, move the shift lever into R (Reverse), and firmly apply the parking brake. Once the shift lever has been placed into R (Reverse) with the clutch pedal pressed in, turn the ignition key to LOCK/OFF, remove the key and release the clutch.

If parking on a hill, or if the vehicle is pulling a trailer, see *Driving Characteristics and Towing Tips on page 9-42*.

Parking over Things That Burn

⚠ WARNING

Things that can burn could touch hot exhaust parts under the vehicle and ignite. Do not park over papers, leaves, dry grass, or other things that can burn.

Engine Exhaust

⚠ WARNING

Engine exhaust contains carbon monoxide (CO) which cannot be seen or smelled. Exposure to CO can cause unconsciousness and even death.

Exhaust may enter the vehicle if:

- The vehicle idles in areas with poor ventilation (parking garages, tunnels, deep snow that may block underbody airflow or tail pipes).
- The exhaust smells or sounds strange or different.
- The exhaust system leaks due to corrosion or damage.
- The vehicle exhaust system has been modified, damaged, or improperly repaired.

(Continued)

WARNING (Continued)

- There are holes or openings in the vehicle body from damage or aftermarket modifications that are not completely sealed.

If unusual fumes are detected or if it is suspected that exhaust is coming into the vehicle:

- Drive it only with the windows completely down.
- Have the vehicle repaired immediately.

Never park the vehicle with the engine running in an enclosed area such as a garage or a building that has no fresh air ventilation.

Downloaded from www.Manualslib.com manuals search engine

Running the Vehicle While Parked

It is better not to park with the engine running.

If the vehicle is left with the engine running, follow the proper steps to be sure the vehicle will not move. See *Shifting Into Park on page 9-18* and *Engine Exhaust on page 9-20*. If the vehicle has a manual transmission, see *Parking on page 9-20*.

If parking on a hill and pulling a trailer, see *Driving Characteristics and Towing Tips on page 9-42*.

Automatic Transmission

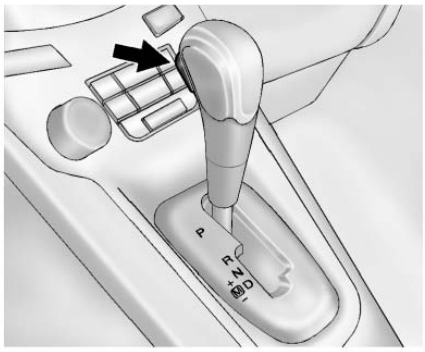

The selected gear is also shown in the instrument cluster.

P (Park): This position locks the drive wheels. It is the best position to use when starting the engine because the vehicle cannot move easily.

⚠ WARNING

It is dangerous to get out of the vehicle if the shift lever is not fully in P (Park) with the parking brake firmly set. The vehicle can roll.

Do not leave the vehicle when the engine is running. If you have left the engine running, the vehicle can move suddenly. You or others could be injured. To be sure the vehicle will not move, even when you are on fairly level ground, always set the parking brake and move the shift lever to P (Park). See *Shifting Into Park on page 9-18* and *Driving Characteristics and Towing Tips on page 9-42*.

Downloaded from www.Manualslib.com manuals search engine

Make sure the shift lever is fully in P (Park) before starting the engine. The vehicle has an automatic transmission shift lock control system. The regular brake must be fully applied first and then the shift lever button pressed before shifting from P (Park) when the ignition key is in ON/RUN. If you cannot shift out of P (Park), ease pressure on the shift lever, then push the shift lever all the way into P (Park) as you maintain brake application. Then press the shift lever button and move the shift lever into another gear. See *Shifting out of Park on page 9-19*.

R (Reverse): Use this gear to back up.

Notice: **Shifting to R (Reverse) while the vehicle is moving forward could damage the transmission. The repairs would not be covered by the vehicle warranty. Shift to R (Reverse) only after the vehicle is stopped.**

To rock the vehicle back and forth to get out of snow, ice or sand without damaging the transmission, see *If the Vehicle Is Stuck on page 9-8*.

N (Neutral): In this position, the engine does not connect with the wheels. To restart the engine when the vehicle is already moving, use N (Neutral) only. Also, use N (Neutral) when the vehicle is being towed.

The vehicle has an automatic neutral shift feature which allows the transmission to automatically shift to N (Neutral) when the vehicle is stopped with a forward gear engaged. The reduced load on the engine improves vehicle fuel economy.

⚠ WARNING

Shifting into a drive gear while the engine is running at high speed is dangerous. Unless your foot is firmly on the brake pedal, the

(Continued)

WARNING (Continued)

vehicle could move very rapidly. You could lose control and hit people or objects. Do not shift into a drive gear while the engine is running at high speed.

Notice: **Shifting out of P (Park) or N (Neutral) with the engine running at high speed may damage the transmission. The repairs would not be covered by the vehicle warranty. Be sure the engine is not running at high speed when shifting the vehicle.**

D (Drive): This position is for normal driving. It provides the best fuel economy. If more power is needed for passing, and the vehicle is:

- Going less than 56 km/h (35 mph), push the accelerator pedal about halfway down.

Downloaded from www.Manualslib.com manuals search engine

- Going about 56 km/h (35 mph) or more, push the accelerator all the way down.

Notice: **If the vehicle seems to accelerate slowly or not shift gears when you go faster, and you continue to drive the vehicle that way, you could damage the transmission. Have the vehicle serviced right away.**

Manual Mode

Driver Shift Control (DSC)

Notice: **Driving with the engine at a high rpm without upshifting while using Driver Shift Control (DSC), could damage the vehicle. Always upshift when necessary while using DSC.**

Driver Shift Control (DSC) allows you to shift an automatic transmission similar to a manual transmission. To use the DSC feature:

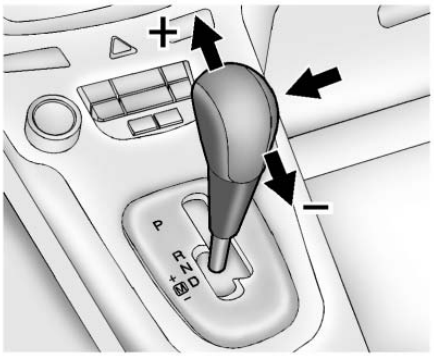

1. Move the shift lever from D (Drive) to the left into the (+) or (−) manual position.

2. Press the shift lever forward (+) to upshift or rearward (−) to downshift. An M and the current gear will be displayed in the DIC.

While using the DSC feature, the vehicle will have firmer, quicker shifting. You can use this for sport driving or when climbing or descending hills, to stay in gear longer, or to down shift for more power or engine braking.

Downloaded from www.Manualslib.com manuals search engine

The transmission will only allow you to shift into gears appropriate for the vehicle speed and engine revolutions per minute (rpm). The transmission will not automatically shift to the next lower gear if the engine rpm is too high, nor to the next higher gear when the maximum engine rpm is reached.

If shifting is prevented for any reason, the currently selected gear will flash multiple times, indicating that the transmission has not shifted gears.

While in the DSC mode, the transmission will automatically downshift when the vehicle comes to a stop. This will allow for more power during take-off.

When accelerating the vehicle from a stop in snowy and icy conditions, you may want to shift into second gear. A higher gear allows the vehicle to gain more traction on slippery surfaces.

Manual Transmission

The manual transmission has a shift lever located on the console between the seats.

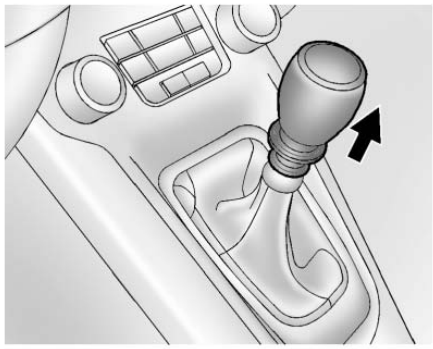

To operate the transmission:

Notice: **Do not rest your hand on the shift lever while driving. The pressure could cause premature wear in the transmission. The repairs would not be covered by the vehicle warranty.**

Notice: **Do not rest your foot on the clutch pedal while driving or while stopped. The pressure can cause premature wear in the clutch. The repairs would not be covered by the vehicle warranty.**

1 (First): Press the clutch pedal fully to the pedal stop and shift into 1 (First). Then slowly let up on the clutch pedal as you press the accelerator pedal.

If you come to a complete stop and it is hard to shift into 1 (First), put the shift lever in Neutral and let up on the clutch. Press the clutch pedal back down. Then shift into 1 (First).

2 (Second): Press the clutch pedal fully to the pedal stop as you let up on the accelerator pedal and shift into 2 (Second). Then, slowly let up on the clutch pedal as you press the accelerator pedal.

Downloaded from www.Manualslib.com manuals search engine

3 (Third), 4 (Fourth), 5 (Fifth) and 6 (Sixth): Shift into 3 (Third), 4 (Fourth), 5 (Fifth) and 6 (Sixth) the same way you do for 2 (Second). Slowly let up on the clutch pedal as you press the accelerator pedal.

For the best fuel economy, use 6 (Sixth) gear whenever vehicle speed and driving conditions allow.

The vehicle may have an up-shift light in the instrument cluster. It shows when to shift to the next higher gear for the best fuel economy.

During normal driving, upshifts should occur between 1,300 and 2,500 rpm, and downshifts should occur between 1,500 and 1,000 rpm.

To stop, let up on the accelerator pedal and press the brake pedal. Just before the vehicle stops, press the clutch pedal and the brake pedal, and shift to Neutral.

Neutral: Use this position when you start or idle the engine. The shift lever is in Neutral when it is centered in the shift pattern, not in any gear.

R (Reverse): To back up, with the vehicle at a complete stop, press down the clutch pedal. Then pull up the ring on the shift lever, and shift into R (Reverse). Let up on the clutch pedal slowly while pressing the accelerator pedal.

If the gear does not engage, shift the transmission to neutral, release the clutch pedal and press it back down. Repeat the gear selection.

⚠ WARNING

If you skip a gear when you downshift, you could lose control of the vehicle. You could injure yourself or others. Do not shift down more than one gear at a time when you downshift.

Notice: **Do not skip gears while upshifting. This can cause premature wear in the transmission. The repairs would not be covered by the vehicle warranty.**

Downloaded from www.Manualslib.com manuals search engine

Brakes

Antilock Brake System (ABS)

This vehicle has the Antilock Brake System (ABS), an advanced electronic braking system that helps prevent a braking skid.

When the engine is started and the vehicle begins to drive away, ABS checks itself. A momentary motor or clicking noise might be heard while this test is going on, and it might even be noticed that the brake pedal moves a little. This is normal.

If there is a problem with ABS, this warning light stays on. See *Antilock Brake System (ABS) Warning Light on page 5-15*.

If driving safely on a wet road and it becomes necessary to slam on the brakes and continue braking to avoid a sudden obstacle, a computer senses that the wheels are slowing down. If one of the wheels is about to stop rolling, the computer will separately work the brakes at each wheel.

ABS can change the brake pressure to each wheel, as required, faster than any driver could. This can help the driver steer around the obstacle while braking hard.

As the brakes are applied, the computer keeps receiving updates on wheel speed and controls braking pressure accordingly.

Remember: ABS does not change the time needed to get a foot up to the brake pedal or always decrease stopping distance. If you get too close to the vehicle in front of you, there will not be enough time to apply the brakes if that vehicle suddenly slows or stops. Always leave enough room up ahead to stop, even with ABS.

Using ABS

Do not pump the brakes. Just hold the brake pedal down firmly and let ABS work. You might hear the ABS pump or motor operating and feel the brake pedal pulsate, but this is normal.

Braking in Emergencies

ABS allows the driver to steer and brake at the same time. In many emergencies, steering can help more than even the very best braking.

Downloaded from www.Manualslib.com manuals search engine

Parking Brake

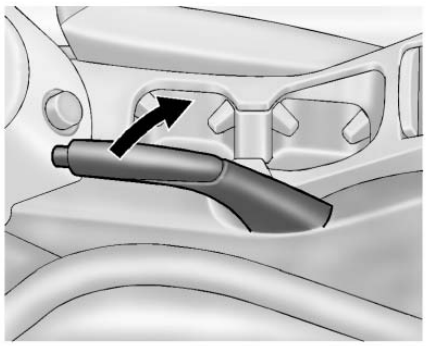

To apply the parking brake, pull up on the parking brake handle. It is not necessary to push in on the release button while applying the parking brake. If the ignition is in the ON/RUN position, the brake system warning light will come on. See *Brake System Warning Light on page 5-14*.

To release the parking brake:

1. Hold the brake pedal down.
2. Pull the parking brake handle up until you can press the release button.
3. Hold the release button in as you move the brake handle all the way down.

Notice: **Driving with the parking brake on can overheat the brake system and cause premature wear or damage to brake system parts. Make sure that the parking brake is fully released and the brake warning light is off before driving.**

Driving with the parking brake applied will cause a warning chime to sound and the RELEASE PARKING BRAKE message to appear in the DIC. The message will remain on until the parking brake is released or the vehicle is stopped.

If parking on a hill, or if the vehicle is pulling a trailer, see *Driving Characteristics and Towing Tips on page 9-42*.

Brake Assist

This vehicle has a brake assist feature designed to assist the driver in stopping or decreasing vehicle speed in emergency driving conditions. This feature uses the stability system hydraulic brake control module to supplement the power brake system under conditions where the driver has quickly and forcefully applied the brake pedal in an attempt to quickly stop or slow down the vehicle. The stability system hydraulic brake control module increases brake pressure at each corner of the vehicle until the ABS activates. Minor brake pedal pulsation or pedal movement during this time is normal and the driver should continue to apply the brake pedal as the driving situation dictates. The brake assist feature will automatically disengage when the brake pedal is released or brake pedal pressure is quickly decreased.

Downloaded from www.Manualslib.com manuals search engine

Ride Control Systems

Traction Control System (TCS)

The vehicle has a Traction Control System (TCS) that limits wheel spin. On a front-wheel-drive vehicle, the system operates if it senses that one or both of the front wheels are spinning or beginning to lose traction. When this happens, the system brakes the spinning wheel(s), and/or reduces engine power to limit wheel spin.

The system may be heard or felt while it is working, but this is normal.

TCS is on whenever the vehicle is started. To limit wheel spin, especially in slippery road conditions, the system should always be left on. But, TCS can be turned off if needed.

TCS/StabiliTrak Light

The TCS/StabiliTrak light flashes to indicate that the traction control system is active.

If there is a problem detected with TCS, SERVICE TRACTION CONTROL and SERVICE STABILITRAK may be displayed on the Driver Information Center (DIC). See *Ride Control System Messages on page 5-28*. When this message is displayed and the TCS/StabiliTrak light comes on and stays on, the vehicle is safe to drive but the system is not operational. Driving should be adjusted accordingly.

If the TCS/StabiliTrak light comes on and stays on, reset the system:

1. Stop the vehicle.
2. Turn the engine off and wait 15 seconds.
3. Start the engine.

If the TCS/StabiliTrak light still comes on and stays on at a speed above 20 km/h (13 mph), see your dealer for service.

A chime may also sound when the light comes on steady.

Notice: **Do not repeatedly brake or accelerate heavily when TCS is off. The vehicle's driveline could be damaged.**

Downloaded from www.Manualslib.com manuals search engine

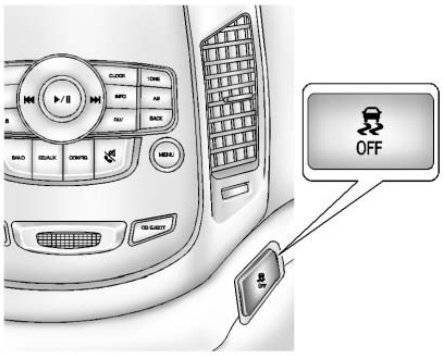

TCS/StabiliTrak Button

TCS Off Light

TCS can be turned off by pressing and releasing the TCS/StabiliTrak button. When TCS is turned off, the TCS Off light comes on and the system will not limit wheel spin. Driving should be adjusted accordingly. Press and release the TCS/StabiliTrak button again to turn the system back on.

It may be necessary to turn the system off if the vehicle gets stuck in sand, mud, or snow and rocking the vehicle is required. See *If the Vehicle Is Stuck on page 9-8* for more information. See also *Winter Driving on page 9-7* for information on using TCS when driving in snowy or icy conditions.

If cruise control is being used when TCS activates, cruise control will automatically disengage. Press the cruise control button to reengage when road conditions allow. See *Cruise Control on page 9-31*.

Adding non-GM accessories can affect the vehicle performance. See *Accessories and Modifications on page 10-3* for more information.

StabiliTrak® System

The vehicle has a vehicle stability enhancement system called StabiliTrak. It is an advanced computer controlled system that assists with directional control of the vehicle in difficult driving conditions.

StabiliTrak activates when the computer senses a difference between the intended path, and the direction the vehicle is actually traveling. StabiliTrak selectively applies braking pressure at any one of the vehicle's brakes to help steer the vehicle in the intended direction.

StabiliTrak is on automatically whenever the vehicle is started. To assist with directional control of the vehicle, the system should always be left on.

Downloaded from www.Manualslib.com manuals search engine

TCS/StabiliTrak Light

When the stability control system activates, the TCS/StabiliTrak light flashes on the instrument panel. This also occurs when traction control is activated. A noise may be heard or vibration may be felt in the brake pedal. This is normal. Continue to steer the vehicle in the intended direction.

If there is a problem detected with StabiliTrak, SERVICE STABILITRAK is displayed on the Driver Information Center (DIC). See *Ride Control System Messages on page 5-28*. When this message is displayed and/or the TCS/StabiliTrak light comes on and stays on, the vehicle is safe to drive but the system is not operational. Driving should be adjusted accordingly.

If the TCS/StabiliTrak light comes on and stays on, reset the system:

1. Stop the vehicle.
2. Turn the engine off and wait 15 seconds.
3. Start the engine.

If the TCS/StabiliTrak light still comes on and stays on at a speed above 20 km/h (13 mph), see your dealer for service.

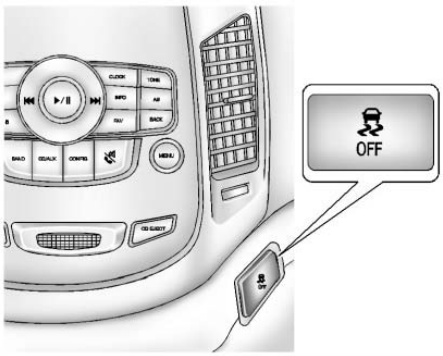

TCS/StabiliTrak Button

TCS Off Light

StabiliTrak OFF Light

StabiliTrak can be turned off if needed by pressing and holding the TCS/StabiliTrak button until the TCS Off light and the StabiliTrak OFF light come on. When StabiliTrak is turned off, the system will not assist with directional control of the vehicle or limit wheel spin. Driving should be adjusted accordingly. Press and release the TCS/StabiliTrak button again to turn both systems back on.

If cruise control is being used when StabiliTrak activates, cruise control will automatically disengage. Press the cruise control button to reengage when road conditions allow. See *Cruise Control on page 9-31* for more information.

Downloaded from www.Manualslib.com manuals search engine

Cruise Control

For vehicles with cruise control, the vehicle can maintain a speed of about 40 km/h (25 mph) or more without keeping your foot on the accelerator. Cruise control does not work at speeds below 40 km/h (25 mph).

If the brakes are applied, the cruise control shuts off.

The vehicle has a Traction Control System (TCS) or StabiliTrak system that begins to limit wheel spin while using cruise control and the cruise control will automatically disengage. See *Traction Control System (TCS) on page 9-28* or *StabiliTrak® System on page 9-29*. When road conditions allow you to safely use it again, the cruise control can be turned on.

⚠ WARNING

Cruise control can be dangerous where you cannot drive safely at a steady speed. So, do not use the cruise control on winding roads or in heavy traffic.

Cruise control can be dangerous on slippery roads. On such roads, fast changes in tire traction can cause excessive wheel slip, and you could lose control. Do not use cruise control on slippery roads.

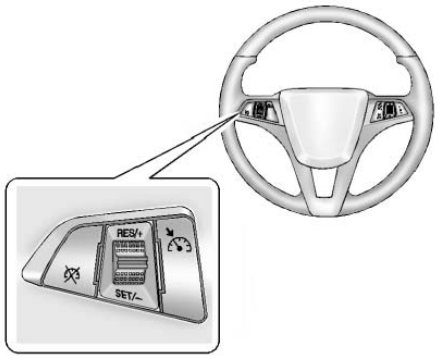

(On/Off): Press to turn the cruise control system on and off.

RES/+ (Resume/Accelerate): Move the thumbwheel up to resume a previously set speed or to accelerate.

SET/− (Set/Coast): Move the thumbwheel down to set a speed or to make the vehicle decelerate.

(Cancel): Press to disengage cruise control without erasing the set speed from memory.

Downloaded from www.Manualslib.com manuals search engine

Setting Cruise Control

If the cruise button is on when not in use, it could get bumped and go into cruise when not desired. Keep the cruise control switch off when cruise is not being used.

1. Press .
2. Get to the speed desired.
3. Move the thumbwheel down and release it.
4. Take your foot off the accelerator pedal.

Resuming a Set Speed

If the cruise control is set at a desired speed and then the brakes or clutch for manual transmissions are applied, the cruise control is disengaged without erasing the set speed from memory.

Once the vehicle reaches about 40 km/h (25 mph) or more, move the thumbwheel up toward RES/+ briefly. The vehicle returns to the speed selected previously and stays there.

Increasing Speed While Using Cruise Control

If the cruise control system is already activated:

- Move the thumbwheel up toward RES/+ and hold it until the desired speed is reached, then release it.
- To increase the speed in small amounts, move the thumbwheel up toward RES/+ briefly and then release it. Each time this is done, the vehicle goes about 1.6 km/h (1 mph) faster.

Reducing Speed While Using Cruise Control

If the cruise control system is already activated:

- Move the thumbwheel toward SET/− and hold until the desired lower speed is reached, then release it.
- To slow down in small amounts, move the thumbwheel toward SET/− briefly. Each time this is done, the vehicle goes about 1.6 km/h (1 mph) slower.

Passing Another Vehicle While Using Cruise Control

Use the accelerator pedal to increase the vehicle speed. When you take your foot off the pedal, the vehicle slows down to the previous set cruise control speed.

Using Cruise Control on Hills

How well the cruise control works on hills depends upon the vehicle speed, load, and the steepness of the hills. When going up steep hills, you might have to step on the accelerator pedal to maintain the vehicle speed. When going downhill, you might have to brake or shift to a lower gear to maintain the vehicle speed. When the brakes are applied, the cruise control is disengaged.

Downloaded from www.Manualslib.com manuals search engine

Ending Cruise Control

There are three ways to end cruise control:

- To disengage cruise control, step lightly on the brake pedal or clutch for a manual transmission.
- Press on the steering wheel.
- To turn off cruise control, press on the steering wheel.

Erasing Speed Memory

The cruise control set speed is erased from memory if is pressed or if the ignition is turned off.

Object Detection Systems

Ultrasonic Parking Assist

For vehicles with the Ultrasonic Rear Parking Assist (URPA) system, it assists the driver with parking and avoiding objects while in R (Reverse). URPA operates at speeds less than 8 km/h (5 mph), and the sensors on the rear bumper detect objects up to 2.5 m (8 ft) behind the vehicle, and at least 20 cm (8 in) off the ground.

⚠ WARNING

The URPA system does not detect children, pedestrians, bicyclists, animals, or objects below the bumper or that are too close or too far from the vehicle. It is not available at speeds greater than 8 km/h (5 mph). To prevent injury, death, or vehicle

(Continued)

WARNING (Continued)

damage, even with URPA, always check the area around the vehicle and check all mirrors before backing.

How the System Works

URPA comes on automatically when the shift lever is moved into R (Reverse). A single tone sounds to indicate the system is working.

URPA operates only at speeds less than 8 km/h (5 mph).

An obstacle is indicated by audible beeps. The interval between the beeps becomes shorter as the vehicle gets closer to the obstacle. When the distance is less than 30 cm (12 in) the beeping is a continuous tone for five seconds.

Downloaded from www.Manualslib.com manuals search engine

To be detected, objects must be at least 20 cm (8 in) off the ground and below liftgate level. Objects must also be within 2.5 m (8 ft) from the rear bumper. The distance objects can be detected may be less during warmer or humid weather.

Turning the System On and Off

The URPA system can be turned on and off using the infotainment system controls. See *Vehicle Personalization on page 5-30* for more information.

When the system is off, PARK ASSIST OFF displays on the Driver Information Center (DIC). The message disappears after a short period of time.

URPA defaults to the on setting each time the vehicle is started.

When the System Does Not Seem to Work Properly

The following messages may be displayed on the DIC:

SERVICE PARKING ASSIST: If this message occurs, check the following conditions:

- The ultrasonic sensors are not clean. Keep the vehicle's rear bumper free of mud, dirt, snow, ice, and slush. For cleaning instructions, see *Exterior Care on page 10-78*.
- The park assist sensors are covered by frost or ice. Frost or ice can form around and behind the sensors and may not always be seen; this can occur after washing the vehicle in cold weather. The message may not clear until the frost or ice has melted.

If the above conditions do not exist, take the vehicle to your dealer to repair the system.

PARK ASSIST OFF: If the URPA system does not activate due to a temporary condition, the message displays on the DIC. This can occur under the following conditions:

- The driver has disabled the system.
- A trailer was attached to the vehicle, or an object was hanging out of the liftgate during the last drive cycle. Once the object is removed, URPA will return to normal operation.
- A tow bar is attached to the vehicle.
- The bumper is damaged. Take the vehicle to your dealer to repair the system.
- Other conditions, such as vibrations from a jackhammer or the compression of air brakes on a very large truck, are affecting system performance.

Downloaded from www.Manualslib.com manuals search engine

Rear Vision Camera (RVC)

The vehicle may have a Rear Vision Camera (RVC) system. Read this entire section before using it.

The RVC can assist the driver when backing up by displaying a view of the area behind the vehicle.

⚠ WARNING

The RVC system does not display children, pedestrians, bicyclists, animals, or any other object located outside the camera's field of view, below the bumper, or under the vehicle. Perceived distances may be different from actual distances. Do not back the vehicle using only the RVC screen, during longer, higher speed backing maneuvers, or where there could be cross traffic. Failure to use proper care before backing may result in

(Continued)

WARNING (Continued)

injury, death, or vehicle damage. Always check behind and around the vehicle before backing.

An image appears on the radio screen with the message Check Surroundings for Safety when the vehicle is shifted into R (Reverse). The radio screen goes to the previous screen after approximately 10 seconds once the vehicle is shifted out of R (Reverse).

To cancel the delay, do one of the following:

- Press a button on the radio.
- Shift into P (Park).
- Reach a vehicle speed of 8 km/h (5 mph).

Turning the Rear Vision Camera System On or Off

To turn the rear vision camera system on or off:

1. Shift into P (Park).
2. Press the CONFIG button.
3. Select Display.
4. Select Rear Camera Options.
5. Select Camera. When a check mark appears next to the Camera option, then the RVC system is on.

Symbols

The RVC system may have a feature that lets the driver view symbols on the radio screen while using the RVC. The Ultrasonic Rear Park Assist (URPA) system must not be disabled to use the caution symbols. The error message Rear Parking Assist Symbols Unavailable may display if URPA has been disabled and the symbols have been turned on. See *Ultrasonic Parking Assist on page 9-33*.

Downloaded from www.Manualslib.com manuals search engine

The symbols appear and may cover an object when viewing the radio screen when an object is detected by the URPA system.

To turn the symbols on or off:

1. Shift into P (Park).
2. Press the CONFIG button.
3. Select Display.
4. Select Rear Camera Options.
5. Select Symbols. When a check mark appears next to the Symbols option, symbols will appear.

Guidelines

The RVC system has a guideline overlay that can help the driver align the vehicle when backing into a parking spot.

To turn the guidelines on or off:

1. Shift into P (Park).
2. Press the CONFIG button.
3. Select Display.
4. Select Rear Camera Options.
5. Select Guidelines. When a check mark appears next to the Guidelines option, guidelines will appear.

Rear Vision Camera Error Messages

SERVICE REAR VISION CAMERA SYSTEM: This message can display on the radio screen when the system is not receiving information it requires from other vehicle systems.

If any other problem occurs or if a problem persists, see your dealer.

Rear Vision Camera Location

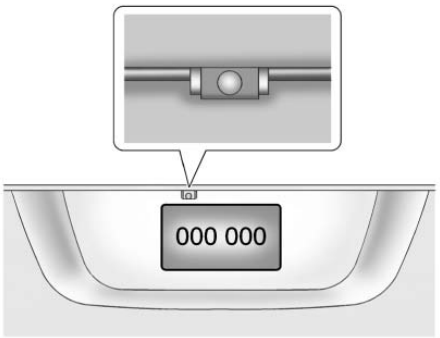

The camera is located above the license plate.

The area displayed by the camera is limited.

It does not display objects that are close to either corner or under the bumper and can vary depending on vehicle orientation or road conditions. The distance of the image that appears on the screen is different from the actual distance.

Downloaded from www.Manualslib.com manuals search engine

The following illustration shows the field of view that the camera provides.

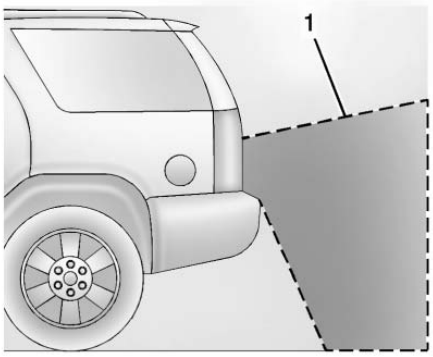

1. View displayed by the camera.

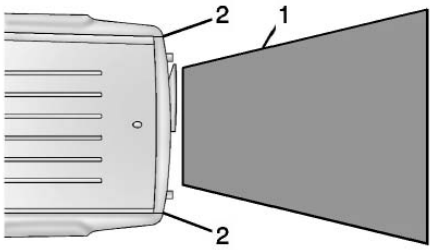

1. View displayed by the camera.
2. Corner of the rear bumper.

When the System Does Not Seem To Work Properly

The RVC system may not work properly or display a clear image if:

- The RVC is turned off. See “Turning the Rear Vision Camera System On or Off” earlier in this section.
- It is dark.
- The sun or the beam of headlights is shining directly into the camera lens.
- Ice, snow, mud, or anything else builds up on the camera lens. Clean the lens, rinse it with water, and wipe it with a soft cloth.
- The back of the vehicle is in an accident, the position and mounting angle of the camera can change or the camera can be affected. Be sure to have the camera and its position and mounting angle checked at your dealer.

Downloaded from www.Manualslib.com manuals search engine

Fuel

Use of the recommended fuel is an important part of the proper maintenance of this vehicle. To help keep the engine clean and maintain optimum vehicle performance, we recommend the use of gasoline advertised as TOP TIER Detergent Gasoline.

Look for the TOP TIER label on the fuel pump to ensure gasoline meets enhanced detergency standards developed by auto companies. A list of marketers providing TOP TIER Detergent Gasoline can be found at www.toptiergas.com. TOP TIER gasoline is only available in the U.S. and Canada.

Recommended Fuel

Use regular unleaded gasoline with a posted octane rating of 87 or higher. If the octane rating is less than 87, an audible knocking noise, commonly referred to as spark knock, might be heard when driving. If this occurs, use a gasoline rated at 87 octane or higher as soon as possible. If heavy knocking is heard when using gasoline rated at 87 octane or higher, the engine needs service.

Gasoline Specifications

At a minimum, gasoline should meet ASTM specification D 4814. Some gasolines contain an octane-enhancing additive called methylcyclopentadienyl manganese tricarbonyl (MMT). We recommend against the use of gasolines containing MMT. See *Fuel Additives on page 9-39* for additional information.

California Fuel Requirements

If the vehicle is certified to meet California Emissions Standards, it is designed to operate on fuels that meet California specifications. See the underhood emission control label. If this fuel is not available in states adopting California Emissions Standards, the vehicle will operate satisfactorily on fuels meeting federal specifications, but emission control system performance might be affected. The malfunction indicator lamp could turn on and the

Downloaded from www.Manualslib.com manuals search engine

vehicle might fail a smog-check test. See *Malfunction Indicator Lamp on page 5-12*. If this occurs, return to your authorized dealer for diagnosis. If it is determined that the condition is caused by the type of fuel used, repairs might not be covered by the vehicle warranty.

Fuels in Foreign Countries

Never use leaded gasoline or any other fuel not recommended in the previous text on fuel. Costly repairs caused by use of improper fuel would not be covered by the vehicle warranty.

To check the fuel availability, ask an auto club, or contact a major oil company that does business in the country where you will be driving.

Fuel Additives

To provide cleaner air, all gasolines in the United States are now required to contain additives that help prevent engine and fuel system deposits from forming, allowing the emission control system to work properly. In most cases, nothing should have to be added to the fuel. However, some gasolines contain only the minimum amount of additive required to meet U.S. Environmental Protection Agency regulations. To help keep fuel injectors and intake valves clean and avoid problems due to dirty injectors or valves, look for gasoline that is advertised as TOP TIER Detergent Gasoline. Look for the TOP TIER label on the fuel pump to ensure gasoline meets enhanced detergency standards developed by the auto companies. A list of marketers providing TOP TIER Detergent Gasoline can be found at www.toptiergas.com.

For customers who do not use TOP TIER Detergent Gasoline regularly, one bottle of GM Fuel System Treatment PLUS, added to the fuel tank at every engine oil change, can help clean deposits from fuel injectors and intake valves. GM Fuel System Treatment PLUS is the only gasoline additive recommended by General Motors. It is available at your dealer.

Gasolines containing oxygenates, such as ethers and ethanol, and reformulated gasolines might be available in your area. We recommend that you use these gasolines, if they comply with the specifications described earlier. However, E85 (85% ethanol) and other fuels containing more than 10% ethanol must not be used in vehicles that were not designed for those fuels.

Notice: **This vehicle was not designed for fuel that contains methanol. Do not use fuel containing methanol. It can corrode metal parts in the fuel system and also damage plastic and rubber parts. That damage would not be covered under the vehicle warranty.**

Downloaded from www.Manualslib.com manuals search engine

Some gasolines that are not reformulated for low emissions can contain an octane-enhancing additive called methylcyclopentadienyl manganese tricarbonyl (MMT); ask the attendant where you buy gasoline whether the fuel contains MMT. We recommend against the use of such gasolines. Fuels containing MMT can reduce spark plug life and affect emission control system performance. The malfunction indicator lamp might turn on. If this occurs, return to your dealer for service.

Filling the Tank

⚠ WARNING

Fuel vapors and fuel fires burn violently and can cause injury or death.

- To help avoid injuries to you and others, read and follow all the instructions on the fuel pump island.
- Turn off the engine when refueling.
- Keep sparks, flames, and smoking materials away from fuel.
- Do not leave the fuel pump unattended.
- Do not reenter the vehicle while pumping fuel.
- Keep children away from the fuel pump and never let children pump fuel.

(Continued)

WARNING (Continued)

- Fuel can spray out if the fuel cap is opened too quickly. This spray can happen if the tank is nearly full, and is more likely in hot weather. Open the fuel cap slowly and wait for any hiss noise to stop then unscrew the cap all the way

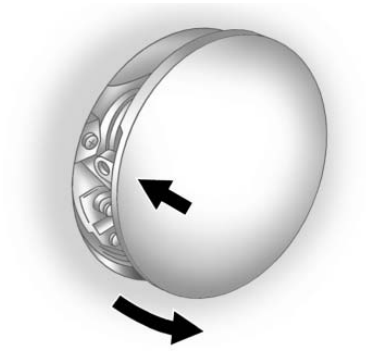

Downloaded from www.Manualslib.com manuals search engine

The tethered fuel cap is behind the fuel door on the vehicle's passenger side. Turn the fuel cap counterclockwise to remove. While refueling, hang the tethered fuel cap from the disk on the end of the fuel cap to the mating feature on the fuel door hinge. Reinstall the cap by turning it clockwise until it clicks.

Do not top off or overfill the tank. Wait a few seconds before removing the nozzle. Clean fuel from painted surfaces as soon as possible. See *Exterior Care on page 10-78*.

⚠ WARNING

If a fire starts while you are refueling, do not remove the nozzle. Shut off the flow of fuel by shutting off the pump or by notifying the station attendant. Leave the area immediately.

Notice: **If a new fuel cap is needed, be sure to get the right type of cap from your dealer. The wrong type of fuel cap might not fit properly, might cause the malfunction indicator lamp to light, and could damage the fuel tank and emissions system. See *Malfunction Indicator Lamp on page 5-12*.**

Filling a Portable Fuel Container

⚠ WARNING

Filling a portable fuel container while it is in the vehicle can cause fuel vapors that can ignite either by static electricity or other means. You or others could be badly burned and the vehicle could be damaged. Always:

- Use approved fuel containers.

(Continued)

WARNING (Continued)

- Remove container from vehicle, trunk, or pickup bed before filling.
- Place container on the ground.
- Place the nozzle inside the fill opening of the container before dispensing fuel, and keep it in contact with the fill opening until filling is complete.
- Do not smoke while pumping fuel.

Downloaded from www.Manualslib.com manuals search engine

Towing

General Towing Information

Only use towing equipment that has been designed for the vehicle. Contact your dealer or trailering dealer for assistance with preparing the vehicle for towing a trailer. Read the entire section before towing a trailer.

For towing a disabled vehicle, see *Towing the Vehicle on page 10-75*. For towing the vehicle behind another vehicle such as a motor home, see *Recreational Vehicle Towing on page 10-76*.

Driving Characteristics and Towing Tips

Driving with a Trailer

When towing a trailer:

- Become familiar with the state and local laws that apply specifically to trailer towing.
- Do not tow a trailer during the first 800 km (500 mi), to prevent damage to the engine, axle or other parts.
- Then, during the first 800 km (500 mi) trailer towing, do not drive over 80 km/h (50 mph) and do not make starts at full throttle.
- Vehicles with automatic transmissions can tow in D (Drive) but M (Manual Mode) is recommended. See *Manual Mode on page 9-23*. Use a lower gear if the transmission shifts too often. For vehicles with a manual transmission, it is better not to use the highest gear.

⚠ WARNING

When towing a trailer, exhaust gases may collect at the rear of the vehicle and enter if the liftgate, trunk/hatch, or rear-most window is open.

(Continued)

WARNING (Continued)

When towing a trailer:

- Do not drive with the liftgate, trunk/hatch, or rear-most window open.
- Fully open the air outlets on or under the instrument panel.
- Also adjust the Climate Control system to a setting that brings in only outside air. See “Climate Control Systems” in the Index.

For more information about Carbon Monoxide, see *Engine Exhaust on page 9-20*.

Towing a trailer requires a certain amount of experience. The combination you are driving is longer and not as responsive as the vehicle itself. Get acquainted with the handling and braking of the rig before setting out for the open road.

Downloaded from www.Manualslib.com manuals search engine

Before starting, check all trailer hitch parts and attachments, safety chains, electrical connectors, lamps, tires and mirrors. If the trailer has electric brakes, start the combination moving and then apply the trailer brake controller by hand to be sure the brakes work.

During the trip, check occasionally to be sure that the load is secure and the lamps and any trailer brakes still work.

Towing with a Stability Control System

When towing, the sound of the stability control system might be heard. The system is reacting to the vehicle movement caused by the trailer, which mainly occurs during cornering. This is normal when towing heavier trailers.

Following Distance

Stay at least twice as far behind the vehicle ahead as you would when driving the vehicle without a trailer. This can help to avoid situations that require heavy braking and sudden turns.

Passing

More passing distance is needed when towing a trailer. Because the rig is longer, it is necessary to go farther beyond the passed vehicle before returning to the lane.

Backing Up

Hold the bottom of the steering wheel with one hand. To move the trailer to the left, move your hand to the left. To move the trailer to the right, move your hand to the right. Always back up slowly and, if possible, have someone guide you.

Making Turns

Notice: **Making very sharp turns while trailering could cause the trailer to come in contact with the vehicle. The vehicle could be damaged. Avoid making very sharp turns while trailering.**

When turning with a trailer, make wider turns than normal so the trailer will not strike soft shoulders, curbs, road signs, trees or other objects. Use the turn signal well in advance and avoid jerky or sudden maneuvers.

Turn Signals When Towing a Trailer

The turn signal indicators on the instrument cluster flash whenever signaling a turn or lane change. Properly hooked up, the trailer lamps also flash, telling other drivers the vehicle is turning, changing lanes or stopping.

When towing a trailer, the arrows on the instrument cluster flash for turns even if the bulbs on the trailer are burned out. Check occasionally to be sure the trailer bulbs are still working.

Driving on Grades

Reduce speed and shift to a lower gear before starting down a long or steep downgrade.

Downloaded from www.Manualslib.com manuals search engine

If the transmission is not shifted down, the brakes might have to be used so much that they would get hot and no longer work well.

The vehicle can tow in D (Drive). Use a lower gear if the transmission shifts too often.

When towing at high altitude on steep uphill grades, engine coolant boils at a lower temperature than at normal altitudes. If the engine is turned off immediately after towing at high altitude on steep uphill grades, the vehicle could show signs similar to engine overheating. To avoid this, let the engine run while parked, preferably on level ground, with the transmission in P (Park) for a few minutes before turning the engine off. If the overheat warning comes on, see *Engine Overheating on page 10-17*.

Parking on Hills

⚠ WARNING

Parking the vehicle on a hill with the trailer attached can be dangerous. If something goes wrong, the rig could start to move. People can be injured, and both the vehicle and the trailer can be damaged. When possible, always park the rig on a flat surface.

If parking the rig on a hill:

1. Press the brake pedal, but do not shift into P (Park) yet. Turn the wheels into the curb if facing downhill or into traffic if facing uphill.
2. Have someone place chocks under the trailer wheels.
3. When the wheel chocks are in place, release the brake pedal until the chocks absorb the load.
4. Reapply the brake pedal. Then apply the parking brake and shift into P (Park) for vehicles with an automatic transmission or into gear for vehicles with a manual transmission.
5. Release the brake pedal.

Leaving After Parking on a Hill

1. Apply and hold the brake pedal while you:
   - Start the engine.
   - Shift into a gear.
   - Release the parking brake.
2. Let up on the brake pedal.
3. Drive slowly until the trailer is clear of the chocks.
4. Stop and have someone pick up and store the chocks.

Downloaded from www.Manualslib.com manuals search engine

Maintenance When Trailer Towing

The vehicle needs service more often when pulling a trailer. See the *Maintenance Schedule on page 11-2*. Things that are especially important in trailer operation are automatic transmission fluid, engine oil, axle lubricant, belts, cooling system and brake system. Inspect these before and during the trip.

Check periodically to see that all hitch nuts and bolts are tight.

Engine Cooling When Trailer Towing

The cooling system may temporarily overheat during severe operating conditions. See *Engine Overheating on page 10-17*.

Trailer Towing

Before pulling a trailer, there are three important considerations that have to do with weight:

- The weight of the trailer.
- The weight of the trailer tongue.
- The total weight on your vehicle's tires.

Weight of the Trailer

How heavy can a trailer safely be?

It should never weigh more than 454 kg (1,000 lbs). But even that can be too heavy.

It depends on how the rig is used. For example, speed, altitude, road grades, outside temperature, and how much the vehicle is used to pull a trailer are all important. It can depend on any special equipment on the vehicle, and the amount of tongue weight the vehicle can carry. See “Weight of the Trailer Tongue” later in this section.

Maximum trailer weight is calculated assuming only the driver is in the tow vehicle and it has all the required trailering equipment. The weight of additional optional equipment, passengers, and cargo in the tow vehicle must be subtracted from the maximum trailer weight.

Ask your dealer for trailering information or advice, or write us at our Customer Assistance Offices. See *Customer Assistance Offices on page 13-3*.

Weight of the Trailer Tongue

The tongue load (1) of any trailer is an important weight to measure because it affects the total gross weight of the vehicle. The Gross Vehicle Weight (GVW) includes the curb weight of the vehicle, any cargo carried in it, and the people who will be riding in the vehicle.

Downloaded from www.Manualslib.com manuals search engine

If there are a lot of options, equipment, passengers, or cargo in the vehicle, it will reduce the tongue weight the vehicle can carry, which will also reduce the trailer weight the vehicle can tow. If towing a trailer, the tongue load must be added to the GVW because the vehicle will be carrying that weight, too. See *Vehicle Load Limits on page 9-9*.

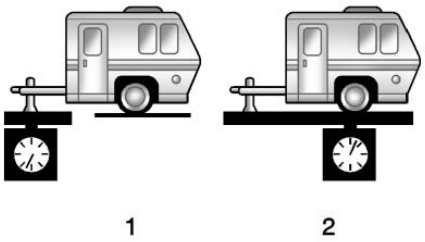

The trailer tongue (1) should weigh 10 to 15 percent of the total loaded trailer weight (2).

After loading the trailer, weigh the trailer and then the tongue, separately, to see if the weights are proper. If they are not, adjustments might be made by moving some items around in the trailer.

Total Weight on Your Vehicle's Tires

Be sure the vehicle's tires are inflated to the upper limit for cold tires. These numbers can be found on the Tire and Loading Information label. See *Vehicle Load Limits on page 9-9*. Make sure not to go over the GVW limit for the vehicle, including the weight of the trailer tongue.

Towing Equipment

Hitches

Use the correct hitch equipment. See your dealer or a hitch dealer for assistance.

- The rear bumper on the vehicle is not intended for hitches. Do not attach rental hitches or other bumper-type hitches to it. Use only a frame-mounted hitch that does not attach to the bumper.
- Will any holes be made in the body of the vehicle when the trailer hitch is installed? If so, seal the holes when the hitch is removed. If the holes are not sealed, dirt, water, and deadly carbon monoxide (CO) from the exhaust can get into the vehicle. See *Engine Exhaust on page 9-20*.

Safety Chains

Always attach chains between the vehicle and the trailer. Cross the safety chains under the tongue of the trailer to help prevent the tongue from contacting the road if it becomes separated from the hitch. Leave enough slack so the rig can turn. Never allow safety chains to drag on the ground.

Downloaded from www.Manualslib.com manuals search engine

Trailer Brakes

Does the trailer have its own brakes? Be sure to read and follow the instructions for the trailer brakes so they are installed, adjusted, and maintained properly.

Because the vehicle has antilock brakes, do not tap into the vehicle's brake system. If this is done, both brake systems will not work well, or at all.

Conversions and Add-Ons

Add-On Electrical Equipment

Notice: **Some electrical equipment can damage the vehicle or cause components to not work and would not be covered by the warranty. Always check with your dealer before adding electrical equipment.**

Add-on equipment can drain the vehicle's 12-volt battery, even if the vehicle is not operating.

The vehicle has an airbag system. Before attempting to add anything electrical to the vehicle, see *Servicing the Airbag-Equipped Vehicle on page 3-30* and *Adding Equipment to the Airbag-Equipped Vehicle on page 3-30*.

Downloaded from www.Manualslib.com manuals search engine

✍ NOTES

Downloaded from www.Manualslib.com manuals search engine

Vehicle Care

General Information
General Information 10-2
California Proposition 65 Warning 10-3
California Perchlorate Materials Requirements 10-3
Accessories and Modifications 10-3

Vehicle Checks
Doing Your Own Service Work 10-4
Hood 10-4
Engine Compartment Overview 10-6
Engine Oil 10-7
Engine Oil Life System 10-9
Automatic Transmission Fluid 10-10
Manual Transmission Fluid 10-11
Hydraulic Clutch 10-11
Engine Air Cleaner/Filter 10-11
Cooling System 10-13
Engine Coolant 10-13
Engine Overheating 10-17
Washer Fluid 10-18
Brakes 10-19
Brake Fluid 10-20
Battery 10-21
Starter Switch Check 10-22
Automatic Transmission Shift Lock Control Function Check 10-22
Ignition Transmission Lock Check 10-23
Park Brake and P (Park) Mechanism Check 10-23
Wiper Blade Replacement 10-23

Headlamp Aiming
Headlamp Aiming 10-25

Bulb Replacement
Bulb Replacement 10-25
Halogen Bulbs 10-25
Headlamps, Front Turn Signal, Sidemarker, and Parking Lamps 10-25
Fog Lamps 10-27
Taillamps, Turn Signal, Sidemarker, and Stoplamps 10-27
Back-Up Lamps 10-29
License Plate Lamp 10-29
Replacement Bulbs 10-30

Electrical System
Electrical System Overload 10-30
Fuses and Circuit Breakers 10-31
Engine Compartment Fuse Block 10-31
Instrument Panel Fuse Block 10-34

Wheels and Tires
Tires 10-37
All-Season Tires 10-37
Winter Tires 10-38
Summer Tires 10-38
Tire Sidewall Labeling 10-38
Tire Designations 10-40
Tire Terminology and Definitions 10-40
Tire Pressure 10-43
Tire Pressure Monitor System 10-44
Tire Pressure Monitor Operation 10-45
Tire Inspection 10-48

Downloaded from www.Manualslib.com manuals search engine

Tire Rotation 10-49
When It Is Time for New Tires 10-50
Buying New Tires 10-51
Different Size Tires and Wheels 10-53
Uniform Tire Quality Grading 10-53
Wheel Alignment and Tire Balance 10-55
Wheel Replacement 10-55
Tire Chains 10-56
If a Tire Goes Flat 10-56
Tire Sealant and Compressor Kit 10-58
Storing the Tire Sealant and Compressor Kit 10-65
Tire Changing 10-65
Full-Size Spare Tire 10-72

Jump Starting
Jump Starting 10-73

Towing
Towing the Vehicle 10-75
Recreational Vehicle Towing 10-76

Appearance Care
Exterior Care 10-78
Interior Care 10-82
Floor Mats 10-85

General Information

For service and parts needs, visit your dealer. You will receive genuine GM parts and GM-trained and supported service people.

Genuine GM parts have one of these marks:

ACDelco®

Genuine GM | Parts

GM Accessories

Downloaded from www.Manualslib.com manuals search engine

California Proposition 65 Warning

Most motor vehicles, including this one, contain and/or emit chemicals known to the State of California to cause cancer and birth defects or other reproductive harm. Engine exhaust, many parts and systems, many fluids, and some component wear by-products contain and/or emit these chemicals.

California Perchlorate Materials Requirements

Certain types of automotive applications, such as airbag initiators, safety belt pretensioners, and lithium batteries contained in Remote Keyless Entry transmitters, may contain perchlorate materials. Special handling may be necessary. For additional information, see www.dtsc.ca.gov/hazardouswaste/perchlorate.

Accessories and Modifications

Adding non-dealer accessories or making modifications to the vehicle can affect vehicle performance and safety, including such things as airbags, braking, stability, ride and handling, emissions systems, aerodynamics, durability, and electronic systems like antilock brakes, traction control, and stability control. These accessories or modifications could even cause malfunction or damage not covered by the vehicle warranty.

Damage to vehicle components resulting from modifications or the installation or use of non-GM certified parts, including control module or software modifications, is not covered under the terms of the vehicle warranty and may affect remaining warranty coverage for affected parts.

GM Accessories are designed to complement and function with other systems on the vehicle. See your dealer to accessorize the vehicle using genuine GM Accessories installed by a dealer technician.

Also, see *Adding Equipment to the Airbag-Equipped Vehicle on page 3-30*.

Downloaded from www.Manualslib.com manuals search engine

Vehicle Checks

Doing Your Own Service Work

⚠ WARNING

It can be dangerous to work on your vehicle if you do not have the proper knowledge, service manual, tools, or parts. Always follow owner manual procedures and consult the service manual for your vehicle before doing any service work.

If doing some of your own service work, use the proper service manual. It tells you much more about how to service the vehicle than this manual can. To order the proper service manual, see *Service Publications Ordering Information on page 13-11*.

This vehicle has an airbag system. Before attempting to do your own service work, see *Servicing the Airbag-Equipped Vehicle on page 3-30*.

Keep a record with all parts receipts and list the mileage and the date of any service work performed. See *Maintenance Records on page 11-14*.

Notice: **Even small amounts of contamination can cause damage to vehicle systems. Do not allow contaminants to contact the fluids, reservoir caps, or dipsticks.**

Hood

To open the hood:

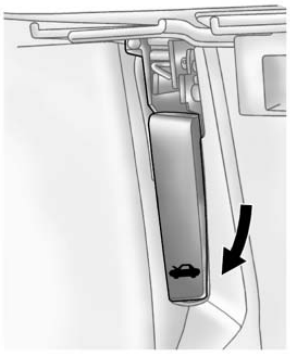

1. Pull up on the hood release handle. It is located inside the vehicle to the left of the steering column.

Downloaded from www.Manualslib.com manuals search engine

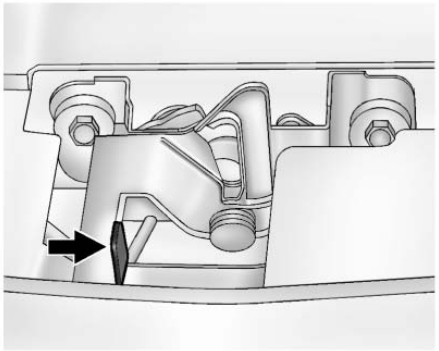

2. Go to the front of the vehicle and push the secondary hood release handle toward the driver side of the vehicle.

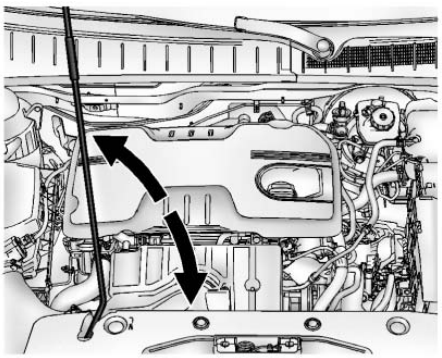

3. Lift the hood and release the hood prop from its retainer, located above the radiator. Securely place the hood prop into the slot on the underside of the hood.

To close the hood:

1. Before closing the hood, be sure all the filler caps are on properly. Then, lift the hood to relieve pressure on the hood prop. Remove the hood prop from the slot on the underside of the hood and return the prop to its retainer. The prop rod must click into place when returning it to the retainer to prevent hood damage.
2. Lower the hood 30 cm (12 in) above the vehicle and release it so it fully latches. Check to make sure the hood is closed and repeat the process if necessary.

Downloaded from www.Manualslib.com manuals search engine

Engine Compartment Overview

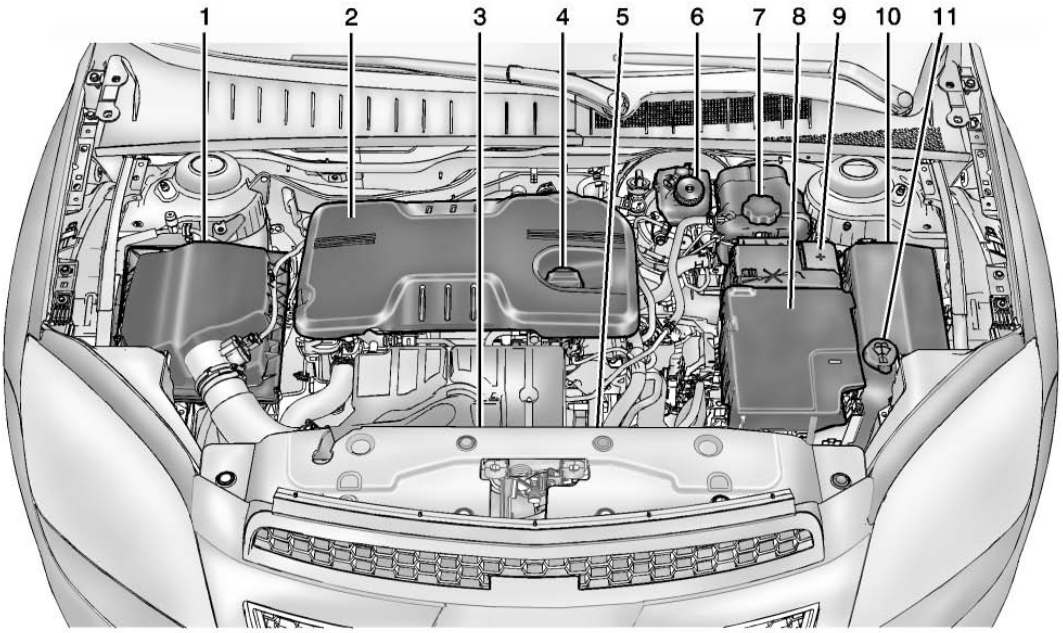

Downloaded from www.Manualslib.com manuals search engine

1. *Engine Air Cleaner/Filter on page 10-11*.
2. Engine Cover.
3. Engine Cooling Fan (Out of View). See *Cooling System on page 10-13*.
4. Engine Oil Fill Cap. See *Engine Oil on page 10-7*.
5. Engine Oil Dipstick (Out of View). See *Engine Oil on page 10-7*.
6. Brake Fluid Reservoir. See *Brakes on page 10-19*.
7. Engine Coolant Surge Tank and Pressure Cap. See *Engine Coolant on page 10-13*.
8. *Battery on page 10-21* (Out of View).
9. Remote Positive (+) Terminal. See *Jump Starting on page 10-73*.
10. *Engine Compartment Fuse Block on page 10-31*.
11. Windshield Washer Fluid Reservoir. See *Washer Fluid on page 10-18*.

Engine Oil

To ensure proper engine performance and long life, careful attention must be paid to engine oil. Following these simple, but important steps will help protect your investment:

- Always use engine oil approved to the proper specification and of the proper viscosity grade. See “Selecting the Right Engine Oil” in this section.
- Check the engine oil level regularly and maintain the proper oil level. See “Checking Engine Oil” and “When to Add Engine Oil” in this section.
- Change the engine oil at the appropriate time. See *Engine Oil Life System on page 10-9*.
- Always dispose of engine oil properly. See “What to Do with Used Oil” in this section.

Checking Engine Oil

It is a good idea to check the engine oil level at each fuel fill. In order to get an accurate reading, the vehicle must be on level ground. The engine oil dipstick handle is a loop. See *Engine Compartment Overview on page 10-6* for the location of the engine oil dipstick.

Obtaining an accurate oil level reading is essential:

1. If the engine has been running recently, turn off the engine and allow several minutes for the oil to drain back into the oil pan. Checking the oil level too soon after engine shutoff will not provide an accurate oil level reading.

Downloaded from www.Manualslib.com manuals search engine

⚠ WARNING

The engine oil dipstick handle may be hot; it could burn you. Use a towel or glove to touch the dipstick handle.

2. Pull out the dipstick and clean it with a paper towel or cloth, then push it back in all the way. Remove it again, keeping the tip down, and check the level.

When to Add Engine Oil

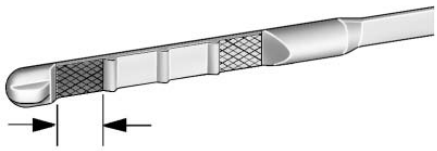

If the oil is below the cross-hatched area at the tip of the dipstick, add 1 L (1 qt) of the recommended oil and then recheck the level. See "Selecting the Right Engine Oil" in this section for an explanation of what kind of oil to use. For engine oil crankcase capacity, see *Capacities and Specifications on page 12-2*.

Notice: **Do not add too much oil. Oil levels above or below the acceptable operating range shown on the dipstick are harmful to the engine. If you find that you have an oil level above the operating range, i.e., the engine has so much oil that the oil level gets above the cross-hatched area that shows the proper operating range, the engine could be damaged. You should drain out the excess oil or limit driving of the vehicle and seek a service professional to remove the excess amount of oil.**

See *Engine Compartment Overview on page 10-6* for the location of the engine oil fill cap.

Add enough oil to put the level somewhere in the proper operating range. Push the dipstick all the way back in when through.

Selecting the Right Engine Oil

Selecting the right engine oil depends on both the proper oil specification and viscosity grade. See *Recommended Fluids and Lubricants on page 11-12*.

Specification

Use and ask for licensed engine oils with the dexos1® approved certification mark. Engine oils meeting the requirements for the vehicle should have the dexos1 approved certification mark. This certification mark indicates that the oil has been approved to the dexos1 specification.

Notice: **Failure to use the recommended engine oil or equivalent can result in engine damage not covered by the**

Downloaded from www.Manualslib.com manuals search engine

vehicle warranty. Check with your dealer or service provider on whether the oil is approved to the dexos1 specification.

Viscosity Grade

SAE 5W-30 is the best viscosity grade for the vehicle. Do not use other viscosity grade oils such as SAE 10W-30, 10W-40, or 20W-50.

Cold Temperature Operation: In an area of extreme cold, where the temperature falls below −29°C (−20°F), an SAE 0W-30 oil may be used. An oil of this viscosity grade will provide easier cold starting for the engine at extremely low temperatures. When selecting an oil of the appropriate viscosity grade, always select an oil of the correct specification. See “Specification” earlier in this section for more information.

Engine Oil Additives/Engine Oil Flushes

Do not add anything to the oil. The recommended oils with the dexos specification and displaying the dexos certification mark are all that is needed for good performance and engine protection.

Engine oil system flushes are not recommended and could cause engine damage not covered by the vehicle warranty.

What to Do with Used Oil

Used engine oil contains certain elements that can be unhealthy for your skin and could even cause cancer. Do not let used oil stay on your skin for very long. Clean your skin and nails with soap and water, or a good hand cleaner. Wash or properly dispose of clothing or rags containing used engine oil. See the manufacturer's warnings about the use and disposal of oil products.

Used oil can be a threat to the environment. If you change your own oil, be sure to drain all the oil from the filter before disposal. Never dispose of oil by putting it in the trash or pouring it on the ground, into sewers, or into streams or bodies of water. Recycle it by taking it to a place that collects used oil.

Engine Oil Life System

When to Change Engine Oil

This vehicle has a computer system that indicates when to change the engine oil and filter. This is based on a combination of factors which include engine revolutions, engine temperature, and miles driven. Based on driving conditions, the mileage at which an oil change is indicated can vary considerably. For the oil life system to work properly, the system must be reset every time the oil is changed.

Downloaded from www.Manualslib.com manuals search engine

When the system has calculated that oil life has been diminished, it indicates that an oil change is necessary. A CHANGE ENGINE OIL SOON message comes on. See *Engine Oil Messages on page 5-26*. Change the oil as soon as possible within the next 1 000 km (600 mi). It is possible that, if driving under the best conditions, the oil life system might indicate that an oil change is not necessary for up to a year. The engine oil and filter must be changed at least once a year and, at this time, the system must be reset. Your dealer has trained service people who will perform this work and reset the system. It is also important to check the oil regularly over the course of an oil drain interval and keep it at the proper level.

If the system is ever reset accidentally, the oil must be changed at 5 000 km (3,000 mi) since the last oil change. Remember to reset the oil life system whenever the oil is changed.

How to Reset the Engine Oil Life System

Reset the system whenever the engine oil is changed so that the system can calculate the next engine oil change. To reset the system:

1. Turn the ignition to ON/RUN with the engine off.
2. Press the DIC MENU button on the turn signal lever to enter the Vehicle Information Menu. Use the thumbwheel to scroll through the menu items until you reach REMAINING OIL LIFE.
3. Press the SET/CLR button to reset the oil life at 100%.
4. Turn the ignition to LOCK/OFF.

The system is reset when the CHANGE ENGINE OIL SOON message is off and the REMAINING OIL LIFE 100% message is displayed.

If the CHANGE ENGINE OIL SOON message comes back on when the vehicle is started, the engine oil life system has not been reset. Repeat the procedure.

Automatic Transmission Fluid

How to Check Automatic Transmission Fluid

It is not necessary to check the transmission fluid level. A transmission fluid leak is the only reason for fluid loss. If a leak occurs, take the vehicle to your dealer and have it repaired as soon as possible.

There is a special procedure for checking and changing the transmission fluid. Because this procedure is difficult, this should be done at your dealer. Contact your dealer for additional information or the procedure can be found in the service manual. To purchase a

Downloaded from www.Manualslib.com manuals search engine

service manual, see *Service Publications Ordering Information on page 13-11*.

Change the fluid and filter at the intervals listed in *Maintenance Schedule on page 11-2*, and be sure to use the fluid listed in *Recommended Fluids and Lubricants on page 11-12*.

Manual Transmission Fluid

How to Check Manual Transmission Fluid

It is not necessary to check the manual transmission fluid level. A transmission fluid leak is the only reason for fluid loss. If a leak occurs, take the vehicle to your dealer and have it repaired as soon as possible. See *Recommended Fluids and Lubricants on page 11-12* for the proper fluid to use.

Hydraulic Clutch

For vehicles with a manual transmission, it is not necessary to regularly check brake/clutch fluid unless there is a leak suspected. Adding fluid will not correct a leak. A fluid loss in this system could indicate a problem. Have the system inspected and repaired.

When to Check and What to Use

The brake/hydraulic clutch fluid reservoir cap has this symbol on it. The common brake/clutch fluid reservoir is filled with DOT 4 brake fluid as indicated on the reservoir cap. See *Engine Compartment Overview on page 10-6* for reservoir location.

How to Check and Add Fluid

Visually check the brake/clutch fluid reservoir to make sure the fluid level is at the MIN (minimum) line on the side of the reservoir. The brake/hydraulic clutch fluid system should be closed and sealed.

Do not remove the cap to check the fluid level or to top-off the fluid level. Remove the cap only when necessary to add the proper fluid until the level reaches the MIN line.

Engine Air Cleaner/Filter

See *Engine Compartment Overview on page 10-6* for the location of the engine air cleaner/filter.

When to Inspect the Engine Air Cleaner/Filter

Inspect or replace the air cleaner/filter at the scheduled maintenance intervals. See *Maintenance Schedule on page 11-2* for more information. If driving in dusty/dirty conditions, inspect the filter at each engine oil change.

Downloaded from www.Manualslib.com manuals search engine

How to Inspect the Engine Air Cleaner/Filter

To inspect the air cleaner/filter, remove the filter from the vehicle and lightly shake the filter to release loose dust and dirt. If the filter remains covered with dirt, a new filter is required.

To inspect or replace the engine air cleaner/filter:

1. Open the hood. See *Hood on page 10-4*.
2. Locate the air filter housing on the passenger side of the engine compartment. See *Engine Compartment Overview on page 10-6*.

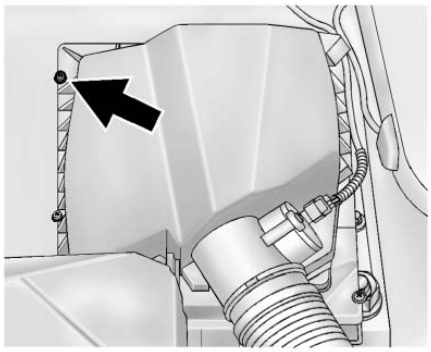

3. Remove the six air cleaner housing cover screws.
4. Pull straight up on the cover, and while holding the cover, remove the air cleaner filter.
5. Inspect or replace the air cleaner filter.

How to Reinstall Engine Air Cleaner/Filter

1. Install the air cleaner filter into the air cleaner housing. The outer air cleaner filter seal must be fitted properly in the air cleaner housing.
2. Align the air cleaner housing cover tabs to the air cleaner housing.
3. Install the air cleaner housing cover using the six screws.

⚠ WARNING

Operating the engine with the air cleaner/filter off can cause you or others to be burned. The air cleaner not only cleans the air; it helps to stop flames if the engine backfires. Use caution when working on the engine and do not drive with the air cleaner/filter off.

Notice: **If the air cleaner/filter is off, dirt can easily get into the engine, which could damage it. Always have the air cleaner/filter in place when you are driving.**

Downloaded from www.Manualslib.com manuals search engine

Cooling System

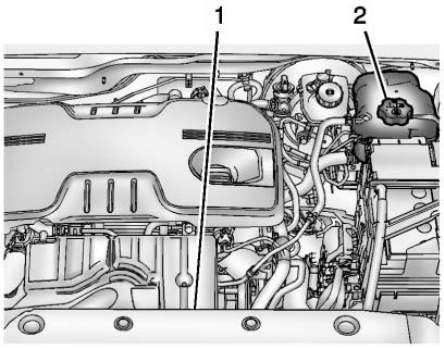

1. Engine Cooling Fan (Out of View)
2. Engine Coolant Surge Tank and Pressure Cap

⚠ WARNING

An electric engine cooling fan under the hood can start up even when the engine is not running and can cause injury. Keep hands, clothing, and tools away from any underhood electric fan.

If the coolant inside the coolant surge tank is boiling, do not do anything else until it cools down. The vehicle should be parked on a level surface.

The coolant level should be at the COLD FILL line. If it is not, the vehicle may have a leak at the radiator hoses, heater hoses, radiator, water pump, or somewhere else in the cooling system.

⚠ WARNING

Heater and radiator hoses, and other engine parts, can be very hot. Do not touch them. If you do, you can be burned.

Do not run the engine if there is a leak. If you run the engine, it could lose all coolant. That could cause an engine fire, and you could be burned. Get any leak fixed before you drive the vehicle.

If there seems to be no leak, with the engine on, check to see if the electric engine cooling fan is running. If the engine is overheating, the fan should be running. If it is not, the vehicle needs service. Turn off the engine.

Notice: **Using coolant other than DEX-COOL® can cause premature engine, heater core, or radiator corrosion. In addition, the engine coolant could require changing sooner, at 50 000 km (30,000 mi) or 24 months, whichever occurs first. Any repairs would not be covered by the vehicle warranty. Always use DEX-COOL (silicate-free) coolant in the vehicle.**

Engine Coolant

The cooling system in the vehicle is filled with DEX-COOL® engine coolant. This coolant is designed to remain in the vehicle for 5 years or 240 000 km (150,000 mi), whichever occurs first.

Downloaded from www.Manualslib.com manuals search engine

The following explains the cooling system and how to check and add coolant when it is low. If there is a problem with engine overheating, see *Engine Overheating on page 10-17*.

What to Use

⚠ WARNING

Adding only plain water or some other liquid to the cooling system can be dangerous. Plain water and other liquids, can boil before the proper coolant mixture will. The coolant warning system is set for the proper coolant mixture. With plain water or the wrong mixture, the engine could get too hot but you would not get the overheat warning. The engine could catch fire and you or others could be burned. Use a 50/50 mixture of clean, drinkable water and DEX-COOL coolant.

Use a 50/50 mixture of clean, drinkable water and DEX-COOL coolant. If using this mixture, nothing else needs to be added. This mixture:

- Gives freezing protection down to −37°C (−34°F), outside temperature.
- Gives boiling protection up to 129°C (265°F), engine temperature.
- Protects against rust and corrosion.
- Will not damage aluminum parts.
- Helps keep the proper engine temperature.

Notice: **If an improper coolant mixture is used, the engine could overheat and be badly damaged. The repair cost would not be covered by the vehicle warranty. Too much water in the mixture can freeze and crack the engine, radiator, heater core, and other parts.**

Never dispose of engine coolant by putting it in the trash, pouring it on the ground, or into sewers, streams, or bodies of water. Have the coolant changed by an authorized service center, familiar with legal requirements regarding used coolant disposal. This will help protect the environment and your health.

Checking Coolant

The vehicle must be on a level surface when checking the coolant level.

Check to see if coolant is visible in the coolant surge tank. If the coolant inside the coolant surge tank is boiling, do not do anything else until it cools down. If coolant is visible but the coolant level is not at or above the COLD FILL line, add a 50/50 mixture of clean, drinkable water and DEX-COOL coolant at the coolant surge tank, but be sure the cooling system is cool before this is done. See *Cooling System on page 10-13*.

Downloaded from www.Manualslib.com manuals search engine

The coolant surge tank is in the engine compartment on the driver side of the vehicle. See *Engine Compartment Overview on page 10-6*.

How to Add Coolant to the Coolant Surge Tank

Notice: **This vehicle has a specific coolant fill procedure. Failure to follow this procedure could cause the engine to overheat and be severely damaged.**

If you have not found a problem yet, check to see if coolant is visible in the coolant surge tank. If coolant is visible but the coolant level is not at the COLD FILL line, add a 50/50 mixture of clean, drinkable water and DEX-COOL coolant at the coolant surge tank, but be sure the cooling system, including the coolant surge tank pressure cap, is cool before you do it. See *Engine Overheating on page 10-17*.

⚠ WARNING

Steam and scalding liquids from a hot cooling system can blow out and burn you badly. They are under pressure, and if you turn the coolant surge tank pressure cap — even a little — they can come out at high speed. Never turn the cap when the cooling system, including the coolant surge tank pressure cap, is hot. Wait for the cooling system and coolant surge tank pressure cap to cool if you ever have to turn the pressure cap.

⚠ WARNING

Adding only plain water or some other liquid to the cooling system can be dangerous. Plain water and other liquids, can boil before the proper coolant mixture will.

(Continued)

WARNING (Continued)

The coolant warning system is set for the proper coolant mixture. With plain water or the wrong mixture, the engine could get too hot but you would not get the overheat warning. The engine could catch fire and you or others could be burned. Use a 50/50 mixture of clean, drinkable water and DEX-COOL coolant.

⚠ WARNING

You can be burned if you spill coolant on hot engine parts. Coolant contains ethylene glycol and it will burn if the engine parts are hot enough. Do not spill coolant on a hot engine.

Downloaded from www.Manualslib.com manuals search engine

Notice: **In cold weather, water can freeze and crack the engine, radiator, heater core and other parts. Use the recommended coolant and the proper coolant mixture.**

1. Remove the coolant surge tank pressure cap when the cooling system, including the coolant surge tank pressure cap and upper radiator hose, is no longer hot.

   Turn the pressure cap slowly counterclockwise about one-quarter of a turn. If you hear a hiss, wait for that to stop. This will allow any pressure still left to be vented out the discharge hose.

2. Keep turning the pressure cap slowly, and remove it.

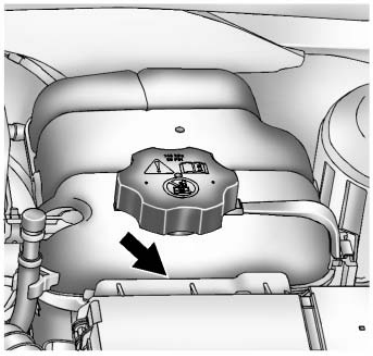

3. Fill the coolant surge tank with the proper DEX-COOL coolant mixture, to the cold fill line mark below the ISO symbol. The location of the ISO symbol is indicated by the arrow.

4. With the coolant surge tank pressure cap off, start the engine and let it run until the upper radiator hose can be felt getting hot. Watch out for the engine cooling fan.

   By this time, the coolant level inside the coolant surge tank may be lower. If the level is lower, add more of the proper DEX-COOL coolant mixture to the coolant surge tank until the level reaches the cold fill line.

5. Replace the pressure cap tightly.

Check the level in the coolant surge tank when the cooling system has cooled down. If the coolant is not at the proper level, repeat Steps 1–3 and reinstall the pressure cap. If the coolant still is not at the proper level when the system cools down again, see your dealer.

Downloaded from www.Manualslib.com manuals search engine

Engine Overheating

The vehicle has an engine coolant temperature gauge to warn of engine overheating. See *Engine Coolant Temperature Gauge on page 5-10*.

The decision may be made not to lift the hood when this warning appears, but instead get service help right away. See *Roadside Assistance Program on page 13-5*.

If the decision to lift the hood is made, make sure the vehicle is parked on a level surface.

Then check to see if the engine cooling fan is running. If the engine is overheating, the fan should be running. If they are not, do not continue to run the engine and have the vehicle serviced.

Notice: **Engine damage from running the engine without coolant is not covered by the warranty.**

If Steam is Coming from the Engine Compartment

⚠ WARNING

Steam from an overheated engine can burn you badly, even if you just open the hood. Stay away from the engine if you see or hear steam coming from it. Just turn it off and get everyone away from the vehicle until it cools down. Wait until there is no sign of steam or coolant before you open the hood.

If you keep driving when the engine is overheated, the liquids in it can catch fire. You or others could be badly burned. Stop the engine if it overheats, and get out of the vehicle until the engine is cool.

If No Steam is Coming from the Engine Compartment

If the engine coolant temperature gauge is in the overheat zone but no steam can be seen or heard, the problem may not be too serious. Sometimes the engine can get a little too hot when the vehicle:

- Climbs a long hill on a hot day.
- Stops after high-speed driving.
- Idles for long periods in traffic.
- Tows a trailer.

If the engine coolant temperature gauge is in the overheat zone with no sign of steam:

1. Turn the air conditioning off.
2. Turn the heater on to the highest temperature and to the highest fan speed. Open the windows as necessary.

Downloaded from www.Manualslib.com manuals search engine

3. In heavy traffic, let the engine idle in N (Neutral) while stopped. If it is safe to do so, pull off the road, shift to P (Park) or N (Neutral) and let the engine idle.

If the engine coolant temperature gauge is no longer in the overheat zone, the vehicle can be driven. Continue to drive the vehicle slowly for about 10 minutes. Keep a safe vehicle distance from the vehicle in front. If the engine coolant temperature gauge does not go into the overheat zone, continue to drive normally.

If the engine coolant temperature gauge is still in the overheat zone, pull over, stop, and park the vehicle right away.

If there is no sign of steam, idle the engine for three minutes while parked. If the engine coolant temperature gauge is still in the overheat zone, turn off the engine until it cools down.

Washer Fluid

What to Use

Read the manufacturer's instructions before refilling the windshield washer fluid. If operating the vehicle in an area where the temperature may fall below freezing, use a fluid that has sufficient protection against freezing.

Adding Washer Fluid

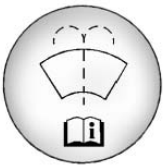

Open the cap with the washer symbol on it and add washer fluid until full. See *Engine Compartment Overview on page 10-6* for reservoir location.

Notice

- **When using concentrated washer fluid, follow the manufacturer instructions for adding water.**
- **Do not mix water with ready-to-use washer fluid. Water can cause the solution to freeze and damage the washer fluid tank and other parts of the washer system.**
- **Fill the washer fluid tank only three-quarters full when it is very cold. This allows for fluid expansion if freezing occurs, which could damage the tank if it is completely full.**
- **Do not use engine coolant (antifreeze) in the windshield washer. It can damage the windshield washer system and paint.**

Downloaded from www.Manualslib.com manuals search engine

Brakes

This vehicle has disc brakes. Disc brake pads have built-in wear indicators that make a high-pitched warning sound when the brake pads are worn and new pads are needed. The sound can come and go or be heard all the time the vehicle is moving, except when applying the brake pedal firmly.

⚠ WARNING

The brake wear warning sound means that soon the brakes will not work well. That could lead to a crash. When the brake wear warning sound is heard, have the vehicle serviced.

Notice: **Continuing to drive with worn-out brake pads could result in costly brake repair.**

Some driving conditions or climates can cause a brake squeal when the brakes are first applied or lightly applied. This does not mean something is wrong with the brakes.

Properly torqued wheel nuts are necessary to help prevent brake pulsation. When tires are rotated, inspect brake pads for wear and evenly tighten wheel nuts in the proper sequence to torque specifications in *Capacities and Specifications on page 12-2*.

Brake linings should always be replaced as complete axle sets.

Brake Pedal Travel

See your dealer if the brake pedal does not return to normal height, or if there is a rapid increase in pedal travel. This could be a sign that brake service might be required.

Brake Adjustment

Every time the brakes are applied, with or without the vehicle moving, the brakes adjust for wear.

Replacing Brake System Parts

The braking system on a vehicle is complex. Its many parts have to be of top quality and work well together if the vehicle is to have really good braking. The vehicle was designed and tested with top-quality brake parts. When parts of the braking system are replaced, be sure to get new, approved replacement parts. If this is not done, the brakes might not work properly. For example, installing disc brake pads that are wrong for the vehicle, can change the balance between the front and rear brakes — for the worse. The braking performance expected can change in many other ways if the wrong replacement brake parts are installed.

Downloaded from www.Manualslib.com manuals search engine

Brake Fluid

The brake master cylinder and, on manual transmission vehicles, the clutch hydraulic system use the same reservoir. See *Engine Compartment Overview on page 10-6* for the location of the reservoir. The reservoir is filled with DOT 4 brake fluid.

There are only two reasons why the brake fluid level in the reservoir might go down:

- The brake fluid level goes down because of normal brake lining wear. When new linings are installed, the fluid level goes back up.
- A fluid leak in the brake/clutch hydraulic system can also cause a low fluid level. Have the brake/clutch hydraulic system fixed, since a leak means that sooner or later the brakes will not work well.

Do not top off the brake/clutch fluid. Adding fluid does not correct a leak. If fluid is added when the linings are worn, there will be too much fluid when new brake linings are installed. Add or remove fluid, as necessary, only when work is done on the brake/clutch hydraulic system.

⚠ WARNING

If too much brake fluid is added, it can spill on the engine and burn, if the engine is hot enough. You or others could be burned, and the vehicle could be damaged. Add brake fluid only when work is done on the brake/clutch hydraulic system.

Checking Brake Fluid

The brake/clutch fluid can be checked without taking off the cap by looking at the brake/clutch fluid reservoir.

The fluid level should be above MIN. If it is not, have the brake/clutch hydraulic system checked to see if there is a leak.

After work is done on the brake/clutch hydraulic system, make sure the level is above MIN but not over the MAX mark.

When the brake/clutch fluid falls to a low level, the brake warning light comes on. See *Brake System Warning Light on page 5-14*.

What to Add

Use only new DOT 4 brake fluid from a sealed container. It is recommended that the brake/clutch hydraulic system be flushed and refilled with new DOT 4 fluid at a regular maintenance service every

Downloaded from www.Manualslib.com manuals search engine

two years. See *Recommended Fluids and Lubricants on page 11-12*.

Always clean the brake/clutch fluid reservoir cap and the area around the cap before removing it. This helps keep dirt from entering the reservoir.

⚠ WARNING

With the wrong kind of fluid in the brake/clutch hydraulic system, the brakes might not work well. This could cause a crash. Always use the proper brake/clutch fluid.

Notice

- **Using the wrong fluid can badly damage brake/clutch hydraulic system parts. For example, just a few drops of mineral-based oil, such as engine oil, in the brake hydraulic system can damage brake hydraulic system parts so badly that they will have to be replaced. Do not let someone put in the wrong kind of fluid.**
- **If brake fluid is spilled on the vehicle's painted surfaces, the paint finish can be damaged. Be careful not to spill brake fluid on the vehicle. If you do, wash it off immediately.**

Battery

Refer to the replacement number shown on the original battery label when a new battery is needed. See *Engine Compartment Overview on page 10-6* for battery location.

⚠ WARNING

Battery posts, terminals, and related accessories contain lead and lead compounds, chemicals known to the State of California to cause cancer and reproductive harm. Wash hands after handling.

Vehicle Storage

⚠ WARNING

Batteries have acid that can burn you and gas that can explode. You can be badly hurt if you are not careful. See *Jump Starting on page 10-73* for tips on working around a battery without getting hurt.

Infrequent Usage: Remove the black, negative (−) cable from the battery to keep the battery from running down.

Extended Storage: Remove the black, negative (−) cable from the battery or use a battery trickle charger.

Downloaded from www.Manualslib.com manuals search engine

Starter Switch Check

⚠ WARNING

When you are doing this inspection, the vehicle could move suddenly. If the vehicle moves, you or others could be injured.

1. Before starting this check, be sure there is enough room around the vehicle.
2. Firmly apply both the parking brake and the regular brake. See *Parking Brake on page 9-27*.

   Do not use the accelerator pedal, and be ready to turn off the engine immediately if it starts.
3. For automatic transmission vehicles, try to start the engine in each gear. The vehicle should start only in P (Park) or N (Neutral). If the vehicle starts in any other position, contact your dealer for service.

   For manual transmission vehicles, put the shift lever in Neutral, push the clutch pedal down halfway, and try to start the engine. The vehicle should start only when the clutch pedal is pushed down all the way to the floor. If the vehicle starts when the clutch pedal is not pushed all the way down, contact your dealer for service.

Automatic Transmission Shift Lock Control Function Check

⚠ WARNING

When you are doing this inspection, the vehicle could move suddenly. If the vehicle moves, you or others could be injured.

1. Before starting this check, be sure there is enough room around the vehicle. It should be parked on a level surface.
2. Firmly apply the parking brake. See *Parking Brake on page 9-27*.

   Be ready to apply the regular brake immediately if the vehicle begins to move.

Downloaded from www.Manualslib.com manuals search engine

3. With the engine off, turn the ignition on, but do not start the engine. Without applying the regular brake, try to move the shift lever out of P (Park) with normal effort. If the shift lever moves out of P (Park), contact your dealer for service.

Ignition Transmission Lock Check

While parked, and with the parking brake set, try to turn the ignition to LOCK/OFF in each shift lever position.

- For automatic transmission vehicles, the ignition should turn to LOCK/OFF only when the shift lever is in P (Park). The ignition key should come out only in LOCK/OFF.
- For manual transmission vehicles, the ignition key should come out only in LOCK/OFF.

Contact your dealer if service is required.

Park Brake and P (Park) Mechanism Check

⚠ WARNING

When you are doing this check, the vehicle could begin to move. You or others could be injured and property could be damaged. Make sure there is room in front of the vehicle in case it begins to roll. Be ready to apply the regular brake at once should the vehicle begin to move.

Park on a fairly steep hill, with the vehicle facing downhill. Keeping your foot on the regular brake, set the parking brake.

- To check the parking brake's holding ability: With the engine running and the transmission in N (Neutral), slowly remove foot pressure from the regular brake pedal. Do this until the vehicle is held by the parking brake only.
- To check the P (Park) mechanism's holding ability: With the engine running, shift to P (Park). Then release the parking brake followed by the regular brake.

Contact your dealer if service is required.

Wiper Blade Replacement

Front Wiper Blade Replacement

Windshield wiper blades should be inspected for wear or cracking. See *Maintenance Schedule on page 11-2*.

Replacement blades come in different types and are removed in different ways. For proper windshield wiper blade length and type, see *Maintenance Replacement Parts on page 11-13*.

Downloaded from www.Manualslib.com manuals search engine

Notice: **Allowing the wiper arm to touch the windshield when no wiper blade is installed could damage the windshield. Any damage that occurs would not be covered by your warranty. Do not allow the wiper arm to touch the windshield.**

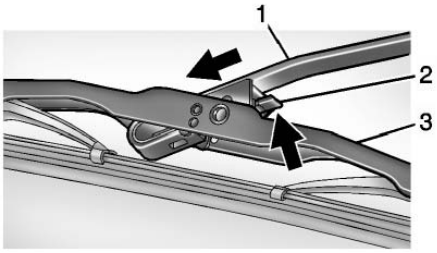

1. Wiper Arm
2. Release Lever
3. Blade Assembly

To replace the windshield wiper blade:

1. Lift the wiper arm (1) away from the windshield.
2. Push the release lever (2) to disengage the hook and push the wiper arm (1) out of the blade assembly (3).
3. Push the new blade assembly securely on the wiper arm until the release lever clicks into place.

Rear Wiper Blade Replacement

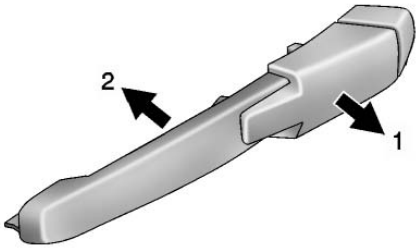

1. Pull the wiper arm a short distance away from the glass (1).
2. Push the blade away from the arm (2).

   It may require extra effort to remove the old blade.

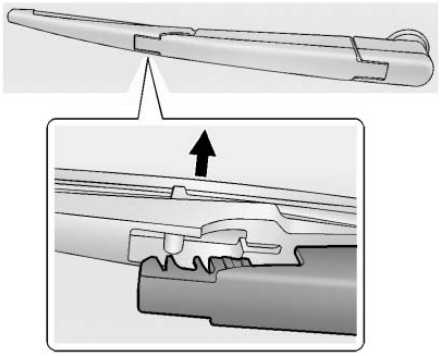

3. Once the blade pin disengages from the wiper arm, remove the wiper blade by sliding the blade off the arm.
4. Reverse the steps to install the new blade.

Downloaded from www.Manualslib.com manuals search engine

Headlamp Aiming

Headlamp aim has been preset and should need no further adjustment.

If the vehicle is damaged in a crash, the headlamp aim may be affected. If adjustment to the headlamps is necessary, see your dealer.

Bulb Replacement

For the proper type of replacement bulbs, see *Replacement Bulbs on page 10-30*.

For any bulb-changing procedure not listed in this section, contact your dealer.

Halogen Bulbs

⚠ WARNING

Halogen bulbs have pressurized gas inside and can burst if you drop or scratch the bulb. You or others could be injured. Be sure to read and follow the instructions on the bulb package.

Headlamps, Front Turn Signal, Sidemarker, and Parking Lamps

High-Beam Headlamp/ Low-Beam Headlamp

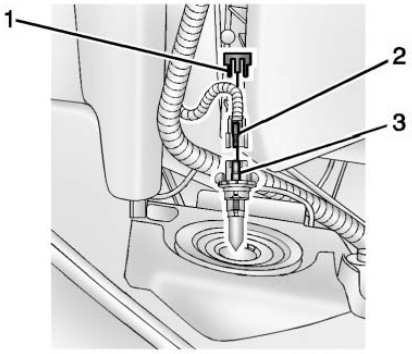

1. Connector Retaining Tab
2. Connector Release
3. Headlamp Bulb

To replace one of these bulbs:

1. Open the hood. See *Hood on page 10-4*.

Downloaded from www.Manualslib.com manuals search engine

2. Remove the connector retaining tab (1).
3. Disconnect the wiring harness connector from the bulb (3) by pressing the connector release (2) and pulling straight back.
4. Remove the bulb (3) from the headlamp assembly by turning counterclockwise and pulling straight back.
5. Install the new bulb in the headlamp assembly by turning clockwise.
6. Install the wiring harness connector to the bulb. Be sure the connector release (2) locks into place.
7. Install the connector retaining tab (1).

Parking/Turn Signal Lamp

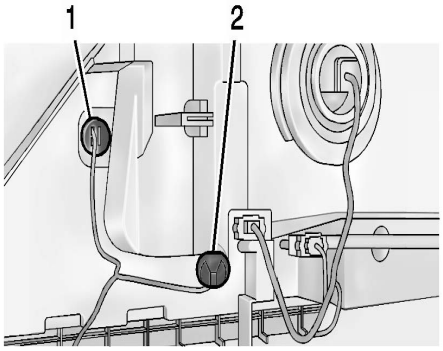

Passenger Side Shown, Driver Side Similar

1. Parking Lamp
2. Turn Signal Lamp

To replace one of these bulbs:

1. Open the hood. See *Hood on page 10-4*.
2. For the driver side bulb, remove the battery cover by firmly pulling it straight up until it releases.
3. Remove the bulb socket from the headlamp assembly by turning counterclockwise.
4. Remove the bulb from the bulb socket by pulling straight out.
5. Install the new bulb in the bulb socket.
6. Install the bulb socket into the headlamp assembly by turning clockwise.
7. On the driver side, replace the battery cover.

Sidemarker Lamp

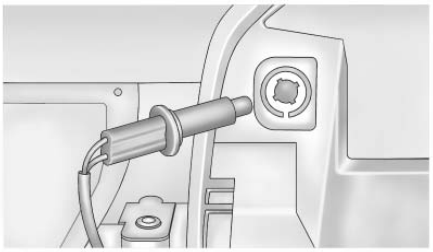

1. Remove the socket from the lamp assembly by turning counterclockwise.

Downloaded from www.Manualslib.com manuals search engine

2. Remove the bulb from the bulb socket by pulling it straight out.
3. Install the new bulb in the bulb socket.
4. Replace the bulb socket into the headlamp assembly by turning clockwise.

Fog Lamps

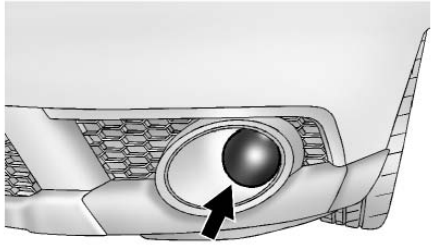

1. Locate the bulb assembly under the front fascia.
2. Remove the bulb by turning it counterclockwise and pulling it straight out of the assembly.
3. Disconnect the electrical connector from the bulb.
4. Install the new bulb by turning it clockwise into the assembly.
5. Reconnect the electrical connector to the bulb assembly.

Taillamps, Turn Signal, Sidemarker, and Stoplamps

Liftgate Inboard Taillamps

1. Open the liftgate.

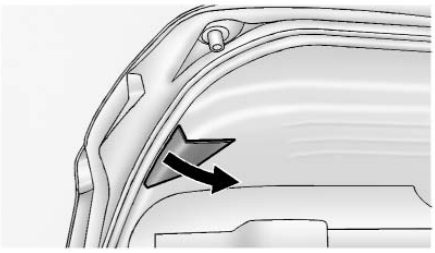

2. Remove the liftgate taillamp access cover.

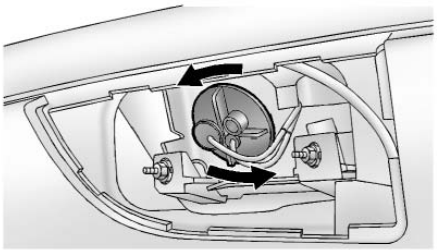

3. Remove the bulb socket by turning counterclockwise and pulling straight out.
4. Remove the bulb from the socket by pulling it straight out.
5. Install the new bulb in the bulb socket.
6. Install the bulb socket by turning clockwise.
7. Install the liftgate taillamp access cover.

Downloaded from www.Manualslib.com manuals search engine

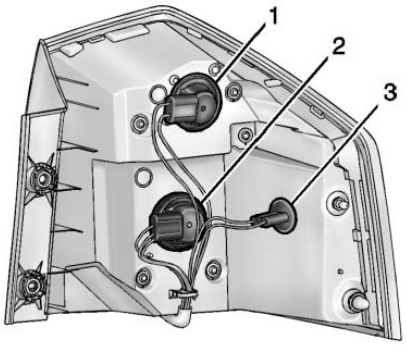

1. Turn Signal Lamp
2. Stop Lamp/Taillamp
3. Sidemarker Lamp

Stoplamp/Taillamp, Turn Signal, Back-up, and Sidemarker Lamp

1. Open the liftgate.

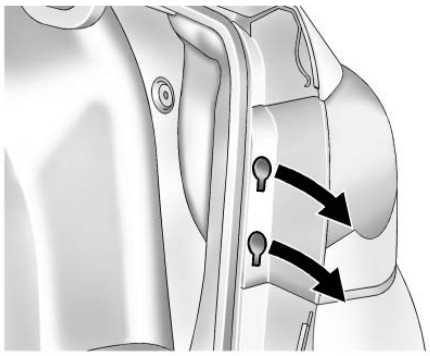

2. Open the two screw covers.

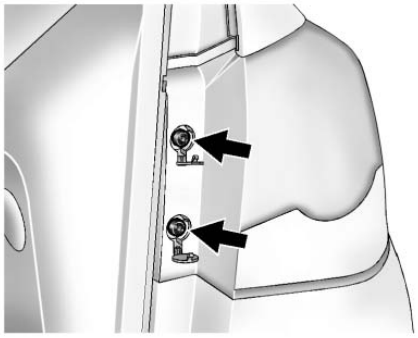

3. Remove the two screws, which secure the taillamp assembly.

Downloaded from www.Manualslib.com manuals search engine

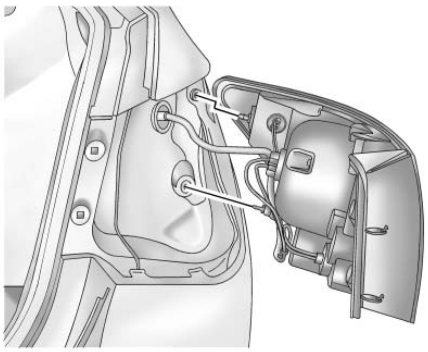

4. Remove the taillamp assembly by pulling it straight back until the two posts disengage from the grommets.
5. Remove the bulb socket from the taillamp assembly by turning it counterclockwise.
6. Remove the bulb by pulling it straight out.
7. Install a new bulb into the bulb socket.
8. Install the bulb socket into the taillamp assembly by turning it clockwise.
9. Install the taillamp assembly and tighten the two screws.
10. Close the two screw covers.

Back-Up Lamps

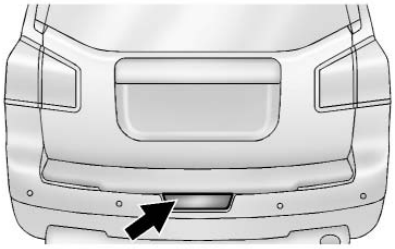

1. Locate the bulb assembly under the rear fascia.
2. Remove the bulb by turning it counterclockwise and pulling it straight out of the assembly.
3. Disconnect the electrical connector from the bulb.
4. Install the new bulb by turning it clockwise into the assembly.
5. Reconnect the electrical connector to the bulb assembly.

License Plate Lamp

To replace the license plate lamp bulb:

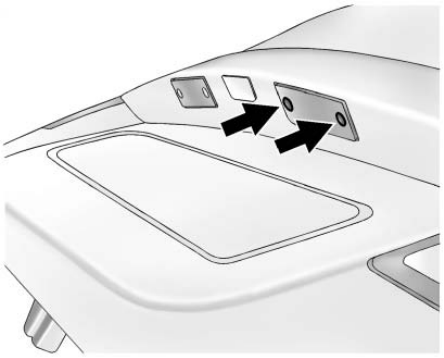

1. Remove the two screws from the license plate lamp assembly.

Downloaded from www.Manualslib.com manuals search engine

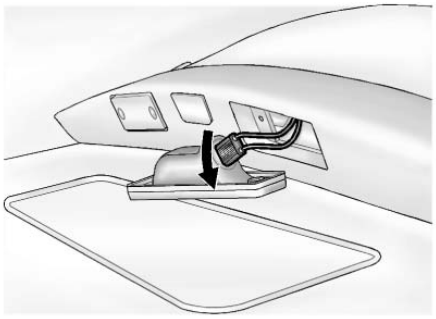

2. Turn and pull the license plate lamp assembly down.
3. Turn the bulb socket counterclockwise and pull the bulb straight out of the socket.
4. Push the new bulb into the socket.
5. Install the bulb socket by turning clockwise into the license plate lamp assembly.
6. Replace the license plate lamp assembly by using the two screws to secure.

Replacement Bulbs

Exterior Lamp	Bulb Number
Back-Up Lamp	3157K
Front Fog Lamp	H8LL
Front and Rear Sidemarker Lamp	194 (W5W)
Front Parking Lamp	194 (W5W)
Front Turn Signal Lamp	3457NAK
High-Beam/Low-Beam Headlamp	H13LL
Liftgate Taillamp	3057K
Rear Stop Lamp/ Taillamp	3057K
Rear Turn Signal Lamp	5702NAK

For replacement bulbs not listed here, contact your dealer.

Electrical System

Electrical System Overload

The vehicle has fuses and circuit breakers to protect against an electrical system overload.

When the current electrical load is too heavy, the circuit breaker opens and closes, protecting the circuit until the current load returns to normal or the problem is fixed. This greatly reduces the chance of circuit overload and fire caused by electrical problems.

Fuses and circuit breakers protect power devices in the vehicle.

Replace a bad fuse with a new one of the identical size and rating.

If there is a problem on the road and a fuse needs to be replaced, the same amperage fuse can be borrowed. Choose some feature of the vehicle that is not needed to use and replace it as soon as possible.

Downloaded from www.Manualslib.com manuals search engine

Headlamp Wiring

An electrical overload may cause the lamps to go on and off, or in some cases to remain off. Have the headlamp wiring checked right away if the lamps go on and off or remain off.

Windshield Wipers

If the wiper motor overheats due to heavy snow or ice, the windshield wipers will stop until the motor cools and will then restart.

Although the circuit is protected from electrical overload, overload due to heavy snow or ice may cause wiper linkage damage. Always clear ice and heavy snow from the windshield before using the windshield wipers.

If the overload is caused by an electrical problem and not snow or ice, be sure to get it fixed.

Fuses and Circuit Breakers

The wiring circuits in the vehicle are protected from short circuits by a combination of fuses and circuit breakers. This greatly reduces the chance of damage caused by electrical problems.

To check a fuse, look at the silver-colored band inside the fuse. If the band is broken or melted, replace the fuse. Be sure to replace a bad fuse with a new one of the identical size and rating.

Fuses of the same amperage can be temporarily borrowed from another fuse location, if a fuse goes out. Replace the fuse as soon as possible.

To identify and check fuses, circuit breakers, and relays, see *Engine Compartment Fuse Block on page 10-31* and *Instrument Panel Fuse Block on page 10-34*.

Engine Compartment Fuse Block

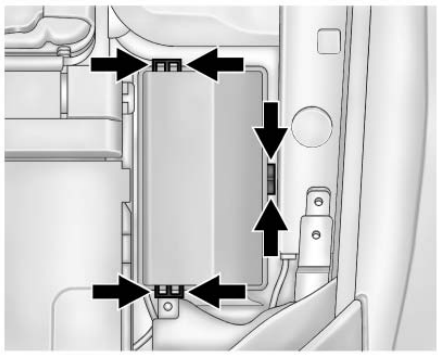

To remove the fuse block cover, squeeze the clips and lift it up.

Notice: **Spilling liquid on any electrical component on the vehicle may damage it. Always keep the covers on any electrical component.**

Downloaded from www.Manualslib.com manuals search engine

10-32 Vehicle Care

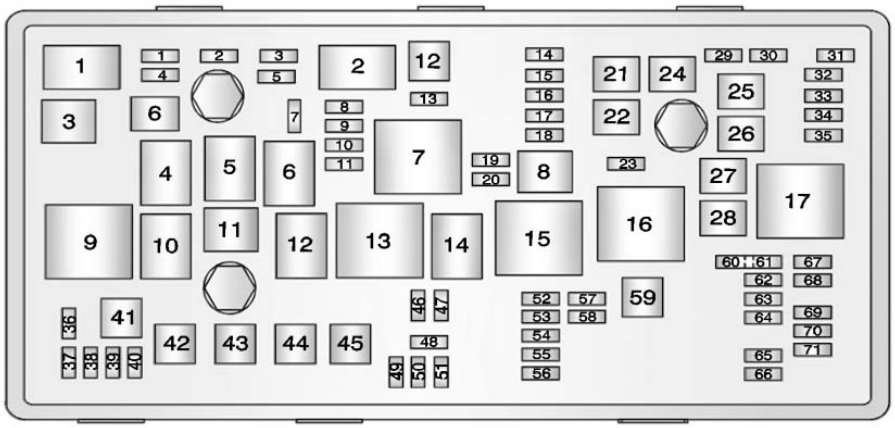

Engine Compartment Fuse Block

The vehicle may not be equipped with all of the fuses, relays, and features shown.

Fuses	Usage
1	Transmission Control Module
2	Engine Control Module
3	Not Used
4	Canister Vent Solenoid
5	Ignition, Engine Control Module/Transmission Control Module
6	Front Wipers
7	Not Used
8	Fuel Injectors 2 and 4
9	Fuel Injectors 1 and 3
10	Engine Control Module
11	Lambda Sensor 2
12	Starter Solenoid
13	Canister Vent Solenoid
14	Not Used
15	Rear Wiper
16	Ignition, Air Quality Sensor Shutter
17	Ignition, Airbag
18	Fuel System Control Module
19	Not Used

Downloaded from www.Manualslib.com manuals search engine

Fuses	Usage
20	Fuel Pump
21	Rear Power Windows
22	Not Used
23	Not Used
24	Front Power Windows
25	Electronic Vacuum Pump
26	Antilock Brake System Pump
27	Passive Entry/Passive Start
28	Rear Window Defogger
29	Not Used
30	Antilock Brake System Valve
31	Body Control Module, VBAT 07
32	Body Control Module VBAT 06
33	Front Seat Heating
34	Sunroof

Fuses	Usage
35	Amplifier
36	Not Used
37	High Beam, Right Side
38	High Beam, Left Side
39	Not Used
40	Not Used
41	Not Used
42	Cooling Fan K2
43	Not Used
44	Not Used
45	Cooling Fan K1
46	Cooling Fan
47	Lambda Sensor 1
48	Fog Lamps
49	Not Used
50	Not Used
51	Horn
52	MIL

Fuses	Usage
53	Inside Rearview Mirror
54	MHL Light Center
55	Folding Mirror
56	Front Washer
57	Steering Column Lock
58	Not Used
59	Secondary Air Pump
60	Mirror Defogger
61	Mirror Defogger
62	Air Conditioning Compressor Clutch
63	Rear Window Sensor
64	Automatic Occupant Sensing System
65	Rear Fog Lamp
66	Rear Washer
67	Fuel System Control Module
68	Not Used

Downloaded from www.Manualslib.com manuals search engine

Fuses	Usage
69	Battery Voltage Sensor
70	Rain Sensor
71	Not Used

Relays	Usage
1	Air Conditioning Compressor Clutch
2	Starter Solenoid
3	Cooling Fan K7
4	Front Wiper Speed
5	Front Wiper On
6	Not Used
7	Ignition 87 Main
8	Fuel Pump
9	Cooling Fan K2

Relays	Usage
10	Cooling Fan K3
11	Not Used
12	Cooling Fan K3
13	Cooling Fan K1
14	Not Used
15	Ignition 15
16	Secondary AIR Pump
17	Window/Mirror Defogger

Instrument Panel Fuse Block

The instrument panel fuse block is in the driver side of instrument panel. To access the fuses:

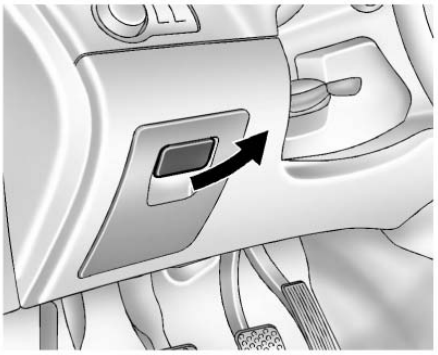

1. Open the storage compartment by pulling out at the top.

Downloaded from www.Manualslib.com manuals search engine

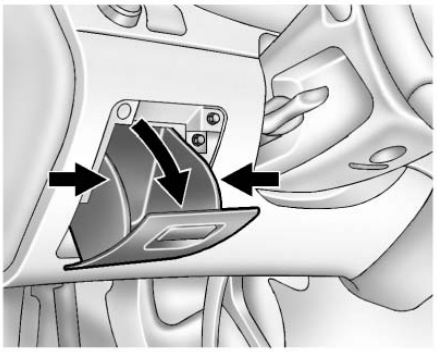

2. Squeeze the sides of the compartment in and rotate it downward.

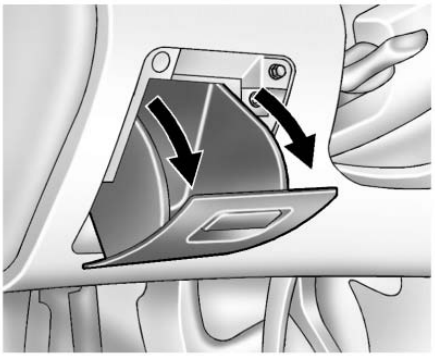

3. Remove the compartment.

To reinstall the compartment, reverse the steps above.

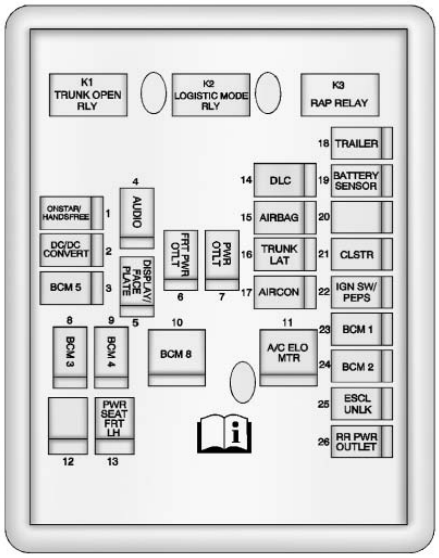

Instrument Panel Fuse Block

The vehicle may not be equipped with all of the fuses, relays, and features shown.

Downloaded from www.Manualslib.com manuals search engine

Circuit Number	Usage
1	OnStar/Hands-Free Phone
2	DC/DC Converter
3	Body Control Module 5
4	Audio
5	Information Display, Face Plate
6	Front Power Outlet
7	Power Outlet
8	Body Control Module 3
9	Body Control Module 4
10	Body Control Module 8

Circuit Number	Usage
11	Air Conditioning Blower Motor
12	Not Used
13	Power Front Seat, Left Side
14	Dynamic Light Control
15	Airbag
16	Tailgate
17	Air Conditioning System
18	Trailer
19	Battery Sensor
20	Not Used
21	Instrument Cluster

Circuit Number	Usage
22	Ignition/Electronic Key System
23	Body Control Module 1
24	Body Control Module 2
25	Steering Column Lock
26	Rear Power Outlet

Relays	Usage
K1	Trunk Open
K2	Logistic Mode
K3	Retained Accessory Power

Downloaded from www.Manualslib.com manuals search engine

Wheels and Tires

Tires

Every new GM vehicle has high-quality tires made by a leading tire manufacturer. See the warranty manual for information regarding the tire warranty and where to get service. For additional information refer to the tire manufacturer.

⚠ WARNING

- Poorly maintained and improperly used tires are dangerous.
- Overloading the tires can cause overheating as a result of too much flexing. There could be a blowout and a serious crash. See *Vehicle Load Limits on page 9-9*.

(Continued)

WARNING (Continued)

- Underinflated tires pose the same danger as overloaded tires. The resulting crash could cause serious injury. Check all tires frequently to maintain the recommended pressure. Tire pressure should be checked when the tires are cold.
- Overinflated tires are more likely to be cut, punctured, or broken by a sudden impact— such as when hitting a pothole. Keep tires at the recommended pressure.
- Worn or old tires can cause a crash. If the tread is badly worn, replace them.
- Replace any tires that have been damaged by impacts with potholes, curbs, etc.

(Continued)

WARNING (Continued)

- Improperly repaired tires can cause a crash. Only the dealer or an authorized tire service center should repair, replace, dismount, and mount the tires.
- Do not spin the tires in excess of 56 km/h (35 mph) on slippery surfaces such as snow, mud, ice, etc. Excessive spinning may cause the tires to explode.

All-Season Tires

This vehicle may come with all-season tires. These tires are designed to provide good overall performance on most road surfaces and weather conditions. Original equipment tires designed to GM's specific tire performance criteria have a TPC specification code molded onto the sidewall.

Downloaded from www.Manualslib.com manuals search engine

Original equipment all-season tires can be identified by the last two characters of this TPC code, which will be “MS.”

Consider installing winter tires on the vehicle if frequent driving on snow or ice-covered roads is expected. All-season tires provide adequate performance for most winter driving conditions, but they may not offer the same level of traction or performance as winter tires on snow or ice-covered roads. See *Winter Tires on page 10-38*.

Winter Tires

This vehicle was not, originally, equipped with winter tires. Winter tires are designed for increased traction on snow and ice-covered roads. Consider installing winter tires on the vehicle if frequent driving on snow or ice-covered roads is expected. See your dealer for details regarding winter tire availability and proper tire selection. Also, see *Buying New Tires on page 10-51*.

With winter tires, there may be decreased dry road traction, increased road noise, and shorter tread life. After changing to winter tires, be alert for changes in vehicle handling and braking.

If using winter tires:

- Use tires of the same brand and tread type on all four wheel positions.
- Use only radial ply tires of the same size, load range, and speed rating as the original equipment tires.

Winter tires with the same speed rating as the original equipment tires may not be available for H, V, W, Y, and ZR speed rated tires. If winter tires with a lower speed rating are chosen, never exceed the tire's maximum speed capability.

Summer Tires

This vehicle may come with high performance summer tires. These tires have a special tread and compound that are optimized for maximum dry and wet road performance. This special tread and compound will decrease performance in cold climates, and on ice and snow. We recommend installing winter tires on the vehicle if frequent driving in cold temperatures or on snow or ice covered roads is expected. See *Winter Tires on page 10-38*.

Tire Sidewall Labeling

Useful information about a tire is molded into its sidewall. The examples show a typical passenger tire sidewall.

Downloaded from www.Manualslib.com manuals search engine

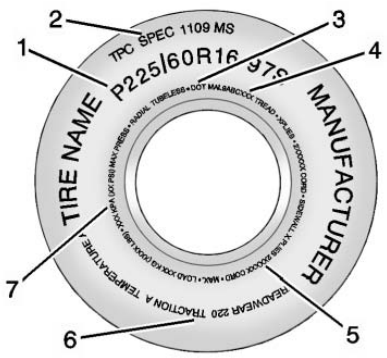

Passenger (P-Metric) Tire Example

(1) Tire Size: The tire size is a combination of letters and numbers used to define a particular tire's width, height, aspect ratio, construction type, and service description. See the “Tire Size” illustration later in this section for more detail.

(2) TPC Spec (Tire Performance Criteria Specification): Original equipment tires designed to GM's specific tire performance criteria have a TPC specification code molded onto the sidewall. GM's TPC specifications meet or exceed all federal safety guidelines.

(3) DOT (Department of Transportation): The Department of Transportation (DOT) code indicates that the tire is in compliance with the U.S. Department of Transportation Motor Vehicle Safety Standards.

DOT Tire Date of Manufacture: The last four digits of the TIN indicate the tire manufactured date. The first two digits represent the week (01-52) and the last two digits, the year. For example, the third week of the year 2010 would have a four-digit DOT date of 0310.

(4) Tire Identification Number (TIN): The letters and numbers following the DOT code are the Tire Identification Number (TIN). The TIN shows the manufacturer and plant code, tire size, and date the tire was manufactured. The TIN is molded onto both sides of the tire, although only one side may have the date of manufacture.

(5) Tire Ply Material: The type of cord and number of plies in the sidewall and under the tread.

(6) Uniform Tire Quality Grading (UTQG): Tire manufacturers are required to grade tires based on three performance factors: treadwear, traction, and temperature resistance. For more information see *Uniform Tire Quality Grading on page 10-53*.

Downloaded from www.Manualslib.com manuals search engine

(7) Maximum Cold Inflation Load Limit: Maximum load that can be carried and the maximum pressure needed to support that load.

Tire Designations

Tire Size

The following is an example of a typical passenger vehicle tire size.

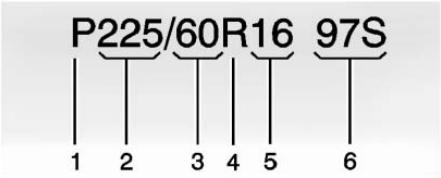

(1) Passenger (P-Metric) Tire: The United States version of a metric tire sizing system. The letter P as the first character in the tire size means a passenger vehicle tire engineered to standards set by the U.S. Tire and Rim Association.

(2) Tire Width: The three-digit number indicates the tire section width in millimeters from sidewall to sidewall.

(3) Aspect Ratio: A two-digit number that indicates the tire height-to-width measurements. For example, if the tire size aspect ratio is 60, as shown in item 3 of the illustration, it would mean that the tire's sidewall is 60 percent as high as it is wide.

(4) Construction Code: A letter code is used to indicate the type of ply construction in the tire. The letter R means radial ply construction; the letter D means diagonal or bias ply construction; and the letter B means belted-bias ply construction.

(5) Rim Diameter: Diameter of the wheel in inches.

(6) Service Description: These characters represent the load index and speed rating of the tire. The load index represents the load carrying capacity a tire is certified to carry. The speed rating is the maximum speed a tire is certified to carry a load.

Tire Terminology and Definitions

Air Pressure: The amount of air inside the tire pressing outward on each square inch of the tire. Air pressure is expressed in kPa (kilopascal) or psi (pounds per square inch).

Accessory Weight: The combined weight of optional accessories. Some examples of optional accessories are automatic transmission, power

Downloaded from www.Manualslib.com manuals search engine

steering, power brakes, power windows, power seats, and air conditioning.

Aspect Ratio: The relationship of a tire's height to its width.

Belt: A rubber coated layer of cords between the plies and the tread. Cords may be made from steel or other reinforcing materials.

Bead: The tire bead contains steel wires wrapped by steel cords that hold the tire onto the rim.

Bias Ply Tire: A pneumatic tire in which the plies are laid at alternate angles less than 90 degrees to the centerline of the tread.

Cold Tire Pressure: The amount of air pressure in a tire, measured in kPa (kilopascal) or psi (pounds per square inch) before a tire has built up heat from driving. See *Tire Pressure on page 10-43*.

Curb Weight: The weight of a motor vehicle with standard and optional equipment including the maximum capacity of fuel, oil, and coolant, but without passengers and cargo.

DOT Markings: A code molded into the sidewall of a tire signifying that the tire is in compliance with the U.S. Department of Transportation (DOT) Motor Vehicle Safety Standards. The DOT code includes the Tire Identification Number (TIN), an alphanumeric designator which can also identify the tire manufacturer, production plant, brand, and date of production.

GVWR: Gross Vehicle Weight Rating. See *Vehicle Load Limits on page 9-9*.

GAWR FRT: Gross Axle Weight Rating for the front axle. See *Vehicle Load Limits on page 9-9*.

GAWR RR: Gross Axle Weight Rating for the rear axle. See *Vehicle Load Limits on page 9-9*.

Intended Outboard Sidewall: The side of an asymmetrical tire, that must always face outward when mounted on a vehicle.

Kilopascal (kPa): The metric unit for air pressure.

Light Truck (LT-Metric) Tire: A tire used on light duty trucks and some multipurpose passenger vehicles.

Load Index: An assigned number ranging from 1 to 279 that corresponds to the load carrying capacity of a tire.

Downloaded from www.Manualslib.com manuals search engine

Maximum Inflation Pressure: The maximum air pressure to which a cold tire can be inflated. The maximum air pressure is molded onto the sidewall.

Maximum Load Rating: The load rating for a tire at the maximum permissible inflation pressure for that tire.

Maximum Loaded Vehicle Weight: The sum of curb weight, accessory weight, vehicle capacity weight, and production options weight.

Normal Occupant Weight: The number of occupants a vehicle is designed to seat multiplied by 68 kg (150 lbs). See *Vehicle Load Limits on page 9-9*.

Occupant Distribution: Designated seating positions.

Outward Facing Sidewall: The side of an asymmetrical tire that has a particular side that faces outward when mounted on a vehicle. The side of the tire that contains a whitewall, bears white lettering, or bears manufacturer, brand, and/or model name molding that is higher or deeper than the same moldings on the other sidewall of the tire.

Passenger (P-Metric) Tire: A tire used on passenger cars and some light duty trucks and multipurpose vehicles.

Recommended Inflation Pressure: Vehicle manufacturer's recommended tire inflation pressure as shown on the tire placard. See *Tire Pressure on page 10-43* and *Vehicle Load Limits on page 9-9*.

Radial Ply Tire: A pneumatic tire in which the ply cords that extend to the beads are laid at 90 degrees to the centerline of the tread.

Rim: A metal support for a tire and upon which the tire beads are seated.

Sidewall: The portion of a tire between the tread and the bead.

Speed Rating: An alphanumeric code assigned to a tire indicating the maximum speed at which a tire can operate.

Traction: The friction between the tire and the road surface. The amount of grip provided.

Tread: The portion of a tire that comes into contact with the road.

Treadwear Indicators: Narrow bands, sometimes called wear bars, that show across the tread of a tire when only 1.6 mm (1/16 in) of tread remains. See *When It Is Time for New Tires on page 10-50*.

Downloaded from www.Manualslib.com manuals search engine

UTQGS (Uniform Tire Quality Grading Standards): A tire information system that provides consumers with ratings for a tire's traction, temperature, and treadwear. Ratings are determined by tire manufacturers using government testing procedures. The ratings are molded into the sidewall of the tire. See *Uniform Tire Quality Grading on page 10-53*.

Vehicle Capacity Weight: The number of designated seating positions multiplied by 68 kg (150 lbs) plus the rated cargo load. See *Vehicle Load Limits on page 9-9*.

Vehicle Maximum Load on the Tire: Load on an individual tire due to curb weight, accessory weight, occupant weight, and cargo weight.

Vehicle Placard: A label permanently attached to a vehicle showing the vehicle capacity weight and the original equipment tire size and recommended inflation pressure. See “Tire and Loading Information Label” under *Vehicle Load Limits on page 9-9*.

Tire Pressure

Tires need the correct amount of air pressure to operate effectively.

Notice: **Neither tire underinflation nor overinflation is good. Underinflated tires, or tires that do not have enough air, can result in:**

- **Tire overloading and overheating which could lead to a blowout.**
- **Premature or irregular wear.**
- **Poor handling.**
- **Reduced fuel economy.**

Overinflated tires, or tires that have too much air, can result in:

- **Unusual wear.**
- **Poor handling.**
- **Rough ride.**
- **Needless damage from road hazards.**

The Tire and Loading Information label on the vehicle indicates the original equipment tires and the correct cold tire inflation pressures. The recommended pressure is the minimum air pressure needed to support the vehicle's maximum load carrying capacity.

Downloaded from www.Manualslib.com manuals search engine

For additional information regarding how much weight the vehicle can carry, and an example of the Tire and Loading Information label, see *Vehicle Load Limits on page 9-9*. How the vehicle is loaded affects vehicle handling and ride comfort. Never load the vehicle with more weight than it was designed to carry.

When to Check

Check the tires once a month or more.

How to Check

Use a good quality pocket-type gauge to check the tire pressure. Proper tire inflation cannot be determined by looking at the tire. Check the tire inflation pressure when the tires are cold, meaning the vehicle has not been driven for at least three hours or no more than 1.6 km (1 mi).

Remove the valve cap from the tire valve stem. Press the tire gauge firmly onto the valve to get the pressure measurement. If the cold tire inflation pressure matches the recommended pressure on the Tire and Loading Information label, no further adjustment is necessary.

If the inflation pressure is low, add air until the recommended pressure is reached. If the inflation pressure in high, press on the metal stem in the center of the tire valve to release air. Re-check the tire pressure with the tire gauge.

Return the valve caps on the valve stems to keep out dirt and moisture and prevent leaks.

Tire Pressure Monitor System

The Tire Pressure Monitor System (TPMS) uses radio and sensor technology to check tire pressure levels. The TPMS sensors monitor the air pressure in your tires and transmit tire pressure readings to a receiver located in the vehicle.

Each tire, including the spare (if provided), should be checked monthly when cold and inflated to the inflation pressure recommended by the vehicle manufacturer on the vehicle placard or tire inflation pressure label. (If your vehicle has tires of a different size than the size indicated on the vehicle placard or tire inflation pressure label, you should determine the proper tire inflation pressure for those tires.)

As an added safety feature, your vehicle has been equipped with a tire pressure monitoring system (TPMS) that illuminates a low tire

Downloaded from www.Manualslib.com manuals search engine

pressure telltale when one or more of your tires is significantly under-inflated.

Accordingly, when the low tire pressure telltale illuminates, you should stop and check your tires as soon as possible, and inflate them to the proper pressure. Driving on a significantly under-inflated tire causes the tire to overheat and can lead to tire failure. Under-inflation also reduces fuel efficiency and tire tread life, and may affect the vehicle's handling and stopping ability.

Please note that the TPMS is not a substitute for proper tire maintenance, and it is the driver's responsibility to maintain correct tire pressure, even if under-inflation has not reached the level to trigger illumination of the TPMS low tire pressure telltale.

Your vehicle has also been equipped with a TPMS malfunction indicator to indicate when the system is not operating properly.

The TPMS malfunction indicator is combined with the low tire pressure telltale. When the system detects a malfunction, the telltale will flash for approximately one minute and then remain continuously illuminated. This sequence will continue upon subsequent vehicle start-ups as long as the malfunction exists.

When the malfunction indicator is illuminated, the system may not be able to detect or signal low tire pressure as intended. TPMS malfunctions may occur for a variety of reasons, including the installation of replacement or alternate tires or wheels on the vehicle that prevent the TPMS from functioning properly. Always check the TPMS malfunction telltale after replacing one or more tires or wheels on your vehicle to ensure that the replacement or alternate tires and wheels allow the TPMS to continue to function properly.

See *Tire Pressure Monitor Operation on page 10-45*.

Federal Communications Commission (FCC) Rules and with Industry Canada Standards

See *Radio Frequency Statement on page 13-15* for information regarding Part 15 of the Federal Communications Commission (FCC) Rules and with Industry Canada Standards RSS-GEN/210/220/310.

Tire Pressure Monitor Operation

This vehicle may have a Tire Pressure Monitor System (TPMS). The TPMS is designed to warn the driver when a low tire pressure condition exists. TPMS sensors are mounted onto each tire and wheel assembly, excluding the spare tire and wheel assembly. The TPMS sensors monitor the air pressure in the tires and transmit the tire pressure readings to a receiver located in the vehicle.

Downloaded from www.Manualslib.com manuals search engine

When a low tire pressure condition is detected, the TPMS illuminates the low tire pressure warning light located on the instrument cluster. If the warning light comes on, stop as soon as possible and inflate the tires to the recommended pressure shown on the Tire and Loading Information label. See *Vehicle Load Limits on page 9-9*.

A message to check the pressure in a specific tire displays in the Driver Information Center (DIC) display. The low tire pressure warning light and the DIC warning message come on at each ignition cycle until the tires are inflated to the correct inflation pressure. Using the DIC, tire pressure levels can be viewed. For additional information and details about the DIC operation and displays see *Driver Information Center (DIC) on page 5-21*.

The low tire pressure warning light may come on in cool weather when the vehicle is first started, and then turn off as the vehicle is driven. This could be an early indicator that the air pressure is getting low and must be inflated to the proper pressure.

A Tire and Loading Information label shows the size of the original equipment tires and the correct inflation pressure for the tires when they are cold. See *Vehicle Load Limits on page 9-9*, for an example of the Tire and Loading Information label and its location. Also see *Tire Pressure on page 10-43*.

The TPMS can warn about a low tire pressure condition but it does not replace normal tire maintenance. See *Tire Inspection on page 10-48*, *Tire Rotation on page 10-49* and *Tires on page 10-37*.

Notice: **Tire sealant materials are not all the same. A non-approved tire sealant could damage the TPMS sensors. TPMS sensor damage caused by using an incorrect tire sealant is not covered by the vehicle warranty. Always use only the GM-approved tire sealant available through your dealer or included in the vehicle.**

Factory-installed Tire Inflator Kits use a GM-approved liquid tire sealant. Using non-approved tire sealants could damage the TPMS sensors. See *Tire Sealant and Compressor Kit on page 10-58* for information regarding the inflator kit materials and instructions.

Downloaded from www.Manualslib.com manuals search engine

TPMS Malfunction Light and Message

The TPMS will not function properly if one or more of the TPMS sensors are missing or inoperable. When the system detects a malfunction, the low tire warning light flashes for about one minute and then stays on for the remainder of the ignition cycle. A DIC warning message also displays. The malfunction light and DIC warning message come on at each ignition cycle until the problem is corrected. Some of the conditions that can cause these to come on are:

- One of the road tires has been replaced with the spare tire. The spare tire does not have a TPMS sensor. The malfunction light and DIC message should go off after the road tire is replaced and the sensor matching process is performed successfully. See "TPMS Sensor Matching Process" later in this section.
- The TPMS sensor matching process was not done or not completed successfully after rotating the tires. The malfunction light and the DIC message should go off after successfully completing the sensor matching process. See "TPMS Sensor Matching Process" later in this section.
- One or more TPMS sensors are missing or damaged. The DIC message and the malfunction light should go off when the TPMS sensors are installed and the sensor matching process is performed successfully. See your dealer for service.
- Replacement tires or wheels do not match the original equipment tires or wheels. Tires and wheels other than those recommended could prevent the TPMS from functioning properly. See *Buying New Tires on page 10-51*.
- Operating electronic devices or being near facilities using radio wave frequencies similar to the TPMS could cause the TPMS sensors to malfunction.

If the TPMS is not functioning properly, it cannot detect or signal a low tire condition. See your dealer for service if the TPMS malfunction light and DIC message come on and stay on.

TPMS Sensor Matching Process

Each TPMS sensor has a unique identification code. The identification code needs to be matched to a new tire/wheel position after rotating the tires or replacing one or more of the TPMS sensors. The TPMS sensor matching process should also be performed after replacing a spare tire with a road tire containing the TPMS sensor. The malfunction light and the DIC message should go off at the next ignition cycle.

Downloaded from www.Manualslib.com manuals search engine

The sensors are matched to the tire/wheel positions, using a TPMS relearn tool, in the following order: driver side front tire, passenger side front tire, passenger side rear tire, and driver side rear. See your dealer for service or to purchase a relearn tool.

There are two minutes to match the first tire/wheel position, and five minutes overall to match all four tire/wheel positions. If it takes longer, the matching process stops and must be restarted.

The TPMS sensor matching process is:

1. Set the parking brake.
2. Turn the ignition to ON/RUN with the engine off.
3. Use the MENU button to select the Vehicle Information menu in the Driver Information Center (DIC).
4. Use the thumbwheel to scroll to the Tire Pressure Menu item screen.
5. Press the SET/CLR button to begin the sensor matching process.

   A message requesting acceptance of the process should display.
6. Press the SET/CLR button again to confirm the selection.

   The horn sounds twice to signal the receiver is in relearn mode and the TIRE LEARNING ACTIVE message displays on the DIC screen.
7. Start with the driver side front tire.
8. Place the relearn tool against the tire sidewall, near the valve stem. Then press the button to activate the TPMS sensor. A horn chirp confirms that the sensor identification code has been matched to this tire and wheel position.
9. Proceed to the passenger side front tire, and repeat the procedure in Step 8.
10. Proceed to the passenger side rear tire, and repeat the procedure in Step 8.
11. Proceed to the driver side rear tire, and repeat the procedure in Step 8. The horn sounds two times to indicate the sensor identification code has been matched to the driver side rear tire, and the TPMS sensor matching process is no longer active. The TIRE LEARNING ACTIVE message on the DIC display screen goes off.
12. Turn the ignition to LOCK/OFF.
13. Set all four tires to the recommended air pressure level as indicated on the Tire and Loading Information label.

Tire Inspection

We recommend that the tires, including the spare tire, if the vehicle has one, be inspected for signs of wear or damage at least once a month.

Downloaded from www.Manualslib.com manuals search engine

Replace the tire if:

- The indicators at three or more places around the tire can be seen.
- There is cord or fabric showing through the tire's rubber.
- The tread or sidewall is cracked, cut, or snagged deep enough to show cord or fabric.
- The tire has a bump, bulge, or split.
- The tire has a puncture, cut, or other damage that cannot be repaired well because of the size or location of the damage.

Tire Rotation

Tires should be rotated every 12 000 km (7,500 mi). See *Maintenance Schedule on page 11-2*.

Tires are rotated to achieve a more uniform wear for all tires. The first rotation is the most important.

Anytime unusual wear is noticed, rotate the tires as soon as possible, check for proper tire inflation pressure, and check for damaged tires or wheels. If the unusual wear continues after the rotation, check the wheel alignment. See *When It Is Time for New Tires on page 10-50* and *Wheel Replacement on page 10-55*.

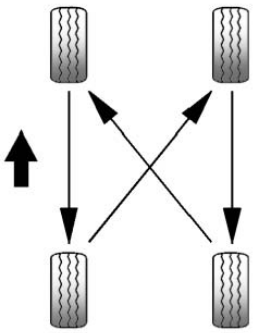

When rotating the tires, always use the correct rotation pattern shown here.

Do not include the spare tire in the tire rotation.

Adjust the front and rear tires to the recommended inflation pressure on the Tire and Loading Information Label after the tires have been rotated. See *Tire Pressure on page 10-43* and *Vehicle Load Limits on page 9-9*.

Downloaded from www.Manualslib.com manuals search engine

Reset the Tire Pressure Monitor System. See *Tire Pressure Monitor Operation on page 10-45*.

Check that all wheel nuts are properly tightened. See “Wheel Nut Torque” under *Capacities and Specifications on page 12-2*.

⚠ WARNING

Rust or dirt on a wheel, or on the parts to which it is fastened, can make wheel nuts become loose after time. The wheel could come off and cause an accident. When changing a wheel, remove any rust or dirt from places where the wheel attaches to the vehicle. In an emergency, a cloth or a paper towel can be used; however, use a scraper or wire brush later to remove all rust or dirt.

Lightly coat the center of the wheel hub with wheel bearing grease after a wheel change or tire rotation to prevent corrosion or rust build-up. Do not get grease on the flat wheel mounting surface or on the wheel nuts or bolts.

When It Is Time for New Tires

Factors such as maintenance, temperatures, driving speeds, vehicle loading, and road conditions affect the wear rate of the tires.

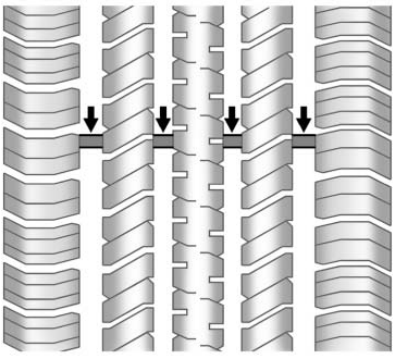

Treadwear indicators are one way to tell when it is time for new tires. Treadwear indicators appear when the tires have only 1.6 mm (1/16 in) or less of tread remaining. See *Tire Inspection on page 10-48* and *Tire Rotation on page 10-49*.

The rubber in tires ages over time. This also applies to the spare tire, if the vehicle has one, even if it is never used. Multiple factors including temperatures, loading conditions, and inflation pressure maintenance affect how fast aging takes place. GM recommends that tires, including the spare if

Downloaded from www.Manualslib.com manuals search engine

equipped, be replaced after six years, regardless of tread wear. The tire manufacturer date is the last four digits of the DOT Tire Identification Number (TIN) which is molded into one side of the tire sidewall. The first two digits represent the week (01–52) and the last two digits, the year. For example, the third week of the year 2010 would have a four-digit DOT date of 0310.

Vehicle Storage

Tires age when stored normally mounted on a parked vehicle. Park a vehicle that will be stored for at least a month in a cool, dry, clean area away from direct sunlight to slow aging. This area should be free of grease, gasoline, or other substances that can deteriorate rubber.

Parking for an extended period can cause flat spots on the tires that may result in vibrations while driving. When storing a vehicle for at least a month, remove the tires or raise the vehicle to reduce the weight from the tires.

Buying New Tires

GM has developed and matched specific tires for the vehicle. The original equipment tires installed were designed to meet General Motors Tire Performance Criteria Specification (TPC Spec) system rating. When replacement tires are needed, GM strongly recommends buying tires with the same TPC Spec rating.

GM's exclusive TPC Spec system considers over a dozen critical specifications that impact the overall performance of the vehicle, including brake system performance, ride and handling, traction control, and tire pressure monitoring performance. GM's TPC Spec number is molded onto the tire's sidewall near the tire size. If the tires have an all-season tread design, the TPC spec number will be followed by MS, for mud and snow. See *Tire Sidewall Labeling on page 10-38*.

GM recommends replacing worn tires in complete sets of four. Uniform tread depth on all tires will help to maintain the performance of the vehicle. Braking and handling performance may be adversely affected if all the tires are not replaced at the same time. If proper rotation and maintenance have been done, all four tires should wear out at about the same time. See *Tire Rotation on page 10-49* for information on proper tire rotation. However, if it is necessary to replace only one axle set of worn tires, place the new tires on the rear axle.

Downloaded from www.Manualslib.com manuals search engine

Winter tires with the same speed rating as the original equipment tires may not be available for H, V, W, Y, and ZR speed rated tires. Never exceed the winter tire's maximum speed capability when using winter tires with a lower speed rating.

⚠ WARNING

Tires could explode during improper service. Attempting to mount or dismount a tire could cause injury or death. Only your dealer or authorized tire service center should mount or dismount the tires.

⚠ WARNING

Mixing tires of different sizes, brands, or types may cause loss of control of the vehicle, resulting in a crash or other vehicle damage. Use the correct size, brand, and type of tire on all wheels.

⚠ WARNING

Using bias-ply tires on the vehicle may cause the wheel rim flanges to develop cracks after many miles of driving. A tire and/or wheel could fail suddenly and cause a crash. Use only radial-ply tires with the wheels on the vehicle.

If the vehicle tires must be replaced with a tire that does not have a TPC Spec number, make sure they are the same size, load range, speed rating, and construction (radial) as the original tires.

Vehicles that have a tire pressure monitoring system could give an inaccurate low-pressure warning if non-TPC Spec rated tires are installed. See *Tire Pressure Monitor System on page 10-44*.

The Tire and Loading Information Label indicates the original equipment tires on the vehicle. See *Vehicle Load Limits on page 9-9*, for the label location and more information about the Tire and Loading Information label.

Downloaded from www.Manualslib.com manuals search engine

Different Size Tires and Wheels

If wheels or tires are installed that are a different size than the original equipment wheels and tires, vehicle performance, including its braking, ride and handling characteristics, stability, and resistance to rollover may be affected. If the vehicle has electronic systems such as antilock brakes, rollover airbags, traction control, electronic stability control, or All-Wheel Drive, the performance of these systems can also be affected.

⚠ WARNING

If different sized wheels are used, there may not be an acceptable level of performance and safety if tires not recommended for those wheels are selected. This increases the chance of a crash and serious injury. Only use GM

(Continued)

WARNING (Continued)

specific wheel and tire systems developed for the vehicle, and have them properly installed by a GM certified technician.

See *Buying New Tires on page 10-51* and *Accessories and Modifications on page 10-3*.

Uniform Tire Quality Grading

Quality grades can be found where applicable on the tire sidewall between tread shoulder and maximum section width. For example:

Treadwear 200 Traction AA Temperature A

The following information relates to the system developed by the United States National Highway Traffic Safety Administration (NHTSA), which grades tires by treadwear, traction, and temperature performance. This applies only to vehicles sold in the United States. The grades are molded on the sidewalls of most passenger car tires. The Uniform Tire Quality Grading (UTQG) system does not apply to deep tread, winter tires, compact spare tires, tires with nominal rim diameters of 10 to 12 inches (25 to 30 cm), or to some limited-production tires.

While the tires available on General Motors passenger cars and light trucks may vary with respect to these grades, they must also conform to federal safety requirements and additional General Motors Tire Performance Criteria (TPC) standards.

Downloaded from www.Manualslib.com manuals search engine

All Passenger Car Tires Must Conform to Federal Safety Requirements In Addition To These Grades.

Treadwear

The treadwear grade is a comparative rating based on the wear rate of the tire when tested under controlled conditions on a specified government test course. For example, a tire graded 150 would wear one and one-half (1½) times as well on the government course as a tire graded 100. The relative performance of tires depends upon the actual conditions of their use, however, and may depart significantly from the norm due to variations in driving habits, service practices and differences in road characteristics and climate.

Traction – AA, A, B, C

The traction grades, from highest to lowest, are AA, A, B, and C. Those grades represent the tire's ability to stop on wet pavement as measured under controlled conditions on specified government test surfaces of asphalt and concrete. A tire marked C may have poor traction performance. Warning: The traction grade assigned to this tire is based on straight-ahead braking traction tests, and does not include acceleration, cornering, hydroplaning, or peak traction characteristics.

Temperature – A, B, C

The temperature grades are A (the highest), B, and C, representing the tire's resistance to the generation of heat and its ability to dissipate heat when tested under controlled conditions on a specified indoor laboratory test wheel. Sustained high temperature can cause the material of the tire to degenerate and reduce tire life, and excessive temperature can lead to sudden tire failure. The grade C corresponds to a level of performance which all passenger car tires must meet under the Federal Motor Safety Standard No. 109. Grades B and A represent higher levels of performance on the laboratory test wheel than the minimum required by law. Warning: The temperature grade for this tire is established for a tire that is properly inflated and not overloaded. Excessive speed, underinflation, or excessive loading, either separately or in combination, can cause heat buildup and possible tire failure.

Downloaded from www.Manualslib.com manuals search engine

Wheel Alignment and Tire Balance

The tires and wheels were aligned and balanced at the factory to provide the longest tire life and best overall performance. Adjustments to wheel alignment and tire balancing will not be necessary on a regular basis. However, check the alignment if there is unusual tire wear or if the vehicle is pulling to one side or the other. If the vehicle vibrates when driving on a smooth road, the tires and wheels might need to be rebalanced. See your dealer for proper diagnosis.

Wheel Replacement

Replace any wheel that is bent, cracked, or badly rusted or corroded. If wheel nuts keep coming loose, the wheel, wheel bolts, and wheel nuts should be replaced. If the wheel leaks air, replace it. Some aluminum wheels can be repaired. See your dealer if any of these conditions exist.

Your dealer will know the kind of wheel that is needed.

Each new wheel should have the same load-carrying capacity, diameter, width, offset, and be mounted the same way as the one it replaces.

Replace wheels, wheel bolts, wheel nuts, or Tire Pressure Monitor System (TPMS) sensors with new GM original equipment parts.

⚠ WARNING

Using the wrong replacement wheels, wheel bolts, or wheel nuts can be dangerous. It could affect the braking and handling of the vehicle. Tires can lose air, and cause loss of control, causing a crash. Always use the correct wheel, wheel bolts, and wheel nuts for replacement.

Notice: **The wrong wheel can also cause problems with bearing life, brake cooling, speedometer or odometer calibration, headlamp aim, bumper height, vehicle ground clearance, and tire or tire chain clearance to the body and chassis.**

Used Replacement Wheels

⚠ WARNING

Replacing a wheel with a used one is dangerous. How it has been used or how far it has been driven may be unknown. It could fail suddenly and cause a crash. When replacing wheels, use a new GM original equipment wheel.

Downloaded from www.Manualslib.com manuals search engine

Tire Chains

⚠ WARNING

Do not use tire chains. There is not enough clearance. Tire chains used on a vehicle without the proper amount of clearance can cause damage to the brakes, suspension, or other vehicle parts. The area damaged by the tire chains could cause loss of control and a crash.

Use another type of traction device only if its manufacturer recommends it for the vehicle's tire size combination and road conditions. Follow that manufacturer's instructions. To avoid vehicle damage, drive slow and readjust or remove the traction device if it contacts the vehicle. Do not spin the wheels. If traction devices are used, install them on the front tires.

If a Tire Goes Flat

It is unusual for a tire to blow out while driving, especially if the tires are maintained properly. See *Tires on page 10-37*. If air goes out of a tire, it is much more likely to leak out slowly. But if there is ever a blowout, here are a few tips about what to expect and what to do:

If a front tire fails, the flat tire creates a drag that pulls the vehicle toward that side. Take your foot off the accelerator pedal and grip the steering wheel firmly. Steer to maintain lane position, and then gently brake to a stop, well off the road, if possible.

A rear blowout, particularly on a curve, acts much like a skid and may require the same correction as used in a skid. Stop pressing the accelerator pedal and steer to straighten the vehicle. It may be very bumpy and noisy. Gently brake to a stop, well off the road, if possible.

⚠ WARNING

Driving on a flat tire will cause permanent damage to the tire. Re-inflating a tire after it has been driven on while severely underinflated or flat may cause a blowout and a serious crash. Never attempt to re-inflate a tire that has been driven on while severely underinflated or flat. Have your dealer or an authorized tire service center repair or replace the flat tire as soon as possible.

⚠ WARNING

Lifting a vehicle and getting under it to do maintenance or repairs is dangerous without the appropriate safety equipment and training. If a jack is provided with the vehicle, it is designed only for

(Continued)

Downloaded from www.Manualslib.com manuals search engine

WARNING (Continued)

changing a flat tire. If it is used for anything else, you or others could be badly injured or killed if the vehicle slips off the jack. If a jack is provided with the vehicle, only use it for changing a flat tire.

If a tire goes flat, avoid further tire and wheel damage by driving slowly to a level place, well off the road, if possible. Turn on the hazard warning flashers. See *Hazard Warning Flashers on page 6-4*.

⚠ WARNING

Changing a tire can be dangerous. The vehicle can slip off the jack and roll over or fall causing injury or death. Find a level place to change the tire. To help prevent the vehicle from moving:

1. Set the parking brake firmly.
2. Put an automatic transmission in P (Park) or a manual transmission in 1 (First) or R (Reverse).
3. Turn off the engine and do not restart while the vehicle is raised.
4. Do not allow passengers to remain in the vehicle.
5. Place wheel blocks on both sides of the tire at the opposite corner of the tire being changed.

This vehicle may come with a jack and spare tire or a tire sealant and compressor kit. To use the jacking equipment to change a spare tire safely, follow the instructions below. Then see *Tire Changing on page 10-65*. To use the tire sealant and compressor kit, see *Tire Sealant and Compressor Kit on page 10-58*.

When the vehicle has a flat tire (2), use the following example as a guide to assist you in the placement of wheel blocks (1).

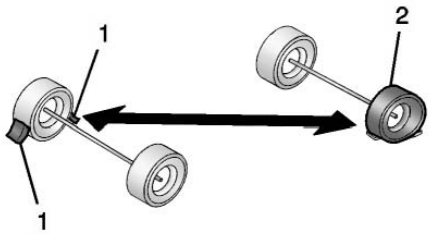

1. Wheel Block
2. Flat Tire

Downloaded from www.Manualslib.com manuals search engine

The following information explains how to repair or change a tire.

Tire Sealant and Compressor Kit

⚠ WARNING

Idling a vehicle in an enclosed area with poor ventilation is dangerous. Engine exhaust may enter the vehicle. Engine exhaust contains carbon monoxide (CO) which cannot be seen or smelled. It can cause unconsciousness and even death. Never run the engine in an enclosed area that has no fresh air ventilation. For more information, see *Engine Exhaust on page 9-20*.

⚠ WARNING

Overinflating a tire could cause the tire to rupture and you or others could be injured. Be sure to read and follow the tire sealant and compressor kit instructions and inflate the tire to its recommended pressure. Do not exceed the recommended pressure.

⚠ WARNING

Storing the tire sealant and compressor kit or other equipment in the passenger compartment of the vehicle could cause injury. In a sudden stop or collision, loose equipment could strike someone. Store the tire sealant and compressor kit in its original location.

If this vehicle has a tire sealant and compressor kit, there may not be a spare tire or tire changing equipment, and on some vehicles there may not be a place to store a tire.

The tire sealant and compressor can be used to temporarily seal punctures up to 6 mm (0.25 in) in the tread area of the tire. It can also be used to inflate an underinflated tire.

If the tire has been separated from the wheel, has damaged sidewalls, or has a large puncture, the tire is too severely damaged for the tire sealant and compressor kit to be effective. See *Roadside Assistance Program on page 13-5*.

Read and follow all of the tire sealant and compressor kit instructions.

Downloaded from www.Manualslib.com manuals search engine

The kit includes:

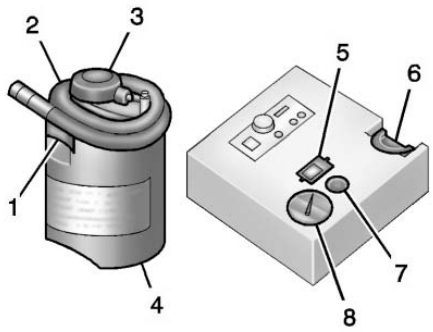

1. Sealant Canister Inlet Valve
2. Sealant/Air Hose
3. Base of Sealant Canister
4. Tire Sealant Canister
5. On/Off Button
6. Slot on Top of Compressor
7. Pressure Deflation Button
8. Pressure Gauge

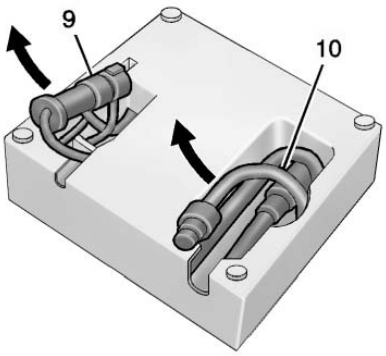

9. Power Plug
10. Air Only Hose

Tire Sealant

Read and follow the safe handling instructions on the label adhered to the tire sealant canister (4).

Check the tire sealant expiration date on the tire sealant canister. The tire sealant canister (4) should be replaced before its expiration date. Replacement tire sealant canisters are available at your local dealer.

There is only enough sealant to seal one tire. After usage, the tire sealant canister must be replaced.

Using the Tire Sealant and Compressor Kit to Temporarily Seal and Inflate a Punctured Tire

When using the tire sealant and compressor kit during cold temperatures, warm the kit in a heated environment for five minutes. This will help to inflate the tire faster.

If a tire goes flat, avoid further tire and wheel damage by driving slowly to a level place. Turn on the hazard warning flashers. See *Hazard Warning Flashers on page 6-4*.

See *If a Tire Goes Flat on page 10-56* for other important safety warnings.

Downloaded from www.Manualslib.com manuals search engine

Do not remove any objects that have penetrated the tire.

1. Remove the tire sealant canister (4) and compressor from its storage location. See *Storing the Tire Sealant and Compressor Kit on page 10-65*.
2. Remove the air only hose (10) and the power plug (9) from the bottom of the compressor.
3. Place the compressor on the ground near the flat tire.

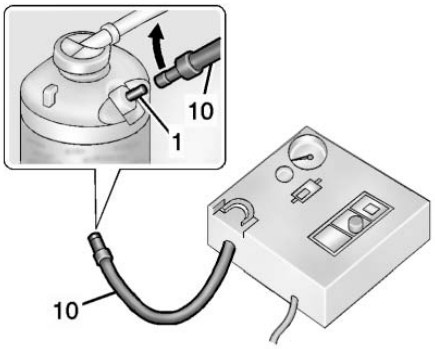

4. Attach the air only hose (10) to the sealant canister inlet valve (1) by turning it clockwise until tight.

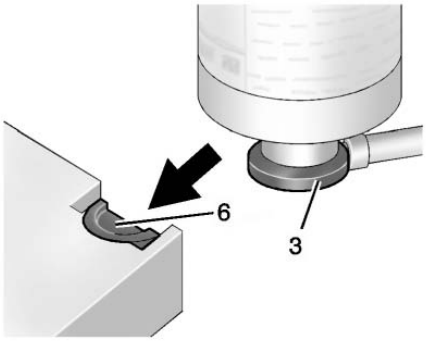

5. Slide the base of the tire sealant canister (3) into the slot on the top of the compressor (6) to hold it upright.

   Make sure the tire valve stem is positioned close to the ground so the hose will reach it.
6. Remove the valve stem cap from the flat tire by turning it counterclockwise.

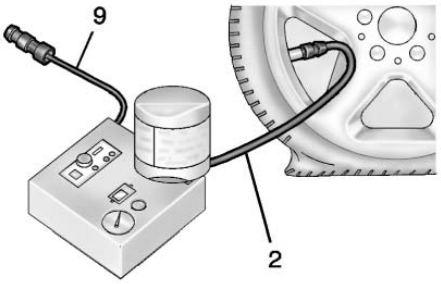

7. Attach the sealant/air hose (2) to the tire valve stem by turning it clockwise until tight.
8. Plug the power plug (9) into the accessory power outlet in the vehicle. Unplug all items from other accessory power outlets. See *Power Outlets on page 5-6*.

   If the vehicle has an accessory power outlet, do not use the cigarette lighter.

Downloaded from www.Manualslib.com manuals search engine

If the vehicle only has a cigarette lighter, use the cigarette lighter.

Do not pinch the power plug cord in the door or window.

9. Start the vehicle. The vehicle must be running while using the air compressor.

10. Press the on/off button (5) to turn the tire sealant and compressor kit on.

    The compressor will inject sealant and air into the tire.

    The pressure gauge (8) will initially show a high pressure while the compressor pushes the sealant into the tire. Once the sealant is completely dispersed into the tire, the pressure will quickly drop and start to rise again as the tire inflates with air only.

11. Inflate the tire to the recommended inflation pressure using the pressure gauge (8). The recommended inflation pressure can be found on the Tire and Loading Information label. See *Tire Pressure on page 10-43*.

    The pressure gauge (8) may read higher than the actual tire pressure while the compressor is on. Turn the compressor off to get an accurate pressure reading. The compressor may be turned on/off until the correct pressure is reached.

Notice: **If the recommended pressure cannot be reached after approximately 25 minutes, the vehicle should not be driven farther. The tire is too severely damaged and the tire sealant and compressor kit cannot inflate the tire. Remove the power plug from the accessory power outlet and unscrew the inflating hose from the tire valve. See *Roadside Assistance Program on page 13-5*.**

12. Press the on/off button (5) to turn the tire sealant and compressor kit off.

    The tire is not sealed and will continue to leak air until the vehicle is driven and the sealant is distributed in the tire. Therefore, Steps 13–21 must be done immediately after Step 12.

    Be careful while handling the tire sealant and compressor kit as it could be warm after usage.

13. Unplug the power plug (9) from the accessory power outlet in the vehicle.

14. Turn the sealant/air hose (2) counterclockwise to remove it from the tire valve stem.

15. Replace the tire valve stem cap.

Downloaded from www.Manualslib.com manuals search engine

16. Remove the tire sealant canister (4) from the slot on top of the compressor (6).
17. Turn the air only hose (10) counterclockwise to remove it from the tire sealant canister inlet valve (1).
18. Turn the sealant/air hose (2) clockwise onto the sealant canister inlet valve (1) to prevent sealant leakage.
19. Return the air only hose (10) and power plug (9) back to their original storage location.

20. If the flat tire was able to inflate to the recommended inflation pressure, remove the maximum speed label from the sealant canister and place it in a highly visible location.

    Do not exceed the speed on this label until the damaged tire is repaired or replaced.
21. Return the equipment to its original storage location in the vehicle.
22. Immediately drive the vehicle 8 km (5 mi) to distribute the sealant in the tire.
23. Stop at a safe location and check the tire pressure. Refer to Steps 1–10 under “Using the Tire Sealant and Compressor Kit without Sealant to Inflate a Tire (Not Punctured).”

    If the tire pressure has fallen more than 68 kPa (10 psi) below the recommended inflation pressure, stop driving the vehicle. The tire is too severely damaged and the tire sealant cannot seal the tire. See *Roadside Assistance Program on page 13-5*.

    If the tire pressure has not dropped more than 68 kPa (10 psi) from the recommended inflation pressure, inflate the tire to the recommended inflation pressure.
24. Wipe off any sealant from the wheel, tire, or vehicle.
25. Dispose of the used tire sealant canister (4) at a local dealer or in accordance with local state codes and practices.
26. Replace it with a new canister available from your dealer.
27. After temporarily sealing a tire using the tire sealant and compressor kit, take the

Downloaded from www.Manualslib.com manuals search engine

vehicle to an authorized dealer within 161 km (100 mi) of driving to have the tire repaired or replaced.

Using the Tire Sealant and Compressor Kit without Sealant to Inflate a Tire (Not Punctured)

The kit includes:

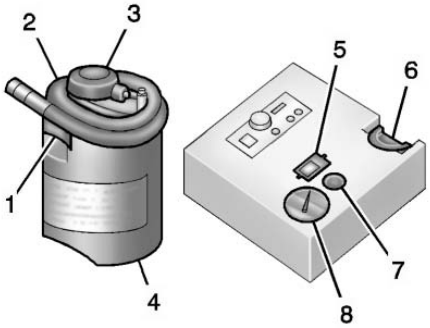

1. Sealant Canister Inlet Valve
2. Sealant/Air Hose
3. Base of Sealant Canister
4. Tire Sealant Canister
5. On/Off Button
6. Slot on Top of Compressor
7. Pressure Deflation Button
8. Pressure Gauge

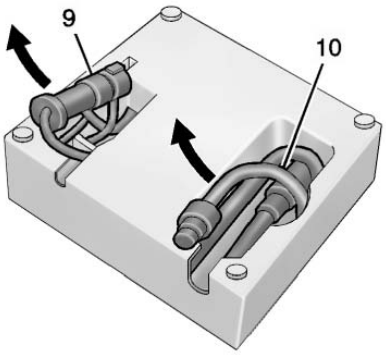

9. Power Plug
10. Air Only Hose

If a tire goes flat, avoid further tire and wheel damage by driving slowly to a level place. Turn on the hazard warning flashers. See *Hazard Warning Flashers on page 6-4*.

See *If a Tire Goes Flat on page 10-56* for other important safety warnings.

1. Remove the compressor from its storage location. See *Storing the Tire Sealant and Compressor Kit on page 10-65*.
2. Remove the air only hose (10) and the power plug (9) from the bottom of the compressor.
3. Place the compressor on the ground near the flat tire.

   Make sure the tire valve stem is positioned close to the ground so the hose will reach it.
4. Remove the valve stem cap from the flat tire by turning it counterclockwise.
5. Attach the air only hose (10) to the tire valve stem by turning it clockwise until tight.

Downloaded from www.Manualslib.com manuals search engine

6. Plug the power plug (9) into the accessory power outlet in the vehicle. Unplug all items from other accessory power outlets. See *Power Outlets on page 5-6*.

   If the vehicle has an accessory power outlet, do not use the cigarette lighter.

   If the vehicle only has a cigarette lighter, use the cigarette lighter.

   Do not pinch the power plug cord in the door or window.
7. Start the vehicle. The vehicle must be running while using the air compressor.
8. Press the on/off button (5) to turn the tire sealant and compressor kit on.

   The compressor will inflate the tire with air only.
9. Inflate the tire to the recommended inflation pressure using the pressure gauge (8). The recommended inflation pressure can be found on the Tire and Loading Information label. See *Tire Pressure on page 10-43*.

   The pressure gauge (8) may read higher than the actual tire pressure while the compressor is on. Turn the compressor off to get an accurate pressure reading. The compressor may be turned on/off until the correct pressure is reached.

Notice: **If the recommended pressure cannot be reached after approximately 25 minutes, the vehicle should not be driven farther. The tire is too severely damaged and the tire sealant and compressor kit cannot inflate the tire. Remove the power plug from the accessory power outlet and unscrew the inflating hose from the tire valve. See *Roadside Assistance Program on page 13-5*.**

10. Press the on/off button (5) to turn the tire sealant and compressor kit off.

    Be careful while handling the compressor as it could be warm after usage.
11. Unplug the power plug (9) from the accessory power outlet in the vehicle.
12. Turn the air only hose (10) counterclockwise to remove it from the tire valve stem.
13. Replace the tire valve stem cap.
14. Return the air only hose (10) and power plug (9) back to their original storage location.
15. Return the equipment to its original storage location in the vehicle.

Downloaded from www.Manualslib.com manuals search engine

The tire sealant and compressor kit has accessory adapters located in a compartment on the bottom of its housing that can be used to inflate air mattresses, balls, etc.

Storing the Tire Sealant and Compressor Kit

The tire sealant and compressor kit is located in the rear storage area on the passenger side.

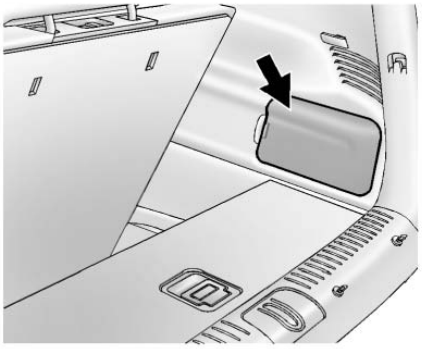

1. Remove the cover to access the tire sealant and compressor kit.

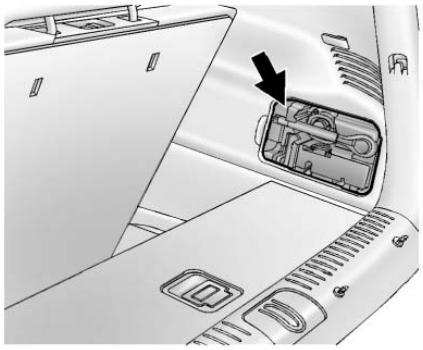

2. Remove the tire sealant and compressor kit.

To store the tire sealant and compressor kit, reverse the steps.

Tire Changing

Removing the Tire Changing Tools

To access the tire changing tools:

1. Open the liftgate. See *Liftgate on page 2-8*.

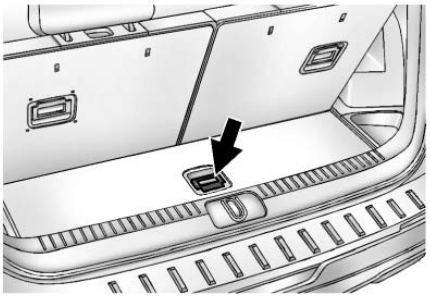

2. Lift the handle to raise the cover.

Downloaded from www.Manualslib.com manuals search engine

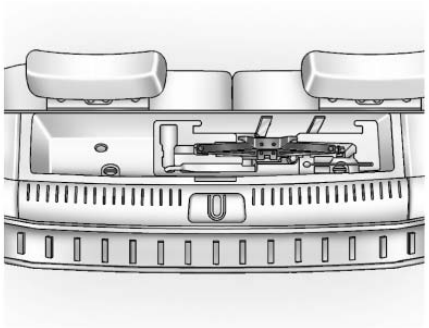

3. Remove the jack and tire changing tools.

Removing the Spare Tire

The spare tire is stored under the vehicle. To access the spare tire:

1. Open the storage in the load compartment.

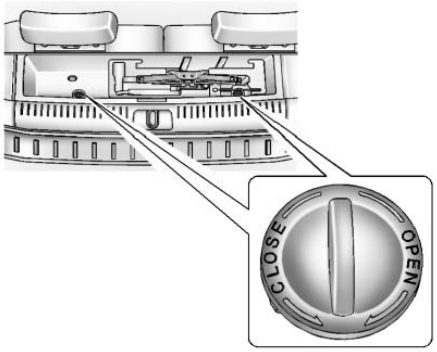

2. Remove the two wheel bolt caps.

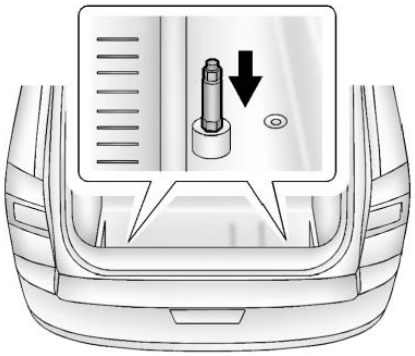

3. Attach the extension to the wheel bolt.
4. Attach the wheel wrench to the extension.

Downloaded from www.Manualslib.com manuals search engine

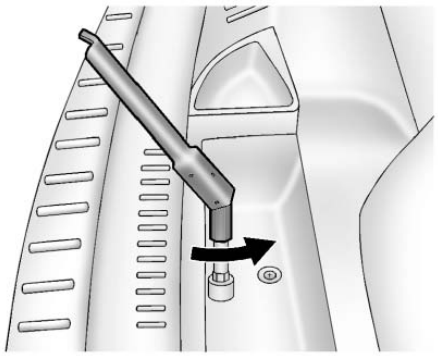

5. Turn the bolt counterclockwise until resistance is noticed. Continue with the other bolt in the same way.

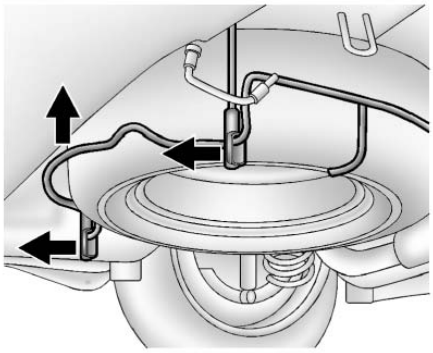

6. Lift the spare tire holder and unhook both catches.
7. Lower the spare tire.

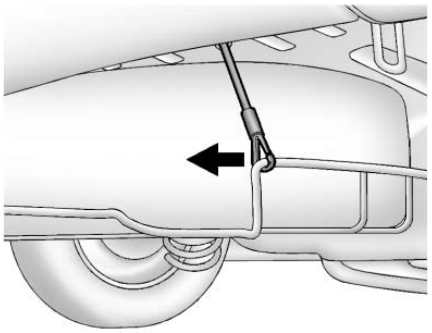

8. Detach the safety cable.
9. Lower the holder all the way and remove the spare tire.
10. Place the spare tire near the tire being changed.

Downloaded from www.Manualslib.com manuals search engine

Removing the Flat Tire and Installing the Spare Tire

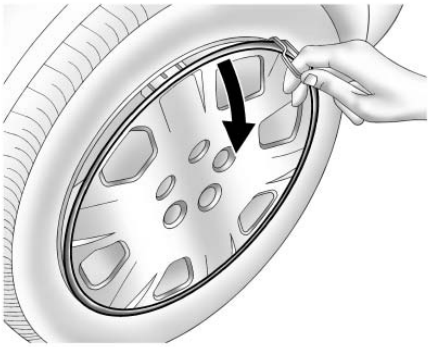

1. Remove the wheel cover.

   The cover does not need to be removed if the wheel bolts are visible. Do not remove the retaining rings on the wheel bolts.

   Disengage the wheel bolt caps with a screwdriver and remove them if the vehicle has alloy wheels. To protect the wheel place a soft cloth between the screwdriver and the alloy wheel.

After removing the wheel cover, use the following instructions to remove the flat tire and install the spare tire.

1. Do a safety check before proceeding. See *If a Tire Goes Flat on page 10-56* for more information.

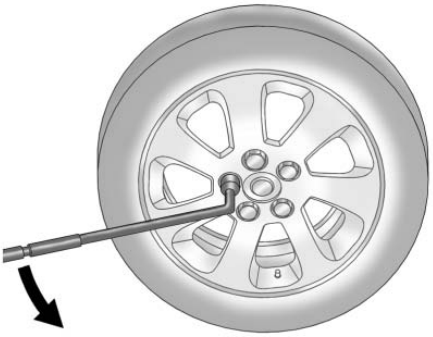

2. Turn the wheel wrench counterclockwise once on each wheel nut to loosen it. Do not remove them yet.
3. Place the jack near the flat tire.
4. Place the jack under the vehicle.
5. Attach the jack handle extension to the jack by sliding the hook through the end of the jack.

Notice: **Make sure that the jack lift head is in the correct position or you may damage your vehicle. The repairs would not be covered by your warranty.**

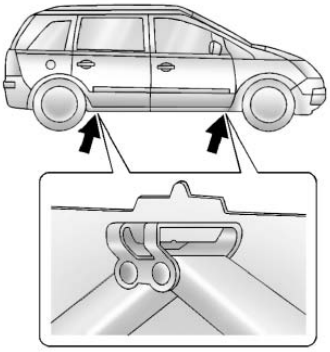

6. Position the jack lift head at the jack location nearest the flat tire. The location is indicated by a notch in the flange. The jack must not be used in any other position.

Downloaded from www.Manualslib.com manuals search engine

⚠ WARNING

Getting under a vehicle when it is lifted on a jack is dangerous. If the vehicle slips off the jack, you could be badly injured or killed. Never get under a vehicle when it is supported only by a jack.

⚠ WARNING

Raising the vehicle with the jack improperly positioned can damage the vehicle and even make the vehicle fall. To help avoid personal injury and vehicle damage, be sure to fit the jack lift head into the proper location before raising the vehicle.

⚠ WARNING

Lifting a vehicle and getting under it to do maintenance or repairs is dangerous without the appropriate safety equipment and training. If a jack is provided with the vehicle, it is designed only for changing a flat tire. If it is used for anything else, you or others could be badly injured or killed if the vehicle slips off the jack. If a jack is provided with the vehicle, only use it for changing a flat tire.

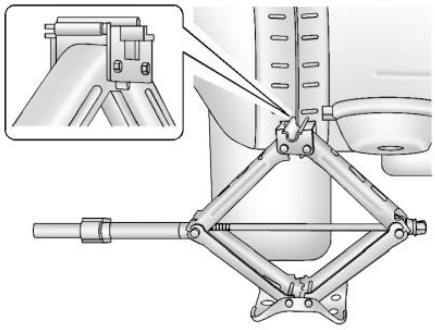

7. Raise the jack by turning the handle clockwise until it comes in contact with the notch in the flange.

   Raise the vehicle far enough off the ground so there is enough room for the road tire to clear the ground.

Downloaded from www.Manualslib.com manuals search engine

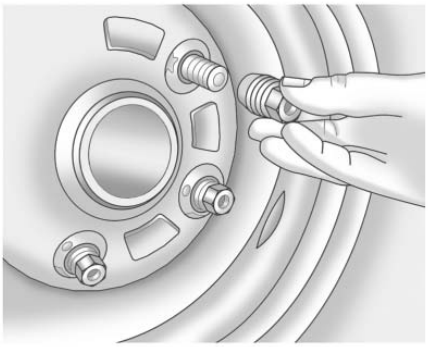

8. Remove all of the wheel nuts.
9. Remove the flat tire.

⚠ WARNING

Rust or dirt on a wheel, or on the parts to which it is fastened, can make wheel nuts become loose after time. The wheel could come off and cause an accident. When changing a wheel, remove any rust or dirt from places where the wheel attaches to the vehicle. In

(Continued)

WARNING (Continued)

an emergency, a cloth or a paper towel can be used; however, use a scraper or wire brush later to remove all rust or dirt.

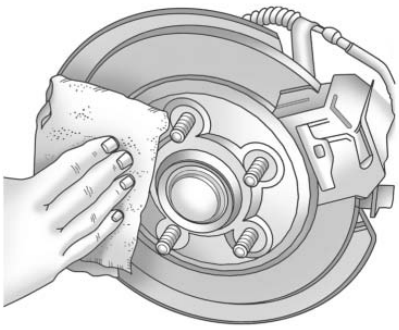

10. Remove any rust or dirt from the wheel bolts, mounting surfaces, and spare wheel.
11. Place the spare tire on the wheel-mounting surface.

⚠ WARNING

Never use oil or grease on bolts or nuts because the nuts might come loose. The vehicle's wheel could fall off, causing a crash.

12. Reinstall the wheel nuts. Tighten each nut by hand until the wheel is held against the hub.
13. Lower the vehicle by turning the jack handle counterclockwise.

⚠ WARNING

Wheel nuts that are improperly or incorrectly tightened can cause the wheels to become loose or come off. The wheel nuts should be tightened with a torque wrench to the proper torque specification after replacing. Follow the torque specification supplied by the

(Continued)

Downloaded from www.Manualslib.com manuals search engine

WARNING (Continued)

aftermarket manufacturer when using accessory locking wheel nuts. See *Capacities and Specifications on page 12-2* for original equipment wheel nut torque specifications.

Notice: **Improperly tightened wheel nuts can lead to brake pulsation and rotor damage. To avoid expensive brake repairs, evenly tighten the wheel nuts in the proper sequence and to the proper torque specification. See *Capacities and Specifications on page 12-2* for the wheel nut torque specification.**

14. Tighten the wheel nuts firmly in a crisscross sequence, as shown.
15. Lower the jack all the way and remove the jack from under the vehicle.
16. Tighten the wheel nuts firmly with the wheel wrench.

Reinstall the wheel cover if it was removed.

Notice: **Wheel covers will not fit on the vehicle's compact spare. If you try to put a wheel cover on the compact spare, the cover or the spare could be damaged.**

Storing a Flat or Spare Tire and Tools

⚠ WARNING

Storing a jack, a tire, or other equipment in the passenger compartment of the vehicle could cause injury. In a sudden stop or collision, loose equipment could strike someone. Store all these in the proper place.

Reverse the instructions for removing the spare tire and tools to store the spare tire.

1. Place the spare tire in the tire holder with the valve stem up.
2. Lift the spare tire holder and insert the safety cable.

Downloaded from www.Manualslib.com manuals search engine

3. Lift the spare tire holder and engage it in both catches. The open side of the catches must point in the direction of travel.
4. Turn the wheel wrench clockwise to tighten both hexagon bolts.
5. Close and lock the storage compartment cover.
6. Replace the two wheel bolt caps.
7. Store the wheel wrench and extension.
8. Close the storage compartment cover.

Full-Size Spare Tire

The full-size spare tire that came with the vehicle was fully inflated when new, however, it can lose air over time. Check the inflation pressure regularly. See *Tire Pressure on page 10-43* and *Vehicle Load Limits on page 9-9* for information regarding proper tire inflation and loading the vehicle. For instructions on how to remove, install, or store a spare tire, see *Tire Changing on page 10-65*.

After installing the spare tire on the vehicle, stop as soon as possible and check that the spare is correctly inflated. The spare tire is made to perform well at speeds up to 112 km/h (70 mph) at the recommended inflation pressure, so you can finish your trip.

Have the damaged or flat road tire repaired or replaced and installed back onto the vehicle as soon as possible so the spare tire will be available in case it is needed again. Do not mix tires and wheels of different sizes, because they will not fit. Keep the spare tire and its wheel together.

Downloaded from www.Manualslib.com manuals search engine

Jump Starting

For more information about the vehicle battery, see *Battery on page 10-21*.

If the battery has run down, try to use another vehicle and some jumper cables to start your vehicle. Be sure to use the following steps to do it safely.

⚠ WARNING

Batteries can hurt you. They can be dangerous because:

- They contain acid that can burn you.
- They contain gas that can explode or ignite.
- They contain enough electricity to burn you.

If you do not follow these steps exactly, some or all of these things can hurt you.

Notice: **Ignoring these steps could result in costly damage to the vehicle that would not be covered by the warranty.**

Trying to start the vehicle by pushing or pulling it will not work, and it could damage the vehicle.

The jump start positive post is located in the engine compartment on the driver side of the vehicle. See *Engine Compartment Overview on page 10-6*.

The jump start negative grounding point is the engine block or an engine mounting bolt. Connect to a spot as far away from the discharged battery as possible.

These locations are used instead of a direct connection to the battery.

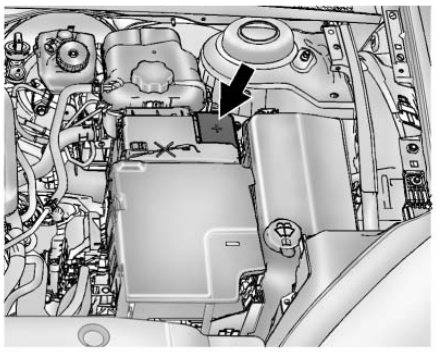

The positive jump start connection is under a trim cover. Open the cover door to expose the terminal.

1. Check the other vehicle. It must have a 12-volt battery with a negative ground system.

Notice: **Only use a vehicle that has a 12-volt system with a negative ground for jump starting. If the other vehicle does not have a 12-volt system with a negative ground, both vehicles can be damaged.**

2. Position the two vehicles so that they are not touching.

Downloaded from www.Manualslib.com manuals search engine

3. Set the parking brake firmly and put the shift lever in P (Park) with an automatic transmission, or neutral with a manual transmission. See *Shifting Into Park on page 9-18* with an automatic transmission, or *Parking on page 9-20* with a manual transmission.

Notice: **If any accessories are left on or plugged in during the jump starting procedure, they could be damaged. The repairs would not be covered by the vehicle warranty. Whenever possible, turn off or unplug all accessories on either vehicle when jump starting the vehicle.**

4. Turn the ignition to LOCK/OFF. Turn off all lights and accessories in both vehicles, except the hazard warning flashers if needed.

⚠ WARNING

An electric fan can start up even when the engine is not running and can injure you. Keep hands, clothing and tools away from any underhood electric fan.

⚠ WARNING

Using a match near a battery can cause battery gas to explode. People have been hurt doing this, and some have been blinded. Use a flashlight if you need more light.

Be sure the battery has enough water. You do not need to add water to the battery installed in your new vehicle. But if a battery has filler caps, be sure the right amount of fluid is there. If it is low,

(Continued)

WARNING (Continued)

add water to take care of that first. If you do not, explosive gas could be present.

Battery fluid contains acid that can burn you. Do not get it on you. If you accidentally get it in your eyes or on your skin, flush the place with water and get medical help immediately.

⚠ WARNING

Fans or other moving engine parts can injure you badly. Keep your hands away from moving parts once the engine is running.

5. Connect one end of the red positive (+) cable to the jump start positive (+) post.

Downloaded from www.Manualslib.com manuals search engine

6. Connect the other end of the red positive (+) cable to the positive (+) terminal of the good battery.
7. Connect one end of the black negative (–) cable to the negative (–) terminal of the good battery.
8. Connect the other end of the black negative (–) cable to the negative (–) grounding point.
9. Start the engine in the vehicle with the good battery and run the engine at idle speed for at least four minutes.
10. Try to start the vehicle that had the dead battery. If it will not start after a few tries, it probably needs service.

Notice: **If the jumper cables are connected or removed in the wrong order, electrical shorting may occur and damage the vehicle. The repairs would not be covered by the vehicle warranty. Always connect and remove the jumper cables in the correct order, making sure that the cables do not touch each other or other metal.**

Jumper Cable Removal

Reverse the sequence exactly when removing the jumper cables.

Towing

Towing the Vehicle

Notice: **Incorrectly towing a disabled vehicle may cause damage. The damage would not be covered by the vehicle warranty.**

Have the vehicle towed on a flatbed car carrier or a wheel lift tow truck. If a wheel lift tow truck is used, the drive wheels cannot contact the road while the vehicle is being towed. A wheel dolly must be used to lift all drive wheels off the ground.

Consult your dealer or a professional towing service if the disabled vehicle must be towed.

To tow the vehicle behind another vehicle for recreational purposes, such as behind a motor home, see “Recreational Vehicle Towing” in this section.

Downloaded from www.Manualslib.com manuals search engine

Recreational Vehicle Towing

Recreational vehicle towing refers to towing the vehicle behind another vehicle, such as behind a motor home. The two most common types of recreational vehicle towing are known as dinghy towing and dolly towing. Dinghy towing is towing the vehicle with all four wheels on the ground. Dolly towing is towing the vehicle with two wheels on the ground and two wheels up on a device known as a dolly.

Here are some important things to consider before recreational vehicle towing:

- The towing capacity of the towing vehicle. Be sure to read the tow vehicle manufacturer's recommendations.
- How far will the vehicle be towed. Some vehicles have restrictions on how far and how long they can tow.
- Does the vehicle have the proper towing equipment. See your dealer or trailering professional for additional advice and equipment recommendations.
- Is the vehicle ready to be towed. Just as preparing the vehicle for a long trip, make sure the vehicle is prepared to be towed.

Dinghy Towing (With Automatic Transmission)

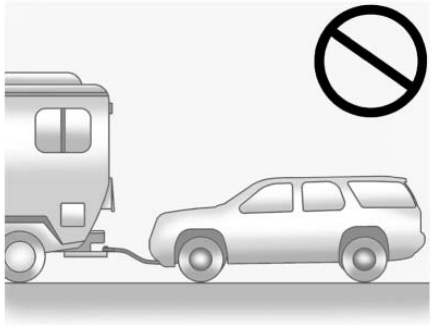

Notice: **If the vehicle is towed with all four wheels on the ground, the drivetrain components could be damaged. The repairs would not be covered by the vehicle warranty. Do not tow the vehicle with all four wheels on the ground.**

Vehicles with an automatic transmission should not be towed with all four wheels on the ground.

Downloaded from www.Manualslib.com manuals search engine

If the vehicle must be towed, a dolly should be used. See "Dolly Towing" that follows for more information.

Dinghy Towing (With Manual Transmission)

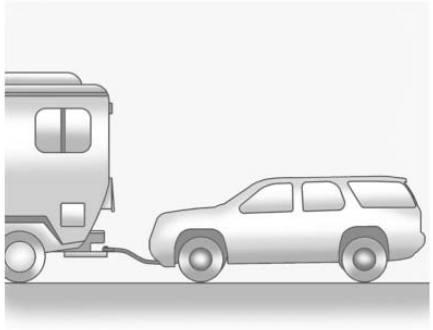

To dinghy tow the vehicle from the front with all four wheels on the ground:

1. Position the vehicle to tow and then secure it to the towing vehicle.
2. Shift the transmission to Neutral.
3. Turn the ignition to ACC/ ACCESSORY.
4. To prevent the battery from draining while the vehicle is being towed, remove fuses 21, 22, 23, and 24 from the instrument panel fuse block. See *Instrument Panel Fuse Block on page 10-34*.

Remember to reinstall the fuses once the destination has been reached.

Notice: **If 105 km/h (65 mph) is exceeded while towing the vehicle, it could be damaged. Never exceed 105 km/h (65 mph) while towing the vehicle.**

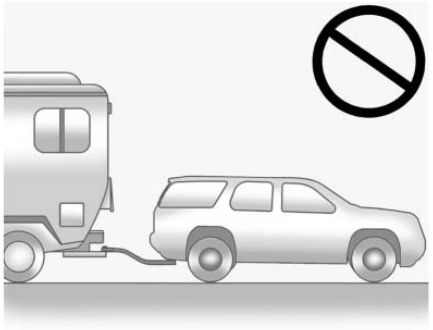

Notice: **Towing the vehicle from the rear could damage it. Also, repairs would not be covered by the vehicle warranty. Never have the vehicle towed from the rear.**

Downloaded from www.Manualslib.com manuals search engine

Dolly Towing

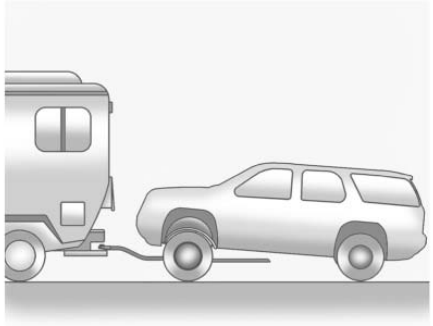

Tow the vehicle with the two rear wheels on the ground and the front wheels on a dolly.

To tow the vehicle with two wheels on the ground and a dolly:

1. Put the front wheels on a dolly.
2. Shift the automatic transmission into P (Park) or a manual transmission into 1 (First) gear.
3. Set the parking brake.
4. Clamp the steering wheel in a straight-ahead position with a clamping device designed for towing.
5. Remove the key from the ignition.
6. Secure the vehicle to the dolly.
7. Release the parking brake.

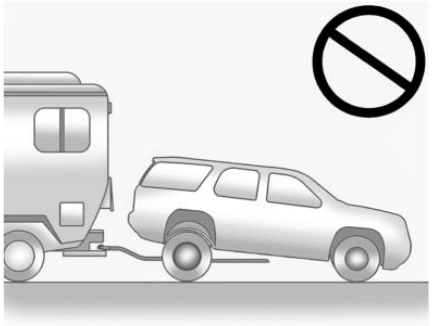

Notice: **Towing the vehicle from the rear could damage it. Also, repairs would not be covered by the vehicle warranty. Never have the vehicle towed from the rear.**

Appearance Care

Exterior Care

Washing the Vehicle

To preserve the vehicle's finish, wash it often and out of direct sunlight.

Notice: **Do not use petroleum-based, acidic, or abrasive cleaning agents as they can damage the vehicle's paint, metal, or plastic parts. If damage occurs, it would not be covered by the vehicle's warranty. Approved cleaning products can be obtained from your dealer. Follow all manufacturer directions regarding correct product usage, necessary safety precautions, and appropriate disposal of any vehicle care product.**

Downloaded from www.Manualslib.com manuals search engine

Notice: **Avoid using high-pressure washes closer than 30 cm (12 in) to the surface of the vehicle. Use of power washers exceeding 8,274 kPa (1,200 psi) can result in damage or removal of paint and decals.**

Rinse the vehicle well, before washing and after, to remove all cleaning agents completely. If they are allowed to dry on the surface, they could stain.

Dry the finish with a soft, clean chamois or an all-cotton towel to avoid surface scratches and water spotting.

Finish Care

Application of aftermarket clearcoat sealant/wax materials is not recommended. If painted surfaces are damaged, see your dealer to have the damage assessed and repaired. Foreign materials such as calcium chloride and other salts, ice melting agents, road oil and tar, tree sap, bird droppings, chemicals from industrial chimneys, etc., can damage the vehicle's finish if they remain on painted surfaces. Wash the vehicle as soon as possible. If necessary, use non-abrasive cleaners that are marked safe for painted surfaces to remove foreign matter.

Occasional hand waxing or mild polishing should be done to remove residue from the paint finish. See your dealer for approved cleaning products.

Do not apply waxes or polishes to uncoated plastic, vinyl, rubber, decals, simulated wood, or flat paint as damage can occur.

Notice: **Machine compounding or aggressive polishing on a basecoat/clearcoat paint finish may damage it. Use only non-abrasive waxes and polishes that are made for a basecoat/clearcoat paint finish on the vehicle.**

To keep the paint finish looking new, keep the vehicle garaged or covered whenever possible.

Protecting Exterior Bright Metal Parts

Regularly clean bright metal parts with water or chrome polish on chrome or stainless steel trim, if necessary.

For aluminum, never use auto or chrome polish, steam, or caustic soap to clean. A coating of wax, rubbed to high polish, is recommended for all bright metal parts.

Cleaning Exterior Lamps/ Lenses and Emblems

Use only lukewarm or cold water, a soft cloth, and a car washing soap to clean exterior lamps and lenses. Follow instructions under "Washing the Vehicle" later in this section.

Downloaded from www.Manualslib.com manuals search engine

Shutter System

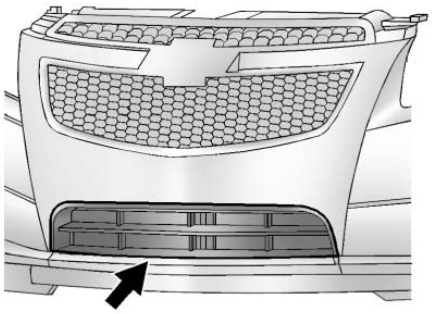

The vehicle may have a shutter system designed to help increase fuel economy. Keep the shutter system clean for proper operation.

Windshield and Wiper Blades

Clean the outside of the windshield with glass cleaner.

Clean rubber blades using lint-free cloth or paper towel soaked with windshield washer fluid or a mild detergent. Wash the windshield thoroughly when cleaning the blades. Bugs, road grime, sap, and a buildup of vehicle wash/wax treatments may cause wiper streaking.

Replace the wiper blades if they are worn or damaged. Damage can be caused by extreme dusty conditions, sand, salt, heat, sun, snow and ice.

Clear ice and snow from the wiper blades before using them. If frozen to the windshield, carefully loosen them or thaw them. Damaged wiper blades should be replaced. See *Wiper Blade Replacement on page 10-23* for more information.

Heavy snow or ice can overload the wipers. If the wiper motor overheats, the windshield wipers will stop until the motor cools and the wiper control is turned off. See *Electrical System Overload on page 10-30* for more information.

Weatherstrips

Apply silicone grease on weatherstrips to make them last longer, seal better, and not stick or squeak. Lubricate weatherstrips once a year. Black marks from rubber material on painted surfaces can be removed by rubbing with a clean cloth. See *Recommended Fluids and Lubricants on page 11-12*.

Tires

Use a stiff brush with tire cleaner to clean the tires.

Notice: **Using petroleum-based tire dressing products on the vehicle may damage the paint finish and/or tires. When applying a tire dressing, always wipe off any overspray from all painted surfaces on the vehicle.**

Downloaded from www.Manualslib.com manuals search engine

Wheels and Trim — Aluminum or Chrome

Use a soft, clean cloth with mild soap and water to clean the wheels. After rinsing thoroughly with clean water, dry with a soft, clean towel. A wax may then be applied.

Notice: **Chrome wheels and other chrome trim may be damaged if the vehicle is not washed after driving on roads that have been sprayed with magnesium, calcium, or sodium chloride. These chlorides are used on roads for conditions such as ice and dust. Always wash the chrome with soap and water after exposure.**

Notice: **To avoid surface damage, do not use strong soaps, chemicals, abrasive polishes, cleaners, brushes, or cleaners that contain acid on aluminum or chrome-plated wheels. Use only approved cleaners. Also, never drive a vehicle with aluminum or chrome-plated wheels through an automatic car wash that uses silicone carbide tire cleaning brushes. Damage could occur and the repairs would not be covered by the vehicle warranty.**

Steering, Suspension, and Chassis Components

Visually inspect front and rear suspension and steering system for damaged, loose, or missing parts or signs of wear. Inspect the power steering for proper hook-up, binding, leaks, cracks, chafing, etc. Visually check constant velocity joints, rubber boots, and axle seals for leaks.

Body Component Lubrication

Lubricate all key lock cylinders, hood hinges, liftgate hinges, and steel fuel door hinge unless the components are plastic. Applying silicone grease on weatherstrips with a clean cloth will make them last longer, seal better, and not stick or squeak.

Underbody Maintenance

Use plain water to flush dirt and debris from the vehicle's underbody. Your dealer or an underbody car washing system can do this. If not removed, rust and corrosion can develop.

Sheet Metal Damage

If the vehicle is damaged and requires sheet metal repair or replacement, make sure the body repair shop applies anti-corrosion material to parts repaired or replaced to restore corrosion protection.

Original manufacturer replacement parts will provide the corrosion protection while maintaining the vehicle warranty.

Downloaded from www.Manualslib.com manuals search engine

Finish Damage

Quickly repair minor chips and scratches with touch-up materials available from your dealer to avoid corrosion. Larger areas of finish damage can be corrected in your dealer's body and paint shop.

Chemical Paint Spotting

Airborne pollutants can fall upon and attack painted vehicle surfaces causing blotchy, ring-shaped discolorations, and small, irregular dark spots etched into the paint surface.

Interior Care

To prevent dirt particle abrasions, regularly clean the vehicle's interior. Immediately remove any soils. Note that newspapers or dark garments that can transfer color to home furnishings can also permanently transfer color to the vehicle's interior.

Use a soft bristle brush to remove dust from knobs and crevices on the instrument cluster. Using a mild soap solution, immediately remove hand lotions, sunscreen, and insect repellent from all interior surfaces or permanent damage may result.

Your dealer may have products for cleaning the interior. Use cleaners specifically designed for the surfaces being cleaned to prevent permanent damage. Apply all cleaners directly to the cleaning cloth. Do not spray cleaners directly on any switches or controls. Cleaners should be removed quickly. Never allow cleaners to remain on the surface being cleaned for extended periods of time.

Cleaners may contain solvents that can become concentrated in the interior. Before using cleaners, read and adhere to all safety instructions on the label. While cleaning the interior, maintain adequate ventilation by opening the doors and windows.

To prevent damage, do not clean the interior using the following cleaners or techniques:

- Never use a razor or any other sharp object to remove a soil from any interior surface.
- Never use a brush with stiff bristles.
- Never rub any surface aggressively or with excessive pressure.
- Do not use laundry detergents or dishwashing soaps with degreasers. For liquid cleaners, use approximately 20 drops per 3.78 L (1 gal) of water. A concentrated soap solution will leave a residue that creates streaks and attracts dirt. Do not use solutions that contain strong or caustic soap.
- Do not heavily saturate the upholstery when cleaning.
- Do not use solvents or cleaners containing solvents.

Downloaded from www.Manualslib.com manuals search engine

Interior Glass

To clean, use a terry cloth fabric dampened with water. Wipe droplets left behind with a clean dry cloth. Commercial glass cleaners may be used, if necessary, after cleaning the interior glass with plain water.

Notice: **To prevent scratching, never use abrasive cleaners on automotive glass. Abrasive cleaners or aggressive cleaning may damage the rear window defogger.**

Notice: **Cleaning the windshield with water during the first three to six months of ownership will reduce tendency to fog.**

Speaker Covers

Vacuum around a speaker cover gently, so that the speaker will not be damaged. Clean spots with just water and mild soap.

Coated Moldings

Coated moldings should be cleaned.

- When lightly soiled, wipe with a sponge or soft lint-free cloth dampened with water.
- When heavily soiled, use warm soapy water.

Fabric/Carpet/Suede

Start by vacuuming the surface using a soft brush attachment. If a rotating brush attachment is being used during vacuuming, only use it on the floor carpet. Before cleaning, gently remove as much of the soil as possible using one of the following techniques:

- Gently blot liquids with a paper towel. Continue blotting until no more soil can be removed.
- For solid soils, remove as much as possible prior to vacuuming.

To clean:

1. Saturate a clean lint-free colorfast cloth with water or club soda. Microfiber cloth is recommended to prevent lint transfer to the fabric or carpet.
2. Remove excess moisture by gently wringing until water does not drip from the cleaning cloth.
3. Start on the outside edge of the soil and gently rub toward the center. Fold the cleaning cloth to a clean area frequently to prevent forcing the soil in to the fabric.
4. Continue gently rubbing the soiled area until there is no longer any color transfer from the soil to the cleaning cloth.
5. If the soil is not completely removed, use a mild soap solution followed only by club soda or plain water.

Downloaded from www.Manualslib.com manuals search engine

If the soil is not completely removed, it may be necessary to use a commercial upholstery cleaner or spot lifter. Test a small hidden area for colorfastness before using a commercial upholstery cleaner or spot lifter. If ring formation occurs, clean the entire fabric or carpet.

Following the cleaning process, a paper towel can be used to blot excess moisture.

Cleaning High Gloss Surfaces and Vehicle Information and Radio Displays

For vehicles with high gloss surfaces or vehicle displays, use a microfiber cloth to wipe surfaces. Before wiping the surface with the microfiber cloth, use a soft bristle brush to remove dirt that could scratch the surface. Then use the microfiber cloth by gently rubbing to clean. Never use window cleaners or solvents. Periodically hand wash the microfiber cloth separately, using mild soap. Do not use bleach or fabric softener. Rinse thoroughly and air dry before next use.

Notice: **Do not attach a device with a suction cup to the display. This may cause damage and would not be covered by the warranty.**

Instrument Panel, Leather, Vinyl, & Other Plastic Surfaces

Use a soft microfiber cloth dampened with water to remove dust and loose dirt. For a more thorough cleaning, use a soft microfiber cloth dampened with a mild soap solution.

Notice: **Soaking or saturating leather, especially perforated leather, as well as other interior surfaces, may cause permanent damage. Wipe excess moisture from these surfaces after cleaning and allow them to dry naturally. Never use heat, steam, spot lifters, or spot removers. Do not use cleaners that contain silicone or wax-based products. Cleaners containing these solvents can permanently change the appearance and feel of leather or soft trim and are not recommended.**

Do not use cleaners that increase gloss, especially on the instrument panel. Reflected glare can decrease visibility through the windshield under certain conditions.

Notice: **Use of air fresheners may cause permanent damage to plastics and painted surfaces. If an air freshener comes in contact with any plastic or painted surface in the vehicle, blot immediately and clean with a soft cloth dampened with a mild soap solution. Damage caused by air fresheners would not be covered by the vehicle warranty.**

Cargo Cover and Convenience Net

Wash with warm water and mild detergent. Do not use chlorine bleach. Rinse with cold water, and then dry completely.

Downloaded from www.Manualslib.com manuals search engine

Care of Safety Belts

Keep belts clean and dry.

⚠ WARNING

Do not bleach or dye safety belts. It may severely weaken them. In a crash, they might not be able to provide adequate protection. Clean safety belts only with mild soap and lukewarm water.

Floor Mats

⚠ WARNING

If a floor mat is the wrong size or is not properly installed, it can interfere with the pedals. Interference with the pedals can cause unintended acceleration and/or increased stopping distance which can cause a crash and injury. Make sure the floor mat does not interfere with the pedals.

Use the following guidelines for proper floor mat usage.

- The original equipment floor mats were designed for your vehicle. If the floor mats need replacing, it is recommended that GM certified floor mats be purchased. Non-GM floor mats may not fit properly and may interfere with the accelerator or brake pedal. Always check that the floor mats do not interfere with the pedals.
- Use the floor mat with the correct side up. Do not turn it over.
- Do not place anything on top of the driver side floor mat.
- Use only a single floor mat on the driver side.
- Do not place one floor mat on top of another.

The driver side floor mat is held in place by a button-type retainer.

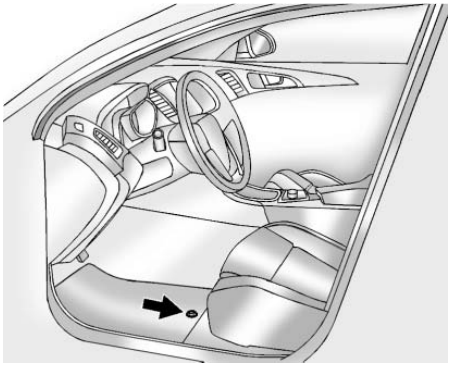

Removing and Replacing the Floor Mats

1. Pull up on the rear of the floor mat to unlock the retainer and remove.
2. Reinstall by lining up the floor mat retainer opening over the carpet retainer and snap into position.
3. Make sure the floor mat is properly secured and verify that it does not interfere with the pedals.

Downloaded from www.Manualslib.com manuals search engine

✍ NOTES

Downloaded from www.Manualslib.com manuals search engine

Service and Maintenance

General Information
General Information 11-1

Maintenance Schedule
Maintenance Schedule 11-2

Special Application Services
Special Application Services 11-8

Additional Maintenance and Care
Additional Maintenance and Care 11-8

Recommended Fluids, Lubricants, and Parts
Recommended Fluids and Lubricants 11-12
Maintenance Replacement Parts 11-13

Maintenance Records
Maintenance Records 11-14

General Information

Your vehicle is an important investment. This section describes the required maintenance for the vehicle. Follow this schedule to help protect against major repair expenses resulting from neglect or inadequate maintenance. It may also help to maintain the value of the vehicle if it is sold. It is the responsibility of the owner to have all required maintenance performed.

Your dealer has trained technicians who can perform required maintenance using genuine replacement parts. They have up-to-date tools and equipment for fast and accurate diagnostics. Many dealers have extended evening and Saturday hours, courtesy transportation, and online scheduling to assist with service needs.

Your dealer recognizes the importance of providing competitively priced maintenance and repair services. With trained technicians, the dealer is the place for routine maintenance such as oil changes and tire rotations and additional maintenance items like tires, brakes, batteries, and wiper blades.

Notice: **Damage caused by improper maintenance can lead to costly repairs and may not be covered by the vehicle warranty. Maintenance intervals, checks, inspections, recommended fluids, and lubricants are important to keep the vehicle in good working condition.**

The Tire Rotation and Required Services are the responsibility of the vehicle owner. It is recommended to have your dealer perform these services every 12 000 km/7,500 mi. Proper vehicle maintenance helps to keep the vehicle in good working condition, improves fuel economy, and reduces vehicle emissions.

Downloaded from www.Manualslib.com manuals search engine

Because of the way people use vehicles, maintenance needs vary. There may need to be more frequent checks and services. The Additional Required Services - Normal are for vehicles that:

- Carry passengers and cargo within recommended limits on the Tire and Loading Information label. See *Vehicle Load Limits on page 9-9*.
- Are driven on reasonable road surfaces within legal driving limits.
- Use the recommended fuel. See *Recommended Fuel on page 9-38*.

Refer to the information in the Maintenance Schedule Additional Required Services - Normal chart.

The Additional Required Services - Severe are for vehicles that are:

- Mainly driven in heavy city traffic in hot weather.
- Mainly driven in hilly or mountainous terrain.
- Frequently towing a trailer.
- Used for high speed or competitive driving.
- Used for taxi, police, or delivery service.

Refer to the information in the Maintenance Schedule Additional Required Services - Severe chart.

⚠ WARNING

Performing maintenance work can be dangerous and can cause serious injury. Perform maintenance work only if the required information, proper tools, and equipment are available. If they are not, see your dealer to have a trained technician do the work. See *Doing Your Own Service Work on page 10-4*.

Maintenance Schedule

Owner Checks and Services

At Each Fuel Stop

- Check the engine oil level. See *Engine Oil on page 10-7*.

Once a Month

- Check the tire inflation pressures. See *Tire Pressure on page 10-43*.
- Inspect the tires for wear. See *Tire Inspection on page 10-48*.
- Check the windshield washer fluid level. See *Washer Fluid on page 10-18*.

Engine Oil Change

When the CHANGE ENGINE OIL SOON DIC message or Code 82 DIC message displays, have the engine oil and filter changed within the next 1 000 km/600 mi. If driven under the best conditions, the engine oil life system might not

Downloaded from www.Manualslib.com manuals search engine

indicate the need for vehicle service for more than a year. The engine oil and filter must be changed at least once a year and the oil life system must be reset. Your trained dealer technician can perform this work. If the engine oil life system is reset accidentally, service the vehicle within 5 000 km/3,000 mi since the last service. Reset the oil life system when the oil is changed. See *Engine Oil Life System on page 10-9*.

Tire Rotation and Required Services Every 12 000 km/ 7,500 mi

Rotate the tires, if recommended for the vehicle, and perform the following services. See *Tire Rotation on page 10-49*.

- Check engine oil level and oil life percentage. If needed, change engine oil and filter, and reset oil life system. See *Engine Oil on page 10-7* and *Engine Oil Life System on page 10-9*.
- Check engine coolant level. See *Engine Coolant on page 10-13*.
- Check windshield washer fluid level. See *Washer Fluid on page 10-18*.
- Visually inspect windshield wiper blades for wear, cracking, or contamination. See *Exterior Care on page 10-78*. Replace worn or damaged wiper blades. See *Wiper Blade Replacement on page 10-23*.
- Check tire inflation pressures. See *Tire Pressure on page 10-43*.
- Inspect tire wear. See *Tire Inspection on page 10-48*.
- Visually check for fluid leaks.
- Inspect engine air cleaner filter. See *Engine Air Cleaner/Filter on page 10-11*.
- Inspect brake system.
- Visually inspect steering, suspension, and chassis components for damaged, loose, or missing parts or signs of wear. See *Exterior Care on page 10-78*.
- Check restraint system components. See *Safety System Check on page 3-23*.
- Visually inspect fuel system for damage or leaks.
- Visually inspect exhaust system and nearby heat shields for loose or damaged parts.
- Lubricate body components. See *Exterior Care on page 10-78*.
- Check starter switch. See *Starter Switch Check on page 10-22*.
- Check automatic transmission shift lock control function. See *Automatic Transmission Shift Lock Control Function Check on page 10-22*.

Downloaded from www.Manualslib.com manuals search engine

- Check ignition transmission lock. See *Ignition Transmission Lock Check on page 10-23*.
- Check parking brake and automatic transmission park mechanism. See *Park Brake and P (Park) Mechanism Check on page 10-23*.
- Check accelerator pedal for damage, high effort, or binding. Replace if needed.
- Visually inspect gas strut for signs of wear, cracks, or other damage. Check the hold open ability of the strut. See your dealer if service is required.
- Check tire sealant expiration date, if equipped. See *Tire Sealant and Compressor Kit on page 10-58*.
- Inspect sunroof track and seal, if equipped. See *Sunroof on page 2-16*.

Downloaded from www.Manualslib.com manuals search engine

Maintenance Schedule Additional Required Services – Normal	12 000 km/7,500 mi	24 000 km/15,000 mi	36 000 km/22,500 mi	48 000 km/30,000 mi	60 000 km/37,500 mi	72 000 km/45,000 mi	84 000 km/52,500 mi	96 000 km/60,000 mi	108 000 km/67,500 mi	120 000 km/75,000 mi	132 000 km/82,500 mi	144 000 km/90,000 mi	156 000 km/97,500 mi	168 000 km/105,000 mi	180 000 km/112,500 mi	192 000 km/120,000 mi	204 000 km/127,500 mi	216 000 km/135,000 mi	228 000 km/142,500 mi	240 000 km/150,000 mi
Rotate tires and perform Required Services. Check engine oil level and oil life percentage. Change engine oil and filter, if needed.	✓	✓	✓	✓	✓	✓	✓	✓	✓	✓	✓	✓	✓	✓	✓	✓	✓	✓	✓	✓
Inspect evaporative control system. (1)						✓						✓						✓		
Replace engine air cleaner filter. (2)						✓						✓						✓		
Replace spark plugs. Inspect spark plug wires.													✓							
Change automatic transmission fluid, if equipped. If filter is serviceable, change filter.													✓							
Drain, flush, and fill engine cooling system. (3)																				✓
Visually inspect accessory drive belts. (4)																				✓
Replace brake/clutch fluid. (5)				✓				✓				✓				✓				✓

Downloaded from www.Manualslib.com manuals search engine

Footnotes — Maintenance Schedule Additional Required Services — Normal

(1) Check all fuel and vapor lines and hoses for proper hook-up, routing, and condition. Check that the purge valve, if the vehicle has one, works properly. Replace as needed.

(2) Or every four years, whichever comes first.

(3) Or every five years, whichever comes first. See *Cooling System on page 10-13*.

(4) Or every 10 years, whichever comes first. Inspect for fraying, excessive cracking, or damage; replace, if needed.

(5) Or every two years, whichever comes first.

Downloaded from www.Manualslib.com manuals search engine

Maintenance Schedule Additional Required Services – Severe	12 000 km/7,500 mi	24 000 km/15,000 mi	36 000 km/22,500 mi	48 000 km/30,000 mi	60 000 km/37,500 mi	72 000 km/45,000 mi	84 000 km/52,500 mi	96 000 km/60,000 mi	108 000 km/67,500 mi	120 000 km/75,000 mi	132 000 km/82,500 mi	144 000 km/90,000 mi	156 000 km/97,500 mi	168 000 km/105,000 mi	180 000 km/112,500 mi	192 000 km/120,000 mi	204 000 km/127,500 mi	216 000 km/135,000 mi	228 000 km/142,500 mi	240 000 km/150,000 mi
Rotate tires and perform Required Services. Check engine oil level and oil life percentage. Change engine oil and filter, if needed.	✓	✓	✓	✓	✓	✓	✓	✓	✓	✓	✓	✓	✓	✓	✓	✓	✓	✓	✓	✓
Inspect evaporative control system. (1)						✓						✓						✓		
Replace engine air cleaner filter. (2)						✓						✓						✓		
Change automatic transmission fluid, if equipped. If filter is serviceable, change filter.						✓						✓						✓		
Replace spark plugs. Inspect spark plug wires.													✓							
Drain, flush, and fill engine cooling system. (3)																				✓
Visually inspect accessory drive belts. (4)																				✓
Replace brake/clutch fluid. (5)				✓				✓				✓				✓				✓

Downloaded from www.Manualslib.com manuals search engine

Footnotes — Maintenance Schedule Additional Required Services — Severe

(1) Check all fuel and vapor lines and hoses for proper hook-up, routing, and condition. Check that the purge valve, if the vehicle has one, works properly. Replace as needed.

(2) Or every four years, whichever comes first.

(3) Or every five years, whichever comes first. See *Cooling System on page 10-13*.

(4) Or every 10 years, whichever comes first. Inspect for fraying, excessive cracking, or damage; replace, if needed.

(5) Or every two years, whichever comes first.

Special Application Services

- Severe Commercial Use Vehicles Only: Lubricate chassis components every 5 000 km/ 3,000 mi.
- Have underbody flushing service performed once a year.

Additional Maintenance and Care

Your vehicle is an important investment and caring for it properly may help to avoid future costly repairs. To maintain vehicle performance, additional maintenance services may be required. It is recommended that your dealer perform these services — their trained dealer technicians know your vehicle best. Your dealer can also perform a thorough assessment with a multi-point inspection to recommend when your vehicle may need attention. The following list is intended to explain the services and conditions to look for that may indicate services are required.

Downloaded from www.Manualslib.com manuals search engine

Battery

The battery supplies power to start the engine and operate any additional electrical accessories.

- To avoid break-down or failure to start the vehicle, maintain a battery with full cranking power.
- Trained dealer technicians have the diagnostic equipment to test the battery and ensure that the connections and cables are corrosion-free.

Belts

- Belts may need replacing if they squeak or show signs of cracking or splitting.
- Trained dealer technicians can inspect the belts and recommend replacement when necessary.

Brakes

Brakes stop the vehicle and are crucial to safe driving.

- Signs of brake wear may include chirping, grinding, or squealing noises, or difficulty stopping.
- Trained dealer technicians have access to tools and equipment to inspect the brakes and recommend quality parts engineered for the vehicle.

Fluids

Proper fluid levels and approved fluids protect the vehicle's systems and components. See *Recommended Fluids and Lubricants on page 11-12* for GM approved fluids.

- Engine oil and windshield washer fluid levels should be checked at every fuel fill.
- Instrument cluster lights may come on to indicate that fluids may be low and need to be filled.

Hoses

Hoses transport fluids and should be regularly inspected to ensure that there are no cracks or leaks. With a multi-point inspection, your dealer can inspect the hoses and advise if replacement is needed.

Lamps

Properly working headlamps, taillamps, and brake lamps are important to see and be seen on the road.

- Signs that the headlamps need attention include dimming, failure to light, cracking, or damage. The brake lamps need to be checked periodically to ensure that they light when braking.

Downloaded from www.Manualslib.com manuals search engine

- With a multi-point inspection, your dealer can check the lamps and note any concerns.

Shocks and Struts

Shocks and struts help aid in control for a smoother ride.

- Signs of wear may include steering wheel vibration, bounce/sway while braking, longer stopping distance, or uneven tire wear.
- As part of the multi-point inspection, trained dealer technicians can visually inspect the shocks and struts for signs of leaking, blown seals, or damage, and can advise when service is needed.

Tires

Tires need to be properly inflated, rotated, and balanced. Maintaining the tires can save money, fuel, and can reduce the risk of tire failure.

- Signs that the tires need to be replaced include three or more visible treadwear indicators; cord or fabric showing through the rubber; cracks or cuts in the tread or sidewall; or a bulge or split in the tire.
- Trained dealer technicians can inspect and recommend the right tires. Your dealer can also provide tire/wheel balancing services to ensure smooth vehicle operation at all speeds. Your dealer sells and services name brand tires.

Vehicle Care

To help keep the vehicle looking like new, vehicle care products are available from your dealer. For information on how to clean and protect the vehicle's interior and exterior, see *Interior Care on page 10-82* and *Exterior Care on page 10-78*.

Downloaded from www.Manualslib.com manuals search engine

Wheel Alignment

Wheel alignment is critical for ensuring that the tires deliver optimal wear and performance.

- Signs that the alignment may need to be adjusted include pulling, improper vehicle handling, or unusual tire wear.
- Your dealer has the required equipment to ensure proper wheel alignment.

Windshield

For safety, appearance, and the best viewing, keep the windshield clean and clear.

- Signs of damage include scratches, cracks, and chips.
- Trained dealer technicians can inspect the windshield and recommend proper replacement if needed.

Wiper Blades

Wiper blades need to be cleaned and kept in good condition to provide a clear view.

- Signs of wear include streaking, skipping across the windshield, and worn or split rubber.
- Trained dealer technicians can check the wiper blades and replace them when needed.

Downloaded from www.Manualslib.com manuals search engine

Recommended Fluids, Lubricants, and Parts

Recommended Fluids and Lubricants

Usage	Fluid/Lubricant
Engine Oil	Use only engine oil licensed to the dexos1 specfication, or equivalent, of the proper SAE viscosity grade. ACDelco dexos1 Synthetic Blend is recommended. See *Engine Oil on page 10-7*.
Engine Coolant	50/50 mixture of clean, drinkable water and use only DEX-COOL Coolant. See *Engine Coolant on page 10-13*.
Hydraulic Brake/Clutch System	DOT 4 Hydraulic Brake Fluid (GM Part No. 88958860, in Canada 88901244).
Windshield Washer	Automotive windshield washer fluid that meets regional freeze protection requirements.
Automatic Transmission	DEXRON®-VI Automatic Transmission Fluid.
Manual Transmission	Manual Transmission Fluid (GM Part No. 19259104, in Canada 19259105).
Key Lock Cylinders	Multi-Purpose Lubricant, Superlube (GM Part No. 12346241, in Canada 10953474).
Hood Latch Assembly, Secondary Latch, Pivots, Spring Anchor, and Release Pawl	Lubriplate Lubricant Aerosol (GM Part No. 89021668, in Canada 89021674) or lubricant meeting requirements of NLGI #2, Category LB or GC-LB.

Downloaded from www.Manualslib.com manuals search engine

Usage	Fluid/Lubricant
Hood and Door Hinges	Multi-Purpose Lubricant, Superlube (GM Part No. 12346241, in Canada 10953474).
Weatherstrip Conditioning	Weatherstrip Lubricant (GM Part No. 3634770, in Canada 10953518) or Dielectric Silicone Grease (GM Part No. 12345579, in Canada 10953481).

Maintenance Replacement Parts

Replacement parts identified below by name, part number, or specification can be obtained from your dealer.

Part	GM Part Number	ACDelco Part Number
Engine Air Cleaner/Filter	13272719	—
Engine Oil Filter	12605566	PF457G
Passenger Compartment Air Filter		
with RPO C42 or C68	13271191	—
with RPO C67	13271190	—
Spark Plugs	12620540	41–108
Wiper Blades		
Driver Side	96845746	—
Passenger Side	96845748	—
Rear	95018643	—

Downloaded from www.Manualslib.com manuals search engine

Maintenance Records

After the scheduled services are performed, record the date, odometer reading, who performed the service, and the type of services performed in the boxes provided. Retain all maintenance receipts.

Date	Odometer Reading	Serviced By	Services Performed

Downloaded from www.Manualslib.com manuals search engine

Date	Odometer Reading	Serviced By	Services Performed

Downloaded from www.Manualslib.com manuals search engine

11-16 Service and Maintenance

Date	Odometer Reading	Serviced By	Services Performed

Downloaded from www.Manualslib.com manuals search engine

Technical Data

Vehicle Identification
Vehicle Identification Number (VIN) 12-1
Service Parts Identification Label 12-1

Vehicle Data
Capacities and Specifications 12-2
Engine Drive Belt Routing . . . 12-3

Vehicle Identification

Vehicle Identification Number (VIN)

This legal identifier is in the front corner of the instrument panel, on the left side of the vehicle. It can be seen through the windshield from outside. The VIN also appears on the Vehicle Certification and Service Parts labels and certificates of title and registration.

Engine Identification

The eighth character in the VIN is the engine code. This code identifies the vehicle's engine, specifications, and replacement parts. See “Engine Specifications” under *Capacities and Specifications on page 12-2* for the vehicle's engine code.

Service Parts Identification Label

This label, in either the glove box or the trunk area, has the following information:

- Vehicle Identification Number (VIN).
- Model designation.
- Paint information.
- Production options and special equipment.

Do not remove this label from the vehicle.

Downloaded from www.Manualslib.com manuals search engine

Vehicle Data

Capacities and Specifications

The following approximate capacities are given in metric and English conversions. See *Recommended Fluids and Lubricants on page 11-12* for more information.

Application	Capacities	
	Metric	English
Air Conditioning Refrigerant R134a	For the air conditioning system refrigerant charge amount, see the refrigerant label located under the hood. See your dealer for more information.	
Cooling System	7.1 L	7.5 qt
Engine Oil with Filter	4.7 L	5.0 qt
Fuel Tank	66.5 L	17.6 gal
Automatic Transmission Fluid	5.0 L	5.3 qt
Wheel Nut Torque	140 N•m	100 lb ft
All capacities are approximate. When adding, be sure to fill to the approximate level, as recommended in this manual. Recheck fluid level after filling.		

Engine Specifications

Engine	VIN Code	Transmission	Spark Plug Gap
2.4L L4	T	Automatic and Manual	.9 mm (0.035 in)

Downloaded from www.Manualslib.com manuals search engine

Engine Drive Belt Routing

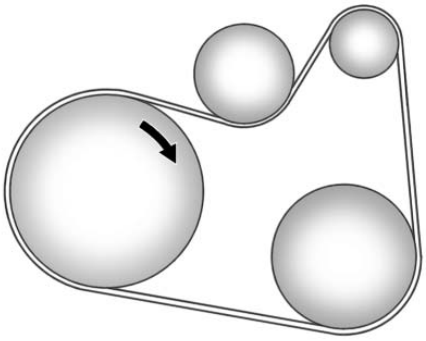

Downloaded from www.Manualslib.com manuals search engine

✍ NOTES

Downloaded from www.Manualslib.com manuals search engine

Customer Information

Customer Information
Customer Satisfaction Procedure 13-1
Customer Assistance Offices 13-3
Customer Assistance for Text Telephone (TTY) Users 13-4
Online Owner Center 13-4
GM Mobility Reimbursement Program 13-5
Roadside Assistance Program 13-5
Scheduling Service Appointments 13-7
Courtesy Transportation Program 13-7
Collision Damage Repair 13-9
Service Publications Ordering Information 13-11

Reporting Safety Defects
Reporting Safety Defects to the United States Government 13-12
Reporting Safety Defects to the Canadian Government 13-13
Reporting Safety Defects to General Motors 13-13

Vehicle Data Recording and Privacy
Vehicle Data Recording and Privacy 13-14
Event Data Recorders 13-14
OnStar® 13-15
Radio Frequency Identification (RFID) 13-15
Radio Frequency Statement 13-15

Customer Information

Customer Satisfaction Procedure

Your satisfaction and goodwill are important to your dealer and to Chevrolet. Normally, any concerns with the sales transaction or the operation of the vehicle will be resolved by your dealer's sales or service departments. Sometimes, however, despite the best intentions of all concerned, misunderstandings can occur. If your concern has not been resolved to your satisfaction, the following steps should be taken:

STEP ONE: Discuss your concern with a member of dealership management. Normally, concerns can be quickly resolved at that level. If the matter has already been reviewed with the sales, service, or parts manager, contact the owner of your dealership or the general manager.

Downloaded from www.Manualslib.com manuals search engine

STEP TWO: If after contacting a member of dealership management, it appears your concern cannot be resolved by your dealership without further help, in the U.S., call the Chevrolet Customer Assistance Center at 1-800-222-1020. In Canada, call General Motors of Canada Customer Care Centre at 1-800-263-3777 (English), or 1-800-263-7854 (French).

We encourage you to call the toll-free number in order to give your inquiry prompt attention. Have the following information available to give the Customer Assistance representative:

- Vehicle Identification Number (VIN). This is available from the vehicle registration or title, or the plate at the top left of the instrument panel and visible through the windshield.
- Dealership name and location.
- Vehicle delivery date and present mileage.

When contacting Chevrolet, remember that your concern will likely be resolved at a dealer's facility. That is why we suggest following Step One first.

STEP THREE — U.S. Owners: Both General Motors and your dealer are committed to making sure you are completely satisfied with the new vehicle. However, if you continue to remain unsatisfied after following the procedure outlined in Steps One and Two, you can file with the Better Business Bureau (BBB) Auto Line® Program to enforce your rights.

The BBB Auto Line Program is an out-of-court program administered by the Council of Better Business Bureaus to settle automotive disputes regarding vehicle repairs or the interpretation of the New Vehicle Limited Warranty. Although you may be required to resort to this informal dispute resolution program prior to filing a court action, use of the program is free of charge and your case will generally be heard within 40 days. If you do not agree with the decision given in your case, you may reject it and proceed with any other venue for relief available to you.

You may contact the BBB Auto Line Program using the toll-free telephone number or write them at the following address:

BBB Auto Line Program
Council of Better Business Bureaus, Inc.
4200 Wilson Boulevard
Suite 800
Arlington, VA 22203-1838

Telephone: 1-800-955-5100
www.dr.bbb.org/goauto

This program is available in all 50 states and the District of Columbia. Eligibility is limited by vehicle age, mileage, and other factors. General Motors reserves the right to change eligibility limitations and/or discontinue its participation in this program.

Downloaded from www.Manualslib.com manuals search engine

STEP THREE — Canadian Owners: In the event that you do not feel your concerns have been addressed after following the procedure outlined in Steps One and Two, General Motors of Canada Limited wants you to be aware of its participation in a no-charge Mediation/Arbitration Program. General Motors of Canada Limited has committed to binding arbitration of owner disputes involving factory-related vehicle service claims. The program provides for the review of the facts involved by an impartial third party arbiter, and may include an informal hearing before the arbiter. The program is designed so that the entire dispute settlement process, from the time you file your complaint to the final decision, should be completed in about 70 days. We believe our impartial program offers advantages over courts in most jurisdictions because it is informal, quick, and free of charge.

For further information concerning eligibility in the Canadian Motor Vehicle Arbitration Plan (CAMVAP), call toll-free 1-800-207-0685, or call the General Motors Customer Care Centre, 1-800-263-3777 (English), 1-800-263-7854 (French), or write to:

The Mediation/Arbitration Program
c/o Customer Care Centre
General Motors of Canada Limited
Mail Code: CA1-163-005
1908 Colonel Sam Drive
Oshawa, Ontario L1H 8P7

The inquiry should be accompanied by the Vehicle Identification Number (VIN).

Customer Assistance Offices

Chevrolet encourages customers to call the toll-free number for assistance. However, if a customer wishes to write or e-mail Chevrolet, the letter should be addressed to:

United States and Puerto Rico

Chevrolet Motor Division
Chevrolet Customer Assistance Center
P.O. Box 33170
Detroit, MI 48232-5170
www.Chevrolet.com

1-800-222-1020
1-800-833-2438 (For Text Telephone Devices (TTYs))
Roadside Assistance:
1-800-243-8872

From U.S. Virgin Islands:

1-800-496-9994

Downloaded from www.Manualslib.com manuals search engine

Canada

General Motors of Canada Limited
Customer Care Centre,
Mail Code: CA1-163-005
1908 Colonel Sam Drive
Oshawa, Ontario L1H 8P7
www.gm.ca

1-800-263-3777 (English)
1-800-263-7854 (French)
1-800-263-3830 (For Text Telephone devices (TTYs))
Roadside Assistance:
1-800-268-6800

Overseas

Please contact the local General Motors Business Unit.

Customer Assistance for Text Telephone (TTY) Users

To assist customers who are deaf, hard of hearing, or speech-impaired and who use Text Telephones (TTYs), Chevrolet has TTY equipment available at its Customer Assistance Center. Any TTY user in the U.S. can communicate with Chevrolet by dialing: 1-800-833-2438. TTY users in Canada can dial 1-800-263-3830.

Online Owner Center

Online Owner Experience (U.S.) my.chevrolet.com

The Chevrolet online owner experience is a one-stop resource that allows interaction with Chevrolet and keeps important vehicle-specific information in one place.

Membership Benefits

(Vehicle Information): Download owner manuals and view vehicle-specific how-to videos.

(Maintenance Information): View maintenance schedules, required alerts, OnStar onboard vehicle diagnostic information, and schedule service appointments.

(Service History): View printable dealer-recorded service records and self-recorded service records.

(Preferred Dealer Information): Select a preferred dealer and view dealer location, maps, phone numbers, and hours.

(Warranty Tracking Information): Track the vehicle's warranty information.

(Recall Information): View active recalls or search by Vehicle Identification Number (VIN). See *Vehicle Identification Number (VIN) on page 12-1*.

(Other Account Information): View GM Card, SiriusXM Satellite radio, and OnStar account information.

(Live Chat Support): Chat live with online help representatives.

Visit my.chevrolet.com to register your vehicle.

Downloaded from www.Manualslib.com manuals search engine

Chevrolet Owner Centre (Canada) chevroletowner.ca

Take a trip to the Chevrolet Owner Centre:

- Chat live with online help representatives.
- Use the Vehicle Tools section.
- Access third party enthusiast sites and social media networks.
- Locate owner resources such as lease-end, financing, and warranty information.
- Retrieve your favorite articles, quizzes, tips, and multimedia galleries organized into the Features and Auto Care Sections.
- Download the owner manual for your vehicle, quickly and easily.
- Find the Chevrolet-recommended maintenance services for your vehicle.

GM Mobility Reimbursement Program

This program is available to qualified applicants for cost reimbursement of eligible aftermarket adaptive equipment required for the vehicle, such as hand controls or a wheelchair/ scooter lift for the vehicle.

For more information on the limited offer, visit www.gmmobility.com or call the GM Mobility Assistance Center at 1-800-323-9935. Text Telephone (TTY) users, call 1-800-833-9935.

General Motors of Canada also has a Mobility Program. Call 1-800-GM-DRIVE (463-7483) for details. TTY users call 1-800-263-3830.

Roadside Assistance Program

For U.S.-purchased vehicles, call 1-800-243-8872; (Text Telephone (TTY): 1-888-889-2438).

For Canadian-purchased vehicles, call 1-800-268-6800.

Service is available 24 hours a day, 365 days a year.

Calling for Assistance

When calling Roadside Assistance, have the following information ready:

- Your name, home address, and home telephone number.
- Telephone number of your location.
- Location of the vehicle.

Downloaded from www.Manualslib.com manuals search engine

- Model, year, color, and license plate number of the vehicle.
- Odometer reading, Vehicle Identification Number (VIN), and delivery date of the vehicle.
- Description of the problem.

Coverage

Services are provided up to 5 years/ 160 000 km (100,000 mi), whichever comes first.

In the U.S., anyone driving the vehicle is covered. In Canada, a person driving the vehicle without permission from the owner is not covered.

Roadside Assistance is not a part of the New Vehicle Limited Warranty. Chevrolet and General Motors of Canada Limited reserve the right to make any changes or discontinue the Roadside Assistance program at any time without notification.

Chevrolet and General Motors of Canada Limited reserve the right to limit services or payment to an owner or driver if they decide the claims are made too often, or the same type of claim is made many times.

Services Provided

- **Emergency Fuel Delivery:** Delivery of enough fuel for the vehicle to get to the nearest service station.
- **Lock-Out Service:** Service to unlock the vehicle if you are locked out. A remote unlock may be available if you have OnStar. For security reasons, the driver must present identification before this service is given.
- **Emergency Tow from a Public Road or Highway:** Tow to the nearest Chevrolet dealer for warranty service, or if the vehicle was in a crash and cannot be driven. Assistance is also given when the vehicle is stuck in the sand, mud, or snow.
- **Flat Tire Change:** Service to change a flat tire with the spare tire. The spare tire, if equipped, must be in good condition and properly inflated. It is the owner's responsibility for the repair or replacement of the tire if it is not covered by the warranty.
- **Battery Jump Start:** Service to jump start a dead battery.

Services Not Included in Roadside Assistance

- Impound towing caused by violation of any laws.
- Legal fines.
- Mounting, dismounting, or changing of snow tires, chains, or other traction devices.
- Towing or services for vehicles driven on a non-public road or highway.

Downloaded from www.Manualslib.com manuals search engine

Services Specific to Canadian-Purchased Vehicles

- **Fuel Delivery:** Reimbursement is approximately $5 Canadian. Diesel fuel delivery may be restricted. Propane and other fuels are not provided through this service.
- **Lock-Out Service:** Vehicle registration is required.
- **Trip Interruption Benefits and Assistance:** Must be over 250 kilometers from where your trip was started to qualify. General Motors of Canada Limited requires pre-authorization, original detailed receipts, and a copy of the repair orders. Once authorization has been received, the Roadside Assistance advisor will help to make arrangements and explain how to receive payment.
- **Alternative Service:** If assistance cannot be provided right away, the Roadside Assistance advisor may give permission to get local emergency road service. You will receive payment, up to $100, after sending the original receipt to Roadside Assistance. Mechanical failures may be covered, however any cost for parts and labor for repairs not covered by the warranty are the owner responsibility.

Scheduling Service Appointments

When the vehicle requires warranty service, contact your dealer and request an appointment. By scheduling a service appointment and advising the service consultant of your transportation needs, your dealer can help minimize your inconvenience.

If the vehicle cannot be scheduled into the service department immediately, keep driving it until it can be scheduled for service, unless, of course, the problem is safety related. If it is, please call your dealership, let them know this, and ask for instructions.

If your dealer requests you to bring the vehicle for service, you are urged to do so as early in the work day as possible to allow for same-day repair.

Courtesy Transportation Program

To enhance your ownership experience, we and our participating dealers are proud to offer Courtesy Transportation, a customer support program for vehicles with the Bumper-to-Bumper (Base Warranty Coverage period in Canada), extended powertrain, and/or hybrid-specific warranties in both the U.S. and Canada.

Downloaded from www.Manualslib.com manuals search engine

Several Courtesy Transportation options are available to assist in reducing inconvenience when warranty repairs are required.

Courtesy Transportation is not a part of the New Vehicle Limited Warranty. A separate booklet entitled “Limited Warranty and Owner Assistance Information” furnished with each new vehicle provides detailed warranty coverage information.

Transportation Options

Warranty service can generally be completed while you wait. However, if you are unable to wait, GM helps to minimize inconvenience by providing several transportation options. Depending on the circumstances, your dealer can offer one of the following:

Shuttle Service

Shuttle service is the preferred means of offering Courtesy Transportation. Dealers may provide shuttle service to get you to your destination with minimal interruption of your daily schedule. This includes one-way or round-trip shuttle service within reasonable time and distance parameters of your dealer's area.

Public Transportation or Fuel Reimbursement

If the vehicle requires overnight warranty repairs, and public transportation is used instead of your dealer's shuttle service, the expense must be supported by original receipts and can only be up to the maximum amount allowed by GM for shuttle service. In addition, for U.S. customers, should you arrange transportation through a friend or relative, limited reimbursement for reasonable fuel expenses may be available. Claim amounts should reflect actual costs and be supported by original receipts. See your dealer for information regarding the allowance amounts for reimbursement of fuel or other transportation costs.

Courtesy Rental Vehicle

Your dealer may arrange to provide you with a courtesy rental vehicle or reimburse you for a rental vehicle that you obtain if the vehicle is kept for an overnight warranty repair. Rental reimbursement will be limited and must be supported by original receipts. This requires that you sign and complete a rental agreement and meet state/provincial, local, and rental vehicle provider requirements. Requirements vary and may include minimum age requirements, insurance coverage, credit card, etc. You are responsible for fuel usage charges and may also be responsible for taxes, levies, usage fees, excessive mileage, or rental usage beyond the completion of the repair.

It may not be possible to provide a like vehicle as a courtesy rental.

Downloaded from www.Manualslib.com manuals search engine

Additional Program Information

All program options, such as shuttle service, may not be available at every dealer. Please contact your dealer for specific information about availability. All Courtesy Transportation arrangements will be administered by appropriate dealer personnel.

General Motors reserves the right to unilaterally modify, change, or discontinue Courtesy Transportation at any time and to resolve all questions of claim eligibility pursuant to the terms and conditions described herein at its sole discretion.

Collision Damage Repair

If the vehicle is involved in a collision and it is damaged, have the damage repaired by a qualified technician using the proper equipment and quality replacement parts. Poorly performed collision repairs diminish the vehicle resale value, and safety performance can be compromised in subsequent collisions.

Collision Parts

Genuine GM Collision parts are new parts made with the same materials and construction methods as the parts with which the vehicle was originally built. Genuine GM Collision parts are the best choice to ensure that the vehicle's designed appearance, durability, and safety are preserved. The use of Genuine GM parts can help maintain the GM New Vehicle Limited Warranty.

Recycled original equipment parts may also be used for repair. These parts are typically removed from vehicles that were total losses in prior crashes. In most cases, the parts being recycled are from undamaged sections of the vehicle. A recycled original equipment GM part may be an acceptable choice to maintain the vehicle's originally designed appearance and safety performance; however, the history of these parts is not known. Such parts are not covered by the GM New Vehicle Limited Warranty, and any related failures are not covered by that warranty.

Aftermarket collision parts are also available. These are made by companies other than GM and may not have been tested for the vehicle. As a result, these parts may fit poorly, exhibit premature durability/corrosion problems, and may not perform properly in subsequent collisions. Aftermarket parts are not covered by the GM New Vehicle Limited Warranty, and any vehicle failure related to such parts is not covered by that warranty.

Downloaded from www.Manualslib.com manuals search engine

Repair Facility

GM also recommends that you choose a collision repair facility that meets your needs before you ever need collision repairs. Your dealer may have a collision repair center with GM-trained technicians and state-of-the-art equipment, or be able to recommend a collision repair center that has GM-trained technicians and comparable equipment.

Insuring the Vehicle

Protect your investment in the GM vehicle with comprehensive and collision insurance coverage. There are significant differences in the quality of coverage afforded by various insurance policy terms. Many insurance policies provide reduced protection to the GM vehicle by limiting compensation for damage repairs by using aftermarket collision parts. Some insurance companies will not specify aftermarket collision parts. When purchasing insurance, we recommend that you ensure that the vehicle will be repaired with GM original equipment collision parts. If such insurance coverage is not available from your current insurance carrier, consider switching to another insurance carrier.

If the vehicle is leased, the leasing company may require you to have insurance that ensures repairs with Genuine GM Original Equipment Manufacturer (OEM) parts or Genuine Manufacturer replacement parts. Read the lease carefully, as you may be charged at the end of the lease for poor quality repairs.

If a Crash Occurs

If there has been an injury, call emergency services for help. Do not leave the scene of a crash until all matters have been taken care of. Move the vehicle only if its position puts you in danger, or you are instructed to move it by a police officer.

Give only the necessary information to police and other parties involved in the crash.

For emergency towing see *Roadside Assistance Program on page 13-5*.

Gather the following information:

- Driver name, address, and telephone number.
- Driver license number.
- Owner name, address, and telephone number.
- Vehicle license plate number.
- Vehicle make, model, and model year.
- Vehicle Identification Number (VIN).
- Insurance company and policy number.
- General description of the damage to the other vehicle.

Downloaded from www.Manualslib.com manuals search engine

Choose a reputable repair facility that uses quality replacement parts. See “Collision Parts” earlier in this section.

If the airbag has inflated, see *What Will You See after an Airbag Inflates? on page 3-29*.

Managing the Vehicle Damage Repair Process

In the event that the vehicle requires damage repairs, GM recommends that you take an active role in its repair. If you have a pre-determined repair facility of choice, take the vehicle there, or have it towed there. Specify to the facility that any required replacement collision parts be original equipment parts, either new Genuine GM parts or recycled original GM parts. Remember, recycled parts will not be covered by the GM vehicle warranty.

Insurance pays the bill for the repair, but you must live with the repair. Depending on your policy limits, your insurance company may initially value the repair using aftermarket parts. Discuss this with the repair professional, and insist on Genuine GM parts. Remember, if the vehicle is leased, you may be obligated to have the vehicle repaired with Genuine GM parts, even if your insurance coverage does not pay the full cost.

If another party's insurance company is paying for the repairs, you are not obligated to accept a repair valuation based on that insurance company's collision policy repair limits, as you have no contractual limits with that company. In such cases, you can have control of the repair and parts choices as long as the cost stays within reasonable limits.

Service Publications Ordering Information

Service Manuals

Service Manuals have the diagnosis and repair information on the engines, transmission, axle, suspension, brakes, electrical, steering, body, etc.

Service Bulletins

Service Bulletins give additional technical service information needed to knowledgeably service General Motors cars and trucks. Each bulletin contains instructions to assist in the diagnosis and service of the vehicle.

Owner Information

Owner publications are written specifically for owners and intended to provide basic operational information about the vehicle. The Owner Manual includes the Maintenance Schedule for all models.

Downloaded from www.Manualslib.com manuals search engine

In-Portfolio: Includes a Portfolio, Owner Manual, and Warranty Booklet.

RETAIL SELL PRICE:
$35.00 (U.S.) plus handling and shipping fees.

Without Portfolio: Owner Manual only.

RETAIL SELL PRICE:
$25.00 (U.S.) plus handling and shipping fees.

Current and Past Models

Technical Service Bulletins and Manuals are available for current and past model GM vehicles.

ORDER TOLL FREE:
1-800-551-4123 Monday – Friday 8:00 AM – 6:00 PM Eastern Time

For Credit Card Orders Only (VISA-MasterCard-Discover), visit Helm, Inc. at: www.helminc.com.

Or write to:

Helm, Incorporated
Attention: Customer Service
47911 Halyard Drive
Plymouth, MI 48170

Prices are subject to change without notice and without incurring obligation. Allow ample time for delivery.

All listed prices are quoted in U.S. funds. Make checks payable in U.S. funds.

Reporting Safety Defects

Reporting Safety Defects to the United States Government

If you believe that your vehicle has a defect which could cause a crash or could cause injury or death, you should immediately inform the National Highway Traffic Safety Administration (NHTSA) in addition to notifying General Motors.

If NHTSA receives similar complaints, it may open an investigation, and if it finds that a safety defect exists in a group of vehicles, it may order a recall and remedy campaign.

Downloaded from www.Manualslib.com manuals search engine

However, NHTSA cannot become involved in individual problems between you, your dealer, or General Motors.

To contact NHTSA, you may call the Vehicle Safety Hotline toll-free at 1-888-327-4236 (TTY: 1-800-424-9153); go to *http://www.safercar.gov;* or write to:

Administrator, NHTSA
1200 New Jersey Avenue, S.E.
Washington, D.C. 20590

You can also obtain other information about motor vehicle safety from *http://www.safercar.gov*.

Reporting Safety Defects to the Canadian Government

If you live in Canada, and you believe that the vehicle has a safety defect, notify Transport Canada immediately, and notify General Motors of Canada Limited. Call Transport Canada at 1-800-333-0510 or write to:

Transport Canada
Road Safety Branch
80 rue Noel
Gatineau, QC J8Z 0A1

Reporting Safety Defects to General Motors

In addition to notifying NHTSA (or Transport Canada) in a situation like this, notify General Motors.

Call 1-800-222-1020, or write:

Chevrolet Motor Division
Chevrolet Customer Assistance Center
P.O. Box 33170
Detroit, MI 48232-5170

In Canada, call 1-800-263-3777 (English) or 1-800-263-7854 (French), or write:

General Motors of Canada Limited
Customer Care Centre, Mail Code: CA1-163-005
1908 Colonel Sam Drive
Oshawa, Ontario L1H 8P7

Downloaded from www.Manualslib.com manuals search engine

Vehicle Data Recording and Privacy

The vehicle has a number of computers that record information about the vehicle's performance and how it is driven. For example, the vehicle uses computer modules to monitor and control engine and transmission performance, to monitor the conditions for airbag deployment and deploy them in a crash, and, if equipped, to provide antilock braking to help the driver control the vehicle. These modules may store data to help the dealer technician service the vehicle. Some modules may also store data about how the vehicle is operated, such as rate of fuel consumption or average speed. These modules may retain personal preferences, such as radio presets, seat positions, and temperature settings.

Event Data Recorders

This vehicle is equipped with an event data recorder (EDR). The main purpose of an EDR is to record, in certain crash or near crash-like situations, such as an air bag deployment or hitting a road obstacle, data that will assist in understanding how a vehicle's systems performed. The EDR is designed to record data related to vehicle dynamics and safety systems for a short period of time, typically 30 seconds or less. The EDR in this vehicle is designed to record such data as:

- How various systems in your vehicle were operating;
- Whether or not the driver and passenger safety belts were buckled/fastened;
- How far (if at all) the driver was depressing the accelerator and/or brake pedal; and,
- How fast the vehicle was traveling.

These data can help provide a better understanding of the circumstances in which crashes and injuries occur. NOTE: EDR data are recorded by your vehicle only if a non-trivial crash situation occurs; no data are recorded by the EDR under normal driving conditions and no personal data (e.g., name, gender, age, and crash location) are recorded. However, other parties, such as law enforcement, could combine the EDR data with the type of personally identifying data routinely acquired during a crash investigation.

To read data recorded by an EDR, special equipment is required, and access to the vehicle or the EDR is needed. In addition to the vehicle manufacturer, other parties, such as law enforcement, that have the special equipment, can read the information if they have access to the vehicle or the EDR.

GM will not access this data or share it with others except: with the consent of the vehicle owner or,

Downloaded from www.Manualslib.com manuals search engine

if the vehicle is leased, with the consent of the lessee; in response to an official request by police or similar government office; as part of GM's defense of litigation through the discovery process; or, as required by law. Data that GM collects or receives may also be used for GM research needs or may be made available to others for research purposes, where a need is shown and the data is not tied to a specific vehicle or vehicle owner.

OnStar®

If the vehicle is equipped with OnStar® and has an active subscription, refer to the OnStar® Terms and Conditions for information on data collection and use. See *OnStar Overview on page 14-1*.

Radio Frequency Identification (RFID)

RFID technology is used in some vehicles for functions such as tire pressure monitoring and ignition system security, as well as in connection with conveniences such as Remote Keyless Entry (RKE) transmitters for remote door locking/unlocking and starting, and in-vehicle transmitters for garage door openers. RFID technology in GM vehicles does not use or record personal information or link with any other GM system containing personal information.

Radio Frequency Statement

This vehicle has systems that operate on a radio frequency that comply with Part 15 of the Federal Communications Commission (FCC) rules and with Industry Canada Standards RSS-GEN/210/220/310.

Operation is subject to the following two conditions:

1. The device may not cause harmful interference.
2. The device must accept any interference received, including interference that may cause undesired operation of the device.

Changes or modifications to any of these systems by other than an authorized service facility could void authorization to use this equipment.

Downloaded from www.Manualslib.com manuals search engine

✍ NOTES

Downloaded from www.Manualslib.com manuals search engine

OnStar

OnStar Overview
OnStar Overview 14-1

OnStar Services
Emergency 14-2
Security 14-2
Navigation 14-2
Connections 14-3
Diagnostics 14-5

OnStar Additional Information
OnStar Additional Information 14-5

OnStar Overview

If equipped, this vehicle has a comprehensive, in-vehicle system that can connect to a live Advisor for Emergency, Security, Navigation, Connection, and Diagnostic Services.

The OnStar system status light is next to the OnStar buttons. If the status light is:

- Solid Green: System is ready.
- Flashing Green: On a call.
- Red: Indicates a problem.

Push On or call 1-888-4ONSTAR (1-888-466-7827) to speak to an Advisor.

Push to:

- Make a call, end a call, or answer an incoming call.
- Give OnStar Hands-Free Calling voice commands.
- Give OnStar Turn-by-Turn Navigation voice commands. Requires the available Directions and Connections service plan.

Push On to connect to a live Advisor to:

- Verify account information or update contact information.
- Get driving directions. Requires the available Directions and Connections service plan.
- Receive On-Demand Diagnostics for a check of the vehicle's key operating systems.
- Receive Roadside Assistance.

Downloaded from www.Manualslib.com manuals search engine

Push the OnStar Emergency button SOS to get a priority connection to an Emergency Advisor available 24/7 to:

- Get help for an emergency.
- Be a Good Samaritan or respond to an AMBER Alert.
- Get crisis assistance and evacuation routes.

OnStar Services

Emergency

With Automatic Crash Response, the built-in system can automatically connect to help in most crashes, even if help cannot be requested.

Push SOS to connect to an Emergency Advisor. GPS technology is used to identify the vehicle location and can provide critical information to emergency personnel. The Advisor is also trained to offer critical assistance in emergency situations before first responders arrive.

Security

OnStar provides services like Stolen Vehicle Assistance, Remote Ignition Block, and Roadside Assistance, if the vehicle is equipped with these services. OnStar can unlock the vehicle doors remotely, if it is equipped with automatic door locks, and can help police locate the vehicle if it is stolen.

Navigation

OnStar navigation requires the Directions and Connections service plan.

Push On to receive directions or have them sent to the vehicle navigation screen, if equipped. Destinations can also be forwarded to the vehicle from Google Maps™ or MapQuest.com. The OnStar mapping database is continuously updated. Visit www.onstar.com for coverage maps.

Turn-by-Turn Navigation

1. Push On to connect to a live Advisor.
2. Request directions.
3. Directions are downloaded to the vehicle.
4. Follow the voice-guided commands.

Downloaded from www.Manualslib.com manuals search engine

Using Voice Commands During a Planned Route

Cancel Route

1. Push . System responds: “OnStar ready,” then a tone. Say “Cancel route.” System responds: “Do you want to cancel directions?”
2. Say “Yes.” System responds: “OK, request completed, thank you, goodbye.”

Route Preview

1. Push . System responds: “OnStar ready,” then a tone.
2. Say “Route preview.” System responds with the next three maneuvers.
3. Say “Goodbye.” Exits voice commands.

Repeat

1. Push . System responds: “OnStar ready,” then a tone.
2. Say “Repeat.” System responds with the last direction given, then responds with “OnStar ready,” then a tone.
3. Say “Goodbye.” Exits voice commands.

Get My Destination

1. Push . System responds: “OnStar ready,” then a tone.
2. Say “Get my destination.” System responds with address and the distance to the destination, then responds with “OnStar ready,” then a tone.
3. Say “Goodbye.” Exits voice commands.

Other Navigation Services Available from OnStar

OnStar eNav: Allows subscribers to send destinations from Google Maps and MapQuest.com to their Turn-by-Turn Navigation or screen-based navigation system. When ready, the directions will be downloaded to the vehicle.

Destination Download: Push , then request the Advisor to download directions to the navigation system in the vehicle. After the call ends, push the “Go” button on the navigation screen to begin driving directions.

Destinations can also be downloaded on the go. For information about eNav, Destination Download, and coverage maps visit www.onstar.com.

Connections

OnStar Hands-Free Calling allows calls to be made and received from the vehicle. The vehicle can also be controlled from a cell phone through the OnStar RemoteLink mobile app. See www.onstar.com for coverage maps.

Hands-Free Calling

1. Push . System responds: “OnStar ready.”

Downloaded from www.Manualslib.com manuals search engine

2. Say “Call.” System responds: “Please say the name or number to call.”
3. Say the entire number without pausing, including a “1” and the area code. System responds: “OK calling.”

Calling 911 Emergency

1. Press . The system responds “OnStar Ready,” followed by a tone.
2. Say “Call.” The system responds “Please say the name or number to call.”
3. Say “911” without pausing. The system responds “911.”
4. Say “Call.” The system responds “OK, dialing 911.”

Retrieve My Number

1. Push . System responds: “OnStar ready.”
2. Say “My number.” System responds: “Your OnStar Hands-Free Calling number is.”

End a Call

Push . System responds: “Call ended.”

Store a Name Tag for Speed Dialing

1. Push . System responds: “OnStar ready.”
2. Say “Store.” System responds: “Please say the number you would like to store.”
3. Say the entire number without pausing. System responds: “Please say the name tag.”
4. Pick a name tag. System responds: “About to store <name tag>. Does that sound OK?”
5. Say “Yes” or “No” to try again. System responds: “OK, storing <name tag>.”

Place a Call Using a Stored Number

1. Push . System responds: “OnStar ready.”
2. Say “Call <name tag>.” System responds: “OK, calling <name tag>.”

Verify Minutes and Expiration

Push and say “Minutes” then “Verify” to check how many minutes remain and their expiration date.

OnStar Mobile App

Download the OnStar RemoteLink mobile app to your iPhone, Android or BlackBerry smartphone to check vehicle fuel level, oil life, or tire pressure; to start the vehicle (if equipped) or unlock it; or to connect to an OnStar Advisor. For OnStar RemoteLink information and compatibility, see www.onstar.com.

Downloaded from www.Manualslib.com manuals search engine

Diagnostics

OnStar Vehicle Diagnostics will perform a vehicle check every month. It will check the engine, transmission, antilock brakes, and major vehicle systems. It also checks the tire pressures, if the vehicle is equipped with the Tire Pressure Monitoring System. If a diagnostics check is needed between e-mails, push ⓞ, and an Advisor can run a check.

OnStar Additional Information

Transferring Service

Push ⓞ to request account transfer eligibility information. The Advisor can assist in canceling or removing account information. If OnStar receives information that vehicle ownership has changed, OnStar may send a voice message to the vehicle, requesting updated account information.

Reactivation for Subsequent Owners

Push ⓞ and follow the prompts to speak to an Advisor as soon as possible after acquiring the vehicle. The Advisor will update vehicle records and will explain the OnStar service offers and options available.

How OnStar Service Works

Automatic Crash Response, Emergency Services, Crisis Assist, Stolen Vehicle Assistance, Vehicle Diagnostics, Remote Door Unlock, Roadside Assistance, Turn-by-Turn Navigation, and Hands-Free Calling are available on most vehicles. Not all OnStar services are available everywhere or on all vehicles. For more information, a full description of OnStar services, system limitations, and OnStar terms and conditions, see www.onstar.com (U.S.) or www.onstar.ca (Canada); contact OnStar at 1-888-4ONSTAR (1-888-466-7827) or TTY 1-877-248-2080; or push ⓞ to speak with an Advisor. OnStar services require a vehicle electrical system, wireless service, and GPS satellite technologies to be available and operating for features to function properly. These systems may not operate if the battery is discharged or disconnected.

Downloaded from www.Manualslib.com manuals search engine

OnStar service cannot work unless your vehicle is in a place where OnStar has an agreement with a wireless service provider for service in that area, and the wireless service provider has coverage, network capacity, reception, and technology compatible with OnStar service. Service involving location information about the vehicle cannot work unless GPS signals are available, unobstructed, and compatible with the OnStar hardware. OnStar service may not work if the OnStar equipment is not properly installed or it has not been properly maintained. If equipment or software is added, connected, or modified, OnStar service may not work. Other problems beyond the control of OnStar may prevent service such as hills, tall buildings, tunnels, weather, electrical system design and architecture of the vehicle, damage to the vehicle in a crash, or wireless phone network congestion or jamming.

See *Radio Frequency Statement on page 13-15* for information regarding Part 15 of the Federal Communications Commission (FCC) rules and Industry Canada Standards RSS-GEN/210/220/310.

Services for People with Disabilities

Advisors provide services to help subscribers with physical disabilities and medical conditions.

Push ⓪ for help with:

- Locating a gas station with an attendant to pump gas.
- Finding a hotel, restaurant, etc., that meets accessibility needs.
- Providing directions to the closest hospital or pharmacy in urgent situations.

TTY Users

OnStar has the ability to communicate to the deaf, hard-of-hearing, or speech-impaired customers while in the vehicle. The available dealer-installed TTY system can provide in-vehicle access to all of the OnStar services, except Virtual Advisor and OnStar Turn-by-Turn Navigation.

OnStar.com

The website provides access to account information, manages the OnStar subscription, and allows viewing of videos of each service. Get subscription plan pricing and sign up for OnStar Vehicle Diagnostics. Click on the “My Account” tab on the home page.

Downloaded from www.Manualslib.com manuals search engine

OnStar Personal Identification Number (PIN)

A PIN is needed to access some of the OnStar services, like Remote Door Unlock and Stolen Vehicle Assistance. You will be prompted to change the PIN the first time when speaking with an Advisor. To change the OnStar PIN, call OnStar and provide the Advisor with the current number.

Warranty

OnStar equipment may be warranted as part of the New Vehicle Limited Warranty. The manufacturer of the vehicle furnishes detailed warranty information.

Languages

The vehicle can be programmed to respond in French or Spanish.

Push Ⓞ and ask an Advisor. Advisors can speak French or Spanish.

Potential Issues

Some OnStar services are disabled after five days. OnStar cannot perform Remote Door Unlock or Stolen Vehicle Assistance after the vehicle has been off continuously for five days. After five days, OnStar can contact Roadside Assistance and a locksmith to help gain access to the vehicle.

Global Positioning System (GPS)

- Obstruction of the GPS can occur in a large city with tall buildings; in parking garages; around airports; in tunnels, underpasses, or parking garages; or in an area with very dense trees. If GPS signals are not available, the OnStar system should still operate to call OnStar. However, OnStar could have difficulty identifying the exact location.
- In emergency situations, OnStar can use the last stored GPS location to send to emergency responders.
- A temporary loss of GPS can cause loss of the ability to send a Turn-by-Turn Navigation route. The Advisor may give a verbal route or may ask for a call back after the vehicle is driven into an open area.

Cellular and GPS Antennas

Avoid placing items over or near the antenna to prevent blocking cellular and GPS signal reception. Cellular reception is required for OnStar to send remote signals to the vehicle.

Downloaded from www.Manualslib.com manuals search engine

Unable to Connect to OnStar Message

If there is limited cellular coverage or the cellular network has reached maximum capacity, this message may come on. Push ⓞⓝ to try the call again or try again after driving a few miles into another cellular area.

Vehicle and Power Issues

OnStar services require a vehicle electrical system, wireless service, and GPS satellite technologies to be available and operating for features to function properly. These systems may not operate if the battery is discharged or disconnected.

Add-on Electrical Equipment

The OnStar system is integrated into the electrical architecture of the vehicle. Do not add any electrical equipment. See *Add-On Electrical Equipment on page 9-47*. Added electrical equipment may interfere with the operation of the OnStar system and cause it to not operate.

Privacy

The complete OnStar Privacy Statement may be found at www.onstar.com. Privacy-sensitive users of wireless communications are cautioned that the privacy of any information sent via wireless cellular communications cannot be assured. Third parties may unlawfully intercept or access transmissions and private communications without consent.

OnStar - libcurl and unzip acknowledgments

Certain OnStar components include libcurl and unzip software. Below are the notices and licenses associated with this software:

libcurl:

COPYRIGHT AND PERMISSION NOTICE

Copyright (c) 1996 - 2010, Daniel Stenberg, <daniel@haxx.se>.

All rights reserved.

Permission to use, copy, modify, and distribute this software for any purpose with or without fee is hereby granted, provided that the above copyright notice and this permission notice appear in all copies.

THE SOFTWARE IS PROVIDED “AS IS,” WITHOUT WARRANTY OF ANY KIND, EXPRESS OR IMPLIED, INCLUDING BUT NOT LIMITED TO THE WARRANTIES OF MERCHANTABILITY, FITNESS FOR A PARTICULAR PURPOSE AND NONINFRINGEMENT OF THIRD PARTY RIGHTS. IN NO EVENT SHALL THE AUTHORS OR COPYRIGHT HOLDERS BE LIABLE FOR ANY CLAIM, DAMAGES OR OTHER LIABILITY, WHETHER IN AN ACTION OF CONTRACT, TORT OR OTHERWISE, ARISING FROM, OUT OF OR IN CONNECTION WITH THE SOFTWARE OR THE USE OR OTHER DEALINGS IN THE SOFTWARE.

Downloaded from www.Manualslib.com manuals search engine

Except as contained in this notice, the name of a copyright holder shall not be used in advertising or otherwise to promote the sale, use or other dealings in this Software without prior written authorization of the copyright holder.

unzip:

This is version 2005-Feb-10 of the Info-ZIP copyright and license. The definitive version of this document should be available at ftp://ftp.info-zip.org/pub/infozip/license.html indefinitely.

Copyright (c) 1990-2005 Info-ZIP. All rights reserved.

For the purposes of this copyright and license, “Info-ZIP” is defined as the following set of individuals:

Mark Adler, John Bush, Karl Davis, Harald Denker, Jean-Michel Dubois, Jean-loup Gailly, Hunter Goatley, Ed Gordon, Ian Gorman, Chris Herborth, Dirk Haase, Greg Hartwig, Robert Heath, Jonathan Hudson, Paul Kienitz, David Kirschbaum, Johnny Lee, Onno van der Linden, Igor Mandrichenko, Steve P. Miller, Sergio Monesi, Keith Owens, George Petrov, Greg Roelofs, Kai Uwe Rommel, Steve Salisbury, Dave Smith, Steven M. Schweda, Christian Spieler, Cosmin Truta, Antoine Verheijen, Paul von Behren, Rich Wales, Mike White

This software is provided “as is,” without warranty of any kind, express or implied. In no event shall Info-ZIP or its contributors be held liable for any direct, indirect, incidental, special or consequential damages arising out of the use of or inability to use this software.

Permission is granted to anyone to use this software for any purpose, including commercial applications, and to alter it and redistribute it freely, subject to the following restrictions:

1. Redistributions of source code must retain the above copyright notice, definition, disclaimer, and this list of conditions.
2. Redistributions in binary form (compiled executables) must reproduce the above copyright notice, definition, disclaimer, and this list of conditions in documentation and/or other materials provided with the distribution. The sole exception to this condition is redistribution of a standard UnZipSFX binary (including SFXWiz) as part of a self-extracting archive; that is permitted without inclusion of this license, as long as the normal SFX banner has not been removed from the binary or disabled.
3. Altered versions–including, but not limited to, ports to new operating systems, existing ports with new graphical interfaces, and dynamic, shared, or static library versions–must be plainly marked as such and must not be misrepresented as being the original source. Such altered versions also must not be misrepresented as being

Downloaded from www.Manualslib.com manuals search engine

Info-ZIP releases–including, but not limited to, labeling of the altered versions with the names “Info-ZIP” (or any variation thereof, including, but not limited to, different capitalizations), “Pocket UnZip,” “WiZ” or “MacZip” without the explicit permission of Info-ZIP. Such altered versions are further prohibited from misrepresentative use of the Zip-Bugs or Info-ZIP e-mail addresses or of the Info-ZIP URL(s).

4. Info-ZIP retains the right to use the names “Info-ZIP,” “Zip,” “UnZip,” “UnZipSFX,” “WiZ,” “Pocket UnZip,” “Pocket Zip,” and “MacZip” for its own source and binary releases.

Downloaded from www.Manualslib.com manuals search engine

A

Accessories and Modifications 10-3
Accessory Power 9-18
Add-On Electrical Equipment 9-47
Additional Information
OnStar® 14-5
Air Cleaner/Filter, Engine 10-11
Air Conditioning 8-3
Air Vents 8-6
Airbag System
Check 3-31
How Does an Airbag Restrain? 3-28
What Makes an Airbag Inflate? 3-28
What Will You See after an Airbag Inflates? 3-29
When Should an Airbag Inflate? 3-27
Where Are the Airbags? 3-26
Airbags
Adding Equipment to the Vehicle 3-30
Readiness Light 5-11
Servicing Airbag-Equipped Vehicles 3-30
System Check 3-24
Alarm
Vehicle Security 2-9
AM-FM Radio 7-7
Antenna
Multi-band 7-12
Satellite Radio 7-12
Antilock Brake
System (ABS) 9-26
Warning Light 5-15
Appearance Care
Exterior 10-78
Interior 10-82
Armrest
Front Seat 3-6
Ashtrays 5-7
Assistance Program, Roadside 13-5
Audio Players 7-13
CD 7-13
Audio System
Radio Reception 7-12
Theft-Deterrent Feature 7-2
Automatic
Climate Control System 8-3
Door Locks 2-7
Headlamp System 6-3
Transmission 9-21
Transmission Fluid 10-10
Automatic Transmission
Manual Mode 9-23
Shift Lock Control
Function Check 10-22
Auxiliary
Devices 7-15

B

Battery 10-21
Jump Starting 10-73
Power Protection 6-7
Voltage and Charging Messages 5-25
Blade Replacement, Wiper . . . 10-23
Bluetooth 7-18, 7-19, 7-23
Brake
System Warning Light 5-14

Downloaded from www.Manualslib.com manuals search engine

Brakes 10-19
Antilock 9-26
Assist 9-27
Fluid 10-20
Parking 9-27
System Messages 5-25
Braking 9-3
Break-In, New Vehicle 9-13
Bulb Replacement 10-30
Back-up Lamps 10-29
Fog Lamps 10-27
Halogen Bulbs 10-25
Headlamp Aiming 10-25
Headlamps 10-25
Headlamps, Front Turn Signal, Sidemarker, and Parking Lamps 10-25
License Plate Lamps 10-29
Taillamps, Turn Signal, Sidemarker, and Stoplamps 10-27
Buying New Tires 10-51

C

Calibration 5-5
California
Fuel Requirements 9-38
Perchlorate Materials Requirements 10-3
Warning 10-3
Camera, Rear Vision 9-35
Capacities and Specifications 12-2
Carbon Monoxide
Engine Exhaust 9-20
Liftgate 2-8
Winter Driving 9-7
Cargo
Cover 4-2
Management System 4-4
Cautions, Danger, and Warnings iv
CD Player 7-13
Center Console Storage 4-2
Chains, Tire 10-56
Charging System Light 5-11
Check
Engine Light 5-12
Ignition
Transmission Lock 10-23
Child Restraints
Infants and Young Children 3-34
Lower Anchors and Tethers for Children 3-39
Older Children 3-32
Securing 3-44, 3-46
Systems 3-36
Child-View Mirror 2-13
Cigarette Lighter 5-6
Circuit Breakers 10-31
Cleaning
Exterior Care 10-78
Interior Care 10-82
Climate Control Systems 8-1
Air Conditioning 8-1
Automatic 8-3
Heating 8-1
Clock 5-5
Cluster, Instrument 5-8
Clutch, Hydraulic 10-11
Collision Damage Repair 13-9

Downloaded from www.Manualslib.com manuals search engine

Compass 5-5
Messages 5-25
Compressor Kit, Tire
Sealant.....10-58
Connections
OnStar® 14-3
Control of a Vehicle 9-3
Convenience Net 4-4
Convex Mirrors 2-11
Coolant
Engine..... 10-13
Engine Temperature
Gauge 5-10
Cooling System.....10-13
Engine Messages 5-26
Courtesy Lamps 6-6
Courtesy Transportation
Program..... 13-7
Cover
Cargo.....4-2
Cruise Control 9-31
Light 5-20
Messages 5-25
Customer Assistance 13-4
Offices 13-3
Text Telephone (TTY)
Users 13-4
Customer Information
Service Publications
Ordering Information 13-11
Customer Satisfaction
Procedure 13-1

D

Damage Repair, Collision 13-9
Danger, Warnings, and
Cautions iv
Data Recorders, Event 13-14
Daytime Running
Lamps (DRL)..... 6-2
Indicator Light 5-20
Defensive Driving 9-2
Devices
Auxiliary 7-15
Diagnostics
OnStar® 14-5
Distracted Driving..... 9-2
Dome Lamps 6-6
Door
Ajar Light 5-21
Ajar Messages 5-25
Locks 2-6
Power Locks.....2-7
Drive Belt Routing, Engine 12-3
Driver Information
Center (DIC) 5-21
Driving
Characteristics and
Towing Tips 9-42
Defensive.....9-2
Drunk 9-3
For Better Fuel Economy 1-20
Highway Hypnosis 9-6
Hill and Mountain Roads.....9-6
If the Vehicle is Stuck 9-8
Loss of Control 9-4
Off-Road Recovery 9-4
Vehicle Load Limits 9-9
Wet Roads 9-5
Winter 9-7

Downloaded from www.Manualslib.com manuals search engine

E

Electrical Equipment,
Add-On 9-47
Electrical System
Engine Compartment
Fuse Block 10-31
Fuses and Circuit
Breakers 10-31
Instrument Panel Fuse
Block 10-34
Overload 10-30
Emergency
OnStar® 14-2
Engine
Air Cleaner/Filter 10-11
Check and Service Engine
Soon Light 5-12
Compartment Overview 10-6
Coolant 10-13
Coolant Temperature
Gauge 5-10
Cooling System 10-13
Cooling System Messages . . .5-26
Drive Belt Routing 12-3
Exhaust 9-20
Heater 9-17
Engine (cont'd)
Oil Life System 10-9
Oil Messages 5-26
Overheating 10-17
Power Messages 5-27
Pressure Light 5-18
Reduced Power Light 5-19
Running While Parked 9-21
Starting 9-16
Entry Lighting 6-7
Equipment, Towing 9-46
Event Data Recorders 13-14
Exit Lighting 6-7
Extender, Safety Belt 3-22
Exterior Lamp Controls 6-1

F

Filter,
Engine Air Cleaner 10-11
Flash-to-Pass 6-2
Flashers, Hazard Warning 6-4
Flat Tire 10-56
Changing 10-65
Floor Mats 10-85
Fluid
Automatic Transmission 10-10
Brakes 10-20
Washer 10-18
Fog Lamps
Bulb Replacement 10-27
Front 6-5
Folding Mirrors 2-12
Folding Seatback 3-7
Front Fog Lamp
Light 5-20
Front Seat Armrest 3-6
Front Seats
Adjustment 3-3
Heated 3-6
Front Storage 4-1
Fuel 9-38
Additives 9-39
Economy Driving 1-20
Filling a Portable Fuel
Container 9-41
Filling the Tank 9-40
Foreign Countries 9-39
Gasoline Specifications 9-38
Gauge 5-9
Low Fuel Warning Light 5-18

Downloaded from www.Manualslib.com manuals search engine

Fuel (cont'd)
Recommended 9-38
Requirements, California 9-38
System Messages 5-27
Full-Size Spare Tire 10-72
Fuses
Engine Compartment
Fuse Block 10-31
Fuses and Circuit
Breakers 10-31
Instrument Panel Fuse
Block 10-34

G

Gasoline
Specifications.....9-38
Gauges
Engine Coolant
Temperature 5-10
Fuel 5-9
Odometer.....5-9
Speedometer 5-9
Tachometer 5-9
Warning Lights and
Indicators 5-7
General Information
Service and Maintenance 11-1
Towing 9-42
Vehicle Care 10-2
Glove Box 4-1
GM Mobility Reimbursement
Program 13-5

H

Halogen Bulbs 10-25
Hazard Warning Flashers 6-4
Head Restraints 3-2
Headlamps
Aiming 10-25
Automatic.....6-3
Bulb Replacement 10-25
Daytime Running
Lamps (DRL).....6-2
Daytime Running Lamps
(DRL) Indicator Light 5-20
Flash-to-Pass.....6-2
Headlamps, Front Turn
Signal, Sidemarker, and
Parking Lamps 10-25
Headlamps (cont'd)
High-Beam On Light 5-19
High/Low Beam Changer 6-2
Lamps On Reminder 5-20
Heated Front Seats 3-6
Heated Mirrors 2-12
Heater
Engine 9-17
Heating and Air
Conditioning.....8-1, 8-3
High-Beam On Light 5-19
Highway Hypnosis 9-6
Hill and Mountain Roads 9-6
Hood 10-4
Horn 5-3
How to Wear Safety Belts
Properly 3-16
Hydraulic Clutch 10-11

I

Ignition Positions 9-14
Ignition Transmission Lock
Check 10-23
Immobilizer 2-10
Infants and Young Children,
Restraints 3-34

Downloaded from www.Manualslib.com manuals search engine

Infotainment 7-1
Instrument Cluster 5-8
Instrument Panel
Storage Area 4-1
Introduction iii

J

Jump Starting 10-73

K

Key and Lock Messages 5-27
Keyless Entry
Remote (RKE) System 2-3
Keys 2-1

L

Labeling, Tire Sidewall 10-38
Lamps
Courtesy 6-6
Daytime Running (DRL) 6-2
Dome 6-6
Exterior Controls 6-1
Front Fog 6-5
License Plate 10-29
Malfunction Indicator 5-12
Lamps (cont'd)
Messages 5-27
On Reminder 5-20
Reading 6-6
Lap-Shoulder Belt 3-17
Lashing Eyes 4-4
LATCH System
Replacing Parts after a
Crash 3-44
LATCH, Lower Anchors and
Tethers for Children 3-39
Liftgate
Carbon Monoxide 2-8
Lighter, Cigarette 5-6
Lighting
Entry 6-7
Exit 6-7
Illumination Control 6-6
Lights
Airbag Readiness 5-11
Antilock Brake System
(ABS) Warning 5-15
Brake System Warning 5-14
Charging System 5-11
Cruise Control 5-20
Daytime Running
Lamps (DRL) 5-20
Lights (cont'd)
Door Ajar 5-21
Engine Oil Pressure 5-18
Flash-to-Pass 6-2
Front Fog Lamp 5-20
High-Beam On 5-19
High/Low Beam Changer 6-2
Low Fuel Warning 5-18
Reduced Engine Power 5-19
Safety Belt Reminders 5-10
Security 5-19
Service Vehicle Soon 5-14
StabiliTrak® OFF 5-17
Tire Pressure 5-17
Traction Control System
(TCS)/StabiliTrak® 5-17
Traction Off 5-16
Up-Shift 5-16
Warning, Power Steering 5-16
Locks
Automatic Door 2-7
Door 2-6
Power Door 2-7
Safety 2-7
Loss of Control 9-4
Low Fuel Warning Light 5-18

Downloaded from www.Manualslib.com manuals search engine

Lower Anchors and Tethers for Children (LATCH System) 3-39

M

Maintenance Records 11-14
Maintenance Schedule Recommended Fluids and Lubricants 11-12
Malfunction Indicator Lamp 5-12
Manual Mirrors 2-11
Manual Mode 9-23
Manual Transmission 9-24
Fluid 10-11
Messages
Airbag System 5-28
Battery Voltage and Charging 5-25
Brake System 5-25
Compass 5-25
Door Ajar 5-25
Engine Cooling System 5-26
Engine Oil 5-26
Engine Power 5-27
Fuel System 5-27
Messages (cont'd)
Key and Lock 5-27
Lamp 5-27
Object Detection System 5-28
Ride Control System 5-28
Security 5-28
Service Vehicle 5-28
Starting the Vehicle 5-29
Tire 5-29
Transmission 5-29
Vehicle 5-24
Vehicle Reminder 5-30
Mirror
Child-View 2-13
Mirrors
Automatic Dimming Rearview 2-13
Convex 2-11
Folding 2-12
Heated 2-12
Manual 2-11
Manual Rearview 2-12
Power 2-12
Monitor System, Tire Pressure 10-44
Multi-band Antenna 7-12

N

Navigation
OnStar® 14-2
Net, Convenience 4-4
New Vehicle Break-In 9-13

O

Object Detection System Messages 5-28
Odometer 5-9
Off-Road Recovery 9-4
Oil
Engine 10-7
Engine Oil Life System 10-9
Messages 5-26
Pressure Light 5-18
Older Children, Restraints 3-32
Online Owner Center 13-4
OnStar®
System, In Brief 1-21
OnStar® Additional Information 14-5
OnStar® Connections 14-3
OnStar® Diagnostics 14-5
OnStar® Emergency 14-2

Downloaded from www.Manualslib.com manuals search engine

OnStar® Navigation 14-2
OnStar® Overview 14-1
OnStar® Security 14-2
Operation, Infotainment
System 7-4
Ordering
Service Publications 13-11
Outlets
Power 5-6
Overheating, Engine 10-17
Overview, Infotainment
System 7-3

P

Park
Shifting Into 9-18
Shifting Out of 9-19
Parking 9-20
Assist, Ultrasonic 9-33
Brake 9-27
Brake and P (Park)
Mechanism Check 10-23
Over Things That Burn 9-20
Perchlorate Materials
Requirements, California 10-3
Personalization
Vehicle 5-30
Phone
Bluetooth 7-18, 7-19, 7-23
Power
Door Locks 2-7
Mirrors 2-12
Outlets 5-6
Protection, Battery 6-7
Reduced Engine Light 5-19
Retained Accessory (RAP) . . .9-18
Seat Adjustment 3-4
Windows 2-14
Power Steering Warning
Lights 5-16
Pregnancy, Using Safety
Belts 3-22
Privacy
Radio Frequency
Identification (RFID) 13-15
Program
Courtesy Transportation 13-7
Proposition 65 Warning,
California 10-3

R

Radio Frequency
Identification (RFID) 13-15
Statement 13-15
Radios
AM-FM Radio 7-7
Reception 7-12
Satellite 7-9
Reading Lamps 6-6
Rear Vision Camera (RVC) 9-35
Rear Window Washer/Wiper 5-4
Rearview Mirrors 2-12
Automatic Dimming 2-13
Reclining Seatbacks 3-4
Recommended
Fuel 9-38
Recommended Fluids and
Lubricants 11-12
Records
Maintenance 11-14
Recreational Vehicle
Towing 10-76
Reduced Engine Power
Light 5-19
Reimbursement Program,
GM Mobility 13-5

Downloaded from www.Manualslib.com manuals search engine

Remote Keyless Entry
(RKE) System 2-2, 2-3
Remote Vehicle Start 2-5
Replacement Bulbs 10-30
Replacement Parts
Airbags 3-31
Maintenance 11-13
Replacing Airbag System 3-31
Replacing LATCH System
Parts after a Crash 3-44
Replacing Safety Belt
System Parts after a Crash . . . 3-23
Reporting Safety Defects
Canadian Government 13-13
General Motors 13-13
U.S. Government 13-12
Restraints
Where to Put 3-38
Retained Accessory
Power (RAP) 9-18
Ride Control Systems
Messages 5-28
Roads
Driving, Wet 9-5
Roadside Assistance
Program 13-5
Roof
Sunroof 2-16
Roof Rack System 4-5
Rotation, Tires 10-49
Routing, Engine Drive Belt 12-3
Running the Vehicle While
Parked 9-21

S

Safety Belts 3-15
Care 3-23
Extender 3-22
How to Wear Safety Belts
Properly 3-16
Lap-Shoulder Belt 3-17
Reminders 5-10
Replacing after a Crash 3-23
Use During Pregnancy 3-22
Safety Defects Reporting
Canadian Government 13-13
General Motors 13-13
U.S. Government 13-12
Safety Locks 2-7
Safety System Check 3-23
Satellite Radio 7-9
Scheduling Appointments 13-7
Sealant Kit, Tire 10-58
Seats
Adjustment, Front 3-3
Folding Seatback 3-7
Head Restraints 3-2
Heated Front 3-6
Power Adjustment, Front 3-4
Reclining Seatbacks 3-4
Second Row 3-8
Third Row Seat 3-12
Second Row Seats 3-8
Securing Child
Restraints 3-44, 3-46
Security
Light 5-19
Messages 5-28
OnStar® 14-2
Vehicle 2-9
Vehicle Alarm 2-9
Service
Accessories and
Modifications 10-3
Doing Your Own Work 10-4
Engine Soon Light 5-12
Maintenance Records 11-14

Downloaded from www.Manualslib.com manuals search engine

Service (cont'd)
Maintenance, General Information 11-1
Parts Identification Label 12-1
Publications Ordering Information 13-11
Scheduling Appointments 13-7
Vehicle Messages 5-28
Vehicle Soon Light 5-14
Servicing the Airbag 3-30
Shift Lock Control Function Check, Automatic Transmission 10-22
Shifting
Into Park 9-18
Out of Park 9-19
Sidemarker and Stoplamps Bulb Replacement 10-27
Signals, Turn and Lane-Change 6-4
Specifications and Capacities 12-2
Speedometer 5-9
StabiliTrak
OFF Light 5-17
System 9-29
Start Vehicle, Remote 2-5
Starter Switch Check 10-22
Starting the Engine 9-16
Starting the Vehicle Messsages 5-29
Steering 9-3
Power, Warning Lights 5-16
Wheel Adjustment 5-2
Wheel Controls 5-3
Storage Areas
Cargo Cover 4-2
Cargo Management System . . . 4-4
Center Console 4-2
Convenience Net 4-4
Front 4-1
Glove Box 4-1
Instrument Panel 4-1
Roof Rack System 4-5
Storing the Tire Sealant and Compressor Kit 10-65
Stuck Vehicle 9-8
Sun Visors 2-16
Sunroof 2-16
Symbols iv
System
Infotainment 7-1
Roof Rack 4-5

T

Tachometer 5-9
Taillamps
Bulb Replacement 10-27
Text Telephone (TTY) Users . . . 13-4
Theft-Deterrent Systems 2-10
Immobilizer 2-10
Third-Row Seats 3-12
Time 5-5
Tires
Buying New Tires 10-51
Chains 10-56
Changing 10-65
Designations 10-40
Different Size 10-53
Full-Size Spare 10-72
If a Tire Goes Flat 10-56
Inflation Monitor System 10-45
Inspection 10-48
Messages 5-29
Pressure Light 5-17
Pressure Monitor System . . . 10-44
Rotation 10-49
Sealant and Compressor Kit 10-58

Downloaded from www.Manualslib.com manuals search engine

Tires (cont'd)
Sealant and Compressor Kit, Storing 10-65
Sidewall Labeling 10-38
Terminology and Definitions 10-40
Uniform Tire Quality Grading 10-53
Wheel Alignment and Tire Balance 10-55
Wheel Replacement 10-55
When It Is Time for New Tires 10-50
Winter 10-38
Towing
Driving Characteristics 9-42
Equipment 9-46
General Information 9-42
Recreational Vehicle 10-76
Trailer 9-45
Vehicle 10-75
Traction
Control System (TCS) 9-28
Control System (TCS)/ StabiliTrak® Light 5-17
Off Light 5-16
Trailer
Towing 9-45
Transmission
Automatic 9-21
Fluid, Automatic 10-10
Fluid, Manual 10-11
Messages 5-29
Transportation Program, Courtesy 13-7
Turn and Lane-Change Signals 6-4
Turn Signal, Bulb Replacement 10-27

U

Ultrasonic Parking Assist 9-33
Uniform Tire Quality Grading 10-53
Up-Shift Light 5-16
Using This Manual iv

V

Vehicle
Alarm System 2-9
Control 9-3
Identification Number (VIN) 12-1
Load Limits 9-9
Messages 5-24
Personalization 5-30
Reminder Messages 5-30
Remote Start 2-5
Security 2-9
Service Soon Light 5-14
Towing 10-75
Vehicle Care
Storing the Tire Sealant and Compressor Kit 10-65
Tire Pressure 10-43
Ventilation, Air 8-6
Visors 2-16

Downloaded from www.Manualslib.com manuals search engine

W

Warning
Brake System Light 5-14
Warning Lights, Gauges, and
Indicators 5-7
Warnings iv
Cautions and Danger iv
Hazard Flashers 6-4
Washer Fluid 10-18
Wheels
Alignment and Tire
Balance 10-55
Different Size 10-53
Replacement 10-55
When It Is Time for New
Tires 10-50
Where to Put the Restraint 3-38
Windows 2-14
Power 2-14
Windshield
Wiper/Washer 5-3
Winter
Driving 9-7
Winter Tires 10-38
Wiper Blade Replacement 10-23
Wipers
Rear Washer 5-4

Downloaded from www.Manualslib.com manuals search engine