OWNER HANDBOOK

MiTo

ALFA ROMEO

WHY CHOOSING GENUINE PARTS

We really know your car because we invented, designed and built it: we really know every single detail.
At **Alfa Romeo Service authorised workshops** you can find technicians directly trained by us, offering quality and professionalism for all service operations.
Alfa Romeo workshops are always close to you for the regular servicing operations, season checks and practical recommendations by our experts.
With Alfa Romeo Genuine Parts you keep the reliability, comfort and performance features of your new car unchanged in time: that's why you bought it for.
Always ask for Genuine Parts for the components used on our cars; we recommend them because they come from our steady commitment in research and development of highly innovative technologies.
For all these reasons: **rely on Genuine Parts, because they are the only ones designed by Alfa Romeo for your car.**

SAFETY:
BRAKING SYSTEM

ENVIRONMENT: PARTICULATE FILTERS,
CLIMATE CONTROL MAINTENANCE

COMFORT: SUSPENSION
AND WINDSCREEN WIPERS

PERFORMANCE: SPARK PLUGS,
INJECTORS AND BATTERIES

LINEACCESSORI
ROOF RACK BARS, WHEEL RIMS

CHOOSING GENUINE PARTS IS THE MOST NATURAL CHOICE

PERFORMANCE

GENUINE PARTS

COMFORT

GENUINE PARTS

SAFETY

GENUINE PARTS

AMBIENT

GENUINE PARTS

ACCESSORIES

GENUINE PARTS

VALUES

GENUINE PARTS

HOW TO RECOGNISE GENUINE PARTS

To recognise a **Genuine Part**, **check that the component bears our brands**, always clearly visible on Genuine Parts, from the braking system to windscreen wipers, from shock absorbers to pollen filter.
All **Genuine Parts** undergo **strict controls**, both during design and manufacturing stages, by specialists using **vanguard materials**, to **test the component reliability**.
This to guarantee **performance** and **safety** for you and your passengers on board, for a long time.
Always ask for and make sure a **Genuine Part** has been used.

Pollen filter

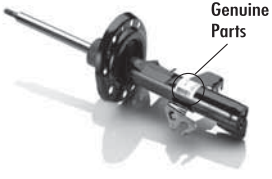

Shock absorber

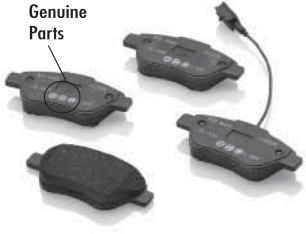

Brake pads

Dear Customer,

we would like to congratulate and thank you for choosing Alfa Romeo.

We have written this handbook to help you get to know all the features of your car and use it in the best possible way. Please read it all the way through before taking your car on the road for the first time.

Here you will find information, tips and important warnings regarding use of your car and how to achieve the best performance from the technological features of your Alfa Romeo. The handbook also provides a description of special features and tips as well as essential information for correct care, maintenance, safety of car driving and use and preservation of your Alfa Romeo over time.

Carefully read the warnings and indications marked with the following symbols:

personal safety;

car safety;

environmental protection.

The enclosed Warranty Booklet lists the services that Alfa Romeo offers to its Customers:

❒ the Warranty Certificate with terms and conditions for maintaining its validity;

❒ the range of additional services available to Alfa Romeo Customers.

We are confident that these instructions will help you become familiar with your new car and the Alfa Romeo after-sales staff who will be at your service.

Enjoy reading. Happy motoring!

This Owner Handbook describes all versions of the Alfa MiTo; please consider only the information relevant to your version, engine and configuration. All data contained in this publication are purely indicative. Fiat Group Automobiles can modify the specifications of the vehicle model described in this publication at any time, for technical or marketing purposes. For further information, contact an Alfa Romeo Dealership.

VERY IMPORTANT

REFUELLING

Petrol engines: only refuel with unleaded petrol with octane rating (RON) not less than 95 in compliance with the European Standard EN228.

Diesel engines: refuel only with diesel fuel conforming to the European specification EN590. The use of other products or mixtures may damage the engine beyond repair and consequently invalidate the warranty, due to the damage caused.

STARTING THE ENGINE

Petrol engines: make sure that the handbrake is engaged, set the gear lever to neutral, fully depress the clutch without depressing the accelerator, then turn the ignition key to AVV and release it as soon as the engine has started.

Diesel engines: turn the ignition key to MAR and wait for the warning lights and to go out; then turn the ignition key to AVV and release it as soon as the engine has started.

PARKING ON FLAMMABLE MATERIAL

The catalytic converter develops high temperatures during operation. Do not park the car on grass, dry leaves, pine needles or other flammable material: fire hazard.

RESPECTING THE ENVIRONMENT

The car is fitted with a system that carries out a continuous diagnosis of the emission-related components in order to help protect the environment.

ELECTRICAL ACCESSORIES

If after having purchased the car you decide to add accessories requiring electricity (with the risk of gradually draining the battery), contact Alfa Romeo Authorized Services. They can calculate the overall electric requirement and check that the car's electric system can support the required load.

CODE card

(for versions/markets, where provided)

Keep it in a safe place, not in the car. We recommend that you always carry the electronic code provided on the CODE card with you, in case you need to perform an emergency start.

SCHEDULED SERVICING

Correct maintenance of the car is essential for ensuring that it maintains its performance and its safety features, its environmental friendliness and low running costs for a long time to come.

THE OWNER MANUAL CONTAINS...

...important information, advice and warnings for correct use, driving safety and maintenance of your car over time. Particular attention should be paid to information marked with the following symbols: (personal safety) (environmental protection) (car integrity).

DASHBOARD

The presence and position of the controls, instruments and indicators may vary according to the different versions.

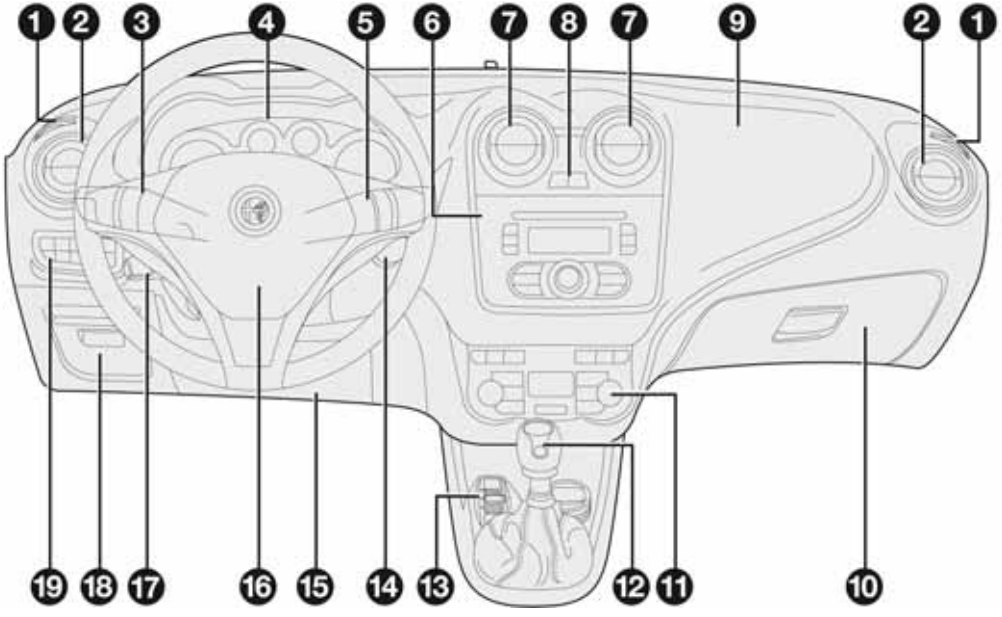

fig. 1 A0J0330

1. Diffuser for directing air to the side windows 2. Adjustable air vent 3. Exterior light control lever 4. Instrument panel 5. Windscreen wiper/rear window wiper/trip computer control lever 6. Car radio (for versions/markets, where provided) 7. Adjustable air diffusers 8. Hazard warning lights, door locking/unlocking button 9. Passenger front airbag 10. Glove compartment 11. Heating/ventilation/climate control system controls 12. Gear lever 13. "Alfa DNA" system 14. Ignition device 15. Driver side front knee bag (for versions/markets, where provided) 16. Driver front airbag 17. Cruise Control lever (for versions/markets, where provided) 18. Fuse box access flap 19. Panel with various controls.

GETTING TO KNOW YOUR CAR
SAFETY
STARTING AND DRIVING
IN AN EMERGENCY
SERVICING AND MAINTENANCE
TECHNICAL SPECIFICATIONS
INDEX

CONTROL PANEL AND INSTRUMENTS

VERSIONS WITH MULTIFUNCTION DISPLAY

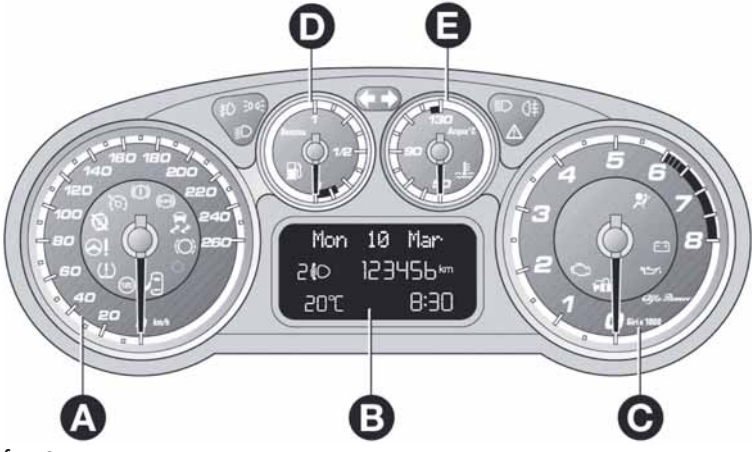

fig. 2 A0J1540

A. Speedometer (speed indicator) B. Multifunction display C. Rev counter D. Fuel level gauge with reserve warning light E. Engine coolant temperature gauge with overheating warning light

and Warning lights available on diesel versions only. On diesel versions, the end of scale for the rev counter is 6000 rpm

IMPORTANT The illumination of the instrument panel graphics may vary according to version.

VERSIONS WITH RECONFIGURABLE MULTIFUNCTIONAL DISPLAY

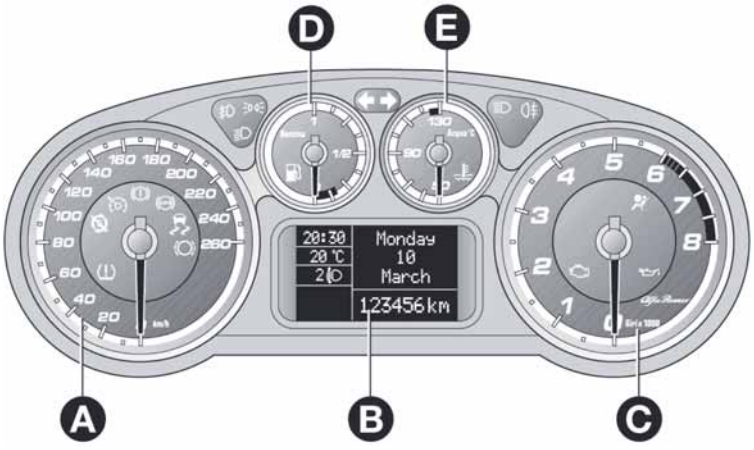

fig. 3 A0J1541

A. Speedometer (speed indicator) B. Reconfigurable multifunction display C. Rev counter D. Fuel level gauge with reserve warning light E. Engine coolant temperature gauge with overheating warning light

and Warning lights available on diesel versions only. On diesel versions, the end of scale for the rev counter is 6000 rpm

IMPORTANT The illumination of the instrument panel graphics may vary according to version.

SPEEDOMETER (SPEED INDICATOR)

This shows the speed of the car.

REV COUNTER

This indicates the engine rpm.

FUEL LEVEL GAUGE

This shows the amount of fuel left in the fuel tank.

The warning light in the gauge switches on when there are 5 to 7 litres of fuel remaining in the tank; if this happens, refuel as soon as possible.

Do not travel with the fuel tank almost empty: any gaps in fuel delivery could damage the catalytic converter.

ENGINE COOLANT TEMPERATURE GAUGE

The needle shows the temperature of the engine coolant and starts supplying indications when the fluid temperature exceeds approx. 50°C.

Under normal conditions, the needle assumes different positions within the scale depending on the usage conditions.

The warning light switches on to indicate an excessive increase of the coolant temperature; in this case, stop the engine and contact Alfa Romeo Authorized Services.

WARNING LIGHTS ON PANEL

General warnings

On some versions, the warning light switching-on is combined with specific messages on the display and/or acoustic warnings.

These indications are brief and precautionary and as such must not be considered as exhaustive and/or alternative to the information contained in this Owner's Handbook, which you are recommended to read carefully in all cases.

Always refer to the information in this paragraph in the event of a failure indication.

Low brake fluid level (red)

Turning the key to the MAR position illuminates the warning light, but it should switch off after a few seconds.

The warning light (or symbol on the display) comes on when the level of the brake fluid in the reservoir falls below the minimum level, possibly due to leaks in the circuit.

The display will show the dedicated message.

If the warning light turns on when driving stop the car immediately and contact Alfa Romeo Authorized Services.

Handbrake on (red)

Turning the key to the MAR position illuminates the warning light, but it should switch off after a few seconds.

The warning light (or symbol on the display) switches on when the handbrake is engaged. If the car is moving the buzzer will also sound.

IMPORTANT If the warning light turns on when driving, check that the handbrake is not engaged.

EBD failure

The simultaneous switching on of the (!) (red) and (ABS) (amber) warning lights with the engine on, indicates either a failure of the EBD system or that the system is not available. In this case, the rear wheels may suddenly lock and the vehicle may swerve when braking sharply.

The display will show the dedicated message.

Drive with extreme caution straight to the nearest Alfa Romeo Authorized Service to have the system checked.

ABS FAILURE (amber)

Turning the key to the MAR position illuminates the warning light, but it should switch off after a few seconds.

The warning light (or symbol on the display) lights up when the system is inefficient. Under these circumstances the braking system will work as normal without the extra performance offered by the ABS system.

Proceed with caution and contact Alfa Romeo Authorized Services as soon as possible.

The display will show the dedicated message.

Brake pad wear (amber)

(for versions/markets, where provided)

The warning light (or symbol on the display) switches on when the front and rear brake pads are worn. In this situation, replace as soon as possible.

The display will show the dedicated message.

Airbag failure (red)

Turning the key to the MAR position illuminates the warning light, but it should switch off after a few seconds.

If the warning light switches on constantly, this indicates a fault in the airbag system.

The display will show the dedicated message.

If, when turning the key to MAR-ON, the warning light does not turn on, or if it stays on constantly when driving (together with the message on the display), there could be a failure in the restraint systems. In this case airbags or pretensioners may not be deployed in the event of an impact or, in a lower number of cases, they deploy may accidentally. Before proceeding, contact Alfa Romeo Authorized Services to have the system checked immediately.

In the case of warning light failure , despite the flashing of the warning light in the trim located on the internal rear view mirror and the deactivating (where provided) of the passenger's airbag, on the versions with multifunction display on the instrument panel, the warning light will also flash and a dedicated message will be displayed. On the versions with reconfigurable multifunction display the symbol will instead be displayed, together with a message.

Low battery charge (red)

(for versions/markets, where provided)

When the ignition key is turned to MAR, the warning light switches on but should switch off as soon as the engine is started (with the engine idling, a brief delay is acceptable).

Contact Alfa Romeo Authorized Services if the warning light (or symbol on the display) remains on or flashes.

Electric power steering failure (red)

(for versions/markets, where provided)

Turning the key to the MAR position illuminates the warning light, but it should switch off after a few seconds.

If the warning light (or symbol on the display) stays on, you will not have steering assistance and the effort required to operate the steering wheel will be significantly increased; steering is, however, possible.

The display will show the dedicated message.

In this case, contact Alfa Romeo Authorized Services.

Start&Stop system deactivation (amber)

The warning light switches on when the Start&Stop system is deactivated by pressing the button on the auxiliary control panel next to the steering wheel.

A specific message is displayed on certain versions.

CONSTANTLY ON: Low engine oil pressure (red)

FLASHING: Engine oil deteriorated
(for versions/markets, where provided - red)

When the key is turned to MAR the warning light comes on, but should go out as soon as the engine is started.

1. Low engine oil pressure

The warning light turns on and stays on constantly (along with a message on the display on some versions) when the system detects that engine oil pressure is low.

If the warning light turns on when driving (on some versions, together with the message on the display), stop the car immediately and contact Alfa Romeo Authorized Services.

2. Engine oil deteriorated

(for versions/markets, where provided)

The warning light will turn on flashing and, on some versions, with a specific message on the display.

Depending on the versions, the warning light flashing modes are as follows:

❒ for 1 minute every two hours;

❒ cycles of 3 minutes with intervals with the warning light off for 5 seconds until the oil is changed.

After the first indication, at each engine start up the warning light will continue flashing as described above until the oil is changed. On some versions, the display shows a dedicated message together with the warning light.

If the warning light flashes, this does not mean that the car is defective, but simply informs the driver that it is now necessary to change the oil as a result of regular vehicle use.

Remember that the deterioration of the engine oil is accelerated by:

❒ mainly town use of the car which makes the DPF regeneration process more frequent;

❒ use of the car for short drives, in which the engine does not have time to reach its regular operating temperature;

❒ repeated interruption of the regeneration process, signalled by the DPF warning light coming on.

If the warning light switches on, the deteriorated engine oil must be changed as soon as possible, and never more than 500 km from the first time that the warning light switches on. Failure to observe the above indications may result in severe damage to the engine and invalidate the warranty. The activation of this warning light is not related to the amount of oil in the engine. Therefore, never top up with oil when the warning light starts flashing.

Engine coolant overheating (red)

Turning the key to the MAR position illuminates the warning light, but it should switch off after a few seconds.

The warning light turns on when the engine is overheated.

The display will show the dedicated message.

If the warning light comes on when driving, proceed as follows:

❒ **when driving normally**: stop the car, switch off the engine and check that the water level in the reservoir is not below the MIN mark. If it is, wait for the engine to cool down then slowly and carefully open the cap, top up with coolant and check that the level is between the MIN and MAX marks on the reservoir. Also check visually for leakages. If the warning light comes on again at the next engine start-up, contact Alfa Romeo Authorised Services.

❒ **if the vehicle is used under demanding conditions** (e.g. towing trailers uphill or fully loaded): slow down and, if the warning light stays on, stop the car. Wait for 2 or 3 minutes with the engine running and slightly accelerated to further favour the coolant circulation. Then stop the engine. Check the correct fluid level as described above.

IMPORTANT Over demanding routes, it is advisable to keep the engine on and slightly accelerated for a few minutes before switching it off.

Doors not closed correctly (red)

(for versions/markets, where provided)

The warning light (or symbol on the display) lights up when one or more doors or the tailgate are not closed correctly. An acoustic signal is activated with the doors open and the car moving.

On some versions the warning light (or symbol on the display) also lights up when the bonnet is not closed correctly.

EOBD/injection system failure (amber)

In normal conditions, when the ignition key is turned to MAR-ON the warning light switches on, but should switch off as soon as the engine is started.

If the warning light remains on or switches on whilst driving, the injection system is not working properly; in particular, if the warning light switches on constantly, this indicates a malfunction in the supply/ignition system that could cause excessive exhaust emissions, a possible loss of performance, poor driveability and high fuel consumption.

A specific message is displayed on certain versions.

Under these conditions, you may continue travelling at moderate speed without demanding excessive effort from the engine. Prolonged use of the car with the warning light on may cause damage.

Contact Alfa Romeo Authorized Services as soon as possible.

The warning light goes out after the fault disappears, but the notification is stored in the system.

NOTE (valid only for petrol engines)

If the warning light is flashing, this indicates that the catalytic converter may be damaged.

If the warning light comes on flashing, release the accelerator pedal to lower the speed of the engine until the warning light stops flashing. Continue the journey at moderate speed, trying to avoid driving conditions that may cause further flashing and contact Alfa Romeo Authorized Services as soon as possible.

Contact Alfa Romeo Authorized Services as soon as possible if the warning light does not light up or if, while travelling, the warning light comes on either constantly or flashing (in combination with a message on the display on some versions). The operation of warning light may be checked by the traffic police using specific devices. Follow the laws in force in the country where you are driving.

ESC system (amber)

(for versions/markets, where provided)

Turning the key to the MAR position illuminates the warning light, but it should switch off after a few seconds.

If the warning light (with message + symbol displayed on some versions) does not switch off, or if it remains lit up when driving, contact Alfa Romeo Authorized Services.

Flashing of the warning light while driving indicates the intervention of the ESC system.

ASR failure

Turning the key to the MAR position illuminates the warning light, but it should switch off after a few seconds.

If the warning light (or the symbol on the display) does not switch off, or if it remains lit when driving, contact Alfa Romeo Authorized Services.

A specific message is displayed on certain versions.

The warning light flashes while driving to indicate the intervention of the ASR system.

Hill Holder failure

This warning light comes on, on some versions together with the symbol and a message in the display, in the event of a fault with the Hill Holder system.

In this case, contact Alfa Romeo Authorized Services.

Alfa Romeo CODE system failure/Alarm failure (amber)

(for versions/markets, where provided)

The warning light (or symbol on the display) comes on (on some versions, with a message on the display) to indicate an Alfa Romeo CODE system or alarm failure (for versions/markets, where provided).

In this case, contact Alfa Romeo Authorized Services as soon as possible.

Break-in attempt

If this warning light flashes or, on some versions, if the symbol appears in the display (together with a message) this indicates a break-in attempt. Contact Alfa Romeo Authorized Services as soon as possible.

Glow plug preheating (diesel versions) (amber)

This warning light switches on when the key is turned to MAR. It will switch off as soon as the heater plugs have reached a preset temperature. The engine can be started as soon as the warning light switches off.

IMPORTANT In mild or high temperature conditions, the warning light comes on for an extremely short time.

Glow plug preheating failure (diesel versions)

The warning light will flash (a message will appear on the display, on some versions) to indicate a fault in the glow plugs preheating system.

Contact Alfa Romeo Authorized Services as soon as possible to eliminate the fault.

Water in diesel filter (diesel versions) (amber)

The warning light remains on constantly when driving (together with a message in the display), to indicate the presence of water in the diesel filter.

The presence of water in the fuel system circuit may cause severe damage to the injection system and irregular engine operation. If the warning light comes on in the instrument panel (together with a message in the display) contact Alfa Romeo Authorized Services as soon as possible to bleed the system. Water may have entered the tank if this appears immediately after refuelling: if this happens, switch the engine off immediately and contact Alfa Romeo Authorized Services.

Fuel reserve – Limited range (amber)

This warning light switches on when 5 to 7 litres of fuel are left in the tank.

When the remaining range is lower than approx. 50 km (or equivalent value in miles), on some versions, the display will show a warning message.

If the warning light flashes with the car in motion, contact Alfa Romeo Authorized Services.

Cruise control (green)

(for versions/markets, where provided)

The warning light comes on when the key is turned to MAR, but should go out after a few seconds if the Cruise Control function is off.

The warning light comes on when the Cruise Control ring nut is turned to the ON position (see the "Cruise Control" paragraph in this section).

The display will show the dedicated message.

DPF (diesel particulate filter) cleaning in progress (only diesel versions with DPF) (amber)

Turning the key to the MAR position illuminates the warning light, but it should switch off after a few seconds.

The warning light switches on constantly to indicate that the DPF system needs to eliminate the trapped pollutants (particulate) through the regeneration process.

The warning light does not come on during every DPF regeneration, but only when driving conditions require that the driver is notified. To switch the warning light off, the car must be kept moving until the regeneration process is completed.

On average, the process lasts fifteen minutes. Optimal conditions for completing the process are achieved by travelling at 60 km/h with engine revs above 2000 rpm.

When this warning light switches on, it does not indicate a car failure and thus it should not be taken to a workshop.

On some versions, together with the warning light, the display shows a dedicated message.

The driving speed must always be suitable for traffic and weather conditions and the driver must always comply with the Highway Code. The engine can be stopped even if the DPF warning light is on: however, repeated interruptions of the regeneration process could cause premature deterioration of the engine oil. For this reason, always wait until the warning light switches off before stopping the engine as described above. It is not advisable to complete DPF regeneration with the car stationary.

Speed limit exceeded (red)

(for versions/markets, where provided)

This warning light (for versions/markets, where provided) comes on when the vehicle speed exceeds 120 km/h.

When the car exceeds the speed limit set in the Set-up Menu (e.g. 120 km/h), on some versions a message and a symbol are shown in the display and an acoustic signal is activated.

General failure (amber)

(for versions/markets, where provided)

The warning light (or symbol on the display) switches on in the circumstances indicated below.

In these circumstances, contact Alfa Romeo Authorized Services as soon as possible to eliminate the fault.

Airbag failure warning light
(versions with multifunction display)

The warning light switches on and flashes (together with a message on the display) when a fault is detected with the airbag warning light .

Exterior lights failure

See description for the warning light.

Brake lights failure

See description for “Brake lights failure”.

Fuel cut-off

This warning light comes on when the fuel cut-off inertia switch is triggered. The display shows the dedicated message.

Start&Stop failure
(for versions/markets, where provided)

The warning light comes on when a failure is detected in the Start&Stop system.

Rain sensor failure
(for versions/markets, where provided)

See the description for the warning light.

Parking sensor failure
(for versions/markets, where provided)

See the description for the warning light.

Dusk sensor failure
(for versions/markets, where provided)

This warning light comes on when a dusk sensor failure is detected.

Engine oil pressure sensor failure

The warning light turns on when failure is detected in the engine oil pressure sensor. The display shows the dedicated message.

Electric power steering failure
(for versions/markets, where provided)

The warning light comes on when an electric power steering failure is detected.

Water in diesel filter
(for versions/markets, where provided)

The warning light switches on to indicate the presence of water in the diesel filter.

Speed limit exceeded
(for versions/markets, where provided)

The warning light switches on when the speed limit set in the Setup menu is exceeded.

When the car exceeds this value, on some versions a message and a symbol are shown on the display and an acoustic signal is emitted.

Rear fog light (amber)

The warning light switches on when the rear fog light is switched on.

Front fog lights (green)

The warning light switches on when the fog lights are switched on.

Side lights (green)

This warning light comes on when the side lights are turned on.

Follow me home (green)

The warning light switches on (together with a message shown on the display) when this device is in use (see "Follow me home device" paragraph in this section).

Dipped headlights (green)

The warning light switches on when the dipped headlights are switched on.

Main beam headlights (blue)

The warning light switches on when the main beam headlights are switched on.

Left direction indicator (green)

This warning light comes on when the direction indicator control lever is moved downwards and when the hazard warning light button is pressed.

Right direction indicator (green)

The warning light switches on when the direction indicator stalk is moved upwards or when the hazard warning light button is pressed.

Tyre pressure low

(for versions/markets, where provided)

This warning light (or symbol on the display) switches on (on some versions together with a message on the display) (together with an acoustic signal) if the pressure in one or more tyres drops below a preset threshold.

In this way the TPMS warns the driver that one or more tyres may be dangerously flat and liable to puncture.

IMPORTANT Do not continue driving with one or more flat tyres as handling may be compromised. Stop the car, avoiding sharp braking and steering. Replace the wheel immediately with the space-saver wheel (for versions/markets, where provided) or carry out an immediate repair using the dedicated kit (see "Changing a wheel" in the "In an emergency" section) and contact Alfa Romeo Authorised Services as soon as possible.

TPMS failure

This warning light (or symbol on the display) switches on (on some versions together with a message on the display) when a TPMS fault is detected.

In this case, contact Alfa Romeo Authorised Services as soon as possible.

Should one or more wheels be fitted without sensors, the display will show a warning message until initial conditions are restored.

Check tyre pressure

This warning light (or symbol in the display) switches on (on some versions together with a message in the display) to indicate that the tyre pressure is below the value recommended to guarantee long tyre life and low fuel consumption. It may also indicate a slow loss of pressure.

Should two or more tyres be in the condition mentioned above, the display will show the indications corresponding to each tyre in sequence.

Under these circumstances you should restore the correct pressure values (see "Technical specifications" section).

Start&Stop system activation/ deactivation

(for versions/markets, where provided)

Start&Stop system activation

A message will appear on the display when the Start&Stop system is activated.

Turning the Start&Stop off

❒ *Versions with multifunction display:* a message is displayed when the Start&Stop system is deactivated.

❒ *Versions with reconfigurable multifunction display:* the symbol is displayed + a message when the Start&Stop system is deactivated.

Start&Stop system failure

If the Start&Stop system is faulty the (versions with multifunction display) or (versions with reconfigurable multifunction display) symbol flashes on the display.

For versions/markets where provided, a warning message is also displayed.

In this case, contact Alfa Romeo Authorized Services.

Luggage compartment open

On some versions a message + symbol on the display are shown when the luggage compartment is open.

Bonnet open

On some versions a message + symbol on the display are shown when the bonnet is open.

Possible presence of ice on the road

On versions equipped with "Reconfigurable multifunction display", a message and a symbol will appear when the outdoor temperature falls to or below 3°C.

On versions with “Multifunction display” only the dedicated message is shown.

IMPORTANT In the event of outdoor temperature sensor failure, dashes are shown on the display instead of the value.

Fuel cut-off

On some versions the display will show a message + symbol if the fuel cut-off intervenes.

For the fuel cut-off system reactivation procedure see paragraph “Fuel cut-off system” in this section.

Exterior lights failure

On some versions, the display will show a message + symbol if a fault is detected in one of the following lights:

❒ daytime running lights (DRL)

❒ side lights

❒ direction indicators

❒ rear fog light

❒ number plate lights.

The failure relating to these lights could be: one or more blown bulbs, a blown protection fuse or a break in the electrical connection.

STOP Brake light failure

On some versions the display will show a message + symbol if a fault is detected in the brake lights.

The fault may be caused by a blown bulb, a blown protection fuse or an interruption of the electric connection.

AUTO ! Dusk sensor failure

(for versions/markets, where provided)

On some versions the display will show a message + symbol if there is a fault in the dusk sensor.

! Rain sensor failure

(for versions/markets, where provided)

On some versions the display will show a message + symbol if there is a fault in the rain sensor.

P Parking sensor failure

(for versions/markets, where provided)

On some versions the display will show a message + symbol if there is a fault in the parking sensors.

Dynamic Suspension failure (active shock absorber system)

(for versions/markets, where provided)

On some versions, a message + symbol are displayed in the event of active shock absorber system failure.

In this case, contact Alfa Romeo Authorised Services as soon as possible.

Display of selected driving mode ("Alfa DNA" system)

(for versions/markets, where provided)

On versions equipped with a "Reconfigurable multifunction display", a message + symbol associated with the selected driving mode "DYNAMIC", "NATURAL" or "ALL WEATHER" is shown. A warning message is shown on the display if one of these driving modes is not available.

On versions equipped with "Multifunction display", a letter ("d" or "a") associated with the selected driving mode is shown together with a dedicated message.

Engine oil level display

(for versions/markets, where provided)

When the ignition key is turned to MAR-ON the display shows, for a few seconds, the engine oil level. In case of insufficient engine oil level, a warning message appears on the display.

IMPORTANT To find out the correct engine oil quantity, always check using the dipstick (see paragraph "Checking levels" in the section "Maintenance and care").

IMPORTANT For a correct engine oil level indication, perform the check with the car parked on a level surface.

IMPORTANT To perform the engine oil reading correctly, after turning the key to MAR-ON, wait for about 2 seconds before starting the engine.

IMPORTANT The engine oil level may increase after a long stop.

WARNING LIGHTS ON TRIM LOCATED ON INTERNAL REAR VIEW MIRROR

Passenger airbag/side bags deactivated (amber)

The warning light on the trim located on the internal rear view mirror (see fig. 4) switches on when the front passenger's airbag and side bag are disabled.

With front passenger airbag on, when the ignition key is turned to MAR, the warning light switches on constantly for several seconds, flashes for another few seconds and then should switch off.

A failure of the warning light is indicated by the warning light switching-on on the instrument panel. In addition, the airbag system automatically disables the airbags on the passenger's side (front and side bags where provided). Before proceeding, contact Alfa Romeo Authorized Services to have the system checked immediately.

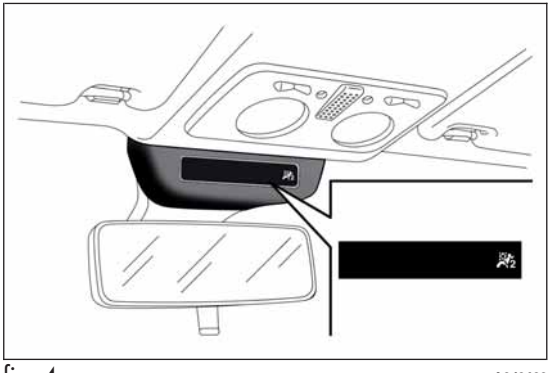

fig. 4 A0J0402

Seat belts not fastened (red) (green)

The warning lights switch on in the trim located on the internal rear view mirror (see fig. 5) to warn passengers in the front and rear seats that their seat belts are not fastened.

The warning lights can be red and green: see paragraph "S.B.R. system" in the "Safety" section for the switching-on modes of the warning lights.

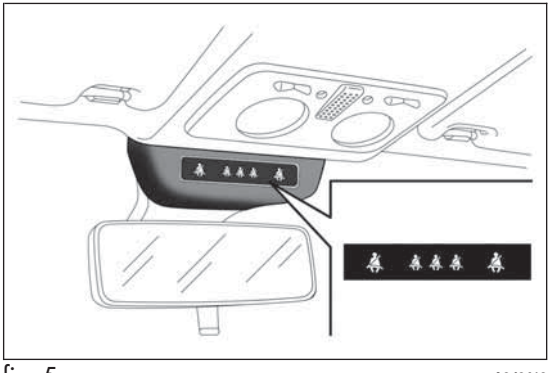

fig. 5 A0J0413

DISPLAY

The car may be provided with a multifunction or reconfigurable multifunction display that shows useful information to the driver, according to the previous settings, when driving.

With the ignition key removed, the display lights up and shows the time and total odometer reading (in km or miles) for a few seconds when a door is opened/closed.

MULTIFUNCTION DISPLAY "STANDARD" SCREEN

The following information appears on the display fig. 6:

A Date

B Milometer (distance covered in km or miles)

C Driving mode selected via "Alfa DNA" (dynamic car control system) (for versions/markets, where provided): d = Dynamic; n = Natural; a = All Weather

D Time (always displayed, even with key removed and doors closed)

E Start&Stop function indicator (for versions/markets where provided)

F Outside temperature

G Gear Shift Indicator (for versions/markets, where provided)

H Headlamp alignment position (only with dipped headlamps on)

RECONFIGURABLE MULTIFUNCTION DISPLAY "STANDARD" SCREEN

The following information appears on the display fig. 7:

A Time

B Trip mileage (in km or miles)

C Milometer (distance covered in km or miles)

D Car status indications (e.g. doors open, possible ice on road, etc.)/Start&Stop function indicator (for versions/markets, where provided)/Gear Shift Indicator (for versions/markets, where provided)

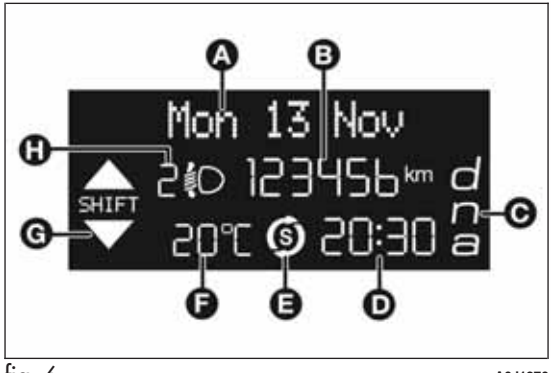

fig. 6 A0J1270

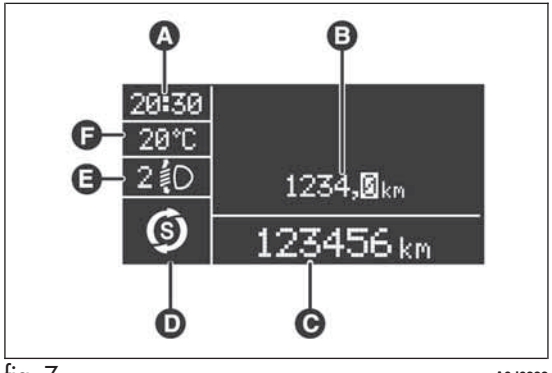

fig. 7 A0J0333

E Headlamp alignment position (only with dipped headlamps on)

F Outside temperature

On some versions, selecting "DYNAMIC" driving mode (see "Alfa DNA system" paragraph in this section) causes the display to show the turbine pressure fig. 8.

The instrument is calibrated for engines with higher supercharging pressures. Therefore, on some versions, it is normal for end of scale to be reached.

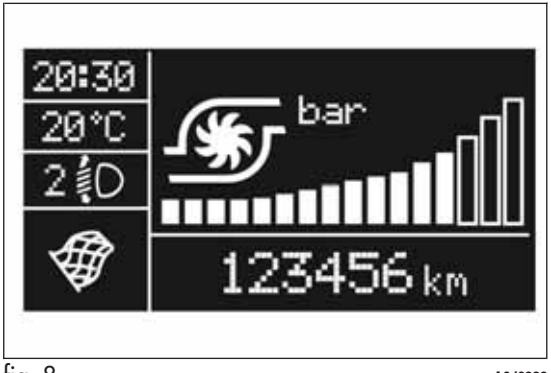

fig. 8 A0J0228

GEAR SHIFT INDICATOR

(for versions/markets, where provided)

The "GSI" (Gear Shift Indicator) system advises the driver to change gear through a special indication on the display fig. 9.

Through the GSI, the driver is notified that changing gear will allow a reduction in fuel consumption.

Therefore, for driving oriented towards reducing fuel consumption, it is recommended to stick to "Natural" or "All Weather" mode and to follow the suggestions of the Gear Shift Indicator, where the traffic conditions allow it.

When the SHIFT UP icon (▲ SHIFT) is shown on the display, the GSI is advising the driver to engage a higher gear, when the SHIFT DOWN (▼ SHIFT) icon is displayed, it advises the driver to engage a lower gear.

Note The indication in the instrument panel remains on until the driver shifts gear or the driving conditions go back to a situation where gearshifting is not required to improve consumption.

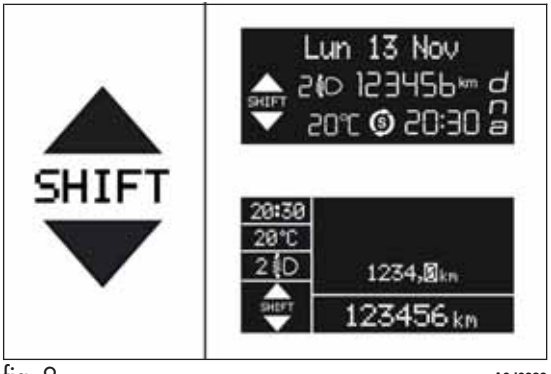

fig. 9 A0J0233

WELCOME MOVEMENT

On some versions, when the key is turned to MAR-ON, the following occurs:

❒ quick movement (up and down) of the speedometer and rpm gauge;

❒ lighting of graphic symbols/display;

❒ displaying of an animated graphic representation of the vehicle profile.

Gauge movement

❒ If the key is removed from the ignition switch whilst the gauges are moving, they immediately go back to their initial position.

❒ Once they have reached the full scale values, the gauges rest on the value indicated by the vehicle.

❒ The movement of the gauges stops when the engine is started.

Lighting of graphic symbols/display

A few seconds after the key is inserted, the gauges, graphic symbols and display light up in sequence.

Display of graphic animation

When the key is removed from the ignition switch (with the doors closed), the display remains lit up and shows a graphic animation.

The display lighting is then dimmed gradually until it goes out completely.

CONTROL BUTTONS

"+" or ▲ (versions with Start&Stop system): to scroll upwards through the screen and the related options or to increase the displayed value fig. 10.

SET/ : press briefly to access the menu and/or go to next screen or confirm the selection. Hold down to go back to the standard screen.

"–" or ▼ (versions with Start&Stop system): to scroll downwards through the screen and the related options or to decrease the displayed value.

IMPORTANT The "+" and "–" buttons (or ▲ and ▼ for versions with Start&Stop system) activate different functions according to the following situations:

❒ within the menu, they allow you to scroll up or down;

❒ during settings operations, they increase or decrease values.

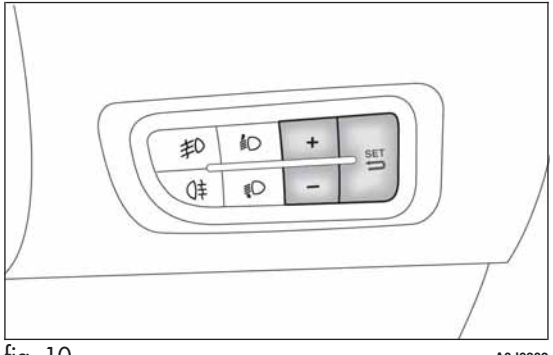

fig. 10 A0J0302

SETUP MENU

The menu comprises a series of options which can be selected using the "+" and "–" buttons (or ≡D ▲ and ≡D ▼ for versions with Start&Stop system) to access the different selection and setting operations (Setup) indicated below.

Some options have a submenu. The menu can be activated by briefly pressing the SET/⮌ button.

The menu comprises the following options:

❒ MENU
❒ SPEED BEEP
❒ LIGHT SENSOR (for versions/markets where provided)
❒ RAIN SENSOR (for versions/markets, where provided)
❒ TRIP B ACTIVATION/DATA
❒ SET TIME
❒ SET DATE
❒ FIRST PAGE (for versions/markets where provided)
❒ SEE RADIO
❒ AUTOCLOSE
❒ MEASUREMENT UNIT
❒ LANGUAGE
❒ BUZZER VOLUME
❒ BUTTON VOLUME
❒ SEAT BELT BEEP/BUZZ
❒ SERVICE
❒ AIRBAG/PASSENGER BAG
❒ DAYTIME RUNNING LIGHTS
❒ COURTESY LIGHTS
❒ MENU EXIT

Selecting an option from the main menu without a submenu:

❒ press the SET/⮌ button briefly to select the main menu setting you wish to change;
❒ press the "+" or "–" buttons (with single presses) to select the new setting;
❒ press the SET/⮌ button briefly to save the new setting and go back to the previous main menu option.

Selecting an option from the main menu with a submenu:

❒ briefly press the SET/⮌ button to display the first submenu option;
❒ press the "+" or "–" buttons (with single presses) to scroll through all the submenu options;
❒ briefly press the SET/⮌ button to select the displayed submenu option and to open the relevant settings menu;
❒ press the "+" or "–" buttons (with single presses) to select the new setting for this submenu option;
❒ press the SET/⮌ button briefly to save the new setting and go back to the previous submenu option.

MENU ITEMS

IMPORTANT With **Uconnect**™ 5" radio system (for versions/markets where provided), or **Uconnect**™ 5" Radio Nav system (for versions/markets, where provided), some Menu items are displayed and managed on the system display and not on the instrument panel display (refer to the dedicated supplements).

Menu

This item allows you to access the Setup Menu.

Press the "+" or "–" button to select the various Menu options. Hold down the SET/⮌ button to return to the standard screen.

Speed Beep (Speed limit)

With this function it is possible to set the car speed limit (km/h or mph); when this limit is exceeded the driver is alerted.

To set the desired speed limit, proceed as follows:

❒ briefly press the SET/⮌ button: the display will show the wording "Speed Beep";

❒ press the "–" or "+" button to select speed limit activation ("On") or deactivation ("Off");

❒ if the function is On, press the "+" or "–" button to select the required speed limit and then press the SET/⮌ button to confirm.

IMPORTANT Setting is possible between 30 and 200 km/h, or 20 and 125 mph, according to the previously set unit. See the "Unit of Measurement" paragraph described below. The setting will increase/decrease by five units each time button +/– is pressed. Hold down the +/– button for fast automatic increase/decrease. Complete the adjustment with single presses of the button when you approach the desired value.

Briefly press the SET/⮌ button to go back to the menu screen or hold the button down to go back to the standard screen without saving.

To cancel the setting, proceed as follows:

❒ briefly press the SET/⮌ button, "On" will flash in the display;

❒ press the – button, the display flashes ("Off");

❒ briefly press the SET/⮌ button to go back to the menu screen or hold the button down to go back to the standard screen without saving.

Headlight sensor (Automatic headlight/dusk sensor sensitivity adjustment)

(for versions/markets, where provided)

This function enables the headlights to come on or go off depending on external lighting conditions.

The dusk sensor sensitivity can be adjusted according to 3 levels (level 1=minimum sensitivity, level 2=average sensitivity, level 3=maximum sensitivity).

The higher the sensitivity set, the lesser is the external light variation needed to switch the lights on (e.g. with a setting on level 3 at sunset the headlights come on in advance in relation to levels 1 and 2).

Proceed as follows to set the desired adjustment:

❒ press the SET/⮌ button briefly to make the display flash the previously set level;

❒ press the "+" or "–" button to select;

❒ briefly press the SET/⮌ button to go back to the menu screen or hold the button down to go back to the standard screen without saving.

Rain sensor (Rain sensor sensitivity adjustment)

(for versions/markets, where provided)

This function allows you to adjust the rain sensor sensitivity to 4 levels.

To set the required sensitivity level proceed as follows:

- ❒ briefly press the SET/⮌ button, the previously set sensitivity level will flash on the display;
- ❒ press the "+" or "–" button to adjust;
- ❒ briefly press the SET/⮌ button to go back to the menu screen or hold the button down to go back to the standard screen without saving.

Activation/Trip B data (Trip B enablement)

This function may be used to activate (On) or deactivate (Off) the Trip B (partial trip). For further information see "Trip computer".

Proceed as follows to switch the function on and off:

- ❒ press the SET/⮌ button briefly to make the display flash "On" or "Off" according to what was previously set;
- ❒ press the "+" or "–" button to select;
- ❒ briefly press the SET/⮌ button to go back to the menu screen or hold the button down to go back to the standard screen without saving.

Time adjustment (Clock adjustment)

This function enables to set the clock through two submenus: "Time" and "Format".

To carry out the adjustment, proceed as follows:

- ❒ briefly press the SET/⮌ button and two submenus ("Time" and "Format") will be displayed;
- ❒ press the "+" or "–" button to move between the two submenus;
- ❒ once you have selected a sub-menu to be modified, press SET/⮌ briefly;
- ❒ when the "Time" submenu is entered, by briefly pressing SET/⮌ the hours flash on the display;
- ❒ press the "+" or "–" button to adjust;
- ❒ briefly press the SET/⮌ button, which makes the display flash the "minutes";
- ❒ press the "+" or "–" button to adjust.

IMPORTANT Each press on the "+" or "–" buttons causes an increase or decrease of one unit. Hold down the button to increase/decrease the setting rapidly and automatically. Complete the adjustment with single presses of the button when you approach the desired value.

- ❒ When you select "Format": briefly pressing the SET/⮌ button makes the display mode flash on the display;
- ❒ press "+" or "–" to select "24h" or "12h".

When you have made the required settings, briefly press the SET/⮌ button to go back to the submenu screen or hold the button down to go back to the main menu screen without saving the new settings.

Hold the SET/⮌ button down again to return to the standard screen or to the main menu according to where you are in the menu.

Set date (Setting the date)

Using this function it is possible to change the date (day – month – year).

Proceed as follows to start the update:

❒ briefly press the SET/⮌ button: the "year" starts flashing on the display;

❒ press the "+" or "–" button to adjust;

❒ briefly press the SET/⮌ button: the "month" will flash on the display;

❒ press the "+" or "–" button to adjust;

❒ briefly press the SET/⮌ button: the “day” will flash on the display;

❒ press the "+" or "–" button to adjust.

IMPORTANT Each press on the "+" or "–" buttons causes an increase or decrease of one unit. Hold the button down to increase/decrease the setting rapidly and automatically. Complete the adjustment with single presses of the button when you approach the desired value.

Briefly press the SET/⮌ button to go back to the menu screen or hold the button down to go back to the standard screen without saving.

First page (Display of information on the main screen)

(for versions/markets, where provided)

This function allows you to choose the information you would like to see on the main screen. You can view the date or the trip distance.

To make your choice, proceed as follows:

❒ briefly press the SET/⮌ button: "Initial page" will be displayed;

❒ press the SET/⮌ button again briefly to display the "date" and "engine info" options;

❒ press "+" or "–" to select the desired view on the main screen of the display;

❒ briefly press the SET/⮌ button to go back to the menu screen or hold the button down to go back to the standard screen without saving.

When the key is turned to MAR-ON and the initial check stage is over, the display will show the information selected via the "First page" menu function.

See radio (audio information display)

This function is used to display radio information.

❒ Radio: selected radio station frequency or RDS message, automatic tuning activation or AutoSTore;

❒ CD audio/CD MP3: track number.

To show the radio information on the display ("On") or clear it ("Off"), proceed as follows:

❒ briefly press the SET/⮌ button, the display will show "On" or "Off" flashing depending on the previous setting;

❒ press the "+" or "–" button to select;

❒ briefly press the SET/⮌ button to go back to the menu screen or hold the button down to go back to the standard screen without saving.

Autoclose (Automatic door lock operation with car running)

When activated (On), this function locks the doors automatically when the vehicle speed exceeds 20 km/h.

Proceed as follows to activate or deactivate this function:

❒ press the SET/⮌ button briefly to display a submenu;

❒ press the SET/⮌ button briefly to make the display flash "On" or "Off" according to what was previously set;

❒ press the "+" or "–" button to select;

❒ press the SET/⮌ button briefly to return to the submenu screen or hold the button down to return to the main menu screen without saving;

❒ hold the SET/⮌ button down again to return to the standard screen or to the main menu according to where you are in the menu.

Unit of measurement (Setting the unit of measurement)

With this function it is possible to set the measurement units through three sub-menus: “Distance”, “Consumption” and “Temperature”.

To set the desired measurement unit, proceed as follows:

❒ briefly press the SET/⮌ button to display the three sub-menus;

❒ press the "+" or "–" button to move between the three submenus;

❒ once the submenu to be modified has been selected, briefly press the SET/⮌ button;

❒ when the “Distance” submenu is entered: briefly pressing SET/⮌ displays "km" or "mi" depending on the previous setting;

❒ press the "+" or "–" button to select;

❒ when the “Consumption” submenu is entered, pressing SET/⮌ displays km/l, l/100 km or mpg depending on the previous setting;

If the set distance unit is "km", the fuel consumption unit will be displayed in km/l or l/100 km.

If the distance unit set is “mi” the fuel consumption unit will be displayed in “mpg”.

❒ press the "+" or "–" button to select;

❒ when the “Temperature” submenu is entered, pressing SET/⮌ displays “°C” or “°F” depending on the previous setting;

❒ press the "+" or "–" button to select;

When you have made the required settings, briefly press the SET/⮌ button to go back to the submenu screen or hold the button down to go back to the main menu screen without saving the new settings.

Hold the SET/⮌ button down again to return to the standard screen or to the main menu according to where you are in the menu.

Language (Language selection)

Display messages can be shown in different languages: Italian, English, German, Portuguese, Spanish, French, Dutch, Turkish and Brazilian.

To set the desired language proceed as follows:

❒ briefly press the SET/⮌ button: the previously set "language" starts flashing on the display;

❒ press the "+" or "–" button to select;

❒ briefly press the SET/⮌ button to go back to the menu screen or hold the button down to go back to the standard screen without saving.

Warnings volume (Adjusting the alert/warning acoustic signal volume)

With this function it is possible to adjust (to eight levels) the volume of the acoustic signal which sounds in the event of alerts and warning.

To set the desired volume proceed as follows:

❒ press the SET/⮌ button briefly, making the display flash the previously set volume "level";

❒ press the "+" or "–" button to adjust;

❒ briefly press the SET/⮌ button to go back to the menu screen or hold the button down to go back to the standard screen without saving.

Button volume (Button volume adjustment)

With this function it is possible to adjust (to eight levels) the volume of the acoustic signal when the SET/⮌ button is held down to exit a submenu and return to the standard menu.

To set the desired volume proceed as follows:

❒ briefly press the SET/⮌ button, the previously set volume "level" will be displayed;

❒ press the "+" or "–" button to adjust the volume; an acoustic signal equal to the volume level being selected is emitted during this adjustment;

❒ briefly press the SET/⮌ button to go back to the previous screen or hold the button down to go back to the standard screen without saving.

On versions with reconfigurable multifunction display, the volume level is represented by bars.

Belt reminder (Reactivation of SBR buzzer)

(for versions/markets, where provided)

This function will only be displayed after the SBR system has been deactivated by Alfa Romeo Authorised Services (see "SBR system" in the "Safety" chapter).

To reactivate this function, proceed as follows:

❒ briefly press the SET/⮌ button, the display shows "OFF" flashing. Press the "+" or "–" button and "On" will be displayed;

❒ briefly press the SET/⮌ button to go back to the previous screen or hold the button down to go back to the standard screen without saving.

Service (Scheduled servicing)

This function allows you to display the information about km/mileage intervals or, for versions/markets, where provided, time intervals for car servicing.

To consult this information, proceed as follows:

❒ briefly press the SET/⮌ button: the display shows when servicing is due in km/mi or days (where provided) or mi or days (where provided) according to the previous setting (see paragraph "Units of measurement");

❒ briefly press the SET/⮌ button to go back to the menu screen or hold the button down to go back to the standard screen.

IMPORTANT The “Scheduled Servicing Plan” includes car maintenance at fixed intervals (refer to the "Maintenance and care" chapter). This is displayed automatically, with ignition key at MAR-ON, 2000 km (or equivalent value in miles) before servicing or, where provided, 30 days before servicing. It is also displayed each time the key is turned to MAR-ON or, for versions/markets, where provided, every 200 km (or equivalent value in miles). Below this threshold servicing indications are more frequent. The display will be in km or miles according to the unit of measurement set. When the next scheduled service is approaching, the word “Service” will appear on the display, followed by the number of kilometres/miles or days (where provided) left, when the key is turned to MAR-ON. Contact Alfa Romeo Authorised Services where the "Scheduled Servicing Plan" operations will be performed and the message will be reset.

When the service interval is reached and for about 1000 km/600 mi or 30 days, a service due message is displayed.

Passenger airbag/side bag (front passenger side airbag and side bag for pelvis, chest and shoulder protection - Side bag - activation/deactivation)

This function is used to activate/deactivate the passenger side air bag.

Proceed as follows:

- ❒ press the SET/⮌ button and, after the message (Bag pass: Off) (to deactivate) or (Bag pass: On) (to activate) is displayed by pressing buttons "+" or "–", press the SET/⮌ button again;
- ❒ a confirmation request message will appear on the display;
- ❒ by pressing the "+" or "–" buttons select "Yes" (to confirm the activation/deactivation) or "No" (to quit);
- ❒ press the SET/⮌ button briefly, a message confirming the selection will be displayed and you will return to the menu screen or, pressing the button for longer, you will return to the standard screen without memorising.

Daytime running lights (DRL)

With this function is possible to turn the daytime running lights on and off.

Proceed as follows to activate or deactivate this function:

- ❒ press the SET/⮌ button briefly to display a submenu;
- ❒ press the SET/⮌ button briefly to make the display flash "On" or "Off" according to what was previously set;
- ❒ press the "+" or "–" button to select;
- ❒ press the SET/⮌ button briefly to return to the submenu screen or hold the button down to return to the main menu screen without saving;
- ❒ hold the SET/⮌ button down again to return to the standard screen or to the main menu according to where you are in the menu.

Courtesy lights (Activation/ deactivation of "Greeting lights")

(for versions/markets, where provided)

With this function it is possible to turn on the side lights, the number plate lights and the ceiling lights for approximately 25 seconds when the doors or boot are opened using the remote control, with the following exceptions:

❒ interruption after 5 seconds from when the door closes

❒ interruption after locking using the remote control

❒ interruption after a lock or other action using the remote control

Proceed as follows to activate or deactivate this function:

❒ press the SET/⮌ button briefly to make the display flash "On" or "Off" according to what was previously set;

❒ press the "+" or "–" button to select;

❒ briefly press the SET/⮌ button to go back to the menu screen or hold the button down to go back to the standard screen without saving.

Menu exit

This is the last function that closes the cycle of settings listed in the menu screen.

Pressing the SET/⮌ button briefly will return the display to the standard screen without saving.

Press the – button to return to the first menu option.

TRIP COMPUTER

GENERAL INFORMATION

The Trip computer is used to display information on car operation when the key is turned to MAR.

This function allows you to define two separate trips called "Trip A" and "Trip B" for monitoring the car's "complete journey" in a reciprocally independent manner.

Both functions are resettable (reset - start of a new journey).

"Trip A" is used to display the figures relating to:

❒ Range

❒ Distance travelled

❒ Average fuel consumption

❒ Instant fuel consumption

❒ Average speed

❒ Trip time (driving time).

"Trip B" may be used to display the figures relating to:

❒ Distance travelled B

❒ Average consumption B

❒ Average speed B

❒ Trip time B (driving time).

The "Trip B" function may be disabled (see "Activating Trip B"). "Range" and "Instant consumption" parameters cannot be reset.

VALUES DISPLAYED

Range

This indicates the indicative distance that may be travelled with the fuel in the tank, assuming that driving conditions do not change.

The display will show the reading '-----' when the following events take place:

❒ range value lower than 50 km (or 30 mi)

❒ car parked with engine running for a long period.

IMPORTANT The range can be affected by several factors: driving style (see "Driving style" in the "Starting and driving" section), type of route (motorway, towns and cities, mountain roads, etc.), conditions of use (load, tyre pressures, etc.). Trip planning must therefore take the above into account.

Distance covered

Shows the distance covered since the start of the new journey.

Average consumption

Shows the approximate average fuel consumption since the start of the new journey.

Instantaneous consumption

This indicates the fuel consumption. The value is constantly updated. The display will show "- - - -" if the car is parked with the engine running.

Average speed

This shows the average car speed as a function of the overall time elapsed since the start of the new journey.

Trip time

The time elapsed since the start of a new journey.

Indications on display

Each time a value is displayed, the following information is shown:

❒ animated icon in the upper part fig. 11;

❒ the word "Trip" (or "Trip A" or "Trip B") (B);

❒ the name, value and unit of measurement of the selected parameter (e.g. "Range 1500 km") (C).

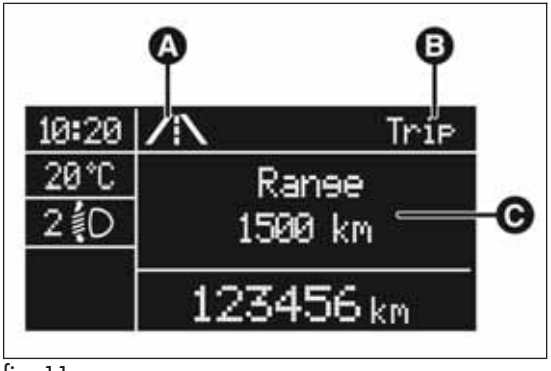

fig. 11 A0J1223

After a few seconds the name and value of the selected parameter are replaced by an icon fig. 12.

The icons relating to the various parameters are the following:

❒ "Range";

❒ "Average consumption A" (if Trip A is active, or "B" if Trip B is active);

❒ "Distance" (if Trip A is active, or "B" if Trip B is active);

❒ "Instantaneous consumption";

❒ "Average speed A" (if Trip A is active, or "B" if Trip B is active);

❒ "Trip time" (if Trip A is active, or "B" if Trip B is active);

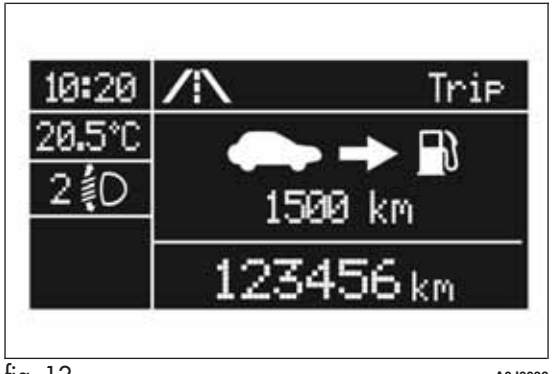

fig. 12 A0J0033

TRIP button 0.00

The TRIP 0.00 button is located on the right hand stalk fig. 13. With the ignition key turned to MAR-ON, this button allows you to view the previously described values and also set them to zero to begin a new mission:

❒ short press: display various values;

❒ long press: values reset and start of a new mission.

New mission

This begins after a reset:

❒ "manual" resetting by the user, by pressing the relevant button;

❒ "automatic" resetting, when the "trip distance" reaches 99999.9 km or when the "Travel time" reaches 999:59 (999 hours and 59 minutes);

❒ after disconnection/reconnection of the battery.

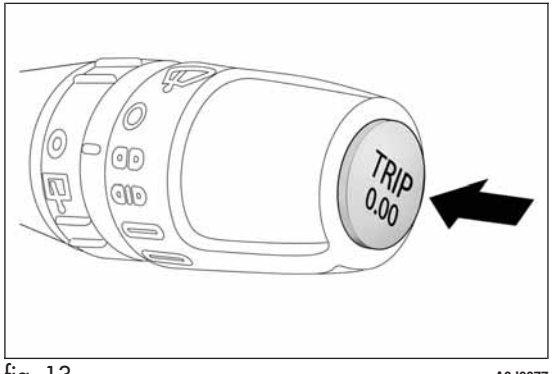

fig. 13 A0J0077

IMPORTANT The reset operation when "Trip A" details are being displayed only resets the information associated with this function.

IMPORTANT The reset operation when "Trip B" details are being displayed resets only the information associated with this function.

Start of journey procedure

With the ignition key at MAR-ON, reset by pressing the TRIP 0.00 button and holding it down for more than 2 seconds.

Trip Exit

You can automatically exit the Trip function once all the values have been displayed or by holding the SET/⮌ button down for more than 1 second.

SYMBOLS

Some car components have coloured labels whose symbols indicate precautions to be observed when using this component. Under the bonnet there is also a label that summarises all the symbols.

ALFA ROMEO CODE SYSTEM

To further protect your car from theft, it has been fitted with an engine immobilising system. It is automatically activated when the ignition key is removed.

Each key contains an electronic device which modulates the signal emitted during ignition by an antenna built into the ignition device. The modulated signal, which changes each time the engine is started, is the "password", by means of which the control unit recognises the key and enables to start the engine.

OPERATION

Each time the car is started by turning the ignition key to MAR, the Alfa Romeo CODE system control unit sends an acknowledgement code to the engine management control unit to deactivate the inhibitor.

The code is sent only if the Alfa Romeo CODE system control unit has recognised the code transmitted from the key.

Each time the ignition key is turned to STOP, the Alfa Romeo CODE system deactivates the functions of the engine management control unit. If, during starting, the code is not correctly recognised, the warning light switches on in the instrument panel.

In this case, turn the key to STOP and then to MAR; if it is still locked, try again with the other keys that come with the vehicle. If you are still unable to start the engine contact Alfa Romeo Authorized Services.

Activation of warning light while driving

- ❒ If the warning light switches on, this means that the system is running a self-diagnosis (for example due to a voltage drop).
- ❒ If the warning light remains on, contact Alfa Romeo Authorized Services.

The electronic components inside the key may be damaged if the key is subjected to strong shocks.

THE KEYS

CODE CARD
(for versions/markets, where provided)

The CODE card fig. 14 is provided with the keys and bears the following:

❒ A - electronic code;

❒ B - mechanical code.

Keep the codes in a safe place, not in the car.

KEY WITHOUT REMOTE CONTROL

The metal insert A fig. 15 operates:

❒ the ignition switch;

❒ the door lock.

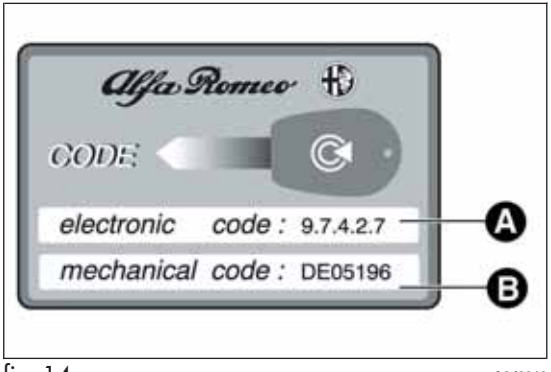

fig. 14 A0J0212

KEY WITH REMOTE CONTROL
(for versions/markets, where provided)

The metal insert A fig. 16 operates:

❒ the ignition switch;

❒ the door lock.

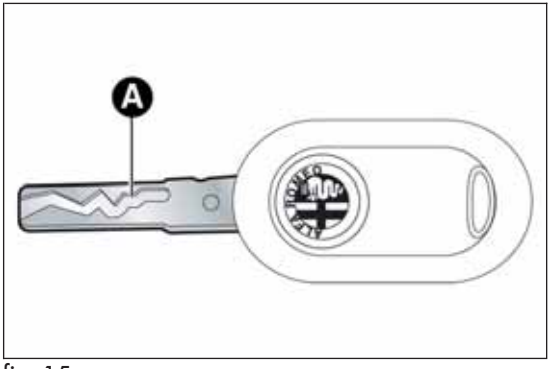

fig. 15 A0J0211

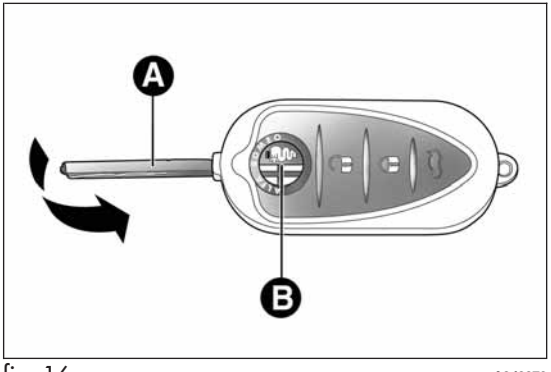

fig. 16 A0J0072

Press button B to open/close the metal insert.

Press button B fig. 16 only with the key away from your body, especially your eyes and from objects which could get damaged (e.g. your clothes). Do not leave the key unattended to avoid the button being accidentally pressed while it is being handled, e.g. by a child.

Unlocking the doors and the tailgate

Briefly press button : for unlocking of doors and luggage compartment, timed switching-on of internal roof lights and double flashing of direction indicators (for versions/markets, where provided).

The doors are unlocked automatically if the fuel cut-off system intervenes.

Once the doors are locked, if one or more doors or the boot are not closed correctly, the LED and direction indicators start flashing quickly.

Locking the doors and the tailgate

Briefly press button : for locking of doors and luggage compartment, with switching-off of roof light and single flashing of direction indicators (for versions/markets, where provided).

If one or more doors are open, the doors will not be locked. This is indicated by a rapid flashing of the direction indicators (for versions/markets, where provided). If the luggage compartment is open, the doors will, however, be locked.

When a speed of over 20 km/h is reached, the doors are automatically locked if this specific function has been set (only on versions with multifunction reconfigurable display).

When the doors are locked, LED A fig. 17 switches on for a few seconds after which it starts to flash (deterrent function).

When the doors are locked from inside the car (by pressing the button) the LED will remain on constantly.

Opening the luggage compartment

Press the button to open the luggage compartment remotely. The direction indicators will flash twice to indicate that the boot has been opened.

REQUESTING ADDITIONAL REMOTE CONTROLS

The system can recognise up to 8 remote controls. If you need to request a new remote control, contact Alfa Romeo Authorized Services, taking the CODE Card (for versions/markets, where provided), an identity document and documents proving ownership of the car with you.

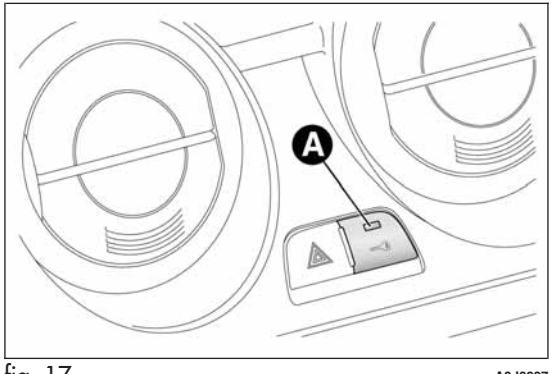

fig. 17 A0J0027

REPLACING THE BATTERY IN THE KEY WITH REMOTE CONTROL

Proceed as follows:

❒ press button A fig. 18 and move the metal insert B to opening position; turn screw C to 🔓 using a fine bit screwdriver;

❒ remove battery compartment D and replace battery E respecting the polarity; reinsert compartment D in the key and secure it by turning screw C to 🔒 .

Used batteries are harmful to the environment. They must be disposed of as specified by law in special containers or taken to Alfa Romeo Authorized Services, which will take care of their disposal.

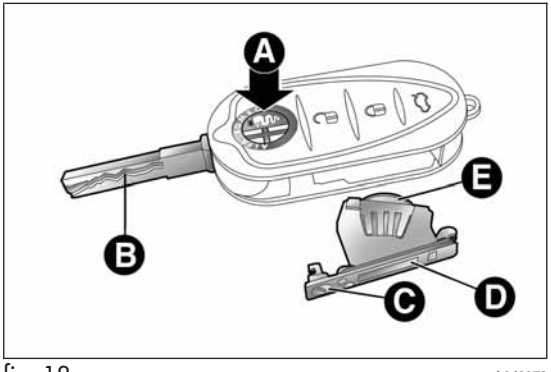

fig. 18 A0J0073

SAFE LOCK DEVICE

(for versions/markets, where provided)

This safety device inhibits the operation of the interior door handles and the door locking/unlocking button.

We recommend that you activate this device each time you park the car.

Activating the device

The device is enabled on all the doors by pressing the 🔒 button on the key twice quickly.

The direction indicators flash 3 times and LED A fig. 19 flashes to indicate that the device has been activated. The device does not switch on if one or more doors are not properly shut.

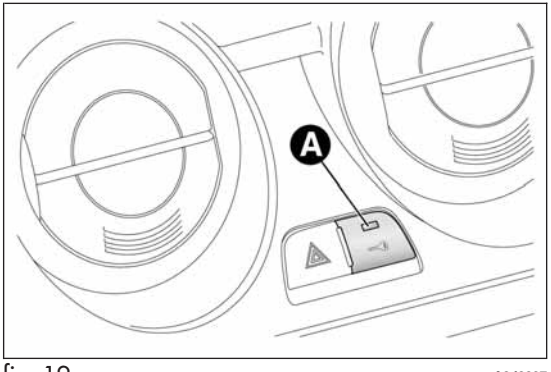

fig. 19 A0J0027

Deactivating the device

The device deactivates automatically when:

❒ the key insert is turned to opening position in the driver side door;

❒ the 🔓 button is pressed on the remote control;

❒ the ignition key is turned to MAR.

⚠ ***Once the safe lock device is engaged it is impossible to open the doors from inside the car. Before engaging the device, check that there is no one left on board. If the remote control battery is flat, the device can only be deactivated by using the metal insert in one of the door locks.***

The main functions that can be activated with the keys (with or without remote control) are the following:

Type of key	Unlocking the doors	Locking the doors from the outside	Safe Lock activation (*)	Unlocking the tailgate	Lowering windows (*)	Raising windows (*)
Key without remote control/ Key with remote control	Anticlockwise key turn (driver side)	Clockwise key turn (driver side)	-	-	-	-
Key with remote control	Brief press of 🔓 button	Brief press of 🔒 button	Double press of 🔒 button	Brief press of 🚗 button	Long press (more than 2 seconds) of 🔓 button	Long press (more than 2 seconds) of 🔒 button
Flashing direction indicators (only with key with remote control)	2 flashes	1 flash	3 flashes	2 flashes	2 flashes	1 flash
Deterrent LED	Switching off	Switching on constantly for about 3 seconds, followed by deterrence LED flashing	Double flash, followed by deterrence flashing	Deterrence flashing	Switching off	Deterrence flashing

(*)For versions/markets, where provided.

IMPORTANT Window opening operation is a consequence of a door unlocking control; window closing operation is a consequence of a door locking control.

ALARM

(for versions/markets, where provided)

ALARM ACTIVATION

The alarm activates in the following cases:

- ❒ wrongful opening of a door/bonnet/luggage compartment (perimeter protection);
- ❒ wrongful operation of the ignition switch (key turned to MAR);
- ❒ cutting of the battery cables;
- ❒ movement inside the passenger compartment (volumetric protection);
- ❒ anomalous lifting/tilting of the car (for versions/markets, where provided).

Operation of the alarm is indicated by an acoustic and visual signal (flashing of the direction indicators for several seconds). The alarm activation modes may vary according to the market. There is a maximum number of acoustic/visual cycles. When this is reached the system returns to normal operation.

IMPORTANT The engine locking function is guaranteed by the Alfa Romeo CODE, which is automatically activated when the ignition key is extracted from the ignition switch.

IMPORTANT The alarm is adapted to meet requirements in various countries.

SWITCHING ON THE ALARM

With the doors and bonnet closed and the ignition key either turned to STOP or removed, direct the key with the remote control towards the car, then press and release the 🔒 button. Except for specific markets, the system emits a visual and acoustic signal and enables door locking.

A self-diagnosis stage precedes the switching on of the alarm: in the event of faults, the system will generate a further acoustic and/or visual signal through the LED on the dashboard.

If after the alarm is switched on, a second acoustic signal is emitted and/or a visual signal via the LED on the dashboard, wait about 4 seconds and switch off the alarm by pressing the 🔓 button, check that the doors, bonnet and luggage compartment are closed correctly and then reactivate the system by pressing the 🔒 button.

If the alarm emits an acoustic signal even when the doors, bonnet and boot are correctly closed, a fault has occurred in system operation: in this case, contact Alfa Romeo Authorized Services.

ALARM SELF-ACTIVATION

(for versions/markets, where provided)

If the alarm has not been activated using the remote control, once about 30 seconds have elapsed from when the ignition key was turned to STOP and a door or the tailgate was last opened and then closed, the alarm activates automatically.

This is indicated by the LED on the button A fig. 20 lighting up intermittently and the indications of activation described previously.

To deactivate the alarm, press the 🔓 button on the remote control.

The alarm also activates when the doors are closed by turning the metal insert of the key in the driver side door latch. If the system self-activates, the doors are not locked.

SWITCHING OFF THE ALARM

Press the 🔓 button. The following operations are performed (excluding specific markets):

❒ the direction indicators flash briefly twice;

❒ there are two brief acoustic signals;

❒ unlocking of the doors.

IMPORTANT The alarm does not switch off when the central opening is activated using the metal insert in the key.

VOLUMETRIC/ANTI-LIFT PROTECTION

To guarantee the correct operation of the protection, close the side windows and any sun roof completely (for versions/markets, where provided).

To disable the function, press button A fig. 20 before activating the alarm. When the function is disabled, this is indicated by the LED on the button flashing for several seconds.

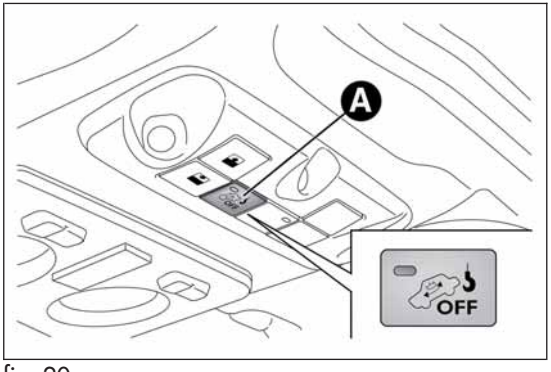

fig. 20 A0J0226

Any disabling of the volumetric/anti-lift protection must be repeated each time the instrument panel is switched off.

DISABLING THE ALARM

To permanently disable the alarm (e.g. during a lengthy period of car inactivity), lock the car by turning the metal insert of the key with remote control in the lock.

IMPORTANT If the batteries of the key with the remote control run out or there is a fault with the system, the alarm can be switched off by inserting the key in the ignition switch and turning it to MAR.

IGNITION DEVICE

The key can be turned to three different positions fig. 21:

❒ STOP: engine off, key can be removed, steering column locked. Some electrical devices (e.g. car radio, central door locking system, alarm, etc.) are enabled;

❒ MAR: driving position. All electrical devices are enabled;

❒ AVV: engine start-up.

The ignition switch is fitted with a safety system that requires the ignition key to be turned back to STOP if the engine does not start, before the starting operation can be repeated.

If the ignition switch is tampered with (e.g.: attempted theft), have it checked over by Alfa Romeo Authorized Services before driving again.

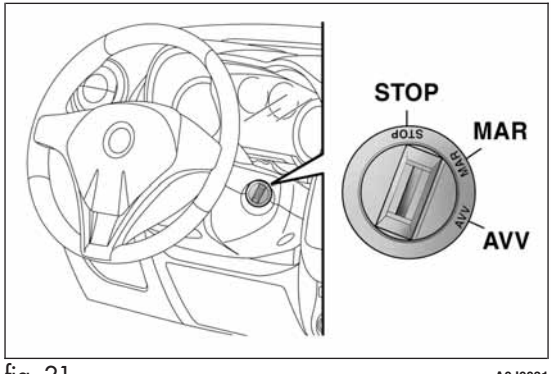

fig. 21 A0J0031

Always remove the key when you leave the car to prevent someone from accidentally operating the controls. Remember to engage the handbrake. Engage 1st gear if the car is parked uphill or reverse if the car is parked downhill. Never leave children unattended in the car.

STEERING LOCK

Engagement

When the key is at STOP, remove the key and turn the steering wheel until it locks.

Disengagement

Move the steering wheel slightly and turn the ignition key to MAR.

It is absolutely forbidden to carry out any after-market operation involving steering system or steering column modifications (e.g.: installation of anti-theft device) that could badly affect performance and safety, invalidate the warranty and also result in non-compliance of the car with type-approval requirements.

Never remove the key while the car is moving. The steering wheel will lock as soon as it is turned. This holds true for cars being towed as well.

SEATS

FRONT SEATS

All adjustments must be made with the car stationary.

Lengthwise adjustment

Lift the lever A fig. 22 and push the seat forwards or backwards: in driving position your arms should rest on the rim of the steering wheel.

After releasing the adjustment lever, always check that the seat is locked on the guides by trying to move it back and forth. If the seat is not locked into place, it may unexpectedly slide and cause the driver to lose control of the car.

Height adjustment

(for versions/markets, where provided)

Move lever B fig. 22 up or down until the desired height is achieved.

IMPORTANT Carry out the adjustment whilst seated in the driver's seat.

Backrest angle adjustment

Turn knob C fig. 22 until the desired position is reached.

For maximum safety, keep the back of your seat upright, lean back into it and make sure the seat belt fits closely across your chest and pelvis.

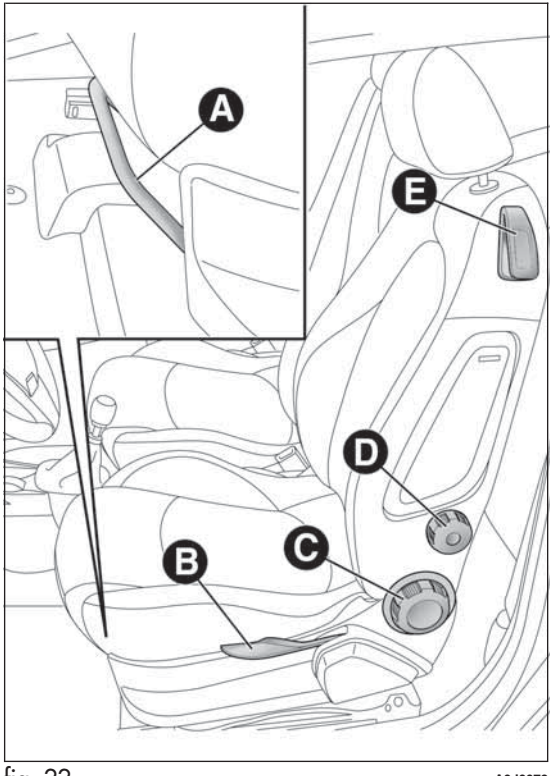

fig. 22 A0J0078

Lumbar adjustment
(for versions/markets, where provided)

Turn knob D fig. 22 until the desired position is reached.

Backrest folding

To access the rear seats, pull handle E upwards fig. 22: the backrest will fold and the seat will slide forwards when you push the backrest.

Moving the backrest backwards will return the seat to its initial position.

Always check that the seat is firmly locked on the guides, trying to push it forwards and backwards.

Seat heating
(for versions/markets, where provided)

With key at MAR-ON, press button A fig. 23 (one per seat) to activate/deactivate the function.

When the function is enabled, the LED on the button switches on.

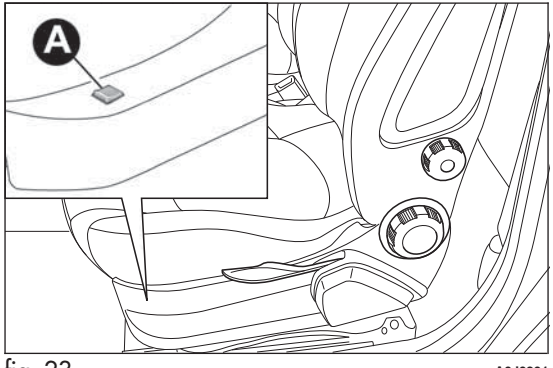

fig. 23 A0J0301

SPORTS CONFIGURATION FRONT SEATS
(for versions/markets, where provided)

Lengthwise adjustment

Lift the lever A fig. 24 and push the seat forwards or backwards: in driving position your arms should rest on the rim of the steering wheel.

Backrest angle adjustment

Turn knob B fig. 24 until the desired position is reached.

Backrest folding

To access the rear seats, pull handle C upwards (located behind the backrest) fig. 24. Then release the lever and, pushing on the backrest, slide the seat forward.

REAR SEAT

On versions with sports configuration front seats, the rear seat is available with an integral or split seat and is only 2-seater.

EASY ENTRY

This function allows easy access to the rear seats.

To access the rear seats, raise handle E and move the seat's backrest forwards: the seat moves forwards automatically.

Bringing the backrest back to its normal position will move the seat back to its initial position.

If the backrest encounters an obstacle when moving back (e.g. the knees of the passenger in the back seat), the seat will stop, move forwards by a few centimetres and then stop in this position.

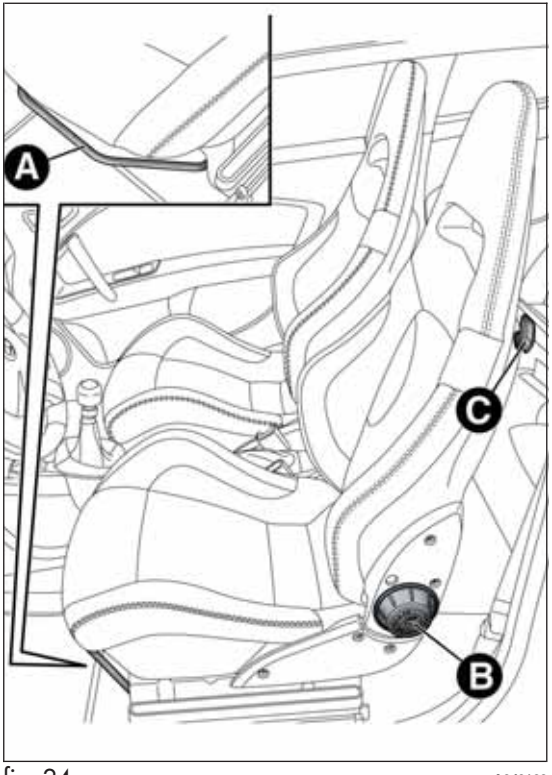

fig. 24 A0J0163

HEAD RESTRAINTS

FRONT

Head restraints are adjustable in height and they lock automatically into the desired position:

❒ upwards adjustment: raise the head restraint until it clicks into place;

❒ downwards adjustment: press button A fig. 25 and lower the head restraint.

Head restraints must be adjusted so that the head, rather than the neck, rests on them. Only in this case can they protect your head correctly.

To remove the head restraints:

❒ raise the head restraints to their maximum height;

❒ press buttons A and B fig. 25, then remove the head restraints by pulling them upwards.

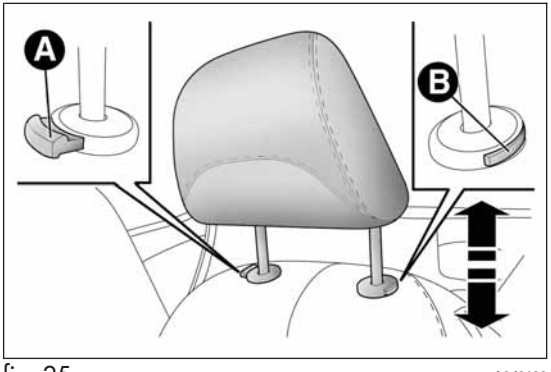

fig. 25 A0J0130

"Anti-Whiplash" device

The head restraints are equipped with an "Anti-Whiplash" device, which reduces the distance between head and head restraint in the event of a rear impact, thus mitigating the "whiplash" effect.

The head restraint may move when the backrest is pressed by the occupant's torso or hand: this behaviour is caused by the system and should not be considered a malfunction.

REAR

Two height-adjustable head restraints are provided for the back seats (to adjust the height see the previous paragraph).

On some versions a head restraint is also provided for the central seat.

To remove the head restraints:

❒ raise the head restraints to their maximum height;

❒ press buttons A fig. 26, then remove the head restraints by pulling them upwards.

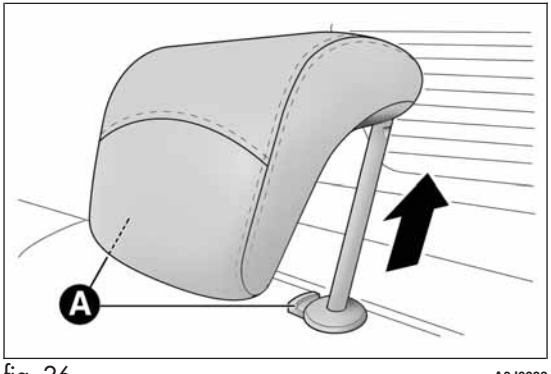

fig. 26 A0J0083

STEERING WHEEL

It can be adjusted axially and vertically.

To adjust, release A fig. 27 by pushing it forwards (position 1) and adjust the steering wheel. Then lock lever A by pulling it towards the steering wheel (position 2).

All adjustments must be carried out only with the vehicle stationary and engine off.

It is absolutely forbidden to carry out any after-market operation involving steering system or steering column modifications (e.g. installation of anti-theft device) that could badly affect performance and safety, invalidate the warranty and also result in the car not meeting type-approval requirements.

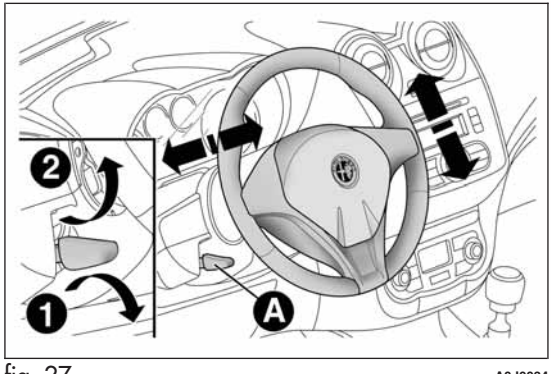

fig. 27 A0J0034

REAR VIEW MIRRORS

INTERNAL MIRROR

Operate lever A fig. 28 to adjust the mirror into two different positions: normal or anti-glare.

Electrochromic interior mirror
(for versions/markets, where provided)

Some versions feature an electrochromic mirror fig. 29 with an ON/OFF switch to activate/deactivate the electrochromic function.

When reverse gear is engaged, the mirror is automatically set for daytime use.

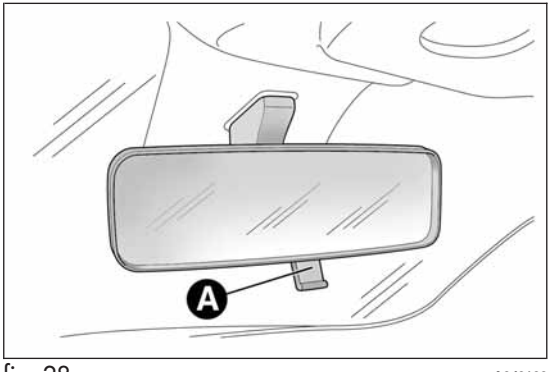

fig. 28 A0J0108

DOOR MIRRORS

As the driver's door mirror is curved, it may slightly alter the perception of distance.

Mirror adjustment

The mirrors can only be adjusted/folded with the ignition in the MAR position.

Choose the desired mirror using device A fig. 30:

❒ device in position 1: left mirror selected

❒ device in position 2: right mirror selected.

To adjust the selected mirror, press B button in the four directions shown by the arrows.

IMPORTANT Once adjustment is complete, rotate device A to position 0 to prevent accidental movements.

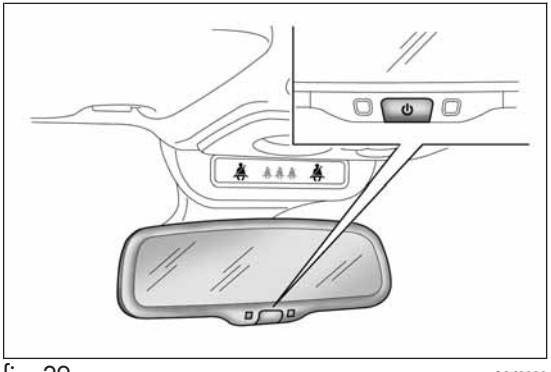

fig. 29 A0J0336

Electric mirror folding

(for versions/markets, where provided)

To fold back the mirrors press C fig. 30. Press the button again to restore the mirrors to the driving position.

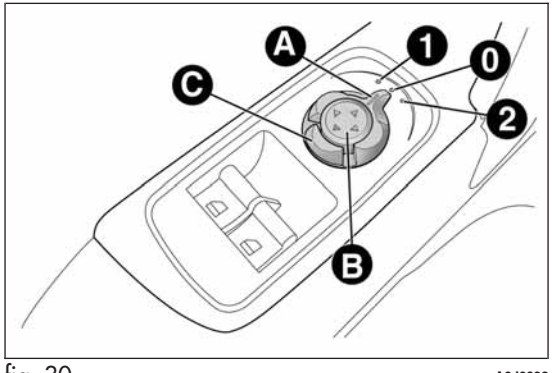

fig. 30 A0J0022

Mirror manual folding

If necessary, fold the mirrors by moving them from position 1 to position 2 fig. 31.

IMPORTANT When driving the mirrors must always be in position 1.

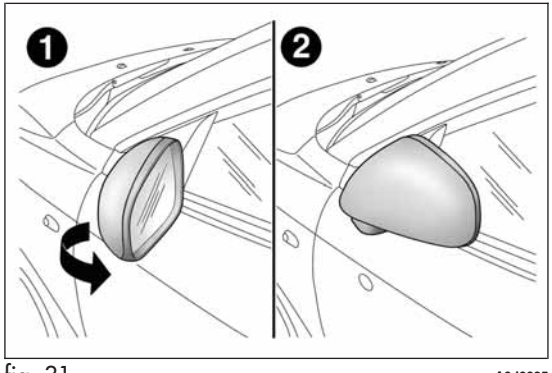

fig. 31 A0J0035

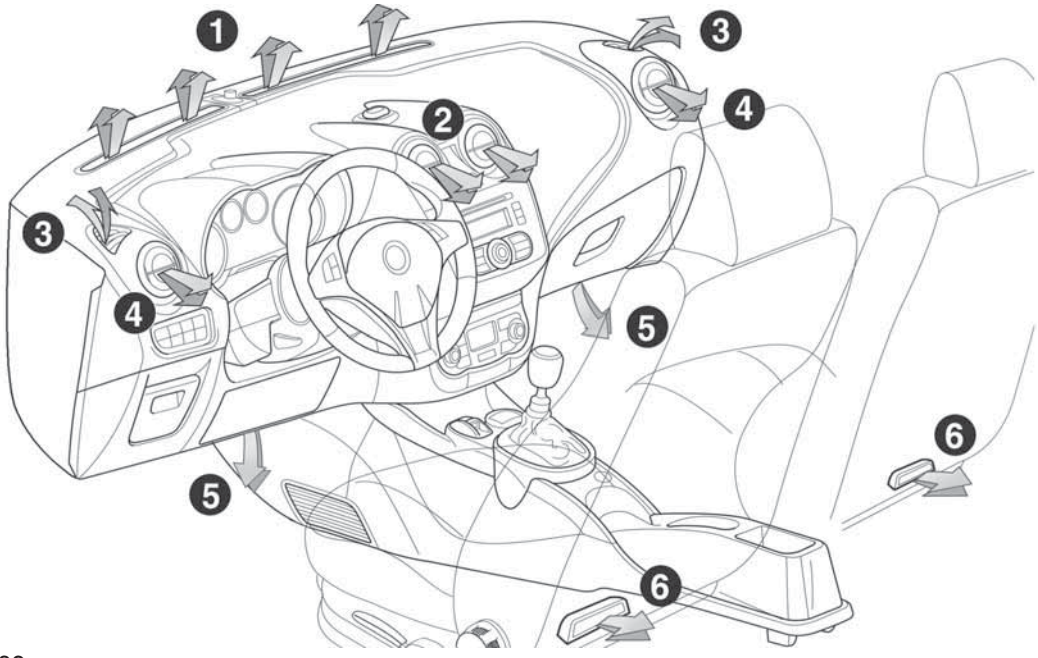

fig. 32

DIFFUSERS

1. Fixed upper diffuser – 2. Adjustable centre vents – 3. Fixed side vents – 4. Adjustable side vents – 5. Lower diffusers for front seats – 6. Lower diffusers for rear seats

CLIMATE CONTROL/HEATING SYSTEM

CONTROLS

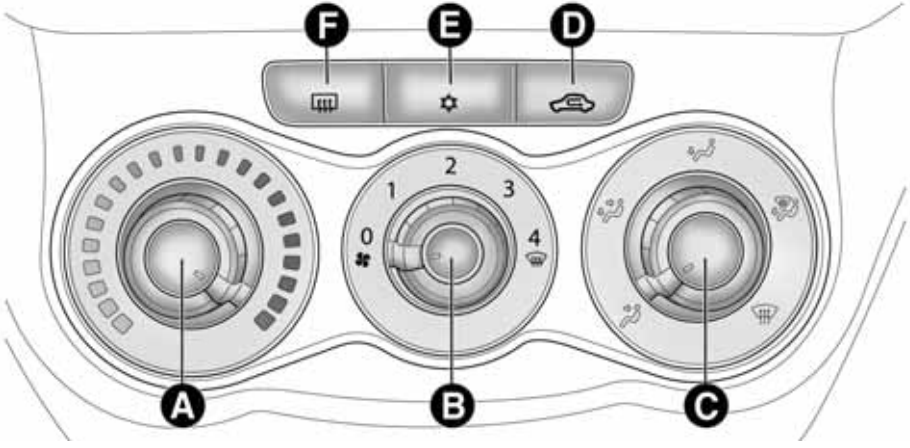

fig. 33

A0J0074

A - Air temperature adjustment knob

❒ blue section = cold air

❒ red section = hot air

B - Fan activation/adjustment knob

❒ 0 = fan off

❒ 1-2-3 = fan speed

❒ 4 = maximum fan speed

C - Air distribution knob

❒ air flow towards driver/passenger body;

❒ air flow towards driver/passenger body and footwell;

❒ air flow towards front and rear footwell;

❒ air flow towards footwell and windscreen;

❒ air flow towards windscreen

❒ 4 = maximum fan speed

D - Air recirculation on/off button

E - Climate control on/off button (only versions with manual climate control)

F - Heated rear window on/off button;

PASSENGER COMPARTMENT VENTILATION

Proceed as follows to adjust the ventilation:

❒ turn knob A to blue section;

❒ press button D to disable internal air recirculation (LED on button off);

❒ turn knob C to ;

❒ turn knob B to desired speed.

CLIMATE CONTROL (cooling) (only present on versions with manual climate control)

To cool, proceed as follows:

❒ turn knob A to blue section;

❒ press button D to enable internal air recirculation (LED on button on);

❒ turn knob C to ;

❒ press button E to turn the climate control system on and turn knob B to at least 1 (1st speed); for faster action, turn knob B to 4 (maximum fan speed).

Adjusting cooling

❒ turn knob A to the right to increase the temperature;

❒ press button D to turn internal air recirculation off (circular LED around the button off);

❒ turn knob B to reduce the fan speed.

PASSENGER COMPARTMENT HEATING

For rapid heating, proceed as follows:

❒ turn knob A to the red section;

❒ turn knob C to the desired symbol;

❒ turn knob B to desired speed.

Rapid heating

For rapid heating, proceed as follows:

❒ turn knob A to the red section;

❒ press button D to activate internal air recirculation;

❒ turn knob C to ;

❒ turn knob B to 4 (maximum fan speed).

Then use the controls to maintain the desired comfort conditions and press button D to turn internal air recirculation off (LED on button off) and to prevent misting.

IMPORTANT When the engine is cold, it takes a few minutes to obtain rapid heating.

FRONT WINDOW FAST DEMISTING/DEFROSTING (WINDSCREEN AND SIDE WINDOWS)

The climate control system is very useful for making demisting faster. Adjust the controls as described previously and switch on the climate control system by pressing button E.

Proceed as follows:

❒ turn knob A to the red section;

❒ turn knob B to 4 (maximum fan speed);

❒ turn knob C to ;

❒ press button D to disable internal air recirculation (LED on button off).

After demisting/defrosting, operate the controls to restore the required comfort conditions.

Window demisting

The climate control system is very useful in preventing the windows from misting up in the event of high levels of humidity.

In the event of considerable outside moisture and/or rain and/or considerable differences in temperature inside and outside the passenger compartment, proceed as follows to demist the windows:

❒ turn knob A to the red section;

❒ press button D to disable internal air recirculation (LED on button off);

❒ turn knob C to with the possibility of moving it to position if demisting does not occur;

❒ turn knob B to the 2nd speed.

HEATED REAR WINDOW DEMISTING/DEFROSTING

Press button F ( ) to turn the function on/off. The function is automatically deactivated after 20 minutes.

For versions/markets where provided, press the button to activate demisting/defrosting of door mirrors, heated windscreen (for versions/markets, where provided) and heated nozzles (for versions/markets, where provided).

IMPORTANT Do not affix stickers to the inside of the heated rear window over the heating filaments, to avoid damage that might cause them to stop working properly.

INTERNAL AIR RECIRCULATION

Press button D ( ). It is advisable to switch air recirculation on while standing in traffic or in tunnels to prevent the introduction of polluted air.

Do not use the function for a long time, particularly if there are many passengers on board, to prevent the windows from misting up.

IMPORTANT Internal air recirculation makes it possible to reach the required heating or cooling conditions more quickly depending on the mode selected. Do not use the air recirculation function on rainy/cold days as it would considerably increase the possibility of the windows misting.

SYSTEM MAINTENANCE

In winter, the climate control system must be turned on at least once a month for about 10 minutes.

Have the system checked by Alfa Romeo Authorized Services before summer.

AUTOMATIC DUAL ZONE CLIMATE CONTROL

(for versions/markets, where provided)

CONTROLS

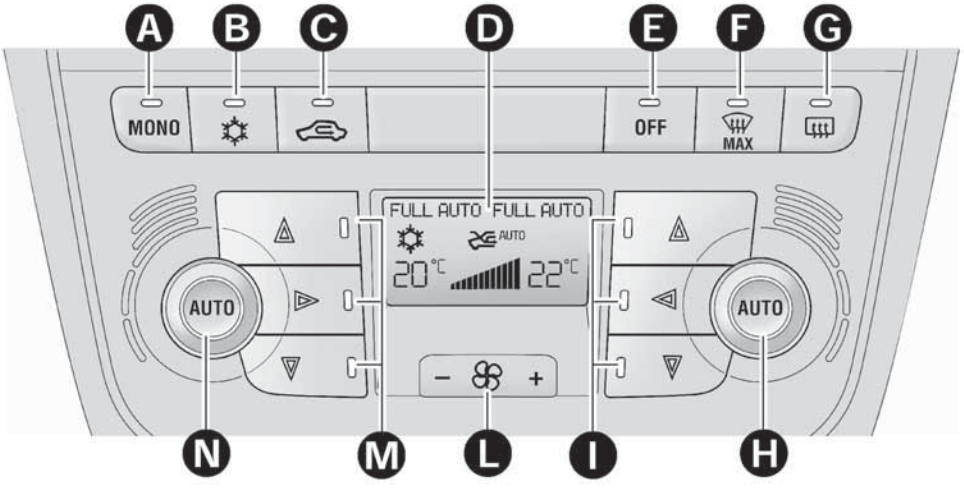

fig. 34

A0J0037

A - driver/passenger side MONO function activation button (alignment of set temperatures);

B - climate control compressor on/off button;

C - internal air recirculation on/off button;

D - display;

E - climate control off button;

F - MAX-DEF function activation button (rapid defrosting/demisting of front windows);

G - heated rear window on/off button;

H - AUTO function activation button (automatic operation) and passenger side temperature adjustment knob;

I - passenger side air distribution selection button;

L - fan speed increase/decrease;

M - driver side air distribution selection button;

N - AUTO function (automatic operation) activation button and driver side temperature adjustment knob.

DESCRIPTION

The automatic dual zone climate control system regulates the air temperatures/distribution in the passenger compartment in two areas: driver side and passenger side.

The system keeps the passenger compartment comfort level constant and compensates for any variations in external conditions, including solar radiation detected by a specific sensor.

The automatically controlled parameters and functions are:

❒ air temperature at the driver's/front passenger side vents;

❒ air distribution at the driver's/front passenger side vents;

❒ fan speed (continuous variation of the air flow);

❒ compressor engagement (for cooling/dehumidifying the air);

❒ air recirculation.

All these functions can be adjusted manually by operating the system and selecting one or more functions and modifying their parameters. Automatic control of the manually changed functions will be suspended: the system will only override the settings for safety reasons.

Manual selections always have higher priority than automatic settings and are stored until the AUTO button is pressed, except for cases in which the system intervenes for safety reasons.

You can adjust one function manually without affecting the automatic control of the others. The amount of air introduced into the passenger compartment is not affected by vehicle speed; it is electronically controlled by a fan.

The air temperature is always automatically controlled according to the temperature set on the display (except for when the system is off or in certain conditions when the compressor is not running).

The system allows the following to be set or adjusted manually:

❒ driver's/passenger side air temperature;

❒ fan speed (continuous variation);

❒ air distribution to 7 positions (driver/passenger);

❒ compressor enabling;

❒ rapid defrosting/demisting function;

❒ air recirculation;

❒ heated rear window;

❒ system deactivation.

SWITCHING ON THE CLIMATE CONTROL SYSTEM

The climate control system can be switched on in different ways: we recommend pressing one of the AUTO buttons and turning the knobs to set the desired temperatures.

It is possible to select different temperatures for the driver and passenger, with a maximum difference of 7°C.

In this way the system operates completely automatically to adjust the temperature, quantity and distribution of the air introduced into the passenger compartment. It also manages the air recirculation system and the activation of the air conditioning compressor.

During fully automatic operation the only manual intervention is the possible activation of the following functions:

- ❒ MONO, to align the air temperature and distribution set on the passenger side with that on the driver side;
- ❒ air recirculation (keeping the function always either on or off);
- ❒ to speed up demisting/defrosting of front windows, rear window and door mirrors;
- ❒ to demist/defrost heated rear window and door mirrors.

During automatic operation, you can change the set temperatures, air distribution and fan speed at any time by using the relevant buttons or knobs: the system will automatically change the settings to adjust to the new requirements.

In this way the climate control system will continue to automatically manage all functions except for those that have been manually adjusted. The fan speed is the same in all the zones of the passenger compartment.

ADJUSTING THE AIR TEMPERATURE

Turn knob N or H to the right or left to adjust the air temperature: knob N for the front left area, knob H for the front right area of the passenger compartment. The set temperatures are shown on the display.

Press the MONO button to align the air temperature of the two areas: to set the same temperature, turn knob N.

To return to separate management of air temperature and distribution between the two areas, turn knob N or H or press the MONO button again (when the LED on the button is on).

Turn the knobs fully right or left to engage HI (maximum heating) or LO (maximum cooling) respectively. To deactivate these functions, turn the temperature knob to the desired temperature.

SETTING THE AIR DISTRIBUTION

By pressing the buttons (▲ /▼ / ▶), it is possible to set one of the 7 possible air distributions manually:

- ▲ Air flow to the windscreen and front side window diffusers to demist/defrost them.
- ▶ Air flow at central and side dashboard vents to ventilate the chest and the face during the hot season.
- ▼ Air flow to the front and rear footwell diffusers. This air distribution setting heats the passenger compartment most quickly, giving a prompt sensation of warmth.
- ▶ ▼ Air flow distributed between footwell vents (hotter air) and central and side dashboard vents (cooler air). This distribution setting is useful in spring and autumn on sunny days.
- ▲ ▼ Air flow distributed between footwell diffusers and windscreen and front side window defrosting/demisting diffusers. This distribution setting allows the passenger compartment to warm up efficiently and prevents the windows from misting up.
- ▲ ▶ Air flow distribution between windscreen demisting/defrosting diffusers and side and central dashboard vents. This allows air to be sent to the windscreen in conditions of strong sunlight.
- ▲ ▶ ▼ Air flow distribution to all vents on the car.

In FULL AUTO mode, the climate control system automatically manages air distribution (the LEDs on buttons I and M are off). When set manually, the air distribution is shown by the LEDs on the selected buttons.

In combined function mode, functions are enabled together with those already set when the relevant button is pressed. If a button whose function is already active is pressed, the operation is cancelled and the corresponding LED switches off. To restore automatic control of the air distribution after a manual selection, press the AUTO button.

When the driver selects air distribution to the windscreen, the air distribution on the passenger side is also aligned to the windscreen. The passenger can still select a different air distribution mode by pressing the corresponding buttons.

ADJUSTING THE FAN SPEED

Press button L to increase/decrease the fan speed. The speed is shown by the lit bars on the display:

❒ maximum fan speed = all bars lit;

❒ minimum fan speed = one bar lit.

The fan can only be excluded if the climate control compressor has been switched off by pressing button B.

IMPORTANT To restore automatic control of the fan speed after a manual adjustment, press the AUTO button.

AUTO BUTTONS

Press the AUTO buttons to make the system automatically adjust the quantity and distribution of the air introduced into the respective areas of the passenger compartment; all previous manual settings will be cancelled (this condition is indicated by the text FULL AUTO on the display).

By manually adjusting at least one of the functions automatically managed by the system (air recirculation, air distribution, fan speed or switching off the air conditioner compressor), the word FULL will disappear from the display, indicating that the system is no longer automatically controlling all the functions (the temperature will still be controlled automatically).

IMPORTANT If the system is no longer able to reach/maintain the requested temperature in the various areas of the passenger compartment, the set temperature will flash and after approximately 1 minute the word AUTO will disappear.

To restore automatic control of the system after one or more manual adjustments, press the AUTO button.

MONO BUTTON

Press the MONO button to align the passenger side air temperature with that of the driver side. In this way it is also possible to set the air distribution between the two areas by turning knob N.

This function makes temperature regulation easier when the driver is travelling alone.

To return to separate management of the air temperature and distribution, turn knob H to set the passenger side temperature or press the MONO button when the LED on the button is on.

AIR RECIRCULATION

The air recirculation is managed according to the following operating logics:

- ❒ automatic activation: press one of the AUTO buttons. Activation is indicated by the word AUTO appearing on the display;
- ❒ override on (inside air recirculation always on): indicated by the LED on button C and the symbol on the display;
- ❒ override off (air recirculation constantly off, air intake from the outside): signalled by the LED on button C switching off and by the symbol in the display disappearing. Forced activation/deactivation can be selected by pressing button C.

IMPORTANT The activation of recirculation makes it possible to reach the required passenger compartment heating/cooling conditions faster.

It is, however, inadvisable to use it on rainy/cold days as it would considerably increase the possibility of the windows misting up inside (especially if the climate control system is off).

When the outside temperature is low, recirculation is forced off (air drawn in from the outside) to prevent the windows from misting up. In automatic operation, air recirculation will be managed automatically by the system according to external environmental conditions.

When manual recirculation control is set, the word FULL disappears from the display and AUTO disappears from the icon.

It is advisable not to use the air recirculation function when the outside temperature is low to prevent the windows from rapidly misting up.

CLIMATE CONTROL COMPRESSOR

Press button B to activate/deactivate the compressor. The system remembers that the compressor has been switched off, even after the engine has stopped.

When the compressor is switched off the system deactivates air recirculation to prevent the windows from misting up. In this case, although the system is capable of maintaining the required temperature, the word FULL will disappear from the display.

If, however, the system is unable to maintain the requested temperature, the temperature indications flash and the word AUTO disappears.

To restore automatic control of compressor engagement, press button B again or press the AUTO button.

With compressor off:

- ❒ if the outside temperature is higher than the set one, the system will not be able to satisfy the request. The temperature value will then flash on the display for a few seconds and the word AUTO will disappear;
- ❒ the fan speed can be reset manually.

With the compressor on and the engine running, the fan speed cannot be lower than one bar on the display.

IMPORTANT With the climate control compressor off, air cannot be introduced to the passenger compartment with a temperature lower than the outside temperature; moreover, under certain environmental conditions, windows could mist rapidly since the air is not dehumidified.

RAPID WINDOW DEMISTING/ DEFROSTING (MAX-DEF function)

Press button F to activate windscreen and side window demisting/ defrosting. The climate control system carries out the following operations:

❒ switches on the air conditioning compressor when climatic conditions are suitable;

❒ deactivates air recirculation;

❒ sets maximum air temperature (HI) in both zones;

❒ sets fan speed according to the engine coolant temperature;

❒ directs air flow to windscreen and front side windows diffusers;

❒ activates the heated rear window.

IMPORTANT The MAX-DEF function remains on for about 3 minutes from when the engine coolant reaches the appropriate temperature.

When the function is active the words FULL AUTO disappear from the display. With the function active the only possible manual adjustments are adjusting the fan speed and turning the heated rear window off.

Pressing buttons B, C, F or AUTO switches off the MAX-DEF function and restores the settings that were present before the function was activated.

HEATED REAR WINDOW DEMISTING/DEFROSTING

Press the button to activate heated rear windscreen demisting/ defrosting. This function switches off automatically after about 20 minutes or when the engine is turned off. It is not switched on automatically the next time the engine is started.

For versions/markets where provided, press the button to activate demisting/defrosting of door mirrors, heated windscreen (for versions/markets, where provided) and heated nozzles (for versions/ markets, where provided).

IMPORTANT Do not affix stickers to the inside of the heated rear window over the heating filaments, to avoid damage that might cause them to stop working properly.

TURNING THE CLIMATE CONTROL SYSTEM OFF

Press the OFF button.

With climate control off:

❒ air recirculation is on, thus isolating the passenger compartment from the outside;

❒ the compressor is off;

❒ the fan is off;

❒ the heated rear window can be switched on or off;

IMPORTANT The climate control system control unit stores the temperatures set before the system was switched off and restores them when any button of the system is pressed (except for button G). If the function of the pressed button was not active before switching off, that function will also be activated. If it was active, it will be restored.

To restart the climate control system in fully automatic mode press the AUTO button.

ADDITIONAL HEATER
(only diesel versions)
(for versions/markets, where provided)

This allows the passenger compartment to be heated more quickly in cold weather conditions. The additional heater turns off automatically after the required comfort conditions are achieved.

Automatic dual zone climate control system
(for versions/markets, where provided)

The additional heater activates automatically when the ignition key is turned to MAR-ON.

Manual heater and manual climate control

The additional heater activates automatically when knob N is turned to the end of the red section and the fan is set to at least 1st speed.

IMPORTANT The heater only works if the outside temperature and engine coolant temperature are low. The heater will not activate if the battery voltage is too low.

EXTERIOR LIGHTS

LEFT STALK

The left stalk fig. 35 operates most of the exterior lights. The external lights can only be switched on when the ignition key is at MAR.

The instrument panel and the various controls on the dashboard will come on when the external lights are switched on.

DAYTIME RUNNING LIGHTS (DRL)
"Daytime Running Lights"

With the ignition key at MAR and ring nut A fig. 35 turned to ○ , the daytime running lights switch on. The other lights and interior lighting stay off.

For daytime running light functionality, see the "Menu Items" paragraph in this section. If the function is deactivated, no lights are switched on when ring nut A is turned to ○ .

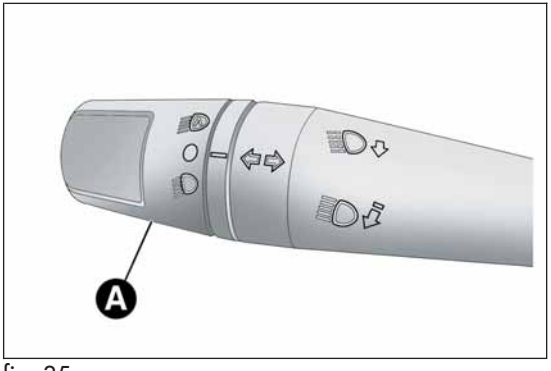

fig. 35 A0J0063

SIDE LIGHTS/DIPPED BEAM HEADLIGHTS

With the ignition key turned to MAR, turn ring nut A fig. 35 to .

The daytime running lights are switched off and the side lights and dipped headlights are switched on. The warning light switches on on the instrument panel.

PARKING LIGHTS

These lights can only be switched on with ignition key at STOP or removed, by moving ring nut A first to position and then to position .

When the parking lights are switched on, the number plate lights and the front and rear side lights switch on as well (the daytime running lights (DRLs) remain off however).

The warning light switches on on the instrument panel.

When the direction indicator stalk is activated the side for the lights (left or right) can be selected.

AUTOMATIC LIGHTING CONTROL (AUTOLIGHT) (Dusk sensor)

(for versions/markets, where provided)

This infrared LED sensor, combined with the rain sensor and located on the windscreen, detects the variations in outside brightness depending on the light sensitivity set with the Set-up Menu: the greater the sensitivity, the less external light is required to activate the exterior lights.

Activation

The dusk sensor activates when ring nut A fig. 35 is turned to . In this way the side lights and dipped headlights are activated automatically according to the external light level.

IMPORTANT The sensor is unable to detect the presence of fog. Therefore under these circumstances, these lights must be turned on manually.

When the lights are turned on by the sensor, the fog lights (for versions/markets, where provided) and the rear fog lights may be turned on.

When the lights are automatically switched off, the front and rear fog lights (if activated) are also switched off. The next time the lights are switched on automatically, the fog lights must be reactivated manually (if required).

With the sensor active, it is possible to flash the headlights but the main beam headlights cannot be switched on. If you need to turn these lights on, turn ring nut A to position and turn the dipped headlights on.

When the lights have been activated automatically and are then switched off by the sensor, the dipped beam headlights are switched off first, followed by the side lights a few seconds later.

If the sensor is activated but is malfunctioning, the side lights and dipped beam headlights are switched on irrespective of the outside light level and the sensor failure is indicated on the instrument panel display.

It is also possible to deactivate the sensor and switch on these lights if necessary.

MAIN BEAM HEADLIGHTS

To activate the main beam headlights, with ring nut A at ≣D , pull the stalk towards the steering wheel beyond the end of travel position.

The warning light ≣D switches on on the instrument panel.

When the stalk is pulled towards the steering wheel again, beyond the end of travel position, the main beam headlights deactivate, the dipped beam headlights reactivate and the warning light ≣D switches off.

FLASHING

To do this, pull the stalk towards the steering wheel (unstable position) regardless of the position of ring nut A.

The warning light ≣D switches on on the instrument panel.

DIRECTION INDICATORS

Bring the stalk into (stable) position:

❒ upwards: activates right direction indicator;

❒ downwards: activates left direction indicator.

Warning light ⇨ or ⇦ will flash in the instrument panel.

The indicators are switched off automatically when the steering wheel is straightened.

"Lane change" function

If you want to signal that you are changing lane, hold the left stalk in the unstable position for less than half a second. The direction indicator on the selected side flashes 3 times and then switches off automatically.

"FOLLOW ME HOME" DEVICE

This device allows you to illuminate the area in front of the car for a certain amount of time.

Activation

With the ignition key at STOP or removed, pull stalk A towards the steering wheel and move it within 2 minutes of the engine switching off.

At each single movement of the stalk, the lights will remain on for an extra 30 seconds up to a maximum of 210 seconds; then the lights are switched off automatically.

The ≣D 0≣ warning light on the instrument panel will light up (and the corresponding message will appear on the display) as long as the function is active.

The light comes on when the stalk is first moved and stays on until the function is automatically deactivated. Each movement of the stalk only increases the amount of time the lights stay on.

Deactivation

Keep stalk A pulled towards the steering wheel for more than 2 seconds.

EXTERNAL COURTESY LIGHTS

This function lights up the car and the space in front of it when the doors are unlocked.

Activation

When the car is parked and the doors are unlocked by pressing the button on the remote control (or the luggage compartment is unlocked by pressing), the dipped headlights, side lights and number plate lights are activated.

The lights remain lit for approximately 25 seconds unless the doors and boot are locked again with the remote control or the doors or boot are opened and reclosed. In these cases they go out after 5 seconds.

The exterior courtesy lights can be enabled/disabled using the Setup Menu (see the paragraph "Menu Items" in this chapter).

WINDOW CLEANING

WINDSCREEN WASHER/WIPER

The right stalk controls windscreen wiper/washer and rear window wiper/washer operation.

This operates only with the ignition key turned to MAR.

Ring nut A fig. 36 has the following positions:

O windscreen wipers off;

intermittent operation (low speed);

AUTO rain sensor activation (for versions/markets, where provided) (the windscreen wipers adapt the operating speed automatically to suit the intensity of the rain)

intermittent operation;

continuous slow operation;

continuous fast operation.

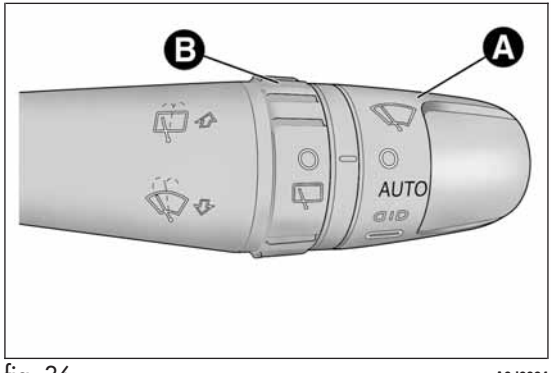

fig. 36 A0J0064

Move the stalk upwards (unstable position) to limit operation to the time for which the stalk is held in this position. When released, the stalk will return to its default position and the wiper will be automatically stopped.

Do not use the windscreen wiper to remove layers of snow or ice from the windscreen. In such conditions, the windscreen wiper may be subjected to excessive stress and the motor protection, which prevents operation for a few seconds, may intervene. If operation is not restored, even after turning the key and restarting the engine, contact Alfa Romeo Authorized Services.

Do not operate the windscreen wiper with the blades lifted from the windscreen.

"Smart washing" function

Pull the lever towards the steering wheel (unstable position) to operate the windscreen washer. Keep the stalk pulled for more than half a second, with just one movement, to operate windscreen washer/wiper jet at the same time.

The wiper stops working three strokes after the stalk is released. A further stroke after approximately 6 seconds completes the cycle.

RAIN SENSOR

(for versions/markets, where provided)

This is an infra-red LED sensor fitted on the car windscreen fig. 37.

It is able to detect the presence of rain and consequently manage windscreen wiping in accordance with the amount of water on the windscreen.

Activation

The sensor is activated when ring nut A fig. 36 is turned to “automatic” position (“AUTO” control): the windscreen wiper stroke frequency is thus adjusted in accordance with the amount of water on the windscreen.

This frequency can vary from no stroke (no rain - windscreen dry) up to the 2nd constant speed operation (heavy rain - windscreen wet).

The sensitivity of the rain sensor can be adjusted through the Set-up menu (see paragraph “Menu Items” in this section).

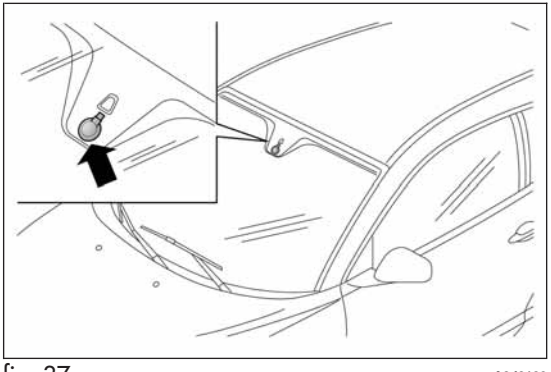

fig. 37 A0J0189

If the engine is stopped with the lever in "automatic" position, when it is next started no wiping cycle will take place even if it is raining. This prevents accidental activation of the rain sensor when the engine is started (e.g. when the windscreen is being washed by hand or the wipers are stuck to the windscreen when there is ice).

Carry out any of the following manoeuvres to restore automatic operation of the system:

❒ movement of left stalk from the automatic position to any other position and then back to automatic;

❒ sensitivity adjustment (by turning ring nut A to increase or decrease).

When the rain sensor is reactivated using any of the manoeuvres described above, reactivation is indicated by a single stroke of the windscreen wipers, regardless of the condition of the windscreen.

If the sensitivity is changed whilst the rain sensor is operating, a windscreen wiper stroke is carried out to confirm the change.

In the event of malfunction of the rain sensor whilst it is active, the windscreen wiper operates intermittently at a speed consistent with the sensitivity setting of the rain sensor, regardless of whether there is rain on the glass (sensor failure is indicated on the display).

The sensor continues to operate and it is possible to set the windscreen wiper to continuous mode (1st or 2nd speed). The failure indication remains for as long as the sensor is active.

REAR WINDOW WASHER/WIPER

(for versions/markets, where provided)

Activation

This operates only with the ignition key turned to MAR.

Turn ring nut B fig. 36 from position **O** to position to operate the rear window wiper as follows:

❒ in intermittent mode when the windscreen wiper is not operating;

❒ in synchronous mode (at half the speed of the windscreen wiper) when the windscreen wiper is operating;

❒ in continuous mode with reverse gear engaged and the control active.

With reverse gear engaged and windscreen wiper on, the rear window wiper is activated in continuous mode. Pushing the stalk towards the dashboard (unstable position) will activate the rear window washer jet.

Keep the stalk pushed for more than half a second to activate the rear window wiper as well. Releasing the stalk will activate the smart washing function, as described for the windscreen wiper.

CRUISE CONTROL
(for versions/markets, where provided)

GENERAL INFORMATION

This is an electronically controlled driving assistance device which allows driving at a chosen speed above 30 km/h on long stretches of dry, straight roads with few variations (e.g. motorways), without having to depress the accelerator pedal.

The use of this device on extra-urban roads with traffic is not therefore recommended. Do not use it in town.

TURNING THE DEVICE ON

Turn ring nut A fig. 38 to ON.

The device cannot be engaged in 1st or reverse gear: it is advisable to engage it in 5th gear or higher.

When travelling downhill with the device engaged, the car may slightly exceed the stored speed.

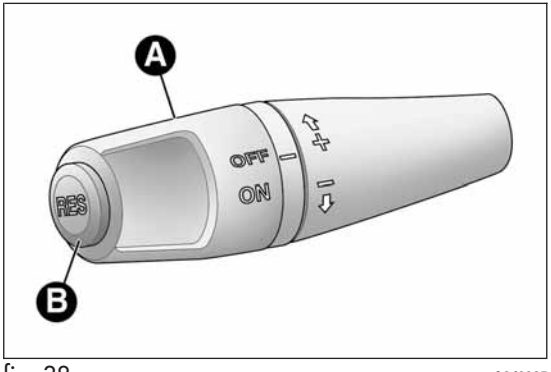

fig. 38 A0J0065

When the device is activated, the warning light switches on together with the relevant message on the display (for versions/markets, where provided).

STORING THE CAR SPEED

Proceed as follows:

❒ turn ring nut A fig. 38 to ON and press the accelerator to reach the required speed.

❒ move the stalk upwards (+) for at least 1 second, then release it: the car speed is now memorised and you can therefore release the accelerator.

If needed (when overtaking for instance), you can accelerate simply by pressing the accelerator; when you release the pedal, the car goes back to the speed set previously.

RESTORING THE MEMORISED SPEED

If the device has been disengaged by pressing the brake or clutch pedal, the stored speed can be reset as follows:

❒ accelerate gradually until a speed approaching the one stored is reached;

❒ engage the gear selected at the time that the speed was stored;

❒ press the RES button (B fig. 38).

INCREASING THE MEMORISED SPEED

Press the accelerator and store the new speed or move the lever upwards (+).

Each movement of the stalk corresponds to an increase in speed of about 1 km/h, while keeping the stalk held upwards will continuously increase the speed.

REDUCING THE MEMORISED SPEED

Deactivate the device and store the new speed or move the lever downwards (–) until the new speed is reached. It will then be stored automatically.

Each movement of the lever corresponds to a slight reduction in speed of about 1 km/h, while keeping the stalk held downwards will decrease the speed continuously.

TURNING THE DEVICE OFF

To disengage the device:

- turn ring nut A fig. 38 to OFF;

or

- switch the engine off;

or

- press the brake pedal, the clutch or the accelerator; in this last case the system is not effectively disengaged but the system gives priority to the acceleration request. The device still remains active, without the need to press the RES button to return to the previous conditions once acceleration is concluded.

Automatic deactivation

The device deactivates automatically in the following cases:

❒ if the ABS or ESC systems intervene;

❒ with the car speed below the set limit;

❒ in the event of system failure.

When travelling with the device active, never move the gear lever to neutral.

If operation is inadequate or the device is faulty, turn ring nut A fig. 38 to OFF and contact Alfa Romeo Authorized Services.

ROOF LIGHTS

FRONT ROOF LIGHT

Switch A fig. 39 switches the roof lights on/off.

A switch positions:

❒ central position (position 1): lights C and D switch on/off when the doors are opened/closed.

❒ pressed to the left (position 0): lights C and D are always switched off;

❒ pressed to the right (position 2): lights C and D are always switched on.

Lights switch on/off progressively.

switch B controls the spot light function.

B switch positions:

❒ central position (position 1): lights C and D are always switched off;

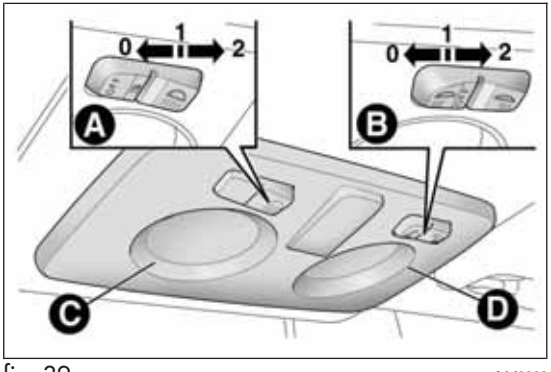

fig. 39 A0J0066

❒ pressed to the left (position 0): light C switches on;

❒ pressed to the right (position 2): light D switches on.

IMPORTANT Before getting out of the car, make sure that both switches are in the central position: when the doors are closed the lights will switch off to avoid draining the battery.

In any case, if the switch is left inadvertently in the permanently on position, the roof light will turn off automatically 15 minutes after the engine stopping.

ROOF LIGHT TIMING

On certain versions, to facilitate getting in/out of the car at night or in poorly-lit areas, two timed modes have been provided.

Timing when getting into the car

The roof lights switch on according to the following modes:

❒ for about 10 seconds when the doors are unlocked;

❒ for about 3 minutes when one of the doors is opened;

❒ for about 10 seconds when the doors are closed.

The timed period is interrupted when the ignition key is turned to MAR.

Timing when getting out of the car

After removing the key from the ignition switch, the roof lights switch on as follows:

❒ within 2 minutes of the engine being switched off for a period of around 10 seconds;

❒ for about 3 minutes when one of the doors is opened;

❒ for about 10 seconds when one of the doors is closed.

The timing stops automatically when the doors are locked.

COURTESY LIGHTS
(for versions/markets, where provided)

On some versions, courtesy lights are fitted behind the sun visors.

Press switch A fig. 40 to switch the light on/off.

PUDDLE LIGHTS
(for versions/markets, where provided)

These are located in the doors fig. 41. They switch on when the doors are opened, regardless of the position of the ignition key.

The lights switch off when the doors are closed.

LUGGAGE COMPARTMENT ROOF LIGHT

This is located on the left side of the luggage compartment fig. 42.

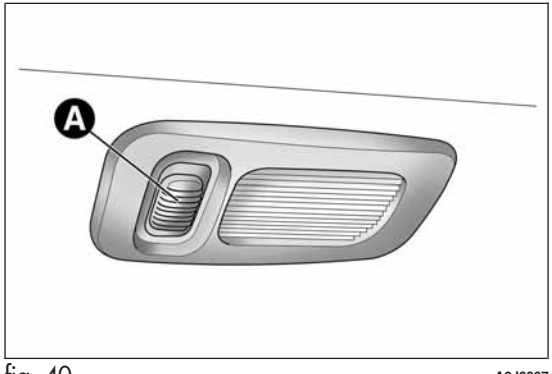

fig. 40 A0J0067

This switches on automatically when the luggage compartment is opened and switches off when it is closed.

The light switches on/off regardless of the ignition key position.

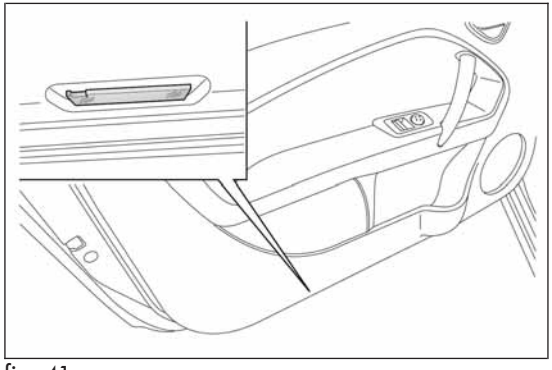

fig. 41 A0J0176

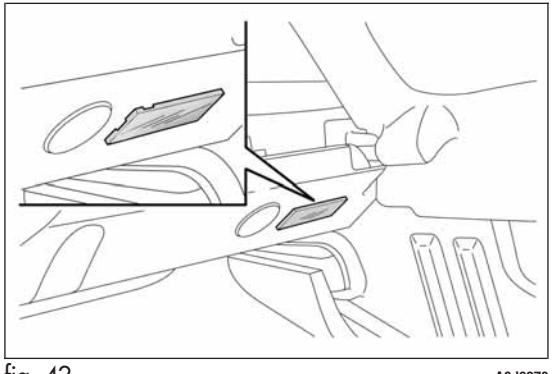

fig. 42 A0J0270

GLOVE COMPARTMENT LIGHT

This light comes on automatically when the glove compartment fig. 43 is opened and switches off when it is closed.

The light switches on/off regardless of the ignition key position.

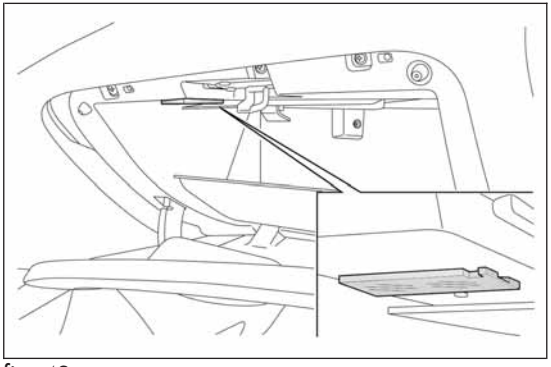

fig. 43 A0J0177

CONTROLS

HAZARD WARNING LIGHTS

Operation

Press switch A fig. 44 to switch on/off the lights.

Warning lights ⇦ and ⇨ on the panel are lit up when the lights are on.

The use of hazard lights is governed by the Highway Code of the country you are in. Comply with legal requirements.

Emergency braking

In the event of emergency braking the hazard warning lights are lit up automatically as well as the ⇦ and ⇨ warning lights in the panel.

The lights switch off automatically when emergency braking ceases.

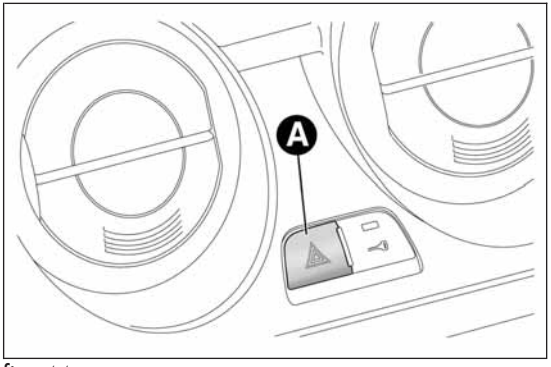

fig. 44 A0J0028

FOG LIGHTS
(for versions/markets, where provided)

Operation

Press the ≡D fig. 45 button to switch the lights on/off.

With the lights on, warning light ≡D in the instrument panel switches on.

REAR FOG LIGHT

Operation

Press the ◐≡ fig. 45 button to switch the light on/off.

The rear fog light switches on only when the dipped headlights are switched on. With the light on, the ◐≡ warning light in the instrument panel switches on.

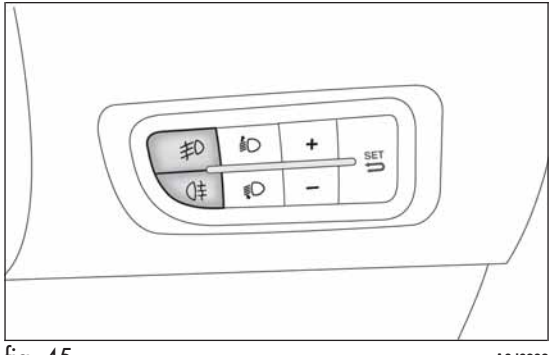

fig. 45 A0J0303

CENTRAL LOCKING

Operation

Press button A fig. 46 to lock all doors at the same time.

Locking takes place irrespective of the position of the ignition key.

FUEL CUT-OFF SYSTEM

Operation

This intervenes in the case of an impact causing:

- ❒ the interruption of the fuel supply with the engine consequently cutting out;
- ❒ the automatic unlocking of the doors;
- ❒ the interior lights being switched on.

The intervention of the system is indicated by a message shown on the display.

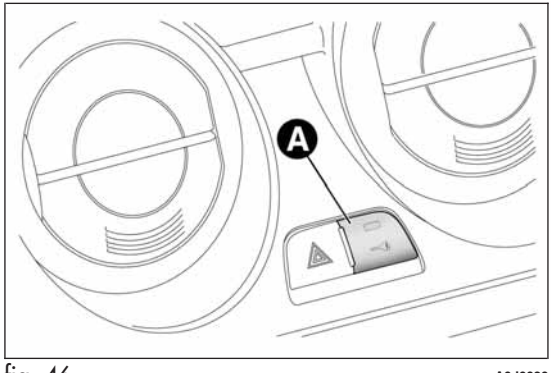

fig. 46 A0J0030

Carefully check the car for fuel leaks, for instance in the engine compartment, under the car or near the tank area.

After a collision, turn the ignition key to STOP to prevent the battery from running down.

To restore the correct operation of the car, proceed as follows:

❒ turn the ignition key to the MAR-ON position;

❒ activate the right direction indicator;

❒ deactivate the right direction indicator;

❒ activate the left direction indicator;

❒ deactivate the left direction indicator;

❒ activate the right direction indicator;

❒ deactivate the right direction indicator;

❒ activate the left direction indicator;

❒ deactivate the left direction indicator;

❒ turn the ignition key to the STOP position;

❒ turn the ignition key to the MAR-ON position.

If, after an impact, you smell fuel or notice leaks from the fuel system, do not reactivate the system to avoid the risk of fire.

INTERIOR FITTINGS

GLOVE COMPARTMENT

Operate handle A fig. 47 to open the compartment. When the compartment is opened, a courtesy light switches on.

The glove compartment features a document holder.

Do not travel with the glove compartment open: it could injure the passenger in the event of an accident.

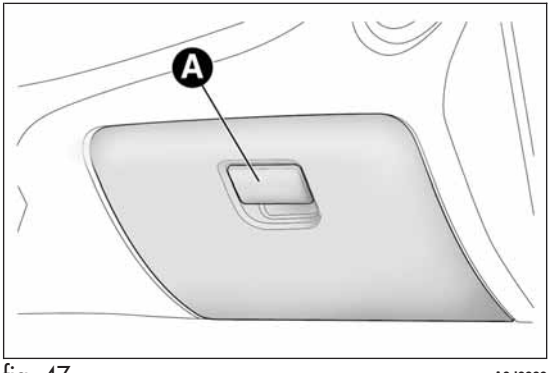

fig. 47 A0J0060

FRONT ARMREST
(for versions/markets, where provided)

This is located between the front seats. To bring it to its standard use position, push it downwards.

Press button A fig. 48 to raise the upper part of the armrest and access the compartment inside it. Press lever B to incline the armrest downwards relative to its standard use position.

POWER SOCKETS

These are located on the central tunnel A fig. 49 and on the left side of the luggage compartment B fig. 49 (for versions/markets, where provided). They only operate with the ignition key at MAR-ON.

If you request the smokers' kit, the socket on the central tunnel is replaced with a cigar lighter (see following paragraph).

IMPORTANT Do not connect devices with power higher than 180 W to the socket. Do not damage the socket by using unsuitable adaptors.

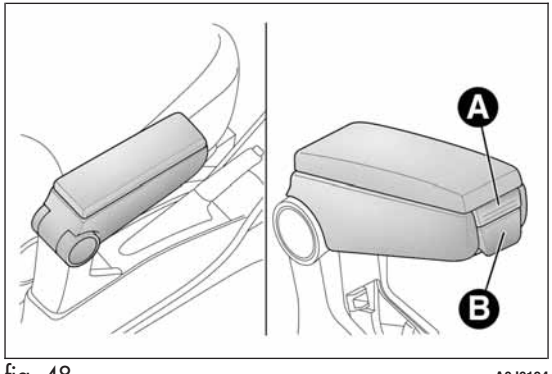

fig. 48 A0J0194

CIGAR LIGHTER
(for versions/markets, where provided)

This is located on the central tunnel. Press button A fig. 50 to activate the cigar lighter.

After a few seconds the button automatically returns to its initial position, and the cigarette lighter is ready for use.

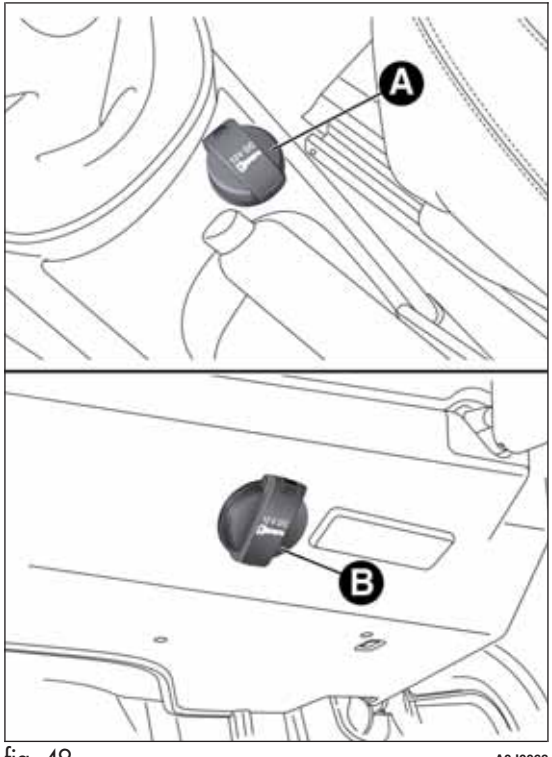

fig. 49 A0J0068

IMPORTANT Always check that the cigar lighter is switched off.

IMPORTANT Do not connect devices with power higher than 180 W to the socket. Do not damage the socket by using unsuitable adaptors.

The cigar lighter gets very hot. Handle it carefully and make sure that children don't use it: risk of fire and/or burns.

ASHTRAY

The ashtray is a removable spring-loaded plastic box that can be fitted into the cup/can holders on the central tunnel fig. 51

Do not use the ashtray as a waste paper basket: it may catch fire in contact with cigarette stubs.

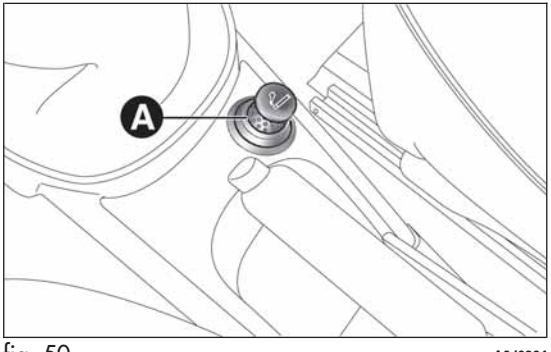

fig. 50 A0J0304

SUN VISORS

These are located at the sides of the interior rear view mirror. They can be adjusted forwards and sideways.

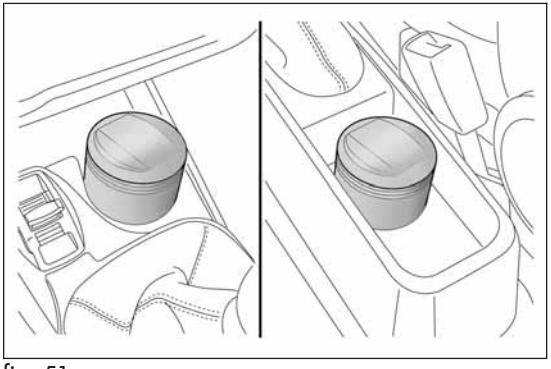

fig. 51 A0J0070

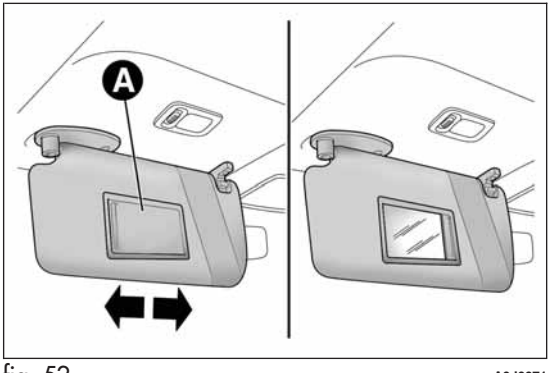

fig. 52 A0J0071

A courtesy mirror (for versions/markets, where provided) with roof light is fitted on the back of the visors. The light allows the mirror to be used even in poor visibility conditions.

Lift cover A fig. 52 to access the mirror.

IMPORTANT On both sides of the passenger side sun visor there is a label advising that it is compulsory to deactivate the airbag if a rearward facing child restraint system is fitted. Always comply with the instructions on the sun visor (see the "Front airbags" paragraph in chapter "Safety").

EXTINGUISHER

(for versions/markets, where provided)

This is located on the right side of the luggage compartment fig. 53.

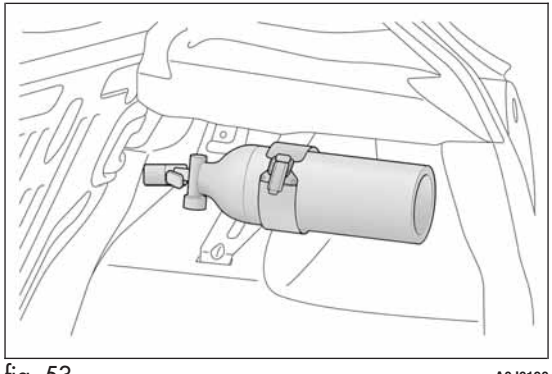

fig. 53 A0J0190

ELECTRIC SUN ROOF

(for versions/markets, where provided)

The extensively glazed sun roof comprises a moving glass panel and a sun blind.

The glazed panel, when closed, allows light from the outside to enter and makes it possible to see the outside from the passenger compartment.

OPERATION

The sun roof can be operated only with the ignition key turned to MAR. The controls A and B fig. 54 on the trim next to the front courtesy light operate the sun roof opening/closing functions.

Roof opening

Pressing button A fig. 54 permits two opening modes for the front glass panel.

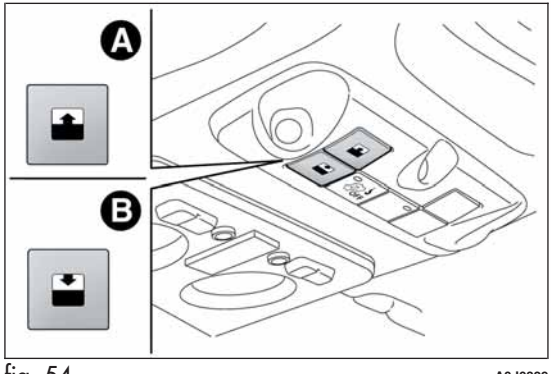

fig. 54 A0J0329

Automatic

If button A is held down, the front glass panel is raised from completely closed to spoiler position.

If the button is pressed again, the panel will start to slide backwards until it is completely open.

After the initial opening command, the glass panel can be stopped in intermediate positions by pressing the button again.

Manual

If button A is pressed briefly, the front glass panel moves from completely closed position and stops in the position where the button is released. In this case, the panel is opened by pressing the button.

This function makes it possible to place the front panel in intermediate positions in relation to those produced through automatic opening.

Do not open the sunroof if there is snow or ice on it: you may damage it.

The sun roof must stay closed if a transverse roof rack is fitted.

When leaving the vehicle, always remove the key from the ignition to avoid the risk of injury to those still inside the car due to accidental operation of the sunroof. Improper use of the roof can be dangerous. Before operation, always check that no-one is at risk of being injured by the moving sun roof or by objects getting caught and dragged by it.

Closing the sun roof

Pressing button B fig. 54 permits two closing modes for the front glass panel.

Automatic

With roof completely open, hold down button B: the front glass panel will move to spoiler position.

If the button is pressed again, the panel will start to slide forward until it is completely closed.

After the initial opening command, the glass panel can be stopped in intermediate positions by pressing the button again.

Manual

If button B is pressed briefly, the front glass panel moves from the completely open position and stops in the position where the button is released. In this case, the panel is closed by pressing the button.

This function makes it possible to place the front glass panel in intermediate positions in relation to those produced through automatic closing.

SUN BLIND

The brightness in the passenger compartment can be adjusted by using a sun blind.

Opening the blind: press button A fig. 55 to release the blind and then grip handle B in order to slide it backwards.

Closing the blind: grip handle B fig. 55 and slide the blind forwards, making sure that it clicks into place.

ROOF CLOSING SAFETY DEVICES (anti-pinch function)

The anti-pinch system, which conforms to Directive 2000/4/EC, is active during the horizontal and vertical closing stage of the panel after an obstacle is encountered (e.g. finger, hand):

❒ **during horizontal closing movement** it is active for the entire travel and, after an obstacle is encountered at the front of the glass panel, it reverses the movement;

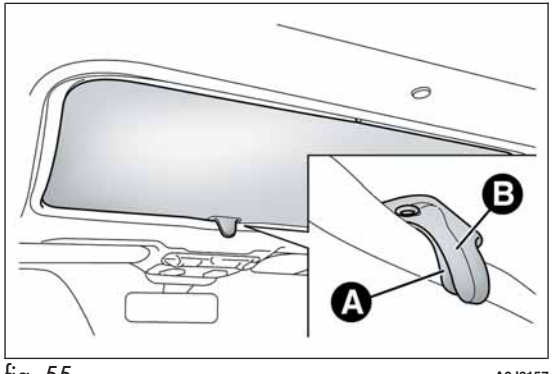

fig. 55 A0J0157

❒ **during vertical closing movement** it is active and, after an obstacle is encountered at the back of the glass panel, it reverses the movement until the spoiler position is reached.

The possibility of pinching from the inside of the passenger compartment in the side areas of the panel is avoided through the adoption of side guards that prevent access to risk areas.

IMPORTANT The anti-pinch system is deactivated by pressing button B continuously.

INITIALISATION PROCEDURE

After the battery has been disconnected or a fuse has blown, the operation of the sun roof must be initialised again.

Proceed as follows:

❒ press button B fig. 54 until the roof is completely closed. Release the button;

❒ press B button and keep it pressed for at least 10 seconds and/or until the glass panel clicks forwards. Release the button at this point;

❒ within 5 seconds of the previous operation, press button B and hold it down: the front glass panel will complete a full opening and closing cycle. Only release the button at the end of this cycle.

MAINTENANCE/EMERGENCY

In the event of emergency or maintenance, the roof can be moved manually when there is no power supply (opening/closing of the front glass panel) by carrying out the following operations:

❒ remove the protective cap A fig. 56 located on the internal lining, between the two sun blinds;

❒ take the Allen key B supplied, which is located in the on-board documentation container or in the tool container in the luggage compartment;

❒ introduce the key into housing C and turn it clockwise to open the roof or anticlockwise to close the roof.

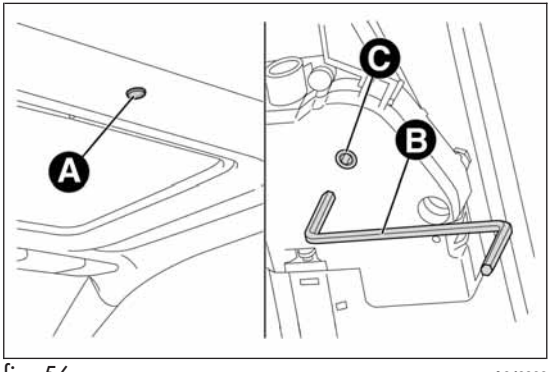

fig. 56 A0J0328

DOORS

DOOR CENTRAL LOCKING/ UNLOCKING

Locking from the outside

With the doors closed, press the 🔒 button on the key or turn the metal insert (located inside the key) in the driver side door lock.

The LED above fig. 57 button A switches on to indicate that the doors have been locked.

The door locking function is operated:

❒ with all the doors closed;

❒ with all the doors closed and the luggage compartment open.

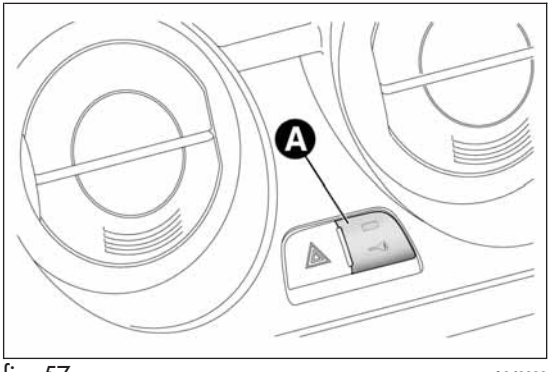

fig. 57 A0J0030

Door unlocking from the outside

Press the button on the key or turn the metal insert (located inside the key) in the driver side door lock.

Door locking/unlocking from the inside

Press fig. 57 button A. The button has an LED that indicates whether the car doors are locked or unlocked.

LED on: doors locked. Press button once again to centrally unlock all doors. The LED will switch off.

LED off: doors unlocked. Press the button again to centrally lock all doors. The doors will be locked only if all the doors are properly shut.

Once the doors have been locked via the remote control or the key pawl, it will no longer be possible to unlock them by pressing button .

IMPORTANT With the central locking system on, pull the door lever of one of the doors to open that door only (the LED on button A will stay on if it is the passenger door).

In the absence of electrical power supply (blown fuse, battery disconnected, etc.) it is still possible to lock the doors manually.

PASSENGER SIDE EMERGENCY FRONT DOOR LOCKING DEVICE

The front passenger side door has a device to lock it when there is no current.

To lock it, fit the metal insert of the ignition key in the housing A fig. 58 and move it upwards.

IMPORTANT If the battery is disconnected or the protection fuse blows, the door opening/closing mechanism must be initialised as follows:

- ❒ close all the doors;
- ❒ press button on the key or button for locking/unlocking the doors on the instrument panel;
- ❒ press button on the key or button for locking/unlocking the doors on the instrument panel.

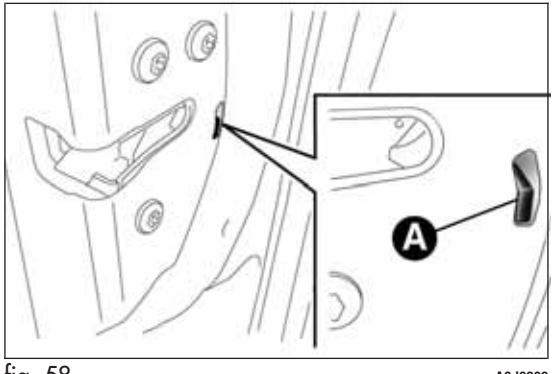

fig. 58 A0J0309

ELECTRIC WINDOWS

These are equipped with an automatic function to raise and lower the driver side front window.

CONTROLS

Driver side door fig. 59

❒ A - Front left window opening/closing;

❒ B - Front right window opening/closing;

Window opening

Push the buttons to open the desired window.

When one of the two buttons is pressed briefly, the window moves in "stages"; if the button is held down, "continuous automatic" operation is activated.

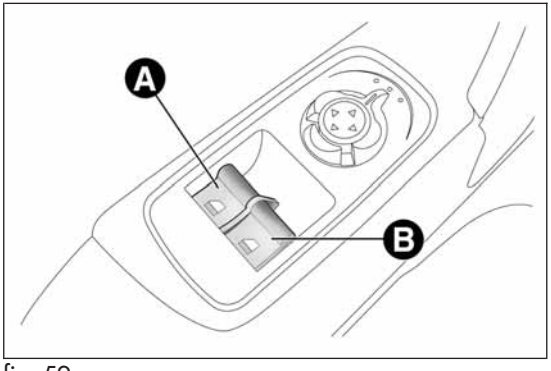

fig. 59 A0J0023

If the control button is pressed again, the window will stop in the desired position. If the button is held down for several seconds, the window raises or lowers automatically (only with ignition key in MAR position).

Window closing

Lift the buttons to close the desired window.

The window closing stage occurs following the same logics described for the opening stage.

Passenger side door

The passenger side door is equipped with a button that controls the opening/closing of the passenger side window.

Continuous automatic operation
(for versions/markets, where provided)

This is activated by pressing one of the two buttons for longer than half a second. The window will stop when it is fully opened or closed, or when the button is pressed again:

❒ *Driver side:* raising/lowering.

❒ *Passenger side:* only lowering.

❒ *Where anti-crush device is present:* raising/lowering driver side and passenger side.

Anti-crush safety device

(for versions/markets, where provided)

The car's anti-crush function is active as the windows are being raised.

This safety system detects the presence of an obstacle during the window closing travel and intervenes by stopping and reversing the window travel, depending on its position. This device is also useful if the windows are activated accidentally by children on board the car.

The anti-crush safety function is active both during the manual and the automatic operation of the window. When the anti-crush system is activated, the window travel is immediately interrupted and then reversed. The window cannot be operated in any way during this time.

IMPORTANT If the anti-crush protection intervenes 5 consecutive times within a minute or is faulty, the automatic closing operation of the window is inhibited, only allowing it in steps of half a second with the button released for the subsequent manoeuvre.

In order to restore the correct operation of the system, the relevant window must be lowered.

IMPORTANT With ignition key at STOP or removed, the electric windows remain active for about 3 minutes and are deactivated when a door is opened.

IMPORTANT With the anti-crush system, when the button on the remote control is pressed for longer than 2 seconds the windows will open, whilst if the button is pressed for longer than 2 seconds the windows will close.

The system conforms to the 2000/4/EC standard concerning the safety of passengers leaning out of the passenger compartment.

Incorrect use of the electric windows may be dangerous. Before and during operation, always check that no passenger is at risk of being injured directly by the moving window or by objects getting caught in or dragged by the window. When leaving the car, always remove the key from the ignition to prevent accidental operation of the electric windows from being a hazard for those still on board.

Electric window system initialisation

The system must be re-initialised after disconnecting the battery or if the relevant protection fuse is blown.

Initialisation procedure:

❒ fully close the window to initialise with manual operation;

❒ after the window has reached the upper end of travel, hold down the closing control for at least 1 second.

For versions/markets where provided, after a break in power supply for the control units (battery replaced or disconnected or protective fuses for the electric window control units replaced), the automatic operation of the windows must be restored.

The restoration procedure must be performed as described below with the doors closed:

❒ completely open the driver's door window, holding the operating button down for at least three seconds after the (lower) end of travel position;

❒ completely raise the driver side window and hold the button down for at least 3 seconds once the (upper) end of travel position has been reached;

❒ proceed in the same way as described in points 1 and 2 for the passenger side door;

❒ make sure that the initialisation is correct by checking that the windows work automatically.

IMPORTANT With the central locking on, pulling the internal opening lever for one of the doors switches the locking off for all the doors. In the absence of electrical power supply (blown fuse, battery disconnected, etc.) it is still possible to lock the doors manually. In this case, the automatic lowering function of the windows is not available. Press the window towards the inside of the car (see fig. 60) to open or close the door with the window raised to ease the passage of the window into the moulding.

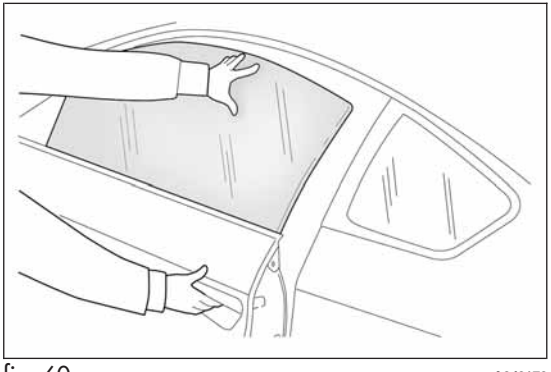

fig. 60 A0J0170

LUGGAGE COMPARTMENT

The luggage compartment is unlocked electrically and cannot be unlocked when the car is in motion.

OPENING

When unlocked, the boot can be opened from outside the car by pressing the electric logo fig. 61 until a click is heard which indicates unlocking or by pressing the button on the remote control.

The direction indicators will flash twice and an internal light will switch on when the luggage compartment is opened: the light switches off automatically when the luggage compartment is closed. The light switches off automatically after a few minutes if the luggage compartment is left open.

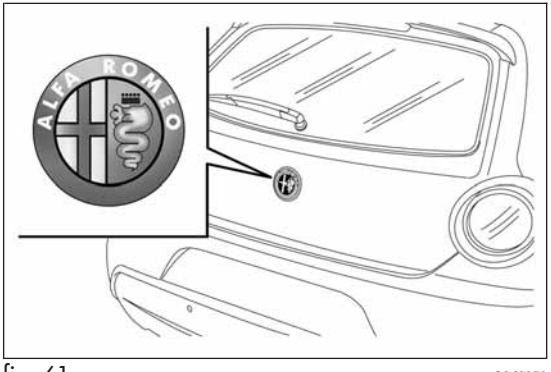

fig. 61 A0J0058

Emergency opening from the inside

Proceed as follows:

❒ remove the rear head restraints and completely fold back the seats (see the paragraph "Expanding the luggage compartment");

❒ push lever A fig. 62.

CLOSING

Lower the tailgate, pressing near the lock until you hear it click into place.

Pull the tab A fig. 63 and lower the tailgate, pressing next to the lock until it clicks.

IMPORTANT Before closing the luggage compartment make sure that you have the keys since the luggage compartment is automatically locked.

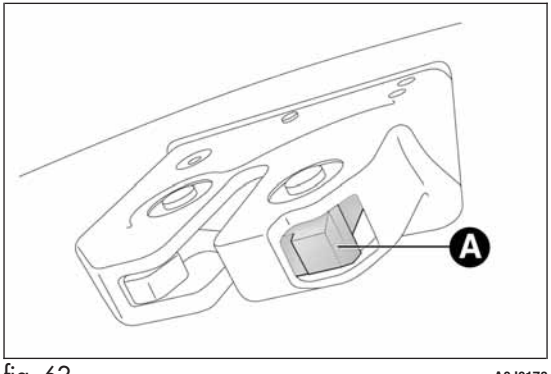

fig. 62 A0J0178

LUGGAGE COMPARTMENT INITIALISATION

IMPORTANT If the battery is disconnected or the protection fuse blows, the luggage compartment opening/closing mechanism must be initialised as follows:

❒ close all the doors and the luggage compartment;

❒ Press the 🔒 button on the remote control;

❒ Press the 🔓 button on the remote control.

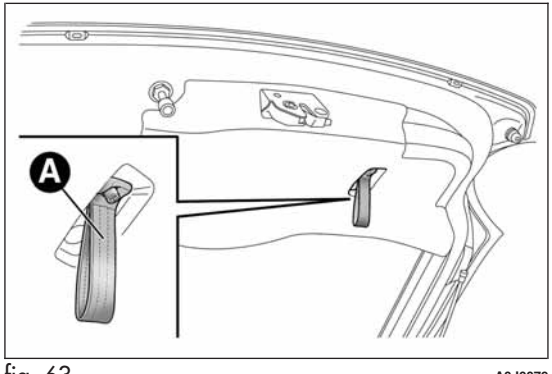

fig. 63 A0J0079

EXTENDING THE LUGGAGE COMPARTMENT

The luggage compartment can be partially (1/3 or 2/3) or totally extended by splitting the rear seat. See the descriptions in "Removing the parcel shelf" and "Folding back the seats" paragraphs for how to expand the luggage compartment.

Removing the parcel shelf

Proceed as follows:

❒ free the ends of the two parcel shelf B mounting links A fig. 64 by removing the eyelets C from the mounting pins;

❒ free the pins A fig. 65 on the outside of the shelf from the housings B in the side mountings, then remove the parcel shelf;

❒ after removal, the parcel shelf can be loaded sideways into the luggage compartment or placed between the front seat backrests and the folded-back rear seat cushions (with the luggage compartment completely expanded).

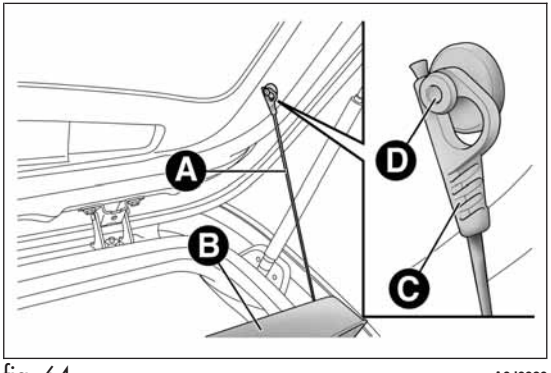

fig. 64 A0J0080

Folding the seats

Proceed as follows:

❒ raise the head restraints to the maximum height, press both the buttons A fig. 66 to the side of the two supports, then remove the head restraints by sliding them upwards;

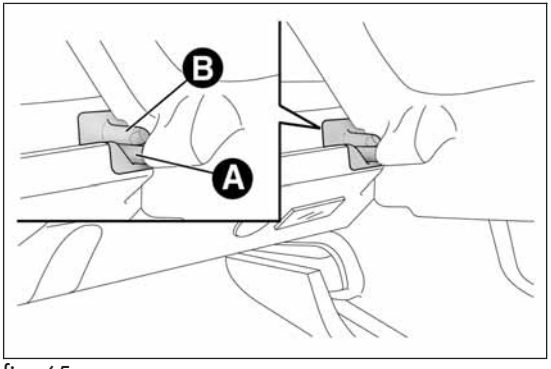

fig. 65 A0J0081

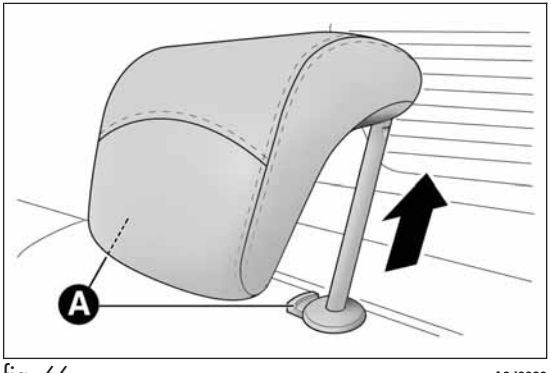

fig. 66 A0J0083

❒ move the seat belts to the side, making sure that they are correctly extended and not twisted;

❒ lift the backrest retaining levers A fig. 67 and fold the desired cushion forwards (a red band indicates that lever A is raised).

Repositioning the rear seat

Move the seat belts to the side making sure that they are correctly extended and not twisted.

Raise the previously folded backrest until you hear the click of the locking mechanism, visually checking that the red band on lever A fig. 67 has disappeared. The red band indicates that the backrest is not secured.

Finally, reposition the head restraints, inserting them into their housings.

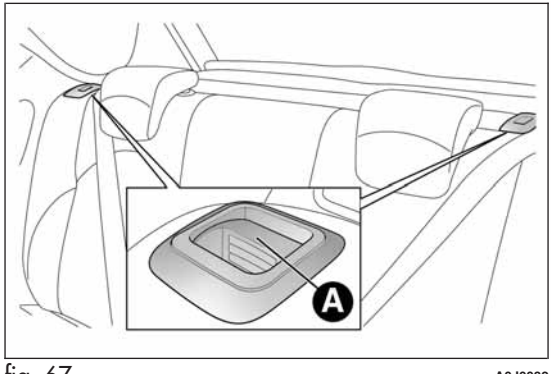

fig. 67 A0J0082

BONNET

OPENING

Proceed as follows:

❒ pull lever A fig. 68 in the direction indicated by the arrow;

❒ pull lever B in the direction indicated by the arrow;

❒ lift the bonnet and, at the same time, release bonnet stay C fig. 69 from its locking device. Then, insert the end in housing D, making sure that the stay is engaged in the smallest opening of the retaining clip.

IMPORTANT Before lifting up the bonnet make sure that the windscreen wipers are in the rest position and not operational.

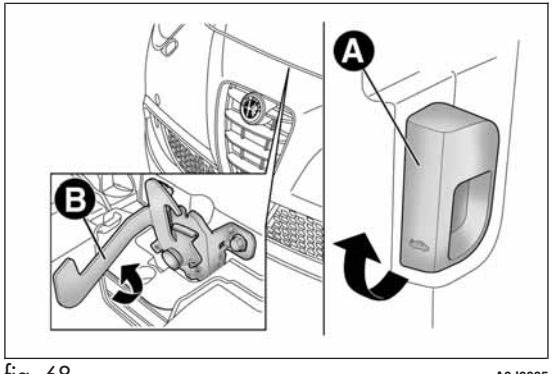

fig. 68 A0J0085

CLOSING

Proceed as follows:

❒ hold the bonnet up with one hand and with the other remove rod C fig. 69 from housing D and fit it back into its locking device;

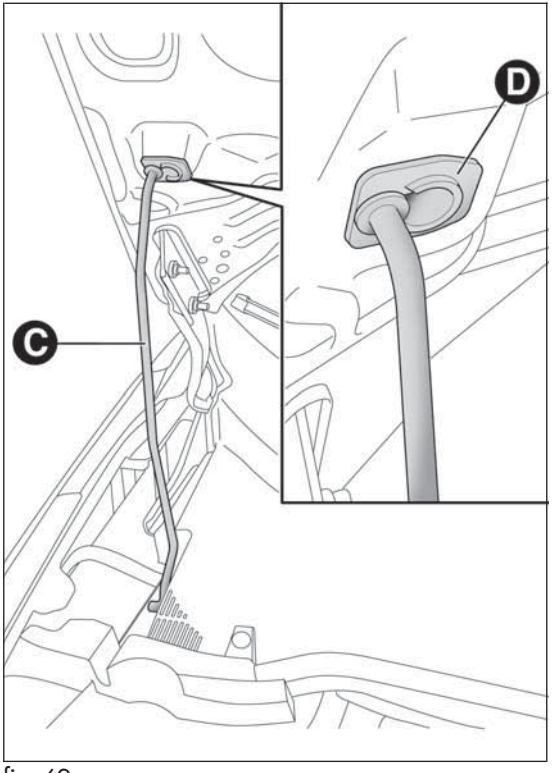

fig. 69 A0J0086

❒ lower the bonnet to about 20 cm from the engine compartment, then let it fall and check, by trying to raise it, that it is completely closed and not only attached in safety position. If it is not perfectly closed, open the bonnet and repeat the procedure. Do not simply press it.

IMPORTANT Always check that the bonnet is closed correctly to avoid it opening while the car is travelling.

For versions/markets where provided, the following plate is applied inside the engine compartment fig. 70:

For safety reasons, the bonnet must always be properly closed while driving. Make sure that the bonnet is perfectly closed and that the lock is engaged. If you discover during travel that the lock is not fully engaged, stop immediately and close the bonnet in the correct manner.

Perform these operations only when the car is stationary.

The bonnet may drop suddenly if the supporting rod is not positioned correctly.

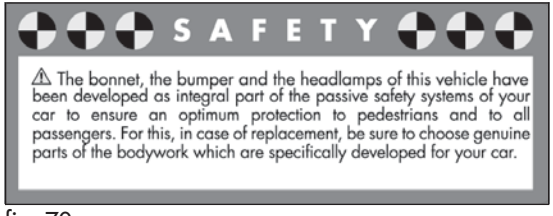

fig. 70 A0J1520

ROOF RACK/SKI RACK

To fit the roof rack/ski rack, raise the dedicated tabs A fig. 71 using the screwdriver provided to access the fixing housings B.

Lineaccessori Alfa Romeo includes a dedicated roof rack/ski rack for this car.

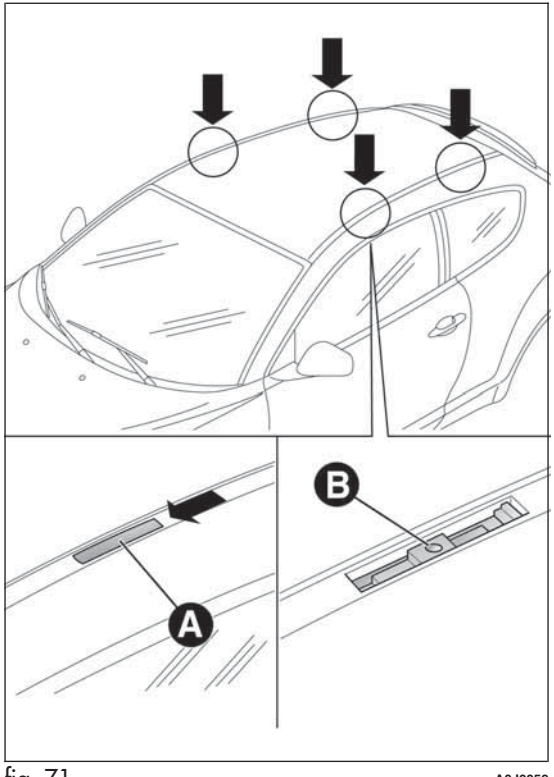

fig. 71 A0J0059

IMPORTANT Take the greatest possible care in following the instructions on the bar kit to the letter.

After travelling for a short distance, check that the fixing screws for the attachments are correctly tightened.

Never exceed the maximum permitted loads (see chapter "Technical specifications").

Evenly distribute the load and take into account, when driving, the increased effect of side wind on the car.

Fully comply with the regulations in force concerning maximum clearance.

HEADLIGHTS

LIGHT BEAM DIRECTION

The correct orientation of the headlights is important for the driver's comfort and safety as well as for all other road users. This is also covered by a specific rule of the highway code.

The headlights must be correctly aligned to ensure the best visibility conditions for yourself and others when driving with lights on. To check and, if necessary, adjust, contact Alfa Romeo Authorized Services.

HEADLIGHT ALIGNMENT CORRECTOR

This device works with the ignition key in the MAR position and the dipped headlights on.

Headlight alignment adjustment

To adjust, press the and fig. 72 fig. 73 buttons. The adjustment position is shown on the display.

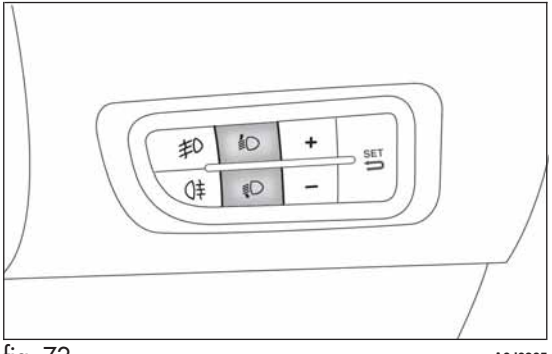

fig. 72 A0J0305

Position 0 : one or two occupants in the front seats.
Position 1 : 4 people.
Position 2 : 4 people + load in luggage compartment.
Position 3 : driver + maximum permitted load stowed in the luggage compartment.

IMPORTANT Check the alignment every time that the load carried changes.

FOG LIGHT ALIGNMENT

(for versions/markets, where provided)

To check and, if necessary, adjust, contact Alfa Romeo Authorized Services.

ADJUSTING THE HEADLIGHTS ABROAD

The dipped headlights are aligned to comply with the regulations of the country of purchase. When travelling in countries with opposite driving direction, to avoid dazzling the drivers on the other side of the road, you need to cover areas of the headlight according to the Highway code of the country you are travelling in.

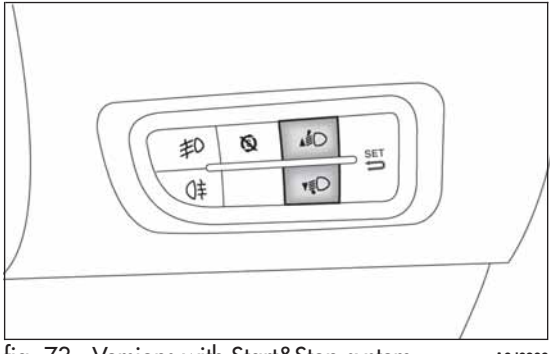

fig. 73 - Versions with Start&Stop system A0J0306

ABS SYSTEM

The car is fitted with an ABS braking system, which prevents the wheels from locking when braking, makes the most of road grip and gives the best control when performing emergency braking under difficult road conditions.

The EBD system (Electronic Braking Force Distribution) completes the system allowing the brake force to be distributed between the front and rear wheels.

IMPORTANT To obtain the maximum efficiency of the braking system, a bedding-in period of about 500 km is needed: during this period it is better to avoid sharp, repeated and prolonged braking.

SYSTEM INTERVENTION

It can be detected because the brake pedal pulsates slightly and the system gets noisier: it means that the car speed should be altered to suit the type of road surface.

MECHANICAL BRAKE ASSIST (emergency braking assistance)

(for versions/markets, where provided)

This system, which cannot be deactivated, recognises emergency braking conditions (according to the brake pedal operation speed) and provides an additional hydraulic braking pressure to support that provided by the driver. This allows faster and more powerful operation of the braking system.

IMPORTANT When the Mechanical Brake Assist intervenes, noises may be heard from the system. This is normal. In any case, while braking keep the brake pedal firmly depressed.

If the ABS system intervenes, this indicates that the traction of the tyres on the road is nearing its limit. Slow down to a speed compatible with the available traction.

The ABS gets the most from the available grip, but it cannot improve it; you should therefore take every care when driving on slippery surfaces and not take unnecessary risks.

When the ABS cuts in and you feel the brake pedal pulsating, do not remove your foot, but keep the pedal pushed down; in doing so you, will stop in the shortest distance possible under the road conditions at the time.

ESC (Electronic Stability Control) SYSTEM

This is an electronic system that controls vehicle stability in the event of tyre grip loss, helping maintain directional control.

The system is capable of recognising potentially dangerous situations in terms of the stability and intervenes automatically on the brakes in a differentiated manner for the four wheels in order to provide a stabilising torque.

The ESC system also includes the following systems:

❒ Hill Holder

❒ ASR

❒ Brake Assist

❒ MSR

❒ CBC

❒ "ELECTRONIC Q2" ("E-Q2")

❒ DST

SYSTEM ACTIVATION

The ESC system switches on automatically when the engine is started and cannot be switched off.

SYSTEM INTERVENTION

It is signalled by the blinking of the warning light on the instrument panel, to inform the driver that the car is in critical stability and grip conditions.

HILL HOLDER SYSTEM

This system is an integral part of the ESC system and facilitates starting on slopes.

It is automatically activated in the following conditions:

❒ uphill: vehicle stationary on a road with a gradient higher than 5%, engine running, brake pedal pressed and gearbox in neutral or gear (other than reverse) engaged;

❒ downhill: vehicle stationary on a road with a gradient higher than 5%, engine running, brake pedal pressed and reverse gear engaged.

When setting off the ESC system control unit maintains the braking pressure at the wheels until the engine torque required for departure is reached or for approximately 2 seconds, allowing your right foot to be moved easily from the brake pedal to the accelerator.

If the vehicle has not departed after this time, the system will deactivate automatically by gradually releasing the brake force. A sound may be heard during this stage: this indicates that the vehicle is about to move off.

IMPORTANT The Hill Holder system is not a handbrake. Do not leave the vehicle without having engaged the handbrake, switched off the engine and engaged a gear.

ASR (AntiSlip Regulation) SYSTEM

It is an integral part of the ESC system. It automatically operates in the event of one or both drive wheels slipping, loss of grip on wet roads (aquaplaning) and acceleration on slippery, snowy or icy roads, etc.

Depending on the slipping conditions, two different control systems are activated:

- ❒ if the slipping involves both drive wheels, the ASR intervenes reducing the power transmitted by the engine;
- ❒ if the slipping only involves one of the drive wheels, the ASR intervenes automatically braking the wheel that is slipping.

For the ESC and ASR systems to function correctly, all four tyres must be the same brand and type, must be in excellent condition and, above all, must be of the prescribed type and size.

The ESC system operates even when the space-saver wheel is being used. Always remember that the space-saver wheel, being smaller than the original wheel, provides less grip.

The performance of the ESC and ASR systems must not encourage the driver to take unnecessary risks. Driving style must always be adapted to road conditions, visibility and traffic. The driver is, in any case, responsible for safe driving.

BRAKE ASSIST (emergency braking assistance)

The system, which cannot be turned off, recognises emergency braking (on the basis of the brake pedal operating speed) and speeding up the response of the braking system. The Brake Assist device is deactivated if there is a ESC system failure.

MSR (Motor Schleppmoment Regelung) SYSTEM

This system is an integral part of the ABS, that intervenes, if there is a sudden downshifting, restoring torque to the engine, thereby preventing excessive drive at the drive wheels which, especially in poor grip conditions, could lead to a loss in stability of the car.

CBC (Cornering Brake Control) SYSTEM

This function improves the distribution of the braking pressure at the four wheels (to fully exploit the grip available on the ground) when braking on bends if the ABS intervenes. This improves stopping distances and above all vehicle stability when cornering.

"ELECTRONIC Q2" SYSTEM ("E-Q2")

The "Electronic Q2" system uses the braking system to create an effect similar to a limited slip differential.

The front braking system, when accelerating around a curve, acts on the inside wheel to increase the drive to the outside wheel (increased load), dynamically and continuously distributing the torque between the front drive wheels according to driving and road conditions.

The system, combined with MacPherson front suspension, allows particularly effective and sports driving to be achieved.

DST SYSTEM (Dynamic Steering Torque)

This function integrates Dual Pinion active steering into the operation of ESC. For particular manoeuvres, the ESC system controls the steering to actuate a steering torque and assist the driver in the best possible way.

The system operates the brakes and steering in a coordinated manner to increase the suspension and safety level of the car as a whole. The steering provides additional torque on the steering wheel.

"Alfa DNA" SYSTEM (Car dynamic control system)

This device allows, using lever A fig. 74 (on the central tunnel), three car response modes to be selected according to driving style and road conditions:

❒ d = Dynamic (sports driving mode);

❒ n = Natural (mode for driving in normal conditions);

❒ a = All Weather (mode for driving in poor grip conditions, such as rain and snow).

The device also acts on the dynamic car control systems (engine, steering, VDC system, instrument panel).

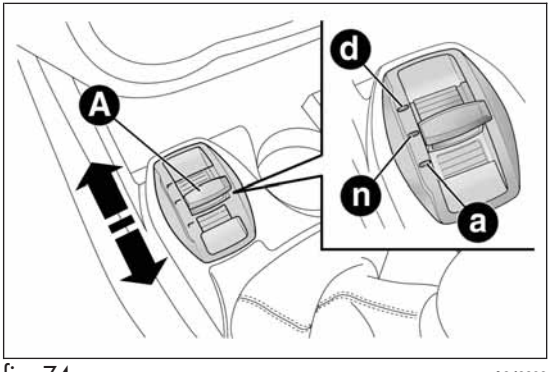

fig. 74 A0J0090

DRIVING MODES

Lever A is monostable type. In other words, it always remains in a central position.

The selected driving mode is indicated by the corresponding LED coming on in the panel and by an indication on the reconfigurable multifunction display, as illustrated below:

❒ ***Dynamic mode*** fig. 75 (display image available for versions/ markets, where provided)

❒ ***All Weather Mode*** fig. 76

"Natural" mode

When "Natural" mode is selected, no messages or symbols are shown on the display.

ESC and ASR systems: intervention thresholds aimed at comfort and safety in normal grip and driving conditions.

Steering wheel tuning: functions aimed at comfort in normal conditions of use.

DST: braking standard control coordinated with ABS/ESC. Standard control over lateral acceleration. Oversteer compensation: a slight pulse on the steering wheel encourages the driver to carry out the most appropriate manoeuvre.

Engine: standard response.

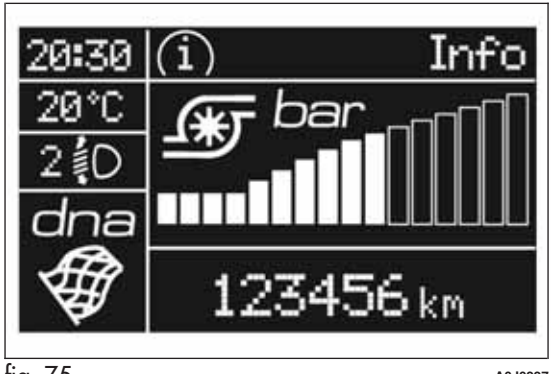

fig. 75 A0J0227

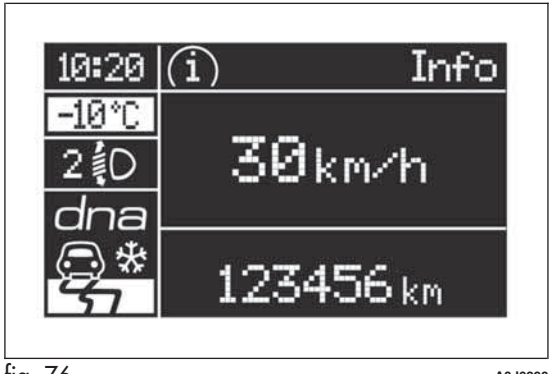

fig. 76 A0J0290

ENGAGEMENT/DISENGAGEMENT OF "Dynamic" MODE

Engagement

Move the lever A fig. 74 upwards (next to the letter "d") and hold in this position for 0.5 seconds until the corresponding LED lights up or the word "Dynamic" appears on the display (see fig. 77).

Upon release, lever A returns to the central position.

ESC and ASR: intervention thresholds that allow more enjoyable, sportier driving whilst guaranteeing stability of the vehicle.

Steering wheel tuning: uses the sports mode function.

DST: braking standard control coordinated with ABS/ESC. Standard control over lateral acceleration. Oversteering compensation depending on the ESC/ASR intervention thresholds: a slight movement on the steering wheel encourages the driver to carry out the most appropriate manoeuvre.

Engine: prompter response + Overboost to maximise torque (for versions/markets, where provided).

fig. 77 A0J1510

In the 1.4 Turbo MultiAir versions, selecting "Dynamic" operating mode activates the turbocharger supercharging function (overboost): depending on the accelerator pedal position and for a limited time, the engine management control unit allows the system to generate maximum pressure levels inside the turbocharger and the engine torque can reach higher values than usual.

This function is particularly useful whenever maximum performance is required for a short time (e.g. when overtaking).

IMPORTANT During acceleration, when the "Dynamic" function is used the steering may shudder, which is typical of a sports setting.

Disengagement

To deactivate "Dynamic" mode and return to "Natural", repeat the same movement of the lever within the same times. In this case, the LED corresponding to "Natural" mode will light up and the words "Natural on" will appear on the reconfigurable multifunction display (see fig. 78).

fig. 78 A0J1059

ENGAGEMENT/DISENGAGEMENT OF "All Weather" MODE

Engagement

Move lever A fig. 74 downwards (to the letter "a") and hold in this position for 0.5 seconds until the corresponding LED lights up or the word "All Weather" appears on the display (see fig. 79).

ESC and ASR systems: intervention thresholds aimed at guaranteeing the maximum safety in low grip driving conditions. It is recommended to activate the "All Weather" mode when fitting snow chains.

Steering wheel tuning: maximum comfort.

DST: higher braking control coordinated with ABS/ESC. Standard control over lateral acceleration. Oversteering compensation depending on the ESC/ASR intervention thresholds: a slight movement on the steering wheel encourages the driver to carry out the most appropriate manoeuvre.

Engine: standard response.

fig. 79 A0J1511

Disengagement

To deactivate "All Weather" mode and return to "Natural", carry out the same procedure described for "Dynamic" mode, but move lever A fig. 74 to "a".

IMPORTANT

- It is not possible to switch directly from "Dynamic" mode to "All Weather" mode and vice versa. You must always first go back to "Natural" mode and then select the other mode.
- The driving mode engaged before the engine stops is maintained when it is next started.
- In the event of system failure or a fault with lever A fig. 74, no driving modes can be selected. The display will show a warning message.

START&STOP SYSTEM

(for versions/markets, where provided)

The Start&Stop system automatically stops the engine each time the car is stationary and starts it again when the driver wants to move off.

In this way, the efficiency of the car is increased, by reducing consumption, emissions of harmful gases and noise pollution.

OPERATING MODES

Engine stopping mode

With the car stopped, the engine stops with gearbox in neutral and clutch pedal released.

Note The engine can only be stopped automatically over about 10 km/h, to prevent the engine from being repeatedly stopped when driving at walking pace.

The Ⓢ fig. 80 symbol appears on the display when the engine stops.

Restarting the engine

Press the clutch pedal to restart the engine.

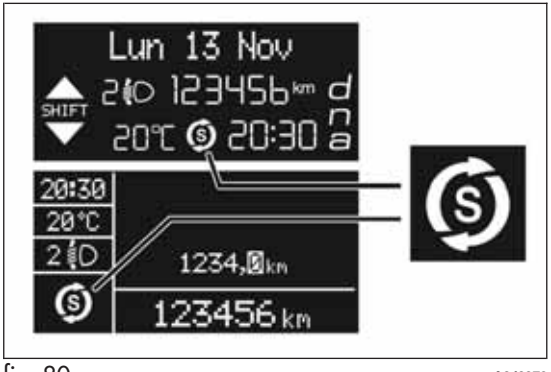

fig. 80 A0J0279

SYSTEM MANUAL ACTIVATION/ DEACTIVATION

To activate/deactivate manually the system, press the fig. 81 button on the trim next to the steering wheel.

Start&Stop system activation

A message and a symbol will be displayed when the Start&Stop system is activated.

Turning the Start&Stop off

❒ *Versions with multifunction display:* a message is displayed when the Start&Stop system is deactivated.

❒ *Versions with reconfigurable multifunction display:* the symbol is displayed + a message when the Start&Stop system is deactivated.

When the system is deactivated, the warning light on the instrument panel switches on. For versions/markets where provided, a message and symbol are also displayed in the event of system activation/ deactivation.

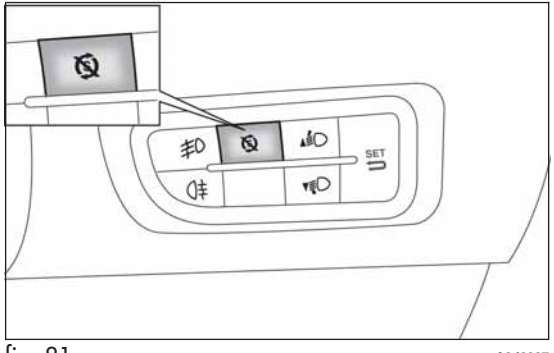

fig. 81 A0J0307

ENGINE STOPPING FAILURE CONDITIONS

When the system is operating, due to comfort, emission control and safety reasons, the engine does not stop in some conditions, among which:

❒ engine still cold;

❒ especially cold outside temperature;

❒ battery not sufficiently charged;

❒ particulate filter regeneration (DPF) in progress (diesel engines only);

❒ driver's door not shut;

❒ driver's seat belt not fastened;

❒ reverse gear engaged (for example, for parking manoeuvres);

❒ for versions equipped with dual zone automatic climate control (for versions/markets, where provided), if an adequate level of thermal comfort has not been reached or with MAX-DEF function activation;

❒ during the first period of use, to initialise the system.

If the climate comfort is to be favoured, the Start&Stop system can be deactivated, for a continuous operation of the climate control system.

ENGINE RESTARTING CONDITIONS

Due to comfort, emission control and safety reasons, the engine can restart automatically without any action by the driver, under special conditions, such as:

❒ battery not sufficiently charged;

❒ reduced braking system vacuum (e.g. if the brake pedal is pressed repeatedly);

❒ car moving (e.g. when driving on roads with a gradient);

❒ engine stopping by Start&Stop system for over 3 minutes;

❒ for versions equipped with dual zone automatic climate control system (for versions/markets, where provided), if an adequate level of thermal comfort has not been reached or MAX-DEF function activation.

With gear engaged, automatic engine restarting is possible only by fully depressing the clutch pedal. The driver is informed by the displaying of a message on the display and - for versions/markets, where provided - by the flashing of the symbol Ⓢ.

Notes

If the clutch is not pressed, about 3 minutes after the engine stops, the engine can be restarted only using the ignition key.

In cases when the engine stops and this is not desired, due for example to the clutch pedal being released sharply with a gear engaged, if the Start&Stop system is activated, the engine can be restarted by fully depressing the clutch pedal or by placing the gear lever in neutral.

SAFETY FUNCTIONS

When the engine is stopped by the Start&Stop system, if the driver releases his/her seat belt and opens the driver's or passenger's door, the engine can be restarted only using the ignition key.

The driver is informed by a buzzer and by the flashing of the symbol Ⓢ on the display; on some versions, a message is displayed as well.

"ENERGY SAVING" FUNCTION

(for versions/markets, where provided)

If, following automatic engine restarting, the driver does not carry out any action on the car for over 3 minutes, the Start&Stop system stops the engine once and for all, to prevent fuel consumption. In these cases, the engine can be restarted only using the ignition key.

NOTE In any case, it is possible to keep the engine running by deactivating the Start&Stop system.

IRREGULAR OPERATION

In the event of malfunction, the Start&Stop system is deactivated.

The driver is informed of the fault by the ⚠ warning light switching on in the instrument panel and, for versions/markets where provided, a message and symbol on the display.

In this case, contact Alfa Romeo Authorized Services.

CAR INACTIVITY

In the event of car inactivity (or if the battery is replaced), special attention must be paid to the disconnection of the battery power supply.

The procedure must be carried out as follows: press button A fig. 82 to detach connector B from battery status monitoring sensor C (this is located on the negative pole of the battery itself).

⚠ ***In case of battery replacement, always contact Alfa Romeo Authorized Services. Replace the battery with one of the same type (HEAVY DUTY) and with the same specifications.***

IMPORTANT After turning the ignition key to STOP, wait at least 1 minute before disconnecting the electrical supply to the battery.

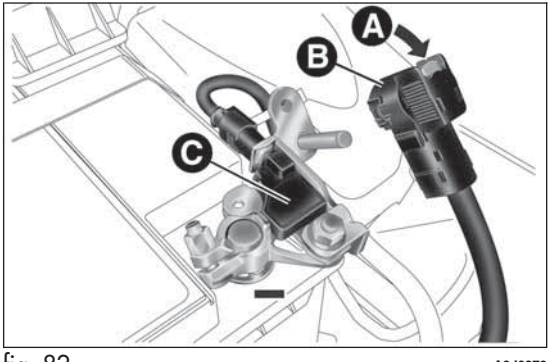

fig. 82 A0J0379

JUMP STARTING

When jump starting, never connect the negative lead (–) of the auxiliary battery to the negative pole A fig. 83 of the car battery, but rather to an engine/gearbox earth point.

Before opening the bonnet, make sure the engine is off and the ignition key is in the STOP position. Follow the indications on the plate underneath the bonnet fig. 84. It is advisable to extract the key when there are other people in the car. Leave the car only after having removed the ignition key or having turned it to STOP. During refuelling, make sure that the engine is off and that the ignition key is in the STOP position.

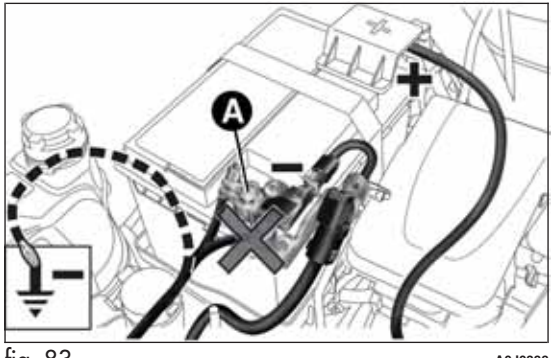

fig. 83 A0J0388

DYNAMIC SUSPENSION (active shock absorber system)

(for versions/markets, where provided)

This system interacts with the "Alfa DNA" system (see paragraph "Alfa DNA").

The "Alfa DNA" system lever allows you to choose three different driving settings depending on the route type and on the road surface:

- ❒ d = Dynamic (sports driving mode);
- ❒ n = Natural (mode for driving in normal conditions);
- ❒ a = All Weather (mode for driving in poor grip conditions, such as rain and snow).

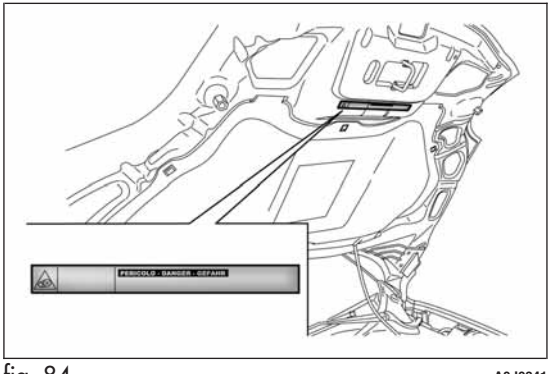

fig. 84 A0J0341

In “Natural” and “All Weather” operating mode, the active shock absorbers adjust the car suspension to suit the route type and the driving stresses, thus considerably improving driving comfort in particular on rough terrain.

The "Dynamic" operating mode produces a sports driving setting characterised by more responsive acceleration and greater effort on the steering wheel to give a sporty feeling. The shock absorber damping action is also adjusted and divided, to guarantee higher precision and reactivity of the car, while maintaining a good comfort level.

The car is more precise when entering bends and quicker in changing direction.

EOBD SYSTEM (European On Board Diagnosis)

(for versions/markets, where provided)

The aim of the EOBD system (European On Board Diagnosis) is to:

❒ monitor the system efficiency;

❒ indicate an increase in emissions;

❒ indicate the need to replace damaged components.

The car also has a diagnostic connector that can be interfaced with appropriate tools, which makes it possible to read the error codes stored in the electronic control units together with a series of specific parameters for engine operation and diagnosis. This check can also be carried out by the traffic police.

IMPORTANT After eliminating a fault, to check the system completely, Alfa Romeo Authorised Services are obliged to run tests and, if necessary, road tests which may also call for a long journey.

ELECTRIC POWER STEERING

This only operates with the key turned to MAR-ON and the engine started. Power steering allows the force required at the steering wheel to be adapted to driving conditions.

The different power assistance modes can be selected via the "d,n,a" positions of the "Alfa DNA System" lever (see "Alfa DNA System" paragraph).

It is absolutely forbidden to carry out any after-market operation involving steering system or steering column modifications (e.g.: installation of anti-theft device) that could badly affect performance and safety, invalidate the warranty and also result in non-compliance of the car with type-approval requirements.

Before performing any maintenance operations, always turn off the engine and remove the key from the ignition to lock the steering column, especially when the car's wheels are not touching the ground.

INSTALLING ELECTRICAL/ ELECTRONIC DEVICES

Electrical and electronic devices installed after buying the car in the context of after-sales service must carry the following label: fig. 85

Fiat Group Automobiles S.p.A. authorises the installation of transceiver devices on condition that such installations are carried out in a workmanlike fashion, following the manufacturer's instructions, at a specialised centre.

IMPORTANT Traffic police may not allow the car on the road if devices have been installed which modify the features of the car. This may also cause invalidation of warranty in relation to faults caused by the change either directly or indirectly related to it.

Fiat Group Automobiles S.p.A. shall not be liable for damage caused by the installation of accessories either not supplied or recommended by Fiat Group Automobiles S.p.A. and/or not installed in compliance with the provided instructions.

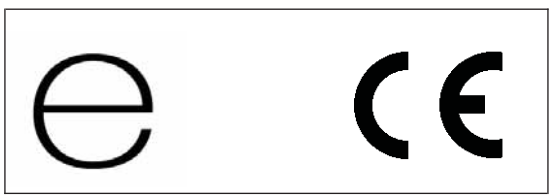

fig. 85 DISPOSITIVI-ELETTRONICI

RADIO TRANSMITTERS AND MOBILE PHONES

Radio transmitter equipment (vehicle mobile phones, CB radios, amateur radio, etc.) cannot be used inside the car unless a separate aerial is mounted externally.

IMPORTANT The use of similar devices inside the passenger compartment (without separate aerial) produces radio-frequency electromagnetic fields which, amplified by the resonance effects inside the passenger compartment, may cause electrical systems equipping the car to malfunction. This could compromise safety in addition to constituting a potential hazard for the passengers.

In addition, transmission and reception of these devices may be affected by the shielding effect of the car body.

As far as the use of EC-approved mobile phones is concerned (GSM, GPRS, UMTS), follow the usage instructions provided by the mobile phone manufacturer.

PARKING SENSORS

(for versions/markets, where provided)

The parking sensors are located in the car's rear bumper fig. 86 and their function is to inform the driver, through an intermittent acoustic signal, about the presence of obstacles behind the car.

ACTIVATION

The sensors are activated by engaging reverse gear. As the obstacle behind the vehicle gets closer to the car, the acoustic signal becomes more frequent.

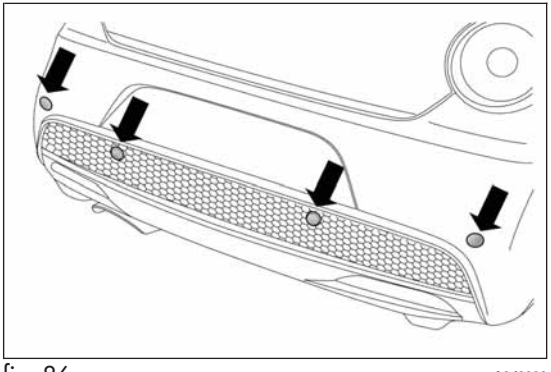

fig. 86 A0J0088

INDICATIONS ON DISPLAY

(for versions/markets, where provided)

When the sensor is activated, the "Reconfigurable multifunction display" (for versions/markets, where provided) shows the screen illustrated in fig. 87.

Obstacle presence and distance information is therefore provided both by the buzzer and the instrument panel display.

If there are several obstacles the closest one is indicated.

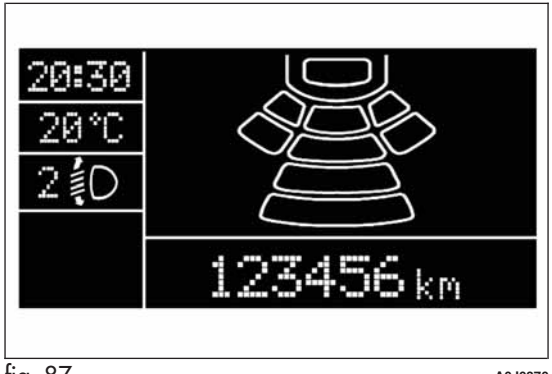

fig. 87 A0J0370

ACOUSTIC SIGNAL

When reverse gear is engaged an acoustic signal is automatically activated if there is an obstacle within the range of operation.

The acoustic signal:

❒ increases as the distance between the car and the obstacle decreases;

❒ becomes continuous when the distance between the car and the obstacle is less than 30 cm and stops immediately if the distance increases;

❒ remains constant if the distance remains unchanged; if this situation concerns the side sensors, the buzzer will stop after about 3 seconds to avoid, for example, warning indications in the event of manoeuvres along walls.

IMPORTANT The volume of the acoustic signal can be adjusted through the option "Warning volume" of the "Set-Up menu".

Detection distances

❒ Central operating range: 140 cm

❒ Side operating range: 60 cm

If several obstacles are detected by the sensors, only the nearest one is considered.

OPERATION WITH TRAILER

Parking sensor operation is deactivated automatically when the trailer electric cable plug is fitted into the car tow hook socket. The sensors are automatically enabled again when the trailer's cable plug is removed.

The sensor must be free of mud, dirt, snow or ice in order for the system to work. Be careful not to scratch or damage the sensors while cleaning them. Avoid using dry, rough or hard cloths. The sensors should be washed using clean water with the addition of car shampoo if necessary. When using special washing equipment such as high pressure jets or steam cleaning, clean the sensors very quickly keeping the jet more than 10 cm away.

When repainting the bumpers or touching up paint in the sensor area, contact Alfa Romeo Authorized Services only. Incorrect paint application could affect the operation of the parking sensors.

Parking manoeuvres however are always the driver's responsibility. When carrying out such manoeuvres, always ensure that the manoeuvring area is free of people (particularly children) and animals. The parking sensor is designed to assist drivers, who must still never allow their attention to lapse during potentially dangerous manoeuvres even if performed at low speed.

GENERAL WARNINGS

During parking manoeuvres, pay the utmost attention to any obstacles that could be located above or below the sensors.

Objects located near the rear of the car are not detected under certain circumstances and could therefore cause damage to the car or be damaged.

The following conditions may influence the performance of the parking sensor system:

- ❒ reduced sensor sensitivity and a reduction in the parking assistance system performance could be due to the presence on the surface of the sensor of: ice, snow, mud, thick paint
- ❒ the sensors may detect a non-existent obstacle (echo interference) due to mechanical interference, for example when washing the car, in rain (strong wind), hail;
- ❒ The signals sent by the sensors can also be altered by the presence of ultrasonic systems (e.g. pneumatic brake systems or pneumatic drills) near the vehicle.
- ❒ sensor performance can also be influenced by the position of the sensors. For example by a change in the ride setting (caused by the wear of the shock absorbers, suspension), overloading the vehicle and carrying out specific tuning operations that require the vehicle to be lowered;
- ❒ The detection of obstacles at the top part of the car may not be guaranteed because the system detects obstacles that could cause an impact with the car in the bottom part.

TPMS (Tyre Pressure Monitoring System)

(for versions/markets, where provided)

The car may be fitted with a tyre pressure monitoring system (TPMS), which informs the driver of the tyre inflation status via the "Check tyre pressure" and "Low tyre pressure" messages on the display.

This system comprises a radio frequency transmitter fitted to each wheel (on the wheel rim inside the tyre), which is able to send information on the tyre inflation pressure of each wheel to the control unit.

IMPORTANT INFORMATION ABOUT THE TPMS

The fault indications are not stored and will therefore not be displayed after the engine has been switched off and then on again.

If the fault conditions persist, the control unit will send the relative indications to the instrument panel only after the car has been in motion for a short time.

The presence of the TPMS does not permit the driver to neglect regular checks of the tyre pressure, including for the spare wheel.

Tyre pressure must be checked with tyres rested and cold. Should it become necessary for whatever reason to check pressure with warm tyres, do not reduce pressure even though it is higher than the prescribed value, but repeat the check when tyres are cold.

Should one or more wheels be fitted without sensors, the system will no longer be available and a warning message will be shown on the display, until 4 wheels with sensors are fitted again.

The TPMS cannot warn of sudden decreases in tyre pressure (for example when a tyre bursts). In this case, stop the car, braking with caution and avoiding abrupt steering.

Replacing standard tyres with winter tyres and vice versa requires TPMS system adjustment that must only be performed by Alfa Romeo Authorised Services.

Variations in outside temperature may cause tyre pressures to vary. The TPMS may temporarily indicate insufficient pressure. In this case, check the tyre pressure when cold and, if necessary, restore the inflation values.

When a tyre is removed, it is advisable to replace the rubber valve seal as well: contact Alfa Romeo Authorised Services. Tyre and rim fitting/removal operations require specific precautions; to avoid damaging or fitting the sensors incorrectly, tyre and wheel fitting/removal operations should only be carried out by specialised staff. Contact Alfa Romeo Authorised Services.

Intense radio-frequency interference may prevent the correct operation of the TPMS. This condition will be indicated by a message on the display. The message will disappear automatically as soon as the interference ceases to affect the system.

The tyre repair kit ("Fix&Go Automatic") provided with the car is compatible with the TPMS sensors; using sealants not equivalent with that in the original kit may adversely affect its operation. If sealants not equivalent with the original one are used, it is recommended to have the TPMS sensors checked by a qualified repair centre.

In order to use the system properly, refer to the following table when you have to change wheels/tyres:

Operation	Presence of sensor	Failure indication	Alfa Romeo Authorised Services intervention
–	–	YES	Contact Alfa Romeo Authorised Services
Wheel change with space-saver wheel	NO	YES	Repair the damaged wheel
Wheel change with winter tyres	NO	YES	Contact Alfa Romeo Authorised Services
Wheel change with winter tyres	YES	NO	–
Wheel change with others of a different size (*)	YES	NO	–
Switching wheels (front/rear)(**)	YES	NO	–

(*)Given as an alternative in the Owner Handbook and available from Lineaccessori Alfa Romeo.
(**)Not cross-swapped (tyres must stay on the same side).

REFUELLING THE CAR

Stop the engine before refuelling.

PETROL ENGINES

Only use unleaded petrol. The petrol octane rating (RON) must not be lower than 95. In order to prevent damage to the catalytic converter never introduce even the smallest amount of leaded petrol, even in the event of an emergency.

DIESEL ENGINES

Use only diesel fuel compliant with European specification EN590. The use of other products or mixtures may damage the engine beyond repair and consequently invalidate the warranty, due to the damage caused.

Operation at low temperatures

If the outside temperature is very low, the diesel thickens due to the formation of paraffin clots with consequent defective operation of the fuel supply system.

In order to avoid these problems, different types of diesel fuel are distributed according to the season: summer type, winter type and arctic type (cold/mountain areas). If refuelling with diesel fuel whose features are not suitable for the temperature of use, it is advisable to mix TUTELA DIESEL ART additive with the fuel, in the proportions shown on the container. Pour the additive into the tank before the fuel.

When using or parking the vehicle for a long time in the mountains or cold areas, it is advisable to refuel using locally available fuel. In this case, it is also advisable to keep the tank over 50% full.

FUEL TANK CAP

Opening

Open flap A fig. 88, pulling it outwards, hold cap B still, insert the ignition key in the lock and turn it anticlockwise. Then turn the cap anticlockwise and remove it.

The plug is provided with a loss prevention device C which secures it to the flap, so it cannot be lost. Attach the cap to device D during refuelling.

Closure

Fit the cap (complete with key) and turn it clockwise until it clicks once or more. Then turn the key clockwise and extract it, then close the flap.

The sealing may cause a slight pressure increase in the tank. A little breathing off, while slackening the cap is absolutely normal.

Do not place naked flames or lit cigarettes near to the fuel filler: fire risk. Also, keep your face away from this fuel inlet to avoid inhaling harmful fumes.

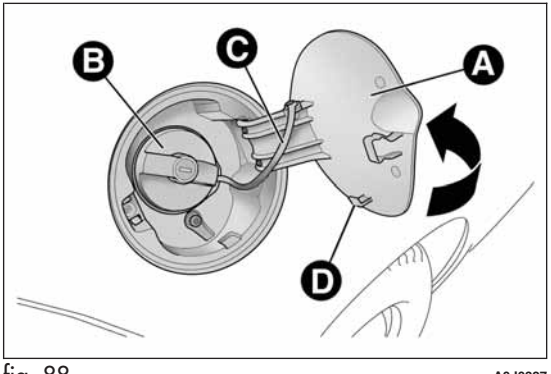

fig. 88 A0J0327

PROTECTING THE ENVIRONMENT

The following devices are used for reducing petrol fuel engine emissions: catalytic converter, oxygen sensors and evaporation control system

The following devices are used for reducing diesel fuel engine emissions: oxidising catalytic converter, exhaust gas recirculation system (EGR) and particulate filter (DPF).

DIESEL PARTICULATE FILTER (DPF)

(Diesel Particulate Filter)

(for versions/markets, where provided)

The Diesel Particulate Filter is a mechanical filter, integral to the exhaust system, that physically traps carbon particles present in the exhaust gases of diesel engines.

The diesel particulate filter is needed to eliminate almost all carbon particle emissions in compliance with current/future regulations and standards.

During standard use of the vehicle, the engine control unit records a set of data (e.g.: travel time, type of route, temperatures, etc.) and it will then calculate how much particulate has been trapped by the filter.

Since this filter physically traps particulate, it should be periodically regenerated (cleaned) at regular intervals by burning carbon particles.

The regeneration procedure is controlled automatically by the engine management control unit according to the filter conditions and vehicle use conditions.

During the regeneration there may be a limited increase in the engine idle speed, fan activation, a limited increase in fumes and high temperatures at the exhaust.

These are not faults; they do not impair normal car performance or damage the environment. If the dedicated message is displayed, see contents of "Warning lights and messages" paragraph.

The catalytic converter and particulate filter (DPF) reach very high temperatures during operation. Therefore do not park the car on flammable materials (grass, dry leaves, pine needles, etc.): fire hazard.

SEAT BELTS

USING THE SEAT BELTS

Wear the belt keeping the torso straight and rested against the backrest. To fasten the belts, hold the tongue A fig. 89 and insert it into the buckle B, until you hear it click into place.

On removal, if the belt jams, let it rewind for a short stretch, then pull it out again without jerking.

To release the belt, press button C. Guide the belt while it is rewinding to prevent it from twisting.

Never press button C fig. 89 when travelling.

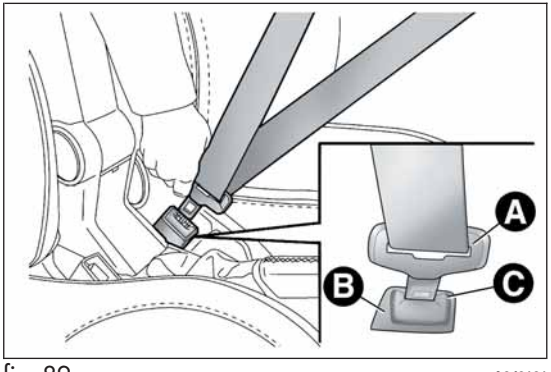

fig. 89 A0J0101

The rear seat is fitted with inertia seat belts with three anchor points and a reel. Fasten the rear seat belts as shown in fig. 90.

Remember that in the event of an accident, the rear seat passengers not wearing seat belts are exposed to a very serious risk and also represent a serious danger for the front seat occupants.

IMPORTANT The backrest is correctly secured when the red band B fig. 91 on backrest folding handle A disappears. This red band indicates that the backrest is not secured.

IMPORTANT When putting the rear seat back in its normal position, make sure that the seat belts are positioned so that they are ready to use.

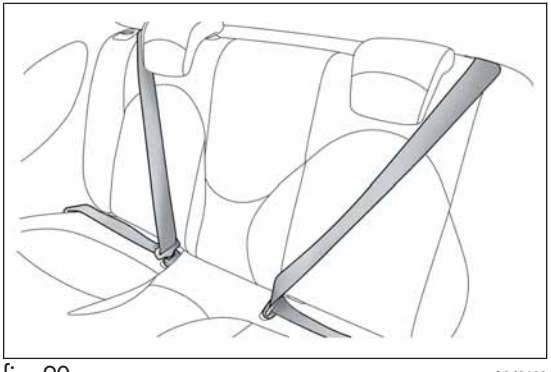

fig. 90 A0J0102

Make sure that the backrest is correctly secured on both sides (red bands B fig. 91 not visible) to prevent it from moving forward in the event of sharp braking, causing injuries to occupants.

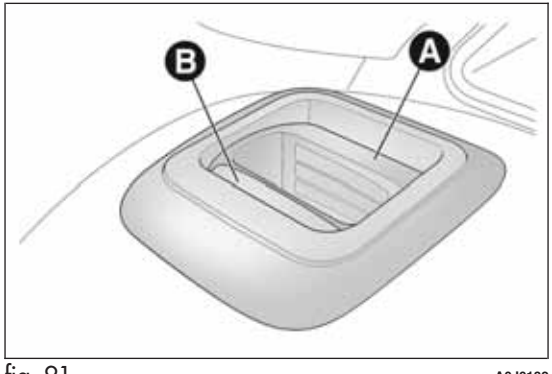

fig. 91 A0J0182

SBR SYSTEM (Seat Belt Reminder)

It consists of an acoustic warning which, switching on the warning lights in the trim located on the internal rear view mirror (see fig. 92), warns passengers in the front and rear seats that the seat belt is not fastened.

Contact Alfa Romeo Authorised Workshops to deactivate the SBR system for a long period.

The SBR system can be reactivated at any time through the Setup Menu only (see "Menu Items" in "Knowing your car" section).

The warning lights may be red or green and operate as follows:

❒ 1 = front left seat (driver status for left-hand drive versions);

❒ 2 = rear left seat (passenger);

❒ 3 = rear centre seat (passenger);

❒ 4 = rear right seat (passenger);

❒ 5 = front right seat (passenger status for left-hand drive versions).

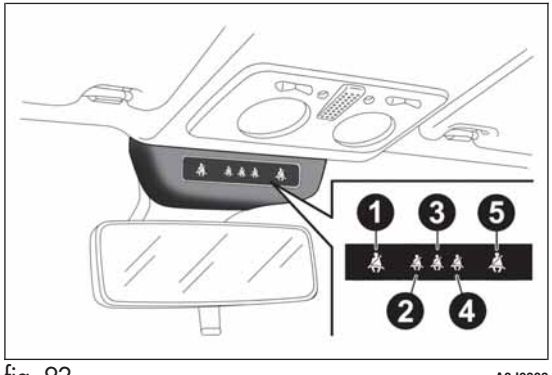

fig. 92 A0J0308

NOTE On versions equipped with sports front seats, the passenger side seat belt fastened indication (warning light 1 for RHD versions or warning light 5 for LHD versions) will never be displayed.

FRONT SEATS (warning light no. 1 = driver and no. 5 = passenger)

Driver

If the driver is the only occupant and their seat belt is not fastened, when 20 km/h is exceeded or when travelling at a speed between 10 and 20 km/h for longer than 5 seconds, an acoustic signal cycle will be started for the front seats (continuous acoustic signal for 6 seconds followed by a 90 second beep). The warning light will flash.

The warning lights will stay on constantly at the end of the cycle until the engine is stopped. The acoustic signal will be interrupted immediately when the driver's seat belt is fastened and the warning light will turn green.

The reminder cycle (acoustic and visual) will be repeated as described above and the red warning light will flash if the seat belt is unfastened again while travelling.

Passenger

A similar situation applies to the front passenger, with the difference that the warning light turns green and the indication is also interrupted when the passenger leaves the car.

If both front seat belts are unfastened a few seconds apart while the car is travelling, the acoustic signal will refer to the most recent event and the two warning lights will proceed with the visual indication independently.

REAR SEATS (warning light no. 2, no. 3 and no. 4)

For the rear seats, the reminder cycle is only activated when any seat belt is unfastened (flashing red).

In this condition, the warning light for the seat belt which has been unfastened will flash (red) for approximately 30 seconds. An acoustic signal is also emitted.

The visual indication (flashing red) will start and stop independently for each warning light if several seat belts are unfastened. The warning light will become green when the relevant seat belt is fastened again.

The rear seat warning lights will switch off, regardless of the state of the belt (red or green) approximately 30 seconds after the last signal.

IMPORTANT

The warning lights are all off if all seat belts (front and rear) are already fastened when the ignition key is turned to MAR.

All warning lights switch on when at least one belt changes from fastened to unfastened or vice versa.

PRETENSIONERS

The car is equipped with front seat belt pretensioners, which draw back the seat belts by several centimetres in the event of a violent frontal impact. This guarantees the perfect adherence of the seat belts to the occupants' bodies before the restraining action begins.

It is evident that the pretensioners have been activated when the belt withdraws towards the reel.

The car is also equipped with a second pretensioner (in the kick plate area). Its activation is signalled by the shortening of the metal cable.

A slight discharge of smoke may be produced during the activation of the pretensioner. This is not harmful and does not indicate the start of a fire.

IMPORTANT To obtain the highest degree of protection from the action of the pretensioner, wear the seat belt tight to the chest and pelvis.

The pretensioner does not require any maintenance or lubrication: any changes to its original conditions will invalidate its efficiency. If, due to unusual natural events (floods, sea storms, etc.), the device has been affected by water and/or mud, contact Alfa Romeo Authorised Services to have it replaced.

The pretensioner may be used only once. Once it has been activated, contact Alfa Romeo Authorised Services to have it replaced.

Operations which lead to impacts, vibrations or localised heating (over 100°C for a maximum of six hours) in the area around the pretensioner may damage or deploy it. Contact Alfa Romeo Authorised Services should intervention be necessary on these components.

LOAD LIMITERS

To increase protection, the front seat belt reels contain a load limiter which controls the force acting on the chest and shoulders during the belt restraining action in the event of a head-on collision.

GENERAL INSTRUCTIONS FOR USING THE SEAT BELTS

Respect and ensure that all the other occupants of the car respect the local laws in force regarding the use of seat belts. Always fasten the seat belts before starting off.

Seat belts must also be worn by pregnant women: the risk of injury in the event of an accident is reduced for them and the unborn child if they are wearing a seat belt.

Pregnant women must position the lower part of the belt very low down so that it passes over the pelvis and under the abdomen fig. 93.

The belt must not be twisted. The upper part must pass over the shoulder and cross the chest diagonally. The lower part must adhere to the pelvis fig. 94, not to the abdomen of the occupant. Never use devices (clips, clamps, etc.) to hold the seat belt away from your body.

For maximum protection, keep the backrest upright, lean back into it and make sure the seat belt fits closely across your chest and pelvis. Always fasten the seat belts for both the front and rear seats! Travelling without wearing seat belts will increase the risk of serious injury and even death in the event of an accident.

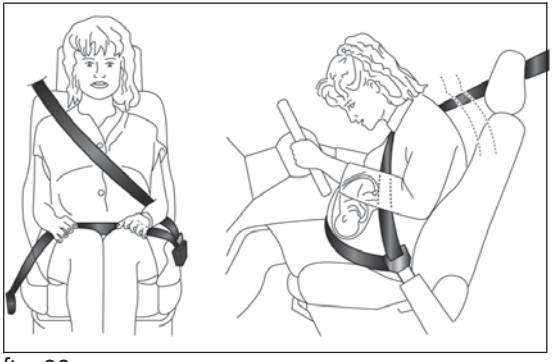

fig. 93 A0J0401

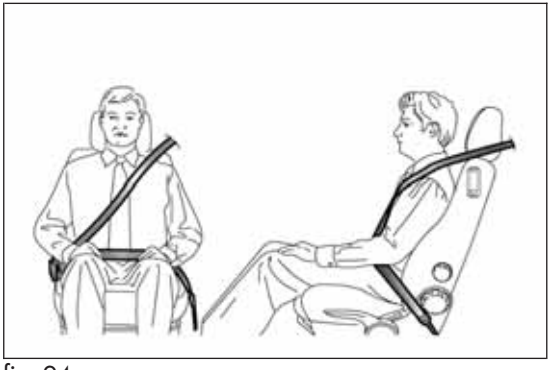

fig. 94 A0J0095

Each seat belt must be used by only one person. Never travel with a child sitting on a passenger's lap and a single belt to protect them both fig. 95. In general, do not place any objects between the person and belt.

Removing or otherwise tampering with safety belt and pretensioner components is strictly prohibited. Any operations on these components must be performed by qualified and authorised technicians. Always contact Alfa Romeo Authorized Services.

If the belt has been subjected to high levels of stress, for example after an accident, it should be changed completely together with the attachments, attachment fixing screws and the pretensioner. In fact, even if the belt has no visible defects, it may have lost its resilience.

fig. 95 A0J0096

SEAT BELT MAINTENANCE

- ❒ Always use the seat belt well stretched and never twisted; make sure that it is free to run without obstructions;
- ❒ replace the belt after an accident of a certain severity even if it does not appear to be damaged. Always replace the belt if the pretensioners were deployed;
- ❒ hand wash the seat belts with water and neutral soap, rinse and leave to dry in the shade. Never use strong detergents, bleach, paints or any other substance which could damage the belt fibres;
- ❒ prevent the retractors from getting wet: their correct operation is only guaranteed if water does not get inside;
- ❒ replace the seat belt when there is wear or cuts.

CARRYING CHILDREN SAFELY

For optimal protection in the event of an impact, all occupants must be seated and wearing adequate restraint systems, including newborn and other children!

This prescription is compulsory in all EC countries according to EC Directive 2003/20/EC.

Compared with an adult, a child's head is larger and heavier in proportion to his/her body and the child's muscular and bone structures are not fully developed. Therefore, correct restraint systems other than adult seat belts are necessary to reduce as much as possible the risk of injuries in case of accident, braking or sudden manoeuvre.

Children must be seated safely and comfortably. As far as the characteristics of the child restraint systems used allow, you are advised to keep children in rear facing restraint systems for as long as possible (at least until 3–4 years old), since this is the most protected position in the event of an impact.

The choice of the most suitable child restraint device depends on the weight of the child; there are various types of child restraint systems and you are advised always to choose the one that is most suitable for the child.

When over 1.50 m in height, from the point of view of restraint systems, children are considered as adults and wear seat belts normally.

In Europe the characteristics of children restraint systems are ruled by the regulation ECE-R44, dividing them into five weight groups:

Group	Weight groups
Group 0	up to 10 kg
Group 0+	up to 13 kg
Group 1	9-18 kg
Group 2	15-25 kg
Group 3	22-36 kg

All restraint devices must bear the type-approval data along with the control mark on a label firmly secured to the child seat which must never be removed.

Lineaccessori Alfa Romeo includes child restraint systems for each weight group. These devices are recommended having been specifically tested for Alfa Romeo cars.

SEVERE DANGER. When an active passenger airbag is fitted, DO NOT install rear facing child restraint systems on the front seat. Deployment of the airbag in an accident could cause fatal injuries to the baby regardless of the severity of the impact. It is advisable to always carry children in a child restraint system on the rear seat, which is the most protected position in the event of a collision.

On the sun visor there is a label with suitable symbols remembering that it is compulsory to deactivate the airbag if a rear facing child restraint system is fitted. Always comply with the instructions on the passenger's side sun visor (see the "Front airbag" paragraph).

FITTING "UNIVERSAL" CHILD SEAT (with seat belts)

GROUP 0 and 0+

The diagram is indicative and for assembly purposes only. Fit the child seat according to the instructions, which must be included.

Infants up to 13 kg must be carried with a child seat facing backwards of a type as shown in fig. 96 which, supporting the head, does not induce stress on the neck in the event of sudden decelerations.

The child seat is secured by the car seat belts, as shown in fig. 96 and it must restrain the child in turn with its own belts.

fig. 96 A0J0097

GROUP 1

The diagram is indicative and for assembly purposes only. Fit the child seat according to the instructions, which must be included.

Children of weight from 9 to 18 kg may be carried in child seats facing forwards fig. 97.

Child seats with Isofix attachments are available, which allow them to be secured to the seat safely without using the car seat belts.

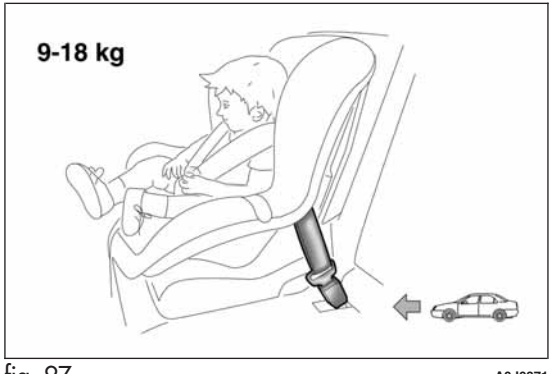

fig. 97 A0J0371

GROUP 2

The diagram is indicative and for assembly purposes only. Fit the child seat according to the instructions, which must be included.

Children from 15 to 25 kg may use the car seat belts directly fig. 98.

In this case, the child restraint system is used to position the child correctly with respect to the seat belts so that the diagonal belt section crosses the child's chest and not the neck, and the lower part is snug on the pelvis not the abdomen.

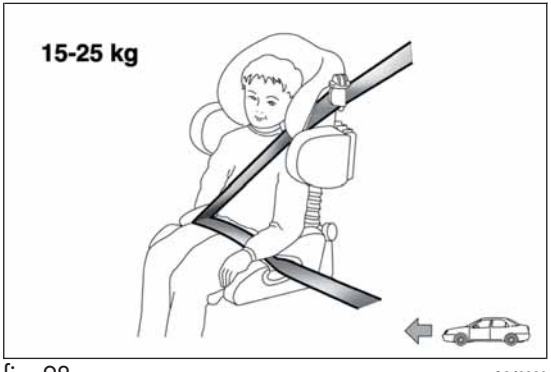

fig. 98 A0J0099

GROUP 3

The diagram is indicative and for assembly purposes only. Fit the child seat according to the instructions, which must be included.

For children between 22 kg and 36 kg, there are dedicated restraint systems that allow the seat belt to be worn correctly.

fig. 99 shows an example of correct child seat positioning on the rear seat.

Children over 1.50 m in height can wear seat belts like adults.

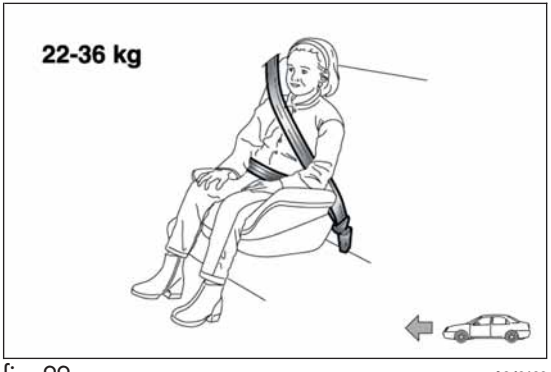

fig. 99 A0J0100

SUITABILITY OF PASSENGER SEATS FOR UNIVERSAL CHILD SEAT USE

According to the European Directive 2000/3/EC the suitability of each passenger seat position for the fixing of universal child seats is shown in the following table:

Group	Weight groups	Front passenger	Rear side and central passenger
Group 0, 0+	up to 13 kg	U	U
Group 1	9-18 kg	U	U
Group 2	15-25 kg	U	U
Group 3	22-36 kg	U	U

U= Suitable for child restraint systems in the "Universal" category, according to European Standard EEC-R44 for the specified "Groups".

PREPARATION FOR "ISOFIX" CHILD SEAT

The car is equipped with ISOFIX anchorages, a new standard which makes fitting a child seat quick, simple and safe.

Isofix systems can be fitted alongside conventional child seats on different seats in the same car.

An example of a Universal Isofix child seat for weight group 1 is shown in fig. 100.

The diagram is indicative and for assembly purposes only. Fit the child seat according to the instructions, which must be included.

The other weight groups are covered by specific Isofix child seats, which can be used only if specifically tested for this car (see list of cars provided with the child seat).

IMPORTANT The central rear seat is not approved for any type of Isofix child seat.

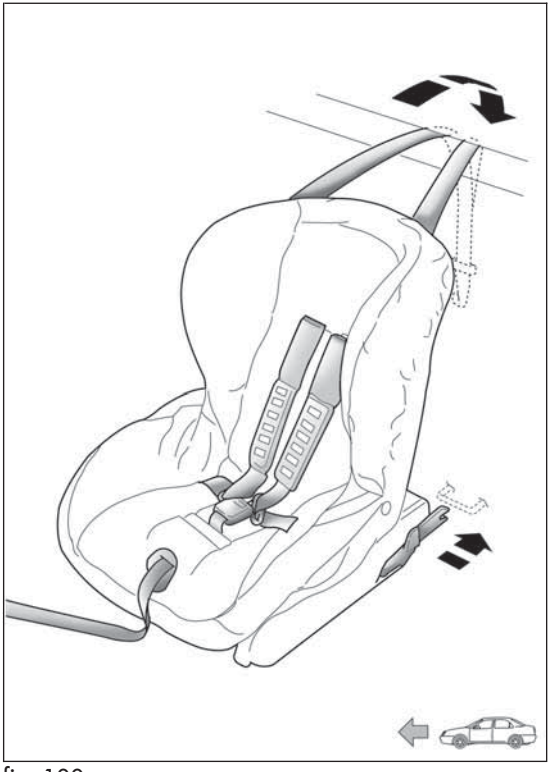

fig. 100 A0J0093

INSTALLING A UNIVERSAL ISOFIX CHILD SEAT

Proceed as follows:

❒ secure the child seat to the dedicated lower metal rings A fig. 101, positioned between the backrest and the cushion of the rear seat;

❒ fix the upper belt (available together with the seat) to the special attachments B fig. 102 located in the rear part of the backrest.

It is possible to have a mixed assembly of traditional seat and Universal Isofix ones. Remember that when using a Universal Isofix child seat, you can only use type-approved child seats with the marking ECE R44 (R44/03 or superior) “Universal Isofix”.

The universal Isofix "Duo Plus" child seat is available from Lineaccessori Alfa Romeo.

For further details on child seat installation and/or use, refer to the instruction manual provided with the child seat.

If a Universal Isofix child seat is not fixed to all three anchorages, the child seat will not be able to protect the child correctly. In a crash, the child could be seriously or fatally injured.

Fit the child seat only when the car is stationary. The child seat is correctly secured to the brackets when you hear the click. Follow the instructions for fitting, removing and positioning that the manufacturer must supply with the child seat.

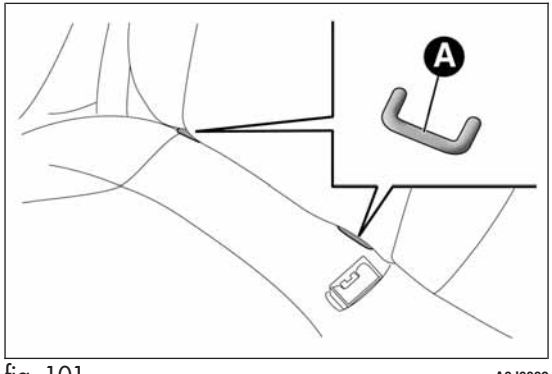

fig. 101 A0J0092

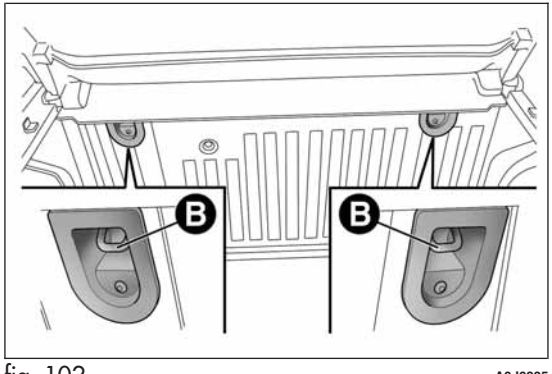

fig. 102 A0J0335

SUITABILITY OF PASSENGER SEATS FOR ISOFIX CHILD SEAT USE

The table below shows the various installation possibilities for Isofix child seats on seats fitted with Isofix attachments in accordance with European standard ECE 16.

Weight group	Child seat position	Isofix size class	Rear passenger	
			left side	right side
Group 0 up to 10 kg	Facing backwards	E	X	X
Group 0+ up to 13 kg	Facing backwards	E	X	X
	Facing backwards	D	X	X
	Facing backwards	C	X	X
Group 1 from 9 up to 18 kg	Facing backwards	D	X	X
	Facing backwards	C	X	X
	Facing forwards	B	IUF	IUF
	Facing forwards	BI	IUF	IUF
	Facing forwards	A	X	X

X: Isofix position not suitable for child seats in this weight group and/or size class.

IUF: Suitable for Isofix restraint systems to be positioned facing forwards, universal class (fitted with third upper mounting), type-approved for the relevant weight group.

Fit the child seat according to the instructions, which must be included.

Main recommendations to carry children safely

- ❒ Install the child seats on the rear seat, which is the most protected position in the event of an accident.
- ❒ Keep children in rear facing seats for as long as possible, until 2 years old.
- ❒ Should a rear facing child seat be installed on the rear seats, it is advisable to position it as far forward as the position of the front seat allows.
- ❒ If the passenger's front airbag is deactivated always check the permanent switching on of the dedicated warning light on the instrument panel to make sure that it has actually been deactivated.
- ❒ Carefully follow the instructions supplied with the child seat itself. Keep the instructions in the car along with the other documents and this handbook. Do not use second-hand child seats without instructions.
- ❒ Only one child is to be strapped into each restraint system; never carry two children simultaneously.
- ❒ Always check that the seat belts do not interfere with the child's throat.
- ❒ Always check that the seat belt is well fastened by pulling on it.
- ❒ While travelling, do not let the child sit incorrectly or unfasten the belts.
- ❒ Never allow a child to put the belt's diagonal section under an arm or behind their back.
- ❒ Never carry children on your lap, even newborns. No-one can restrain a child in the event of an accident.
- ❒ In the event of an accident, replace the child seat with a new one.

FRONT AIRBAGS

"SMART BAG" SYSTEM (MULTISTAGE FRONT AIRBAGS)

The car is equipped with multi-stage front airbags ("Smart bags") for the driver and passenger and knee bags for the driver.

The front airbags (driver's and passenger's) and the driver's knee bag have been designed to protect the occupants in the event of head-on crashes of medium-high severity, by placing cushions between the occupant and the steering wheel or dashboard.

Therefore non-deployment in other types of impacts (side impacts, rear shunts, roll-overs, etc.) does not indicate a system malfunction.

Airbags are not a replacement of but complementary to the seat belts, which you are recommended to always wear. In the event of impact, those not wearing a seat belt are projected forwards and may come into contact with the bag which is still inflating. The protection offered by the bag is compromised in these circumstances.

Front airbags may not activate in the following situations:

- ❒ frontal impacts against highly deformable objects not involving the front surface of the car (e.g. wing collision against guard rail, etc.);
- ❒ jamming of the car underneath other vehicles or protective barriers (e.g. underneath a truck or a guard rail) as, in this case, the bags would offer no additional protection with respect to the seat belt and their deployment would be inappropriate. In these cases, non-deployment does not indicate a system malfunction.

Do not apply stickers or other objects on the steering wheel, on the dashboard in the passenger side airbag area, on side upholstery on the roof or on the seats. Never put objects (e.g. mobile phones) on the passenger's side dashboard since they could interfere with correct inflation of the airbag and also cause serious injury to the passengers.

FRONT DRIVER SIDE AIRBAG

This consists of an instantly inflating bag contained in a special compartment in the centre of the steering wheel fig. 103.

Always drive keeping your hands on the steering wheel rim so the airbag can inflate freely if necessary. Do not drive with your body bent forward. Keep the back of your seat upright and lean back into it.

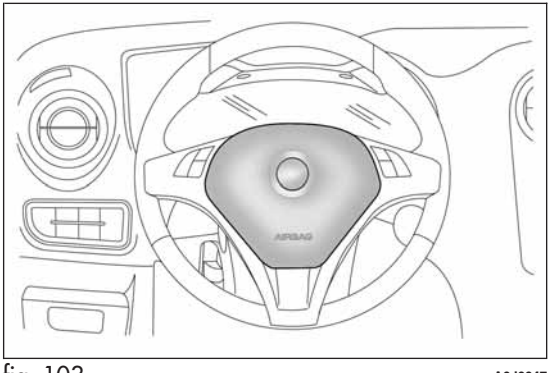

fig. 103 A0J0047

FRONT PASSENGER AIRBAG

This consists of an instantly inflating bag contained in a special recess in the dashboard fig. 104: this bag has a larger volume than that of the driver's.

SEVERE DANGER When an active passenger airbag is fitted, DO NOT install rearward facing child restraint systems on the front seat. Deployment of the airbag in an accident could cause fatal injuries to the child regardless of the severity of the impact. Therefore, always deactivate the passenger airbag when a rearward facing child restraint system is installed on the front passenger seat. The front passenger seat must also be positioned back as far as possible in order to avoid the child restraint system from coming into contact with the dashboard. Immediately reactivate the passenger airbag as soon as the child restraint system has been removed.

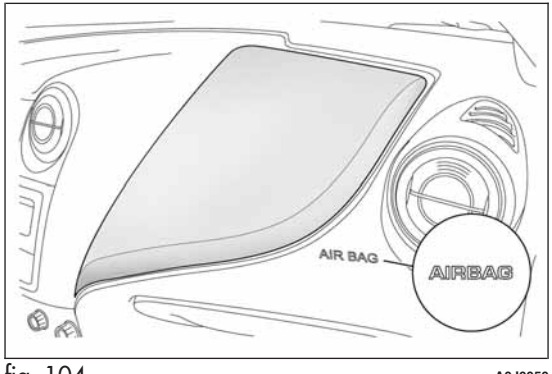

fig. 104 A0J0050

FRONT PASSENGER AIRBAG AND CHILD RESTRAINT SYSTEMS

When an active passenger airbag is fitted, DO NOT install rear facing child restraint systems on the front seat. Deployment of the airbag in an accident could cause fatal injuries to the baby regardless of the severity of the impact.

ALWAYS comply with the instructions on the label stuck on the passenger side sun visor fig. 105.

fig. 105 A0J0450

FRONT PASSENGER AIRBAG AND CHILD RESTRAINT SYSTEMS: WARNING

I	RISCHIO DI FERITE GRAVI O MORTALI. I seggiolini bambino che si montano nel verso opposto a quello di marcia non vanno installati sui sedili anteriori in presenza di air bag passeggero attivo.
GB	DEATH OR SERIOUS INJURY CAN OCCUR. NEVER use a rearward facing child restraint on a seat protected by an ACTIVE AIRBAG in front of it, DEATH or SERIOUS INJURY to the CHILD can occur
F	RISQUE DE MORT OU DE BLESSURES GRAVES. NE PAS positionner le siège pour enfant tourné vers l'arrière, en cas d'air bag passager actif.
D	Nichtbeachtung kann TOD oder SCHWERE VERLETZUNGEN zur Folge haben. Rückwärts gerichtete Kinderrückhaltesysteme (Babyschale) dürfen nicht in Verbindung mit aktiviertem Beifahrerairbag auf dem Beifahrersitz verwendet warden
NL	DIT KAN DODELIJK ZIJN OF ERNSTIGE ONGELUKKEN VEROORZAKEN. Plaats het kinderstoeltje niet ruggelings op de voorstoel wanneer er een airbag aanwezig is.
E	PUEDE OCACIONAR MUERTE O HERIDAS GRAVES. NO ubicar el asiento para niños en sentido inverso al de marcha en el asiento delantero si hubiese airbag activo lado pasegero.
PL	MOŻE GROZIĆ ŚMIERCIA LUB CIEŻKIMI OBRAŻENIAMI. NIE WOLNO umieszczać foletika dzieciecego tylem do kierunku jazdy na przednim siedzeniu w przypadku zainstalowanej aktywnej poduszki powietrznej pasażera.
TR	ÖLÜM VEYA AĞIR ŞEKİLDE YARALANMAYA SEBEP OLABİLİR Yolcu airbağı aktif halde iken çocuk koltuğunu araç gidiş yönüne ters biçimde yerleştirmeyin.
DK	FARE FOR DØDELIGE KVÆSTELSER OG LIVSTRUENDE SKADER. Placer aldrig en bagudvendt barnestol på passagerersædet, hvis passager-airbagen er indstillet til at være aktiv (on).
EST	TAGAJÄRJEKS VÕIVAD OLLA TÕSISED KEHAVIGASTUSED VÕI SURM. Turvapadja olemasolu korral ärge asetage lapse turvaistet sõidusuunaga vastassuunas.
FIN	KUOLEMANVAARA TAI VAKAVIEN VAMMOJEN UHKA. Älä aseta lasten turvaistuinta niin, että lapsi on selkä menosuuntaan, kun matkustajan airbag on käytössä.
P	RISCO DE MORTE OU FERIMENTOS GRAVES. Não posicionar o banco para crianças numa posição contrária ao sentido de marcha quando o airbag de passageiro estiver activo.
LT	GALI IŠTIKTI MIRTIS ARBA GALITE RIMTAI SUSIŽEISTI. Nedėkite vaiko sėdynės atgręžtos nugara į priekinį automobilio stiklą ten, kur yra veikiant keleivio oro pagalvė.
S	KAN VARA LIVSHOTANDE ELLER LEDA TILL ALLVARLIGA SKADOR. Placera aldrig en bakåtvänd barnstol i framsätet då passagerarsidans krockkudde är aktiv.
H	HALÁSOS VAGY SÚLYOS BALESET KÖVETKEZHET BE. Ne helyezzük a gyermekülést a menetiránnyal szembe, ha az utas oldalán légzsák működik.
LV	VAR IZRAISĪT NĀVI VAI NOPIETNAS TRAUMAS. Nenovietot mazuļa sēdekli pretēji braukšanas virzienam, ja pasažiera pusē ir uzstādīts gaisa spilvens.
CZ	HROZÍ NEBEZPEČÍ VÁŽNÉHO UBLÍŽENÍ NA ZDRAVÍ NEBO DOKONCE SMRTI. Neumisťujte dětskou sedačku do opačné polohy vůči směru jízdy v případě aktivního airbagu spolujezdce.
SLO	LAHKO PRIDE DO SMRTI ALI HUDIH POŠKODB. Otroškega avtomobilskega sedeža ne nameščajte v obratni smeri vožnje, če ima vozilo vgrajene zračne blazine za potnike.
RO	SE POATE PRODUCE DECESUL SAU LEZIUNI GRAVE. Nu aşezaţi scaunul de maşină pentru bebeluşi în poziţie contrară direcţiei de mers atunci când airbag-ul pasagerului este activat.
GR	ΜΠΟΡΕΙ ΝΑ ΠΡΟΚΛΗΘΟΥΝ ΘΑΝΑΤΟΣ Ή ΣΟΒΑΡΑ ΤΡΑΥΜΑΤΑ. Μην τοποθετείτε το καρεκλάκι αυτοκινήτου για παιδιά σε αντίθετη προς την φορά πορείας θέση σε περίπτωση που υπάρχει αερόσακος εν ενεργεία στη θέση συνεπιβάτη.
BG	ИМА ОПАСНОСТ ОТ СМЪРТ И СЕРИОЗНИ НАРАНЯВАНИЯ. Не поставяйте столчето за пренасяне на бебета в положение обратно на посоката на движение, при положение активно на въздушната възглавница за пътуване.
SK	MÔŽE NASTAŤ SMRŤ ALEBO VÁŽNE ZRANENIA Nedávajte autosedačku pre deti do polohy proti chodu vozidla, keď je aktívny airbag spolujazdca.
RUS	ВОЗМОЖНЫ ТРАВМЫ И ЛЕТАЛЬНЫЙ ИСХОД. Детское кресло, устанавливающееся против направления движения, нельзя монтировать на месте переднего пассажира, если последнее оборудовано активной подушкой безопасности.
AS	قد تحدث حالات وفاة أو إصابات بالغة. لا تستخدم مقاعد الأمان الخاصة بالأطفال على مقعد مزود "بوسادة هوائية"، حيث إن الطفل قد يتعرض للوفاة أو لإصابة بالغة.

fig. 106

A0J0451

DRIVER SIDE KNEE BAG

This is located in a dedicated compartment under the steering wheel fig. 107. It provides additional protection in the event of a frontal impact.

Deactivating passenger side airbags: front airbag and side bag for pelvis, chest and shoulders protection (Side bag)

If a child must be carried on the front seat in a rear facing child restraint system, deactivate the passenger side front airbag and side bag for pelvis, chest and shoulder protection (Side bag).

With airbags deactivated, warning light lights up in the trim located above the internal rearview mirror fig. 108.

To deactivate the airbags, see the "Knowing your car" section, "Menu items" paragraph.

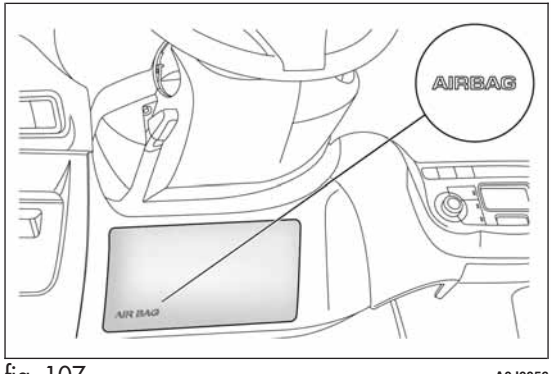

fig. 107 A0J0056

SIDE AIRBAGS (SIDE BAGS - WINDOW BAGS)

To increase protection of occupants in case of side collision, the car is equipped with front side bags for pelvis, chest and shoulder protection (side bags) for the driver and the passenger and airbags protecting the head of front and rear occupants (window bags).

Non-activation of side bags in other types of collisions (head-on collisions, rear shunts, roll-overs, etc...) is not an indication of system malfunction.

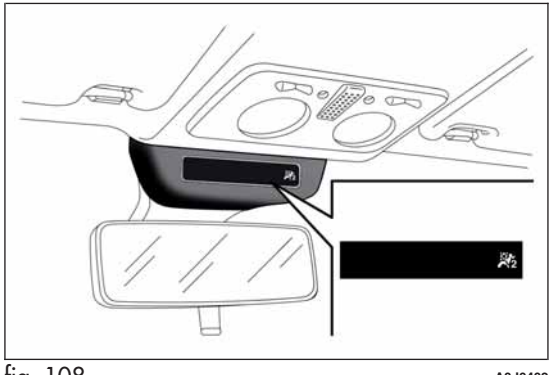

fig. 108 A0J0402

FRONT SIDE AIRBAGS (SIDE BAGS)

These comprise two types of bags located in the front seat backrests fig. 109 which protect the pelvic, chest and shoulder area of the occupants in the event of a side impact of medium-high severity.

SIDE AIRBAGS FOR HEAD PROTECTION (WINDOW BAGS)

This comprises two "curtain" bags housed behind the roof side linings and covered by special trims fig. 110.

It is designed to protect the head of front and rear occupants in the event of a side collision, thanks to the wide cushion inflation surface.

The deployment of side bags in the event of side impacts of low severity is not required.

The airbags are not deployed in the event of low-severity impacts (for which the retaining action of the seat belts is sufficient). It is therefore always necessary to wear seat belts.

In the event of a side impact, the system provides optimum protection if the passenger assumes the correct position on the seat, thus allowing correct window bag deployment.

Do not hook rigid objects to the coat hooks or to the support handles.

Do not rest your head, arms or elbows on the door, windows or the area in which the window bag is located to avoid possible injury during inflation.

Never lean your head, arms or elbows out of the window.

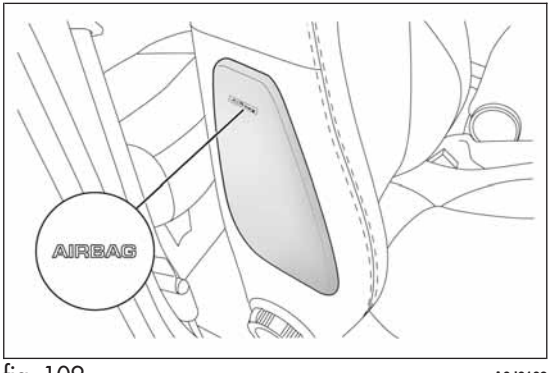

fig. 109 A0J0103

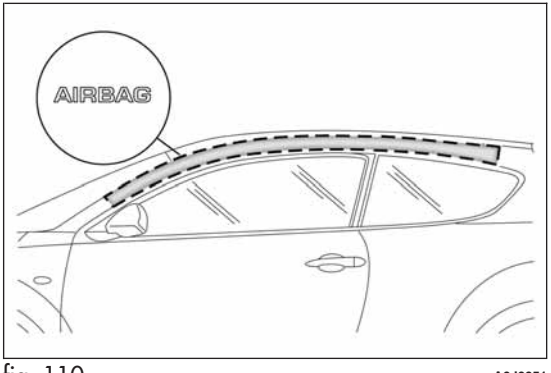

fig. 110 A0J0051

IMPORTANT

Do not wash the seats with water or pressurised steam (by hand or at automatic seat washing stations).

The front and/or side bags may activate in the event of sharp knocks to the underbody of the car (e.g. impact with steps, pavements, potholes or road bumps etc.).

When the airbag deploys it emits a small amount of dust: the dust is harmless and does not indicate the beginning of a fire. The dust may irritate the skin and eyes however: in this case, wash with neutral soap and water.

All operations on airbags (inspection, repair and replacement) must be carried out by Alfa Romeo Authorized Services.

If the car is to be scrapped, contact Alfa Romeo Authorised Services to have the airbags deactivated.

Pretensioners and airbags are deployed in different ways, according to the type of impact. Failure to deploy of one of the devices does not necessarily indicate a system malfunction.

If the warning light does not switch on when the key is turned to MAR-ON, or stays on while driving (on some versions together with a message on the display) there may be a fault in the restraint systems. In this case, airbags or pretensioners may not be activated in the case of an accident or (in a lesser number of cases) they may be activated incorrectly. Before proceeding, contact Alfa Romeo Authorised Services to have the system checked immediately.

Do not travel carrying objects in your lap, in front of your chest or between your lips (pipe, pencils, etc.): they could cause severe injury if the airbag is deployed.

If the car has been subject to theft, attempted theft, vandalism, or flooding, have the airbag system inspected at Alfa Romeo Authorised Services.

When the ignition key is in and turned in the MAR-ON position and the engine is off, the airbags may deploy if the car is crashed by another moving vehicle. Therefore, even if the car is stationary, when an active passenger airbag is fitted, DO NOT install rear facing child restraint systems on the front passenger seat. Deployment of the airbag following an impact could cause fatal injuries to the child. Therefore, always deactivate the passenger airbag when a rear facing child restraint system is installed on the front passenger seat. The front passenger seat must also be positioned back as far as possible in order to avoid the child restraint system from coming into contact with the dashboard. Immediately reactivate the passenger airbag as soon as the child restraint system has been removed. Also remember that, if the key is turned to STOP, none of the safety devices (airbags or pretensioners) will be deployed in the event of collision. Non-deployment in such cases does not indicate a system malfunction.

When the ignition key is turned to MAR, the warning light (with passenger side front airbag activated) switches on and flashes for a few seconds to remind you that the passenger airbag will be deployed in a crash, after which it should switch off.

The front airbag is designed to be deployed for impacts of a greater intensity than for the pretensioners. For impacts whose intensity falls between the two levels, it is normal for only the pretensioners to be activated.

The airbag does not replace seat belts but increases their effectiveness. Because front airbags are not deployed for low-speed crashes, side collisions, rear-end shunts or rollovers, occupants are protected, in addition to any side bags, only by their seat belts, which must therefore always be fastened.

GETTING TO KNOW YOUR CAR
SAFETY
STARTING AND DRIVING
IN AN EMERGENCY
SERVICING AND MAINTENANCE
TECHNICAL SPECIFICATIONS
INDEX

STARTING THE ENGINE

PROCEDURE FOR PETROL VERSIONS
(excluding Turbo TwinAir versions)

Proceed as follows:

❒ engage the handbrake and place the gearbox lever in neutral;

❒ fully depress the clutch pedal, without touching the accelerator;

❒ turn the ignition key to AVV and release it as soon as the engine starts.

IMPORTANT

❒ If the engine does not start at the first attempt, return the ignition key to STOP before repeating the starting procedure.

❒ If, when the ignition key is at MAR, the instrument panel warning light (or the symbol on the display) remains on together with warning light , turn the key to STOP and then back to MAR. If the warning light remains on, try the other keys provided. If you are still unable to start the engine contact an Alfa Romeo Authorised Service Provider.

❒ Never leave the ignition key at MAR when the engine is stopped.

Engine starting for Turbo TwinAir versions

Proceed as follows:

❒ Engage the handbrake and place the gear lever in neutral or fully press the clutch pedal if a gear other than neutral is engaged;

❒ turn the ignition key to AVV and release it as soon as the engine starts.

Note If the vehicle does not start at the first attempt, return the ignition key to STOP and repeat the starting procedure placing the gear lever in neutral and fully pressing the clutch pedal.

IMPORTANT

❒ If, when the ignition key is at MAR, the instrument panel warning light (or the symbol on the display) remains on together with warning light , turn the key to STOP and then back to MAR. If the warning light remains on, try the other keys provided. If you are still unable to start the engine contact an Alfa Romeo Authorised Service Provider.

❒ Never leave the ignition key at MAR when the engine is stopped.

PROCEDURE FOR DIESEL VERSIONS

Proceed as follows:

❒ engage the handbrake and place the gearbox lever in neutral;

❒ turn the ignition key to MAR-ON: the warning lights and (or the symbol on the display) on the instrument panel will switch on;

❒ wait for the warning lights (or the symbol on the display) to switch off;

❒ fully depress the clutch pedal, without touching the accelerator;

❒ turn the ignition key to AVV; warning light switches off. Waiting too long will waste the heating work carried out by the glow plugs. Release the key as soon as the engine starts.

If the warning light flashes for about 1 minute after starting or during prolonged cranking, this indicates a fault in the glow plug preheating system. Use the car normally if the engine starts and go to Alfa Romeo Authorized Services as soon as possible.

It is dangerous to run the engine in enclosed areas. The engine takes in oxygen and releases carbon dioxide, carbon monoxide and other toxic gases.

It is advisable not to demand maximum performance from your car (e.g. excessive acceleration, long distances at maximum rpm, excessively intense braking, etc.) when it is first used.

When the engine is off, do not leave the ignition key turned to MAR to prevent unnecessary electrical consumption from draining the battery.

Remember that the brake servo and electromechanical power steering are not operational until the engine has been started, therefore much more effort than usual is required on the brake pedal and steering wheel.

Never start the engine by pushing, towing or driving downhill. These manoeuvres may damage the catalytic converter.

WARMING UP THE ENGINE JUST AFTER IT HAS STARTED

Proceed as follows:

❒ drive off slowly, letting the engine turn at medium revs and without accelerating abruptly;

❒ do not demand maximum performance for the first few kilometres. It is advisable to wait until the engine coolant temperature indicator starts moving.

STOPPING THE ENGINE

Turn the ignition key to STOP while the engine is idling.

IMPORTANT After a demanding drive, before turning the engine off you should allow it to idle to allow the temperature in the engine compartment to decrease.

A quick burst on the accelerator before stopping the engine serves absolutely no practical purpose. It wastes fuel and is especially damaging to turbocharged engines.

PARKING

Switch off the engine and pull up the handbrake. Engage a gear (1st if the car is facing uphill or reverse if it is facing downhill) and leave the wheels steered to one side.

If the car is parked on a steep slope block the wheels with a wedge or stone. Always remove the ignition key when leaving the car.

Never leave children unattended in the car. Always remove the key from the ignition when leaving the car and take it with you.

HANDBRAKE

To engage the handbrake pull lever A fig. 111 upwards until the car is secured. To release the handbrake, raise lever A slightly, hold down button B and lower the lever.

IMPORTANT Carry out these manoeuvres with the brake pedal pressed.

IMPORTANT For cars equipped with a front armrest, lift this up to ensure that it does not interfere with the action of the handbrake.

The car should be locked after a few notches: if this is not the case, contact Alfa Romeo Authorized Services to have the handbrake adjusted.

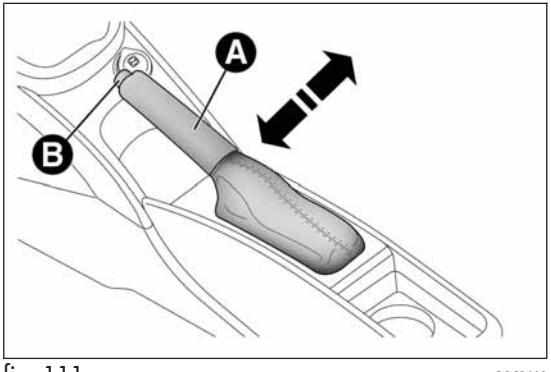

fig. 111 A0J0110

USING THE GEARBOX

To engage the gears, fully depress the clutch pedal and put the gear lever into the desired position (the diagram for gear engagement is shown on the knob of the lever fig. 112, fig. 113, fig. 114).

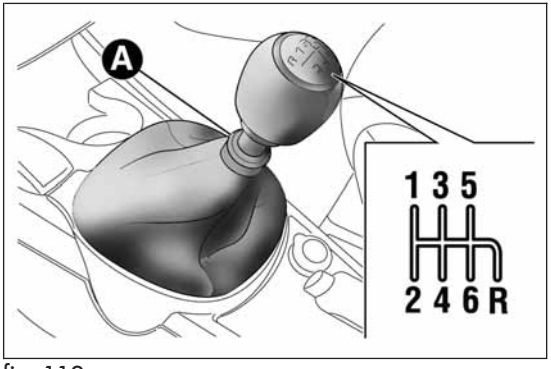

fig. 112 A0J0265

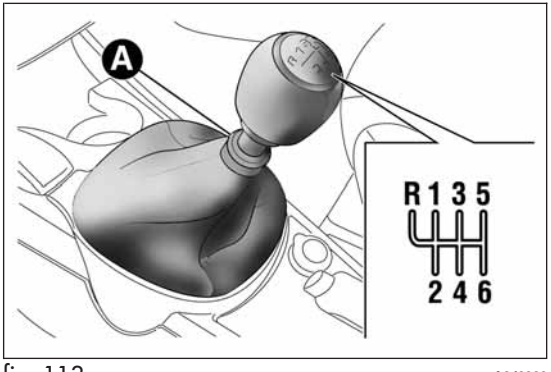

fig. 113 A0J0266

On models with 6 gears, to engage 6th gear, press the lever slightly to the right to avoid changing into 4th by mistake. The same applies to the shift from 6th to 5th gear.

To engage reverse (R) from neutral position, raise ring A underneath the knob and, at the same time:

- ❒ on 1.4 Turbo MultiAir 170 HP Quadrifoglio Verde and 1.6 JTD_M versions, move the lever to the left and then forwards fig. 113;
- ❒ on Turbo TwinAir, 1.4 Petrol, 1.4 Turbo MultiAir and 1.3 JTD_{M-2} versions, move the lever to the right and then backwards fig. 112 and fig. 114.

IMPORTANT Reverse can only be engaged when the car is completely stationary.

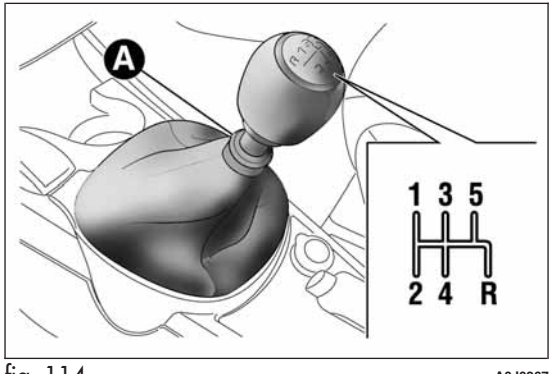

fig. 114 A0J0267

Press the clutch pedal fully to change gears correctly. It is therefore essential that there is nothing under the pedals: make sure the mats are lying flat and do not get in the way of the pedals.

Do not drive with your hand resting on the gear lever as the force exerted, even if slight, could lead over time to premature wear of the gearbox internal components.

SAVING FUEL

Here are some suggestions which can help you to save fuel and lower harmful emissions.

GENERAL CONSIDERATIONS

Car maintenance

Have checks and adjustments carried out in accordance with the "Scheduled Servicing Plan" (see chapter "Maintenance and care").

Tyres

Check the tyre pressure at least once every 4 weeks: if the pressure is too low, consumption levels increase as resistance to rolling is higher.

Unnecessary loads

Do not travel with an overloaded boot. The weight of the car and its arrangement greatly affect fuel consumption and stability.

Roof rack/ski rack

Remove the roof rack or the ski rack from the roof after use. These accessories lower aerodynamic penetration and adversely affect consumption levels. It is better to use a trailer to transport particularly bulky objects.

Electrical devices

Only use electrical devices for the time needed. The heated rear window, additional headlights, windscreen wipers and heater fan require a considerable amount of energy; increasing the current uptake increases fuel consumption (by up to +25% in an urban cycle).

Climate control system

Using the climate control system will increase consumption: use the air vents when the external temperature allows it.

Devices for aerodynamic control

The use of non-certified devices for aerodynamic control may adversely affect air drag and fuel consumption.

DRIVING STYLE

Starting

Do not warm up the engine at low or high revs when the vehicle is stationary; this causes the engine to warm up more slowly, thereby increasing fuel consumption and emissions. It is therefore advisable to move off immediately, slowly, avoiding high speeds: in this way the engine will warm up more quickly.

Unnecessary actions

Avoid revving up when at traffic lights or before switching off the engine. The latter action, like double-declutching, is unnecessary and causes increased fuel consumption and pollution.

Gear selection

Use a higher gear when traffic and road conditions allow it. Using a low gear for faster acceleration will increase consumption. In the same way improper use of a high gear increases consumption, emissions and engine wear.

Maximum speed

Fuel consumption considerably increases as speed increases. Keep your speed as even as possible, avoiding unnecessary braking and acceleration which cause excessive fuel consumption and increased emissions.

Acceleration

Accelerating violently severely affects consumption and emissions: acceleration should be gradual and should not exceed the maximum torque.

CONDITIONS OF USE

Cold starting

Short distances and frequent cold start-ups will prevent the engine from reaching optimal running temperature. This results in a significant increase in consumption levels (from +15 to +30% on the urban cycle) and emissions.

Traffic and road conditions

High fuel consumption is caused by heavy traffic, for instance when travelling in a queue with frequent use of low gears or in large towns with many traffic lights. Winding mountain roads and rough road surfaces also adversely affect consumption.

Stops in traffic

During prolonged stops (e.g. level crossings) switch the engine off.

TOWING TRAILERS

IMPORTANT

The vehicle must be provided with a type-approved tow hook and adequate electrical system to tow caravans or trailers. Installation must be carried out by a specialist.

Fit any specific and/or additional rear view mirrors as specified by the Highway Code.

Remember that, when towing a trailer, steep hills are harder to climb, braking distances increase and overtaking takes longer relative to the overall weight of the trailer.

Engage a low gear when driving downhill, rather than constantly using the brake.

The weight of the trailer reduces the load capacity of the car by the same amount. Consider the weight at full load, including accessories and luggage, to make sure you do not exceed the maximum towable weight (shown in the registration document).

Respect the speed limits specific to each country for vehicles towing trailers. In any case do not exceed 100 km/h.

INSTALLING A TOW HOOK

Contact Alfa Romeo Authorised Services to install a tow hook.

The ABS with which the car is equipped will not control the braking system of the trailer. Particular caution is therefore required on slippery roads.

Do not, under any circumstances, modify the vehicle's braking system to control the trailer breaking system. The towing breaking system must be completely independent of the vehicle's hydraulic system.

SNOW TYRES

Use snow tyres of the same size as the normal tyres provided with the car: Alfa Romeo Authorized Services will be able to advise you on the most appropriate tyre to use.

Only use these tyres in the event of ice or snow on the roads.

For the type of snow tyre to be used, inflation pressures and the specifications, strictly follow the instructions given in the "Wheels" paragraph in the "Technical specifications" section.

The winter performance of these tyres is considerably reduced when the tread thickness is less than 4 mm. Replace them in this case.

Due to their specific features, the performance of snow tyres is much lower than that of normal types in normal conditions or long motorway stretches. Their usage should therefore be restricted in accordance with their type approval.

All four tyres should be the same (brand and track) to ensure greater safety when driving and braking and good driveability. Remember that it is inadvisable to change the rotation direction of tyres.

The maximum speed for snow tyres marked "Q" is 160 km/h, while it is 190 km/h for "T" tyres and 210 km/h for "H" tyres. The highway code speed limits must however always be complied with.

SNOW CHAINS

The use of snow chains should be in compliance with local regulations. The snow chains may be applied only onto the front wheel tyres (drive wheels).

Check the tension of the snow chains after the first few metres have been driven.

Use reduced size snow chains: on all versions, for 195/55 R16" and 205/55 R16" size tyres use low-clearance snow chains with a maximum projection beyond the tyre profile of 9 mm.

IMPORTANT The space-saver wheel cannot be fitted with snow chains. If a front (drive) wheel is punctured and snow chains must be used, you must remove a normal wheel from the rear and replace this one with the space-saver wheel. In this way, with two normal drive wheels, it is possible to use snow chains.

Keep your speed down when snow chains are fitted; do not exceed 50 km/h. Avoid potholes, steps and pavements and avoid driving long distances on roads not covered with snow to avoid damaging the car and the roadbed.

STORING THE CAR

If the car is to be left inactive for longer than a month, the following precautions should be noted:

- ❒ park the vehicle in a dry, covered and, if possible, ventilated area; engage a gear and check that the handbrake is not engaged;
- ❒ disconnect the negative battery terminal and check the battery charge. Repeat this check once every three months during storage;
- ❒ if you have not disconnected the battery, check the battery charge every thirty days;
- ❒ clean and protect the painted parts using protective wax;
- ❒ clean and protect the shiny metal parts using special compounds available commercially;
- ❒ sprinkle talcum powder on the windscreen and rear window wiper rubber blades and lift them off the glass;
- ❒ slightly open the windows;
- ❒ cover the car with a cloth or perforated plastic sheet. Do not use compact plastic sheets which do not allow humidity to evaporate from the surface of the car.
- ❒ inflate tyres to +0.5 bar above the standard specified pressure and check it at intervals;
- ❒ do not drain the engine cooling system.

IMPORTANT After turning the ignition key to STOP, wait at least 1 minute before disconnecting the battery power supply.

In an emergency we recommend that you call the freephone number found in the Warranty Booklet. You can also consult www.alfaromeo.com to find your nearest Alfa Romeo Authorized Services.

STARTING THE ENGINE

If the warning light on the instrument panel remains on constantly, contact Alfa Romeo Authorized Services immediately.

JUMP STARTING

If the battery is flat, the engine may be started using an auxiliary battery with the same capacity or a little higher than the flat one.

Proceed as follows to start the vehicle:

❒ connect the positive terminals (+ sign near the terminal) of the two batteries with a jump lead fig. 115;

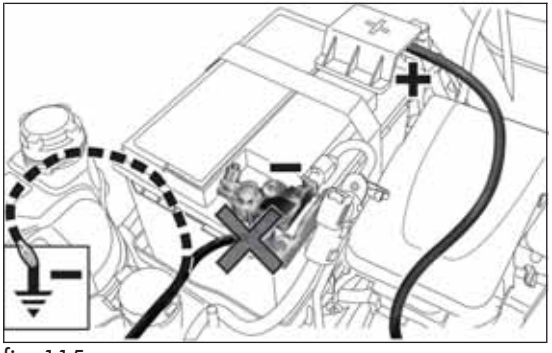

fig. 115 A0J0392

❒ with a second cable, connect the negative terminal (–) of the auxiliary battery to an earthing point on the engine or the gearbox of the car to be started;

❒ start the engine; afterwards, follow the sequence above in reverse order to remove the cables.

For versions with Start&Stop system, to carry out the jump starting procedure, refer to the paragraph “Start&Stop system” in the “Getting to know your car” section.

Contact Alfa Romeo Authorized Services if you cannot start the engine after several attempts.

IMPORTANT Never connect the negative terminals of the two batteries directly! If the auxiliary battery is installed on another car, prevent accidental contact between metallic parts of the two cars.

Never use a fast battery-charger to start the engine as this could damage the electronic systems of your car, particularly the ignition and fuel supply control units.

This starting procedure must be performed by expert personnel because incorrect actions could cause electrical discharge of considerable intensity. Furthermore, battery fluid is poisonous and corrosive: avoid contact with skin and eyes. Keep naked flames and lighted cigarettes away from the battery and do not cause sparks.

BUMP STARTING

Never start the engine by pushing, towing or coasting downhill.

REPLACING A WHEEL

GENERAL INSTRUCTIONS

The car is equipped with the "Fix&Go Automatic Kit": see the paragraph "Fix&Go Automatic Kit" for how to use this device.

As an alternative to the "Fix&Go Automatic Kit" the car may be equipped with a space-saver wheel: see the instructions on the following pages for changing the tyre.

The spare wheel is specific for your car. Do not use it on cars of different models. Do not use spare wheels of different models on your car. The space-saver wheel must only be used in case of emergency. It must only be used for the distance necessary to reach a service point and the car speed must not exceed 80 km/h. The space-saver wheel has an orange sticker that summarises the main cautions for use and limitations. Never remove or cover the label. Never apply any hub cap to the space-saver spare wheel.

Alert other drivers that the car is stationary in compliance with local regulations: hazard warning lights, warning triangle, etc. Any passengers on board should leave the car, especially if it is heavily laden. Passengers should stay away from on-coming traffic while the wheel is being changed. In case of steep slopes or rough slopes, place wedges or other materials suitable to stop the vehicle under the wheels.

The vehicle's driving characteristics will be modified with the space-saver wheel fitted. Avoid violent acceleration and braking, sharp steering and fast cornering. The total life of a space-saver wheel is approximately 3,000 km, after which it must be replaced by another wheel of the same type. Never attempt to fit a conventional tyre on a rim designed for use as a space-saver wheel. Repair and refit the standard wheel as soon as possible. Two or more space-saver wheels should never be used together. Do not grease the threads of bolts before fitting them: they might slip out.

The jack provided is only intended to be used for replacing tyres on the vehicle with which it is supplied, or on same-model vehicles. Never use the jack for other purposes, such as lifting other car models. Never use it for repair operations under the vehicle. Incorrect positioning of the jack may cause the car to fall. Do not use the jack for loads higher than those shown on the label. Never install snow chains on the small spare wheel; if a front tyre (driving wheel) is punctured and you need to use snow chains, use a standard wheel from the rear axle and install the small spare wheel on the rear axle. In this way, with two normal front drive wheels, it is possible to use snow chains.

Incorrectly fitting the hubcap may cause it to fall off when the vehicle is in motion. Never tamper with the inflating valve. Never introduce tools of any kind between rim and tyre. Regularly check the inflation pressure of the tyres and space-saver wheel (see chapter "Technical specifications").

JACK

Please note that:

❒ the jack weight is 1.76 kg;

❒ the jack requires no adjustment;

❒ the jack cannot be repaired and in the event of a fault it must be replaced by another original one;

❒ no tool other than its cranking device may be fitted on the jack.

To change a wheel proceed as follows:

❒ stop the car in a position that is not dangerous for oncoming traffic where you can change the wheel safely. The ground must be flat and sufficiently compact;

❒ switch off the engine, pull up the handbrake and engage 1ª gear or reverse; put on the high visibility jacket (required by law) before leaving the vehicle;

❒ open the luggage compartment, pull tab A fig. 116 and lift up the mat;

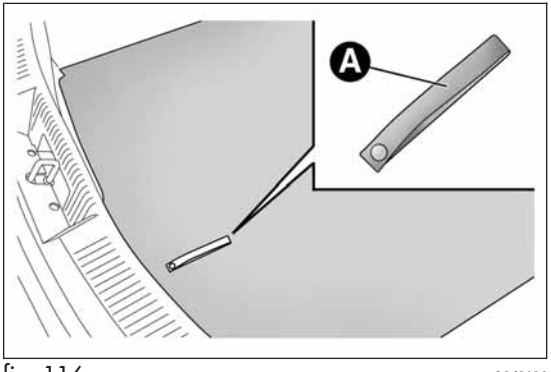

fig. 116 A0J0104

❒ unscrew locking device Afig. 117, take toolbox B and bring it next to the wheel to replace. Then take the space-saver wheel C;

❒ **for versions with steel rims**: insert the screwdriver in the opening A fig. 118 in order to trigger the hub cap retaining clip B;

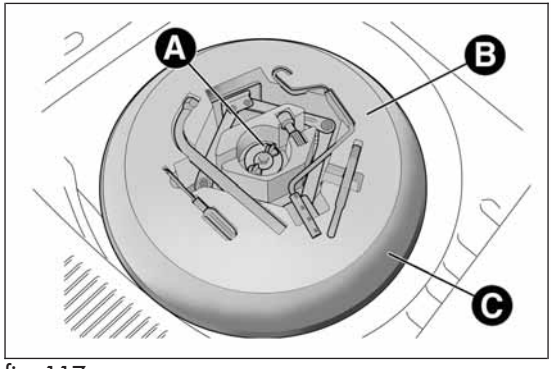

fig. 117 A0J0105

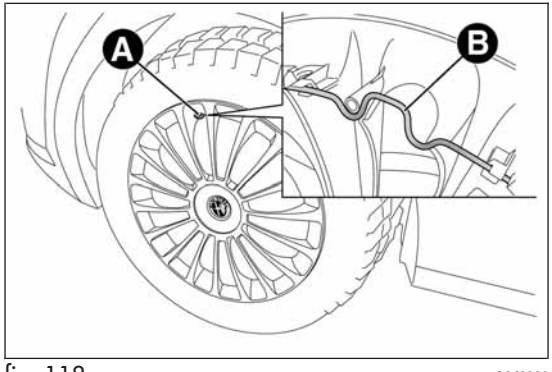

fig. 118 A0J0236

❒ **for versions with alloy rims**: shake the car to facilitate detachment of the rim from the wheel hub. Some versions may be fitted with alloy wheels with a hub cap (fig. 119). To remove the hub cap, insert the screwdriver into housings A in order to access the fixing bolts. Replace the wheel as described previously;

❒ take wrench A fig. 120 and loosen the fixing bolts by about one turn;

❒ position the jack under the car, near the wheel to be changed. On versions where this is fitted, be careful not to damage the plastic aerodynamic guard;

❒ operate the device A fig. 121 so as to extend the jack, until the upper part B fig. 122 is inserted correctly inside the side member C;

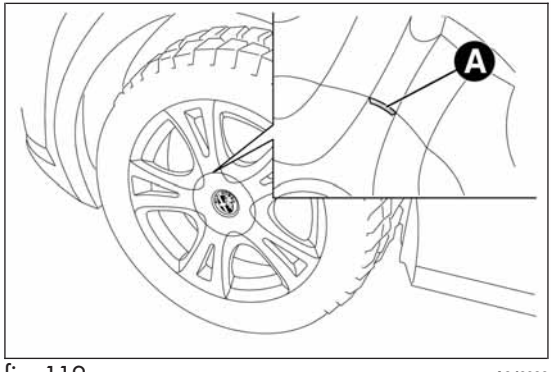

fig. 119 A0J0238

❒ alert any bystander that the car is about to be raised; all persons should be kept away from the car and nobody must touch it until it has been lowered;

❒ fit handle D fig. 121 into the housing in device A, operate the jack and raise the car until the wheel is a few centimetres from the ground;

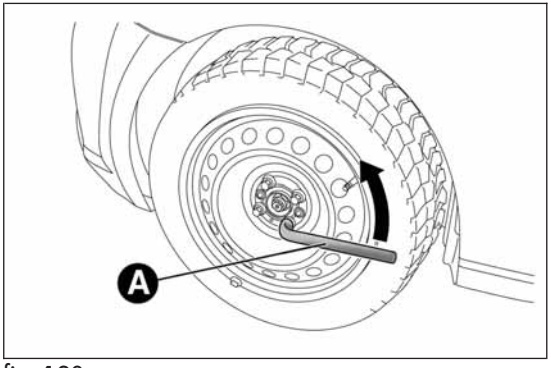

fig. 120 A0J0106

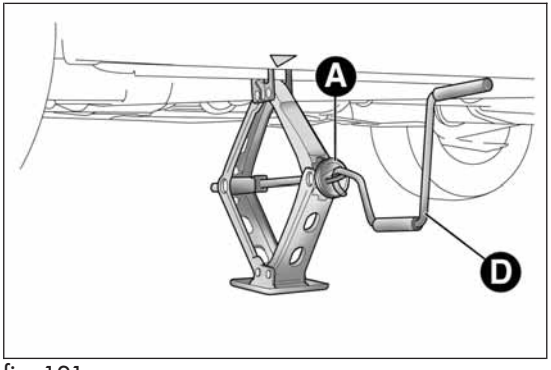

fig. 121 A0J0062

❒ make sure the contact surfaces between space-saver wheel and hub are clean so that the fastening bolts will not come loose;

❒ fit the space-saver spare wheel by inserting the first bolt for two threads into the hole closest to the valve;

❒ take the wrench A fig. 120 and fully tighten the fixing bolts;

❒ operate the jack handle D fig. 121 to lower the vehicle. Then extract the jack;

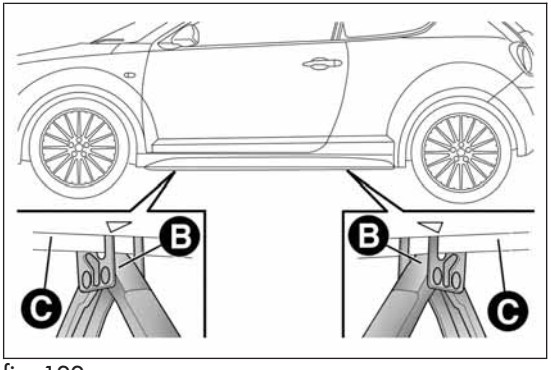

fig. 122 A0J0061

❒ use the wrench A fig. 120 provided to fully tighten the bolts in a criss-cross fashion as per the numerical sequence illustrated in fig. 123;

❒ when replacing an alloy wheel it is advisable to place it upside down, with the aesthetic part facing upwards.

Visit Alfa Romeo Authorized Services as soon as possible to check the correct tightening of the main wheel bolts.

Restore the standard wheel as soon as possible, because, once placed in the associated compartment, the luggage compartment load platform is rendered uneven as the standard wheel is larger than the space-saver wheel.

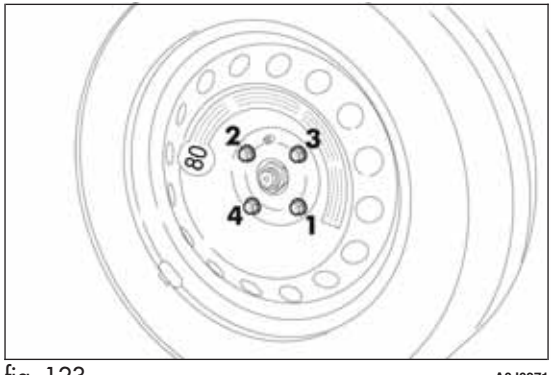

fig. 123 A0J0271

REMOVING THE SUBWOOFER (versions with Bose HI-FI system)

(for versions/markets, where provided)

IMPORTANT The following procedure only applies to cars equipped with Bose HI-FI systems with subwoofer (for versions/markets, where provided).

Subwoofer and space-saver spare wheel

On these versions, the tools for replacing the wheel are located in a dedicated bag in the luggage compartment.

Proceed as follows to remove the Subwoofer:

❒ open the luggage compartment, pull tab A fig. 116 and lift up the mat;

❒ unscrew locking device A fig. 124, raise the subwoofer and then remove connection cable B from the Velcro C;

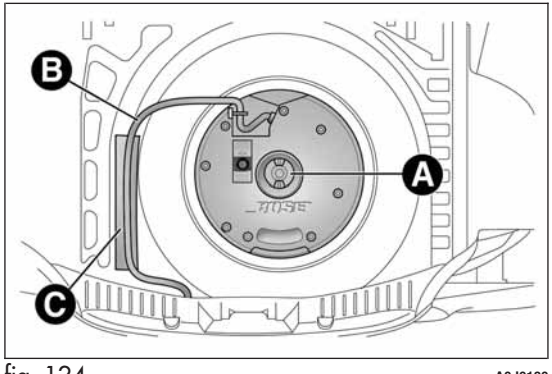

fig. 124 A0J0180

❒ rest the Subwoofer on one side in the luggage compartment, remove the container and take the space-saver wheel;

❒ replace the wheel as described previously.

At the end of the operation:

❒ reposition the container (with the arrow pointing forwards) in its housing and place the subwoofer on top of it, taking care to arrange it according to the indications on the container (fig. 125) so that the word "BOSE" is read in the correct position;

❒ rest cable B fig. 124 on the Velcro C to avoid pinching it;

❒ screw in locking device A, and finally lower the luggage compartment mat.

Subwoofer and "Fix&Go Automatic Kit"

Locating the Automatic Fix&Go Kit:

❒ open the luggage compartment, pull tab A fig. 116 and lift up the mat;

❒ take the "Fix&Go Automatic Kit" located on the left side of the luggage compartment (fig. 126);

❒ inflate the wheel (see paragraph entitled "Fix&Go Automatic Kit").

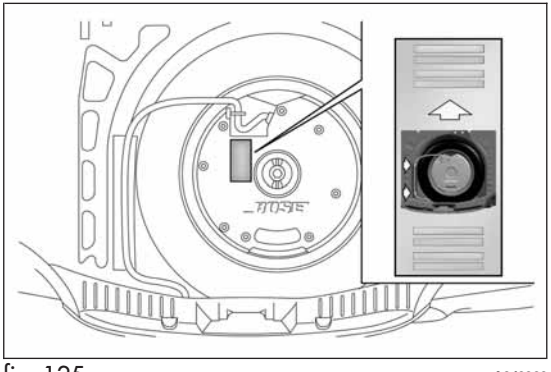

fig. 125 A0J0260

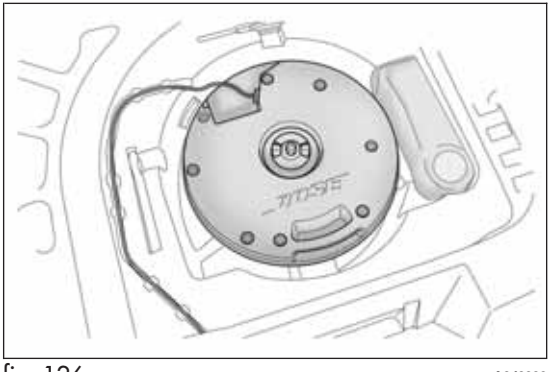

fig. 126 A0J0239

REFITTING THE WHEEL

Following the procedure described previously, raise the car and remove the small spare wheel.

Proceed as follows:

❒ make sure the contact surfaces between standard wheel and hub are clean so that the fastening bolts will not come loose;

❒ **for versions with steel rims**: fix the hub cap on the rim, aligning the crescent hole with the bolt you have fitted, then insert the other 4 bolts;

❒ tighten the retaining bolts using wrench A fig. 120;

❒ lower the car and remove the jack;

❒ use wrench A fig. 120 to fully tighten the bolts, following the sequence illustrated in

❒ **for versions with alloy rims with hub cap**: align the pin on the cap with the housing on the rim.

At the end of operation

❒ stow the space-saver spare wheel in the compartment provided in the boot;

❒ insert the jack and the other tools in the container;

❒ arrange the container and tools on the space-saver wheel;

❒ correctly reposition the boot mat.

"Fix&Go Automatic" kit

This is located in the luggage compartment.

The kit container also contains a screwdriver and the tow hook.
The kit also contains:

❒ a bottle fig. 127 containing sealer and fitted with: filling tube B and adhesive label C with the wording "max. 80 km/h" to be placed in a clearly visible position (e.g. on the dashboard) after repairing the tyre;

❒ a compressor D complete with pressure gauge and connectors;

❒ an information leaflet fig. 128, providing instructions for using the kit correctly. This booklet should be given to the persons charged with handling the tyre treated with this kit;

❒ a pair of gloves located in the side compartment of the compressor;
❒ adapters for inflating different elements.

IMPORTANT The sealing liquid is suitable for use at temperatures in the range from −20°C to +50°C. The sealant has an expiry date.

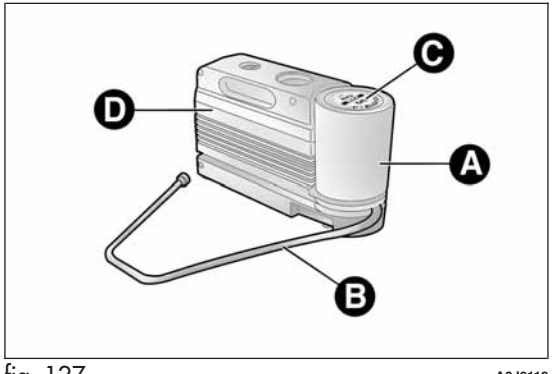

fig. 127 A0J0112

Give the leaflet to the technicians who will be handling the tyre that was treated using the "Fix&Go Automatic" kit.

In the event of a puncture caused by foreign bodies, the kit may be used to repair tyres showing damage on the track or shoulder up to max 4 mm diameter.

Holes and damage on the tyre side walls cannot be repaired. Do not use the tyre quick repair kit if the tyre is damaged as a result of driving with it deflated.

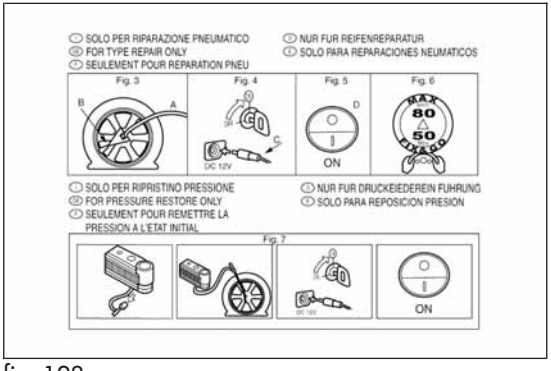

fig. 128 A0J0113

Repairs are not possible in the case of damage to the wheel rim (bad groove distortion causing air loss). Do not remove foreign bodies (screws or nails) from the tyre.

Never operate the compressor for longer than 20 consecutive minutes. Risk of overheating. The kit is not suitable for definitive repairs, so the repaired tyres may only be used temporarily.

Dispose of the bottle and the sealant liquid properly. Have the sealing fluid and the cylinder disposed of in compliance with national and local regulations.

The bottle contains ethylene glycol and latex: it may cause an allergic reaction. It is harmful if swallowed. It is irritant for the eyes in case of contact. There could be a reaction in the event of inhalation or contact. Avoid contact with the eyes, skin and clothes. In the event of contact, rinse immediately with plenty of water. If ingested, do not induce vomiting. Rinse out your mouth, drink large quantities of water and seek immediate medical attention. Keep out of the reach of children. The product must not be used by asthmatics. Do not inhale the vapours during insertion and suction. Call a doctor immediately if allergic reactions are noted. Store the bottle in the specific compartment, away from sources of heat. The sealant fluid has an expiry date. Replace the bottle containing out-of-date sealant fluid.

INFLATION PROCEDURE

Wear the protective gloves provided with the kit.

Proceed as follows:

❒ engage the handbrake, unscrew the tyre valve cap, take out the flexible filler pipe A fig. 129 and tighten the ring nut B on the tyre valve;

❒ make sure that switch A fig. 130 for the compressor is in position 0 (off), start the engine, insert the plug A fig. 131 into the power socket on the central tunnel and switch on the compressor by bringing switch A fig. 130 to position I (on);

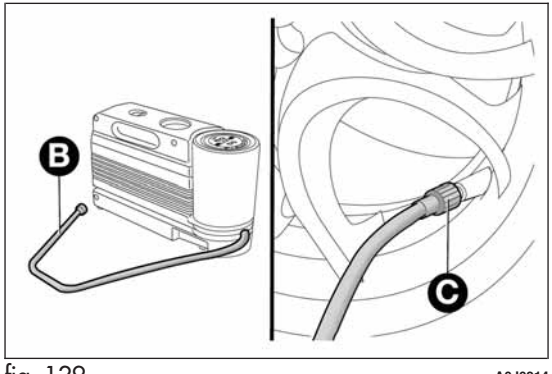

fig. 129 A0J0214

❒ inflate the tyre to the pressure indicated in the "Wheels" paragraph in the "Technical specifications" section. In order to obtain a more precise reading, check the pressure value on pressure gauge B fig. 130 with the compressor off;

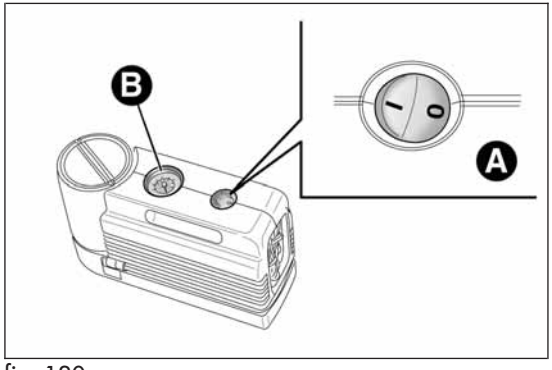

fig. 130 A0J0114

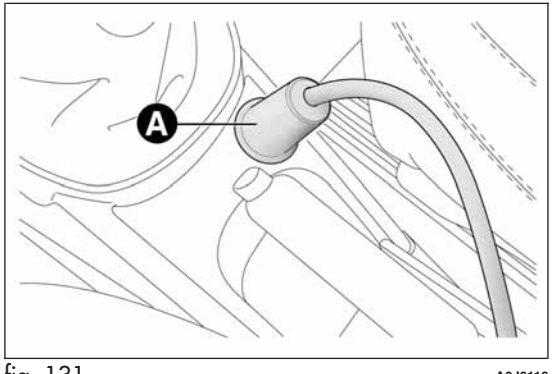

fig. 131 A0J0116

- if after five minutes it is still impossible to reach at least 1.8 bar, disengage the compressor from the valve and power socket, then move the car forwards by approx. ten metres in order to distribute the sealing fluid inside the tyre evenly, then repeat the inflation operation;
- if you still cannot obtain a pressure of at least 1.8 bar within 5 minutes from the compressor switching on, do not drive off and contact Alfa Romeo Authorized Services;
- after driving for about 10 minutes, stop and check the tyre pressure again; remember to put the handbrake on;
- if a pressure value of at least 1.8 bar is detected, restore the correct pressure (with the engine running and the handbrake engaged), resume driving and drive with great care to Alfa Romeo Authorized Services.

Apply the adhesive label where it can be easily seen by the driver as a reminder that the tyre has been treated with the quick repair kit. Drive carefully, particularly on bends. Do not exceed 80 km/h. Do not accelerate or brake suddenly.

If the pressure has fallen below 1.8 bar, do not drive any further: the Fix&Go Automatic quick tyre repair kit cannot guarantee the correct hold because the tyre is too damaged. Contact Alfa Romeo Authorized Services.

Inform the dealership that the tyre has been repaired using the quick tyre repair kit. Give the leaflet to the technicians who will be handling the tyre that was repaired using the quick repair kit.

CHECKING AND RESTORING TYRE PRESSURE

The compressor can also be used to check and, if necessary, adjust the tyre pressure.

Release quick connector A fig. 132 and connect it directly to the valve of the tyre to be inflated.

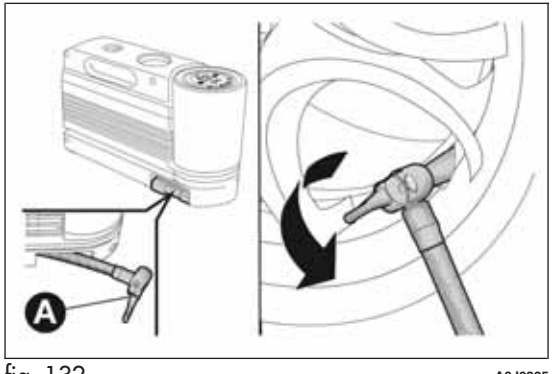

fig. 132 A0J0225

REPLACING THE BOTTLE

Proceed as follows:

❒ release connector A fig. 133 and disconnect tube B;

❒ turn the bottle to be replaced anticlockwise and raise it;

❒ fit the new bottle and turn it clockwise;

❒ insert connector A and tube B in their housings.

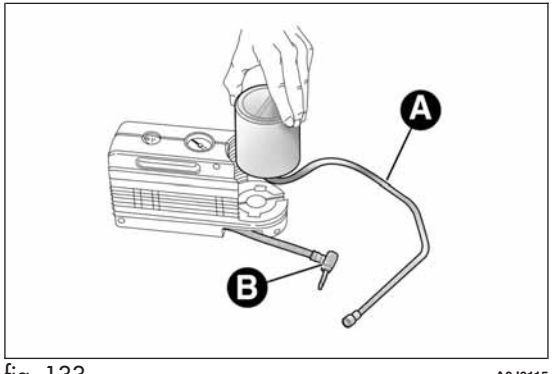

fig. 133 A0J0115

CHANGING A BULB

GENERAL INSTRUCTIONS

❒ Before changing a bulb check the contacts for oxidation;

❒ blown bulbs must be replaced with others of the same type and power;

❒ after replacing a headlight bulb, always check its alignment;

❒ when a light is not working, check that the corresponding fuse is intact before changing a bulb. For the location of fuses, refer to the paragraph "Replacing fuses" in this section.

Halogen bulbs must be handled holding the metal part only. Touching the transparent part of the bulb with your fingers may reduce the intensity of the emitted light and even reduce the lifespan of the bulb. In case of accidental contact, wipe the bulb with a cloth moistened with alcohol and let the bulb dry.

Modifications or repairs to the electric system that are not carried out properly or do not take the system technical specifications into account can cause malfunctions leading to the risk of fire.

Halogen bulbs contain pressurised gas which may cause small fragments of glass to be projected outwards if the bulb is broken.

IMPORTANT When the weather is cold or damp or after heavy rain or washing, the surface of headlights or rear lights, may steam up and/or form drops of condensation on the inside. This is a natural phenomenon due to the difference in temperature and humidity between the inside and the outside of the glass which does not indicate a fault and does not compromise the normal operation of lighting devices. The mist disappears quickly when the lights are turned on, starting from the centre of the diffuser, extending progressively towards the edges.

TYPES OF BULBS

The car has the following light bulbs:

Glass bulbs: (type A) they are press-fitted. Pull to extract.

Bayonet-type bulbs: (type B) to remove from its holder, press the bulb and turn it anti-clockwise, then extract it.

Tubular bulbs: (type C) release them from their contacts to remove.

Halogen bulbs: (type D) to remove the bulb, release the clip holding the bulb in place.

Halogen bulbs: (type E) to remove the bulb, release the clip holding the bulb in place.

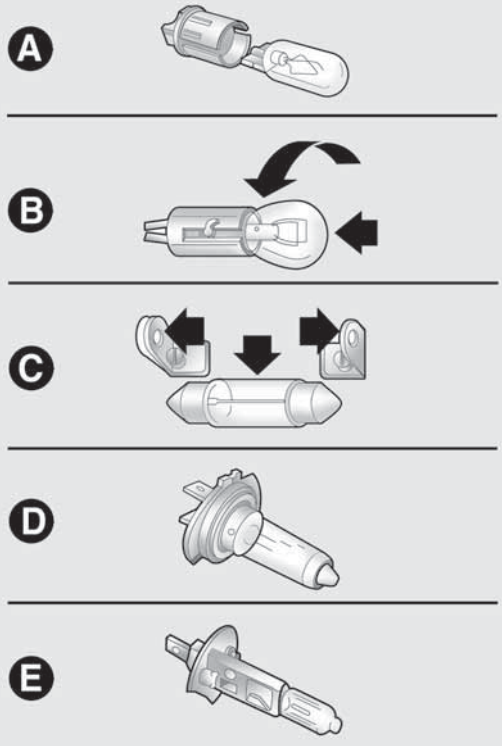

Bulbs	Type	Power	Re. Figure
Front side lights/Daytime running lights	W21/5W	5/21W	A
Rear side lights	LED	–	–
Dipped headlights	H7	55W	D
Main beam headlights	H7	55W	D
Front direction indicators	24W module	24W	B
Rear direction indicators	P21W	21W	B
Side direction indicators	WY5W	5W	A
Brake light	LED	–	–
3rd brake light	LED	–	–
Number plate light	W5W	5W	A
Fog lights	H1	55W	E
Rear fog lights	P21W	21W	B
Reversing lights	P21W	21W	B
Front roof light	C10W	10W	C
Luggage compartment roof light	W5W	5W	A
Glove compartment light	C5W	5W	C
Puddle light	W5W	5W	A

REPLACING EXTERIOR BULBS

FRONT LIGHT CLUSTERS

These contain the bulbs for the side lights/daytime running lights (DRL), dipped beams, main beams and direction indicators. The bulbs are arranged as follows fig. 134:

A Side lights/daytime running lights and main beam headlights

B Dipped headlights

C Direction indicators

SIDE LIGHTS/DAYTIME RUNNING LIGHTS (DRL)

To change the bulb, proceed as follows:

❒ remove cover A fig. 134;

❒ remove bulb holder B fig. 135, remove the bulb and replace it;

❒ refit bulb holder B, making sure it is correctly secured;

❒ refit cover A fig. 134.

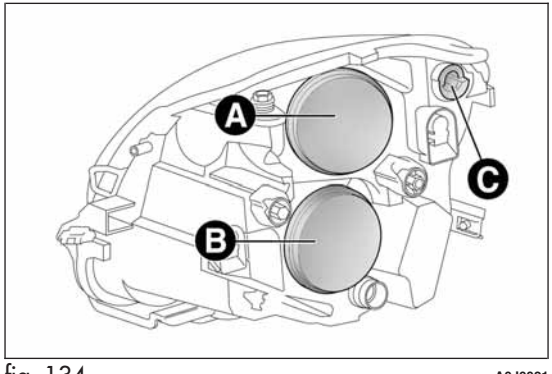

fig. 134 A0J0021

MAIN BEAM HEADLIGHTS

To change the bulb, proceed as follows:

❒ remove cover A fig. 134;

❒ remove bulb holder C fig. 135, remove the bulb and replace it;

❒ refit the bulb holder, making sure it is correctly secured;

❒ refit cover A fig. 134.

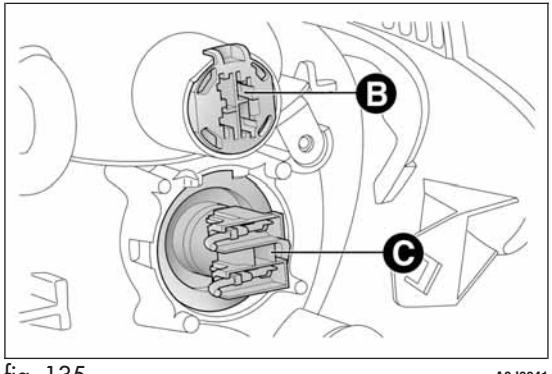

fig. 135 A0J0041

DIPPED HEADLIGHTS

With incandescent bulbs

To change the bulb, proceed as follows:

❒ remove cover B fig. 134;

❒ remove cover A fig. 136 protecting the bulb;

❒ extract the bulb and replace it;

❒ refit the bulb holder, making sure it is correctly secured;

❒ refit cover B fig. 134.

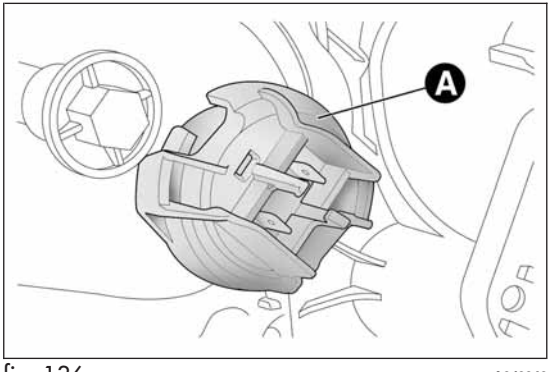

fig. 136 A0J0040

DIRECTION INDICATORS

Front

To replace the bulb, take wrench A fig. 137 (located in the document holder), insert it in housing B and turn the bulb holder anticlockwise.

Extract the bulb and replace it.

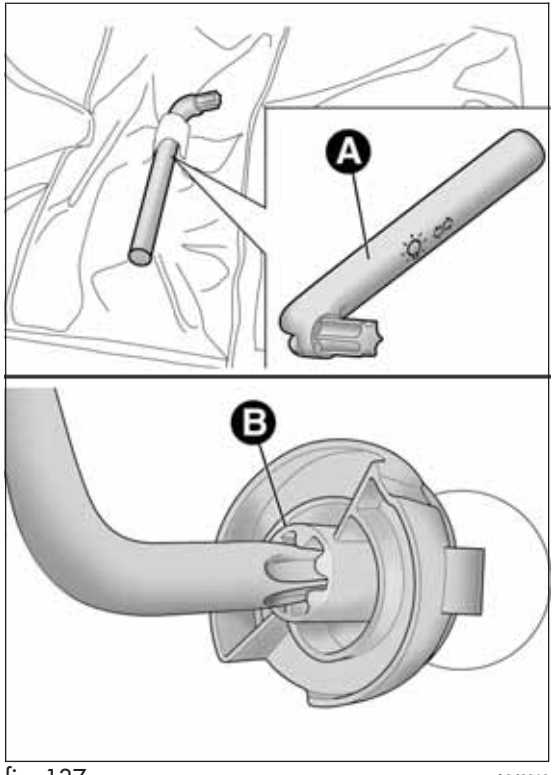

fig. 137 A0J0018

Side

To change the bulb, proceed as follows:

❒ operate lens A fig. 138 in order to compress clip B, then pull the unit outwards;

❒ turn bulb holder C anticlockwise, remove the bulb and replace it;

❒ refit bulb holder C in the lens, turning it clockwise;

❒ refit the unit, making sure that internal clip B clicks into place.

FOG LIGHTS

(for versions/markets, where provided)

For the replacement of these bulbs, contact Alfa Romeo Authorized Services.

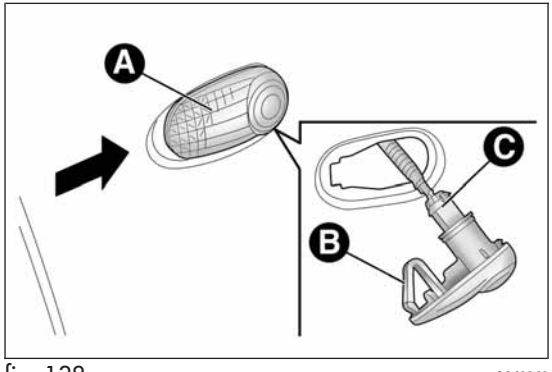

fig. 138 A0J0042

REAR LIGHT CLUSTERS

To access the light cluster, move the luggage compartment side trim (see fig. 139). The rear light cluster contains the bulbs for side lights, direction indicators and brake lights.

SIDE LIGHTS/BRAKE LIGHTS

These are LED lights. Contact Alfa Romeo Authorized Services to replace these lights.

DIRECTION INDICATORS

To replace the bulb, lift the luggage compartment side trim, turn bulb-holder A fig. 139 and replace the bulb.

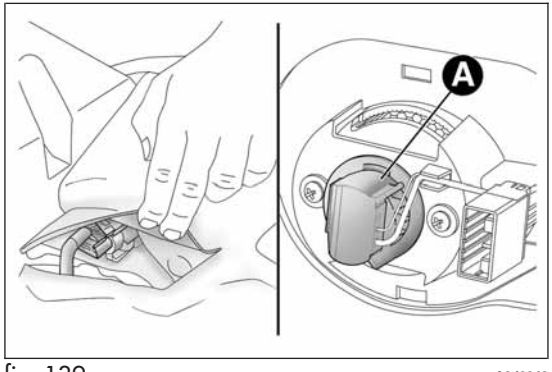

fig. 139 A0J0043

REAR FOG LIGHT/REVERSING LIGHT

To replace the rear fog light A fig. 140 or reversing light B fig. 140 bulbs, contact Alfa Romeo Authorized Services.

3rd BRAKE LIGHTS

These are located in the tailgate and are LED bulbs. For replacement, contact Alfa Romeo Authorized Services.

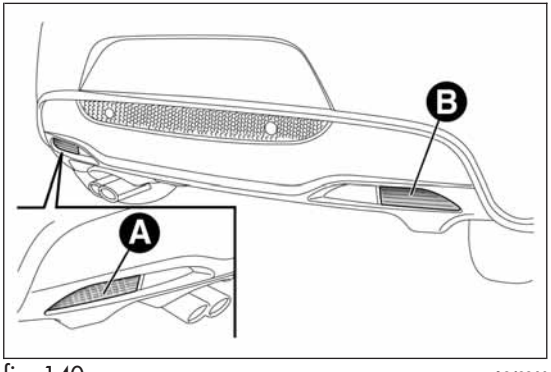

fig. 140 A0J0044

NUMBER PLATE LIGHTS

To replace the bulbs proceed as follows:

❒ remove the number plate light units fig. 141;

❒ turn the bulb holder B fig. 142 anticlockwise, extract the bulb C and replace it;

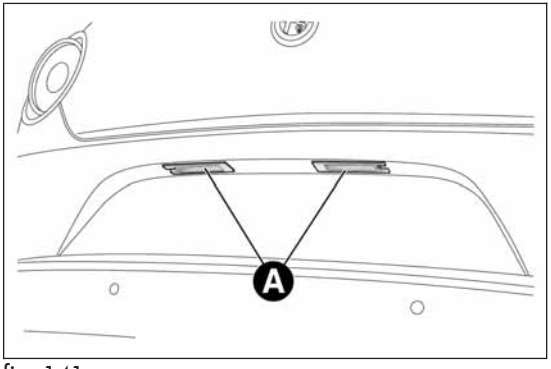

fig. 141 A0J0046

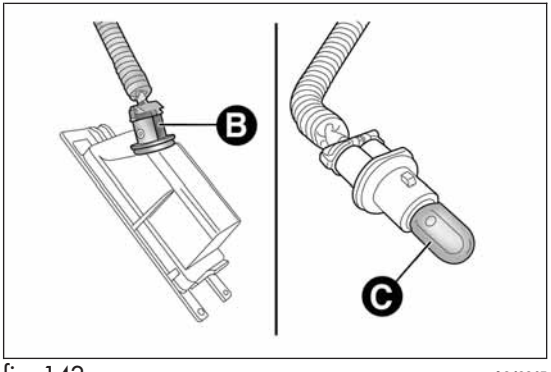

fig. 142 A0J0045

REPLACING INTERIOR BULBS

FRONT ROOF LIGHT

To change the bulb, proceed as follows:

❒ remove the roof light A fig. 143 working at the points indicated by the arrows;

❒ open the flap B fig. 144 and replace the bulbs C releasing them from the side contacts. Make sure that the new bulbs are correctly secured between the contacts;

❒ reclose the flap B fig. 144 and fix the roof light A fig. 143 in its housing making sure that it is locked.

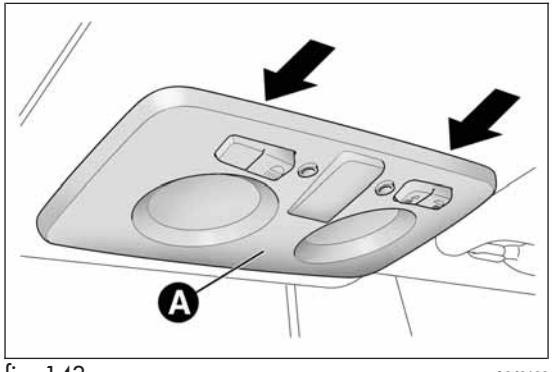

fig. 143 A0J0120

LUGGAGE COMPARTMENT ROOF LIGHT

To change the bulb, proceed as follows:

❒ open the luggage compartment and extract the roof light A fig. 145 working in the point shown by the arrow;

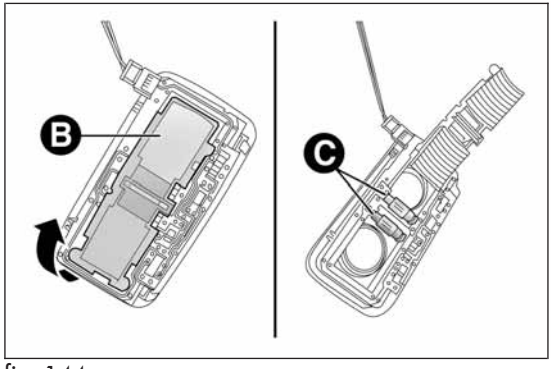

fig. 144 A0J0121

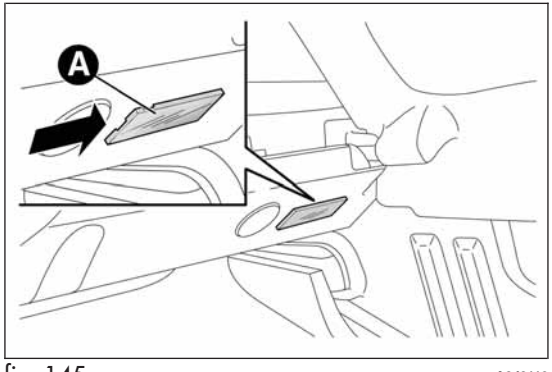

fig. 145 A0J0119

❒ open the protection B fig. 146 and replace the bulb;

❒ re-close the protection B on the lens;

❒ refit the roof light A fig. 145 by inserting it in its correct position firstly on one side and then pressing on the other until it clicks into place.

GLOVE COMPARTMENT LIGHT

To change the bulb, proceed as follows:

❒ open the glove compartment and extract the light A fig. 147;

❒ replace bulb B, releasing it from the side contacts and making sure the new bulb is correctly fastened between the contacts.

COURTESY LIGHT

(for versions/markets, where provided)

To change the bulb, proceed as follows:

❒ lower the sun visor and remove courtesy light A fig. 148, applying leverage at the point indicated by the arrow;

❒ remove protection B, releasing it from tabs C, then replace bulb D fig. 149 by pulling it outwards and releasing it from the side contacts;

❒ insert the new bulb, making sure that it is positioned correctly and is secured between the contacts;

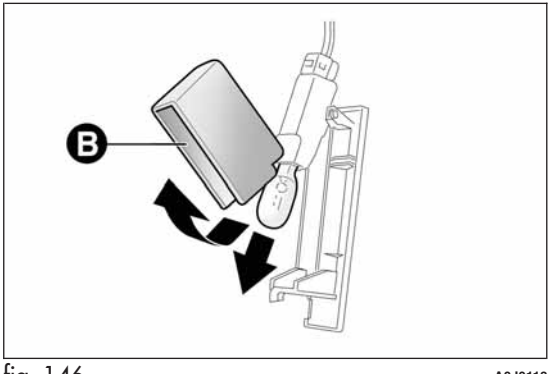

fig. 146 A0J0118

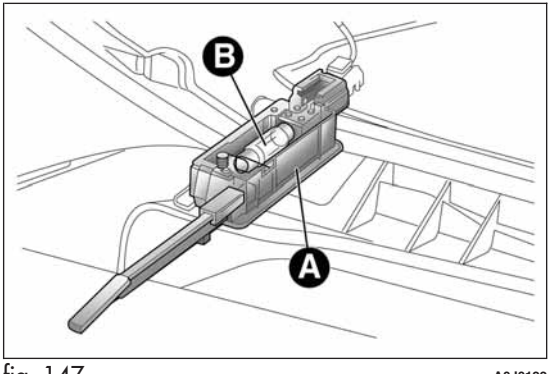

fig. 147 A0J0122

❒ refit protection B fig. 148, inserting it correctly between tabs C;

❒ refit the roof light, inserting it first from side E fig. 149, then press on the other side until you hear tab F click into place.

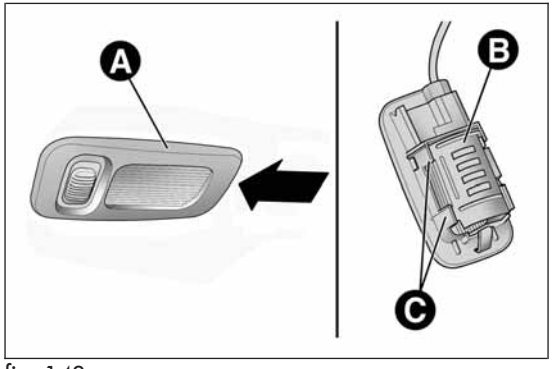

fig. 148 A0J0123

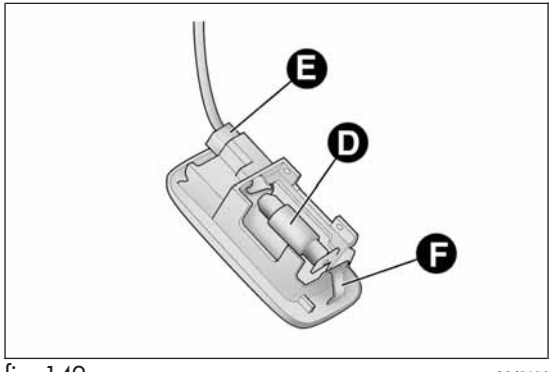

fig. 149 A0J0124

PUDDLE LIGHT

To change the bulb, proceed as follows:

❒ open the door and remove the roof light by pushing on clip A fig. 150 with a screwdriver;

❒ press the sides of protection B fig. 150 near the two fixing pins and replace bulb C;

❒ refit the protection, locking the two fixing pins;

❒ refit the roof light, inserting it first from side D and then pressing on the other side until you hear the clip click into place.

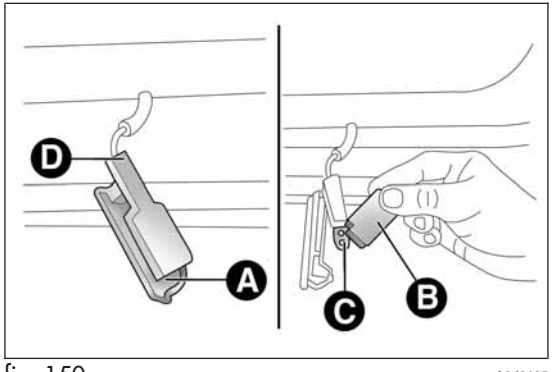

fig. 150 A0J0125

REPLACING FUSES

GENERAL INFORMATION

Fuses protect the electrical system: they intervene (blow) in the event of a failure or improper intervention on the system.

When a device does not work, check the condition of its protection fuse: the filament A fig. 151 must be intact.

If it is not, replace the blown fuse with another with the same amperage (same colour).

B = undamaged fuse.

C = fuse with damaged filament.

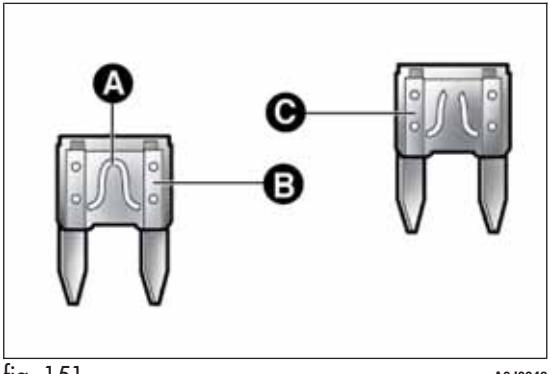

fig. 151 A0J0048

Never replace a fuse with metal wires or anything else.

Contact Alfa Romeo Authorised Services should the fuse blow again.

Never replace a fuse with another with a higher amp rating; DANGER OF FIRE.

If a general protection fuse (MAXI-FUSE, MEGA-FUSE, MIDI-FUSE) blows, contact Alfa Romeo Authorised Services.

Before replacing a fuse, make sure that the ignition key has been removed and that all the other services are switched off and/or disengaged.

Contact Alfa Romeo Authorised Services if a safety system (airbags, brakes), power unit system (engine, gearbox) or steering system general protection fuse blows.

FUSE LOCATION

Fuses are grouped together in three fuse boxes located in the engine compartment, dashboard and luggage compartment.

Engine compartment fuse box

This is located next to the battery fig. 153: to access the fuses, undo screws A fig. 152 and remove cover B.

The number identifying the electrical component corresponding to each fuse is on the back of the cover.

After replacing the fuse, make sure you close cover B on the junction unit.

If it is necessary to wash the engine compartment, take care not to directly hit the junction unit and the window wiper motors with the water jet.

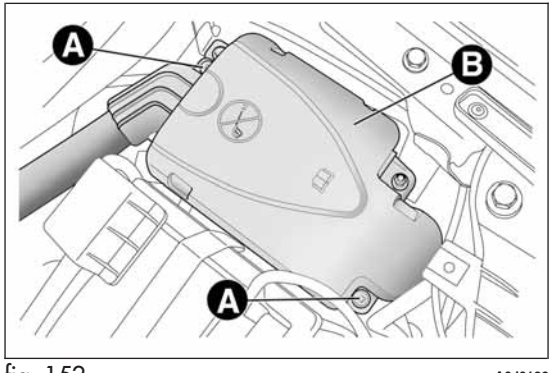

fig. 152 A0J0126

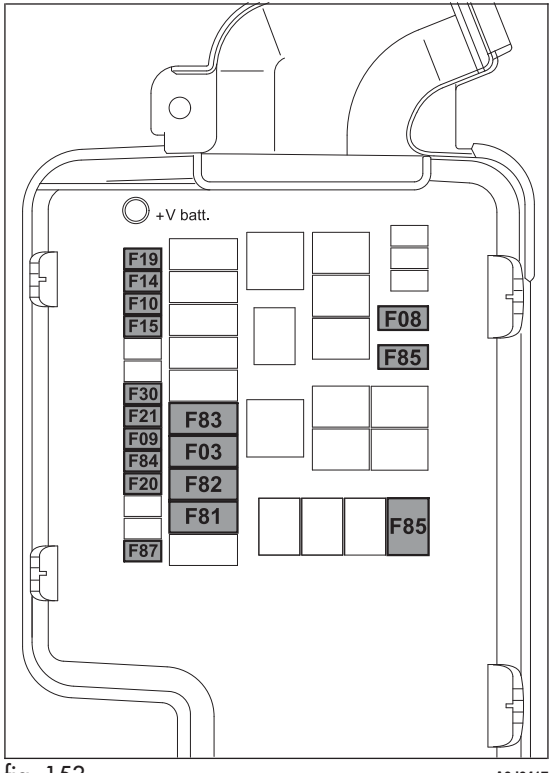

fig. 153 A0J0417

Dashboard fuse box

To access the fuses fig. 155, lower lid A fig. 154, grip cover B with one hand in the area shown in the figure and remove it in the direction shown by the arrow, in order to release first the inner retainers C and then the tabs D.

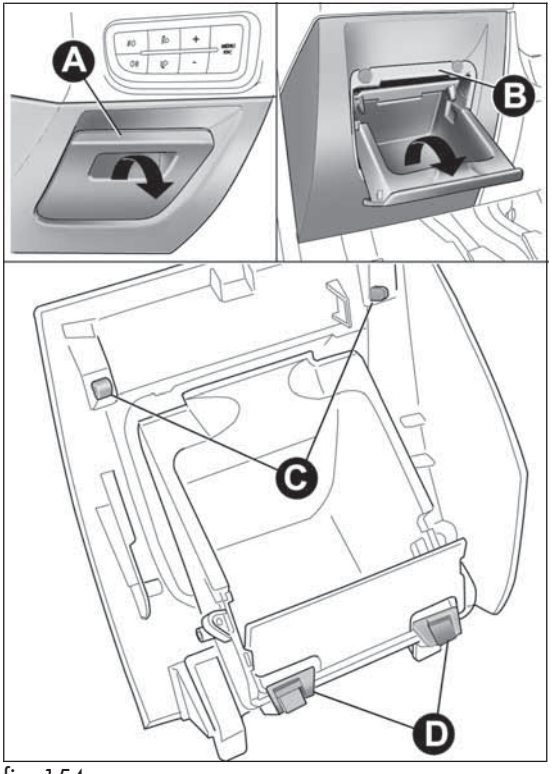

fig. 154 A0J0334

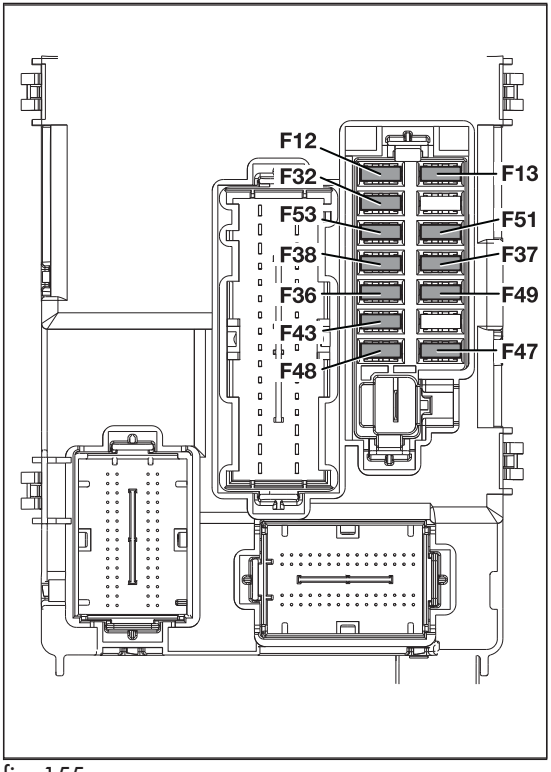

fig. 155 A0J0205

Luggage compartment fuse box

To access the fuse box fig. 157 located on the left side of the luggage compartment, open the relevant inspection lid (as illustrated in fig. 156).

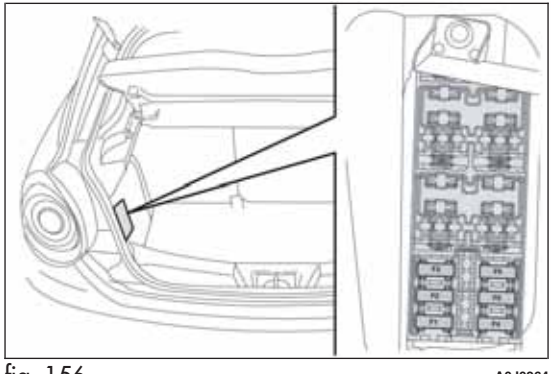

fig. 156 A0J0264

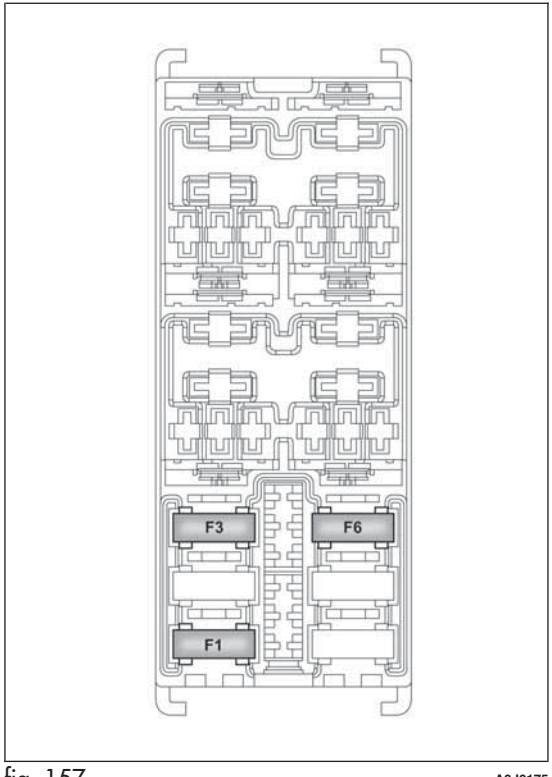

fig. 157 A0J0175

ENGINE COMPARTMENT FUSE BOX
fig. 153

DEVICE PROTECTED	FUSE	AMPS
Starter	F03	20
Passenger compartment electric fan	F08	40
Additional heater (Turbo TwinAir 105 HP and 1.3 JTD_{M-2} 85 HP versions)	F09	5
Two-tone horns	F10	15
Main beam headlights	F14	15
Additional heater (PTC 1)	F15	30
Air conditioning compressor	F19	7,5
Heated rear windscreen, defrosting system	F20	30
Electric fuel pump in tank	F21	15
Fog lights	F30	15
Additional heater (PTC2)	F81	60
Additional heater (PTC1)	F82	40
Additional heater (PTC2)	F82	50
Free	F83	–
HI-FI sound system (control units, Bassbox speaker) mechanical gearbox setup	F84	20
Power socket on tunnel	F85	15
Electric door mirror demisters, demisters on windscreen jets, relay switch coil for heated windscreen	F87	7,5

INSTRUMENT PANEL FUSE BOX
fig. 155

DEVICE PROTECTED	FUSE	AMPS
Available	F12	–
Headlamp alignment corrector	F13	5
INT/A relay for engine compartment junction unit	F31	5
EOBD diagnosis port supply, radio, **Bluetooth**®, radionavigator (where provided), alarm siren; alarm volumetric sensors, electric fan, TPMS, electric mirror controls, climate control system controls	F36	15
Brake light switch (NO), instrument panel node, headlight alignment corrector	F37	5
Doors and luggage compartment central locking	F38	15
Windscreen/rear window washer pump	F43	20
Electric window (driver side)	F47	20
Electric window (passenger side)	F48	20
Parking sensors, control lighting, electrochromic mirror, rain/dusk sensor, soft top, TMPS; cigar lighter lighting, SBR system panel	F49	5
Climate control system controls, radio preparation system; **Bluetooth**®, brake light switch (NC), clutch switch, reverse switch, flow meter (diesel versions), water in diesel filter sensor (diesel versions)	F51	5
Instrument Panel Node	F53	5

LUGGAGE COMPARTMENT JUNCTION UNIT

fig. 157

DEVICE PROTECTED	FUSE	AMPS
Electric roof opening system	F1	20
Luggage compartment power socket	F3	15
Front seat heater	F6	15

BATTERY RECHARGING

IMPORTANT The battery recharging procedure is given as information only. Contact Alfa Romeo Authorized Services to carry out this operation.

IMPORTANT After turning the ignition key to STOP, wait at least 1 minute before disconnecting the battery power supply.

We recommend recharging the battery slowly for approximately 24 hours at low amperage. Charging for a longer time may damage the battery.

VERSIONS WITHOUT Start&Stop SYSTEM

(for versions/markets, where provided)

Charge the battery as follows:

❒ disconnect the negative battery terminal;

❒ connect the charger cables to the battery terminals, observing the polarity;

❒ turn on the battery charger;

❒ when it is recharged, turn the charger off before disconnecting it from the battery;

❒ reconnect the negative battery terminal.

VERSIONS WITH Start&Stop SYSTEM

Charge the battery as follows:

❒ disconnect the connector A fig. 158 (pressing the button B) from the sensor C monitoring the battery conditions, on the negative pole D of the battery;

❒ connect the positive cable (+) of the battery charger to the battery positive pole (+);

❒ connect the negative cable (−) of the battery charger to the post D of the battery negative pole (−);

❒ turn on the battery charger;

❒ when it is recharged, turn the charger off before disconnecting it from the battery;

❒ reconnect the connector A to the sensor C of the battery.

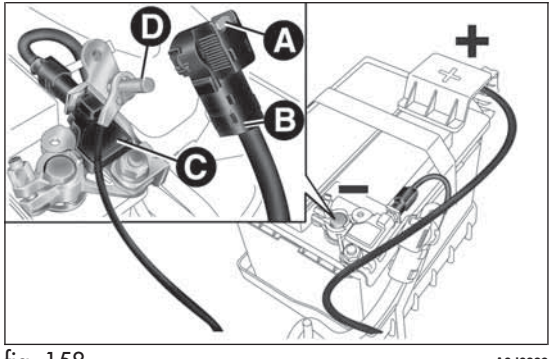

fig. 158 A0J0389

RAISING THE CAR

If you need to lift the car contact Alfa Romeo Authorized Services, who will be equipped with a workshop lift.

IMPORTANT Be careful when positioning the arm of the lift for versions with side skirts.

TOWING THE CAR

The tow ring provided with the car is housed in the tool box in the boot.

ATTACHING THE TOW HOOK

Release the plug A by pressing the lower part, take the tow hook B from its housing in the tool support and tighten it securely on the front threaded pin (fig. 159) or on the rear threaded pin (fig. 160).

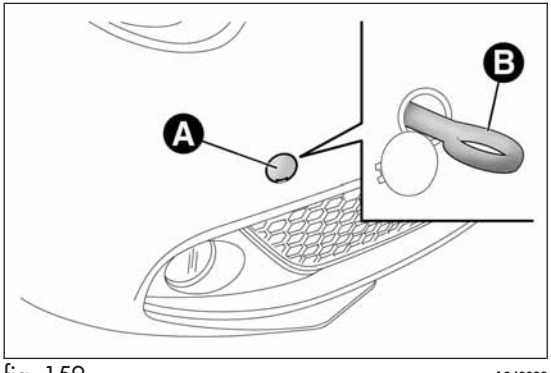

fig. 159 A0J0038

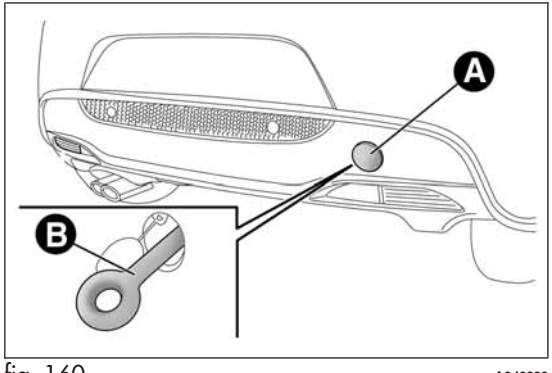

fig. 160 A0J0039

Before beginning to tow, turn the ignition key to MAR and then to STOP, without extracting it The steering column will automatically lock when the key is removed and the wheels cannot be steered.

Remember that whilst towing it is necessary to exert a greater force when steering and braking because the brake servo and electro-mechanical power steering will be inoperative. Do not use wires for towing. Do not jerk. Be careful not to damage parts in contact with the car while towing. When towing the vehicle, you must comply with all specific traffic regulations and adopt an appropriate driving behaviour. Do not start the engine while towing the car. Clean the threaded seat carefully before fastening the hook. Make sure that the hook is fully fastened in the housing before towing the car.

The front and rear tow hooks should be used only for emergencies on the road. You are allowed to tow the vehicle for short distances using an appropriate device in accordance with the highway code (a rigid bar), to move the vehicle on the road in readiness for towing or transport via a breakdown vehicle. Tow hooks MUST NOT be used to tow vehicles off the road or where there are obstacles and/or for towing operations using cables or other non-rigid devices. Respecting the above conditions, towing must take place with the two vehicles (one towing, the other towed) aligned as much as possible along the same centre line.

SCHEDULED SERVICING

Correct servicing is essential in guaranteeing a long life for the car under the best conditions.

For this reason, Alfa Romeo has planned a series of checks and services at fixed distance intervals and, for versions/markets, where provided, at fixed time intervals, as described in the Scheduled Servicing Plan.

Regardless of the above, it is always necessary to carefully follow the instructions in the Scheduled Servicing Plan (e.g. periodically check level of liquids, tyre pressure, etc.).

Scheduled Servicing is carried out at Alfa Romeo Authorised Services according to a set time schedule or kilometres/miles intervals. If, during each operation, in addition to the ones scheduled, the need arises for further replacements or repairs, these may be carried out only with your explicit agreement. If your car is used frequently for towing, the interval between one service operation and the next should be reduced.

WARNING

The Scheduled Services intervals are set out by the Manufacturer. Failure to comply with the schedule may invalidate the warranty.

It is advisable to inform Alfa Romeo Authorized Services of any small faults without waiting for the next scheduled service.

For versions equipped with specific supply (e.g. LPG, Alfa TCT) and/or trim level, in addition to what is described in the following Scheduled Servicing Plan, refer to the relevant additional items in the dedicated supplements.

SCHEDULED SERVICING PLAN

PETROL VERSIONS

The checks listed in the Scheduled Servicing Plan, after reaching 120,000 km/8 years, must be cyclically repeated starting from the first interval, thus following the same intervals as before.

Thousands of miles	**9**	**18**	**27**	**36**	**45**	**54**	**63**	**72**	**81**	**90**
Thousands of kilometres	**15**	**30**	**45**	**60**	**75**	**90**	**105**	**120**	**135**	**150**
Years	**1**	**2**	**3**	**4**	**5**	**6**	**7**	**8**	**9**	**10**
Check tyre condition/wear and adjust pressure, if necessary. Check "Fix&Go Automatic" kit recharge expiry date	●	●	●	●	●	●	●	●	●	●
Check operation of lighting system (headlights, direction indicators, hazard warning lights, luggage compartment, passenger compartment, glove compartment, instrument panel warning lights, etc.)	●	●	●	●	●	●	●	●	●	●
Check and, if necessary, top up fluid levels (engine coolant, hydraulic clutch/brakes, screen washer, battery, etc.)	●	●	●	●	●	●	●	●	●	●
Check exhaust emissions/smokiness	●	●	●	●	●	●	●	●	●	●
Use the diagnosis socket to check supply/engine management system operation, emissions and, for versions/markets, where provided, engine oil degradation	●	●	●	●	●	●	●	●	●	●
Visually inspect condition of: exterior bodywork, underbody protection, pipes and hoses (exhaust, fuel system, brakes), rubber elements (boots, sleeves, bushes, etc.)	●		●		●		●		●	
Check windscreen/rear window wiper blade position/wear	●		●		●		●		●	
Check operation of windscreen wiper/washer system and adjust jets, if necessary	●		●		●		●		●	
Check cleanliness of bonnet and luggage compartment locks, as well as cleanliness and lubrication of linkages		●		●		●		●		●

Thousands of miles	**9**	**18**	**27**	**36**	**45**	**54**	**63**	**72**	**81**	**90**
Thousands of kilometres	**15**	**30**	**45**	**60**	**75**	**90**	**105**	**120**	**135**	**150**
Years	**1**	**2**	**3**	**4**	**5**	**6**	**7**	**8**	**9**	**10**
Check handbrake lever travel and adjust, if necessary		●		●		●		●		●
Visually inspect condition and wear of front and rear disc brake pads	●	●	●	●	●	●	●	●	●	●
Visually inspect conditions of toothed timing drive belt (Turbo TwinAir versions excluded)				●						
Visually inspect conditions of the accessory drive belt(s)				●						
Check and, if necessary, top up the Alfa TCT control oil level (for versions/markets, where provided) (1)		●		●		●		●		●
Change engine oil and replace oil filter (2)		●		●		●		●		●
Replace spark plugs (3)		●		●		●		●		●

(1) Check to be carried out every year for cars on the road in countries with particularly severe climates (cold countries).

(2) If the vehicle is used mainly on urban routes or the annual distance travelled is less than 10,000 km, the engine oil and engine oil filter must be changed every year.

(3) For 1.4 Turbo MultiAir versions, to guarantee correct operation and prevent serious damage to the engine, it is essential to proceed as follows: only use spark plugs specifically certified for these engines; all spark plugs should be of the same type and brand (see the "Engine" paragraph in the "Technical specifications" section); strictly comply with the replacement intervals in the Scheduled Servicing Plan. It is advisable to contact an Alfa Romeo Dealership for spark plug replacement.

Thousands of miles	**9**	**18**	**27**	**36**	**45**	**54**	**63**	**72**	**81**	**90**
Thousands of kilometres	**15**	**30**	**45**	**60**	**75**	**90**	**105**	**120**	**135**	**150**
Years	**1**	**2**	**3**	**4**	**5**	**6**	**7**	**8**	**9**	**10**
Replace accessory drive belt(s) (4)								●		
Replacement of toothed timing drive belt (excluding TwinAir Turbo versions) (4)								●		
Replace air cleaner cartridge (5)		●		●		●		●		●
Replace brake fluid		●		●		●		●		●
Replace passenger compartment cleaner (5)	O	●	O	●	O	●	O	●	O	●

(4) Areas that are not dusty: advised maximum mileage 120,000 km. Regardless of the mileage, the belt must be replaced every 6 years.
Dusty areas and/or demanding use of the car (cold climates, town use, long periods of idling): advised maximum mileage 60,000 km. Regardless of the mileage, the belt must be replaced every 4 years.

(5) If the car is used in dusty areas, this cleaner must be replaced every 15,000 km.

(O) Recommended operations

(●) Mandatory operations

DIESEL VERSIONS

The checks listed in the Scheduled Servicing Plan, after reaching 120,000 km/6 years, must be cyclically repeated starting from the first interval, thus following the same intervals as before.

Thousands of miles	**12**	**24**	**36**	**48**	**60**	**72**	**84**	**96**	**108**	**120**
Thousands of kilometres	**20**	**40**	**60**	**80**	**100**	**120**	**140**	**160**	**180**	**200**
Years	**1**	**2**	**3**	**4**	**5**	**6**	**7**	**8**	**9**	**10**
Check tyre condition/wear and adjust pressure, if necessary. Check "Fix&Go Automatic" kit recharge expiry date	●	●	●	●	●	●	●	●	●	●
Check operation of lighting system (headlights, direction indicators, hazard warning lights, luggage compartment, passenger compartment, glove compartment, instrument panel warning lights, etc.)	●	●	●	●	●	●	●	●	●	●
Check and, if necessary, top up fluid levels (engine coolant, hydraulic clutch/brakes, screen washer, battery, etc.)	●	●	●	●	●	●	●	●	●	●
Check exhaust emissions/smokiness	●	●	●	●	●	●	●	●	●	●
Use the diagnosis socket to check supply/engine management system operation, emissions and, for versions/markets, where provided, engine oil degradation	●	●	●	●	●	●	●	●	●	●
Visually inspect condition of: exterior bodywork, underbody protection, pipes and hoses (exhaust, fuel system, brakes), rubber elements (boots, sleeves, bushes, etc.)	●		●		●		●		●	
Check windscreen/rear window wiper blade position/wear	●		●		●		●		●	
Check operation of windscreen wiper/washer system and adjust jets, if necessary	●		●		●		●		●	
Check cleanliness of bonnet and luggage compartment locks, as well as cleanliness and lubrication of linkages		●		●		●		●		●
Check handbrake lever travel and adjust, if necessary		●		●		●		●		●
Visually inspect condition and wear of front and rear disc brake pads	●	●	●	●	●	●	●	●	●	●

Thousands of miles	**12**	**24**	**36**	**48**	**60**	**72**	**84**	**96**	**108**	**120**
Thousands of kilometres	**20**	**40**	**60**	**80**	**100**	**120**	**140**	**160**	**180**	**200**
Years	**1**	**2**	**3**	**4**	**5**	**6**	**7**	**8**	**9**	**10**
Visually inspect condition and tensioning of accessory drive belt(s) (for versions without automatic tensioner only)		●						●		
Change engine oil and replace oil filter (1) (2)										
Replace accessory drive belts (3)						●				
Replace toothed timing drive belt (excluding 1.3 JTD_M versions)(3)						●				
Replace fuel filter cartridge (4)			●			●			●	
Replace air cleaner cartridge (5)		●		●		●		●		●
Replace brake fluid		●		●		●		●		●
Replace passenger compartment cleaner (5)	O	●	O	●	O	●	O	●	O	●

(1) The actual interval for changing engine oil and replacing the engine oil filter depends on the vehicle usage conditions and is signalled by the warning light or message in the instrument panel. Anyway, it must never exceed 2 years.
(2) If the car is mainly used in towns and cities, change the engine oil and filter every year.
(3) Areas that are not dusty: advised maximum mileage 120,000 km. Regardless of the mileage, the belt must be replaced every 6 years.
Dusty areas and/or demanding use of the car (cold climates, town use, long periods of idling): advised maximum mileage 60,000 km. Regardless of the mileage, the belt must be replaced every 4 years.
(4) If the car runs on fuel with quality below the relevant European specification, this filter must be replaced every 20,000 km
(5) If the car is used in dusty areas, this cleaner must be replaced every 20,000 km.
(O) Recommended operations
(●) Mandatory operations

PERIODIC CHECKS

Every 1,000 km or before long journeys, check and restore the following if necessary:

❒ engine coolant, brake fluid and windscreen washer fluid level;

❒ tyre inflation pressure and condition;

❒ operation of lighting system (headlamps, direction indicators, hazard warning lights, etc.);

❒ operation of window washer/wiper system and positioning/wear of windscreen/rear window wiper blades

Check and top up, if required, the engine oil level every 3,000 km.

HEAVY-DUTY USE OF THE CAR

If you use the car mainly under one of the following conditions:

❒ towing a trailer or caravan;

❒ dusty roads;

❒ short, repeated journeys (less than 7-8 km) at sub-zero outside temperatures;

❒ engine often idling or driving long distances at low speeds or long periods of idleness;

the following checks must be performed more frequently than indicated in the Scheduled Servicing Plan:

❒ check front disc brake pad conditions and wear;

❒ check cleanliness of bonnet and boot locks, cleanliness and lubrication of linkage;

❒ visually inspect conditions of: engine, gearbox, transmission, pipes and hoses (exhaust - fuel system - brakes) and rubber elements (boots - sleeves - bushes - etc.);

❒ check battery charge and battery fluid level (electrolyte);

❒ visually inspect condition of the accessory drive belts;

❒ check and, if necessary, change engine oil and replace oil filter;

❒ check and, if necessary, replace pollen filter;

❒ check and, if necessary, replace air cleaner.

CHECKING LEVELS

When topping up, take care not to mix up the various types of fluids: they are not compatible with each other and could seriously damage the car.

Never smoke while working in the engine compartment: gas and inflammable vapours may be present, with the risk of fire.

Be very careful when working in the engine compartment when the engine is hot: you may get burned. Remember that the fan may start up if the engine is hot: this could injure you. Scarves, ties and other loose clothing might be pulled by moving parts.

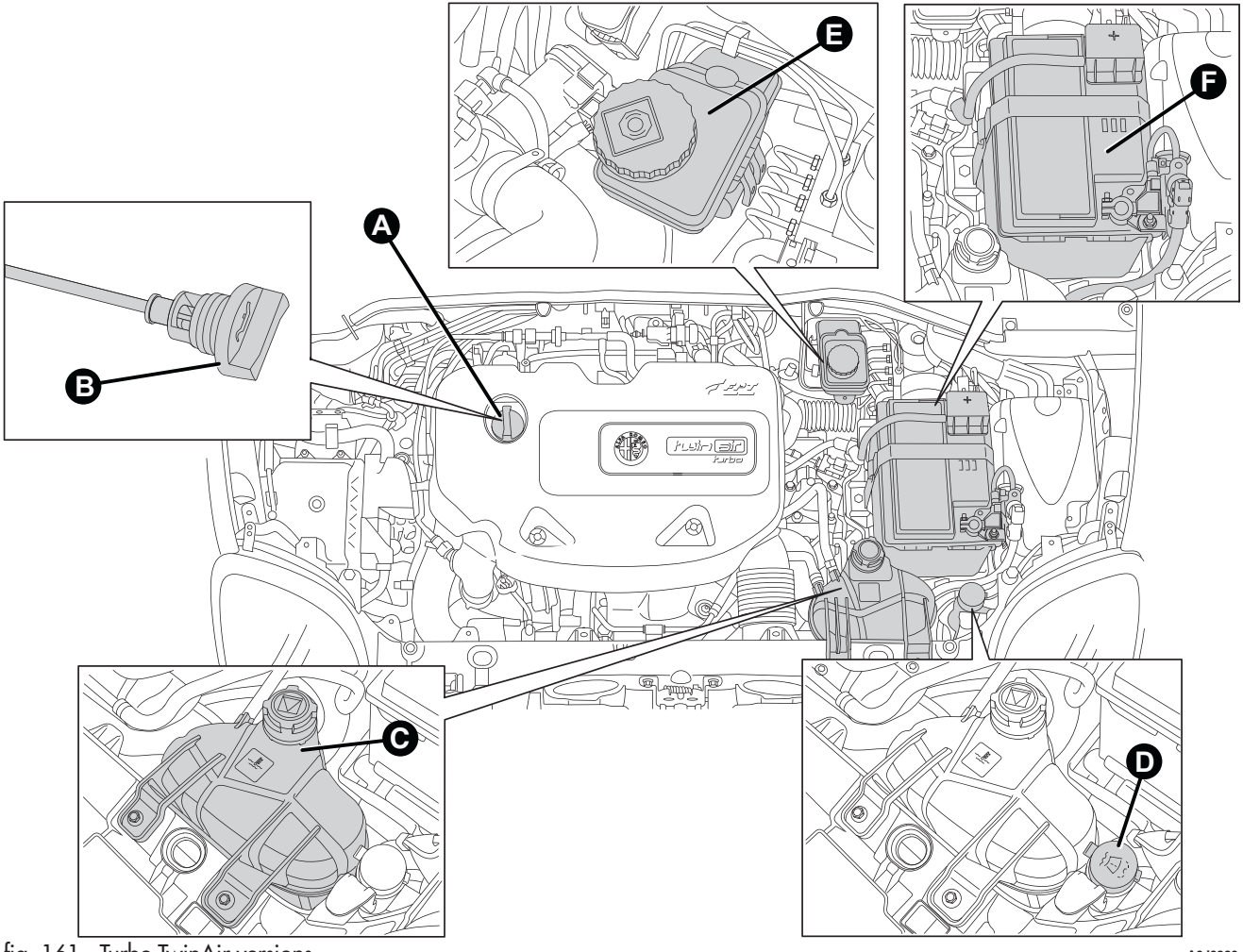

fig. 161 - Turbo TwinAir versions

A0J0380

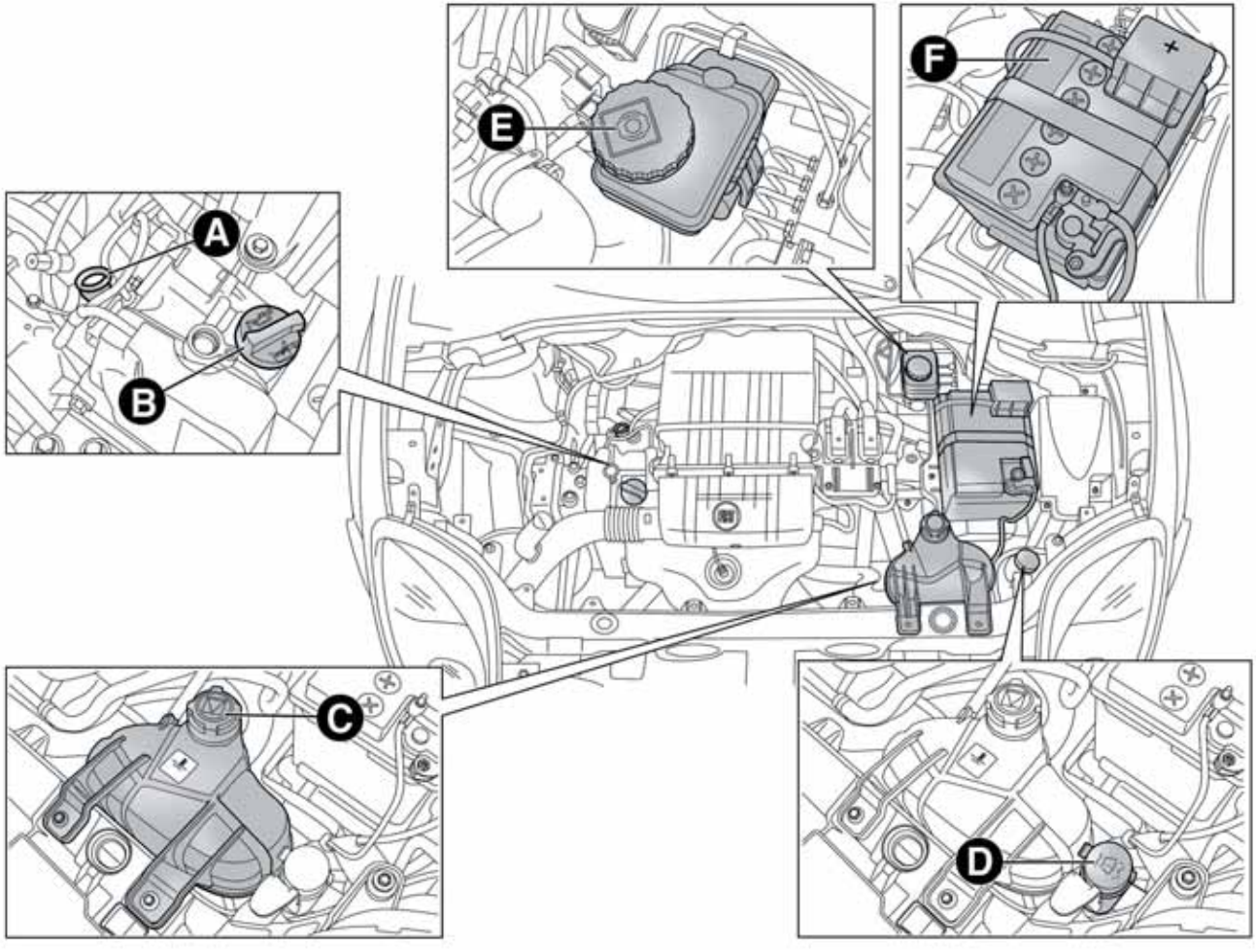

fig. 162 - 1.4 Petrol versions

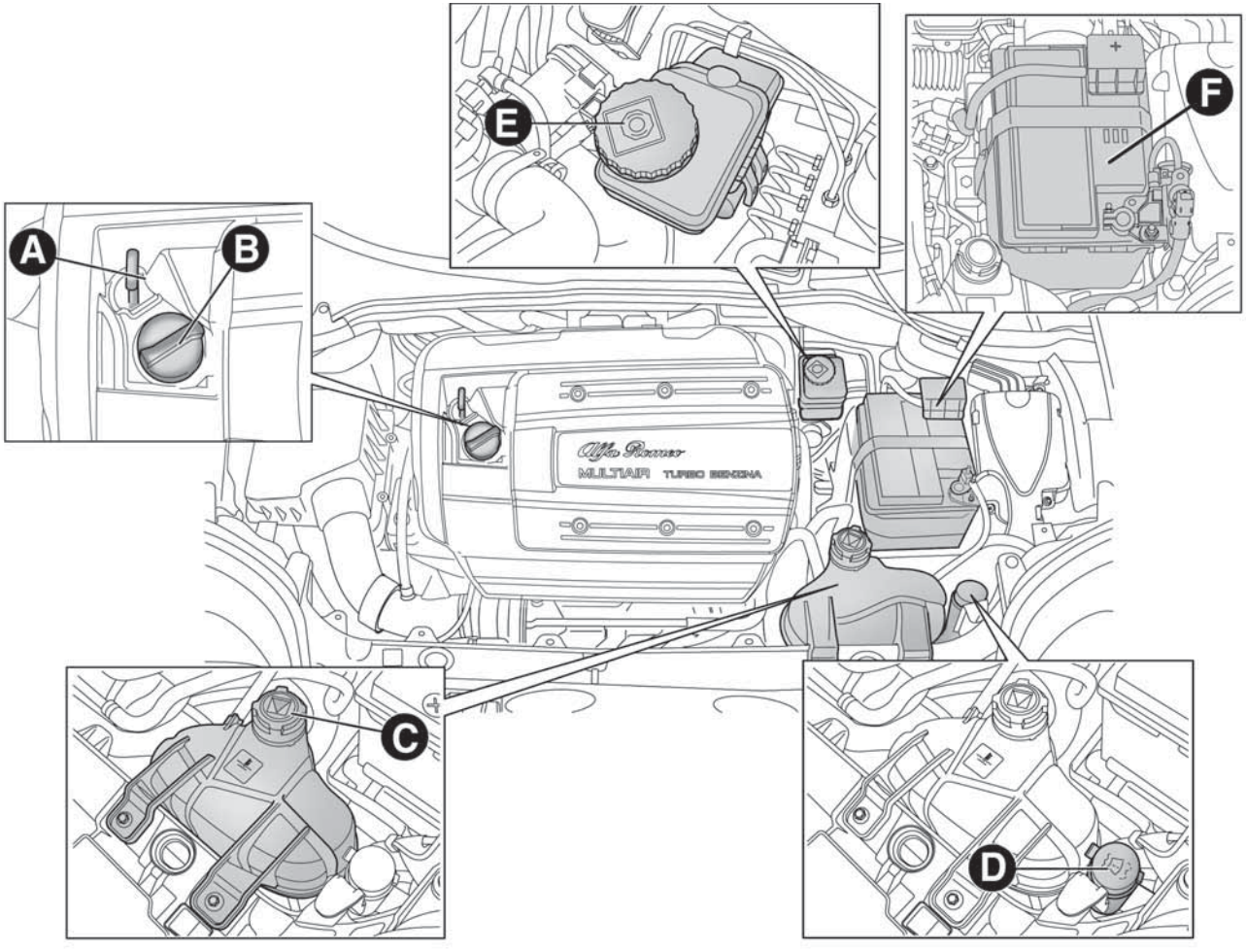

fig. 163 - 1.4 Turbo MultiAir versions

A0J0283

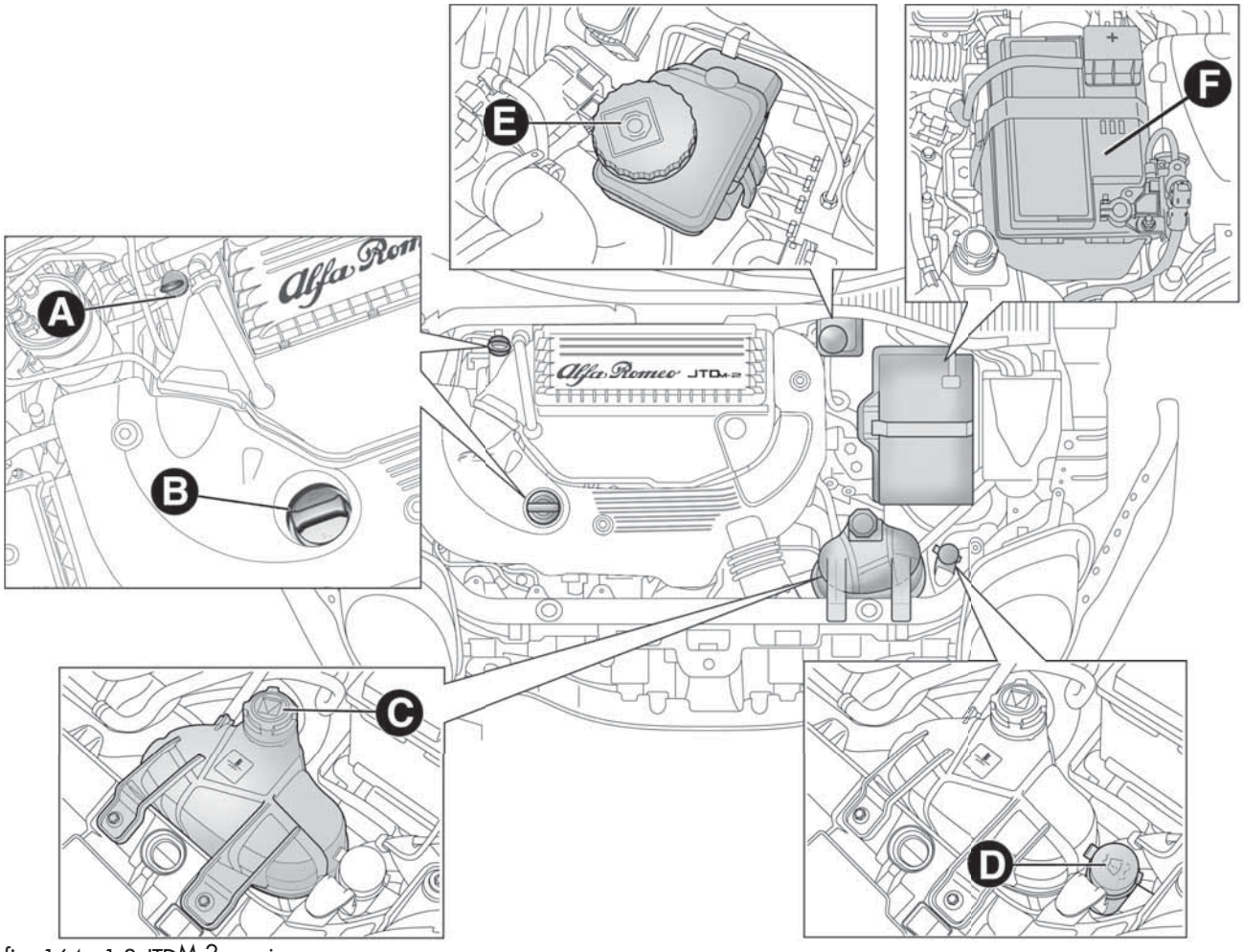

fig. 164 - 1.3 JTDM-2 versions

A0J0411

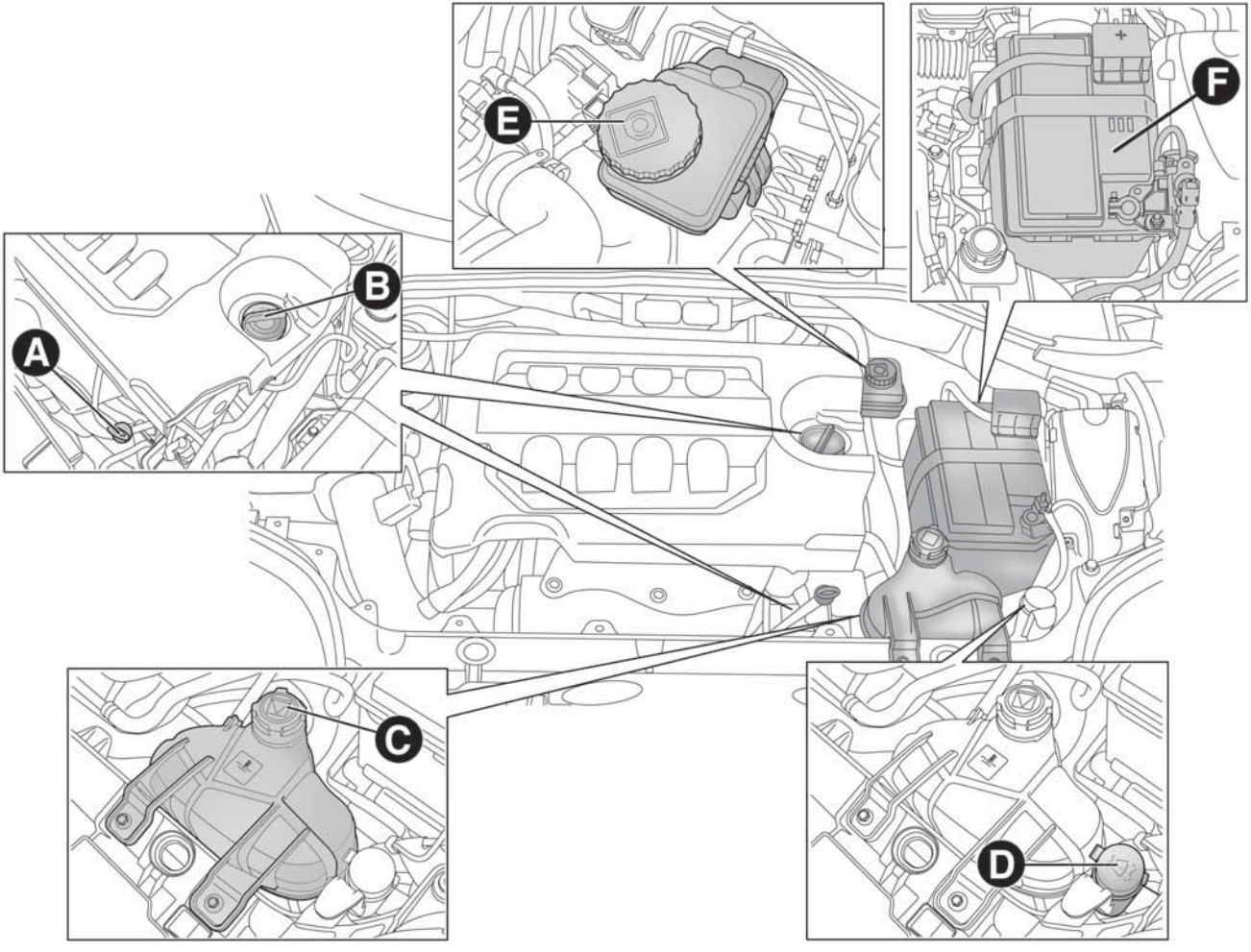

fig. 165 - 1.6 JTDM versions

A0J0200

ENGINE OIL

Check that the oil level is between the MIN and MAX references on the dipstick A.

If the oil level is near or under the MIN reference, add oil through the filler B until it reaches the MAX reference.

The oil level must never exceed the MAX reference.

1.4 Petrol, 1.4 Turbo MultiAir, 1.3 JTD_{M-2}, 1.6 JTD_M versions

Take out the engine oil dipstick A, clean it with a lint-free cloth and reinsert it. Extract it again and check that the level is between the MIN and MAX marks on the dipstick.

Turbo TwinAir versions

The engine oil dipstick A is integral with plug B. Undo the plug, clean the dipstick with a cloth that does not leave traces, reinsert the dipstick and re-tighten the plug.

Unscrew the plug again and check that the engine oil level is between the MIN and MAX marks on the dipstick.

Engine oil consumption

The maximum engine oil consumption is usually 400 grams every 1,000 km. When the car is new, the engine needs to be run in; therefore the engine oil consumption can only be considered stabilised after the first 5,000 - 6,000 km.

Do not add oil with specifications other than those of the oil already in the engine.

Used engine oil and oil filters contain substances which are harmful to the environment. We recommend having the oil and filters replaced by Alfa Romeo Authorised Services.

ENGINE COOLANT

If the level is too low, unscrew reservoir cap C and add the fluid described in the "Technical Specifications" section.

PARAFLU UP anti-freeze is used in the engine cooling system. Use the same fluid as in the cooling system when topping up. PARAFLU UP cannot be mixed with any other type of fluid. If this accidentally occurs, do not start the engine under any circumstances. Contact Alfa Romeo Authorised Services.

The cooling system is pressurised. If necessary, only replace the cap with another genuine one or the operation of the system may be adversely affected. Do not remove the reservoir cap when the engine is hot: you risk scalding yourself.

WINDSCREEN/REAR WINDOW WASHER FLUID

If the level is too low, lift reservoir cap D and add the fluid described in the chapter "Technical Specifications".

Do not travel if the windscreen washer reservoir is empty: using the windscreen washer is essential for improving visibility. Some commercial windscreen washer additives are flammable. The engine compartment contains hot components which may set it on fire.

BRAKE FLUID

Check that the fluid is at the max. level.

If the fluid level in the reservoir is too low, undo reservoir cap E and add the fluid described in the chapter "Technical Specifications".

Prevent brake fluid, which is highly corrosive, from coming into contact with painted parts. Should it happen, wash immediately with water.

Brake fluid is poisonous and highly corrosive. In the event of accidental contact, immediately wash the affected parts with water and mild soap. Then rinse thoroughly. Call a doctor immediately if swallowed.

Symbol on the container identifies synthetic brake fluids, distinguishing them from the mineral type. Using a mineral-type fluid will damage the special rubber seals of the braking system beyond repair.

AIR CLEANER/POLLEN FILTER/DIESEL FILTER

Contact Alfa Romeo Authorized Services to replace the filters.

BATTERY

Battery F (see previous pages) does not require the electrolyte to be topped up with distilled water. A periodic check carried out at Alfa Romeo Authorized Services is, however, necessary to check efficiency.

REPLACING THE BATTERY

If necessary, replace the battery with another genuine battery with the same specifications. Follow the battery manufacturer's instructions for maintenance.

USEFUL ADVICE FOR EXTENDING THE LIFE OF YOUR BATTERY

To avoid draining your battery rapidly and maintain its efficiency over time, carefully observe the following instructions:

❒ when you park the car, ensure that the doors, bonnet and flaps are closed correctly, to prevent any roof lights from remaining on inside the passenger compartment;

❒ switch off all roof lights inside the car: the car is however equipped with a system which switches all internal lights off automatically;

❒ do not keep accessories (e.g. sound system, hazard lights, etc.) switched on for a long time when the engine is not running;

❒ before performing any operation on the electrical system, disconnect the negative battery pole;

IMPORTANT If the charge level remains under 50% for a long time, the battery is damaged by sulphation, reducing its capacity and efficiency at start-up.

The battery will also be more at risk of freezing (this can happen as early as −10°C). Refer to "Storing the car" in "Starting and driving" if the car is left parked for a long time.

If after having purchased your car you decide to add accessories requiring permanent electrical power (alarm etc.) or accessories that require large amounts of power, contact Alfa Romeo Authorized Services. They can calculate the overall electrical requirement.

Battery liquid is poisonous and corrosive. Avoid contact with the skin and the eyes. Keep naked flames and sources of sparks away from the battery: risk of explosion and fire.

Using the battery with insufficient fluid irreparably damages the battery and may cause an explosion.

Incorrect installation of electric and electronic devices may cause severe damage to your car. After purchasing your car, if you wish to install any accessories (anti-theft, radio phone etc.), contact Alfa Romeo Authorized Services, who will suggest the most appropriate devices for your vehicle and will, most importantly, advise you if a higher capacity battery needs to be installed.

Batteries contain substances which are very dangerous for the environment. For the replacement of the battery, contact Alfa Romeo Authorized Services.

If the car will be unused for an extended period of time in extremely cold weather conditions, remove the battery and store it in a heated area to prevent it from freezing.

When performing any operation on the battery or near it, always protect your eyes with special goggles.

WHEELS AND TYRES

Before embarking on a long trip, and every two weeks, check the tyre inflation pressure and space-saver wheel. Check the tyres when cold.

While driving the car, the pressure increases under standard conditions: for the correct tyre inflation pressure, see "Wheels" paragraph in the "Technical specifications" chapter.
Incorrect pressure causes abnormal tyre wear fig. 166:

A normal pressure: tread evenly worn;

B low pressure: tread particularly worn at the edges;

C high pressure: tread particularly worn in the centre.

The tyres must be replaced when the tread is less than 1.6 mm thick.

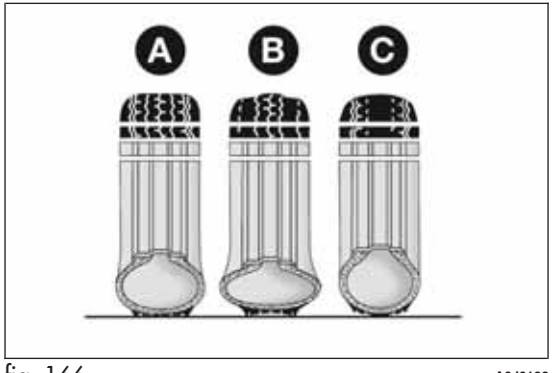

fig. 166 A0J0136

IMPORTANT

Take the following precautions to prevent damage to the tyres:

❒ avoid braking suddenly, racing starts and violent impact against the curb, potholes or other obstacles and driving for extended periods on uneven road surfaces;

❒ periodically check that the tyres have no cuts in the side wall, abnormal swelling or irregular tyre wear;

❒ avoid travelling with the car overloaded. If you puncture a tyre, stop immediately and replace it;

❒ change the position of the tyres every 10-15 thousand kilometres, keeping them on the same side of the car to avoid inverting the direction of rotation;

❒ tyres age even if they are not used much. Cracks in the tread and on the sidewalls are a sign of ageing. Have the tyres checked by specialised personnel if they have been fitted for longer than 6 years. Remember to check the space-saver wheel very carefully;

❒ In the case of replacement, always fit new tyres, avoiding those of dubious origin;

❒ if a tyre is replaced, also replace the inflation valve.

Remember that the road holding qualities of your car also depend on the correct inflation pressure of the tyres.

If the pressure is too low the tyre overheats and can be seriously damaged.

Do not cross switch the tyres, moving them from the right of the car to the left and vice versa.

Never submit alloy rims to repainting treatments requiring the use of temperatures exceeding 150°C. The mechanical properties of the wheels could be impaired.

WINDSCREEN/REAR WINDOW WIPER

BLADES

We recommend replacing the blades once a year.

A few simple precautions can reduce the possibility of damage to the blades:

❒ if the temperature falls below zero, make sure that ice has not frozen the rubber against the glass. Use a de-icing product to release it if required;

❒ remove any snow from the window;

❒ do not operate the windscreen/rear window wipers on dry glass.

Driving with worn windscreen/rear window wiper blades is a serious hazard, because visibility is reduced in bad weather.

Replacing the wiper blades

Proceed as follows:

❒ raise the wiper arm, press tab A fig. 167 of the attachment spring and remove the blade from the arm;

❒ fit the new blade by inserting the tab into the special slot in the arm. Make sure that it is properly locked into place;

❒ lower the windscreen wiper arm on the windscreen.

Do not operate the windscreen wiper with the blades lifted from the windscreen.

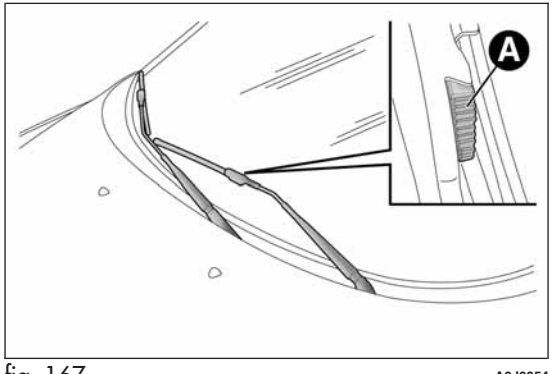

fig. 167 A0J0054

Lifting the wiper blades

When the wiper blades have to be lifted from the windscreen (i.e. in the event of snow), proceed as follows:

❒ turn the ignition key to the MAR position;

❒ operate the lever to the right of the steering wheel to activate a windscreen wiper stroke (see paragraph "Window washing" in chapter "Getting to know your car");

❒ turn the ignition key to the STOP position when the driver's side wiper blade reaches the windscreen side pillar and lift the windscreen wiper to the rest position;

❒ bring the wiper blades back into contact with the windscreen before activating the windscreen wiper.

Replacing the rear window wiper blade

Proceed as follows:

❒ raise cover A fig. 168, undo nut B and remove arm C;

❒ correctly position the new arm, fully tighten nut B then lower cover A.

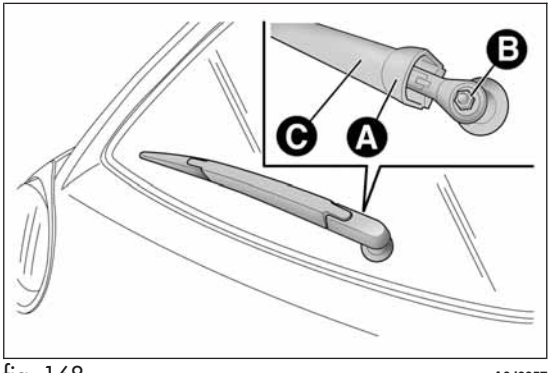

fig. 168 A0J0057

SPRAY NOZZLES

Windscreen washer

The window washer jets are fixed fig. 169.

If the jet of fluid is inadequate, firstly check that there is fluid in the reservoir: see "Checking fluid levels" in this section).

Then check that the nozzle holes are not clogged, if necessary using a needle.

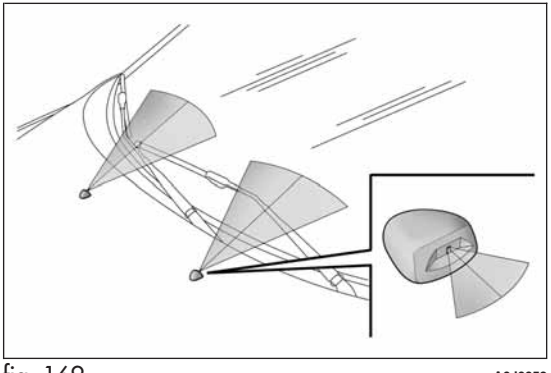

fig. 169 A0J0053

Rear Window Washer

The nozzle holder is on the rear window fig. 170.

The rear window washer jets are fixed.

HEADLIGHT WASHERS

(for versions/markets, where provided)

They are located inside the front bumper fig. 171.

They are activated when the dipped beam and/or main beam headlights are on and the windscreen washer is activated.

Check the correct operation and cleanliness of nozzles at regular intervals.

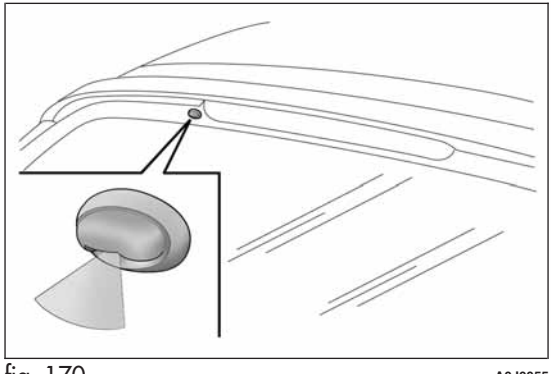

fig. 170 A0J0055

BODYWORK

PROTECTION AGAINST ATMOSPHERIC AGENTS

The car is equipped with the best available technological solutions to effectively protect the bodywork against corrosion.

These include:

- ❒ painting products and systems which give the car resistance to corrosion and abrasion
- ❒ use of galvanised (or pretreated) steel sheets, with high resistance to corrosion;
- ❒ spraying of plastic parts, with a protective function in the more exposed points: underdoor, inner wing, edges, etc;
- ❒ use of "open" boxed sections to prevent condensation and pockets of moisture which could favour the formation of rust inside;
- ❒ use of special films to protect against abrasion in exposed areas (e.g. rear wing, doors, etc.).

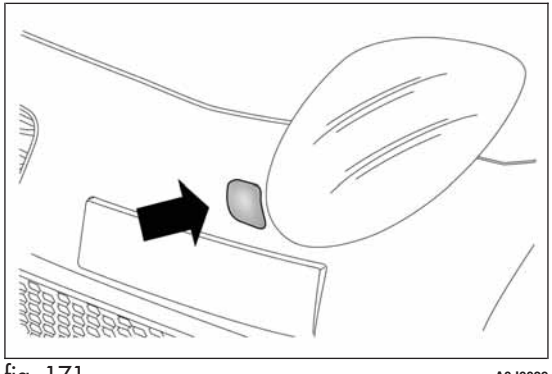

fig. 171 A0J0029

BODY AND UNDERBODY WARRANTY

Your car is covered by warranty against perforation due to rust of any original element of the structure or bodywork. For the general terms of this warranty, refer to the Warranty Booklet.

PRESERVING THE BODYWORK

Paintwork

Touch up abrasions and scratches immediately to prevent the formation of rust.

Maintenance of paintwork consists of washing the car: the frequency depends on the conditions and environment where the car is used. For example, it is advisable to wash the car more often in areas with high levels of atmospheric pollution or salted roads.

On some versions the car may be equipped, on request, with an exclusive opaque paint on the roof which, in order to be maintained intact, requires special care: see the instructions below.

Avoid washing with rollers and/or brushes in washing stations. Wash the car only by hand using neutral pH detergents; dry it with a wet chamois leather. Abrasive products and/or polishes should not be used for cleaning the car. Bird droppings must be washed off immediately and thoroughly as the acid they contain is particularly aggressive. Avoid (if at all possible) parking the car under trees; remove vegetable resins immediately as, when dried, it may only be possible to remove them with abrasive products and/or polishes, which is highly inadvisable as they could alter the typical opacity of the paint. Do not use pure screen washer fluid for cleaning the front windscreen and rear window; dilute it min. 50% with water. Only use pure screen washer fluid when strictly necessary due to outside temperature conditions.

To correctly wash the car, follow these instructions:

- ❒ remove the aerial from the roof when using a carwash;
- ❒ if high pressure jets or cleaners are used to wash the car, keep a distance of at least 40 cm from the bodywork to avoid damage or alteration. Bear in mind that a build up of water could cause damage to the car in the long term;
- ❒ wash the bodywork using a low pressure jet of water;
- ❒ wipe a sponge with a slightly soapy solution over the bodywork, frequently rinsing the sponge;
- ❒ rinse well with water and dry with a jet of air or a chamois leather.

Dry the less visible parts (e.g. door frames, bonnet, headlight frames, etc.) with special care, as water may stagnate more easily in these areas. Do not wash the car after it has been left in the sun or with the bonnet hot: this may alter the shine of the paintwork.

Exterior plastic parts must be cleaned in the same way as the rest of the car.

Detergents pollute the environment. Only wash your car in areas equipped to collect and treat wastewater from this type of activity.

In order to preserve the aesthetic properties of the paintwork, abrasive products and/or polishes should not be used to clean the car.

IMPORTANT

Avoid parking under trees; the resin dropped by trees makes the paintwork go opaque and increases the possibility of corrosion.

Bird droppings must be washed off immediately and thoroughly as the acid they contain is particularly aggressive.

Windows

Use specific detergents and clean cloths to prevent scratching or altering the transparency.

IMPORTANT Wipe the rear window inside gently with a cloth following the direction of the filaments to avoid damaging the heating device.

Front headlights

Use a soft cloth soaked in water and detergent for washing cars.

IMPORTANT Never use aromatic substances (e.g. petrol) or ketenes (e.g. acetone) for cleaning the plastic lenses of the front headlights.

IMPORTANT When cleaning with a pressure washer, keep the water jet at least 20 cm away from the headlights.

Engine compartment

At the end of every winter, wash the engine compartment thoroughly, taking care not to aim the jet of water directly at the electronic control units or at the windscreen wiper motors. Have this operation performed at a specialised workshop.

IMPORTANT The washing should take place with the engine cold and the ignition key in the STOP position. After the washing operation, make sure that the various protections (e.g. rubber caps and guards) have not been removed or damaged.

INTERIORS

Periodically check for water puddles under the mats that could cause the panels to rust.

Never use flammable products, such as petrol ether or rectified petrol to clean the inside of the car. The electrostatic charges which are generated by rubbing during the cleaning operation may cause a fire.

Do not keep aerosol cans in the car: they might explode. Aerosol cans must not be exposed to a temperature exceeding 50°C. When the car is exposed to sunlight, the internal temperature can greatly exceed this value.

SEATS AND FABRIC PARTS

Remove dust with a soft brush or a vacuum cleaner. It is advisable to use a moist brush on velvet upholstery. Rub the seats with a sponge soaked in a solution of neutral detergent and water.

CLEANING ALCANTARA SEATS

Alcantara trim can be treated and cleaned easily in the same way as the other trims. The same indications given for cleaning fabrics are also therefore applicable for this trim.

LEATHER SEATS
(for versions/markets, where provided)

Remove the dry dirt with a buckskin or slightly damp cloth, without exercising too much pressure. Remove liquid or oil stains using a dry absorbent cloth, without rubbing. Then clean with a soft cloth or buckskin cloth dampened with water and neutral soap. If the stain persists, use specific products and observe the instructions carefully.

IMPORTANT Never use alcohol. Make sure that the cleaning products used contain no alcohol or alcohol derivatives, even in small quantities.

PLASTIC AND COATED PARTS

Clean interior plastic parts with a damp cloth (if possible made from microfibre), and a solution of water and neutral, non-abrasive detergent. To clean oily or persistent stains, use specific products free from solvents and designed to maintain the original appearance and colour of the components.

Remove any dust using a microfibre cloth, if necessary moistened with water. The use of paper tissues is not recommended as these may leave residues.

Never use alcohol, petrols and derivatives to clean the dashboard and instrument panel lens.

LEATHER PARTS
(for versions/markets, where provided)

Use only water and neutral soap to clean these parts. Never use alcohol or alcohol-based products. Before using a specific product for cleaning interiors, make sure that it does not contain alcohol and/or alcohol based substances.

GETTING TO KNOW YOUR CAR
SAFETY
STARTING AND DRIVING
IN AN EMERGENCY
SERVICING AND MAINTENANCE
TECHNICAL SPECIFICATIONS
INDEX

IDENTIFICATION DATA

The identification details of the car are:

❒ V.I.N. plate;
❒ Chassis marking;
❒ Body paintwork identification plate;
❒ Engine marking.

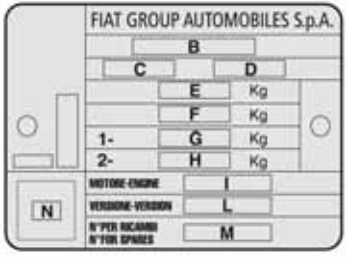

fig. 172 A0J0161

V.I.N. PLATE

This is located on the left side of the rear luggage compartment floor and bears the following data fig. 172:

B Type-approval number.
C Vehicle type identification code
D Chassis serial number.
E Maximum authorised weight of vehicle fully laden
F Maximum authorised weight of vehicle fully laden plus trailer.
G Maximum permitted weight on first (front) axle
H Maximum permitted weight on second (rear) axle
I Engine type.
L Bodywork version code.
M Spares number.
N Correct value of smoke coefficient (for diesel engines)

CHASSIS MARKING

This is printed on the passenger compartment floor, near the front right seat.

Slide flap A fig. 173 to access.

The marking includes:

❒ vehicle type (ZAR 955000);

❒ chassis serial number.

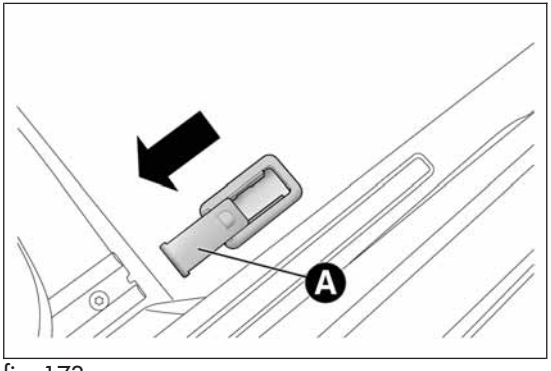

fig. 173 A0J0140

BODYWORK PAINT IDENTIFICATION PLATE

This is fitted to the inside of the tailgate and bears the following data fig. 174:

A Paint manufacturer.

B Colour name.

C Fiat colour code.

D Respray and touch up code.

ENGINE MARKING

This is stamped on the cylinder block and gives the model and the chassis serial number.

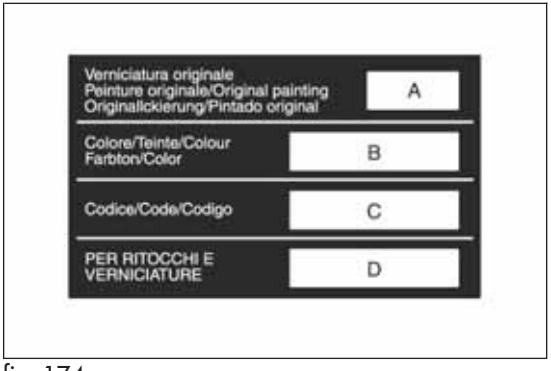

fig. 174 A0J0138

ENGINE CODES - BODYWORK VERSIONS

Versions	Engine code	Body versions
Turbo TwinAir 105 HP	199B6000	955AXY1B 18 (*)
		955AXY1B 18B (**)
1.4 Petrol 8V 70 HP	955A9000	955AXV1A 16C (*)
		955AXV1A 16D (**)
1.4 Petrol 8V 78 HP	350A1000	955AXU1A 15C (*)
		955AXU1A 15D (**)
1.4 Turbo MultiAir 135 HP (***)	955A2000	955AXM1A 09C (*)
		955AXM1A 09D (**)
1.4 Turbo MultiAir 163 HP Quadrifoglio Verde (***)	955A8000	955AXS1B 13 (*)
		955AXS1B 13B (**)
1.4 Turbo MultiAir 170 HP Quadrifoglio Verde (***)	940A2000	955AXN1B 10 (*)
		955AXN1B 10B (**)
1.3 JTD$_{M-2}$ 85 HP	199B4000	955AXT1A 14C (*)
		955AXT1A 14D (**)
1.3 JTD $_{M-2}$ 85 HP (***)	199B4000	955AXT1A 14E (*)
		955AXT1A 14F (**)

(*) 4-seater versions
(**) 5-seater versions
(***) For versions/markets, where provided

Versions	Engine code	Body versions
1.6 JTD$_M$ 115 HP (***)	955A4000	955AXE1B 04N (*)
		955AXHE1B 04P (**)
1.6 JTD$_M$ 120 HP	955A3000	955AXC1B 02L (*)
		955AXC1B 02M (**)

(***) For versions/markets, where provided
(*) 4-seater versions
(**) 5-seater versions

ENGINE

GENERAL INFORMATION	Turbo TwinAir 105 HP	
Type code	199B6000	
Cycle	Otto	
Number and arrangement of cylinders	2 in line	
Piston diameter and travel (mm)	80.5x86	
Total displacement (cm^3)	875	
Compression ratio	10	
	NATURAL	DYNAMIC
Maximum power (EC) (kW)	72	77
Maximum power (EC) (HP)	98	105
corresponding engine speed (rpm)	5750	5500
	NATURAL	DYNAMIC
Maximum torque (EC) (Nm)	120	145
Maximum torque (EC) (kgm)	12,2	14,8
corresponding engine speed (rpm)	1750	2000
Spark plugs	NGK ILKR9G8	
Fuel	Unleaded petrol 95 RON or 98 RON (EN 228 specification)	

GENERAL INFORMATION	1.4 petrol 8V 70 HP	1.4 Petrol 8V 78 HP
Type code	955A9000	350A1000
Cycle	Otto	Otto
Number and arrangement of cylinders	4 in line	4 in line
Piston bore and stroke (mm)	72.0 x 80.4	72.0 x 80.4
Total displacement (cm^3)	1368	1368
Compression ratio	11.1	11.1
Maximum power (EEC) (kW)	51	57
Maximum power (EEC) (HP)	70	78
corresponding engine speed (rpm)	6000	6000
Max torque (EEC) (Nm)	115	115
Maximum torque (EEC) (kgm)	11.7	11.7
corresponding engine speed (rpm)	3000	3000
Spark plugs	NGK ZKR7A-10 or Champion RA8MCX4	NGK ZKR7AI-8
Fuel	Unleaded petrol 95 RON (Specification EN 228)	Unleaded petrol 95 RON or 98 RON (EN 228 specification)

GENERAL INFORMATION	1.4 Turbo MultiAir 135 HP (*)	
Type code	955A2000	
Cycle	Otto	
Number and arrangement of cylinders	4 in line	
Piston bore and stroke (mm)	72.0 x 80.4	
Total displacement (cm^3)	1368	
Compression ratio	9.8	
Maximum power (EC) (kW)	99	
Maximum power (EC) (HP)	135	
corresponding engine speed (rpm)	5500	
	NATURAL	DYNAMIC
Maximum torque (EC) (Nm)	190	206
Maximum torque (EC) (kgm)	19,3	21
corresponding engine speed (rpm)	4250	1750
Spark plugs	NGK IKR9F8	
Fuel	Unleaded petrol 95 RON or 98 RON (EN 228 specification)	

(*) For versions/markets, where provided

GENERAL INFORMATION	1.4 Turbo MultiAir 170 HP Quadrifoglio Verde	
Type code	955A8000 (*)	
	940A2000	
Cycle	Otto	
Number and arrangement of cylinders	4 in line	
Piston bore and stroke (mm)	72.0 x 80.4	
Total displacement (cm^3)	1368	
Compression ratio	9.8	
Maximum power (EC) (kW)	120 (*) / 125	
Maximum power (EC) (HP)	163 (*) / 170	
corresponding engine speed (rpm)	5500 (*) / 5000	
	NATURAL	DYNAMIC
Maximum torque (EC) (Nm)	230	250
Maximum torque (EC) (kgm)	23.4	25.5
corresponding engine speed (rpm)	2500	2500
Spark plugs	NGK IKR9F8	
Fuel	Unleaded petrol 95 RON or 98 RON (EN 228 specification)	

(*) For versions/markets, where provided

GENERAL INFORMATION	1.3 JTD_{M-2} 85 HP
Type code	199B4000
Cycle	Diesel
Number and arrangement of cylinders	4 in line
Piston diameter and travel (mm)	69.6 x 82
Total displacement (cm^3)	1248
Compression ratio	16,8
Maximum power (EC) (kW)	62
Maximum power (EC) (HP)	85
corresponding engine speed (rpm)	3500
Maximum torque (EC) (Nm)	200
Maximum torque (EC) (kgm)	20,4
corresponding engine speed (rpm)	1500
Fuel	Diesel for automotive engines (EN 590 Specification)

GENERAL INFORMATION	1.6 JTD$_M$ 115 HP (*)		1.6 JTD$_M$ 120 HP	
Type code	955A4000		955A3000	
Cycle	Diesel		Diesel	
Number and arrangement of cylinders	4 in line		4 in line	
Piston bore and stroke (mm)	79.5 x 80.5		79.5 x 80.5	
Total displacement (cm^3)	1598		1598	
Compression ratio	16,5		16,5	
Maximum power (EEC) (kW)	85		88	
Maximum power (EEC) (HP)	115		120	
corresponding engine speed (rpm)	4000		3750	
	NATURAL	DYNAMIC	NATURAL	DYNAMIC
Max torque (EEC) (Nm)	260	300	280	320
Maximum torque (EC) (kgm)	26.5	30.6	28.6	32.6
corresponding engine speed (rpm)	1500	1500	1500	1750
Spark plugs	–		–	
Fuel	Diesel for motor vehicles (EN 590 specification)		Diesel for motor vehicles (EN 590 specification)	

(*) For versions/markets, where provided

FUEL SUPPLY

Versions	Fuel supply
Turbo TwinAir – 1.4 petrol	Timed, sequential Multipoint electronic injection with knock control
1.4 Turbo MultiAir	Phased sequential electronic injection with knock control and variable intake valve actuation
1.3 JTD_{M-2} – 1.6 JTD_M	Electronically controlled Common Rail MultiJet direct injection with turbo and intercooler

Modifications or repairs to the fuel supply system that are not carried out correctly or do not take the system's technical specifications into account can cause malfunctions leading to the risk of fire.

TRANSMISSION

Versions	Gearbox	Clutch	Drive
1.4 Petrol	Five forward gears and reverse with synchronizers for forward gear engagement	Self-adjusting pedal without idle stroke	Front
1.4 Turbo MultiAir 135 HP			
1.3 JTD_{M-2}			
Turbo TwinAir	Six forward gears plus reverse with synchronisers for forward gear engagement	Self-adjusting pedal without idle stroke	Front
1.4 Turbo MultiAir 170 HP Quadrifoglio Verde			
1.6 JTD_M			

BRAKES

Versions	Front brakes	Rear brakes	Parking brake
Turbo TwinAir	Self-ventilated discs	Disc	Controlled by hand lever, acting on the rear brakes
1.4 petrol			
1.4 Turbo MultiAir			
1.3 JTD$_{M-2}$			
1.6 JTD$_{M}$			

IMPORTANT Water, ice and salt spread on the roads may deposit on the brake disks reducing braking efficiency the first time the brakes are applied.

SUSPENSION

Versions	Front	Rear
Turbo TwinAir	McPherson independent wheels with anti-roll bar	Interconnected wheels with torsion beam
1.4 petrol		
1.4 Turbo MultiAir		
1.3 JTD$_{M-2}$		
1.6 JTD$_{M}$		

STEERING SYSTEM

Versions	Turning circle (kerb to kerb)	Type
Turbo TwinAir	11.25 m	Rack and pinion with electric power steering
1.4 petrol		
1.4 Turbo MultiAir		
1.3 JTD_{M-2}		
1.6 JTD_{M}		

WHEELS

RIMS AND TYRES

Pressed steel or alloy rims. Tubeless radial carcass tyres. The vehicle registration document also lists all type-approved tyres.

IMPORTANT If there are any discrepancies between the Owner Handbook and the registration document, take the information from the latter. For safe driving, the car must be fitted with tyres of the same make and type on all wheels.

IMPORTANT Do not use tubes with tubeless tires.

SPACE-SAVER WHEEL

Pressed steel rim. Tubeless tyre.

CORRECT TYRE READING

Example fig. 175: 195/55 R 16 87H

195 Rated width (S, distance in mm between sidewalls)
55 Height/width ratio (H/S) as a percentage
R Radial tyre
16 Rim diameter in inches (Ø)
91 Load rating (capacity)
V Maximum speed index

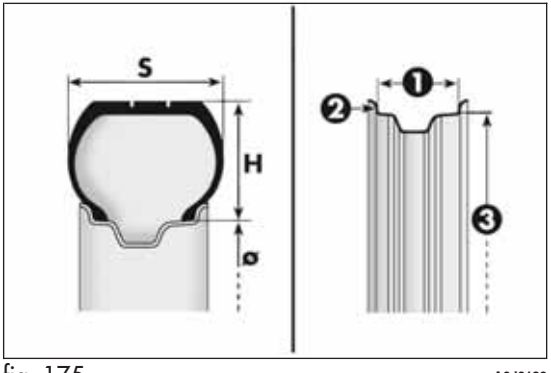

fig. 175 A0J0139

Maximum speed index

Q up to 160 km/h
R up to 170 km/h
S up to 180 km/h
T up to 190 km/h
U up to 200 km/h
H up to 210 km/h
V up to 240 km/h
W up to 270 km/h
Y up to 300 km/h

Maximum speed index for snow tyres

QM + S up to 160 km/h
TM + S up to 190 km/h
HM + S up to 210 km/h

Load rating (capacity)

60 = 250 kg	**76** = 400 kg
61 = 257 kg	**77** = 412 kg
62 = 265 kg	**78** = 425 kg
63 = 272 kg	**79** = 437 kg
64 = 280 kg	**80** = 450 kg
65 = 290 kg	**81** = 462 kg
66 = 300 kg	**82** = 475 kg
67 = 307 kg	**83** = 487 kg
68 = 315 kg	**84** = 500 kg
69 = 325 kg	**85** = 515 kg
70 = 335 kg	**86** = 530 kg
71 = 345 kg	**87** = 545 kg
72 = 355 kg	**88** = 560 kg
73 = 365 kg	**89** = 580 kg
74 = 375 kg	**90** = 600 kg
75 = 387 kg	**91** = 615 kg

CORRECT READING OF THE RIM CODE

Example fig. 175: 6 J x 15 H2 ET 40

6 rim diameter in inches (1).

J profile of the flange (side projection where the tyre bead rests) (2).

15 rim fitting diameter in inches (corresponds to diameter of the tyre to be mounted) (3 = Ø).

H2 shape and number of humps (circumference measurement which keeps the bead of Tubeless tyres in position on the rim).

ET 40 wheel camber (distance between the disc/rim support plane and the wheel rim centre line).

RIM PROTECTOR TYRES

DO NOT fit wheel caps when using integral wheel caps fixed (with springs) to the steel rim and after sale tyres provided with Rim Protector (fig. 176). Use of unsuitable tyres and wheel caps may cause sudden loss of tyre pressure.

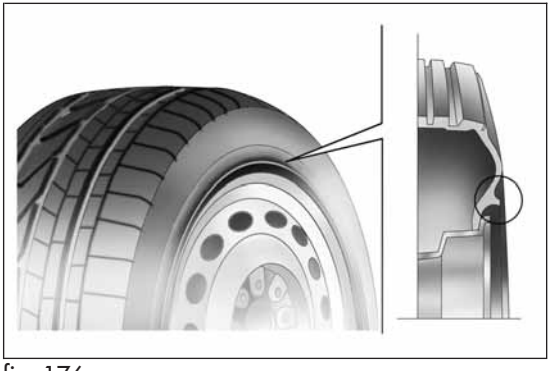

fig. 176 A0J0166

RIMS AND TYRES PROVIDED AS STANDARD

Versions	Rims	Tyres provided	Snow tyres	Space-saver wheel Rim - Tyre	
Turbo TwinAir	6Jx15 ET 40	185/65 R15 88H	185/65 R15 88H (M+S)	135/70 R16	4B x 16 ET 15
	7Jx16 ET 39	195/55 R16 87H	195/55 R16 87H (M+S)		
	7Jx17 ET 39	215/45 R17 87W (*)	215/45 R17 87H (M+S)		
	7 1/2 Jx18 ET 42	215/40 R18 89W XL (*)	215/40 R18 89H (M+S)		
1.4 Petrol	6Jx15 ET 40	185/65 R15 88V (**)	185/65 R15 88Q (M+S)	135/70 R16	4B x 16 ET 15
	6Jx15 ET 40	185/65 R15 88H (***)	185/65 R15 88H (M+S)		
	7Jx16 ET 39	195/55 R16 87H	195/55 R16 87H (M+S)		
	7Jx17 ET 39	205/45 R17 88W XL (**)	205/45 R17 88H (M+S)		
	7Jx17 ET 39	215/45 R17 87W (*)	215/45 R17 87H (M+S)		
	7 1/2 Jx18 ET 42	215/40 R18 89W XL (*)	215/40 R18 89H (M+S)		

(*) Tyres which cannot be fitted with chains
(**) For versions/markets, where provided
(***) 1.4 Petrol versions
(*)Tyres which cannot be fitted with chains

Versions	Rims	Tyres provided	Snow tyres	Space-saver wheel Rim - Tyre	
1.4 Turbo MultiAir 135 HP 1.4 Turbo MultiAir 170 HP Quadrifoglio Verde	6Jx15 ET 40	185/65 R15 88V (**)	185/65 R15 88Q (M+S)	135/70 R16	4B x 16 ET 15
	7Jx16 ET 39	195/55 R16 87V	195/55 R16 87H (M+S)		
	7Jx17 ET 39	205/45 R17 88W XL (**)	205/45 R17 88H (M+S)		
	7Jx17 ET 39	215/45 R17 87W (*)	215/45 R17 87H (M+S)		
	7 1/2 Jx18 ET 42	215/40 R18 89W XL (*)	215/40 R18 89H (M+S)		
1.3 JTD_{M-2} 1.6 JTD_M	6Jx15 ET40	185/65 R15 88H (****)	185/65 R15 88H (M+S)	135/70 R16	4B x 16 ET 15
	6Jx15 ET 40	185/65 R15 88T (**)	185/65 R15 88T (M+S)		
	7Jx16 ET 39	195/55 R16 87H	195/55 R16 87H (M+S)		
	7Jx16 ET 39	195/55 R16 87H Continental Premium Contact 2 (**) (*****)	195/55 R16 87H (M+S)		
	7Jx17 ET 39	205/45 R17 88W XL (**)	205/45 R17 88H (M+S)		
	7Jx17 ET 39	215/45 R17 87W (*)	215/45 R17 87H (M+S)		
	7 1/2 Jx18 ET 42	215/40 R18 89W XL (*)	215/40 R18 89H (M+S)		

(**) For versions/markets, where provided
(**)For versions/markets, where provided
(*)Tyres which cannot be fitted with chains
(*) Tyres which cannot be fitted with chains
(****) 1.6 JTD_M versions
(*****) Otherwise use tyres offering equivalent performance

On versions with 185/65 R15 88H, 195/55 R16 and 205/45 R17 tyres, reduced size snow chains can be used, with a maximum projection of 9 mm beyond the tyre profile.

COLD TYRE INFLATION PRESSURE (bar)

VERSIONS	MEASUREMENT	TYRES PROVIDED			
		MEDIUM LOAD		FULL LOAD	
		Front	Rear	Front	Rear
Turbo TwinAir	185/65 R15 88H	2,3	2,1	2,3	2,3
	195/55 R16 87H	2,3	2,1	2,3	2,3
	215/45 R17 87W	2,2	2,1	2,3	2,3
	215/40 R18 89W XL	2,3	2,1	2,3	2,3
1.4 Petrol	185/65 R15 88T (*)	2,3	2,1	2,3	2,3
	195/55 R16 87H	2,3	2,1	2,3	2,3
	205/45 R17 88W XL (*)	2,3	2,1	2,3	2,3
	215/45 R17 87W	2,2	2,1	2,3	2,3
	215/40 R18 89W XL	2,3	2,1	2,3	2,3
1.4 Turbo MultiAir 135 HP 1.4 Turbo MultiAir 170 HP Quadrifoglio Verde	185/65 R15 88V (*)	2,3	2,1	2,5	2,3
	195/55 R16 87V	2,3	2,1	2,5	2,3
	205/45 R17 88W XL (*)	2,4	2,2	2,8	2,5
	215/45 R17 87W	2,3	2,1	2,6	2,3
	215/40 R18 89W XL	2,4	2,2	2,7	2,4

(*)For versions/markets, where provided

VERSIONS	MEASUREMENT	TYRES PROVIDED			
		MEDIUM LOAD		FULL LOAD	
		Front	Rear	Front	Rear
1.3 JTD$_{M-2}$	185/65 R15 88T (*)	2,6	2,4	2,6	2,4
	195/55 R16 87H	2,3	2,1	2,5	2,3
	205/45 R17 88W XL (*)	2,4	2,2	2,8	2,5
	215/45 R17 87W	2,3	2,1	2,6	2,3
	215/40 R18 89W XL	2,4	2,2	2,7	2,4
1.6 JTD$_{M}$	185/65 R15 88H	2,3	2,1	2,5	2,3
	195/55 R16 87H	2,3	2,1	2,6	2,3
	205/45 R17 88W XL (*)	2,6	2,2	2,8	2,3
	215/45 R17 87W	2,4	2,2	2,6	2,3
	215/40 R18 89W XL	2,5	2,2	2,7	2,3
Space-saver wheel	135/70 R16	4,2			

(*)For versions/markets, where provided

Add +0.3 bar to the prescribed pressure when the tyres are warm. Check correct pressure on a cold tyre.

With snow tyres, add +0.2 bar to the inflation pressure value prescribed for standard tyres.

When travelling at speeds over 160 km/h, inflate the tyres to the values specified for fully laden conditions.

DIMENSIONS

Dimensions are expressed in mm and refer to the vehicle equipped with its original tyres. Height is measured with car unladen.
LUGGAGE COMPARTMENT VOLUME Unladen capacity (V.D.A. standards): = 270 dm^3

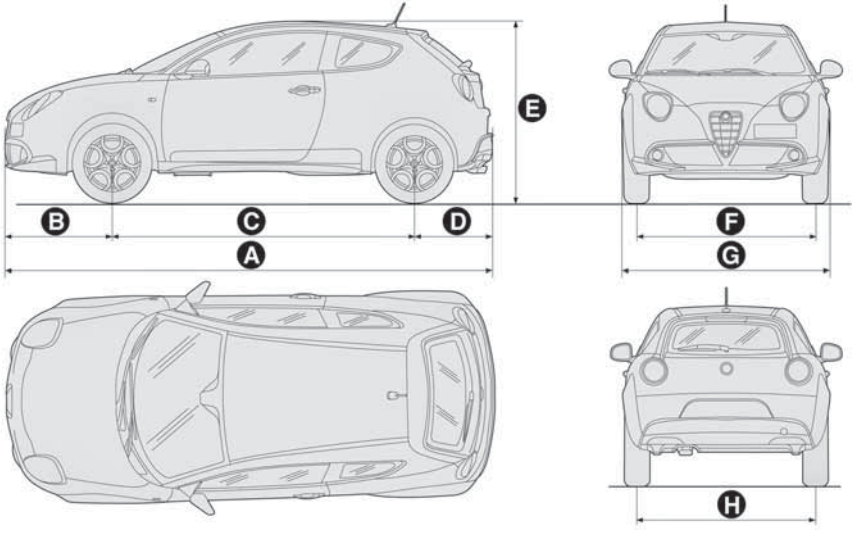

fig. 177

A0J0202

A	B	C	D	E	F	G	H
4063	904	2511	648	1446	1475 (*)/1483 (**)	1720	1469 (*)/1475 (**)

(*)With 195/55 R16 tyres
(**)With 215/40 R18 tyres

Small variations in size are possible depending on the dimensions of the rims

PERFORMANCE

Versions	Top speed (km/h)	Acceleration from 0-100 km/h (secs)
Turbo TwinAir 105 HP	184	11,4
1.4 petrol 8V 70 HP	160	14,0
1.4 petrol 8V 78 HP	165	13.0
1.4 Turbo MultiAir 135 HP	207	8,4
1.4 Turbo MultiAir 170 HP Quadrifoglio Verde	219	7,5
1.3 JTD_{M-2} 85 HP	174	12,9
1.6 JTD_{M}	198	9,9

WEIGHTS

Weights (kg)	Turbo TwinAir		1.4 petrol	
	4-seater	5-seater	4-seater	5-seater
Unladen weight (with all fluids, fuel tank 90% full and without optional equipment):	1130	1130	1080	1080
Payload including the driver: (***)	480	560	480	560
Maximum permitted loads (****)				
– front axle:	950	950	850	850
– rear axle:	850	850	850	850
– total:	1610	1690	1560	1640
Towable loads				
– trailer with brakes:	500	500	500	500
– trailer without brakes:	400	400	400	400
Maximum load on roof:	40	40	40	40
Maximum load on ball (trailer with brakes):	60	60	60	60

(***) If special equipment is fitted (sunroof, tow hitch, etc.) the unladen car weight increases, thus reducing the effective payload with respect to the maximum permitted load.

(****) Loads not to be exceeded. The user is responsible for arranging goods in the luggage compartment and/or load platform within the maximum permitted loads.

Weights (kg)	1.4 Turbo MultiAir	
	4-seater	5-seater
Unladen weight (with all fluids, fuel tank 90% full and without optional equipment):	1135 / 1145 (*)	1135 / 1145 (*)
Payload including the driver: (**)	480	560
Maximum permitted loads (***)		
– front axle:	950	950
– rear axle:	850	850
– total:	1625	1705
Towable loads		
– trailer with brakes:	500	500
– trailer without brakes:	400	400
Maximum load on roof:	40	40
Maximum load on ball (trailer with brakes):	60	60

(*) 1.4 Turbo MultiAir 170 HP version

(**) If special equipment is fitted (sunroof, tow hitch, etc.) the unladen car weight increases, thus reducing the effective payload with respect to the maximum permitted load.

(***) Loads not to be exceeded. The user is responsible for arranging goods in the luggage compartment and/or load platform within the maximum permitted loads.

Weights (kg)	1.3 JTD_{M-2}		1.6 JTD_M	
	4-seater	5-seater	4-seater	5-seater
Unladen weight (with all fluids, fuel tank 90% full and without optional equipment):	1150	1150	1205	1205
Payload including the driver: (*)	480	560	480	560
Maximum permitted loads (**)				
– front axle:	950	950	1000	1000
– rear axle:	850	850	850	850
– total:	1630	1710	1685	1765
Towable loads				
– trailer with brakes:	1000	1000	1000	1000
– trailer without brakes:	400	400	400	400
Maximum load on roof:	40	40	40	40
Maximum load on ball (trailer with brakes):	60	60	60	60

(*) If special equipment is fitted (sunroof, tow hitch, etc.) the unladen car weight increases, thus reducing the effective payload with respect to the maximum permitted load.

(**) Loads not to be exceeded. The user is responsible for arranging goods in the luggage compartment and/or load platform within the maximum permitted loads.

REFUELLING

	Turbo TwinAir		1.4 Petrol		Prescribed fuels and original lubricants
	litres	kg	litres	kg	
Fuel tank	45	–	45	–	Unleaded petrol not less than 95 RON (EN 228 specification)
including a reserve of	5 - 7	–	5 - 7	–	
Engine cooling system (with climate control)	5,4	5,3	5,2	4,6	Mixture of 50% demineralised water and 50% PARAFLU^{UP} fluid (*)
Engine sump	2,8	2,5	2,7	2,3	SELENIA DIGITEK P.E. (Turbo TwinAir versions) SELENIA StAR P.E. (1.4 Petrol versions)
Engine sump and filter	3,3	2,8	2,9	2,5	
Differential/gearbox casing	1,65	1,5	1,6	1,4	TUTELA TRANSMISSION GEARFORCE
Hydraulic brake circuit with ABS anti-lock device	0,53	0,5	0,53	0,5	TUTELA TOP 4
Windscreen/rear window/ headlight washer fluid reservoir (**)	2,2 (4,5)	1,9 (4,0)	2,8 (4,6)	2,5 (4,1)	Mixture of water and TUTELA PROFESSIONAL SC 35

(*) For particularly harsh climate conditions, a mixture of 60% ^{UP} and 40% demineralised water is recommended.
(**) Values in brackets refer to versions with headlight washers

	1.4 Turbo MultiAir		1.3 JTD_{M-2}		Prescribed fuels and original lubricants
	litres	kg	litres	kg	
Fuel tank	45	–	45	–	Unleaded petrol not less than 95 RON (EN 228 specification) (1.4 Turbo MultiAir versions) Diesel for motor vehicles (EN590 specification) (1.3 JTD_{M-2} versions)
including a reserve of	5 - 7	–	5 - 7	–	
Engine cooling system (with climate control)	6,0	5,3	7,2	6,4	Mixture of 50% demineralised water and 50% PARAFLU^{UP} fluid (*)
Engine sump	3,1	2,6	3,0	2,5	SELENIA DIGITEK P.E. (1.4 Turbo MultiAir versions) SELENIA WR FORWARD (1.3JTDversions)
Engine sump and filter	3,5	3,0	3,2	2,7	
Differential/gearbox casing	2.0	1.7	1.8	1.5	TUTELA TRANSMISSION GEARFORCE
Hydraulic brake circuit with ABS anti-lock device	0,53	0,5	0,53	0,5	TUTELA TOP 4
Windscreen/rear window/ headlight washer fluid reservoir (**)	2,2 (4,5)	1,9 (4,0)	3,0 (6,0)	2,8 (5,6)	Mixture of water and TUTELA PROFESSIONAL SC 35

(*) For particularly harsh climate conditions, a mixture of 60% ^{UP} and 40% demineralised water is recommended.
(**) Values in brackets refer to versions with headlight washers

	1.6 JTD$_M$		Prescribed fuels and original lubricants
	litres	kg	
Fuel tank	45	–	Diesel for automotive engines (EN 590 Specification)
including a reserve of	5 - 7	–	
Engine cooling system (with climate control)	5,7	5,0	Mixture of 50% demineralised water and 50% PARAFLU^{UP} fluid (*)
Engine sump	4,3	3,6	SELENIA WR FORWARD
Engine sump and filter	4,6	3,9	
Differential/gearbox casing	2.0	1.7	TUTELA TRANSMISSION GEARFORCE
Hydraulic brake circuit with ABS anti-lock device	0,53	0,5	TUTELA TOP 4
Windscreen/rear window/headlight washer fluid reservoir (**)	3,0 (6,0)	2,8 (5,6)	Mixture of water and TUTELA PROFESSIONAL SC 35

(*) For particularly harsh climate conditions, a mixture of 60% ^{UP} and 40% demineralised water is recommended.
(**) Values in brackets refer to versions with headlight washers

FLUIDS AND LUBRICANTS

Your car is equipped with an engine oil that has been thoroughly developed and tested in order to meet the requirements of the Scheduled Servicing Plan. Constant use of the prescribed lubricants guarantees the fuel consumption and emission specifications. Lubricant quality is crucial for engine operation and duration.

PRODUCT SPECIFICATIONS

Use	Fluid and lubricant features for a correct use of the car	Genuine fluids and lubricants	Replacement interval
Lubricant for petrol engines (Turbo TwinAir 105 HP/1.4 Turbo MultiAir)	SAE 0W-30 ACEA C2 grade totally synthetic lubricant. 9.55535-GS1 specification	**SELENIA DIGITEK P.E.** Contractual Technical Reference no. F020.B12	According to Scheduled Servicing Plan
Lubricant for petrol engines (1.4 Petrol)	SAE 5W-40 ACEA C3 grade totally synthetic lubricant. 9.55535-S2 specification	**SELENIA StAR P.E.** Contractual Technical Reference no. F603.D08	According to Scheduled Servicing Plan
Lubricant for diesel engines	SAE 0W-30 grade totally synthetic lubricant. 9.55535-DS1 specification	**SELENIA WR FORWARD** Contractual Technical Reference No. F842.F13	According to Scheduled Servicing Plan

In case of emergency, if lubricants with the prescribed specifications are not available, products with the minimum indicated ACEA performance can be used for topping up; in this case optimal performance of the engine is not guaranteed.

For Turbo TwinAir 105 HP and MultiAir system engines only use lubricants with **indicated SAE grade** and specifications.

The use of products with different specifications than those indicated above could cause damage to the engine not covered by the warranty.

Use	Fluid and lubricant features for a correct use of the car	Genuine fluids and lubricants	Applications
Lubricants and greases for drive transmission system	SAE 75W grade synthetic lubricant. Specification 9.55550-MZ6.	**TUTELA TRANSMISSION GEARFORCE** Contractual Technical Reference No. F002.F10	Gearboxes and differentials (mechanical)
	Molybdenum disulphide grease, for use at high temperatures. NL.G.I. 1-2 consistency 9.55580 specification	**TUTELA ALL STAR** Contractual Technical Reference No. F702.G07	Wheel side constant velocity joints
	Grease for constant velocity joints with low friction coefficient. NL.GI. 0-1 consistency 9.55580 specification	**TUTELA STAR 700** Contractual Technical Reference No. F701.C07	Differential side constant velocity joints
Brake fluid	Synthetic fluid for brake and clutch systems. Exceeds specifications: FMVSS no. 116 DOT 4, ISO 4925, SAEJ1704, 9.55597 specification	**TUTELA TOP 4** Contractual Technical Reference No. F001.A93	Brake and clutch hydraulic controls

Use	Fluid and lubricant features for a correct use of the car	Genuine fluids and lubricants	Applications
Protective agent for radiators	Red protective agent with antifreeze action, based on inhibited monoethylene glycol with organic formula. Exceeds CUNA NC 956-16, ASTM D 3306 specifications. 9.55523 specification	**PARAFLU^{UP}** (*) Contractual Technical Reference No. F101.M01	Mixture: 50% water and 50% **PARAFLU^{UP}** (**)
Diesel fuel additive	Antifreeze additive for diesel, with protective action for diesel engines.	**TUTELA DIESEL ART** Contractual Technical Reference No. F601.L06	To be mixed with the diesel (25 cc per 10 litres)
Washer fluid for windscreen/rear window/ headlamps	Mixture of alcohol, water and surfactants CUNA NC 956-11 9.55522 specification	**TUTELA PROFESSIONAL SC 35** Contractual Technical Reference No. F201.D02	To be used diluted or undiluted in windscreen/rear window washer/wiper systems

(*)IMPORTANT Do not use fluids with different specifications for topping up or mixing.
(**)For particularly harsh climate conditions, a mixture of 60% **PARAFLU^{UP}** and 40% distilled water is recommended.

FUEL CONSUMPTION

The fuel consumption figures given in the table below are determined on the basis of the type-approval tests laid down by specific European Directives.

The procedures below are followed for measuring consumption:

❒ urban cycle: cold starting followed by driving that simulates urban use of the car;

❒ extra-urban cycle: frequent accelerating in all gears, simulating extra-urban use of the car: speed varies between 0 and 120 km/h;

❒ combined fuel consumption: calculated with a weighting of approximately 37% of the urban cycle and 63% of the extra-urban cycle.

IMPORTANT The type of route, traffic conditions, weather conditions, driving style, general condition of the car, trim level/equipment/accessories, use of the climate control, car load, presence of roof racks and other situations that adversely affect the aerodynamics or wind resistance lead to different fuel consumption figures than those measured.

IMPORTANT The fuel consumption will get more regular only after having driven the first 3000 km.

FUEL CONSUMPTION ACCORDING TO THE CURRENT EUROPEAN DIRECTIVE (litres/100 km)

Versions	Urban	Extra-urban	Combined
0.9 Turbo TwinAir 105 HP (*) (**)	5,0	3,8	4,2
1.4 Petrol 8V 70 HP (***)	7.6	4.7	5.8
1.4 Petrol 8V 78 HP (**)	7.3	4.6	5.6
1.4 Turbo MultiAir 135 HP	7,4	4,5	5,6
1.4 Turbo MultiAir 170 HP Quadrifoglio Verde	8,1	4,8	6,0
1.3 JTD_{M-2} 85 HP (**)	4.4	2.9	3.5
1.3 JTD_{M-2} 85 HP (**) (****)	4.6	3.0	3.6
1.3 JTD $_{M-2}$ 85 HP (**) (****)	4,3	2,8	3,4
1.6 JTD_{M} 115/120 HP (**)	5.2	3.7	4.3

(*) Type approval test starting in 2nd gear.
(**) Versions with Start&Stop
(***) Versions without Start&Stop
(****) For versions/markets, where provided

CO_2 EMISSIONS

The CO_2 emission levels given in the following tables refer to combined consumption.

Versions	CO_2 emissions according to the current European directive (g/km)
0.9 Turbo TwinAir 105 HP (*)	99
1.4 Petrol 8V 70 HP (**)	134
1.4 Petrol 8V 78 HP (*)	130
1.4 Turbo MultiAir 135 HP (***)	128
1.4 Turbo MultiAir 170 HP Quadrifoglio Verde	139
1.3 JTD $_{M-2}$ 85 HP	90
1.3 JTD $_{M-2}$ 85 HP (***)	95
1.3 JTD $_{M-2}$ 85 HP (***)	88
1.6 JTD$_M$ 115/120 HP	112

(*) Versions with Start&Stop
(**) Versions without Start&Stop
(***) For versions/markets, where provided

PRESCRIPTIONS FOR HANDLING THE VEHICLE AT THE END OF ITS LIFE

For years, Alfa Romeo has pursued a global commitment to protect and respect the environment by continually improving its production processes and developing increasingly eco-compatible products. To ensure its customers the best possible service in compliance with environmental standards and in response to obligations arising out of European Directive 2000/53/EC on end of life vehicles, Alfa Romeo offers its customers the chance to hand back their vehicles (*) at the end of their life cycle at no additional cost.

The European Directive sets out that when the vehicle is handed over the last keeper or owner should not incur any expenses as a result of it having a zero or negative market value. In particular, in almost all European Union countries, until 1st January 2007, vehicles registered after 1st July 2002 will be collected free of charge, whilst from 2007 collection will be free of charge irrespective of the year of registration as long as the vehicle contains its basic components (in particular, the engine and bodywork) and has no additional waste.

To hand your vehicle over at the end of its life without extra cost, contact one of our dealerships or an Alfa Romeo authorised collection and scrapping centre. These centres have been carefully chosen to offer high-quality service for the collection, treatment and recycling of vehicles at their end of life, respecting the surrounding environment.

You can find further information on these collection and scrapping centres either from an Alfa Romeo Dealership or by calling the freephone number 00800 2532 0000 or on the Alfa Romeo website.

(*) Vehicle for transporting passengers with a maximum of nine seats and a total permitted weight of 3.5 t

DASHBOARD

The presence and position of controls, instruments and gauges may vary according to different versions.

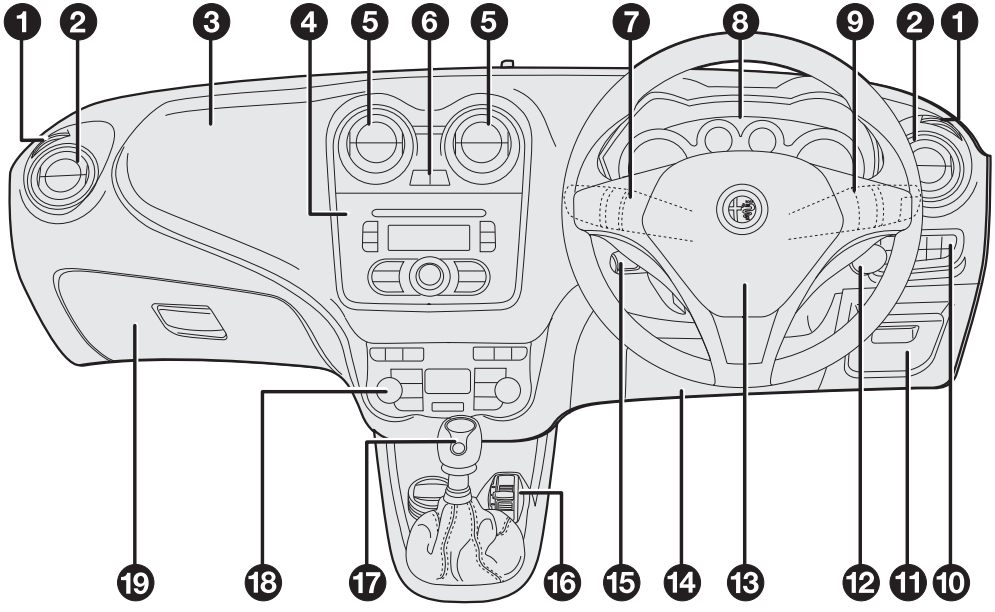

fig. 1 A0J0393

1. Air vent for side windows – 2. Adjustable air vent – 3. Passenger front air bag – 4. Sound system (for versions/markets, where provided) – 5. Adjustable air vents – 6. Hazard warning lights, door lock/unlock button – 7. Exterior lighting control lever – 8. Instrument panel – 9. Windscreen wiper/rearscreen wiper/trip computer control lever – 10. Control panel – 11. Fuse box access flap – 12. Ignition device – 13. Driver front air bag – 14. Driver front knee air bag (for versions/markets, where provided) – 15. Cruise Control (for versions/markets, where provided) – 16. "Alfa DNA" system – 17. Gear lever – 18. Heating/ventilation/climate control system controls – 19. Glove compartment

CONTROL PANEL AND INSTRUMENTS

VERSIONS WITH MULTIFUNCTIONAL DISPLAY

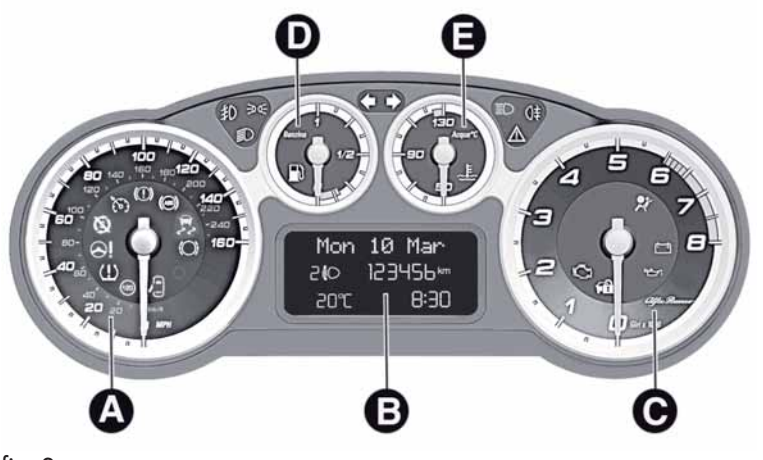

fig. 2 A0J1542

A. Speedometer (speed indicator) B. Multifunctional display C. Rev counter D. Fuel level gauge with reserve warning light E. Engine coolant temperature gauge and excessive temperature warning light

and warning lights supplied in diesel versions only. On diesel versions the rpm gauge end of scale is set at 6000 rpm.

WARNING Instrument background colour and type may vary according to the version.

VERSIONS WITH RECONFIGURABLE MULTIFUNCTIONAL DISPLAY

fig. 3 A0J1543

A. Speedometer (speed indicator) B. Reconfigurable multifunctional display C. Rev counter D. Fuel level gauge with reserve warning light E. Engine coolant temperature gauge and excessive temperature warning light

and warning lights supplied in diesel versions only. On diesel versions the rpm gauge end of scale is set at 6000 rpm.

WARNING Instrument background colour and type may vary according to the version.

page intentionally left blank

S O U N D S Y S T E M

TABLE OF CONTENTS

INTRODUCTION 239
ADVICE 239
TECHNICAL CHARACTERISTICS 240
BASIC LEVEL SYSTEM 240

QUICK GUIDE 241
GENERAL FUNCTIONS 242
RADIO FUNCTIONS 243
CD FUNCTIONS 243

STEERING WHEEL CONTROLS 244

GENERAL INFORMATION 245

FUNCTIONS AND ADJUSTMENTS 247
SWITCHING ON THE RADIO 247
SWITCHING OFF THE RADIO 247
SELECTING THE RADIO FUNCTIONS 247
SELECTING CD FUNCTION 247
AUDIO SOURCE MEMORY FUNCTION 247
VOLUME ADJUSTMENT 247
MUTE/PAUSE FUNCTION (zeroing the volume) 247
AUDIO SETTINGS 248
TONE ADJUSTMENT (bass/treble) 248
BALANCE ADJUSTMENT 248
FADER ADJUSTMENT 248
LOUDNESS FUNCTION 249
PRESET/USER/CLASSIC/ROCK/JAZZ FUNCTIONS 249
USER EQ SETTINGS FUNCTION 249
MENU 249
AF SWITCHING function 250
TRAFFIC INFORMATION function 250
REGIONAL MODE function 251
MP3 DISPLAY function 252
SPEED VOLUME function 252
RADIO ON VOLUME function 252
PHONE FUNCTION 253
AUX OFFSET function 253
RADIO OFF function 253
SYSTEM RESET function 253
PHONE SET-UP 254
ANTI-THEFT PROTECTION 254

RADIO (TUNER) 255
INTRODUCTION 255
FREQUENCY BAND SELECTION 255
PRESET BUTTONS 256
STORING THE LAST STATION LISTENED TO 256
AUTOMATIC TUNING 256
MANUAL TUNING 256
AUTOSTORE FUNCTION 256
EMERGENCY ALARM RECEPTION 257
EON FUNCTION (Enhanced Other Network) 257
STEREOPHONIC BROADCASTERS 257

CD PLAYER 258
INTRODUCTION 258
SELECTING THE CD PLAYER 258
LOADING/EJECTING A CD 258
DISPLAY INFORMATION 259
TRACK SELECTION (forward/back) 259
TRACK FAST FORWARD/REWIND 259
PAUSE FUNCTION 259

MP3 CD PLAYER 260
INTRODUCTION 260
MP3 MODE 260

SELECTING MP3 SESSIONS ON HYBRID DISCS 260
DISPLAY INFORMATION 261
SELECTING NEXT/PREVIOUS FOLDER 261
STRUCTURE OF THE FOLDERS 261
AUX 262
INTRODUCTION..... 262
AUX MODE..... 262
TROUBLESHOOTING..... 263
GENERAL..... 263
CD PLAYER..... 263
MP3 FILE READING 263

INTRODUCTION

The radio has been designed according to the passenger compartment's specific characteristics and with a personalised design that complements the style of the dashboard.

The instructions for use are given below. We recommend that you read them carefully.

ADVICE

Road safety

Familiarise yourself with the various car radio functions (e.g. storing radio stations), before starting to drive.

Reception conditions

Reception conditions change constantly while driving. Reception may be interfered with by the presence of mountains, buildings or bridges, or when you are far away from the broadcaster.

Note The volume may be increased when receiving traffic alerts and news.

If the volume is too loud this could be dangerous for the driver and for passengers when driving in traffic. Always adjust the volume so that you can still hear background noises.

Maintenance and care

Only clean the cover with a soft, anti-static cloth. Cleaning and polishing products may damage the surface.

CD

Dirt, scratches or any distortions on CDs may cause skipping during playback and poor sound quality. Follow these tips for optimum playback conditions:

❒ only use CDs with the following mark:

❒ clean every CD thoroughly removing any fingerprints or dust using a soft cloth. Hold CDs by the circumference and clean them from the centre towards the edge;

❒ never use chemical products (e.g. antistatic or thinner spray cans) for cleaning as they could damage the surface of the CDs;

❒ after listening to them place CDs back in their cases to avoid them being damaged;

❒ do not expose CDs to direct sunlight, high temperatures or moisture for long periods;

❒ do not stick labels on the surface of the CD and do not write on the recorded surface using pens or pencils;

- ❐ Never use CDs that are very scratched, cracked, distorted, etc. Their use could cause damage to the player or make it malfunction;
- ❐ to achieve the best quality audio reproduction we recommend the use of original CD media. Correct operation is not guaranteed when CD-R/RW media are used that were not correctly burnt and/or with a maximum capacity above 650 Mb;
- ❐ do not use commercially available protective sheets for CDs or discs with stabilisers as they could get stuck in the internal mechanism and damage the disc;
- ❐ if a copy-protected CD is used, it may take a few seconds before the system starts to play it. The CD player cannot be guaranteed to play all protected discs. The presence of copy protection is often indicated in small or difficult to read letters on the cover of the CD; like, for example, "COPY CONTROL", "COPY PROTECTED", "THIS CD CANNOT BE PLAYED ON A PC/MAC" or may be identified through the use of symbols, such as, for example:

- ❐ The CD player is able to read most of the compression systems currently on the market (e.g.:LAME, BLADE, XING, FRAUNHOFER) but as these systems are continually evolving, playback of all compression formats is not guaranteed.

TECHNICAL CHARACTERISTICS

Maximum power: 4x40 W

BASIC LEVEL SYSTEM

Standard level audio

Front speakers

- ❐ 2 × tweeters, ∅ 38 mm;
- ❐ 2 × mid-woofer speakers, ∅ 165 mm.

Rear speakers

- ❐ 2 × full-range speakers, ∅ 165 mm.

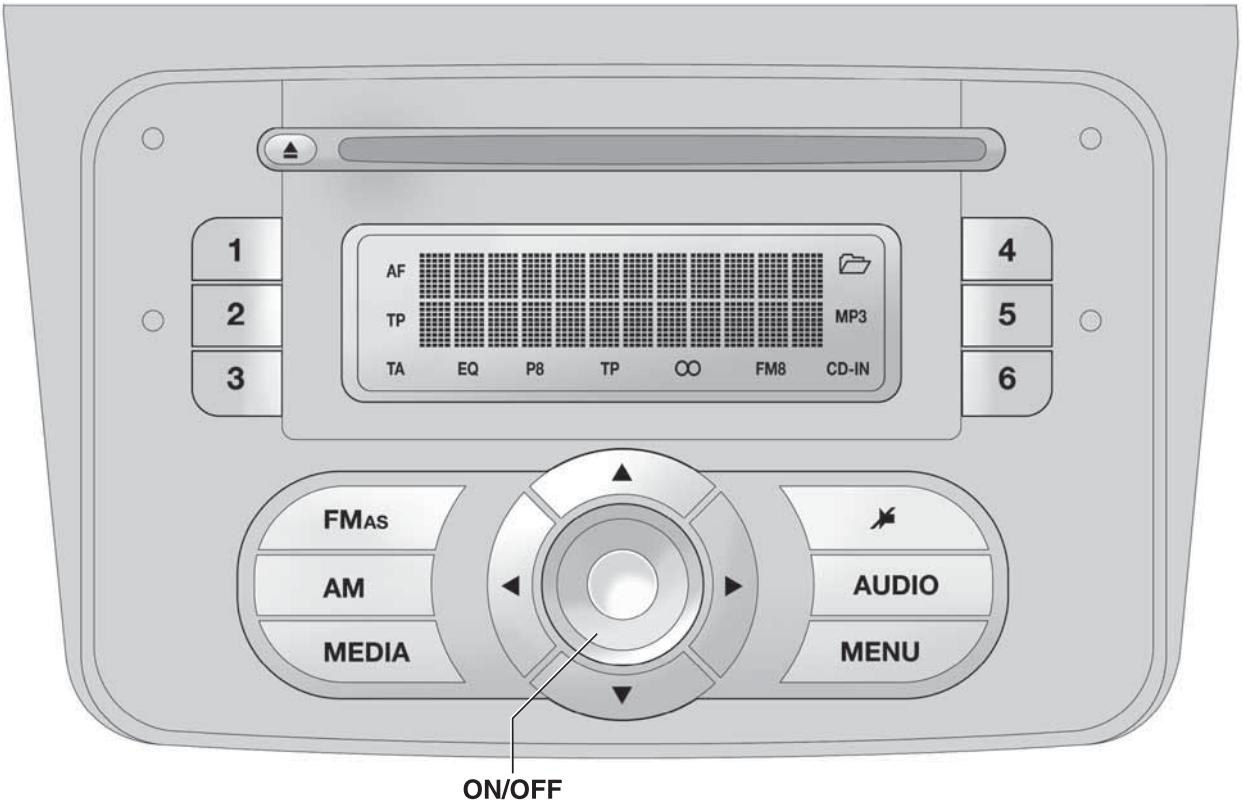

fig. 1

A0J0001

GENERAL FUNCTIONS

Button	Functions	Mode
ON/OFF	Switching on	Brief button press
	Switching off	Brief button press
	Volume adjustment	LH/RH knob rotation
FM AS	Selection of radio source FM1, FM2, FM Autostore	Brief cyclical button press
AM	MW1, MW2 radio source selection	Brief cyclical button press
MEDIA	CD or AUX source selection (for versions/markets, where provided)	Brief cyclical button press
🔇	Volume activation/deactivation (MUTE/PAUSE)	Brief button press
AUDIO	Audio adjustments: low tones (BASS), high tones (TREBLE), RH/LH balance (BALANCE), front/rear balance (FADER)	Menu activation: brief button press Selection of adjustment type: pressing buttons ▲ or ▼ Adjustment of values: pressing buttons ◀ or ▶
MENU	Advanced functions adjustment	Menu activation: brief button press Selection of adjustment type: pressing buttons ▲ or ▼ Adjustment of values: pressing buttons ◀ or ▶

RADIO FUNCTIONS

Button	Functions	Mode
▲▼◀▶	Radio station search: - Automatic search - Manual search	Automatic search: press buttons ◀ or ▶ (hold down for fast forward) Manual search: press buttons ▲ or ▼ (hold down for fast forward)
1 2 3 4 5 6	Store current radio station	Long button press for memory preset 1 to 6 respectively
	Stored station recall	Brief button press for memory preset 1 to 6 respectively

CD FUNCTIONS

Button	Functions	Mode
⏏	CD ejection	Brief button press
◀▶	Play previous/next track	Pressing ◀ or ▶ buttons briefly
	CD track fast forward/rewind	Pressing ◀ or ▶ buttons briefly
▲▼	Playing previous/next folder (for CD-MP3)	Pressing ▲ or ▼ buttons briefly

STEERING WHEEL CONTROLS

(for versions/markets, where provided)

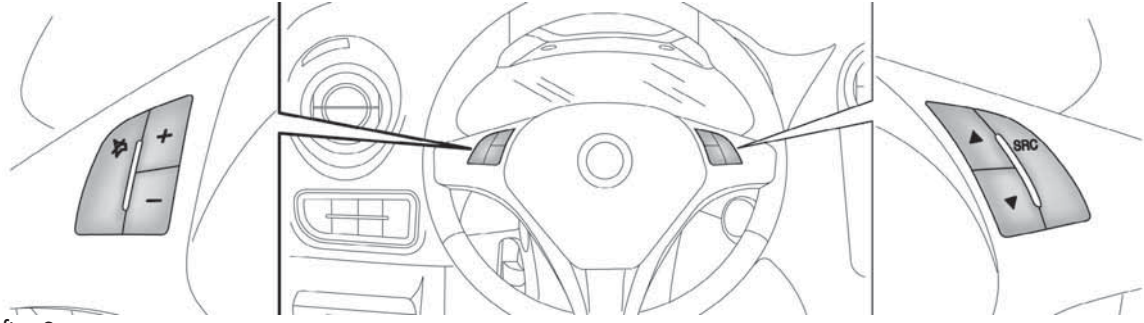

fig. 2 A0J0052

Button	Functions	Mode
🔇	AudioMute switching on/off (Radio mode) or Pause function (MP3 mode)	Brief button press
+	Volume increase	Button press
–	Volume decrease	Button press
SRC	Radio frequency range selection (FM1, FM2, FMT, FMA, MW) and listening sources: Radio, MP3 or AUX (for versions/markets, where provided)	Button press
▲	Radio: recall stored stations (from 1 to 6) CD/CD MP3: select next track	Button press
▼	Radio: recall stored stations (from 6 to 1) CD/CD MP3: select previous track	Button press

NOTE Starting from the FM or AM source set on the radio (e.g. FM1 or MW1), if you cycle through the audio sources using the SRC button among the steering wheel controls (stopping on a source other than radio) when the radio source is selected (FM or AM) using the buttons on the radio panel, the radio always switches to the last radio source (FMA or MW2).

GENERAL INFORMATION

The radio offers the following functions:

Radio section

❒ PLL tuning with FM/AM/MW frequency bands;

❒ RDS (Radio Data System) with TA (traffic alerts) function - TP (traffic programmes) - EON (Enhanced Other Network) - REG (regional programmes);

❒ AF: search selection for alternative frequencies in RDS mode;

❒ provision for emergency alarm;

❒ automatic/manual tuning of stations;

❒ FM Multipath detector;

❒ manual storing of 30 stations: 18 on FM band (6 on FM1, 6 on FM2, 6 on FMT), 12 on MW band (6 on MW1, 6 on MW2);

❒ automatic memorization (AUTOSTORE function) of 6 stations in the dedicated FM band;

❒ SPEED VOLUME function (excluding versions with Bose Hi-Fi system): speed-dependent automatic volume adjustment;

❒ automatic Stereo/Mono selection.

CD section

❒ Direct selection of the disc;

❒ Track selection (forward/back);

❒ Fast advance (forward/back) through tracks;

❒ CD Display function: display of disc name and time elapsed since the start of the track;

❒ Playing of audio CDs, CD-Rs and CD-RWs.

Multimedia CDs include data tracks in addition to the audio tracks. Playing this type of CD can cause hissing at a volume that may jeopardise road safety as well as causing damage to the final stages and the speakers.

MP3 CD section

❒ MP3-Info function (ID3-TAG);

❒ Folder selection (previous/next);

❒ Track selection (forward/back);

❒ Fast advance (forward/back) through tracks;

❒ MP3 Display function: display of name of folder, ID3-TAG information, time elapsed since the start of the track, name of the file);

❒ Playing of audio or data CDs, CD-Rs and CD-RWs.

Audio section

❒ Mute/Pause function;

❒ Soft-Mute function;

❒ Loudness function (excluding versions with Bose HI-FI system);

❒ 7-band graphic equaliser (excluding versions with Bose HI-FI system);

❒ Separate bass/treble adjustment;

❒ Right/left channel balance.

AUX section

(for versions/markets, where provided)

❒ AUX source selection;

❒ AUX Offset function: alignment of the portable device volume with that of the other sources;

❒ Portable player playback.

FUNCTIONS AND ADJUSTMENTS

SWITCHING ON THE RADIO

The radio switches on when the ON/OFF button is pressed briefly.

When the radio is turned on, the volume is limited to level 20 if it was set to a higher value when previously used or to level 5 if it was previously set to value 0 or to Mute/Pause. The previously set value is maintained in all other cases.

When the radio is switched on with the key extracted from the ignition, it switches off automatically after about 20 minutes. After the radio has switched itself off automatically it can be switched on for a further 20 minutes by pressing the ON/OFF button.

SWITCHING OFF THE RADIO

Briefly press the ON/OFF button.

SELECTING THE RADIO FUNCTIONS

By pressing the FM AS button quickly and repeatedly, the following audio sources can be selected cyclically:

❒ TUNER (“FM1”, “FM2”, “FMA”).

By pressing the AM button briefly and repeatedly, the following audio sources can be selected cyclically:

❒ TUNER (“MW1”, “MW2”).

SELECTING CD FUNCTION

By pressing the MEDIA button briefly it is possible to select the CD function.

AUDIO SOURCE MEMORY FUNCTION

If another function (e.g. the radio) is selected whilst listening to a CD, playback is interrupted and is resumed from the same point when returning to the CD source.

If another function is selected whilst listening to the radio, the last station selected is tuned into when returning to Radio mode.

VOLUME ADJUSTMENT

To adjust the volume, turn the ON/OFF knob.

If the volume level is changed during the transmission of traffic news, the new setting will only be maintained until the update is finished.

MUTE/PAUSE FUNCTION (zeroing the volume)

Press the button briefly to activate the Mute function. The volume will gradually decrease and the words “RADIO Mute” (in radio mode) or “PAUSE” (in CD mode) will be displayed.

Press the button again to deactivate the Mute function. The volume will gradually increase until it reaches the level set previously.

When the volume level is changed using the dedicated controls, the Mute function is deactivated and the volume is adjusted to the new level selected.

With the Mute function activated, it will be ignored when there is an incoming traffic alert (if the TA function is activated), or if an emergency alarm is received. The function will be reactivated when the alert is over.

AUDIO SETTINGS

The functions that can be selected from the audio menu change depending on the context: AM/FM/CD/AUX (for versions/markets, where provided).

Press the AUDIO button briefly to change the Audio functions.

After the AUDIO button is first pressed, the display will show the bass level value for the source activated at that time (e.g. in FM mode the display will show the wording "FM Bass + 2").

Use the ▲ or ▼ buttons to scroll through the menu functions. To change the setting of the function selected use the ◀ or ▶ buttons. The current status of the function selected will be shown on the display.

The functions managed by the Menu are:

❒ BASS (adjustment of bass tones);

❒ TREBLE (adjustment of high tones);

❒ BALANCE (right/left balance adjustment);

❒ FADER (front/back balance adjustment);

❒ LOUDNESS (LOUDNESS function activation/deactivation);

❒ EQUALISER (activation and selection of factory-set equaliser levels);

❒ USER EQUALISER (customised equaliser setting).

TONE ADJUSTMENT (bass/treble)

Proceed as follows:

❒ Use ▲ or ▼ buttons to set the "Bass" or "Treble" in the AUDIO menu;

❒ press the ◀ or ▶ button to increase/decrease the bass or treble.

By pressing the buttons briefly, the levels will change progressively in steps. By pressing them for longer, the levels will change quickly.

BALANCE ADJUSTMENT

Proceed as follows:

❒ Select the "Balance" setting in the AUDIO menu using the ▲ or ▼ button;

❒ press the ◀ button to increase the volume of the right speakers or the ▶ button to increase the volume of the left speakers.

By pressing the buttons briefly, the levels will change progressively in steps. By pressing them for longer, the levels will change quickly.

Select the value "◀ 0 ▶ " to set the same level for the right and left audio outputs.

FADER ADJUSTMENT

Proceed as follows:

❒ Select the "Fader" setting in the AUDIO menu using the ▲ or ▼ button;

❒ press the ◀ button to increase the sound from the rear speakers or the ▶ button to increase the sound from the front speakers.

By pressing the buttons briefly, the levels will change progressively in steps. By pressing them for longer, the levels will change quickly.

Select the value "◀ 0 ▶ " to set the same level for the front and rear audio outputs.

LOUDNESS FUNCTION

The Loudness function improves the volume of the sound whilst listening at low volumes, increasing the bass and treble.

To activate/deactivate the function, select the Loudness setting of the AUDIO menu using the ◀ or ▶ buttons.

The condition of the function (on or off) is shown on the display for a few seconds by the wording "Loudness On" or "Loudness Off".

PRESET/USER/CLASSIC/ROCK/JAZZ FUNCTIONS
(equaliser activation/deactivation)

The built-in equaliser can be activated/deactivated. When the equaliser function is off, the audio settings can only be changed by adjusting the "Bass" and "Treble" settings, whereas when the function is on, the acoustic curves can be adjusted.

To deactivate the equaliser, select the "EQ Preset" function using the buttons ◀ or ▶ .

To activate the equaliser, use the ◀ or ▶ buttons to select one of the adjustments:

❒ "FM/AM/CD...EQ User" (adjustment of 7 equaliser bands that can be changed by the user);

❒ "Classic" (equaliser preset for optimal classical music sound);

❒ "Rock" (equaliser preset for optimal rock and pop music sound);

❒ "Jazz" (equaliser preset for optimal jazz music sound).

When one of the equaliser settings is activated the letters "EQ" light up.

USER EQ SETTINGS FUNCTION
(equaliser settings only if the USER setting is selected)

To set a personalised equaliser adjustment, set to "User" using the ▲ or ▼ button and press the MENU button.

A 7-bar graph appears on the display, in which each bar represents a frequency.

Select the bar to adjust using the ◀ or ▶ buttons; the selected bar will start to flash and it can be adjusted using the ▲ or ▼ buttons.

To store the setting, press the AUDIO button again. The display will show the active source at that time followed by the word "USER". If the mode is "FM", for example, the display will show the text "FM EQ User".

MENU

MENU button functions

Press the MENU button briefly to activate the Menu function. The display will show the first menu item that can be adjusted (AF) ("AF Switching On" on the display).

Use the ▲ or ▼ buttons to scroll through the menu functions. To change the setting of the function selected use the ◀ or ▶ buttons.

The current status of the function selected will be shown on the display.

The functions managed by the Menu are:

❒ AF SWITCHING (ON/OFF);

❒ TRAFFIC INFORMATION (ON/OFF);

❒ REGIONAL MODE regional programmes (ON/OFF);

❒ MP3 DISPLAY (CD MP3 display settings);

❒ SPEED VOLUME (speed-dependent automatic volume control);

❒ RADIO ON VOLUME (radio volume limit activation/deactivation);

❒ SPEECH VOLUME (telephone volume adjustment) (for versions/markets, where provided);

❒ AUX OFFSET (alignment of the portable device volume to that of the other sources) (for versions/markets, where provided);

❒ RADIO OFF (switching-off mode);

❒ SYSTEM RESET

Press the MENU button again to exit the Menu function.

Note The AF SWITCHING, TRAFFIC INFORMATION and REGIONAL MODE adjustments are only possible in FM mode.

AF SWITCHING function
(alternative frequency search)

The radio can operate in two different modes using RDS:

❒ "AF Switching On": search for alternative frequencies active (the letters "AF" appear on the display);

❒ "AF Switching Off": search for alternative frequencies not active.

Proceed as follows to activate/deactivate the function:

❒ press the MENU button and select "AF Switching On";

❒ press the ◀ /▶ buttons to activate/deactivate the function.

When the function is activated, the radio automatically tunes into the station with the strongest signal broadcasting the same programme. While driving, the same station can be continuously listened to without having to change the frequency when you change zones.

Obviously, it must be possible to receive the station that you are listening to in the area you are driving through.

If the AF function has been activated, "AF" will light up in the display.

If the AF function has been activated and the radio is not able to receive the current station, the radio activates the automatic search, during which "FM Search" appears on the display (only for top-of-the-range radios).

With the AF function deactivated, the remaining RDS functions, such as the display of the station name, still remain active.

The AF function can only be activated on FM bands.

TRAFFIC INFORMATION function
(traffic information)

Some stations on the FM band (FM1, FM2 and FMA) can broadcast information about traffic conditions. In this case the letters "TA" appear on the display.

Proceed as follows to switch the TA function on/off:

❒ press the MENU button briefly and select "Traffic info";

❒ press the ◀ /▶ buttons to activate/deactivate the function.

If the TA function has been activated, the "TA" icon lights up on the display.

Note If the TA function is activated with an audio source other than Tuner (Radio) (CD, MP3, telephone or Mute/Pause), the radio can carry out an automatic search and therefore it is possible, when reactivating the Tuner (Radio) source, that the frequency tuned into is different from the one previously set.

With the TA function, it is possible to:

❒ search only for RDS stations that broadcast in FM and are enabled to broadcast traffic information;

❒ receive traffic information even when the CD player is in operation;

❒ receive traffic information at a minimum preset volume even with the radio volume off.

Note In some countries there are radio stations that, even with the TP function activated, do not transmit traffic information (the "TP" icon appears on the display).

If the radio is tuned to a station in the AM band, when TA is activated it will tune into the last selected station in the FM1 band.

The volume at which the traffic news is transmitted depends on the listening volume:

❒ listening volume below 5: traffic news volume 5 (fixed value);

❒ listening volume above 5: traffic news volume equal to listening volume +1.

If the volume is changed during traffic news, the level will not be shown on the display; the new level will only be maintained during the news.

While traffic information is being received, "TRAFFIC INFORMATION" will appear on the display.

The TA function can be interrupted by pressing any button on the radio.

REGIONAL MODE function
(regional transmission reception)

Some national broadcasters will transmit regional programmes at certain times of the day (that vary from region to region).

This function makes it possible to tune into local (regional) broadcasters automatically (see "EON function" paragraph).

If you want the radio to automatically tune into the regional stations being broadcast on the selected network, the function must be activated.

To activate/deactivate the function use the ◀ or ▶ buttons.

The current status of the function appears on the display:

❒ "Regional On": function activated;

❒ "Regional Off": function deactivated.

If the function is deactivated and you have tuned into a regional station working in a given area and you enter a different area, then the regional station received in the new area will be broadcast.

Note If the AF and REG functions are on at the same time, once a border between two regions is crossed, the radio may not switch correctly to a valid alternative frequency.

MP3 DISPLAY function
(MP3 CD data display)

This function makes it possible to select the information shown by the display when listening to a CD containing MP3 tracks.

The function can only be selected if an MP3 CD is inserted: in this case "MP3 Display" will appear on the display.

To change the function, use the ◀ or ▶ buttons.

The following settings are available:

❒ "Title" (track title, if the ID3-TAG is available);

❒ "Author" (track author, if the ID3-TAG is available);

❒ "Album" (track album, if the ID3-TAG is available);

❒ "Folder" name (name assigned to the folder);

❒ "File" name (name assigned to the MP3 file).

SPEED VOLUME function
(speed-based volume change)

This function automatically adapts the volume level to the speed of the car, increasing the volume when the speed increases to maintain the ratio with the noise level inside the passenger compartment.

To activate/deactivate the function, press the ◀ /▶ buttons. The words "Speed volume" appear on the display, followed by the current status of the function:

❒ Off: function deactivated

❒ Low: function activated (low sensitivity)

❒ High: function activated (high sensitivity).

RADIO ON VOLUME function
(radio volume limit activation/deactivation)

This function makes it possible to activate/deactivate the volume limits when the radio is turned on.

The display shows the function status:

❒ "Radio on vol – Limit on": when the radio is switched on the volume level will be:

– if the volume level is equal to or higher than the maximum value, the radio will switch on at the maximum volume;

– if the volume level is between the minimum and maximum values, the radio will switch on at the same volume as before it was switched off.

❒ "Radio on vol – Limit off": the radio will switch on at the volume level it was at before switching off. The volume may be between 0 and 40.

To change the setting of the selected function, use the ◀ /▶ buttons.

NOTES

❒ Using the Menu it is only possible to adjust the activation/deactivation of the function and not the minimum or maximum volume value.

❒ If the "TA" or "TEL" functions or an external audio source are activated when the radio is turned on, the radio will switch on at the volume set for these sources. When the external audio source is deactivated, the volume can be adjusted between the minimum and maximum levels.

❒ If the battery charge is low, it will not be possible to adjust the volume between the minimum and maximum levels.

PHONE FUNCTION
(telephone volume adjustment)

With Speech volume function present in Menu

This function makes it possible to adjust (settings from 1 to 40), by turning the ON/OFF left knob/button or pressing the ◀ /▶ buttons, or mute (OFF setting) the volume of the telephone.

The display shows the current function status:

❒ "Speech Off": function deactivated.

❒ "Speech volume 23": function active with volume setting 23.

With Speech volume function not present on the Menu

When a phone call is received, the audio passes to the car's audio system through the radio.

The telephone audio always arrives at a fixed volume, but it can be adjusted during a conversation using the ON/OFF button/knob.

AUX OFFSET function
(alignment of the portable device volume with that of the other sources)
(for versions/markets, where provided)

This function enables the alignment of the volume of the AUX source, depending on its own portable player, with that of the other sources.

To activate the function, press the MENU button and select "AUX offset".

Press the ◀ or ▶ buttons to decrease or increase the volume value (set from – 6 to + 6).

RADIO OFF function
(on and off mode)

This function is used to set the radio switching-off mode to one of two different settings.

To activate the function, use the ◀ or ▶ button.

The selected mode will appear on the display:

❒ "00 MIN": the radio switches off automatically in connection with the ignition key; the radio switches off automatically as soon as the key is turned to STOP position;

❒ "20 MIN": the radio switches off independently of the ignition key; the radio remains switched on for a maximum period of 20 minutes after the key has been turned to STOP position.

SYSTEM RESET function

This function is used to restore all settings to the factory values.

The options are:

❒ NO: no restore intervention;

❒ YES: the default parameters will be restored. During this operation, the word "Resetting" appears on the display. At the end of the operation, the source does not change and the previous situation will be displayed.

PHONE SET-UP

If a hands-free kit is installed on the car, when there is an incoming phone call the radio audio will be connected to the telephone output. The telephone audio always arrives at a fixed volume, but it can be adjusted during a conversation using the ON/OFF button/knob.

The fixed telephone audio volume can be adjusted using the "SPEECH VOLUME" function in the Menu (where the function is provided). The word "PHONE" will appear on the display during the deactivation of the audio for the phone call.

ANTI-THEFT PROTECTION

The radio is equipped with an anti-theft protection system based on the exchange of information between the radio and the electronic control unit (Body Computer) on the car.

This system guarantees maximum safety and avoids the entry of the secret code each time the radio power supply is disconnected.

If the check has a positive outcome, the radio will start to function, whereas if the comparison codes are not the same or if the electronic control unit (Body Computer) is replaced, the device will ask the user to enter the secret code according to the procedure described in the paragraph below.

Entering the secret code

When the radio is switched on, if the code is requested, the display will show “Radio code” for about 2 seconds followed by four dashes “- - - -”.

The code is made up of four numbers from 1 to 6, each corresponding to one of the dashes.

To enter the first digit of the code, press the corresponding button of the pre-selected stations (from 1 to 6). Enter the other code numbers in the same way.

If the four digits are not entered within 20 seconds, the display will show “Enter code - - - -”. If this occurs, it is not considered an incorrect code entry.

After entering the fourth digit (within 20 seconds), the radio will start to operate.

If an incorrect code is entered, the radio will emit a sound and the display shows the text "Radio blocked/wait" to notify the user of the need to enter the correct code.

Each time the user enters an incorrect code, the waiting time will gradually increase (1 min, 2 min, 4 min, 8 min, 16 min, 30 min, 1 h, 2 h, 4 h, 8 h, 16 h, 24 h) up to a maximum of 24 hours.

The waiting time will be shown on the display with the text “Radio blocked/wait”. After the text has disappeared it is possible to start the code entry procedure again.

Car radio passport

This document certifies ownership of the radio. The car radio passport shows the radio model, serial number and secret code.

Note Keep this car radio passport in a safe place so that you can give the information to the relevant authorities if the car radio is stolen.

In case of loss of the car radio passport, contact the Alfa Romeo Authorised Services, taking an ID document and the car ownership documents.

RADIO (TUNER)

INTRODUCTION

When the radio is switched on, the last function selected before it was switched off is activated: Radio, CD, CD MP3 or AUX (only with) (for versions/markets, where provided).

To select the Radio function when another audio source is being listened to, briefly press the FM AS or AM buttons depending on the desired band.

Once the Radio mode has been activated, the display will show the name (RDS stations only) and the frequency of the selected radio station, the frequency band selected (e.g. FM1) and the preselect button number (e.g. P1).

FREQUENCY BAND SELECTION

With the Radio mode active, press the FM AS or AM button briefly and repeatedly to select the desired reception band.

Each time the button is pressed the following bands are selected cyclically:

❒ By pressing the FM AS button: “FM1”, “FM2” or “FMA”;

❒ By pressing the AM button: “MW1, MW2”.

Each band is highlighted by the name in the display. The last station selected on the respective frequency band will be tuned into.

The FM band is divided into sections: FM1, FM2 or “FMA”; the FMA reception band is reserved for broadcasters stored automatically using the AutoSTore function.

PRESET BUTTONS

The buttons numbered from 1 to 6 are used to set the following preset stations:

❒ 18 in the FM band (6 in FM1, 6 in FM2, 6 in FMT or "FMA" (on some versions));

❒ 12 in the MW band (6 in MW1, 6 in MW2).

To listen to a preset station, select the desired frequency band and then briefly press the corresponding preset button (from 1 to 6).

By pressing the preset button for more than 2 seconds, the current station will be stored.

The storing phase is confirmed by an acoustic signal.

STORING THE LAST STATION LISTENED TO

The radio automatically stores the last station that was selected for each reception band, which is then tuned into when the radio is turned on or when the reception band is changed.

AUTOMATIC TUNING

Briefly press the ◀ or ▶ button to start the automatic tuning search for the next station that can be received in the selected direction.

If the ◀ or ▶ button is pressed down longer, the fast search starts. When the button is released, the tuner will stop on the next station that can be received.

If the TA function (traffic alerts) is on, the tuner will only search for stations that broadcast traffic news and alerts.

MANUAL TUNING

This is used to manually search for stations in the preselected band.

Select the desired frequency band and then press the ▲ or ▼ button briefly and repeatedly to start to the search in the desired direction.

If the ▲ or ▼ buttons are pressed longer, the fast search will start and then stop when the button is released.

AUTOSTORE FUNCTION
(automatic station storing)

To activate the AutoSTore function, hold the FM AS button down until an acoustic signal is heard. With this function, the radio automatically stores the 6 stations with the strongest signal in decreasing order on the FMA frequency band.

During the automatic storing process, the word "Autostore" flashes on the display.

Press the FM AS button again to interrupt the AutoSTore function: the radio will again tune into the station listened to before the activation of the function.

When the AutoSTore function has finished, the radio will automatically tune into the first preset station on the FMA band stored on the preset side 1.

The stations that have a strong signal in the preselected band at that moment, are then automatically stored on the buttons numbered from 1 to 6.

When the AutoSTore function is activated within the MW band, the FMA band is automatically selected and the function is performed there.

Note Sometimes the AutoSTore function is not able to find 6 stations with a strong signal. In this case, the strongest stations will be duplicated in the tree preset buttons.

Note When the AutoSTore function is activated, the stations that were previously stored in the FMA band are deleted.

EMERGENCY ALARM RECEPTION

The radio is configured to receive emergency alerts in RDS mode in exceptional circumstances or where dangerous situations are present (earthquakes, floods, etc.) if these are being transmitted by the current broadcaster.

This function is activated automatically and cannot be turned off.

The word "Alarm" will be shown in the display during the transmission of an emergency announcement. The volume of the radio will change during this announcement in the same way as during a traffic bulletin.

EON FUNCTION (Enhanced Other Network)

In some countries, there are circuits that group multiple broadcasters that transmit traffic information together. In this case, the programme of the station that is being listened to will be temporarily interrupted to:

- ❒ receive traffic alerts (only with the TA function activated);
- ❒ listen to regional transmissions each time these are broadcast by one of the broadcasters on the same circuit.

STEREOPHONIC BROADCASTERS

If the incoming signal is weak, playback is automatically switched from Stereo to Mono.

CD PLAYER

INTRODUCTION

This section describes the variants regarding the operation of the CD player: as far as the operation of the radio is concerned, refer to the description in the "Functions and Adjustments" chapter.

SELECTING THE CD PLAYER

To activate the CD player built into the equipment, proceed as follows:

❒ insert a CD with the equipment switched on: the first track will start to play;

or

❒ if a CD has already been loaded, switch on the radio and then briefly press the CD button to select the "CD" operating mode: the last track listened to will start to play.

It is advisable to use original CDs to ensure optimum playback. If CD-R/RWs are used, we recommend using good quality media mastered at the slowest speed possible.

LOADING/EJECTING A CD

To load the CD, insert it gently into the slot to activate the motorised loading system, which will position it correctly.

The CD can be loaded with radio off and the ignition key turned to MAR: in this case the radio will remain off. When the radio is turned on, the last source listened to prior to switching off will be activated.

When a CD is inserted the display will show the symbol "CD-IN" and the text "CD Reading". They will remain displayed for the entire time required for the radio to read the CD tracks. When this time has elapsed the radio will automatically start to play the first track.

Press the ▲ button with the radio on to activate the motorised ejection of the CD. After ejection, the last audio source listened to before playing the CD will be heard.

If the CD is not removed from the radio, it will automatically be reloaded about 20 seconds later and the Tuner mode will be activated (Radio).

The CD cannot be ejected if the radio is off.

If the ejected CD is reloaded without having removed it completely from the slot, the radio will not switch to the CD source.

Possible error messages

If the CD loaded cannot be read (e.g. a CD ROM has been inserted or the CD is inserted upside down or there is reading error) the display will show the text "CD Disc error".

The CD will then be ejected and the audio source activated prior to the CD mode selection will be heard.

With an external audio source activated ("TA", "ALARM" or "Phone"), the CD that cannot be read will not be ejected until these functions have ended. At the end, with the CD mode activated, the display will show the text "CD Disc error" for a few seconds and then the CD will be ejected.

DISPLAY INFORMATION

When the CD player is working, the display will show the following information:

❒ "CD Track 5": indicates the number of the CD track;

❒ "03:42": indicates the time elapsed since the start of the track (if the relevant Menu function is activated).

TRACK SELECTION (forward/back)

Briefly press the ◀ button to play the previous CD track and the ▶ button to play the next track.

The tracks are selected cyclically: the first track is selected after the last track and vice versa.

If the track has been played for more than 3 seconds, pressing the ◀ button will cause the track to be started again from the beginning.

In this case, if you want to play the previous track, press the button twice consecutively.

TRACK FAST FORWARD/REWIND

The fast forward/rewind will stop once the button is released.

PAUSE FUNCTION

To pause the CD player, press the button. The text "CD Pause" appears on the display.

To resume listening to the track, press the button again.

If another audio source is selected, the pause function is deactivated.

MP3 CD PLAYER

INTRODUCTION

This section only describes the variants regarding the operation of the CD MP3 player: as far as the operation of the radio is concerned, refer to the description in the "Radio" and "CD MP3 Player" sections.

NOTE MPEG Layer-3 audio decoding technology licensed from Fraunhofer IIS and Thomson multimedia.

MP3 MODE

In addition to playing regular audio CDs, the radio is also able to play CD-ROMs on which audio files have been stored using the MP3 compression format. The radio operates as described in the "CD Player" section when an ordinary audio CD is inserted.

To guarantee optimal playback quality it is advisable to use good quality CDs mastered at the lowest speed possible.

The files on an MP3 CD are structured by folder, creating lists of all the folders containing MP3 tracks (folders and subfolders are all displayed on the same level); the folders that do not contain MP3 tracks cannot be selected.

The operating conditions and specifications for playing MP3 files are as follows:

- ❐ the CD-ROMs used should be burnt according to the ISO 9660 standard;
- ❐ the music files must have an ".mp3" extension: files with a different extension cannot be played;
- ❐ the following sampling frequencies can be played: 44.1 kHz, stereo (96 to 320 kbit/s) - 22.05 kHz, mono or stereo (32 to 80 kbit/s);
- ❐ tracks with a variable bit-rate can be reproduced.

Note The names of tracks must not contain the following characters: spaces, ' (apostrophes), (and) (open and close brackets). When burning an MP3 CD, make sure that the names of the files do not contain these characters; if they do, the radio will not be able to play the tracks involved.

SELECTING MP3 SESSIONS ON HYBRID DISCS

If a hybrid disc is inserted (Mixed Mode, Enhanced, CD-Extra) also containing MP3 files, the radio automatically starts playing the audio session. It is possible to switch to the MP3 session whilst playing by holding the MEDIA button down for more than 2 seconds.

Note When the function is activated the radio may take a few seconds to start playing. Whilst checking the disc the display will show "CD READING". If no MP3 files are detected, the radio will resume playing the audio session from the point where it was interrupted.

DISPLAY INFORMATION

ID3-TAG information display

In addition to the information relating to the time elapsed, the name of the folder and the name of the file, the radio is also capable of displaying ID3-TAG information relating to the Track Title, Artist and Author.

The name of the MP3 folder shown on the display corresponds to the name with which the folder was stored on the CD, followed by an asterisk.

Example of a complete MP3 folder name: BEST OF *.

When ID3-TAG data is chosen to be displayed (Title, Artist, Album) that has not been recorded for the track played, the information will be replaced by that relating to the name of the file.

SELECTING NEXT/PREVIOUS FOLDER

Press the ▲ button to select a subsequent folder or press the ▼ button to select a previous folder.

The display will show the number and the name of the folder (e.g. "DIR 2 XXXXXX").

XXXXXX: name of the folder (the display will only show the first 8 characters).

The folders are selected cyclically: the first folder is selected after the last folder and vice versa.

If no other folder/track is selected in the next 2 seconds, the first track on the new folder will be played.

If the last track in the folder at that moment selected is played, the next folder will be played.

STRUCTURE OF THE FOLDERS

The radio with MP3 player:

❒ recognises only the folders that contain MP3 format files;

❒ if the MP3 files on a CD-ROM are structured in sub-folders, their structure is compressed to a single level structure where the sub-folders are taken to the level of the main folders.

AUX
(for versions/markets, where provided)

INTRODUCTION

This section describes the variants regarding the operation of the AUX source: as far as the operation of the radio is concerned, refer to the description in the "Functions and Adjustments" section.

AUX MODE

To activate the AUX source, press the MEDIA button or the SRC control on the steering wheel repeatedly until the corresponding source is displayed.

The AUX socket is located on the central tunnel next to the power socket (or next to the cigar lighter socket, depending on the versions) fig. 3.

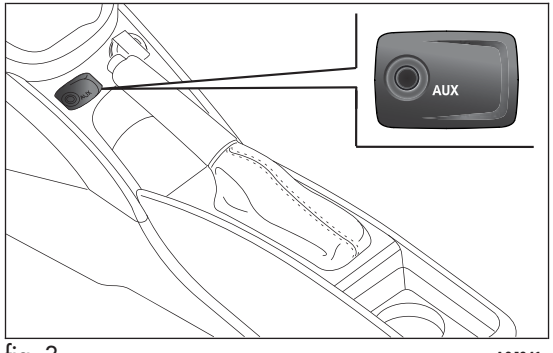

fig. 3 A0J041

IMPORTANT

The functions of the device connected with the AUX socket are directly managed by the device itself; it is not possible to change track/folder/playlist with radio or steering wheel controls.

Do not leave the cable of your portable player connected to the AUX socket after disconnecting, to avoid possible hiss from the speakers.

TROUBLESHOOTING

GENERAL

Low volume

The Fader function should be adjusted only to the values "F" (front) to prevent a reduction in radio output power and the muting of the volume if the Fader level adjustment is equal to R+9.

Source cannot be selected

Nothing has been inserted.

Insert the CD or CD MP3 to be played.

CD PLAYER

The CD does not play

The CD is dirty. Clean the CD.

The CD is scratched. Try and use another CD.

The CD cannot be loaded

A CD is already loaded. Press the ▲ button and remove the CD.

MP3 FILE READING

Track skips during MP3 file playback

The CD is scratched or dirty. Clean the CD, referring to the contents of the "CD" paragraph in the "Introduction" section.

The duration of the MP3 tracks is not shown correctly

In some cases (due to the recording mode) the duration of the MP3 tracks may be displayed incorrectly.

PETRONAS SELENIA MOTOR OIL

In the heart of your engine.

Always ask your mechanic for PETRONAS SELENIA MOTOR OIL

Oil change? The experts recommend Petronas Selenia

The engine of your car is factory filled with ***Petronas Selenia.*** *This is an engine oil range which satisfies the most advanced international specifications. Its superior technical characteristics allow* ***Petronas Selenia*** *to guarantee the* ***highest performance and protection of your engine.***

The Petronas Selenia range includes a number of technologically advanced products:

SELENIA StAR PURE ENERGY
Fully synthetic lubricant capable of meeting the needs of high performance engines. Studied to protect the engine also in high thermal stress conditions, it prevents deposits on the turbine to achieve the utmost performance in total safety.

SELENIA WR PURE ENERGY
Fully synthetic lubricant that can meet the requirements of the latest diesel engines. Low ash content to protect the particulate filter from the residual products of combustion. High Fuel Economy System that allows considerable fuel saving. It reduces the danger of dirtying the turbine to ensure the protection of increasingly high performance diesel engines.

SELENIA MULTIPOWER GAS PURE ENERGY
Fully-synthetic lubricant designed for petrol engines also turbocharged, powered with methane or LPG. Its exclusive formulation improves valve protection against wear, neutralises the acid compounds formed by combustion and keeps engine performance levels unchanged.

SELENIA SPORT POWER
Fully synthetic lubricant capable of meeting the needs of high performance engines.
Studied to protect the engine also in high thermal stress conditions, it prevents deposits on the turbine to achieve the utmost performance in total safety.

The range also includes Petronas Selenia si completa con Selenia StAR, Selenia 20K AR, Selenia Turbo Diesel, Selenia Sport Selenia Racing.
For further information on Petronas Selenia products visit the web site www.pli-petronas.eu

NOTES

INDEX

ABS system 88
– Mechanical Brake Assist 88
– System intervention 88
Additional heater 59
Air cleaner 186
Alarm 40

"Alfa DNA" system 91
– Driving modes 92
– Engagement/disengagement of "All Weather" mode 94
– Engagement/disengagement of "Dynamic" mode 93
– "Natural" Mode 92

Alfa Romeo Code system 34
Ashtray 73
ASR system (AntiSlip Regulation) 90
Automatic dual zone climate control 53

Battery 186
– advice for extending lifetime 186
– replacement 186
Battery (recharging) 168
Bodywork
– maintenance 193
– protection against atmospheric agents 192
– warranty 193
Bonnet 84
– Closing 84
– Opening 84
Brake Assist 90
Brakes 207
– brake fluid level 185
bulb replacement 156-157
– interior lights 158
Bulb replacement
– exterior lights 154
Bulbs
– types of bulbs 152

Carrying children safely 114
CBC (Cornering Brake Control) system 90
Central locking 70
Changing a bulb 151
– General instructions 151
Changing a wheel 140
Checking levels 178
Cigar lighter 72
Cleaning and maintenance
– bodywork 192
– car interior 194
– front headlights 194
– leather parts 195
– leather seats 195
– plastic and coated parts 195
– seats and fabric parts 194
Climate control/heating system 50
Climatic comfort 49
– Diffusers 49
Clutch 206
CO2 emissions 229
Code Card 35
Control buttons 22
Control panel and instruments 4
– Multifunction display 4
– Reconfigurable multifunction display 5
Controls 69
Courtesy light
– bulb replacement 159
Cruise Control 65

Dashboard 3
Daytime running lights (DRL) 59
Diesel filter 186
Diesel particulate filter (DPF) 108

Dimensions 216
Dipped headlights
– bulb replacement 155
Direction indicators 61-156
– bulb replacement 155
– "Lane change" function 61
Display 20
Doors 77
– Door central locking/unlocking 77
DPF (particulate filter) 108
Driver side knee bag 126
DST system (Dynamic Steering Torque) 91
Dusk sensor 60
Dynamic Suspension (active shock absorber system) 98
Electric power steering 100
Electric sun roof 74
Electric windows 79
– Controls 79
"Electronic Q2" system ("E-Q2") 90
Engine codes - bodywork versions 198
Engine compartment
– washing 194
Engine coolant temperature gauge 6
Engine 200
– engine cooling system fluid level 184
– marking 197
Engine oil
– consumption 184
– level check 184
EOBD system 99
ESC (Electronic Stability Control) system 89
Exterior lights 59
– Left stalk 59
External courtesy lights 62
Extinguisher 74
Fitting "Universal" child seat 116
Fix&Go Automatic Kit 146
Flashing 61
Fluids and lubricants 224
Fog lights 70-156
"Follow Me Home" device 61
Front airbags 123
Front armrest 72
Front driver side airbag 123
Front passenger airbag 124
Front roof light
– bulb replacement 158
Fuel consumption 227
Fuel cut-off system 70
Fuel level gauge 6
Fuel supply 206
Fuel tank cap 107
Fuses (if a fuse blows) 161
Gear Shift Indicator 21
Glove compartment 71
Glove compartment light
– bulb replacement 159
Handbrake 133
Hazard warning lights 69
Headlights 87
– Adjusting headlights abroad 87
– bulb replacement 154
– Headlight alignment corrector 87
– Light beam direction 87
Headlight washers 192
Head restraints 45
– "Anti-Whiplash" device 46
– Front headrests 45
– Rear head restraints 46
Hill Holder system 89
Identification data
– bodywork paint plate 197

– Chassis marking 197
– engine marking 197
– identification data plate 196
Ignition device 42
– Steering lock 42
Installation of electrical/electronic devices 100
Installing a Universal Isofix child seat 120
Interior fittings 71
Interiors (cleaning) 194
Jack 141
Light clusters
– front light clusters (changing a bulb) 154
– rear light clusters (changing a bulb) 156
Lubricants (features) 224
Luggage compartment 81
– Closing the luggage compartment 82
– Emergency luggage compartment opening 82
– Extending the luggage compartment 83
– Luggage compartment initialisation 82
– Opening the luggage compartment 81
Luggage compartment roof light
– bulb replacement 158
Main beam headlights 61
– bulb replacement 154
Maintenance and care
– heavy-duty use of the car 177
– periodic checks 177
Menu options 24
MSR system 90
Multifunction display 20
Number plate lights
– bulb replacement 157
Parking 132
– Handbrake 133
Parking lights 60
Parking sensors 101
Performance 217
Pollen filter 186
Power sockets 72
Preparation for "Isofix" child seat 119
Pretensioners 112
– Load limiters 112
Protecting the environment 108
Puddle light
– bulb replacement 160
Radio transmitters and mobile phones 101
Rain sensor 63
Raising the car 169
Rear fog light 70
Rear fog light/reversing light 157
Rear view mirrors 47
– Door mirrors 47
– Internal mirror 47
Rear window washer jets 192
Rear window washer
– rear window washer fluid level 185
Rear window washer/wiper 64
Rear Window Wiper
– blade replacement 191
– blades 189
Reconfigurable multifunction display 20
Refuelling 221
Refuelling the car 107
Rev counter 6
Rim Protector (tyres) 211
Roof lights 67
– Courtesy lights 68
– Front roof light 67
– Glove compartment light 69

– Luggage compartment roof light 68
– Puddle lights 68
Roof rack/ski rack 86

Safe Lock device 37
Saving fuel 135
SBR system (Seat Belt Reminder) 110
Scheduled servicing 171
Scheduled Servicing Plan 172
Seat belts 109
– Use 109
Seats 43
– Easy Entry 44
– Front seats 43
– Sports configuration front seats 44
Setup menu 23
Side airbags (Side Bags - Window Bags) 126
Side bags (front side airbags) 127
Side lights/brake lights 156
Side lights/daytime running lights (DRL)
– bulb replacement 154
Side lights/dipped beam headlights 60
"Smart Bag" system (Multistage front airbags) 123

Snow chains 138
Snow tyres 137
Spark plugs (type) 200
Speedometer (speed indicator) 6
Starting the engine 130
Starting the engine 139
– Bump starting 140
– Jump starting 139
Start&Stop system 95
Steering lock 42
Steering system 208
Steering wheel 46
Storing the car 138
Sun visors 73
Suspension 207
Symbols 33

Technical specifications 196
The keys 35
– Code Card 35
– Key without remote control 35
– Key with remote control 35
Third brake lights
– bulb replacement 157
Towing the car 169
– Attaching the tow hook 169
Towing trailers 136
– Installing a tow hook 137
TPMS (Tyre Pressure Monitoring System) 104
Transmission 206
TRIP button 32
Trip Computer 30
Tyres
– correct tyre reading 209
– Fix&Go Automatic (kit) 146
– inflation pressure 214
– snow tyres 212
– tyres provided 212
Tyres - maintenance 188

Using the Gearbox 133

Warning lights on panel 6
Weights 218
Welcome movement 22
Wheel rims
– correct reading of the rim code 211
– dimensions 212
– wheels and tyres 188

Wheels and tyres
– changing a wheel..... 140
– Fix&Go Automatic (kit) 146
– spare wheel 209
– tyre inflation pressure..... 214
– Wheels and tyres 188
Wheels
– rims and tyres 209
Window bags (side airbags for head protection)..... 127
Window cleaning..... 62
Windows (cleaning) 194
Windscreen washer
– windscreen washer fluid level 185
Windscreen washer sprays 191
Windscreen washer/wiper..... 62
– "Smart washing" function..... 63
Windscreen wiper
– blades 189
– replacing wiper blades 190

MOPAR
TECHNICAL SERVICES – SERVICE ENGINEERING
FCA Italy S.p.A. - Largo Senatore G. Agnelli, 3 - 10040 Volvera - Torino (Italia)
Publication no. 60438743 – 3 Edition – 10/2015
All rights reserved. Reproduction, even in part is prohibited without written permission
from FCA Italy S.p.A.

SAFETY

⚠ The bonnet, the bumper and the headlamps of this vehicle have been developed as integral part of the passive safety systems of your car to ensure an optimum protection to pedestrians and to all passengers. For this, in case of replacement, be sure to choose genuine parts of the bodywork which are specifically developed for your car.

ENGLISH

Alfa Services