Q60

2020 OWNER'S MANUAL AND MAINTENANCE INFORMATION

INFINITI®

For your safety, read carefully and keep in this vehicle.

CALIFORNIA PROPOSITION 65 WARNING

⚠WARNING

Operating, servicing and maintaining a passenger vehicle or off-highway motor vehicle can expose you to chemicals including engine exhaust, carbon monoxide, phthalates, and lead, which are known to the State of California to cause cancer and birth defects or other reproductive harm. To minimize exposure, avoid breathing exhaust, do not idle the engine except as necessary, service your vehicle in a well-ventilated area and wear gloves or wash your hands frequently when servicing your vehicle. For more information go to www.P65Warnings.ca.gov/passenger-vehicle.

Foreword

This manual was prepared to help you understand the operation and maintenance of your vehicle so that you may enjoy many miles (kilometers) of driving pleasure. Please read through this manual before operating your vehicle.

A separate Warranty Information Booklet is included in your Owner's literature portfolio. Always carry it with you when you take your vehicle to an INFINITI retailer. The Warranty Information Booklet contents provide complete information about all warranties covering this vehicle, the requirements to keep the warranties in effect as well as the INFINITI Roadside Assistance program.

Additionally, a separate Customer Care and Lemon Law Information Booklet will explain how to resolve any concerns you may have with your vehicle, as well as clarify your rights under your state's lemon law.

In addition to factory installed options, your vehicle may also be equipped with additional accessories installed by INFINITI or by your INFINITI retailer prior to delivery. It is important that you familiarize yourself with all disclosures, warnings, cautions and instructions concerning proper use of such accessories prior to operating the vehicle and/or accessory. It is recommended you see an INFINITI retailer for details concerning the particular accessories with which your vehicle is equipped.

READ FIRST – THEN DRIVE SAFELY

Before driving your vehicle, read your Owner's Manual carefully. This will ensure familiarity with controls and maintenance requirements, assisting you in the safe operation of your vehicle.

WARNING

IMPORTANT SAFETY INFORMATION REMINDERS!

Follow these important driving rules to help ensure a safe and comfortable trip for you and your passengers!

- **NEVER drive under the influence of alcohol or drugs.**
- **ALWAYS observe posted speed limits and never drive too fast for conditions.**
- **ALWAYS give your full attention to driving and avoid using vehicle features or taking other actions that could distract you.**
- **ALWAYS use your seat belts and appropriate child restraint systems. Pre-teen children should be seated in the rear seat.**
- **ALWAYS provide information about the proper use of vehicle safety features to all occupants of the vehicle.**
- **ALWAYS review this Owner's Manual for important safety information.**

MODIFICATION OF YOUR VEHICLE

This vehicle should not be modified. Modification could affect its performance, safety or durability, and may even violate governmental regulations. In addition, damage or performance problems resulting from modification will not be covered under the INFINITI warranties.

WARNING

Installing an aftermarket On-Board Diagnostic (OBD) plug-in device that uses the port during normal driving, for example remote insurance company monitoring, remote vehicle diagnostics, telematics or engine reprogramming, may cause interference or damage to vehicle systems. We do not recommend

or endorse the use of any aftermarket OBD plug-in devices, unless specifically approved by INFINITI. The vehicle warranty may not cover damage caused by any aftermarket plug-in device.

WHEN READING THE MANUAL

This manual includes information for all features and equipment available on this model. Features and equipment in your vehicle may vary depending on model, trim level, options selected, order, date of production, region or availability. Therefore, you may find information about features or equipment that are not included or installed on your vehicle.

All information, specifications and illustrations in this manual are those in effect at the time of printing. INFINITI reserves the right to change specifications, performance, design or component suppliers without notice and without obligation. From time to time, INFINITI may update or revise this manual to provide owners with the most accurate information currently available. Please carefully read and retain with this manual all revision updates sent to you by INFINITI to ensure you have access to accurate and up-to-date information regarding your vehicle. Current versions of vehicle Owner's Manuals and any updates can also be found in the owner section of the INFINITI website at https://owners.infinitiusa.com/owners/navigation/manualsandGuides. If you have questions concerning any information in your Owner's Manual, contact INFINITI Consumer Affairs. See the INFINITI CUSTOMER CARE PROGRAM page in this Owner's Manual for contact information.

IMPORTANT INFORMATION ABOUT THIS MANUAL

You will see various symbols in this manual. They are used in the following ways:

WARNING

This is used to indicate the presence of a hazard that could cause death or serious personal injury. To avoid or reduce the risk, the procedures must be followed precisely.

CAUTION

This is used to indicate the presence of a hazard that could cause minor or moderate personal injury or damage to your vehicle. To avoid or reduce the risk, the procedures must be followed carefully.

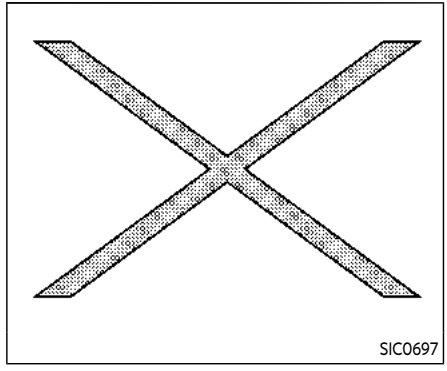

If you see the symbol above, it means **"Do not do this"** or **"Do not let this happen"**.

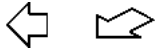

If you see a symbol similar to those above in an illustration, it means the arrow points to the front of the vehicle.

Arrows in an illustration that are similar to those above indicate movement or action.

Arrows in an illustration that are similar to those above call attention to an item in the

illustration.

CALIFORNIA PERCHLORATE ADVISORY

Some vehicle parts, such as lithium batteries, may contain perchlorate material. The following advisory is provided: "Perchlorate Material - special handling may apply, See www.dtsc.ca.gov/hazardouswaste/perchlorate."

INFINITI®

© 2019 NISSAN MOTOR CO., LTD.

All rights reserved. No part of this Owner's Manual may be reproduced or stored in a retrieval system, or transmitted in any form, or by any means, electronic, mechanical, photocopying, recording or otherwise, without the prior written permission of Nissan Motor Co., Ltd.

INFINITI CUSTOMER CARE PROGRAM

INFINITI CARES ...

Both INFINITI and your INFINITI retailer are dedicated to serving all your automotive needs. Your satisfaction with your vehicle and your INFINITI retailer are our primary concerns. Your INFINITI retailer is always available to assist you with all your automobile sales and service needs.

However, if there is something that your INFINITI retailer cannot assist you with or you would like to provide INFINITI directly with comments or questions, please contact our (INFINITI's) Consumer Affairs Department using our toll-free number:

For U.S. customers
1-800-662-6200
For Canadian customers
1-800-361-4792

The Consumer Affairs Department will ask for the following information:

- Your name, address, and telephone number
- Vehicle identification number (on dash panel)
- Date of purchase
- Current odometer reading
- Your INFINITI retailer's name
- Your comments or questions

OR

You can write to INFINITI with the information on the left at:

For U.S. customers
INFINITI Division
Nissan North America, Inc.
Consumer Affairs Department
P.O. Box 685003
Franklin, TN 37068-5003
or via e-mail at:
nnaconsumeraffairs@nissan-usa.com
For Canadian customers
INFINITI Division
Nissan Canada Inc.
5290 Orbitor Drive
Mississauga, Ontario L4W 4Z5
or via e-mail at:
information.centre@nissancanada.com

If you prefer, visit us at:

www.infinitiUSA.com (for U.S. customer) or

www.infiniti.ca (for Canadian customers)

We appreciate your interest in INFINITI and thank you for buying a quality INFINITI vehicle.

Table of Contents

Illustrated table of contents	0
Safety – Seats, seat belts and supplemental restraint system	1
Instruments and controls	2
Pre-driving checks and adjustments	3
Monitor, climate, audio, phone and voice recognition systems	4
Starting and driving	5
In case of emergency	6
Appearance and care	7
Do-it-yourself	8
Maintenance and schedules	9
Technical and consumer information	10
Index	11

0 Illustrated table of contents

Seats, seat belts and Supplemental Restraint System (SRS) 0-2
Exterior front 0-3
Exterior rear 0-4
Passenger compartment 0-5
Cockpit 0-6
Instrument panel 0-8
Meters and gauges 0-9
Engine compartment 0-10
VR30DDTT engine 0-10
Warning and indicator lights 0-11

SEATS, SEAT BELTS AND SUPPLEMENTAL RESTRAINT SYSTEM (SRS)

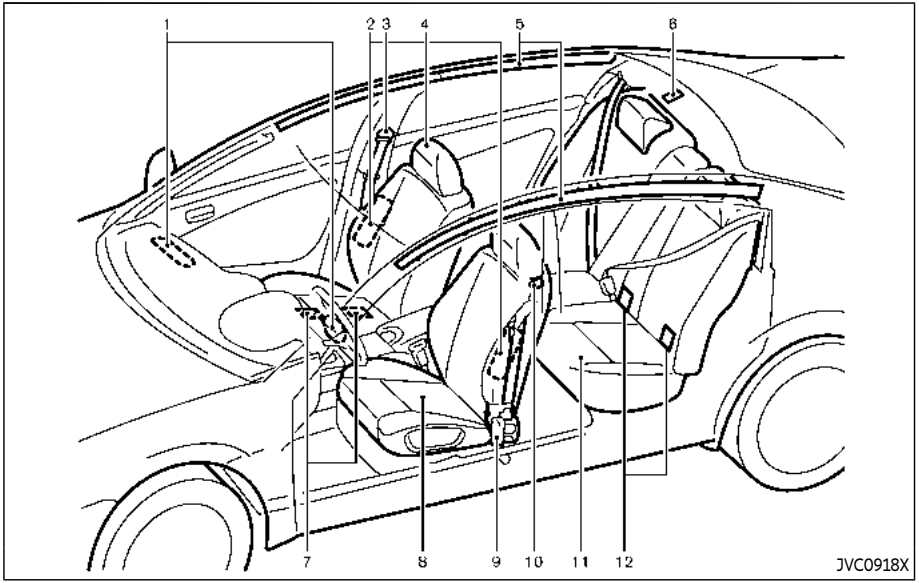

1. Supplemental front-impact air bags (P.1-38)
2. Front seat-mounted side-impact supplemental air bags (P.1-38)
3. Seat belts (P.1-11)
4. Head restraints (P.1-7)
5. Roof-mounted curtain side-impact and rollover supplemental air bags (P.1-38)
6. Child restraint anchor points (for top tether strap child restraint) (P.1-23, P.1-30, P.1-34)
7. Occupant classification sensors (weight sensors) (P.1-44)
8. Front seats (P.1-3)
9. Seat belts with pretensioners (P.1-54)
10. Rear seat walk-in mechanism (P.1-5)
11. Rear seats (P.1-6)
    – Child restraints (P.1-19)
12. LATCH (Lower Anchors and Tethers for CHildren) system (P.1-21)

EXTERIOR FRONT

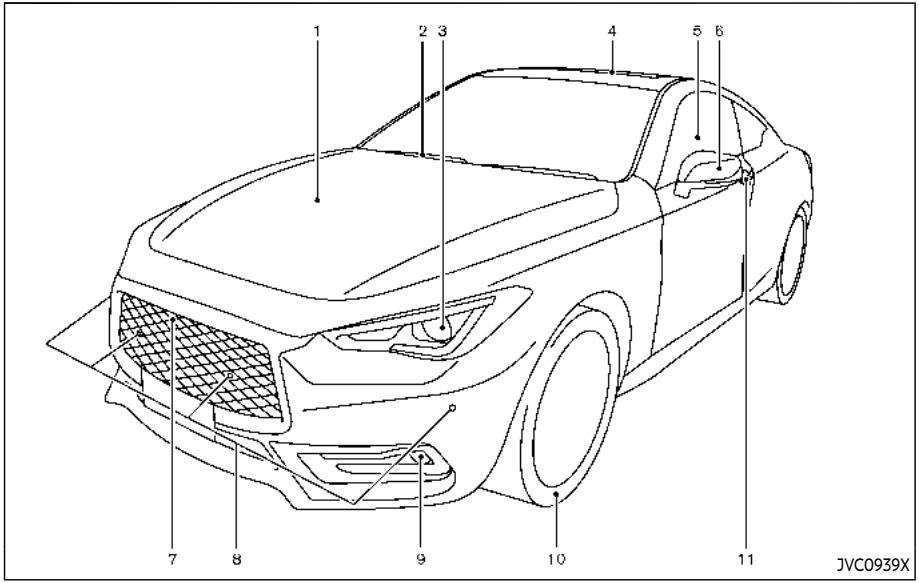

1. Hood (P.3-22)
2. Windshield wiper and washer
   – Switch operation (P.2-34)
   – Window washer fluid (P.8-10)
3. Headlights and turn signal lights (P.2-38)
   – Adaptive Front lighting System (AFS) (if so equipped) (P.2-42)
4. Moonroof (if so equipped) (P.2-55)
5. Power windows (P.2-52)
6. Outside mirrors (P.3-31)
   – Side turn signal lights (P.2-43)
   – Side view camera (if so equipped) (P.4-11)
7. Front view camera (if so equipped) (P.4-11)
8. Sonar sensors (if so equipped)
   – Camera aiding sonar function (P.4-24)
   – Sonar system (P.5-133)
9. Fog lights (P.2-44)
10. Tires
    – Wheels and tires (P.8-25, P.10-9)
    – Flat tire (P.6-3)
    – Tire Pressure Monitoring System (TPMS) (P.2-14, P.5-5)
11. Doors
    – Keys (P.3-2)
    – Door locks (P.3-4)
    – Intelligent Key system (P.3-6)
    – Remote keyless entry system (P.3-15)
    – Remote engine start (if so equipped) (P.3-19)
    – Courtesy light (P.2-59)

EXTERIOR REAR

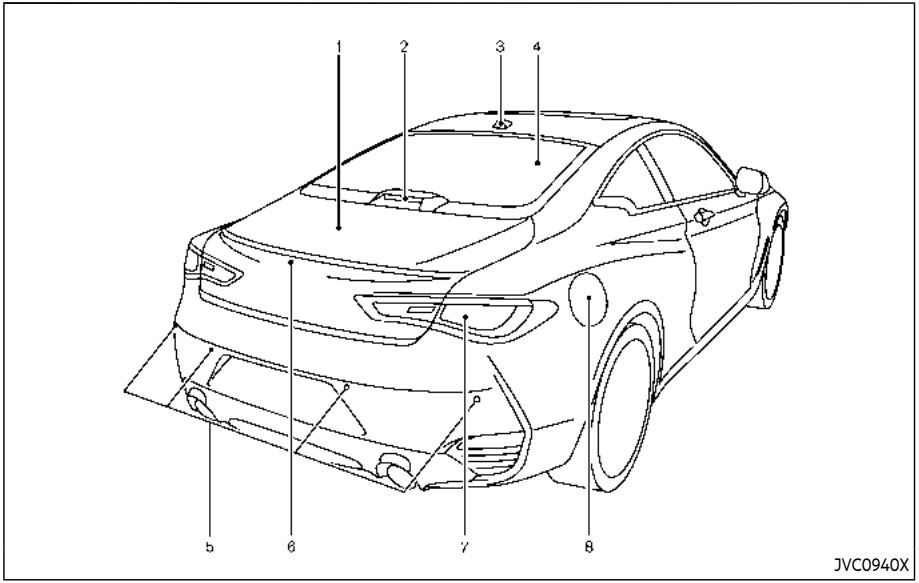

1. Trunk lid (P.3-22)
   – Intelligent Key system (P.3-6)
   – Remote keyless entry system (P.3-15)
2. High-mounted stop light (P.8-22)
3. Satellite antenna (P.4-42)
4. Rear window defroster (P.2-37)/Antenna (P.4-42)
5. Sonar sensors (if so equipped)
   – Camera aiding sonar function (P.4-24)
   – Sonar system (P.5-133)
6. Rear view camera
   – RearView Monitor (if so equipped) (P.4-3)
   – Around View® Monitor (if so equipped) (P.4-11)
7. Rear combination light (P.8-22)
8. Fuel-filler door (P.3-25)
   – Fuel information (P.10-4)

PASSENGER COMPARTMENT

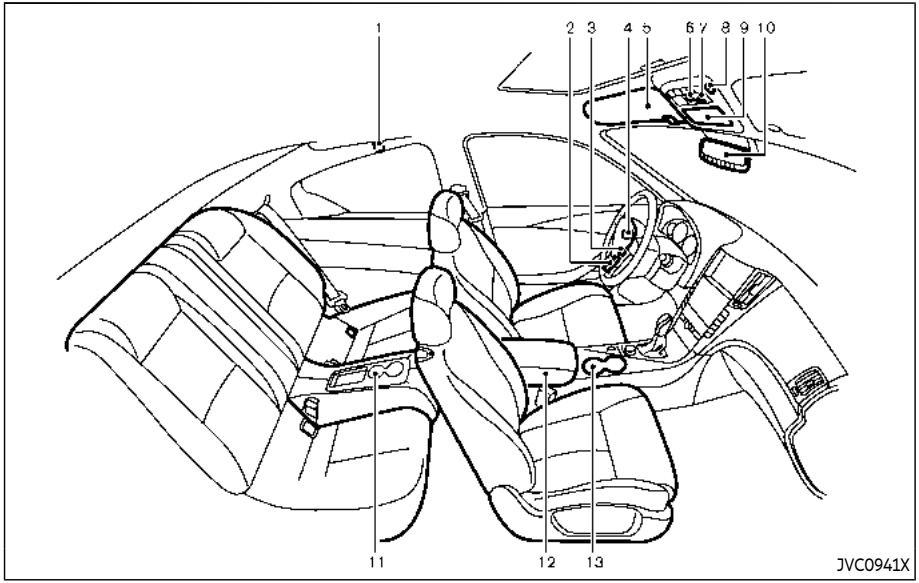

1. Coat hooks (P.2-51)
2. Power window switch (P.2-52)
3. Outside mirror remote control switch (P.3-31)
4. Automatic drive positioner switch (if so equipped) (P.3-33)
5. Sun visors (P.3-29)
6. Moonroof switch (if so equipped) (P.2-55)
7. SOS call switch* (if so equipped)
8. Map light (P.2-57)
9. Sunglasses holder (P.2-49)
10. Inside mirror (P.3-29)
    – HomeLink® universal transceiver (if so equipped) (P.2-59)
    – Compass (if so equipped) (P.2-9)
11. Rear cup holders (P.2-48)
12. Console box (P.2-50)
    – Power outlet (P.2-47)
    – USB (Universal Serial Bus) connection ports and AUX (auxiliary) input jack*
13. Front cup holders (P.2-48)

*: Refer to the INFINITI InTouch™ Owner's Manual.

COCKPIT

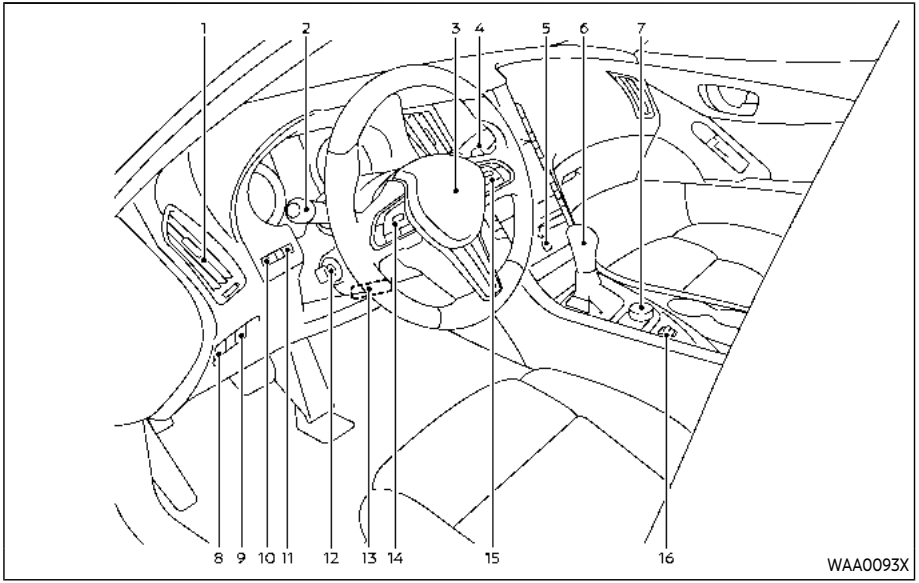

1. Side ventilator (P.4-34)
2. Headlight, fog light and turn signal switch (P.2-38)
3. Steering wheel
   – Horn (P.2-44)
   – Driver supplemental air bag (P.1-38)
   – Heated steering wheel (if so equipped) (P.2-47)
   – Power steering (P.5-124)
4. Windshield wiper and washer switch (P.2-34)
5. Hazard warning flasher switch (P.6-2)
6. Shift lever (P.5-16)
7. INFINITI controller*
8. Vehicle Dynamic Control (VDC) OFF switch (P.2-45, P.5-129)
9. Trunk lid release switch (P.3-23)
10. Instrument brightness control switch (P.2-43)
11. TRIP/RESET switch for twin trip odometer (P.2-7)
12. Electric tilting/telescopic steering wheel switch (if so equipped) (P.3-27)
13. Manual tilting/telescopic steering wheel lever (if so equipped) (P.3-27)
14. Steering-wheel-mounted controls (left side)
    – Audio control steering switch*
    – Hands-Free Phone System switch*
    – Voice recognition system switch*
15. Steering-wheel-mounted controls (right side)
    – Trip computer switches (P.2-29)
    – Cruise control switches (if so equipped) (P.5-66)
    – Intelligent Cruise Control (ICC) switches (if so equipped) (P.5-68)
    – Dynamic driver assistance switch (if so equipped) (P. 5-25, P.5-45, P.5-89)
16. INFINITI Drive Mode Selector (P.5-21)

*: Refer to the INFINITI InTouch™ Owner's Manual.

INSTRUMENT PANEL

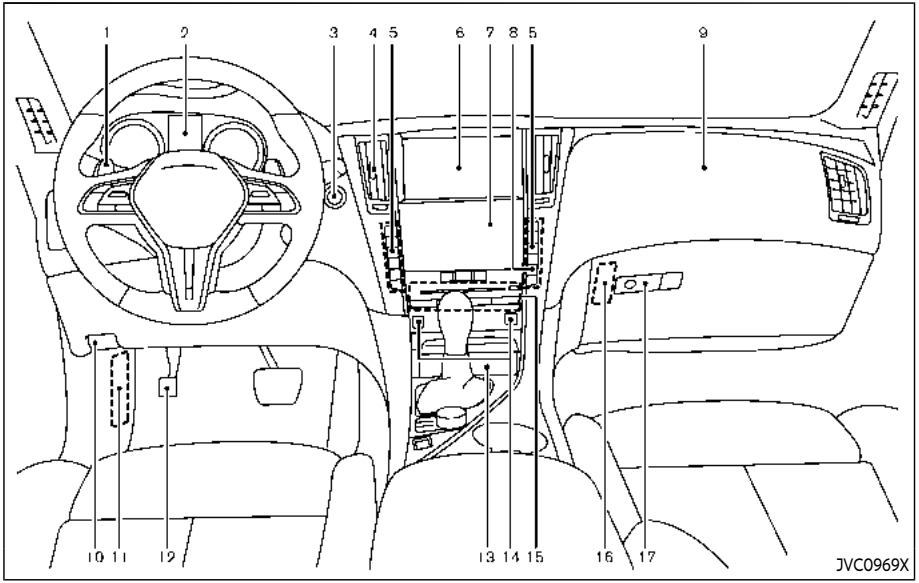

1. Paddle shifter (if so equipped) (P.5-18)
2. Meters and gauges (P.2-6)
   – Clock (P.2-31)
3. Push-button ignition switch (P.5-11)
4. Center ventilator (P.4-34)
5. Heater and air conditioner control (P.4-34)
6. Upper touch screen display* (upper display) and Navigation system* (if so equipped)
   – RearView Monitor (if so equipped) (P.4-3)
   – Around View® Monitor (if so equipped) (P.4-11)
7. Lower touch screen display* (lower display)
8. Rear window and outside mirror defroster switch (P.2-37)
9. Front passenger supplemental air bag (P.1-38)
10. Hood release handle (P.3-22)
11. Fuse box cover (P.8-17)
12. Parking brake (P.5-20)
13. Storage box (P.2-51) and power outlet (P.2-47)
14. Seat heater switch (if so equipped) (P.2-45)
15. Audio system*
16. Trunk release power cancel switch (P.3-24)
17. Glove box (P.2-50)

*: Refer to the INFINITI InTouch™ Owner's Manual.

METERS AND GAUGES

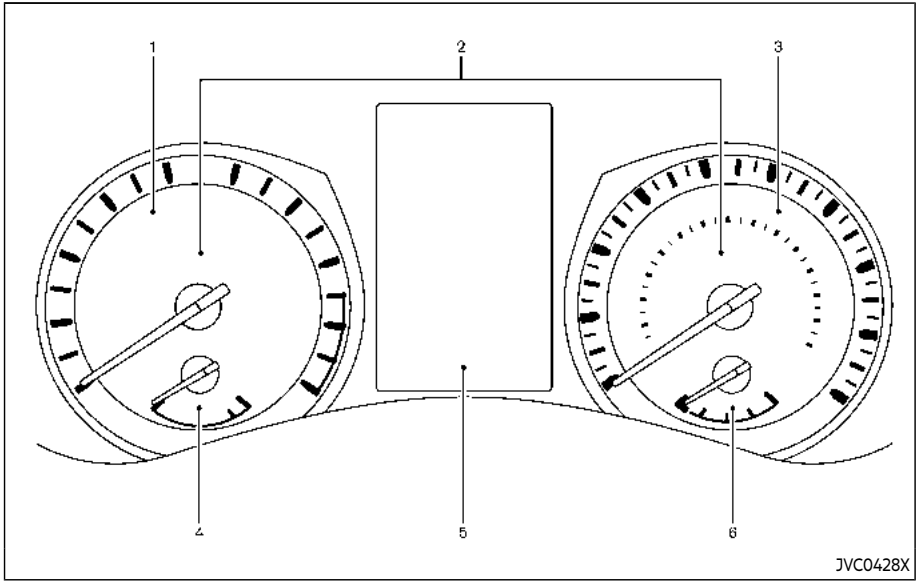

1. Tachometer (P.2-8)
2. Warning and indicator lights (P.2-12)
3. Speedometer (P.2-7)
4. Engine coolant temperature gauge (P.2-8)
5. Vehicle information display (P.2-20)/ Odometer/twin trip odometer (P.2-7)
6. Fuel gauge (P.2-9)

ENGINE COMPARTMENT

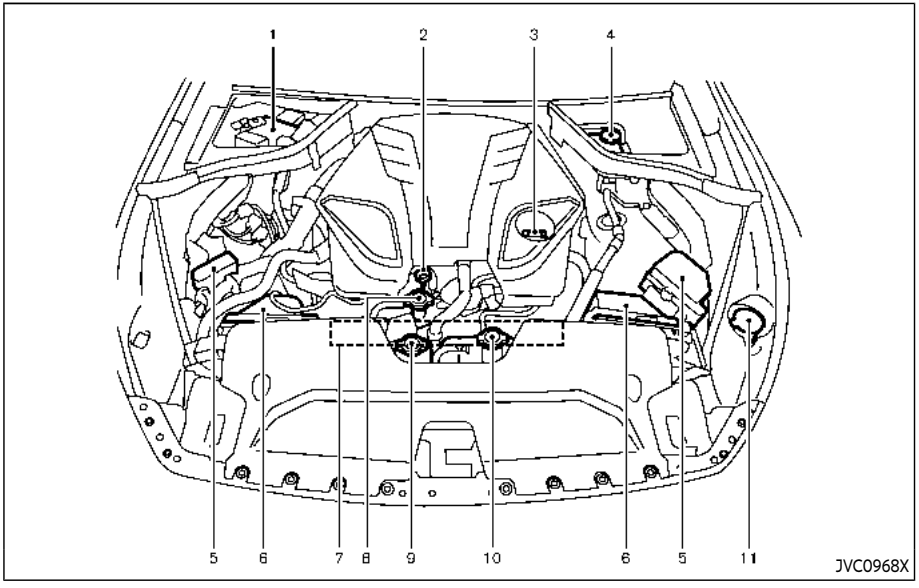

VR30DDTT ENGINE

1. Battery (P.8-11)
2. Engine oil dipstick (P.8-6)
3. Engine oil filler cap (P.8-7)
4. Brake fluid reservoir (P.8-9)
5. Fuse/fusible link holder (P.8-17)
6. Air cleaner (P.8-15)
7. Engine drive belt location (P.8-13)
8. Radiator filler cap (P.8-3)
9. Intercooler cooling reservoir (P.8-5)
10. Engine coolant reservoir (P.8-4)
11. Window washer fluid reservoir (P.8-10)

WARNING AND INDICATOR LIGHTS

Warning light	Name	Page
ABS	Anti-lock Braking System (ABS) warning light	2-12
BRAKE	Brake warning light	2-13
	Charge warning light	2-13
	Forward Emergency Braking (FEB) system warning light (if so equipped)	2-13
	Low fuel warning light	2-14
	Low tire pressure warning light	2-14
	Master warning light	2-16
	Power steering warning light	2-16
	Seat belt warning light	2-17
	Supplemental air bag warning light	2-17
	Vehicle Dynamic Control (VDC) warning light	2-17

Indicator light	Name	Page
ECO	ECO drive indicator light	2-18
	Exterior light indicator	2-18
	Front fog light indicator light	2-18
OFF	Front passenger air bag status light	2-18
	High beam assist indicator light (if so equipped)	2-18
	High beam indicator light	2-18
	Malfunction Indicator Light (MIL)	2-18
	Security indicator light	2-19
	Turn signal/hazard indicator lights	2-19
OFF	Vehicle Dynamic Control (VDC) off indicator light	2-19

MEMO

1 Safety — Seats, seat belts and supplemental restraint system

Seats 1-2
Front seats 1-3
Rear seats 1-6
Head restraints/headrests 1-7
Adjustable head restraint/headrest components 1-8
Non-adjustable head restraint/headrest components 1-9
Remove 1-9
Install 1-9
Adjust 1-10
Seat belts 1-11
Precautions on seat belt usage 1-11
Pregnant women 1-13
Injured persons 1-13
Pre-crash seat belts with comfort function (front seats) (if so equipped) 1-13
Three-point type seat belt 1-14
Seat belt extenders 1-16
Seat belt maintenance 1-17
Child safety 1-17
Infants 1-18
Small children 1-18
Larger children 1-18
Child restraints 1-19
Precautions on child restraints 1-19
Lower Anchors and Tethers for CHildren System (LATCH) 1-21
Rear-facing child restraint installation using LATCH 1-23
Rear-facing child restraint installation using the seat belts 1-25
Forward-facing child restraint installation using LATCH 1-28
Forward-facing child restraint installation using the seat belts 1-31
Booster seats 1-35
Supplemental restraint system 1-38
Precautions on supplemental restraint system 1-38
INFINITI Advanced Air Bag System (front seats) 1-44
Front seat-mounted side-impact supplemental air bag and roof-mounted curtain side-impact and rollover supplemental air bag systems 1-52
Seat belts with pretensioners (front seats) 1-54
Supplemental air bag warning labels 1-55
Supplemental air bag warning light 1-55
Repair and replacement procedure 1-56

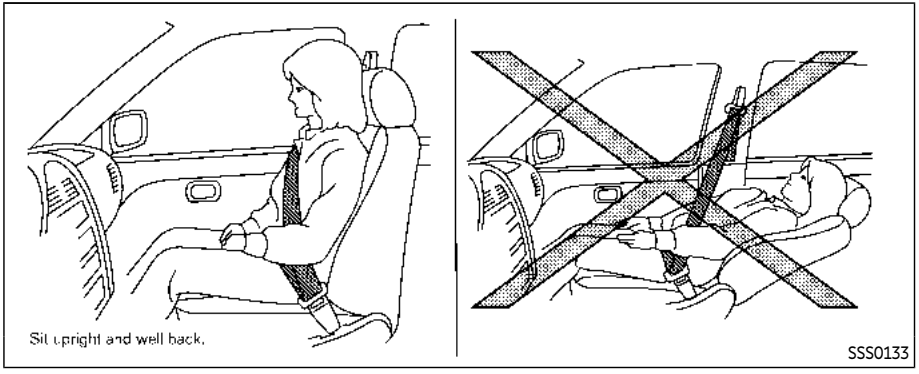

WARNING

- **Do not ride in a moving vehicle when the seatback is reclined. This can be dangerous. The shoulder belt will not be against your body. In an accident, you could be thrown into it and receive neck or other serious injuries. You could also slide under the lap belt and receive serious internal injuries.**
- **For the most effective protection when the vehicle is in motion, the seat should be upright. Always sit well back and upright in the seat with both feet on the floor and adjust the seat belt properly. See "Precautions on seat belt usage" (P.1-11).**
- **Do not leave children unattended inside the vehicle. They could unknowingly activate switches or controls. Unattended children could become involved in serious accidents.**
- **To help avoid risk of injury or death through unintended operation of the vehicle and/or its systems, do not leave children, people who require the assistance of others or pets unattended in your vehicle. Additionally, the temperature inside a closed vehicle on a warm day can quickly become high enough to cause a significant risk of injury or death to people and pets.**
- **The seatback should not be reclined further than necessary for comfort. Seat belts are most effective when the passenger sits well back and straight up in the seat. If the seatback is reclined, the risk of sliding under the lap belt and being injured is increased.**

CAUTION

When adjusting the seat positions, be sure not to contact any moving parts to avoid possible injuries and/or damages.

FRONT SEATS

Front power seat adjustment

Operating tips:

- The power seat motor has an auto-reset overload protection circuit. If the motor stops during operation, wait 30 seconds, then reactivate the switch.
- Do not operate the power seat switch for a long period of time when the engine is off. This will discharge the battery.

See "Automatic drive positioner" (P.3-33) for the seat position memory function.

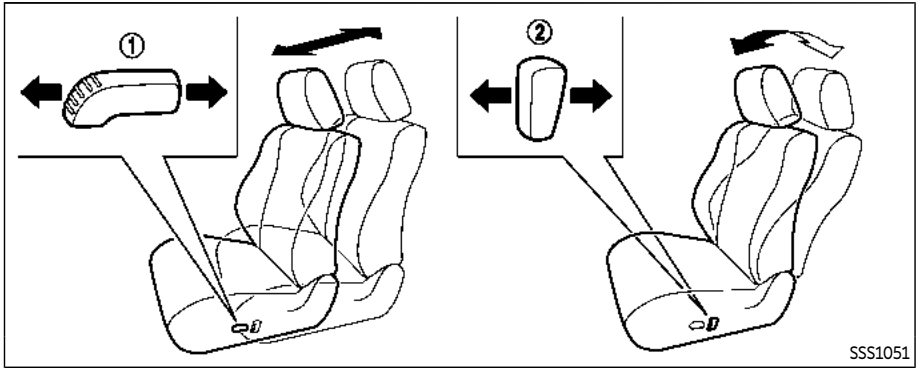

Forward and backward:

Moving the switch ① forward or backward will slide the seat forward or backward to the desired position.

Reclining:

Move the recline switch ② backward until the desired angle is obtained. To bring the seatback forward again, move the switch ② forward.

The reclining feature allows adjustment of the seatback for occupants of different sizes for added comfort and to help obtain proper seat belt fit. (See "Precautions on seat belt usage" (P.1-11).) Also, the seatback can be reclined to allow occupants to rest when the vehicle is parked.

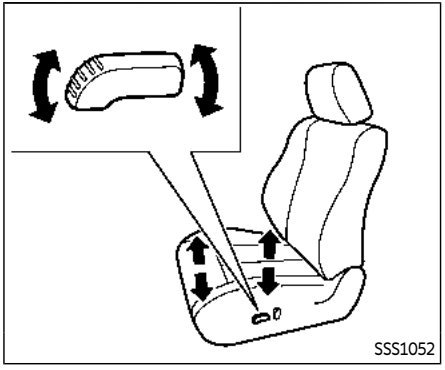

Seat lifter:

Push the front or rear end of the switch up or down to adjust the angle of the front portion or height of the seat.

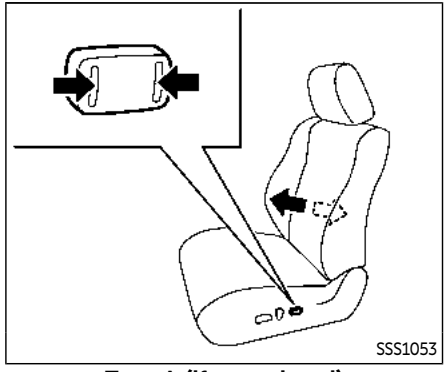

Type A (if so equipped)

Lumbar support (for driver's seat):

The lumbar support feature provides lower back support to the driver.

Type A (if so equipped)

Push the front or back end of the switch to adjust the seatback lumbar area.

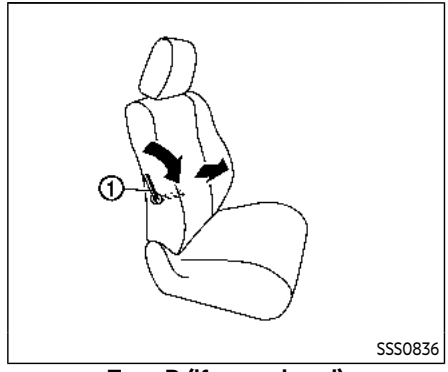

Type B (if so equipped)

Type B (if so equipped)

Move the lever ① up or down to adjust the seatback lumbar area.

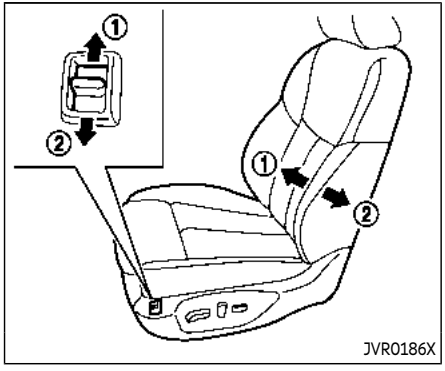

Side support (if so equipped):

The side support feature allows you to adjust the torso supports. Push the switch inside ① or outside ② to adjust the torso area.

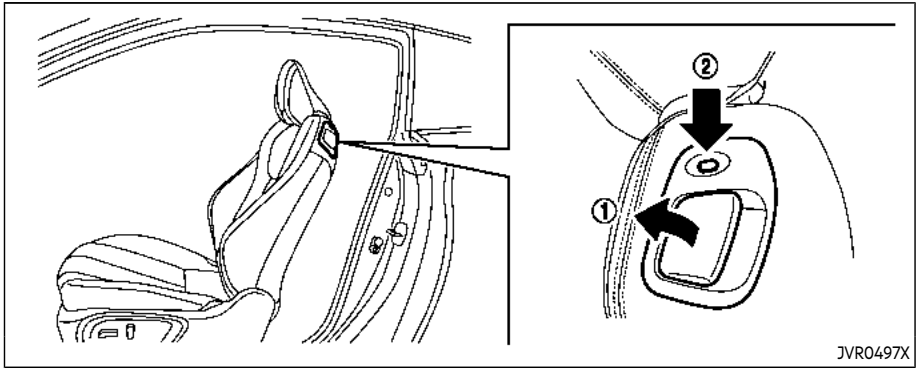

Walk-in mechanism:

This feature makes it easier to get in and out of the rear seat. Use the following procedure when getting in and out of the rear seat.

If the sun visor is used, close it to the original position before operating the walk-in feature.

1. Pull the seatback lever upward ① to fold the front seatback down. Make sure that the front seatback is completely folded down.
2. To slide the front seat forward, firmly push the seatback switch ②. The front seat will move forward.
3. Get in or out of the vehicle.
4. To return the front seat to its original position, raise the seatback and push the seatback switch ② again.

- To stop the seat sliding, push the seatback switch ② again or operate the seat sliding/lifter switches.
- The front passenger seat will stop returning 6.5 in (165.8 mm) from its frontmost position to retain space for the rear passenger.
- Depending on the seat position, the head restraint may contact the roof headlining during the walk-in operation. To prevent possible interference, lower the seat using the seat lifter switch.

WARNING

When returning the seat to its original position, confirm the seat and seatback are locked properly.

CAUTION

- **Be careful not to pinch your hand or foot or bump your head when operating the walk-in seat.**
- **While operating the walk-in seat, do not operate the seatback reclining switch. The reclining motor may be damaged.**
- **Do not place any objects near the seatback of the front seats. They may be pinched and damaged.**

The automatic forwarding and reversing will not work or stop under the following conditions:

- When the vehicle speed is moving (driver's seat only).
- When the seat belt is fastened.
- When the shift lever is not in the P (Park) position (driver's seat only).
- When the door is closed (automatic forwarding only).
- While the automatic drive positioner (if so equipped) operates.
- When the automatic drive positioner switches (if so equipped) are pushed.
- When the seatback switch is pushed.
- When the seat position is adjusted.

Note that the seat must be moved to the front-most position by operating the walk-in function after the battery is disconnected. Otherwise, the seat will not move backward during the walk-in function.

REAR SEATS

Folding

WARNING

- **Never allow anyone to ride in the trunk or on the rear seat when it is in the fold-down position. Use of these areas by passengers without proper restraints could result in serious injury in an accident or sudden stop.**
- **Properly secure all cargo with ropes or straps to help prevent it from sliding or shifting. Do not place cargo higher than the seatback. In a sudden stop or collision, unsecured cargo could cause personal injury.**
- **When returning the seatback to the upright position, be certain they are completely secured in the latched position. If they are not completely secured, passengers may be injured in an accident or sudden stop.**
- **Closely supervise children when they are around cars to prevent them from playing and becoming locked in the trunk where they could be seriously injured. Keep the car locked, with the rear seatback and trunk lid securely latched when not in use, and prevent children's access to car keys.**

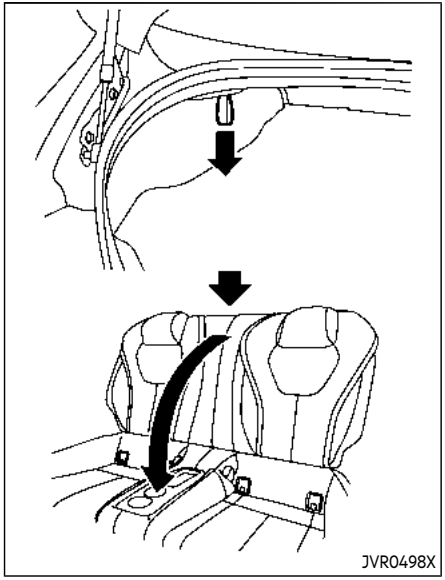

The rear seatback can be folded according to the following procedure.

Before folding the seatback:

Remove drink containers from the rear cup holder.

To fold the seatback:

1. Open the trunk lid.
2. Pull the strap located on the left side of the trunk. The rear seatback will be unlatched.
3. Fold the rear seatback down.

To return the seatback:

1. Fold up the rear seatback.
2. Securely lock the seatback in position.

⚠ WARNING

Head restraint/headrest supplement the other vehicle safety systems. They may provide additional protection against injury in certain rear end collisions. Adjustable head restraint/headrest must be adjusted properly, as specified in this section. Check the adjustment after someone else uses the seat. Do not attach anything to the head restraint/headrest stalks or remove the head restraint/headrest. Do not use the seat if the head restraint/headrest has been removed. If the head restraint/headrest was removed, reinstall and properly adjust the head restraint/headrest before an occupant uses the seating position. Failure to follow these instructions can reduce the effectiveness of the head restraint/headrest. This may increase the risk of serious injury or death in a collision.

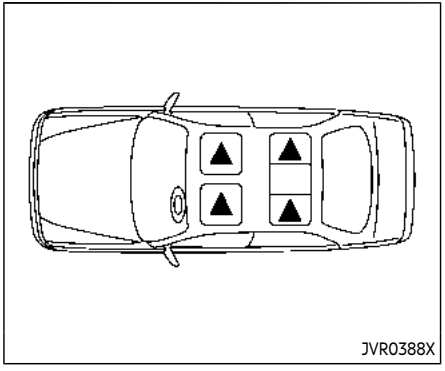

The illustration shows the seating positions equipped with head restraint/headrest.

▲ Indicates the seating position is equipped with a head restraint.

■ Indicates the seating position is equipped with a headrest.

+ Indicates the seating position is not equipped with a head restraint or headrest.

- Your vehicle is equipped with a head restraint/headrest that may be integrated, adjustable or non-adjustable.
- Adjustable head restraints/headrests have multiple notches along the stalk to lock them in a desired adjustment position.
- The non-adjustable head restraints/headrests have a single locking notch to secure them to the seat frame.
- Proper Adjustment:
  - For the adjustable type, align the head restraint/headrest so the center of your ear is approximately level with the center of the head restraint/headrest.
  - If your ear position is still higher than the recommended alignment, place the head restraint/headrest at the highest position.
- If the head restraint/headrest has been removed, ensure that it is reinstalled and locked in place before riding in that designated seating position.

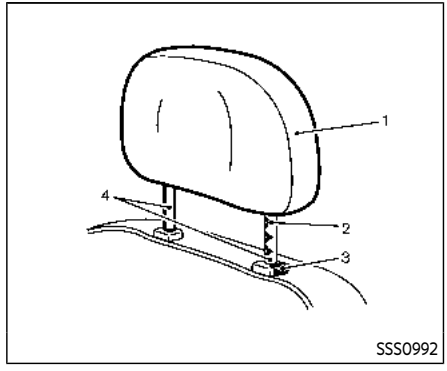

ADJUSTABLE HEAD RESTRAINT/ HEADREST COMPONENTS

1. Removable head restraint/headrest
2. Multiple notches
3. Lock knob
4. Stalks

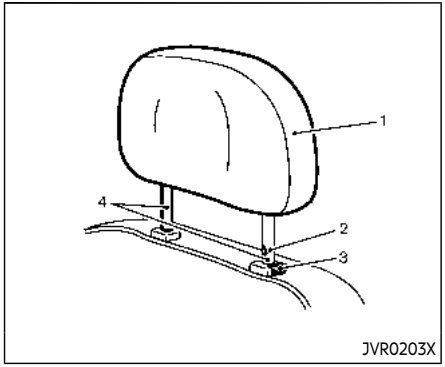

NON-ADJUSTABLE HEAD RESTRAINT/HEADREST COMPONENTS

1. Removable head restraint/headrest
2. Single notch
3. Lock knob
4. Stalks

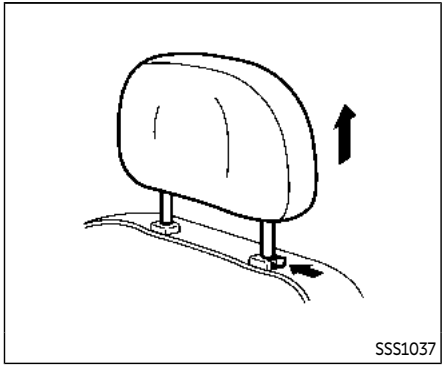

REMOVE

Use the following procedure to remove the head restraint/headrest.

1. Pull the head restraint/headrest up to the highest position.
2. Push and hold the lock knob.
3. Remove the head restraint/headrest from the seat.
4. Store the head restraint/headrest properly in a secure place so it is not loose in the vehicle.
5. Reinstall and properly adjust the head restraint/headrest before an occupant uses the seating position.

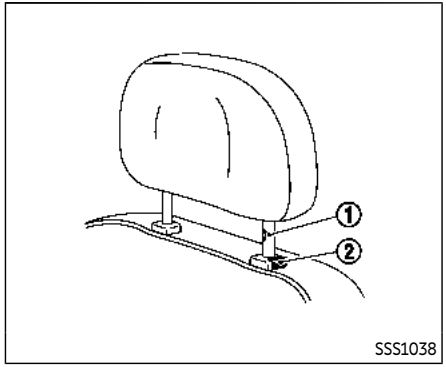

INSTALL

1. Align the head restraint/headrest stalks with the holes in the seat. Make sure that the head restraint/headrest is facing the correct direction. The stalk with the adjustment notch ① must be installed in the hole with the lock knob ②.
2. Push and hold the lock knob and push the head restraint/headrest down.
3. Properly adjust the head restraint/headrest before an occupant uses the seating position.

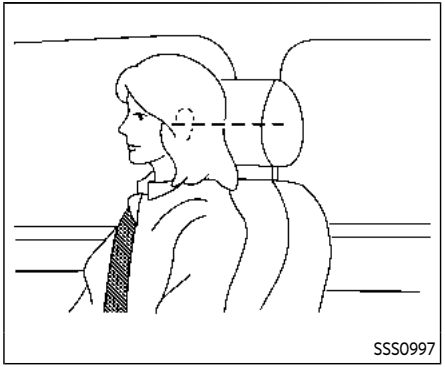

ADJUST

Adjust the head restraint/headrest so the center is level with the center of your ears. If your ear position is still higher than the recommended alignment, place the head restraint/headrest at the highest position.

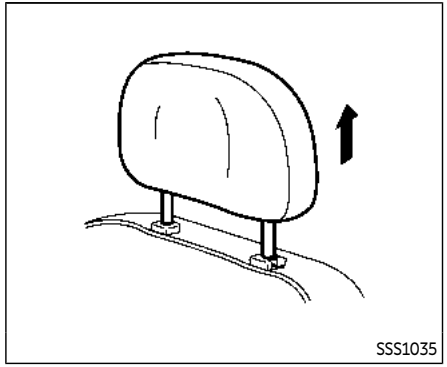

Raise

To raise the head restraint/headrest, pull it up.

Make sure the head restraint/headrest is positioned so the lock knob is engaged in the notch before riding in that designated seating position.

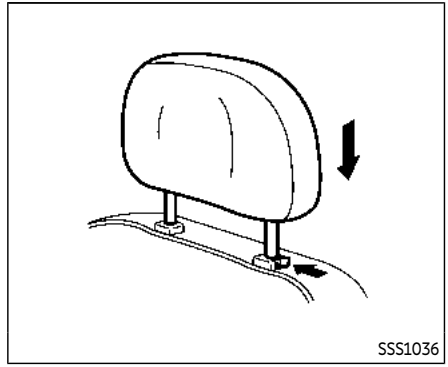

Lower

To lower, push and hold the lock knob and push the head restraint/headrest down.

Make sure the head restraint/headrest is positioned so the lock knob is engaged in the notch before riding in that designated seating position.

PRECAUTIONS ON SEAT BELT USAGE

If you are wearing your seat belt properly adjusted, and you are sitting upright and well back in your seat with both feet on the floor, your chances of being injured or killed in an accident and/or the severity of injury may be greatly reduced. INFINITI strongly encourages you and all of your passengers to buckle up every time you drive, even if your seating position includes a supplemental air bag.

Most U.S. states and Canadian provinces or territories specify that seat belts be worn at all times when a vehicle is being driven.

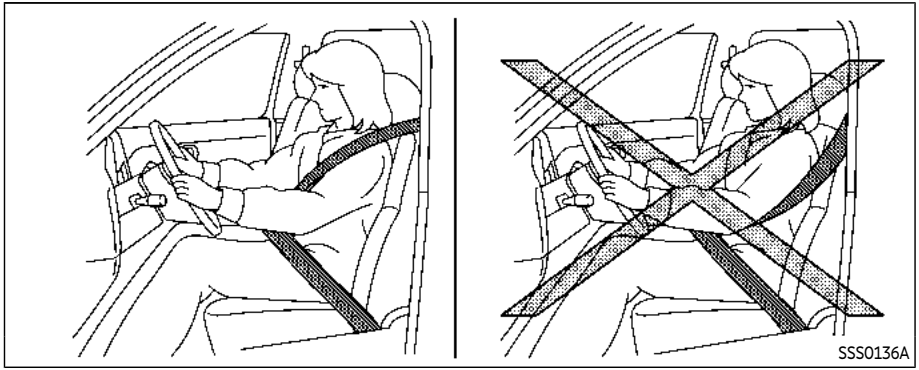

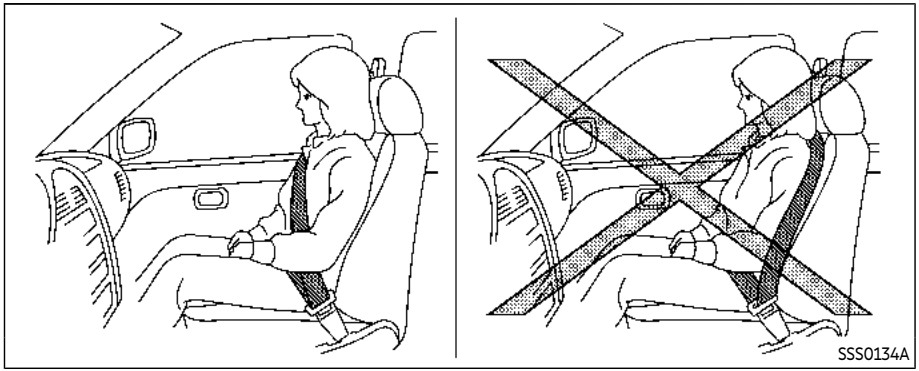

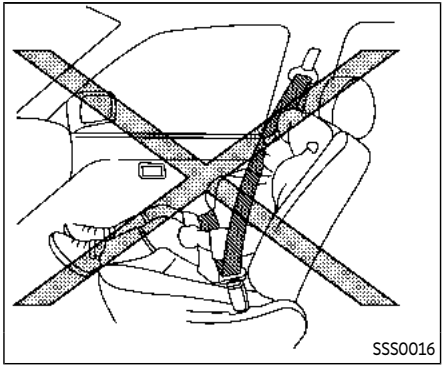

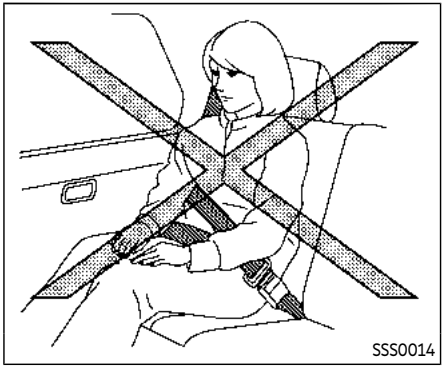

WARNING

- **Every person who drives or rides in this vehicle should use a seat belt at all times. Children should be properly restrained in the rear seat and, if appropriate, in a child restraint.**
- **The seat belt should be properly adjusted to a snug fit. Failure to do so may reduce the effectiveness of the entire restraint system and increase the chance or severity of injury in an accident. Serious injury or death can occur if the seat belt is not worn properly.**
- **Always route the shoulder belt over your shoulder and across your chest. Never run the belt behind your back, under your arm or across your neck. The belt should be away from your face and neck, but not falling off your shoulder.**
- **Position the lap belt as low and snug as possible AROUND THE HIPS, NOT THE WAIST. A lap belt worn too high could increase the risk of internal injuries in an accident.**
- **Be sure the seat belt tongue is securely fastened to the proper buckle.**
- **Do not wear the seat belt inside out or twisted. Doing so may reduce its effectiveness.**
- **Do not allow more than one person to use the same seat belt.**
- **Never carry more people in the vehicle than there are seat belts.**
- **If the seat belt warning light glows continuously while the ignition is turned ON with all doors closed and all seat belts fastened, it may indicate a malfunction in the system. Have the system checked. It is recommended you visit an INFINITI retailer for this service.**
- **No changes should be made to the seat belt system. For example, do not modify the seat belt, add material or install devices that may change the seat belt routing or tension. Doing so may affect the operation of the seat belt system. Modifying or tampering with the seat belt system may result in serious personal injury.**
- **Once a seat belt pretensioner has activated, it cannot be reused and must be replaced together with the retractor. It is recommended you visit an INFINITI retailer for this service.**

- **All seat belt assemblies, including retractors and attaching hardware, should be inspected after any collision. It is recommended you visit an INFINITI retailer for this service. INFINITI recommends that all seat belt assemblies in use during a collision be replaced unless the collision was minor and the belts show no damage and continue to operate properly. Seat belt assemblies not in use during a collision should also be inspected and replaced if either damage or improper operation is noted.**
- **All child restraints and attaching hardware should be inspected after any collision. Always follow the restraint manufacturer's inspection instructions and replacement recommendations. The child restraints should be replaced if they are damaged.**

PREGNANT WOMEN

INFINITI recommends that pregnant women use seat belts. The seat belt should be worn snug, and always position the lap belt as low as possible around the hips, not the waist, and place the shoulder belt over your shoulder and across your chest. Never run the lap/shoulder belt over your abdominal area. Contact your doctor for specific recommendations.

INJURED PERSONS

INFINITI recommends that injured persons use seat belts, depending on the injury. Check with your doctor for specific recommendations.

PRE-CRASH SEAT BELTS WITH COMFORT FUNCTION (front seats) (if so equipped)

The pre-crash seat belt tightens the seat belt with a motor to help restrain front seat occupants. This helps reduce the risk of injury in a collision.

The motor retracts the seat belt under the following emergency conditions:

- During emergency braking.
- During sudden steering maneuvers.
- Activation of the Forward Emergency Braking (FEB) with pedestrian detection system. (See "Forward Emergency Braking (FEB) with pedestrian detection system" (P.5-100).)

The pre-crash seat belt will not be active when:

- The seat belt is not fastened.
- The vehicle speed is under 10 MPH (15 km/h) during emergency braking.
- The vehicle speed is under 19 MPH (30 km/h) during sudden steering maneuvers.

The pre-crash seat belt will not be active when the brake pedal is not depressed except when sudden steering maneuvers occur or the FEB with pedestrian detection system activates.

The motor also retracts the seat belt when the seat belt is fastened or unfastened. When the seat belt is fastened, the motor tightens the seat belt for a snug fit. When the seat belt is unfastened, the motor retracts the seat belt. If the seat belt is not fully retracted, the motor retracts the seat belt when the door is opened.

Always wear your seat belt correctly and sit upright and well back.

If the motor cannot retract the seat belt when the seat belt is fastened or unfastened, it may indicate the pre-crash seat belt system has a malfunction. It is recommended you have an INFINITI retailer check and repair the system.

When the seat belt is retracted repeatedly in a short period of time, the motor may not be able to retract the seat belt. After a few minutes, the motor normally reactivates and retracts the seat belt. If the seat belt still cannot be retracted by the motor, the pre-crash seat belt system has a malfunction.

Have the system checked and repaired. It is recommended you visit an INFINITI retailer for this service.

THREE-POINT TYPE SEAT BELT

WARNING

- **Every person who drives or rides in this vehicle should use a seat belt at all times.**
- **Do not ride in a moving vehicle when the seatback is reclined. This can be dangerous. The shoulder belt will not be against your body. In an accident, you could be thrown into it and receive neck or other serious injuries. You could also slide under the lap belt and receive serious internal injuries.**
- **For the most effective protection when the vehicle is in motion, the seat should be upright. Always sit well back and upright in the seat with both feet on the floor and adjust the seat belt properly.**

WARNING

Do not allow children to play with the seat belts. Most seating positions are equipped with Automatic Locking Retractor (ALR) mode seat belts. If the seat belt becomes wrapped around a child's neck with the ALR mode activated, the child can be seriously injured or killed if the seat belt retracts and becomes tight. This can occur even if the vehicle is parked. Unbuckle the seat belt to release the child.

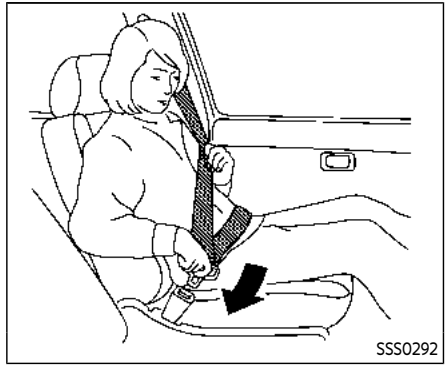

Fastening the seat belts

1. Adjust the seat. (See “Seats” (P.1-2).)
2. Slowly pull the seat belt out of the retractor and insert the tongue into the buckle until you hear and feel the latch engage.
   - **The retractor is designed to lock during a sudden stop or on impact. A slow pulling motion permits the belt to move, and allows you some freedom of movement in the seat.**
   - **If the seat belt cannot be pulled from its fully retracted position, firmly pull the belt and release it. Then smoothly pull the belt out of the retractor.**

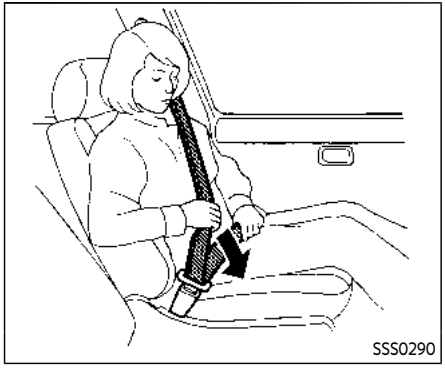

3. Position the lap belt portion **low and snug on the hips** as shown.
4. Pull the shoulder belt portion toward the retractor to take up extra slack. Be sure the shoulder belt is routed over your shoulder and across your chest.

The three-point type seat belts have two modes of operation:

- Emergency Locking Retractor (ELR)
- Automatic Locking Retractor (ALR)

The Emergency Locking Retractor (ELR) mode allows the seat belt to extend and retract to allow the driver and passengers some freedom of movement in the seat. The ELR locks the seat belt when the vehicle slows down rapidly or during impacts.

The Automatic Locking Retractor (ALR) mode (child restraint mode) locks the seat belt for child restraint installation.

When the ALR mode is activated the seat belt cannot be extended again until the seat belt tongue is detached from the buckle and fully retracted. The seat belt returns to the ELR mode after the seat belt fully retracts. For additional information, see "Child restraints" (P.1-19).

The ALR mode should be used only for child restraint installation. During normal seat belt use by an occupant, the ALR mode should not be activated. If it is activated, it may cause uncomfortable seat belt tension.

WARNING

When fastening the seat belts, be certain that seatbacks are completely secured in the latched position. If they are not completely secured, passengers may be injured in an accident or sudden stop.

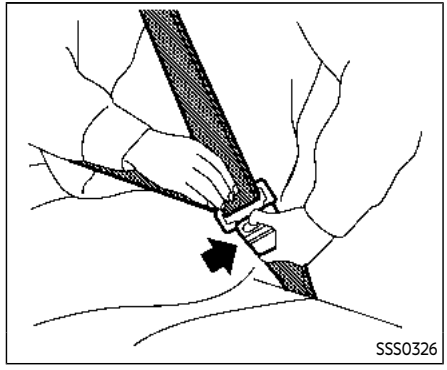

Unfastening the seat belts

To unfasten the seat belt, push the button on the buckle. The seat belt automatically retracts.

Checking seat belt operation

Seat belt retractors are designed to lock seat belt movement by two separate methods:

- When the belt is pulled quickly from the retractor.
- When the vehicle slows down rapidly.

To increase your confidence in the seat belts, check the operation as follows:

- Grasp the shoulder belt and pull forward quickly. The retractor should lock and

restrict further belt movement.

If the retractor does not lock during this check, get the system checked. It is recommended you visit an INFINITI retailer for this service, or to learn more about seat belt operation.

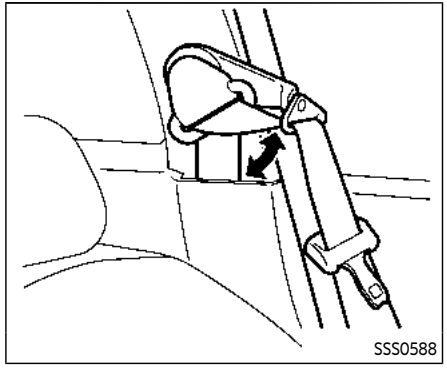

Shoulder belt arm (for front seats)

Before fastening the seat belt, pull the shoulder belt arm forward until it clicks at the lock position. The arm can also be folded down for easier access for rear seat passengers.

Pulling the arm forward will allow an easy access to the belt.

SEAT BELT EXTENDERS

If, because of body size or driving position, it is not possible to properly fit the lap-shoulder belt and fasten it, an extender that is compatible with the installed seat belts is available that can be purchased. The extender adds approximately 8 in (200 mm) of length and may be used for either the driver or front passenger seating position. It is recommended you visit an INFINITI retailer for assistance with purchasing an extender if an extender is required.

WARNING

- **It is recommended only INFINITI seat belt extenders, made by the same company which made the original equipment seat belts, be used with the INFINITI seat belts.**
- **Adults and children who can use the standard seat belt should not use an extender. Such unnecessary use could result in serious personal injury in the event of an accident.**
- **Never use seat belt extenders to install child restraints. If the child restraint is not secured properly, the child could be seriously injured or killed in a collision or a sudden stop.**

SEAT BELT MAINTENANCE

- **To clean the seat belt webbing,** apply a mild soap solution or any solution recommended for cleaning upholstery or carpets. Then, wipe with a cloth and allow the seat belts to dry in the shade. Do not allow the seat belts to retract until they are completely dry.
- **If dirt builds up in the shoulder belt guide** of the seat belt anchors, the seat belts may retract slowly. Wipe the shoulder belt guide with a clean, dry cloth.
- **Periodically check to see that the seat belt and the metal components** such as buckles, tongues, retractors, flexible wires and anchors work properly. If loose parts, deterioration, cuts or other damage on the webbing is found, the entire seat belt assembly should be replaced.

WARNING

Do not allow children to play with the seat belts. Most seating positions are equipped with Automatic Locking Retractor (ALR) mode seat belts. If the seat belt becomes wrapped around a child's neck with the ALR mode activated, the child can be seriously injured or killed if the seat belt retracts and becomes tight. This can occur even if the vehicle is parked. Unbuckle the seat belt to release the child.

Children need adults to help protect them.

They need to be properly restrained.

In addition to the general information in this manual, child safety information is available from many other sources, including doctors, teachers, government traffic safety offices, and community organizations. Every child is different, so be sure to learn the best way to transport your child.

There are three basic types of child restraint systems:

- Rear-facing child restraint
- Forward-facing child restraint
- Booster seat

The proper restraint depends on the child's size. Generally, infants up to about 1 year and less than 20 lbs (9 kg) should be placed in rear-facing child restraints. Forward-facing child restraints are available for children who outgrow rear-facing child restraints and are at least 1 year old. Booster seats are used to help position a vehicle lap/shoulder belt on a child who can no longer use a forward-facing child restraint.

WARNING

Infants and children need special protection. The vehicle's seat belts may not fit them properly. The shoulder belt may come too close to the face or neck. The lap belt may not fit over their small hip bones. In an accident, an improperly fitting seat belt could cause serious or fatal injury. Always use appropriate child restraints.

All U.S. states and Canadian provinces or territories require the use of approved child restraints for infants and small children. See "Child restraints" (P.1-19).

A child restraint may be secured in the vehicle by using either the LATCH (Lower Anchor and Tethers for CHildren) system or with the vehicle seat belt. See "Child restraints" (P.1-19) for more information.

INFINITI recommends that all pre-teens and children be restrained in the rear seat. Studies show that children are safer when properly restrained in the rear seat than in the front seat.

This is especially important because your vehicle has a supplemental restraint system (Air bag system) for the front passenger. See "Supplemental restraint system" (P.1-38).

INFANTS

Infants up to at least 1 year old should be placed in a rear-facing child restraint. INFINITI recommends that infants be placed in child restraints that comply with Federal Motor Vehicle Safety Standards or Canadian Motor Vehicle Safety Standards. You should choose a child restraint that fits your vehicle and always follow the manufacturer's instructions for installation and use.

SMALL CHILDREN

Children that are over 1 year old and weigh at least 20 lbs (9 kg) should remain in a rear-facing child restraint as long as possible up to the height or weight limit of the child restraint. Children who outgrow the height or weight limit of the rear-facing child restraint and are at least 1 year old should be secured in a forward-facing child restraint with a harness. Refer to the manufacturer's instructions for minimum and maximum weight and height recommendations. INFINITI recommends that small children be placed in child restraints that comply with Federal Motor Vehicle Safety Standards or Canadian Motor Vehicle Safety Standards. You should choose a child restraint that fits your vehicle and always follow the manufacturer's instructions for installation and use.

LARGER CHILDREN

Children should remain in a forward-facing child restraint with a harness until they reach the maximum height or weight limit allowed by the child restraint manufacturer.

Once a child outgrows the height or weight limit of the harness-equipped forward-facing child restraint, INFINITI recommends that the child be placed in a commercially available booster seat to obtain proper seat belt fit. For a seat belt to fit properly, the booster seat should raise the child so that the shoulder belt is properly positioned across the chest and the top, middle portion of the shoulder. The shoulder belt should not cross the neck or face and should not fall off the shoulder. The lap belt should lie snugly across the lower hips or upper thighs, not the abdomen.

A booster seat can only be used in seating positions that have a three-point type seat belt. The booster seat should fit the vehicle seat and have a label certifying that it complies with Federal Motor Vehicle Safety Standards or Canadian Motor Vehicle Safety Standards.

A booster seat should be used until the child can pass the seat belt fit test below:

- Are the child's back and hips against the vehicle seatback?
- Is the child able to sit without slouching?
- Do the child's knees bend easily over the front edge of the seat with feet flat on the floor?
- Can the child safely wear the seat belt (lap belt low and snug across the hips and shoulder belt across mid-chest and shoulder)?
- Is the child able to use the properly adjusted head restraint/headrest?
- Will the child be able to stay in position for the entire ride?

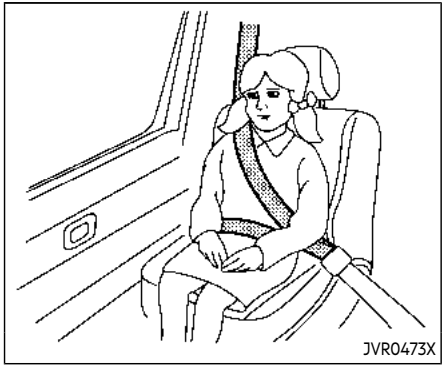

If you answered no to any of these questions, the child should remain in a booster seat using a three-point type seat belt.

NOTE:

Laws in some communities may follow different guidelines. Check local and state regulations to confirm your child is using the correct restraint system before traveling.

WARNING

Never let a child stand or kneel on any seat and do not allow a child in the cargo area. The child could be seriously injured or killed in a sudden stop or collision.

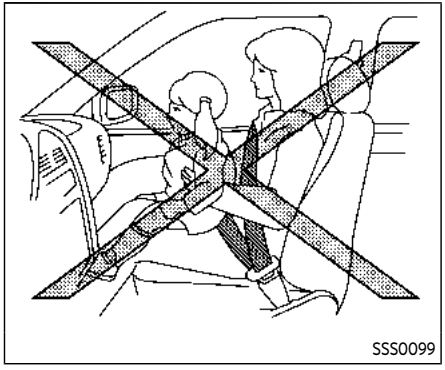

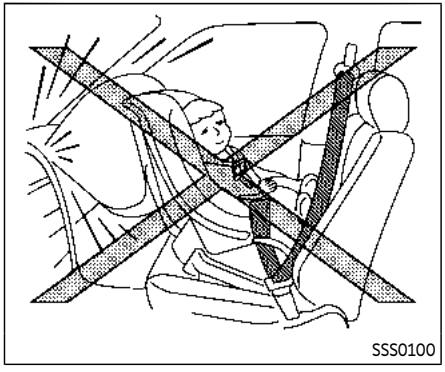

PRECAUTIONS ON CHILD RESTRAINTS

WARNING

- **Failure to follow the warnings and instructions for proper use and installation of child restraints could result in serious injury or death of a child or other passengers in a sudden stop or collision:**
  - **The child restraint must be used and installed properly. Always follow all of the child restraint manufacturer's instructions for installation and use.**
  - **Infants and children should never be held on anyone's lap. Even the strongest adult cannot resist the forces of a collision.**
  - **Do not put a seat belt around both a child and another passenger.**
  - **INFINITI recommends that all child restraints be installed in the rear seat. Studies show that children are safer when properly restrained in the rear seat than in the front seat. If you must install a**

forward-facing child restraint in the front seat, see "Forward-facing child restraint installation using the seat belts" (P.1-31).

– Even with the INFINITI Advanced Air Bag System, never install a rear-facing child restraint in the front seat. An inflating air bag could seriously injure or kill a child. A rear-facing child restraint must only be used in the rear seat.

– Be sure to purchase a child restraint that will fit the child and vehicle. Some child restraints may not fit properly in your vehicle.

– Child restraint anchor points are designed to withstand loads from child restraints that are properly fitted.

– Never use the anchor points for adult seat belts or harnesses.

– A child restraint with a top tether strap should not be used in the front passenger seat.

– Keep seatbacks as upright as possible after fitting the child restraint.

– Infants and children should always be placed in an appropriate child restraint while in the vehicle.

- **When the child restraint is not in use, keep it secured with the LATCH system or a seat belt. In a sudden stop or collision, loose objects can injure occupants or damage the vehicle.**

CAUTION

A child restraint in a closed vehicle can become very hot. Check the seating surface and buckles before placing a child in the child restraint.

This vehicle is equipped with a universal child restraint anchor system, referred to as the LATCH (Lower Anchors and Tethers for CHildren) system. Some child restraints include rigid or webbing-mounted attachments that can be connected to these anchors.

For details, see "Lower Anchors and Tethers for CHildren System (LATCH)" (P.1-21).

If you do not have a LATCH compatible child restraint, the vehicle seat belts can be used.

Several manufacturers offer child restraints for infants and small children of various sizes. When selecting any child restraint, keep the following points in mind:

- Choose only a restraint with a label certifying that it complies with Federal Motor Vehicle Safety Standard 213 or Canadian Motor Vehicle Safety Standard 213.
- Check the child restraint in your vehicle to be sure it is compatible with the vehicle's seat and seat belt system.
- If the child restraint is compatible with your vehicle, place your child in the child restraint and check the various adjustments to be sure the child restraint is compatible with your child. Choose a child restraint that is designed for your child's height and weight. Always follow all recommended procedures.
- If the combined weight of the child and child restraint is less than 65 lbs (29.5 kg), you may use either the LATCH anchors or the seat belt to install the child restraint (not both at the same time).
- If the combined weight of the child and child restraint is greater than 65 lbs (29.5 kg), use the vehicle's seat belt (not the lower anchors) to install the child restraint.
- Be sure to follow the child restraint manufacturer's instructions for installation.

All U.S. states and Canadian provinces or territories require that infants and small children be restrained in an approved child restraint at all times while the vehicle is being operated. Canadian law requires the top tether strap on forward-facing child restraints be secured to the designated anchor point on the vehicle.

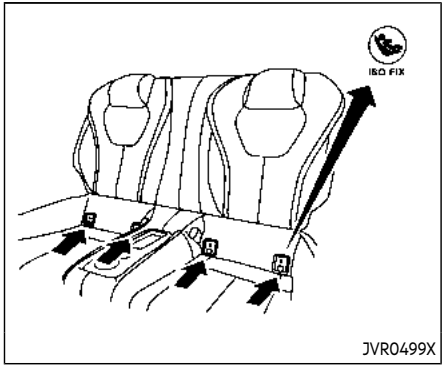

Lower Anchors and Tethers for CHildren System (LATCH)

Your vehicle is equipped with special anchor points that are used with the LATCH (Lower Anchors and Tethers for CHildren) system compatible child restraints. This system may also be referred to as the ISOFIX or ISOFIX compatible system. With this system, you do not have to use a vehicle seat belt to secure the child restraint unless the combined weight of the child and child restraint exceeds 65 lbs (29.5 kg). If the combined weight of the child and child restraint is greater than 65 lbs (29.5 kg), use the vehicle's seat belt (not the lower anchors) to install the child restraint. Be sure to follow the child restraint manufacturer's instructions for installation.

LATCH lower anchor

WARNING

Failure to follow the warnings and instructions for proper use and installation of child restraints could result in serious injury or death of a child or other passengers in a sudden stop or collision:

- **Attach LATCH system compatible child restraints only at the locations shown in the illustration.**
- **Do not secure a child restraint in the rear center position using the LATCH lower anchors. The child restraint will not be secured properly.**
- **Inspect the lower anchors by inserting your fingers into the lower anchor area. Feel to make sure there are no obstructions over the anchors such as seat belt webbing or seat cushion material. The child restraint will not be secured properly if the lower anchors are obstructed.**

Child restraint anchorages are designed to withstand only those loads imposed by correctly fitted child restraints. Under

no circumstances are they to be used to attach adult seat belts, or other items or equipment to the vehicle. Doing so could damage the child restraint anchorages. The child restraint will not be properly installed using the damaged anchorage, and a child could be seriously injured or killed in a collision.

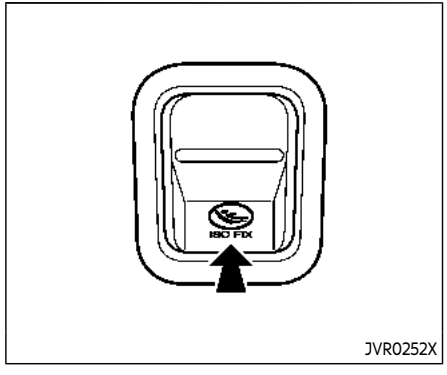

LATCH lower anchor location

The LATCH lower anchors are located, under the covers labelled ISO FIX, at the bottom of the rear seat cushions.

To access a LATCH lower anchor, insert your finger into the cover and pull the cover off.

CAUTION

Store the loose LATCH lower anchor covers to avoid losing them and where they will not get damaged.

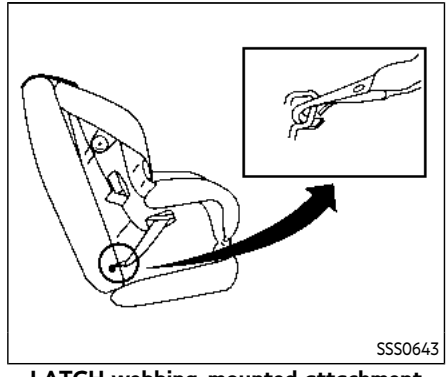

LATCH webbing-mounted attachment

Installing child restraint LATCH lower anchor attachments

LATCH compatible child restraints include two rigid or webbing-mounted attachments that can be connected to two anchors located at certain seating positions in your vehicle. With this system, you do not have to use a vehicle seat belt to secure the child restraint. Check your child restraint for a label stating that it is compatible with LATCH. This information may also be in the instructions provided by the child restraint manufacturer.

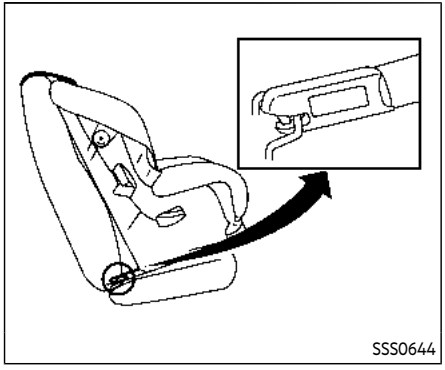

LATCH rigid-mounted attachment

When installing a child restraint, carefully read and follow the instructions in this manual and those supplied with the child restraint.

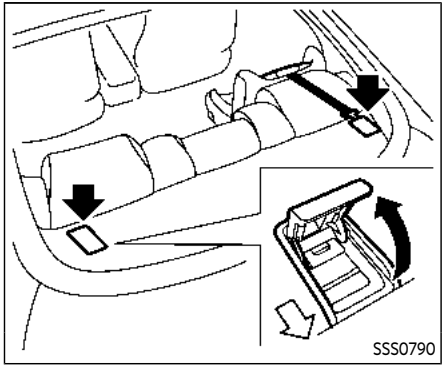

Top tether anchor point locations

Anchor points are located on the rear parcel shelf.

If you have any questions when installing a top tether strap child restraint on the rear seat, it is recommended you visit an INFINITI retailer for this service.

WARNING

Child restraint anchorages are designed to withstand only those loads imposed by correctly fitted child restraints. Under no circumstances are they to be used to attach adult seat belts, or other items or equipment to the vehicle. Doing so could damage the child restraint anchorages. The child restraint will not be properly installed using the damaged anchorage, and a child could be seriously injured or killed in a collision.

REAR-FACING CHILD RESTRAINT INSTALLATION USING LATCH

Refer to all Warnings and Cautions in the “Child safety” and “Child restraints” sections before installing a child restraint.

Do not use the lower anchors if the combined weight of the child and the child restraint exceeds 65 lbs (29.5 kg). If the combined weight of the child and the child restraint is greater than 65 lbs (29.5 kg), use the vehicle’s seat belt (not the lower anchors) to install the child restraint. Be sure to follow the child restraint manufacturer’s instructions for installation.

Follow these steps to install a rear-facing child restraint using the LATCH system:

1. Position the child restraint on the seat. Always follow the child restraint manufacturer’s instructions.

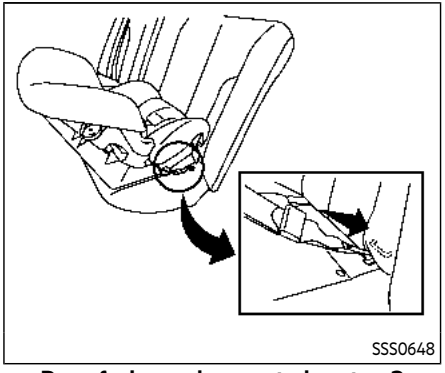

Rear-facing web-mounted — step 2

2. Secure the child restraint anchor attachments to the LATCH lower anchors. Check to make sure the LATCH attachment is properly attached to the lower anchors.

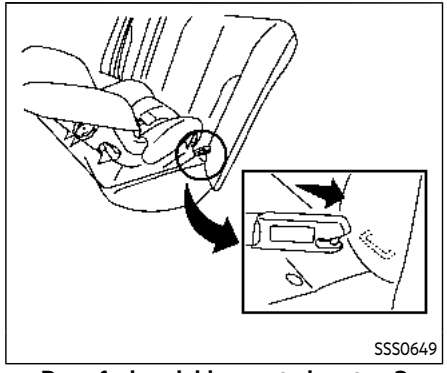

Rear-facing rigid-mounted — step 2

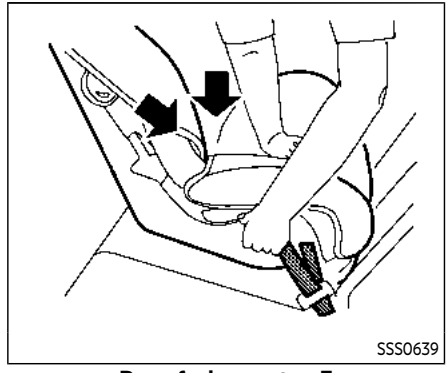

Rear-facing — step 3

3. For child restraints that are equipped with webbing-mounted attachments, remove any additional slack from the anchor attachments. Press downward and rearward firmly in the center of the child restraint with your hand to compress the vehicle seat cushion and seatback while tightening the webbing of the anchor attachments.

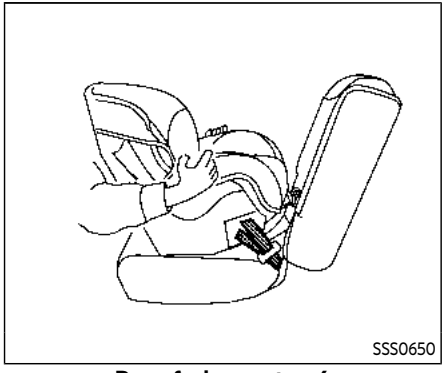

Rear-facing — step 4

4. After attaching the child restraint, test it before you place the child in it. Push it from side to side while holding the child restraint near the LATCH attachment path. The child restraint should not move more than 1 inch (25 mm), from side to side. Try to tug it forward and check to see if the LATCH attachment holds the restraint in place. If the restraint is not secure, tighten the LATCH attachment as necessary, or put the restraint in another seat and test it again. You may need to try a different child restraint or try installing by using the vehicle seat belt (if applicable). Not all child restraints fit in all types of vehicles.
5. Check to make sure the child restraint is properly secured prior to each use. If the child restraint is loose, repeat steps 1 through 4.

REAR-FACING CHILD RESTRAINT INSTALLATION USING THE SEAT BELTS

WARNING

The three-point seat belt with Automatic Locking Retractor (ALR) must be used when installing a child restraint. Failure to use the ALR mode will result in the child restraint not being properly secured. The restraint could tip over or be loose and cause injury to a child in a sudden stop or collision. Also, it can change the operation of the front passenger air bag. See "Front passenger air bag and status light" (P.1-46).

For additional information, refer to all Warnings and Cautions in the "Child safety" (P.1-17) and "Child restraints" (P.1-19) before installing a child restraint.

Do not use the lower anchors if the combined weight of the child and the child restraint exceeds 65 lbs (29.5 kg). If the combined weight of the child and the child restraint is greater than 65 lbs (29.5 kg), use the vehicle's seat belt (not the lower anchors) to install the child restraint. Be sure to follow the child restraint manufacturer's

instructions for installation.

Follow these steps to install a rear-facing child restraint using the vehicle seat belts in the rear seats:

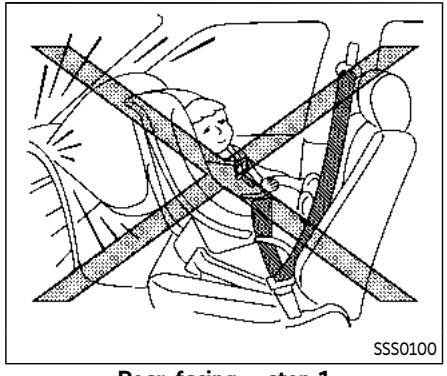

Rear-facing — step 1

1. **Child restraints for infants must be used in the rear-facing direction and therefore must not be used in the front seat.** Position the child restraint on the seat. Always follow the restraint manufacturer's instructions.

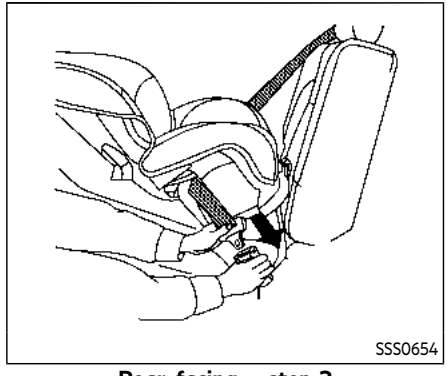

Rear-facing — step 2

2. Route the seat belt tongue through the child restraint and insert it into the buckle until you hear and feel the latch engage. Be sure to follow the child restraint manufacturer's instructions for belt routing.

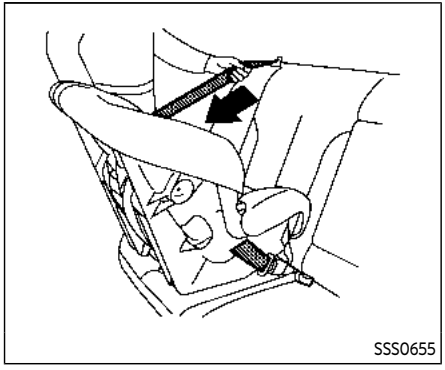

Rear-facing — step 3

3. Pull the shoulder belt until the belt is fully extended. At this time, the seat belt retractor is in the Automatic Locking Retractor (ALR) mode (child restraint mode). It reverts to the Emergency Locking Retractor (ELR) mode when the seat belt is fully retracted.

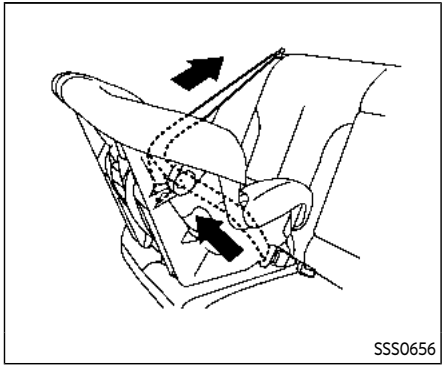

Rear-facing — step 4

4. Allow the seat belt to retract. Pull up on the shoulder belt to remove any slack in the belt.

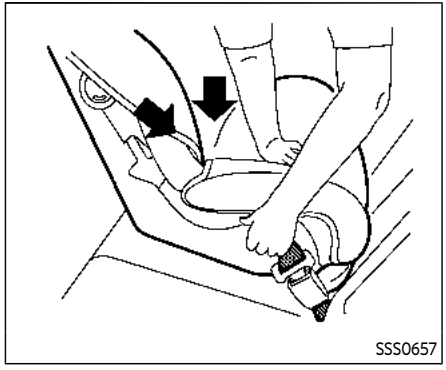

Rear-facing — step 5

5. Remove any additional slack from the seat belt; press downward and rearward firmly in the center of the child restraint to compress the vehicle seat cushion and seatback while pulling up on the seat belt.

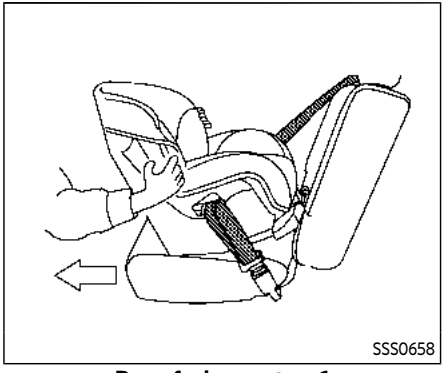

Rear-facing — step 6

6. After attaching the child restraint, test it before you place the child in it. Push it from side to side while holding the child restraint near the seat belt path. The child restraint should not move more than 1 inch (25 mm), from side to side. Try to tug it forward and check to see if the belt holds the restraint in place. If the restraint is not secure, tighten the seat belt as necessary, or put the restraint in another seat and test it again. You may need to try a different child restraint. Not all child restraints fit in all types of vehicles.
7. Check to make sure that the child restraint is properly secured prior to each use. If the seat belt is not locked, repeat steps 1 through 6.

After the child restraint is removed and the seat belt fully retracted, the ALR mode (child restraint mode) is canceled.

FORWARD-FACING CHILD RESTRAINT INSTALLATION USING LATCH

Refer to all Warnings and Cautions in the "Child safety" and "Child restraints" sections before installing a child restraint.

Do not use the lower anchors if the combined weight of the child and the child restraint exceeds 65 lbs (29.5 kg). If the combined weight of the child and the child restraint is greater than 65 lbs (29.5 kg), use the vehicle's seat belt (not the lower anchors) to install the child restraint. Be sure to follow the child restraint manufacturer's instructions for installation.

Follow these steps to install a forward-facing child restraint using the LATCH system:

1. Position the child restraint on the seat. Always follow the child restraint manufacturer's instructions.

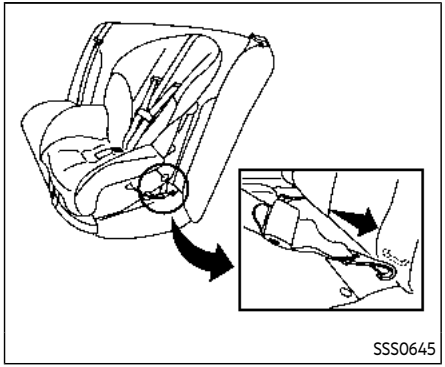

Forward-facing web-mounted — step 2

2. Secure the child restraint anchor attachments to the LATCH lower anchors. Check to make sure the LATCH attachment is properly attached to the lower anchors.

   If the child restraint is equipped with a top tether strap, route the top tether strap and secure the tether strap to the tether anchor point. See "Installing top tether strap" (P.1-30). Do not install child restraints that require the use of a top tether strap in seating positions that do not have a top tether anchor.

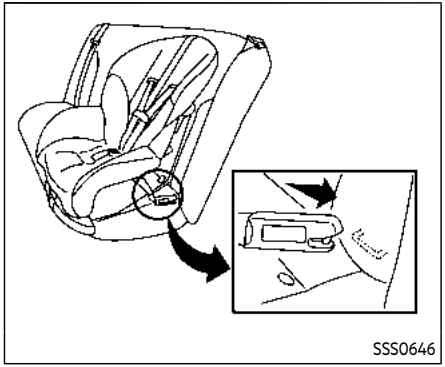

Forward-facing rigid-mounted — step 2

3. The back of the child restraint should be secured against the vehicle seatback.

   If the seating position does not have an adjustable head restraint and it is interfering with the proper child restraint fit, try another seating position or a different child restraint.

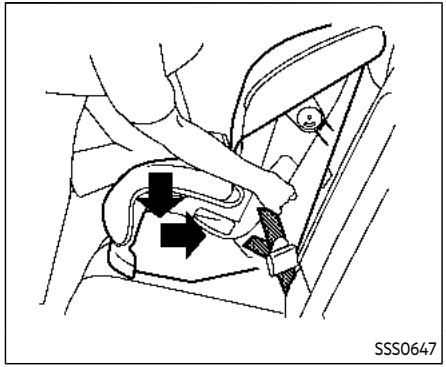

Forward-facing — step 4

4. For child restraints that are equipped with webbing-mounted attachments, remove any additional slack from the anchor attachments. Press downward and rearward firmly in the center of the child restraint with your knee to compress the vehicle seat cushion and seatback while tightening the webbing of the anchor attachments.
5. Tighten the tether strap according to the manufacturer's instructions to remove any slack.

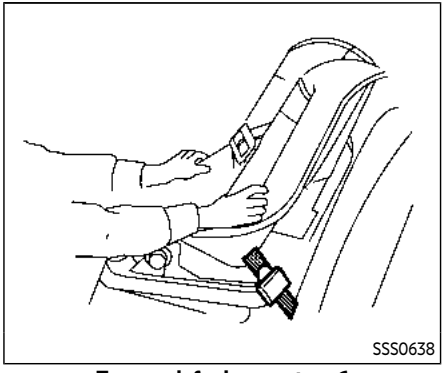

Forward-facing — step 6

6. After attaching the child restraint, test it before you place the child in it. Push it from side to side while holding the child restraint near the LATCH attachment path. The child restraint should not move more than 1 inch (25 mm), from side to side. Try to tug it forward and check to see if the LATCH attachment holds the restraint in place. If the restraint is not secure, tighten the LATCH attachment as necessary, or put the restraint in another seat and test it again. You may need to try a different child restraint. Not all child restraints fit in all types of vehicles.
7. Check to make sure the child restraint is properly secured prior to each use. If the child restraint is loose, repeat steps 1 through 6.

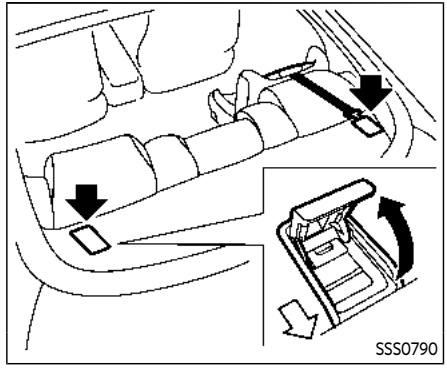

Installing top tether strap

WARNING

Child restraint anchorages are designed to withstand only those loads imposed by correctly fitted child restraints. Under no circumstances are they to be used to attach adult seat belts, or other items or equipment to the vehicle. Doing so could damage the child restraint anchorages. The child restraint will not be properly installed using the damaged anchorage, and a child could be seriously injured or killed in a collision.

The child restraint top tether strap must be used when installing the child restraint with the LATCH lower anchor attachments.

First, secure the child restraint with the LATCH lower anchors (rear outboard seating positions only).

1. Flip up the anchor cover from the anchor point which is located directly behind the child restraint.
2. Position the top tether strap over the top of the seatback.
3. Secure the tether strap to the tether anchor point on the rear parcel shelf.
4. Refer to the appropriate child restraint installation procedure steps in this section before tightening the tether strap.

If you have any questions when installing a top tether strap, it is recommended you visit an INFINITI retailer for this service.

FORWARD-FACING CHILD RESTRAINT INSTALLATION USING THE SEAT BELTS

WARNING

The three-point seat belt with Automatic Locking Retractor (ALR) must be used when installing a child restraint. Failure to use the ALR mode will result in the child restraint not being properly secured. The restraint could tip over or be loose and cause injury to a child in a sudden stop or collision. Also, it can change the operation of the front passenger air bag. See "Front passenger air bag and status light" (P.1-46).

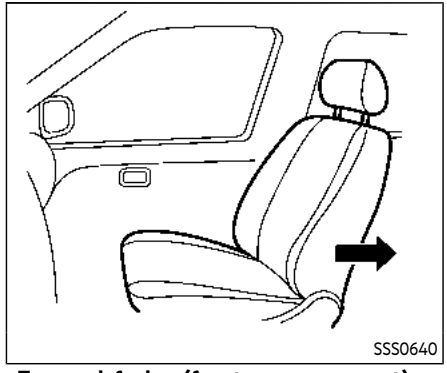

Forward-facing (front passenger seat) — step 1

Refer to all Warnings and Cautions in the "Child safety" and "Child restraints" sections before installing a child restraint.

Do not use the lower anchors if the combined weight of the child and the child restraint exceeds 65 lbs (29.5 kg). If the combined weight of the child and the child restraint is greater than 65 lbs (29.5 kg), use the vehicle's seat belt (not the lower anchors) to install the child restraint. Be sure to follow the child restraint manufacturer's instructions for installation.

Follow these steps to install a forward-facing child restraint using the vehicle seat belt in the rear seats or in the front

passenger seat:

1. **If you must install a child restraint in the front seat, it should be placed in a forward-facing direction only. Move the seat to the rearmost position. Child restraints for infants must be used in the rear-facing direction and, therefore, must not be used in the front seat.**
2. Position the child restraint on the seat. Always follow the child restraint manufacturer's instructions.

   The back of the child restraint should be secured against the vehicle seatback.

   If necessary, adjust or remove the head restraint or headrest to obtain the correct child restraint fit. If the head restraint or headrest is removed, store it in a secure place. **Be sure to reinstall the head restraint or headrest when the child restraint is removed.** See "Head restraints/headrests" (P.1-7) for head restraint or headrest adjustment, removal and installation information.

   If the seating position does not have an adjustable head restraint or headrest and it is interfering with the proper child restraint fit, try another seating position or a different child restraint.

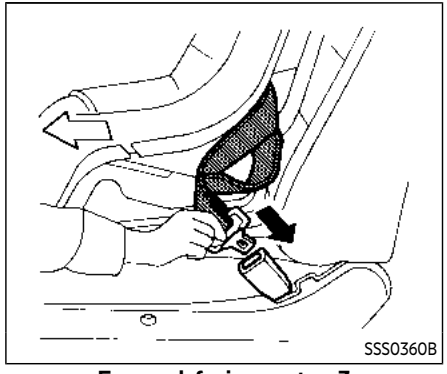

Forward-facing — step 3

3. Route the seat belt tongue through the child restraint and insert it into the buckle until you hear and feel the latch engage. Be sure to follow the child restraint manufacturer's instructions for belt routing.

   If the child restraint is equipped with a top tether strap, route the top tether strap and secure the tether strap to the tether anchor point (rear seat installation only). See "Installing top tether strap" (P.1-34). Do not install child restraints that require the use of a top tether strap in seating positions that do not have a top tether anchor.

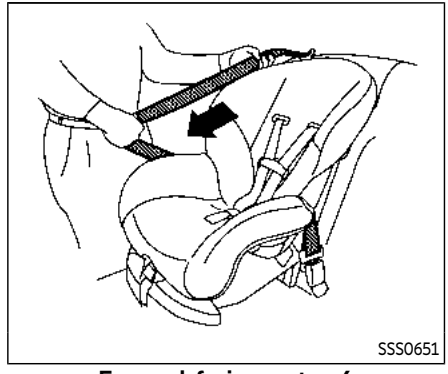

Forward-facing — step 4

4. Pull the shoulder belt until the belt is fully extended. At this time, the seat belt retractor is in the Automatic Locking Retractor (ALR) mode (child restraint mode). It reverts to Emergency Locking Retractor (ELR) mode when the seat belt is fully retracted.

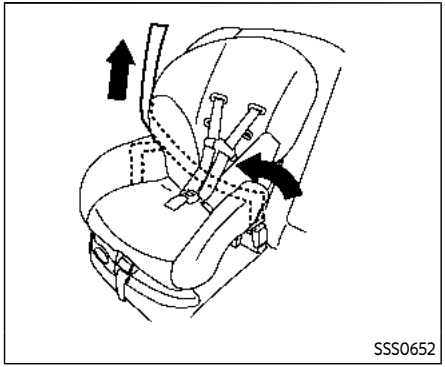

Forward-facing — step 5

5. Allow the seat belt to retract. Pull up on the shoulder belt to remove any slack in the belt.

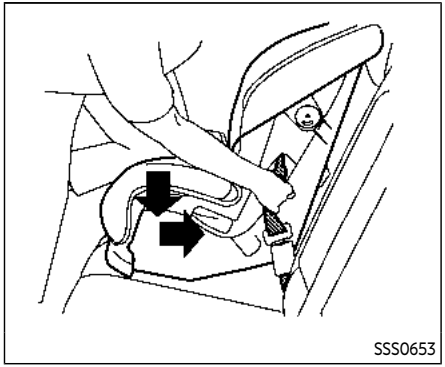

Forward-facing — step 6

6. Remove any additional slack from the seat belt; press downward and rearward firmly in the center of the child restraint with your knee to compress the vehicle seat cushion and seatback while pulling up on the seat belt.
7. Tighten the tether strap according to the manufacturer's instructions to remove any slack.

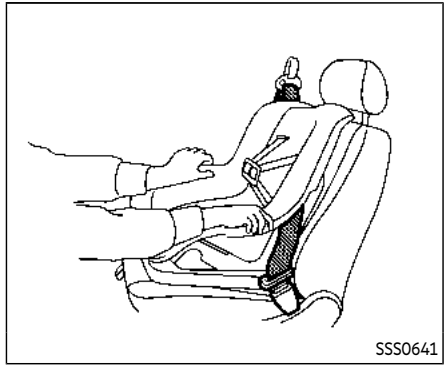

Forward-facing — step 8

8. After attaching the child restraint, test it before you place the child in it. Push it from side to side while holding the child restraint near the seat belt path. The child restraint should not move more than 1 inch (25 mm), from side to side. Try to tug it forward and check to see if the belt holds the restraint in place. If the restraint is not secure, tighten the seat belt as necessary, or put the restraint in another seat and test it again. You may need to try a different child restraint. Not all child restraints fit in all types of vehicles.
9. Check to make sure the child restraint is properly secured prior to each use. If the

seat belt is not locked, repeat steps 2 through 8.

Forward-facing — step 10

10. If the child restraint is installed in the front passenger seat, place the ignition switch in the ON position. The front passenger air bag status light should illuminate. If this light is not illuminated, see "Front passenger air bag and status light" (P.1-46). **Move the child restraint to another seating position.** Have the system checked. It is recommended you visit an INFINITI retailer for this service.

After the child restraint is removed and the seat belt is fully retracted, the ALR mode (child restraint mode) is canceled.

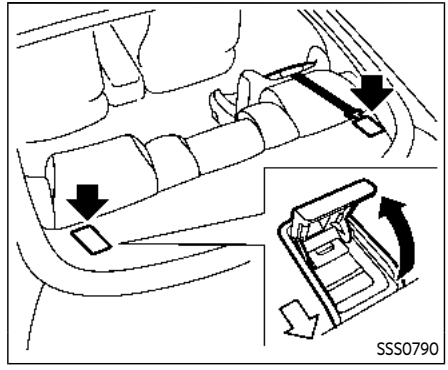

Installing top tether strap

WARNING

Child restraint anchorages are designed to withstand only those loads imposed by correctly fitted child restraints. Under no circumstances are they to be used to attach adult seat belts, or other items or equipment to the vehicle. Doing so could damage the child restraint anchorages. The child restraint will not be properly installed using the damaged anchorage, and a child could be seriously injured or killed in a collision.

The child restraint top tether strap must be used when installing the child restraint with the seat belts.

First, secure the child restraint with the seat belt.

1. Flip up the anchor cover from the anchor point which is located directly behind the child restraint.
2. Position the top tether strap over the top of the seatback.
3. Secure the tether strap to the tether anchor point on the rear parcel shelf.
4. Refer to the appropriate child restraint installation procedure steps in this section before tightening the tether strap.

If you have any questions when installing a top tether strap, it is recommended you visit an INFINITI retailer for this service.

BOOSTER SEATS

Precautions on booster seats

WARNING

If a booster seat and seat belt are not used properly, the risk of a child being injured or killed in a sudden stop or collision greatly increases:

- **Make sure the shoulder portion of the belt is away from the child's face and neck and the lap portion of the belt does not cross the stomach.**
- **Make sure the shoulder belt is not behind the child or under the child's arm.**
- **A booster seat must only be installed in a seating position that has a lap/shoulder belt.**

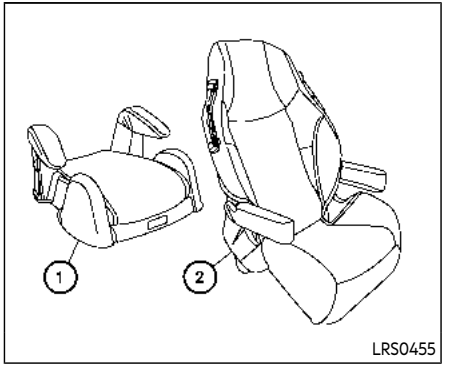

Booster seats of various sizes are offered by several manufacturers. When selecting any booster seat, keep the following points in mind:

- Choose only a booster seat with a label certifying that it complies with Federal Motor Vehicle Safety Standard 213 or Canadian Motor Vehicle Safety Standard 213.
- Check the booster seat in your vehicle to be sure it is compatible with the vehicle's seat and seat belt system.

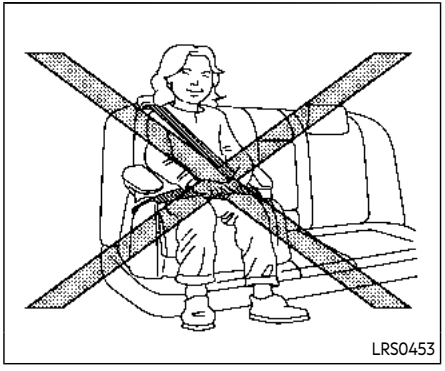

- Make sure the child's head will be properly supported by the booster seat or vehicle seat. The seatback must be at or above the center of the child's ears. For example, if a low back booster seat ① is chosen, the vehicle seatback must be at or above the center of the child's ears. If the seatback is lower than the center of the child's ears, a high back booster seat ② should be used.

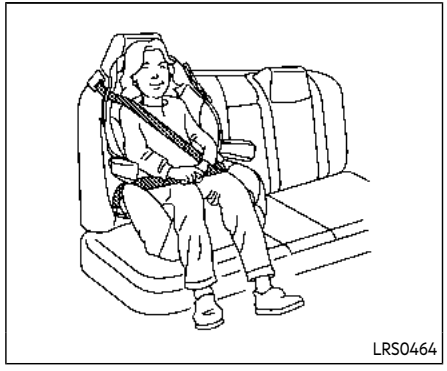

- If the booster seat is compatible with your vehicle, place your child in the booster seat and check the various adjustments to be sure the booster seat is compatible with your child. Always follow all recommended procedures.

All U.S. states and Canadian provinces or territories require that infants and small children be restrained in an approved child restraint at all times while the vehicle is being operated.

The instructions in this section apply to booster seat installation in the rear seats or the front passenger seat.

Booster seat installation

CAUTION

To avoid injury to child, do not use the lap/shoulder belt Automatic Locking Retractor (ALR) mode when using a booster seat with the seat belts.

Refer to all Warnings and Cautions in the "Child safety", "Child restraints" and "Booster seats" sections earlier in this section before installing a child restraint.

Follow these steps to install a booster seat in the rear seat or in the front passenger seat:

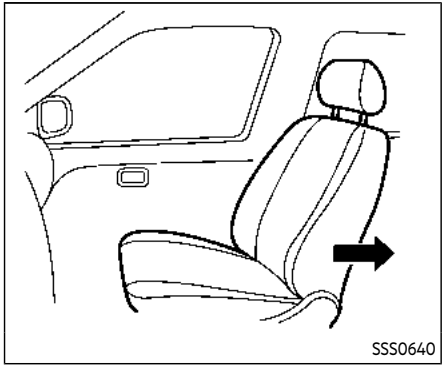

1. **If you must install a booster seat in the front seat, move the seat to the rearmost position.**
2. Position the booster seat on the seat. Only place it in a forward-facing direction. Always follow the booster seat manufacturer's instructions.

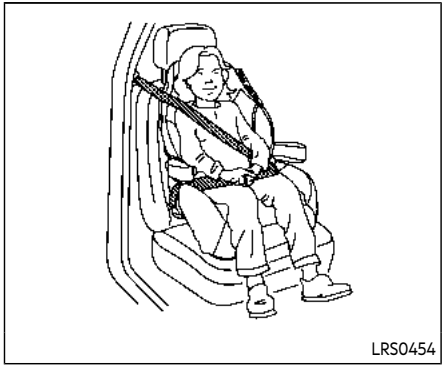

Front passenger position

3. The booster seat should be positioned on the vehicle seat so that it is stable.

   If necessary, adjust or remove the head restraint or headrest to obtain the correct booster seat fit. If the head restraint or headrest is removed, store it in a secure place. **Be sure to reinstall the head restraint or headrest when the booster seat is removed.** See "Head restraints/headrests" (P.1-7) for head restraint or headrest adjustment, removal and installation information.

   If the seating position does not have an adjustable head restraint or headrest and it is interfering with the proper booster seat fit, try another seating position or a different booster seat.
4. Position the lap portion of the seat belt low and snug on the child's hips. Be sure to follow the booster seat manufacturer's instructions for adjusting the seat belt routing.
5. Pull the shoulder belt portion of the seat belt toward the retractor to take up extra slack. Be sure the shoulder belt is positioned across the top, middle portion of the child's shoulder. Be sure to follow the booster seat manufacturer's instructions for adjusting the seat belt routing.
6. Follow the warnings, cautions and instructions for properly fastening a seat belt shown in "Seat belts" (P.1-11).

7. If the booster seat is installed in the front passenger seat, place the ignition switch in the ON position. The front passenger air bag status light may or may not illuminate depending on the size of the child and the type of booster seat used. See "Front passenger air bag and status light" (P.1-46).

PRECAUTIONS ON SUPPLEMENTAL RESTRAINT SYSTEM

This Supplemental Restraint System (SRS) section contains important information concerning the following systems:

- Driver and passenger front-impact supplemental air bags (INFINITI Advanced Air Bag System)
- Front seat-mounted side-impact supplemental air bag
- Roof-mounted curtain side-impact and rollover supplemental air bag
- Seat belt with pretensioner

Supplemental front-impact air bag system: The INFINITI Advanced Air Bag System can help cushion the impact force to the head and chest of the driver and front passenger in certain frontal collisions.

Front seat-mounted side-impact supplemental air bag system: This system can help cushion the impact force to the chest and pelvis area of the driver and front passenger in certain side impact collisions. The side air bag is designed to inflate on the side where the vehicle is impacted.

Roof-mounted curtain side-impact and rollover supplemental air bag system: This system can help cushion the impact force to the head of occupants in front and rear outboard seating positions in certain side impact or rollover collisions. In a side impact, the curtain air bags are designed to inflate on the side where the vehicle is impacted. In a rollover, curtain air bags on both sides are designed to inflate and remain inflated for a short time.

Curtain air bags are also designed to inflate in certain types of rollover collisions or near rollovers. As a result, certain vehicle movements may cause the curtain air bags to inflate.

These supplemental restraint systems are designed to **supplement** the crash protection provided by the driver and passenger seat belts and are **not a substitute** for them. Seat belts should always be correctly worn and the occupant seated a suitable distance away from the steering wheel, instrument panel and door finishers. (See "Seat belts" (P.1-11) for instructions and precautions on seat belt usage.)

The supplemental air bags operate only when the ignition switch is in the ON position.

After placing the ignition switch in the ON position, the supplemental air bag warning light illuminates. The supplemental air bag warning light will turn off after about 7 seconds if the systems are operational.

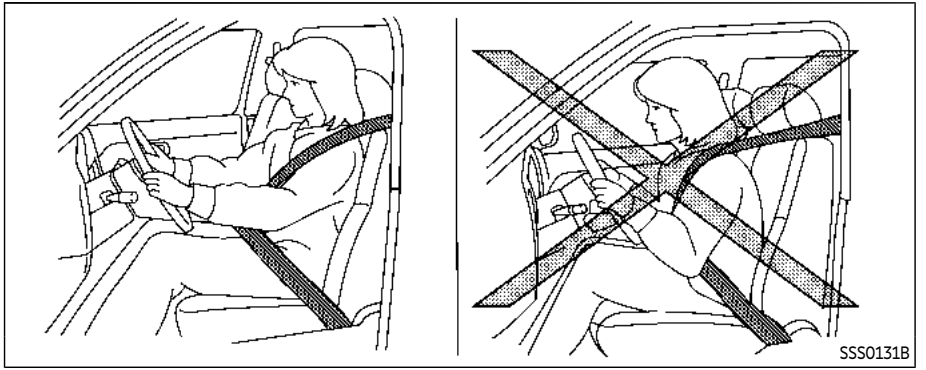

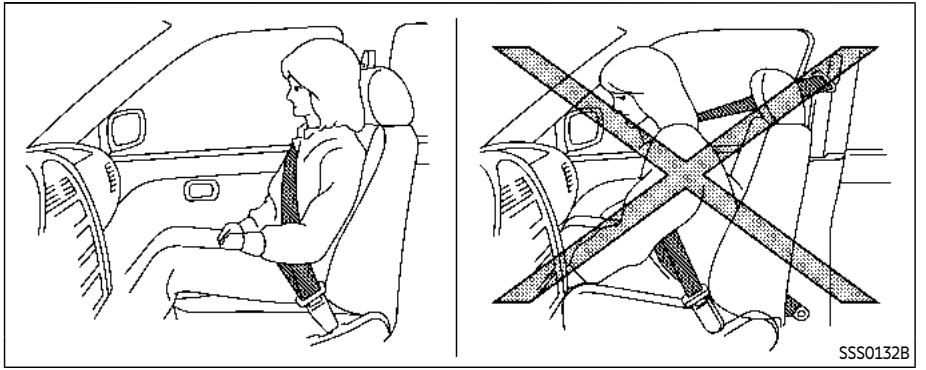

WARNING

- **The front air bags ordinarily will not inflate in the event of a side impact, rear impact, rollover, or lower severity frontal collision. Always wear your seat belts to help reduce the risk or severity of injury in various kinds of accidents.**
- **The front passenger air bag will not inflate if the passenger air bag status light is lit. See "Front passenger air bag and status light" (P.1-46).**
- **The seat belts and the front air bags are most effective when you are sitting well back and upright in the seat with both feet on the floor. The front air bags inflate with great force. Even with the INFINITI Advanced Air Bag System, if you are unrestrained, leaning forward, sitting sideways or out of position in any way, you are at greater risk of injury or death in a crash. You may also receive serious or fatal injuries from the front air bag if you are up against it when it inflates. Always sit back against the seatback and as far-away as practical from the steering wheel or instrument panel. Always use the seat belts.**

- **The driver and front passenger seat belt buckles are equipped with sensors that detect if the seat belts are fastened. The Advanced Air Bag System monitors the severity of a collision and seat belt usage then inflates the air bags as needed. Failure to properly wear seat belts can increase the risk or severity of injury in an accident.**
- **The front passenger seat is equipped with occupant classification sensors (weight sensors) that turn the front passenger air bag OFF under some conditions. These sensors are only used in this seat. Failure to be properly seated and wearing the seat belt can increase the risk or severity of injury in an accident. See "Front passenger air bag and status light" (P.1-46).**
- **Keep hands on the outside of the steering wheel. Placing them inside the steering wheel rim could increase the risk of injury if the front air bag inflates.**

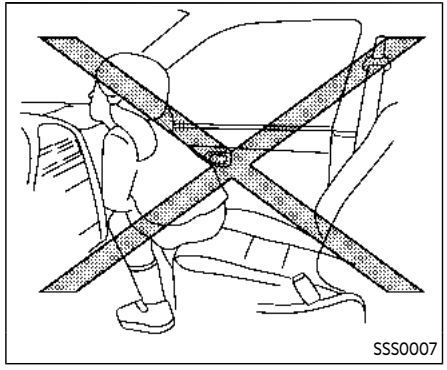
SSS0007

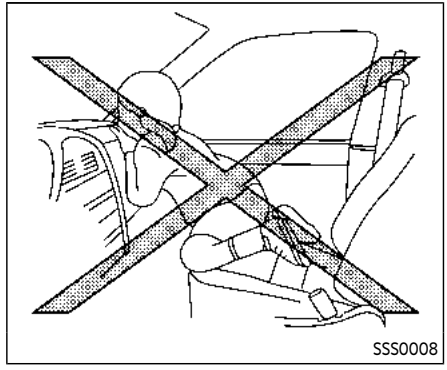
SSS0008

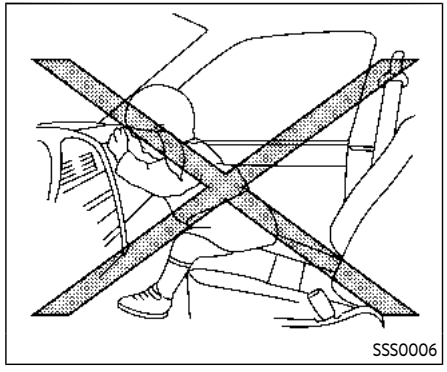
SSS0006

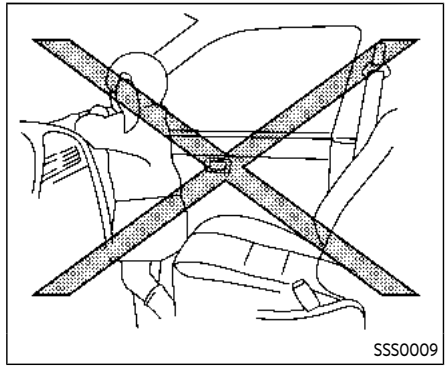
SSS0009

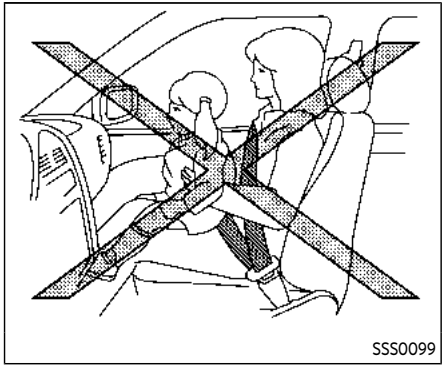
SSS0099

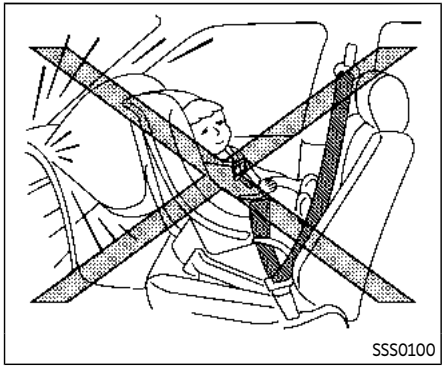
SSS0100

WARNING

- **Never let children ride unrestrained or extend their hands or face out of the window. Do not attempt to hold them in your lap or arms. Some examples of dangerous riding positions are shown in the illustrations.**
- **Children may be severely injured or killed when the front air bags, side air bags or curtain air bags inflate if they are not properly restrained. Preteens and children should be properly restrained in the rear seat, if possible.**
- **Even with the INFINITI Advanced Air Bag System, never install a rear-facing child restraint in the front seat. An inflating front air bag could seriously injure or kill your child. See "Child restraints" (P.1-19) for details.**

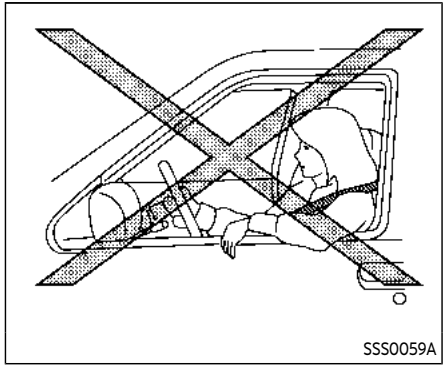
SSS0059A

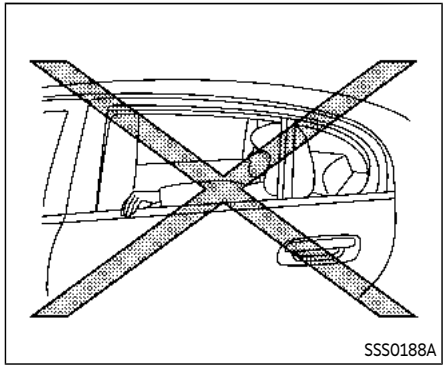
SSS0188A

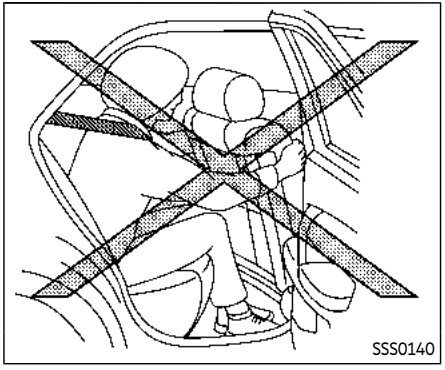

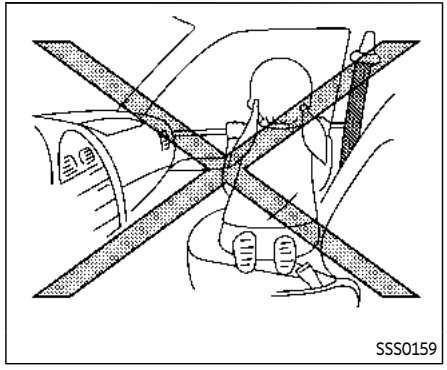

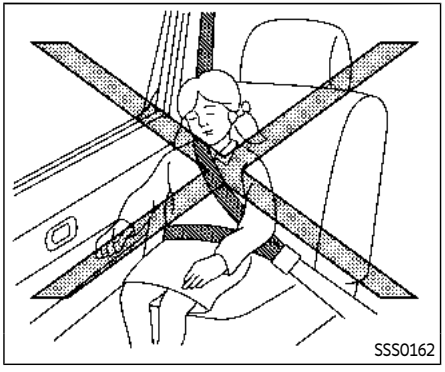

WARNING

Front seat-mounted side-impact supplemental air bags and roof-mounted curtain side-impact and rollover supplemental air bags:

- **The side air bags ordinarily will not inflate in the event of a front impact, rear impact, rollover, or lower severity side collision. Always wear your seat belts to help reduce the risk or severity of injury in various kinds of accidents.**
- **The curtain air bags ordinarily will not inflate in the event of a front impact, rear impact, or lower severity side collision. Always wear your seat belts to help reduce the risk or severity of injury in various kinds of accidents.**
- **The seat belts, the side air bags and curtain air bags are most effective when you are sitting well back and upright in the seat. The side air bag and curtain air bag inflate with great force. Do not allow anyone to place their hand, leg or face near the side air bag on the side of the seatback of the front seat or near the side roof rails. Do not allow anyone sitting in the front seats or rear outboard seats to extend their hand out of the window or lean against the door. Some examples of dangerous riding positions are shown in the previous illustrations.**
- **When sitting in the rear seat, do not hold onto the seatback of the front seat. If the supplemental side air bag inflates, you may be seriously injured. Be especially careful with children, who should always be properly restrained. Some examples of dangerous riding positions are shown in the illustrations.**

- **Do not use seat covers on the front seatbacks. They may interfere with side air bag inflation.**

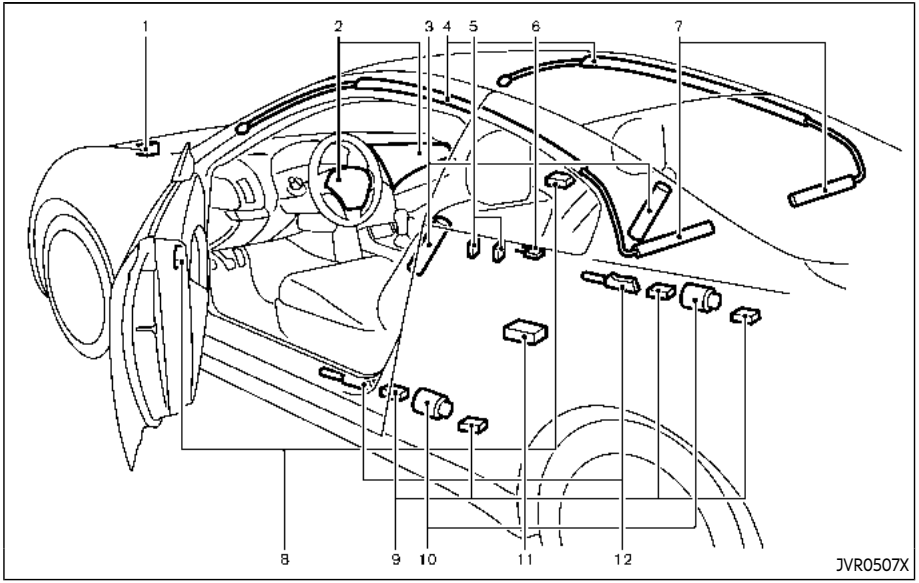

1. Crash zone sensor
2. Supplemental front air bag modules (INFINITI Advanced Air Bags)
3. Front seat-mounted side-impact supplemental air bags
4. Roof-mounted curtain side-impact and rollover supplemental air bags
5. Occupant classification sensors (weight sensors)
6. Occupant classification system control unit
7. Roof-mounted curtain side-impact and rollover supplemental air bag inflators
8. Pressure sensors in door
9. Satellite sensors
10. Seat belts with pretensioners
11. Air bag Control Unit (ACU)
12. Lap outer pretensioners

INFINITI ADVANCED AIR BAG SYSTEM (front seats)

WARNING

To ensure proper operation of the passenger's Advanced Air Bag System, observe the following items.

- **Do not allow a passenger in the rear seat to push or pull on the seatback pocket.**
- **Do not place heavy loads heavier than 9.1 lbs. (4 kg) on the seatback, head restraint or in the seatback pocket.**
- **Make sure that there is nothing pressing against the rear of the seatback, such as a child restraint installed in the rear seat or an object stored on the floor.**
- **Make sure that there is no object placed under the front passenger seat.**

- **Make sure that there is no object placed between the seat cushion and center console or between the seat cushion and the door.**
- **Confirm the operating condition with the front passenger air bag status light.**
- **Be sure that the front passenger seat does not contact the rear seat, instrument panel, etc., or the head restraint does not contact the roof.**
- **If you notice that the front passenger air bag status light is not operating as described in this section, it is recommended you visit an INFINITI retailer to check the passenger seat Advanced Air Bag System.**
- **Until you have confirmed with a retailer that your passenger seat Advanced Air Bag System is working properly, position the occupants in the rear seating positions.**
- **Do not position the front passenger seat so it contacts the rear seat. If the front seat does contact the rear seat, the air bag system may determine a sensor malfunction has occurred and the front passenger air bag status light may illuminate and the supplemental air bag warning light may flash.**

This vehicle is equipped with the INFINITI Advanced Air Bag System for the driver and front passenger seats. This system is designed to meet certification requirements under U.S. regulations. It is also permitted in Canada. **All of the information, cautions and warnings in this manual apply and must be followed.**

The driver supplemental front-impact air bag is located in the center of the steering wheel. The front passenger supplemental front-impact air bag is mounted in the instrument panel above the glove box. The front air bags are designed to inflate in higher severity frontal collisions, although they may inflate if the forces in another type of collision are similar to those of a higher severity frontal impact. They may not inflate in certain frontal collisions. Vehicle damage (or lack of it) is not always an indication of proper front air bag operation.

The INFINITI Advanced Air Bag System has dual stage air bag inflators. The system monitors information from the crash zone sensor, the Air bag Control Unit (ACU), seat belt buckle switches and the occupant classification sensors (weight sensors). Inflator operation is based on the severity of a collision and seat belt usage for the driver. For the front passenger, the occupant classification sensors are also monitored. Based on information from the sensors, only one front air bag may inflate in a crash, depending on the crash severity and whether the front occupants are belted or unbelted. Additionally, the front passenger air bag may be automatically turned OFF under some conditions, depending on the information provided by the occupant classification sensors. If the front passenger air bag is OFF, the front passenger air bag status light will be illuminated. (See “Front passenger air bag and status light” (P.1-46) for further details.) One front air bag inflating does not indicate improper performance of the system.

If you have any questions about your air bag system, it is recommended you visit an INFINITI retailer to obtain information about the system. If you are considering modification of your vehicle due to a disability, you may also contact an INFINITI retailer. Contact information is contained in the front of this Owner’s Manual.

When a front air bag inflates, a fairly loud noise may be heard, followed by release of smoke. This smoke is not harmful and does not indicate a fire. Care should be taken not to inhale it, as it may cause irritation and choking. Those with a history of a breathing condition should get fresh air promptly.

Front air bags, along with the use of seat belts, help to cushion the impact force on the head and chest of the front occupants. They can help save lives and reduce serious injuries. However, an inflating front air bag may cause facial abrasions or other injuries. Front air bags do not provide restraint to the lower body.

Even with INFINITI advanced air bags, seat belts should be correctly worn and the driver and passenger seated upright as far as practical away from the steering wheel or instrument panel. The front air bags inflate quickly in order to help protect the front occupants. Because of this, the force of the front air bag inflating can increase the risk of injury if the occupant is too close to, or is against, the air bag module during inflation.

The front air bags deflate quickly after a collision.

The front air bags operate only when the ignition switch is in the ON position.

After placing the ignition switch in the ON position, the supplemental air bag warning light illuminates. The supplemental air bag warning light will turn off after about 7 seconds if the system is operational.

Front passenger air bag and status light

WARNING

The front passenger air bag is designed to automatically turn OFF under some conditions. Read this section carefully to learn how it operates. Proper use of the seat, seat belt and child restraints is necessary for most effective protection. Failure to follow all instructions in this manual concerning the use of seats, seat belts and child restraints can increase the risk or severity of injury in an accident.

Status light:

The front passenger seat is equipped with an occupant classification sensors (weight sensors) that turn the front passenger air bag on or off depending on the weight applied to the front passenger seat. The status of the front passenger air bag (ON or OFF) is indicated by the front passenger air bag status light which is located on the instrument panel.

After the ignition switch is placed in the ON position, the front passenger air bag status light illuminates for about 7 seconds and then turns off or remains illuminated depending on the front passenger seat occupied status. The light operates as follows:

CONDITION	DESCRIPTION	PASSENGER AIR BAG STATUS LIGHT (🪑)	FRONT PASSENGER AIR BAG STATUS
Empty	Empty front passenger seat	ON (illuminated)	INHIBITED
Nobody/Somebody	Bag or Child or Child Restraint or Small Adult in the front passenger seat	ON (illuminated)	INHIBITED
Adult	Adult in the front passenger seat	OFF (dark)	ACTIVATED

In addition to the above, certain objects placed on the front passenger seat may also cause the light to operate as described above depending on their weight.

For additional information related to the normal operation and troubleshooting of this occupant classification sensor system, please refer to “Normal operation” (P.1-49) and “Troubleshooting” (P.1-50).

Front passenger air bag:

The front passenger air bag is designed to automatically turn OFF when the vehicle is operated under some conditions as described below in accordance with U.S. regulations. If the front passenger air bag is OFF, it will not inflate in a crash. The driver air bag and other air bags in your vehicle are not part of this system.

The purpose of the regulation is to help reduce the risk of injury or death from an inflating air bag to certain front passenger seat occupants, such as children, by requiring the air bag to be automatically turned OFF. Certain sensors are used to meet the requirements.

The occupant classification sensor in this vehicle is a weight sensor. It is designed to detect an occupant and objects on the seat by weight. For example, if a child is in the front passenger seat, the Advanced Air Bag System is designed to turn the passenger air bag OFF in accordance with the regulations. Also, if a child restraint of the type specified in the regulations is on the seat, its weight and the child’s weight can be detected and cause the air bag to turn OFF.

Front passenger seat adult occupants who are properly seated and using the seat belt as outlined in this manual should not cause the passenger air bag to be automatically turned OFF. For small adults it may be turned OFF, however, if the occupant takes his/her weight off the seat cushion (for example, by not sitting upright, by sitting on an edge of the seat, or by otherwise being out of position), this could cause the sensor to turn the air bag OFF. Always be sure to be seated and wearing the seat belt properly for the most effective protection by the seat belt and supplemental air bag.

INFINITI recommends that pre-teens and children be properly restrained in a rear seat. INFINITI also recommends that appropriate child restraints and booster seats be properly installed in a rear seat. If this is not possible, the occupant classification sensor is designed to operate as described above to turn the front passenger air bag OFF for specified child restraints as required by the regulations. Failing to properly secure child restraints and to use the ALR mode may allow the restraint to tip or move in a collision or sudden stop. This can also result in the passenger air bag inflating in a crash instead of being OFF. For additional information, refer to “Child restraints” (P.1-19) for proper use and installation.

If the front passenger seat is not occupied, the passenger air bag is designed not to inflate in a crash. However, heavy objects placed on the seat could result in air bag inflation, because of the object’s weight detected by the occupant classification sensor. Other conditions could also result in air bag inflation, such as if a child is standing on the seat, or if two children are on the seat, contrary to the instructions in this manual. Always be sure that you and all vehicle occupants are seated and restrained properly.

Using the front passenger air bag status light, you can monitor when the front passenger air bag is automatically turned OFF.

If an adult occupant is in the seat but the front passenger air bag status light is illuminated (indicating that the air bag is OFF), it could be that the person is a small adult, or is not sitting on the seat properly or not using the seat belt properly.

If a child restraint must be used in the front seat, the front passenger air bag status light may or may not be illuminated, depending on the size of the child and the type of child

restraint being used. If the front passenger air bag status light is not illuminated (indicating that the air bag might inflate in a crash), it could be that the child restraint or seat belt is not being used properly. Make sure that the child restraint is installed properly, the seat belt is used properly and the occupant is positioned properly. If the front passenger air bag status light is still not illuminated, reposition the occupant or child restraint in a rear seat.

If the front passenger air bag status light will not illuminate even though you believe that the child restraint, the seat belts and the occupant are properly positioned, it is recommended that you take your vehicle to an INFINITI retailer. An INFINITI retailer can check system status by using a special tool. However, until you have confirmed with your retailer that your air bag is working properly, reposition the occupant or child restraint in a rear seat.

The INFINITI Advanced Air Bag System and front passenger air bag status light will take a few seconds to register a change in the passenger seat status. This is normal system operation and does not indicate a malfunction.

If a malfunction occurs in the front passenger air bag system, the supplemental air bag warning light , located in the meter and gauges area of the instrument panel, will be illuminated (blinking or steadily lit). Have the system checked. It is recommended you visit an INFINITI retailer for this service.

Normal operation:

In order for the occupant classification sensor system to classify the front passenger based on weight, please follow the precautions and steps outlined below:

Precautions

- Make sure that there are no objects weighing over 9.1 lbs (4 kg) hanging on the seat or placed in the seatback pocket.
- Make sure that a child restraint or other object is not pressing against the rear of the seatback.
- Make sure that a rear passenger is not pushing or pulling on the back of the front passenger seat.
- Make sure that the front passenger seat or seatback is not forced back against an object on the seat or floor behind it.
- Make sure that there is no object placed under the front passenger seat.
- Make sure that the front passenger seat head restraint does not contact the roof when adjusting the front passenger seat.

Steps

1. Adjust the seat as outlined in “Seats” (P.1-2). Sit upright, leaning against the seatback, and centered on the seat cushion with your feet comfortably extended to the floor.
2. Make sure there are no objects on your lap.
3. Fasten the seat belt as outlined in “Seat belts” (P.1-11). Front passenger seat belt buckle status is monitored by the occupant classification sensor system, and is used as an input to determine occupancy status. So, it is highly recommended that the front passenger fastens his/her seat belt.
4. Remain in this position for 30 seconds allowing the system to classify the front passenger before the vehicle is put into motion.
5. Ensure proper classification by checking the front passenger air bag status light.

NOTE:

This vehicle’s occupant classification sensor system generally keeps the classification locked during driving, so it is important that you confirm that the front passenger is properly classified prior to driving. However, the occupant classification sensor may recalculate the weight of the occupant under some conditions (both while driving and when stopped), so the front passenger seat occupant should continue to remain seated as outlined above.

Troubleshooting:

If you think the front passenger air bag status light is incorrect:

1. If the light is ON with an adult occupying the front passenger seat:
   - Occupant is a small adult - the air bag status light is functioning as intended. The front passenger air bag is suppressed.

   However, if the occupant is not a small adult, then this may be due to the following conditions that may be interfering with the weight sensors:
   - Occupant is not sitting upright, leaning against the seatback, and centered on the seat cushion with his/her feet comfortably extended to the floor.
   - A child restraint or other object pressing against the rear of the seatback.
   - A rear passenger pushing or pulling on the back of the front passenger seat.
   - Forcing the front seat or seatback against an object on the seat or floor behind it.
   - An object placed under the front passenger seat.
   - An object placed between the seat cushion and center console or between the seat cushion and the door.

   If the vehicle is moving, please come to a stop when it is safe to do so. Check and correct any of the above conditions. Restart the vehicle and wait 1 minute.

NOTE:

A system check will be performed during which the front passenger air bag status light will remain lit for about 7 seconds initially.

If the light is still ON after this, the person should be advised not to ride in the front passenger seat and the vehicle should be checked by an INFINITI retailer as soon as possible.

2. If the light is OFF with a small adult, child or child restraint occupying the front passenger seat:

   This may be due to the following conditions that may be interfering with the weight sensors:
   - Small adult or child is not sitting upright, leaning against the seatback, and centered on the seat cushion with his/her feet comfortably extended to the floor.
   - The child restraint is not properly installed as outlined in "Child restraints" (P.1-19).
   - An object weighing over 9.1 lbs (4 kg) hanging on the seat or placed in the seatback pocket.
   - A child restraint or other object pressing against the rear of the seatback.
   - A rear passenger pushing or pulling on the back of the front passenger seat.
   - Forcing the front seat or seatback against an object on the seat or floor behind it.
   - An object placed under the front passenger seat.
   - An object placed between the seat cushion and center console.
   - The front passenger seat head restraint contacting the roof.

   If the vehicle is moving, please come to a stop when it is safe to do so. Check and correct any of the above conditions. Restart the vehicle and wait 1 minute.

NOTE:

A system check will be performed during which the front passenger air bag status light will remain lit for about 7 seconds initially.

If the light is still OFF after this, the small adult, child or child restraint should be repositioned in the rear seat and the vehicle should be checked by an INFINITI retailer as soon as possible.

3. If the light is OFF with no front passenger and no objects on the front passenger seat, the vehicle should be checked by an INFINITI retailer as soon as

possible.

Other supplemental front-impact air bag precautions

WARNING

- **Do not place any objects on the steering wheel pad or on the instrument panel. Also, do not place any objects between any occupant and the steering wheel or instrument panel. Such objects may become dangerous projectiles and cause injury if the front air bags inflate.**
- **Do not place objects with sharp edges on the seat. Also, do not place heavy objects on the seat that will leave permanent impressions in the seat. Such objects can damage the seat or occupant classification sensors (weight sensors). This can affect the operation of the air bag system and result in serious personal injury.**
- **Do not use water or acidic cleaners (hot steam cleaners) on the seat. This can damage the seat or occupant classification sensors. This can also affect the operation of the air bag system and result in serious personal injury.**
- **Immediately after inflation, several front air bag system components will be hot. Do not touch them; you may severely burn yourself.**
- **No unauthorized changes should be made to any components or wiring of the air bag system. This is to prevent accidental inflation of the supplemental air bag or damage to the supplemental air bag system.**
- **Do not make unauthorized changes to your vehicle's electrical system, suspension system or front end structure. This could affect proper operation of the front air bag system.**
- **Tampering with the air bag system may result in serious personal injury. Tampering includes changes to the steering wheel and the instrument panel assembly by placing material over the steering wheel pad and above the instrument panel or by installing additional trim material around the air bag system.**
- **Removing or modifying the front passenger seat may affect the function of the air bag system and result in serious personal injury.**
- **Modifying or tampering with the front passenger seat may result in serious personal injury. For example, do not change the front seats by placing material on the seat cushion or by installing additional trim material, such as seat covers, on the seat that is not specifically designed to assure proper air bag operation. Additionally, do not stow any objects under the front passenger seat or the seat cushion and seatback. Such objects may interfere with the proper operation of the occupant classification sensors.**
- **No unauthorized changes should be made to any components or wiring of the seat belt system. This may affect the front air bag system. Tampering with the seat belt system may result in serious personal injury.**
- **It is recommended you visit an INFINITI retailer for work on and around the front air bag. It is also recommended you visit an INFINITI retailer for installation of electrical equipment. The Supplemental Restraint System (SRS) wiring harnesses* should not be modified or disconnected. Unauthorized electrical test equipment and probing devices should not be used on the air bag system.**

- **A cracked windshield should be replaced immediately by a qualified repair facility. A cracked windshield could affect the function of the supplemental air bag system.**

* **The SRS wiring harness connectors are yellow and orange for easy identification.**

When selling your vehicle, we request that you inform the buyer about the front air bag system and guide the buyer to the appropriate sections in this Owner's Manual.

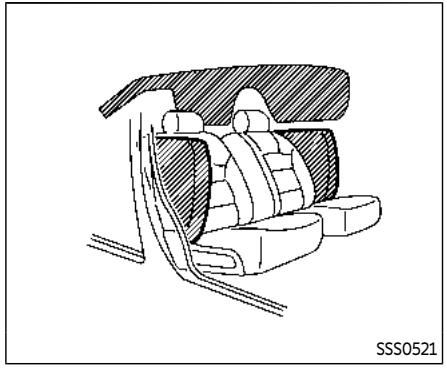

FRONT SEAT-MOUNTED SIDE-IMPACT SUPPLEMENTAL AIR BAG AND ROOF-MOUNTED CURTAIN SIDE-IMPACT AND ROLLOVER SUPPLEMENTAL AIR BAG SYSTEMS

The side air bags are located in the outside of the seatback of the front seats. The curtain air bags are located in the side roof rails. **All of the information, cautions and warnings in this manual apply and must be followed.** The side air bags and curtain air bags are designed to inflate in higher severity side collisions, although they may inflate if the forces in another type of collision are similar to those of a higher severity impact. They are designed to inflate on the side where the vehicle is impacted. They may not inflate in certain side collisions.

Curtain air bags are also designed to inflate in certain types of rollover collisions or near rollovers. As a result, certain vehicle movements may cause the curtain air bags to inflate.

Vehicle damage (or lack of it) is not always an indication of proper supplemental side air bag and curtain side-impact air bag operation.

When side air bags and curtain air bags inflate, a fairly loud noise may be heard, followed by release of smoke. This smoke is not harmful and does not indicate a fire. Care should be taken not to inhale it, as it may cause irritation and choking. Those with a history of a breathing condition should get fresh air promptly.

Side air bags, along with the use of seat belts, help to cushion the impact force on the chest of the front occupants. Curtain air bags help to cushion the impact force to the head of occupants in the front and rear outboard seating positions in all rows. They can help save lives and reduce serious injuries. However, an inflating side air bags and curtain air bags may cause abrasions or

other injuries. Side air bags and curtain air bags do not provide restraint to the lower body.

The seat belts should be correctly worn and the driver and passenger seated upright as far as practical away from the side air bag. Rear seat passengers should be seated as far away as practical from the door finishers and side roof rails. The side air bags and curtain air bags inflate quickly in order to help protect the occupants. Because of this, the force of the side air bags and curtain air bags inflating can increase the risk of injury if the occupant is too close to, or is against, these air bag modules during inflation. In a rollover, the curtain air bags on both sides are designed to inflate. Under both side-impact situations, the curtain air bags will remain inflated for a short period of time.

The side air bags and curtain air bags operate only when the ignition switch is in the ON position.

After placing the ignition switch in the ON position, the supplemental air bag warning light illuminates. The air bag warning light will turn off after about 7 seconds if the systems are operational.

⚠ WARNING

- **Do not place any objects near the seatback of the front seats. Also, do not place any objects (an umbrella, bag, etc.) between the door finisher and the front seat. Such objects may become dangerous projectiles and cause injury if side air bag inflates.**
- **Right after inflation, several side air bags and curtain air bag system components will be hot. Do not touch them; you may severely burn yourself.**
- **No unauthorized changes should be made to any components or wiring of side air bag and curtain air bags. This is to prevent damage to or accidental inflation of the side air bag and curtain air bag systems.**
- **Do not make unauthorized changes to your vehicle's electrical system, suspension system or side panel. This could affect proper operation of the side air bag and curtain air bag systems.**
- **Tampering with the air bag system may result in serious personal injury. For example, do not change the front seats by placing material near the seatback or by installing additional trim material, such as seat covers, around the side air bags.**
- **It is recommended you visit an INFINITI retailer for work on and around the side air bag and curtain air bag. It is also recommended you visit an INFINITI retailer for installation of electrical equipment. The Supplemental Restraint System (SRS) wiring harnesses* should not be modified or disconnected. Unauthorized electrical test equipment and probing devices should not be used on the side-impact air bag system.**

* **The SRS wiring harness connectors are yellow and orange for easy identification.**

When selling your vehicle, we request that you inform the buyer about the side air bag and curtain air bag systems and guide the buyer to the appropriate sections in this Owner's Manual.

SEAT BELTS WITH PRETENSIONERS (front seats)

WARNING

- **The pretensioners cannot be reused after activation. They must be replaced together with the retractor and buckle as a unit.**
- **If the vehicle becomes involved in a collision but a pretensioner is not activated, be sure to have the pretensioner system checked and, if necessary, replaced. It is recommended you visit an INFINITI retailer for this service.**
- **No unauthorized changes should be made to any components or wiring of the pretensioners. This is to prevent damage to or accidental activation of the pretensioner system. Tampering with the pretensioner system may result in serious personal injury.**
- **It is recommended you visit an INFINITI retailer for work on and around the pretensioner system. It is also recommended you visit an INFINITI retailer for installation of electrical equipment. Unauthorized electrical test equipment and probing devices should not be used on the pretensioner system.**
- **If you need to dispose of the pretensioner or scrap the vehicle, it is recommended you visit an INFINITI retailer for this service. Correct pretensioner disposal procedures are set forth in the appropriate INFINITI Service Manual. Incorrect disposal procedures could cause personal injury.**
- **If there is an impact to your vehicle from any direction, your Occupant Classification Sensor (OCS) should be checked. It is recommended an INFINITI retailer performs this service to verify it is still functioning correctly. The OCS should be checked even if no air bags deploy as a result of the impact. Failure to verify proper OCS function may result in an improper air bag deployment resulting in injury or death.**

The pretensioner system may activate with the supplemental air bag system in certain types of collisions. Working with the seat belt retractor, it helps tighten the seat belt when the vehicle becomes involved in certain types of collisions, helping to restrain front seat occupants.

The pretensioner is encased with the seat belt retractor. These seat belts are used the same way as conventional seat belts.

When a pretensioner seat belt activates, smoke is released and a loud noise may be heard. The smoke is not harmful, and it does not indicate a fire. Care should be taken not to inhale it as it may cause irritation and choking. Those with a history of a breathing condition should get fresh air promptly.

After pretensioner activation, load limiters allow the seat belt to release webbing (if necessary) to reduce forces against the chest.

The supplemental air bag warning light is used to indicate malfunctions in the pretensioner system. (See "Supplemental air bag warning light" (P.1-55) for more details.) If the operation of the supplemental air bag warning light indicates there is a malfunction, have the system checked. It is recommended you visit an INFINITI retailer for this service.

When selling your vehicle, we request that you inform the buyer about the seat belt pretensioners and guide the buyer to the appropriate sections in this Owner's Manual.

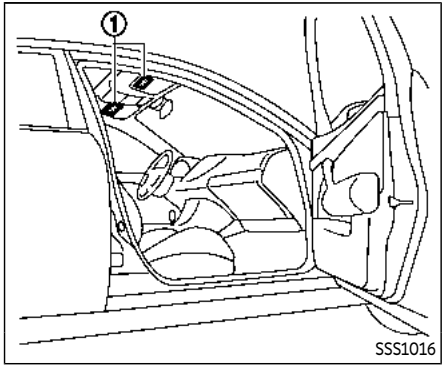

SUPPLEMENTAL AIR BAG WARNING LABELS

Warning labels about the supplemental front-impact air bag systems are placed in the vehicle as shown in the illustration.

SRS air bag

The warning labels ① are located on the surface of the sun visors.

WARNING

Do not use a rear-facing child restraint on a seat protected by an air bag in front of it. If the air bag deploys, it may cause serious injury or death.

SUPPLEMENTAL AIR BAG WARNING LIGHT

The supplemental air bag warning light, displaying in the instrument panel, monitors the circuits for the air bag systems, pretensioners and all related wiring.

When the ignition switch is in the ON position, the supplemental air bag warning light illuminates for about 7 seconds and then turns off. This means the SRS air bag systems are operational.

If any of the following conditions occur, the air bag and/or pretensioner systems need servicing:

- The supplemental air bag warning light remains on after approximately 7 seconds.
- The supplemental air bag warning light flashes intermittently.
- The supplemental air bag warning light does not come on at all.

Under these conditions, the air bag or pretensioner systems may not operate properly. They must be checked and repaired. It is recommended you visit an INFINITI retailer for this service.

WARNING

If the supplemental air bag warning light is on, it could mean that the front air bag, side air bag, curtain air bag and/or pretensioner systems will not operate in an accident. To help avoid injury to yourself or others, have your vehicle checked as soon as possible. It is recommended you visit an INFINITI retailer for this service.

REPAIR AND REPLACEMENT PROCEDURE

The front air bags, side air bags, curtain air bags and pretensioners are designed to activate on a one-time-only basis. As a reminder, unless it is damaged, the supplemental air bag warning light will remain illuminated after inflation has occurred. These systems should be repaired and/or replaced as soon as possible. It is recommended you visit an INFINITI retailer for this service.

When maintenance work is required on the vehicle, the front air bags, side air bags, curtain air bags, pretensioners and related parts should be pointed out to the person conducting the maintenance. The ignition switch should always be in the LOCK position when working under the hood or inside the vehicle.

WARNING

- **Once a front air bag, side air bag, or curtain air bag has inflated, the air bag module will not function again and must be replaced. Additionally, the activated pretensioner must also be replaced. The air bag module and pretensioner should be replaced. It is recommended you visit an INFINITI retailer for this service. However, the air bag module and pretensioner system cannot be repaired.**
- **The front air bag, side air bag, curtain air bag and the pretensioner system should be inspected if there is any damage to the front end or side portion of the vehicle. It is recommended you visit an INFINITI retailer for this service.**
- **If you need to dispose of the supplemental air bag or pretensioner or scrap the vehicle, it is recommended you visit an INFINITI retailer. Correct supplemental air bag and seat belt pretensioner system disposal procedures are set forth in the appropriate INFINITI Service Manual. Incorrect disposal procedures could cause personal injury.**
- **If there is an impact to your vehicle from any direction, your Occupant Classification Sensor (OCS) should be checked by an INFINITI retailer to verify it is still functioning correctly. The OCS should be checked even if no air bags deploy as a result of the impact. Failure to verify proper OCS function may result in an improper air bag deployment resulting in injury or**

death.

MEMO

2 Instruments and controls

Cockpit 2-3
Instrument panel 2-5
Meters and gauges 2-6
Speedometer and odometer 2-7
Tachometer 2-8
Engine coolant temperature gauge 2-8
Fuel gauge 2-9
Compass (if so equipped) 2-9
Zone variation change procedure 2-11
Warning lights, indicator lights and audible reminders 2-12
Checking lights 2-12
Warning lights 2-12
Indicator lights 2-18
Audible reminders 2-19
Vehicle information display 2-20
Indicators for operation 2-23
Indicators for maintenance 2-26
Trip computer 2-29
Clock and outside air temperature 2-31
Security systems 2-32
Vehicle Security System 2-32
INFINITI Vehicle Immobilizer System 2-33
Wiper and washer switch 2-34
Rain-sensing auto wiper system (if so equipped) 2-36
Rear window and outside mirror defroster switch 2-37
Headlight and turn signal switch 2-38
Headlight switch 2-38
Turn signal switch 2-43
Fog light switch 2-44
Horn 2-44
Vehicle Dynamic Control (VDC) OFF switch 2-45
Heated seats (if so equipped) 2-45
Operation with switch 2-46
Operation with touch screen 2-46
AUTO mode setting 2-46
Heated steering wheel (if so equipped) 2-47
Power outlets 2-47
Storage 2-48
Cup holders 2-48
Soft bottle holder 2-49
Sunglasses holder 2-49
Glove box 2-50
Console box 2-50

Card holder 2-51
Storage box 2-51
Coat hooks 2-51
Trunk hooks 2-52
Windows 2-52
Power windows 2-52
Moonroof (if so equipped) 2-55
Power moonroof 2-55
Interior lights 2-57
Map lights 2-57
Console light (if so equipped) 2-57
Interior light control switch 2-57
Vanity mirror lights 2-58
Trunk light 2-59
Courtesy light 2-59
HomeLink® Universal Transceiver (if so equipped) 2-59
Programming HomeLink® 2-60
Programming HomeLink® for Canadian customers and gate openers 2-61
Operating the HomeLink® Universal Transceiver 2-62
Programming troubleshooting 2-62
Clearing the programmed information 2-62
Reprogramming a single HomeLink® button 2-62
If your vehicle is stolen 2-63

COCKPIT

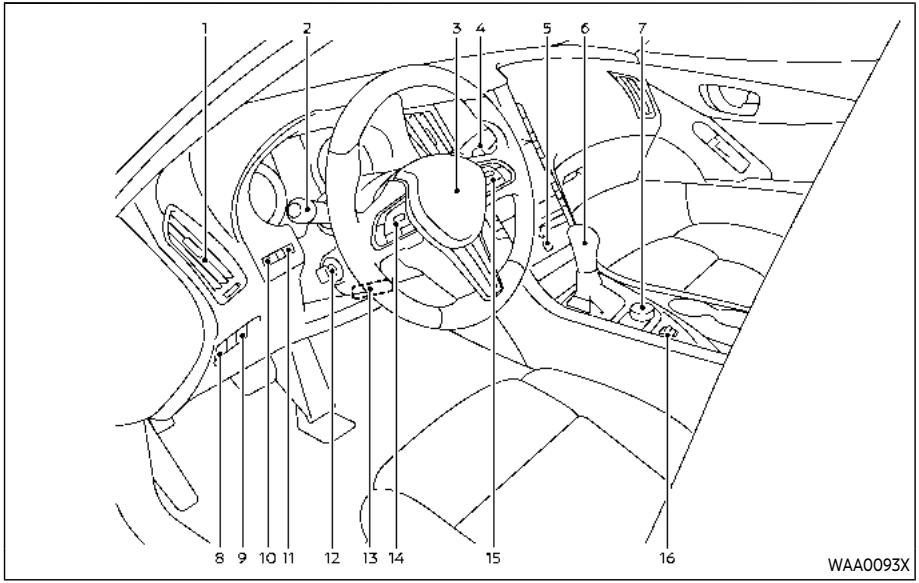

1. Side ventilator (P.4-34)
2. Headlight, fog light and turn signal switch (P.2-38)
3. Steering wheel
   – Horn (P.2-44)
   – Driver supplemental air bag (P.1-38)
   – Heated steering wheel (if so equipped) (P.2-47)
   – Power steering (P.5-124)
4. Windshield wiper and washer switch (P.2-34)
5. Hazard warning flasher switch (P.6-2)
6. Shift lever (P.5-16)
7. INFINITI controller*
8. Vehicle Dynamic Control (VDC) OFF switch (P.2-45, P.5-129)
9. Trunk lid release switch (P.3-23)
10. Instrument brightness control switch (P.2-43)
11. TRIP/RESET switch for twin trip odometer (P.2-7)
12. Electric tilting/telescopic steering wheel switch (P.3-27)
13. Manual tilting/telescopic steering wheel lever (P.3-27)
14. Steering-wheel-mounted controls (left side)
    – Audio control steering switch*
    – Hands-Free Phone System switch*
    – Voice recognition system switch*
15. Steering-wheel-mounted controls (right side)
    – Trip computer switch (P.2-29)
    – Cruise control switches (if so equipped) (P.5-66)
    – Intelligent Cruise Control (ICC) switches (if so equipped) (P.5-68)
    – Dynamic driver assistance switch (if so equipped) (P. 5-25, P.5-45, P.5-89)
16. INFINITI Drive Mode Selector (P.5-21)

*: Refer to the INFINITI InTouch™ Owner's Manual.

INSTRUMENT PANEL

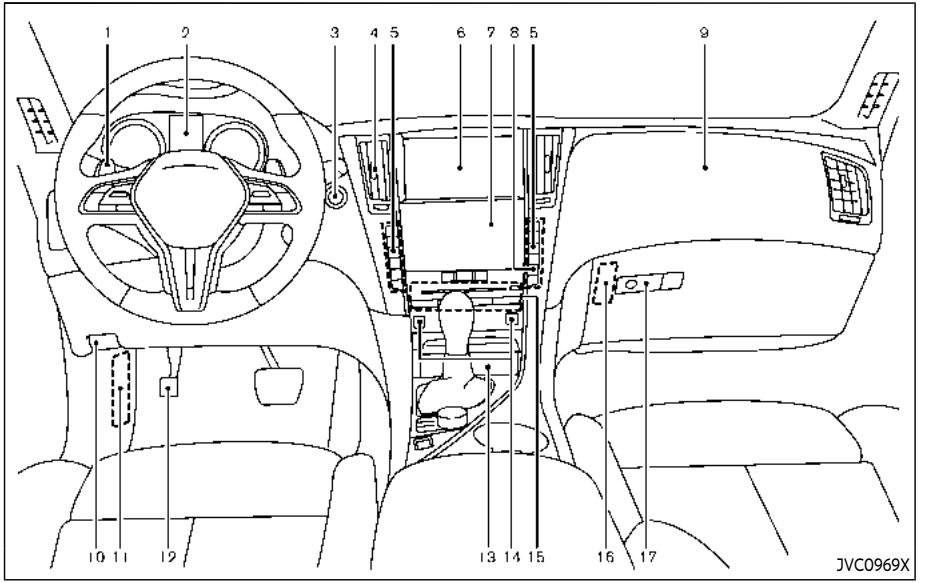

1. Paddle shifter (if so equipped) (P.5-18)
2. Meters and gauges (P.2-6)
   – Clock (P.2-31)
3. Push-button ignition switch (P.5-11)
4. Center ventilator (P.4-34)
5. Heater and air conditioner control (P.4-34)
6. Upper touch screen display* (upper display) and Navigation system* (if so equipped)
   – RearView Monitor (if so equipped) (P.4-3)
   – Around View® Monitor (if so equipped) (P.4-11)
7. Lower touch screen display* (lower display)
8. Rear window and outside mirror defroster switch (P.2-37)
9. Front passenger supplemental air bag (P.1-38)
10. Hood release handle (P.3-22)
11. Fuse box cover (P.8-17)
12. Parking brake (P.5-20)
13. Storage box (P.2-51) and power outlet (P.2-47)
14. Seat heater switch (if so equipped) (P.2-45)
15. Audio system*
16. Trunk release power cancel switch (P.3-24)
17. Glove box (P.2-50)

*: Refer to the INFINITI InTouch™ Owner's Manual.

METERS AND GAUGES

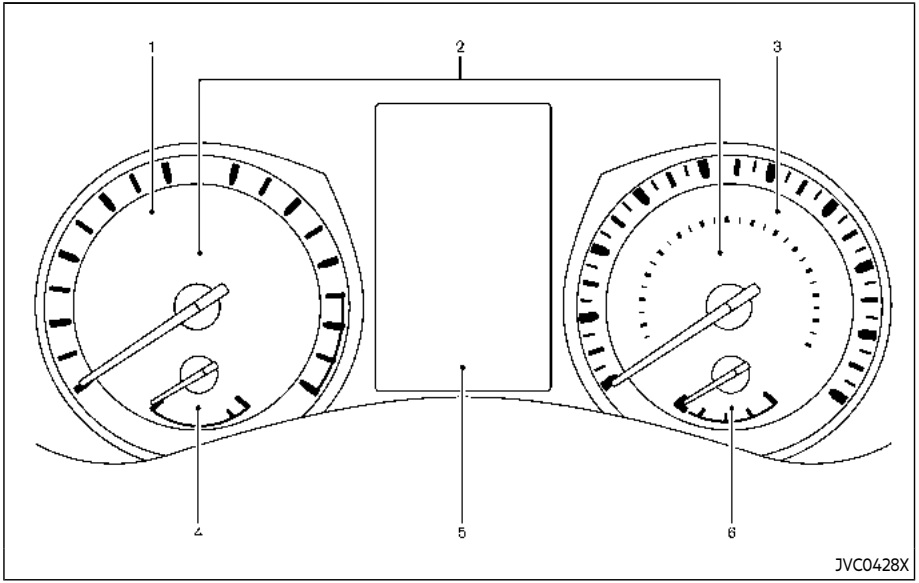

1. Tachometer* (P.2-8)
2. Warning and indicator lights (P.2-12)
3. Speedometer* (P.2-7)
4. Engine coolant temperature gauge* (P.2-8)
5. Vehicle information display (P.2-20)/ Odometer/twin trip odometer (P.2-7)
6. Fuel gauge* (P.2-9)

***: The needle indicators may move slightly after the ignition switch is placed in the OFF position. This is not a malfunction.**

CAUTION

- **For cleaning, use a soft cloth, dampened with water. Never use a rough cloth, alcohol, benzine, thinner or any kind of solvent or paper towel with a chemical cleaning agent. They will scratch or cause discoloration to the lens.**
- **Do not spray any liquid such as water on the meter lens. Spraying liquid may cause the system to malfunction.**

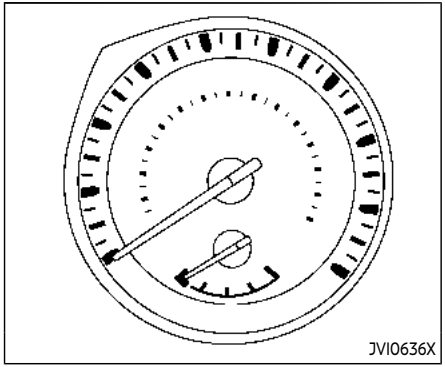

Speedometer

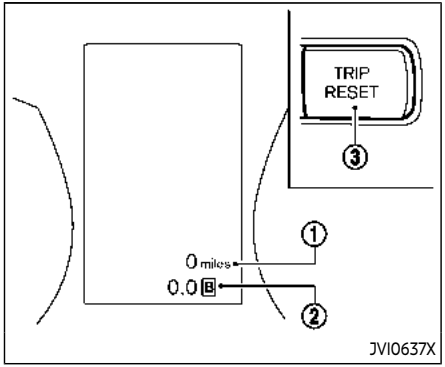

Odometer/twin trip odometer

SPEEDOMETER AND ODOMETER

Speedometer

The speedometer indicates vehicle speed in miles per hour (MPH) and kilometers per hour (km/h).

Odometer/twin trip odometer

The odometer ① and twin trip odometer ② are displayed in the vehicle information display when the ignition switch is in the ON position.

The odometer records the total distance the vehicle has been driven.

The twin trip odometer records the distance of individual trips.

Changing the display:

Pushing the TRIP RESET switch ③ under the combination meter panel changes the display as follows:

TRIP A → TRIP B → TRIP A

Resetting the trip odometer:

Pushing the TRIP RESET switch ③ for more than 1 second resets the trip odometer to zero.

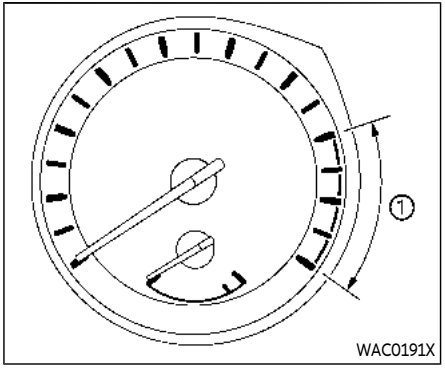

TACHOMETER

The tachometer indicates engine speed in revolutions per minute (RPM). **Do not rev the engine into the red zone ①.**

CAUTION

When engine speed approaches the red zone, shift to a higher gear or reduce engine speed. Operating the engine in the red zone may cause serious engine damage.

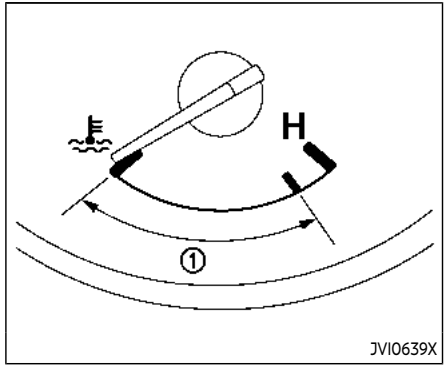

ENGINE COOLANT TEMPERATURE GAUGE

The gauge indicates the engine coolant temperature.

The engine coolant temperature is within the normal range when the gauge needle points within the zone ① shown in the illustration.

The engine coolant temperature varies with the outside air temperature and driving conditions.

CAUTION

If the gauge indicates the engine coolant temperature is near the hot (H) end of the normal range, reduce vehicle speed to decrease the temperature. If the gauge is over the normal range, stop the vehicle as soon as safely possible and let the engine idle. If the engine is overheated, continued operation of the vehicle may seriously damage the engine. See "If your vehicle overheats" (P.6-13) for immediate action required.

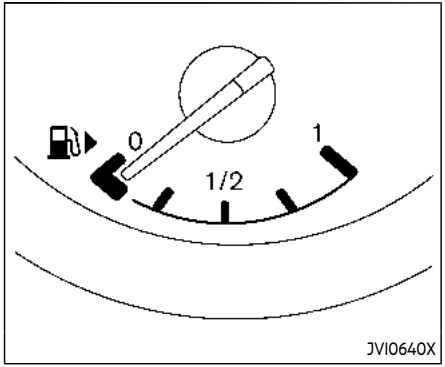

FUEL GAUGE

The gauge indicates the **approximate** fuel level in the tank.

The gauge may move slightly during braking, turning, acceleration, or going up or down hills.

The gauge needle returns to "0" (Empty) after the ignition switch is placed in the OFF position.

Refill the fuel tank before the gauge registers "0" (Empty).

The low fuel warning light illuminates on the meter when the fuel level is getting low. Refuel as soon as it is convenient, preferably before the gauge reaches "0". There will be a small reserve of fuel in the tank when the fuel gauge needle reaches "0".

The indicates that the fuel-filler door is located on the right side of the vehicle.

CAUTION

- **If the vehicle runs out of fuel, the malfunction indicator light (MIL) may come on. Refuel as soon as possible. After a few driving trips, the light should turn off. If the light remains on after a few driving trips, have the vehicle inspected. It is recommended you visit an INFINITI retailer for this service.**
- **For additional information, see "Malfunction Indicator Light (MIL)" (P.2-18).**

COMPASS (if so equipped)

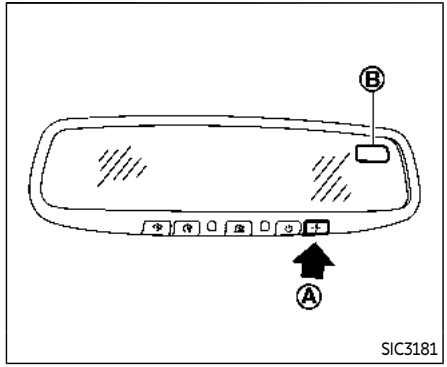

When the ignition switch is pushed to the ON position, the compass display Ⓑ will indicate the direction of the vehicle's heading.

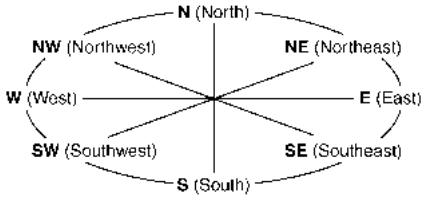

If the display reads "C", calibrate the compass by driving the vehicle in 3 complete circles at less than 5 MPH (8 km/h). You can also calibrate the compass by driving your

vehicle on your everyday route. The compass will be calibrated once it has tracked 3 complete circles.

To turn on and off the compass manually, push the -⊛- switch Ⓐ while the ignition switch is in the ON position.

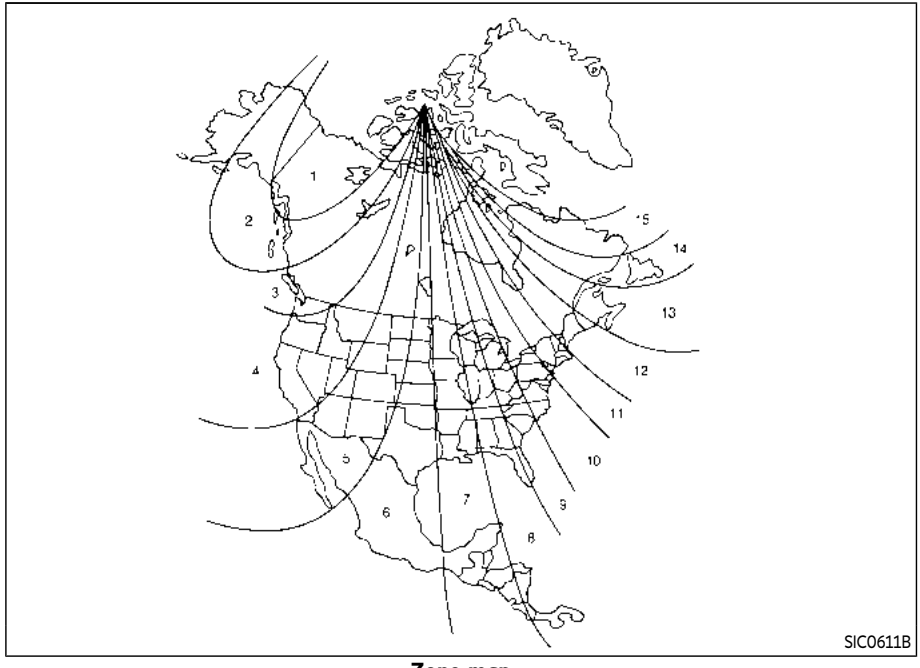

Zone map

ZONE VARIATION CHANGE PROCEDURE

The difference between magnetic north and geographical north is known as variance. In some areas, this difference can sometimes be great enough to cause false compass readings. Follow these instructions to set the variance for your particular location if this happens:

1. Push the -⊛- switch for more than 3 seconds. The current zone number will appear in the display.
2. Find your current location and variance number on the zone map.
3. Push the -⊛- switch repeatedly until the new zone number appears in the display, then release the switch. After you release the switch, the display will show a compass direction within a few seconds.
   - If the compass deviates from the correct indication soon after repeated adjustment, it is recommended you have the compass checked at an INFINITI retailer.
   - The compass may not indicate the correct compass point in tunnels or while driving up or down a steep hill.

     (The compass returns to the correct compass point when the vehicle moves to an area where the geomagnetism is stabilized.)

CAUTION

- **Do not install a ski rack, antenna, etc., which are attached to the vehicle by means of a magnet. They affect the operation of the compass.**
- **When cleaning the mirror, use a paper towel or similar material dampened with glass cleaner. Do not spray glass cleaner directly on the mirror as it may cause the liquid cleaner to enter the mirror housing.**

WARNING LIGHTS, INDICATOR LIGHTS AND AUDIBLE REMINDERS

ABS	Anti-lock Braking System (ABS) warning light		Power steering warning light		High beam assist indicator light (if so equipped)
BRAKE	Brake warning light		Seat belt warning light and chime		High beam indicator light
			Supplemental air bag warning light		Malfunction Indicator Light (MIL)
	Charge warning light		Vehicle Dynamic Control (VDC) warning light		Security indicator light
	Forward Emergency Braking (FEB) system warning light (if so equipped)	ECO	ECO drive indicator light		Turn signal/hazard indicator lights
	Low fuel warning light		Exterior light indicator	OFF	Vehicle Dynamic Control (VDC) off indicator light
	Low tire pressure warning light		Front fog light indicator light		
	Master warning light	OFF	Front passenger air bag status light		

CHECKING LIGHTS

With all doors closed, apply the parking brake, fasten the seat belts and place the ignition switch in the ON position without starting the engine. The following lights (if so equipped) will come on:

, BRAKE or , , , ,

The following lights (if so equipped) will come on briefly and then go off:

, ABS or , , , , , ECO

If any light does not come on or operates in a way other than described, it may indicate a burned-out bulb and/or a system malfunction. It is recommended you have the system checked by an INFINITI retailer.

Some indicators and warnings are also displayed in the vehicle information display between the speedometer and tachometer. (See “Vehicle information display” (P.2-20).)

WARNING LIGHTS

ABS or Anti-lock Braking System (ABS) warning light

When the ignition switch is in the ON position, the Anti-lock Braking System (ABS) warning light illuminates and then turns off. This indicates the ABS is operational.

If the ABS warning light illuminates while the engine is running, or while driving, it may indicate the ABS is not functioning properly. Have the system checked. It is recommended

you visit an INFINITI retailer for this service.

If an ABS malfunction occurs, the anti-lock function is turned off. The brake system then operates normally, but without anti-lock assistance. (See "Brake system" (P.5-126).)

BRAKE or (!) Brake warning light

This light functions for both the parking brake and the foot brake systems.

Parking brake indicator:

When the ignition switch is in the ON position, the light comes on when the parking brake is applied.

Low brake fluid warning light:

When the ignition switch is in the ON position, the light warns of a low brake fluid level. If the light comes on while the engine is running with the parking brake not applied, stop the vehicle and perform the following:

1. Check the brake fluid level. If brake fluid is necessary, add fluid and have the system checked. It is recommended you have this service performed by an INFINITI retailer. (See "Brake fluid" (P.8-9).)
2. If the brake fluid level is correct, have the warning system checked. It is recommended you have this service performed by an INFINITI retailer.

Anti-lock Braking System (ABS) warning indicator:

When the parking brake is released and the brake fluid level is sufficient, if both the brake warning light and the Anti-lock Braking System (ABS) warning light illuminate, it may indicate the ABS is not functioning properly. Have the brake system checked, and if necessary repaired. It is recommended you visit an INFINITI retailer for this service. (See "Anti-lock Braking System (ABS) warning light" (P.2-12).)

WARNING

- **Your brake system may not be working properly if the warning light is on. Driving could be dangerous. If you judge it to be safe, drive carefully to the nearest service station for repairs. Otherwise, have your vehicle towed because driving it could be dangerous.**
- **Pressing the brake pedal with the engine stopped and/or low brake fluid level may increase your stopping distance and braking will require greater pedal effort as well as pedal travel.**
- **If the brake fluid level is below the minimum or MIN mark on the brake fluid reservoir, do not drive until the brake system has been checked. It is recommended you visit an INFINITI retailer for this service.**

Charge warning light

If the light comes on while the engine is running, it may indicate the charging system is not functioning properly. Turn the engine off and check the alternator belt. If the belt is loose, broken, missing or if the light remains on, have your vehicle serviced immediately. It is recommended you visit an INFINITI retailer for this service.

CAUTION

Do not continue driving if the alternator belt is loose, broken or missing.

Forward Emergency Braking (FEB) system warning light (if so equipped)

This light comes on when the ignition switch is placed in the ON position. It turns off after the engine is started.

This light illuminates when the FEB with pedestrian detection system is set to OFF on the lower display.

If the light illuminates when the FEB with pedestrian detection system is ON, it may indicate that the system is unavailable. See "Forward Emergency Braking (FEB) with pedestrian detection system" (P.5-100) for more details.

Low fuel warning light

This light illuminates when the fuel in the tank is getting low. Refuel as soon as it is convenient, preferably before the fuel gauge reaches the 0 (empty) position.

There will be a small reserve of fuel remaining in the tank when the fuel gauge reaches the 0 position.

Low tire pressure warning light

Your vehicle is equipped with a Tire Pressure Monitoring System (TPMS) that monitors the tire pressure of all tires except the spare tire (if so equipped).

The low tire pressure warning light warns of low tire pressure and flat tire (if so equipped) or indicates that the TPMS is not functioning properly.

After the ignition switch is placed in the ON position, this light illuminates for about 1 second and turns off.

Low tire pressure warning:

If the vehicle is being driven with low tire pressure, the warning light will illuminate. The "Tire Pressure Low - Add Air" warning also appears in the vehicle information display.

When the low tire pressure warning light illuminates, you should stop and adjust the tire pressure to the recommended COLD tire pressure shown on the Tire and Loading Information label. The low tire pressure warning light does not automatically turn off when the tire pressure is adjusted. After the tire is inflated to the recommended pressure, the vehicle must be driven at speeds above 16 MPH (25 km/h) to activate the TPMS and turn off the low tire pressure warning light. Use a tire pressure gauge to check the tire pressure.

The "Tire Pressure Low - Add Air" warning is active as long as the low tire pressure warning light remains illuminated.

For additional information, see "Vehicle information display" (P.2-20), "Tire Pressure Monitoring System (TPMS)" (P.5-5) and "Tire Pressure Monitoring System (TPMS)" (P.6-3).

Flat tire warning (if so equipped):

The flat tire warning warns of a flat tire.

If the vehicle is being driven with one or more flat tires, the low tire pressure warning light will illuminate continuously and a chime will sound for 10 seconds. A "Flat Tire - Visit dealer" warning also appears in the vehicle information display.

The chime will only sound at the first indication of a flat tire and the warning light will illuminate continuously. When the flat tire warning is activated, have the system reset and the tire checked, and replaced if necessary. It is recommended you visit an INFINITI retailer for these services. Even if the tire is inflated to the specified COLD tire pressure, the warning light will continue to illuminate until the system is reset by an INFINITI retailer.

Your vehicle can be driven for a limited time on a flat tire. See "Run-flat tires" (P.6-4).

TPMS malfunction:

If the TPMS is not functioning properly, the low tire pressure warning light will flash for approximately 1 minute when the ignition switch is placed in the ON position. The light will remain on after the 1 minute. Have the system checked. It is recommended you visit an INFINITI retailer for this service. The "Tire Pressure Low - Add Air" warning does not

appear if the low tire pressure warning light illuminates to indicate a TPMS malfunction.

For additional information, see "Tire Pressure Monitoring System (TPMS)" (P.5-5).

WARNING

- **Radio waves could adversely affect electric medical equipment. Those who use a pacemaker should contact the electric medical equipment manufacturer for the possible influences before use.**
- **If the light does not illuminate with the ignition switch pushed ON, have the vehicle checked as soon as possible. It is recommended you visit an INFINITI retailer for this service.**
- **If the light illuminates while driving, avoid sudden steering maneuvers or abrupt braking, reduce vehicle speed, pull off the road to a safe location and stop the vehicle as soon as possible. Driving with under-inflated tires may permanently damage the tires and increase the likelihood of tire failure. Serious vehicle damage could occur and may lead to an accident and could result in serious personal injury. Check the tire pressure for all four tires. Adjust the tire pressure to the recommended COLD tire pressure shown on the Tire and Loading Information label to turn the low tire pressure warning light OFF. If the light still illuminates while driving after adjusting the tire pressure, a tire may be flat or the TPMS may be malfunctioning. If you have a flat tire, replace it with a spare tire (if so equipped) or repair it with the emergency tire puncture repair kit (if so equipped) as soon as possible. If no tire is flat and all tires are properly inflated, it is recommended you consult an INFINITI retailer.**
- **For models with run-flat tires, although you can continue driving with a punctured run-flat tire, remember that vehicle handling stability is reduced, which could lead to an accident and personal injury. Also, driving a long distance at high speeds may damage the tires.**
  - **Do not drive at speeds above 50 MPH (80 km/h) and do not drive more than approximately 93 miles (150 km) with a punctured run-flat tire. The actual distance the vehicle can be driven on a flat tire depends on outside temperature, vehicle load, road conditions and other factors.**
  - **If you detect any unusual sounds or vibrations while driving with a punctured run-flat tire, pull off the road to a safe location and stop the vehicle as soon as possible. The tire may be seriously damaged and need to be replaced.**
- **Since the spare tire is not equipped with the TPMS, when a spare tire is mounted or a wheel is replaced, the TPMS will not function and the low tire pressure warning light will flash for approximately 1 minute. The light will remain on after the 1 minute. Have your tires replaced and/or TPMS system reset as soon as possible. It is recommended you visit an INFINITI retailer for these services.**
- **Replacing tires with those not originally specified by INFINITI could affect the proper operation of the TPMS.**

CAUTION

- **The TPMS is not a substitute for the regular tire pressure check. Be sure to check the tire pressure regularly.**
- **If the vehicle is being driven at speeds of less than 16 MPH (25 km/h), the**

TPMS may not operate correctly.

- **Be sure to install the specified size of tires to the four wheels correctly.**

Master warning light

When the ignition switch is in the ON position, the master warning light illuminates if any of the following warnings appear in the vehicle information display:

- No key warning
- PUSH warning
- Key ID Incorrect warning
- Low washer fluid warning
- Door/trunk open warning
- Loose fuel cap warning
- Tire Pressure Low - Add Air warning
- Flat Tire - Visit dealer warning (if so equipped)
- All-Wheel Drive (AWD) warning (if so equipped)
- Adaptive Front lighting System (AFS) warning (if so equipped)
- Intelligent Key system warning
- Chassis control warning
- Parking brake release warning
- SHIFT "P" warning
- Low oil pressure warning

See "Vehicle information display" (P.2-20).

If the driver assist system warnings appear in the vehicle information display, the master warning light also illuminates. See "Lane Departure Warning (LDW) system" (P.5-33), "Blind Spot Warning (BSW)" (P.5-37), "Blind Spot Intervention® (BSI)" (P.5-45), "Back-up Collision Intervention (BCI)" (P.5-57), "Distance Control Assist (DCA)" (P.5-89), "Forward Emergency Braking (FEB) with pedestrian detection system" (P.5-100) and "Predictive Forward Collision Warning (PFCW)" (P.5-110).

Power steering warning light

Models with Direct Adaptive Steering :

When the ignition switch is in the ON position, the power steering warning light illuminates. After starting the engine, the power steering warning light stays on for a few seconds and turns off. This indicates that Direct Adaptive Steering is operational. Drive the vehicle after the power steering warning light turns off.

If the power steering warning light illuminates while driving, pull off the road to a safe location and stop the vehicle. If the power steering warning light turns off, you can drive again. If the power steering warning light continues to illuminate, it is recommended you have Direct Adaptive Steering checked by an INFINITI retailer. (See "Direct Adaptive Steering type" (P.5-124).)

Models with electric power steering :

When the ignition switch is in the ON position, the power steering warning light illuminates. After starting the engine, the power steering warning light turns off. This indicates the electric power steering is operational.

If the power steering warning light illuminates while the engine is running, it may indicate the electric power steering is not functioning properly and may need servicing. It is recommended you have the electric power steering checked by an INFINITI retailer.

When the power steering warning light illuminates with the engine running, the power assist to the steering will cease operation but you will still have control of the vehicle. At this time, greater steering efforts are required to operate the steering wheel, especially in sharp turns and at low speeds.

See "Electric power steering type" (P.5-124).

Seat belt warning light and chime

The light and chime remind you to fasten seat belts. The light illuminates whenever the ignition switch is pushed to the ON position, and will remain illuminated until the driver's seat belt is fastened. At the same time, the chime will sound for about 6 seconds unless the driver's seat belt is securely fastened.

The seat belt warning light for the front passenger will illuminate if the seat belt is not fastened when the front passenger's seat is occupied.

See "Seat belts" (P.1-11) for precautions on seat belt usage.

Supplemental air bag warning light

After pushing the ignition switch to the ON position, the supplemental air bag warning light will illuminate. The supplemental air bag warning light will turn off after about 7 seconds if the supplemental front air bag and supplemental side air bag, curtain side-impact air bag systems and/or pretensioner seat belt are operational.

If any of the following conditions occur, the supplemental front air bag, supplemental side air bag, supplemental curtain side-impact air bag and pretensioner seat belt needs servicing.

- The supplemental air bag warning light remains on after approximately 7 seconds.
- The supplemental air bag warning light flashes intermittently.
- The supplemental air bag warning light does not come on at all.

It is recommended you visit an INFINITI retailer for these services.

Unless checked and repaired, the Supplemental Restraint Systems and/or the pretensioner seat belt may not function properly.

For additional information, see "Supplemental restraint system" (P.1-38).

WARNING

If the supplemental air bag warning light is on, it could mean that the supplemental front air bag, supplemental side air bag, curtain side-impact air bag systems and/or pretensioner seat belt will not operate in an accident. To help avoid injury to yourself or others, have your vehicle checked. It is recommended you visit an INFINITI retailer for this service.

Vehicle Dynamic Control (VDC) warning light

When the ignition switch is in the ON position, the Vehicle Dynamic Control (VDC) warning light illuminates and then turns off.

The light will blink when the VDC system or the traction control system is operating, thus alerting the driver that the vehicle is nearing its traction limits. The road surface may be slippery.

When the VDC warning light illuminates when the VDC system is turned on, this light alerts the driver to the fact that the VDC system's fail-safe mode is operating, for example the VDC, active trace control function, Brake Force Distribution or hill start assist system may not be functioning properly. Have the system checked. It is recommended you visit an INFINITI retailer for this service. If a malfunction occurs in the system, the VDC system function will be canceled but the vehicle is still driveable. For additional information, see "Vehicle Dynamic Control (VDC) system" (P.5-129).

INDICATOR LIGHTS

ECO ECO drive indicator light

When the ignition switch is placed in the ON position, the light will come on and then turn off.

When the INFINITI Drive Mode Selector is turned to the ECO mode, the ECO drive indicator light will illuminate, blink or remain off depending on the accelerator pedal operation to help assist the driver to drive economically. For more details, see "ECO mode" (P.5-22).

Exterior light indicator

This indicator illuminates when the headlight switch is turned to the AUTO, or position and the exterior lights (such as front parking lights, headlights, etc.) are on. The indicator turns off when these lights are turned off.

Front fog light indicator light

The front fog light indicator light illuminates when the front fog lights are on. (See "Fog light switch" (P.2-44).)

Front passenger air bag status light

The front passenger air bag status light ( ) located on the instrument panel will be lit and the passenger front air bag will be OFF depending on how the front passenger seat is being used.

For front passenger air bag status light operation, see "INFINITI Advanced Air Bag System (front seats)" (P.1-44).

High beam assist indicator light (if so equipped)

The indicator light illuminates when the headlights come on while the headlight switch is in the AUTO position with the high beam selected. This indicates that the high beam assist system is operational. (See "High beam assist" (P.2-39).)

High beam indicator light

This light comes on when the headlight high beam is on and goes out when the low beam is selected.

Malfunction Indicator Light (MIL)

If the malfunction indicator light comes on steady or blinks while the engine is running, it may indicate a potential emission control malfunction.

The malfunction indicator light may also come on steady if the fuel-filler cap is loose or missing, or if the vehicle runs out of fuel. Check to make sure the fuel-filler cap is installed and closed tightly, and that the vehicle has at least 3 US gallons (11.4 liters) of fuel in the fuel tank.

After a few driving trips, the light should turn off if no other potential emission control system malfunction exists.

If this indicator light remains on for 20 seconds and then blinks for 10 seconds when the engine is not running, it indicates that the vehicle is not ready for an emission control system inspection/maintenance test. (See "Readiness for Inspection/Maintenance (I/M) test (US only)" (P.10-21).)

Operation:

The malfunction indicator light will come on in one of two ways:

- Malfunction indicator light on steady – An emission control system malfunction has been detected. Check the fuel-filler

cap if the Loose Fuel Cap warning appears in the vehicle information display. If the fuel-filler cap is loose or missing, tighten or install the cap and continue to drive the vehicle. The light should turn off after a few driving trips. If the light does not turn off after a few driving trips, have the vehicle inspected. It is recommended you visit an INFINITI retailer for this service. You do not need to have your vehicle towed to the retailer.

- Malfunction indicator light blinking – An engine misfire has been detected which may damage the emission control system.

  To reduce or avoid emission control system damage:

  1) Do not drive at speeds above 45 MPH (72 km/h).
  2) Avoid hard acceleration or deceleration.
  3) Avoid steep uphill grades.
  4) If possible, reduce the amount of cargo being hauled or towed.

  The malfunction indicator light may stop blinking and remain on.

  Have the vehicle inspected. It is recommended you visit an INFINITI retailer for this service. You do not need to have your vehicle towed to the retailer.

CAUTION

Continued vehicle operation without having the emission control system checked and repaired as necessary could lead to poor driveability, reduced fuel economy, and possible damage to the emission control system.

Security indicator light

The light blinks when the ignition switch is in the ACC, OFF or LOCK position. This function indicates the security system equipped on the vehicle is operational.

If the security system is malfunctioning, this light will remain on while the ignition switch is in the ON position. For additional information, see “Security systems” (P.2-32).

Turn signal/hazard indicator lights

The light flashes when the turn signal switch lever or hazard switch is turned on.

Vehicle Dynamic Control (VDC) off indicator light

When the ignition switch is placed in the ON position, the light will come on and then turn off.

The light comes on when the VDC off switch is pushed to OFF. This indicates that the VDC system and traction control system are not operating.

AUDIBLE REMINDERS

Key reminder chime

A chime will sound if the driver side door is opened while the ignition switch is pushed to the ACC position. Make sure the ignition switch is pushed to the OFF position, and take the Intelligent Key with you when leaving the vehicle.

Light reminder chime

A chime will sound when the driver side door is opened with the light switch in the or position and the ignition switch in the ACC, OFF or LOCK position.

Turn the light switch off when you leave the vehicle.

Parking brake reminder chime

The parking brake reminder chime will sound if the vehicle is driven at more than 4 MPH (7 km/h) with the parking brake applied. Stop the vehicle and release the parking brake.

Brake pad wear warning

The disc brake pads have audible wear warnings. When a brake pad requires replacement, it will make a high pitched scraping sound when the vehicle is in motion. This scraping sound will first occur only when the brake pedal is depressed. After more wear of the brake pad, the sound will always be heard even if the brake pedal is not depressed. Have the brakes checked as soon as possible if the warning sound is heard.

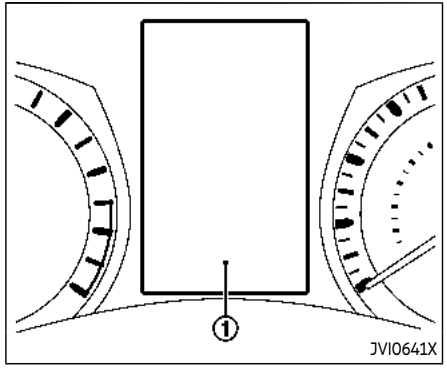

The vehicle information display ① is located between the tachometer and the speedometer, and it displays the warnings and information. The following items are also displayed if the vehicle is equipped with them:

- Automatic Transmission (AT)
  - "Driving the vehicle" (P.5-16)
- All-Wheel Drive (AWD)
  - "Intelligent All-Wheel Drive (AWD)" (P.5-121)
- Cruise control
  - "Cruise control" (P.5-66)
- Intelligent Cruise Control (ICC)
  - "Intelligent Cruise Control (ICC)" (P.5-68)
- Active Lane Control
  - "Active Lane Control" (P.5-25)
- Lane Departure Warning (LDW)
  - "Lane Departure Warning (LDW) system" (P.5-33)
- Blind Spot Warning (BSW)
  - "Blind Spot Warning (BSW)" (P.5-37)
- Blind Spot Intervention® (BSI)
  - "Blind Spot Intervention® (BSI)" (P.5-45)
- Back-up Collision Intervention (BCI)
  - "Back-up Collision Intervention (BCI)" (P.5-57)
- Distance Control Assist (DCA)
  - "Distance Control Assist (DCA)" (P.5-89)
- Forward Emergency Braking (FEB) with pedestrian detection system
  - "Forward Emergency Braking (FEB) with pedestrian detection system" (P.5-100)
- Predictive Forward Collision Warning (PFCW)
  - "Predictive Forward Collision Warning (PFCW)" (P.5-110)
- Active trace control
  - "Active trace control" (P.5-130)

- Intelligent Key system
  - "Intelligent Key system" (P.3-6)

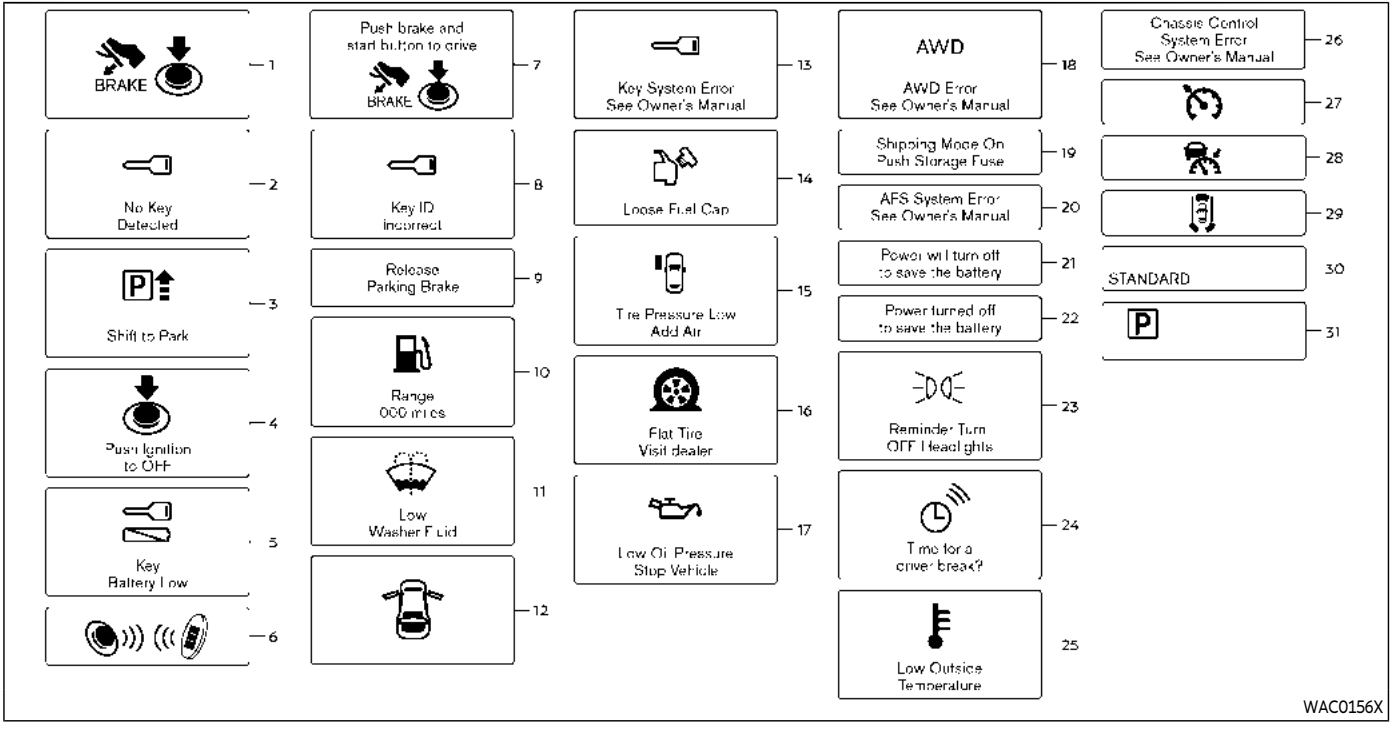
BRAKE
1
No Key
Detected
2
Shift to Park
3
Push Ignition
to OFF
4
Key
Battery Low
5
6
Push brake and
start button to drive
BRAKE
7
Key ID
incorrect
8
Release
Parking Brake
9
Range
000 miles
10
Low
Washer Fluid
11
12
Key System Error
See Owner's Manual
13
Loose Fuel Cap
14
Tire Pressure Low
Add Air
15
Flat Tire
Visit dealer
16
Low Oil Pressure
Stop Vehicle
17
AWD
AWD Error
See Owner's Manual
18
Shipping Mode On
Push Storage Fuse
19
AFS System Error
See Owner's Manual
20
Power will turn off
to save the battery
21
Power turned off
to save the battery
22
Reminder Turn
OFF Headlights
23
Time for a
driver break?
24
Low Outside
Temperature
25
Chassis Control
System Error
See Owner's Manual
26
27
28
29
STANDARD
30
P
31
WAC0156X

INDICATORS FOR OPERATION

1. Engine start operation indicator

This indicator appears when the shift lever is in the P (Park) position.

This indicator means that the engine will start by pushing the ignition switch with the brake pedal depressed. You can start the engine directly in any position of the ignition switch.

2. NO KEY warning

The warning appears when the door is closed with the Intelligent Key left outside the vehicle and the ignition switch in the ACC or ON position. Make sure that the Intelligent Key is inside the vehicle.

See “Intelligent Key system” (P.3-6) for more details.

3. SHIFT “P” warning

This warning appears when the ignition switch is pushed to stop the engine with the shift lever in any position except the P (Park) position.

If this warning appears, move the shift lever to the P (Park) position or push the ignition switch to the ON position.

An inside warning chime will also sound. (See “Troubleshooting guide” (P.3-14).)

4. “PUSH” warning

This warning appears when the shift lever is moved to the P (Park) position with the ignition switch in the ACC position after the SHIFT “P” warning appears.

To push the ignition switch to the OFF position, perform the following procedure:

- **SHIFT “P” warning** → (Move the shift lever to “P”) → **PUSH warning** → (Push the ignition switch → ignition switch position is turned to ON) → **PUSH warning** → (Push the ignition switch → ignition switch position is turned to OFF)

5. Intelligent Key battery discharge indicator

This indicator appears when the Intelligent Key battery is running out of power.

If this indicator appears, replace the battery with a new one. (See “Intelligent Key battery replacement” (P.8-19).)

6. Engine start operation for Intelligent Key system indicator

This indicator appears when the Intelligent Key battery is running out of power and when the Intelligent Key System and vehicle are not communicating normally.

If this indicator appears, touch the ignition switch with the Intelligent Key while depressing the brake pedal. (See “Intelligent Key battery discharge” (P.5-14).)

7. Remote engine start indicator (if so equipped)

This indicator appears when the engine has been started using the remote engine start function. To start the vehicle, depress the brake pedal and place the ignition switch in the ON position.

For more details, see “Remote engine start” (P.3-19).

8. Key ID Incorrect warning

This warning appears when the ignition switch is pushed from the LOCK position and the Intelligent Key cannot be recognized by the system. You cannot start the engine with an unregistered key. Use the registered Intelligent Key.

See “Intelligent Key system” (P.3-6).

9. Parking brake release warning

This warning appears when the vehicle speed is above 4 MPH (7 km/h) and the parking brake is applied.

10. Low fuel warning

This warning appears when the fuel level in the tank is getting low. Refuel as soon as it is convenient, preferably before the fuel gauge

reaches the empty (0) position.

There is a small reserve of fuel remaining in the tank when the fuel gauge reaches the empty (0) position.

11. Low washer fluid warning

This warning appears when the washer tank fluid is at a low level. Add washer fluid as necessary. (See "Window washer fluid" (P.8-10).)

12. Door/trunk open warning

This warning appears if any of the doors and/or the trunk lid are open or not closed securely. The vehicle icon indicates which door or the trunk lid is open on the display.

13. Intelligent Key system warning

This warning appears if there is a malfunction in the Intelligent Key system.

If this warning appears while the engine is stopped, the engine cannot be started. If this warning appears while the engine is running, the vehicle can be driven. However, in these cases, have the system checked as soon as possible. It is recommended you visit an INFINITI retailer for this service.

14. Loose Fuel Cap warning

This warning appears when the fuel-filler cap is not tightened correctly after the vehicle has been refueled. (See "Fuel-filler cap" (P.3-25).)

15. Tire Pressure Low - Add Air warning

This warning appears when the low tire pressure warning light in the meter illuminates and low tire pressure is detected. The warning appears each time the ignition switch is placed in the ON position as long as the low tire pressure warning light remains illuminated. If this warning appears, stop the vehicle and adjust the pressure to the recommended COLD tire pressure shown on the Tire and Loading Information label. (See "Low tire pressure warning light" (P.2-14) and "Tire Pressure Monitoring System (TPMS)" (P.5-5).)

16. Flat Tire - Visit dealer warning (if so equipped)

This warning appears when the low tire pressure warning light in the meter illuminates and one or more flat tires are detected while driving. A chime also sounds for approximately 10 seconds. (See "Low tire pressure warning light" (P.2-14) and "Tire Pressure Monitoring System (TPMS)" (P.5-5).)

17. Low oil pressure warning

This warning appears if low engine oil pressure is detected. If the warning appears during normal driving, pull off the road in a safe area, stop the engine immediately and call an INFINITI retailer or other authorized repair shop.

The low oil pressure warning is not designed to indicate a low oil level. Use the dipstick to check the oil level. (See "Engine oil" (P.8-6).)

18. All-Wheel Drive (AWD) warning (if so equipped)

This warning appears when the Intelligent All-Wheel Drive (AWD) system is not functioning properly while the engine is running. The displayed message will vary depending on the condition of the AWD system malfunction. (See "Intelligent All-Wheel Drive (AWD)" (P.5-121).)

19. Extended storage fuse warning (if so equipped)

This warning may appear if the extended storage fuse switch is not pushed in (switched on). When this warning appears, push in (switch on) the extended storage fuse switch to turn off the warning. For more information, see "Extended storage fuse switch" (P.8-19).

20. Adaptive Front lighting System (AFS) warning (if so equipped)

This warning appears when the Adaptive Front lighting System (AFS) is not functioning properly. It is recommended you have the system checked by an INFINITI retailer.

(See "Adaptive Front lighting System (AFS)" (P.2-42).)

21. Power will turn off to save the battery warning

This warning appears after a period of time if the shift lever has not moved from the "P" (Park) position with the ignition switch in the ACC or ON position.

22. Power turned off to save the battery warning

This warning appears after the ignition switch is automatically turned OFF to save the battery.

23. Light reminder warning

This warning appears when the driver side door is opened with the headlight switch is left ON and the ignition switch is placed in the ACC, OFF or LOCK position. Place the headlight switch to "OFF" or "AUTO" position. For additional information, see "Headlight and turn signal switch" (P.2-38).

24. "TIMER" indicator

This indicator appears when the set "TIMER" indicator activates. You can set the time for up to 6 hours in the [Alarms] under the [Settings] menu on the lower display. (See the INFINITI InTouch™ Owner's Manual.)

25. Low outside temperature warning

This warning appears if the outside temperature is below 37°F (3°C). The warning can be set not to be displayed in the [Alarms] under the [Settings] menu on the lower display. (See the INFINITI InTouch™ Owner's Manual.)

26. Chassis control warning

This warning appears if Active Lane Control (if so equipped), the active trace control system and/or chassis control are not functioning properly. It is recommended you have the system checked by an INFINITI retailer. (See "Active Lane Control" (P.5-25), "Active trace control" (P.5-130) and "Chassis control" (P.5-132).)

27. Cruise indicator

Models without Intelligent Cruise Control (ICC) system:

This indicator shows the cruise control system status. The status is shown by the color.

See "Cruise control" (P.5-66) for details.

Models with Intelligent Cruise Control (ICC) system:

This indicator shows the conventional (fixed speed) cruise control mode status. The status is shown by the color.

See "Conventional (fixed speed) cruise control mode" (P.5-85) for details.

28. Intelligent Cruise Control (ICC) system ON indicator (if so equipped)

This indicator shows the Intelligent Cruise Control (ICC) system status. The status is shown by the color. (See "Intelligent Cruise Control (ICC)" (P.5-68).)

29. Driver assist system indicator (if so equipped)

This indicator shows the status of the following systems.

- Lane Departure Warning (LDW)
- Blind Spot Warning (BSW)
- Blind Spot Intervention® (BSI)
- Distance Control Assist (DCA)
- Forward Emergency Braking (FEB) with pedestrian detection system

- Predictive Forward Collision Warning (PFCW)

For more details, see "Lane Departure Warning (LDW) system" (P.5-33), "Blind Spot Warning (BSW)" (P.5-37), "Blind Spot Intervention® (BSI)" (P.5-45), "Distance Control Assist (DCA)" (P.5-89), "Forward Emergency Braking (FEB) with pedestrian detection system" (P.5-100) and "Predictive Forward Collision Warning (PFCW)" (P.5-110).

The figure and color of this indicator will change depending on the conditions of the above systems. (In each section, the name of this indicator is referred to as, "driver assist system lane indicator", "driver assist system blind spot indicator" or "driver assist system forward indicator" depending on the systems.)

30. INFINITI Drive Mode Selector indicator

When a driving mode is selected using the INFINITI Drive Mode Selector, the selected mode indicator is displayed.

- PERSONAL
- SPORT
- SPORT+ (if so equipped)
- STANDARD
- ECO
- SNOW

(See "INFINITI Drive Mode Selector" (P.5-21).)

31. Automatic Transmission (AT) position indicator

This indicator shows the automatic shift position.

In the manual shift mode, when the transmission does not shift to the selected gear due to a transmission protection mode, the AT position indicator will blink and a chime will sound.

See "Automatic Transmission (AT)" (P.5-16) for further details.

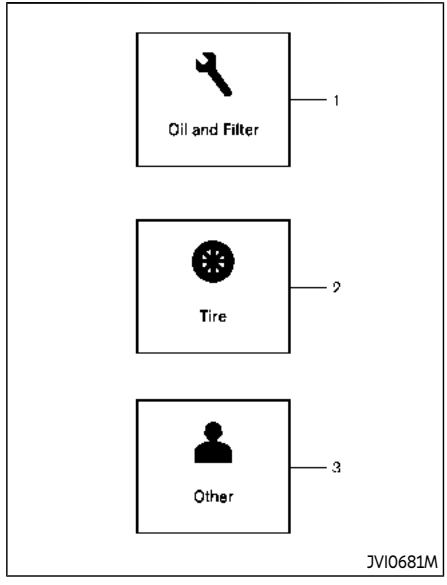

INDICATORS FOR MAINTENANCE

For setting the indicators for maintenance, see the INFINITI InTouch™ Owner's Manual.

1. Engine oil and filter replacement indicator

This indicator appears when the customer set time comes for changing the engine oil and filter. You can set or reset the distance for changing the engine oil and filter.

2. Tire replacement indicator

This indicator appears when the customer set distance comes for replacing tires. You can set or reset the distance for replacing tires.

WARNING

The tire replacement indicator is not a substitute for regular tire checks, including tire pressure checks. See "Changing wheels and tires" (P.8-33). Many factors including tire inflation, alignment, driving habits and road conditions affect tire wear and when tires should be replaced. Setting the tire replacement indicator for a certain driving distance does not mean your tires will last that long. Use the tire replacement indicator as a guide only and always perform regular tire checks. Failure to perform regular tire checks, including tire pressure checks could result in tire failure. Serious vehicle damage could occur and may lead to a collision, which could result in serious personal injury or death.

3. Other indicator

This indicator appears when the customer set time comes for replacing items other than the engine oil, oil filter and tires. You can set or reset the distance for replacing the items.

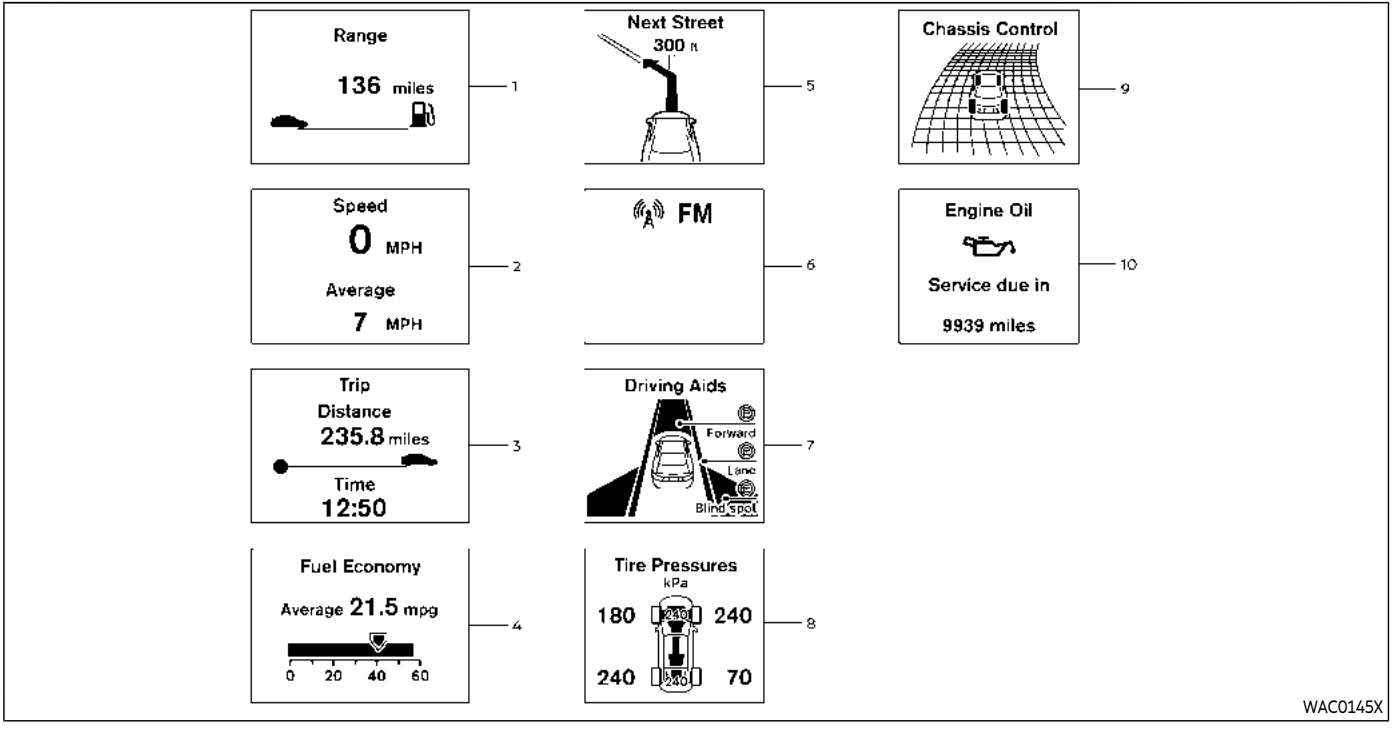
Range
136 miles
1
Next Street
300 ft
5
Chassis Control
9
Speed
0 MPH
Average
7 MPH
2
FM
6
Engine Oil
Service due in
9939 miles
10
Trip
Distance
235.8 miles
Time
12:50
3
Driving Aids
Forward
Lane
Blind spot
7
Fuel Economy
Average 21.5 mpg
0 20 40 60
4
Tire Pressures
kPa
180
240
240
70
8
WAC0145X

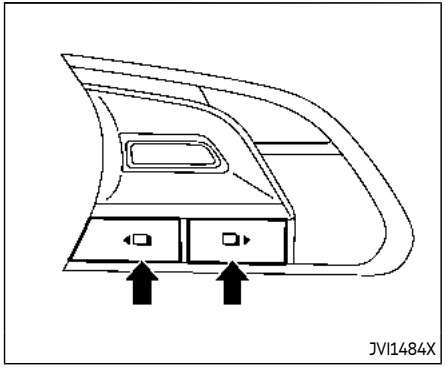

TRIP COMPUTER

Switches for the trip computer are located on the right side of the steering wheel. To operate the trip computer, push the switches.

Each time the ◀❑ or ❑▶ switch is pushed, the display will change.

The display items for trip computer are changed on the lower display. For details, see the INFINITI InTouch™ Owner's Manual.

1. Distance to empty (dte – mile or km)

The distance to empty (dte) mode provides you with an estimation of the distance that can be driven before refueling. The dte is constantly being calculated, based on the amount of fuel in the fuel tank and the actual fuel consumption.

The display is updated every 30 seconds.

The dte mode includes a low range warning feature. If the fuel level is low, the warning is displayed on the screen.

When the fuel level drops even lower, the dte display will change to "––".

- If the amount of fuel added is small, the display just before the ignition switch is placed in the OFF position may continue to be displayed.
- When driving uphill or rounding curves, the fuel in the tank shifts, which may momentarily change the display.

2. Vehicle speed (MPH or km/h)

The vehicle speed mode shows the current vehicle speed and the average vehicle speed since the last reset.

Average vehicle speed:

Resetting is done by pushing the ◀❑ or ❑▶ switch for longer than 1 second.

The average vehicle speed display is updated every 30 seconds. The first 30 seconds after a reset, the display shows "––".

3. Elapsed time and trip odometer (mile or km)

Elapsed time:

The elapsed time mode shows the time since the last reset. Resetting is done by pushing the ◀❑ or ❑▶ switch for longer than 1 second. (The trip odometer is also reset at the same time.)

Trip odometer:

The trip odometer mode shows the total distance the vehicle has been driven since the last reset. Resetting is done by pushing the ◀❑ or ❑▶ switch for longer than 1 second. (The elapsed time is also reset at the same time.)

4. Current fuel consumption and average fuel consumption (MPG, l (liter)/100 km or km/l)

Current fuel consumption:

The current fuel consumption mode shows the current fuel consumption.

Average fuel consumption:

The average fuel consumption mode shows the average fuel consumption since the last reset. Resetting is done by pushing the ◀❑ or ❑▶ switch for longer than 1 second.

The average fuel consumption is also reset

on the lower display. See the INFINITI InTouch™ Owner's Manual.

The display is updated every 30 seconds. At about the first 1/3 mile (500 m) after a reset, the display shows "––".

5. Navigation (if so equipped)

When the route guidance is set in the navigation system, this item shows the navigation route information.

For more details, see the INFINITI In-Touch™ Owner's Manual.

6. Audio

The audio mode shows the status of audio information.

For more details, see the INFINITI In-Touch™ Owner's Manual.

7. Driving aids (if so equipped)

The driving aids mode shows the operating condition for the following systems.

- Lane Departure Warning (LDW)
- Blind Spot Warning (BSW)
- Blind Spot Intervention® (BSI)
- Distance Control Assist (DCA)
- Forward Emergency Braking (FEB) with pedestrian detection system
- Predictive Forward Collision Warning (PFCW)

For more details, see "Lane Departure Warning (LDW) system" (P.5-33), "Blind Spot Warning (BSW)" (P.5-37), "Blind Spot Intervention® (BSI)" (P.5-45), "Distance Control Assist (DCA)" (P.5-89), "Forward Emergency Braking (FEB) with pedestrian detection system" (P.5-100) and "Predictive Forward Collision Warning (PFCW)" (P.5-110).

8. Tire pressure

The tire pressure mode shows the pressure of all four tires while the vehicle is driven.

When the "Tire Pressure Low - Add Air" or "Flat Tire - Visit dealer" (if so equipped) warning appears, the display can be switched to the tire pressure mode by pushing the ◀❑ or ❑▶ switch.

The tire pressure unit can be changed in the [TPMS setting] under the [Settings] menu on the lower display. (See the INFINITI InTouch™ Owner's Manual.)

NOTE:

After the ignition switch is placed in the ON position, it may take a period of time for the tire pressure to be displayed while the vehicle is driven. Depending on the radio wave circumstance, tire pressure may not correctly be displayed.

9. Chassis control

When Active Lane Control (if so equipped) or the active trace control system is operated, it shows the operating condition. See "Active Lane Control" (P.5-25) and "Active trace control" (P.5-130) for more details.

10. Oil control system

Engine oil information informs the distance to oil change.

Distance to oil change:

The distance to oil change is displayed if the distance to oil change comes to be less than 940 miles (1,500 km).

Oil replacement indicator:

When the set mileage approaches, the engine oil replacement indicator will appear on the display. After the oil is changed, reset the oil control system by pushing the ◀❑ or ❑▶ switch for longer than 1 second.

The oil change interval cannot be adjusted manually. The distance to oil change interval is calculated depending on the driving conditions and set automatically by the oil control system.

CAUTION

If the oil replacement indicator is displayed, change the engine oil as soon as possible. Operating your vehicle with deteriorated oil can damage the engine.

Warning check

The present warnings are displayed. If no warning is present, "No Warning" is displayed.

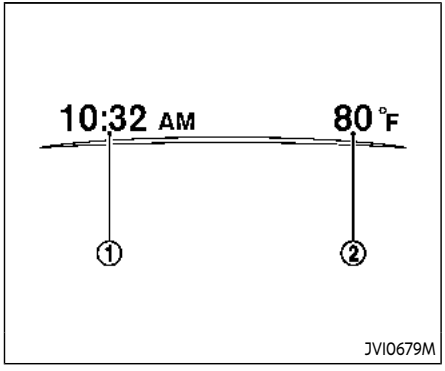

CLOCK AND OUTSIDE AIR TEMPERATURE

The clock ① and outside air temperature ② are displayed on the upper side of the vehicle information display.

Clock

The clock can be adjusted on the lower display. See the INFINITI InTouch™ Owner's Manual.

Outside air temperature (°F or °C)

The outside air temperature is displayed in °F or °C in the range of -22 to 131°F (-30 to 55°C).

The outside temperature sensor is located in front of the radiator. The sensor may be affected by road or engine heat, wind directions and other driving conditions. The display may differ from the actual outside temperature or the temperature displayed on various signs or billboards.

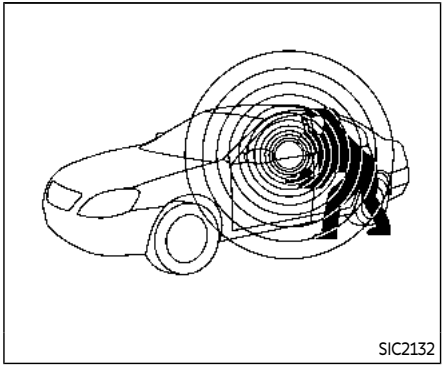

Your vehicle has two types of security systems, as follows:

- Vehicle security system
- INFINITI Vehicle Immobilizer System

The security condition will be shown by the security indicator light.

VEHICLE SECURITY SYSTEM

The vehicle security system provides visual and audio alarm signals if someone opens the doors, hood, or trunk lid when the system is armed. It is not, however, a motion detection type system that activates when a vehicle is moved or when a vibration occurs.

The system helps deter vehicle theft but cannot prevent it, nor can it prevent the theft of interior or exterior vehicle components in all situations. Always secure your vehicle even if parking for a brief period. Never leave your Intelligent Key(s) in the vehicle, and always lock it when unattended. Be aware of your surroundings, and park in secure, well-lit areas whenever possible.

Many devices offering additional protection, such as component locks, identification markers, and tracking systems, are available at auto supply stores and specialty shops. Your INFINITI retailer may also offer such equipment. Check with your insurance company to see if you may be eligible for discounts for various theft protection features.

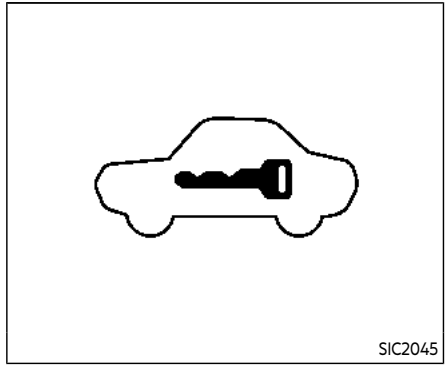

How to arm the vehicle security system

1. Close all windows.

   The system can be armed even if the windows are open.
2. Push the ignition switch to the OFF position.
3. Remove the Intelligent Key from the vehicle.
4. Close all doors, hood and trunk. Lock all doors. The doors can be locked with the Intelligent Key, door handle request switch or power door lock switch.

5. Confirm that the security indicator light comes on. The security indicator light stays on for about 30 seconds. The vehicle security system is now pre-armed. After about 30 seconds the vehicle security system automatically shifts into the armed phase. The security light begins to flash once every approximately 3 seconds. If, during this 30-second pre-arm time period, the door is unlocked, or the ignition switch is pushed to ACC or ON, the system will not arm.

Even when the driver and/or passengers are in the vehicle, the system will activate with all doors, hood, and trunk lid locked with the ignition switch in the LOCK position. When pushing the ignition switch to the ACC or ON position, the system will be released.

Vehicle security system activation

The vehicle security system will give the following alarm:

- The headlights blink and the horn sounds intermittently.
- The alarm automatically turns off after approximately 1 minute. However, the alarm reactivates if the vehicle is tampered with again.

The alarm is activated by:

- Unlocking the door or opening the trunk lid without using the UNLOCK button on the Intelligent Key, the door handle request switch or one touch unlock sensor. (Even if the door is opened by releasing the door inside lock knob or using the mechanical key, the alarm will activate.)
- Opening the hood.

How to stop an activated alarm

The alarm will stop by unlocking a door by pushing the UNLOCK button on the Intelligent Key, the door handle request switch or touching the one touch unlock sensor. The alarm will not stop if the ignition switch is placed in the ACC or ON position.

If the Intelligent Key battery is discharged:

If the Intelligent Key battery is discharged, the alarm will not stop by pushing the UNLOCK button on the Intelligent Key, the door handle request switch or one touch unlock sensor. In such a case, unlock the driver's door using the mechanical key and touch the ignition switch with the Intelligent Key to stop the alarm. See "Intelligent Key battery discharge" (P.5-14) for details.

If the system does not operate as described above, it is recommended you have it checked by an INFINITI retailer.

INFINITI VEHICLE IMMOBILIZER SYSTEM

The INFINITI Vehicle Immobilizer System will not allow the engine to start without the use of the registered Intelligent Key. **Never leave these keys in the vehicle.**

FCC Notice:

For USA:

This device complies with Part 15 of the FCC Rules. Operation is subject to the following two conditions: (1) This device may not cause harmful interference, and (2) this device must accept any interference received, including interference that may cause undesired operation.

NOTE:

Changes or modifications not expressly approved by the party responsible for compliance could void the user's authority to operate the equipment.

For Canada:

This device complies with Industry Canada licence-exempt RSS standard(s). Operation is subject to the following two conditions: (1) this device may not cause interference, and (2) this device must accept any interference, including interference that may cause undesired operation of the device.

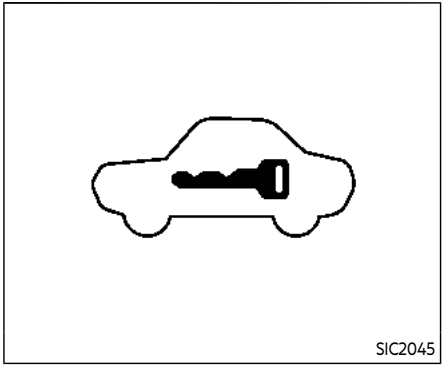

Security indicator light

The security indicator light is located on the meter panel. It indicates the status of the INFINITI Vehicle Immobilizer System.

The light blinks after the ignition switch was in the LOCK, ACC or OFF position. This function indicates the security systems equipped on the vehicle are operational.

If the INFINITI Vehicle Immobilizer System is malfunctioning, this light will remain on while the ignition switch is in the ON position.

If the light still remains on and/or the engine will not start, seek service for the INFINITI Vehicle Immobilizer System as soon as possible. Please bring all registered keys that you have. It is recommended you visit an INFINITI retailer for this service.

WARNING

In freezing temperatures the washer solution may freeze on the windshield and obscure your vision which may lead to an accident. Warm windshield with the defroster before you wash the windshield.

CAUTION

- **Do not operate the washer continuously for more than 30 seconds.**
- **Do not operate the washer if the reservoir tank is empty.**
- **Do not fill the window washer reservoir tank with washer fluid concentrates at full strength. Some methyl alcohol based washer fluid concentrates may permanently stain the grille if spilled while filling the window washer reservoir tank.**
- **Pre-mix washer fluid concentrates with water to the manufacturer's recommended levels before pouring the fluid into the window washer reservoir tank. Do not use the window washer reservoir tank to mix the**

washer fluid concentrate and water.

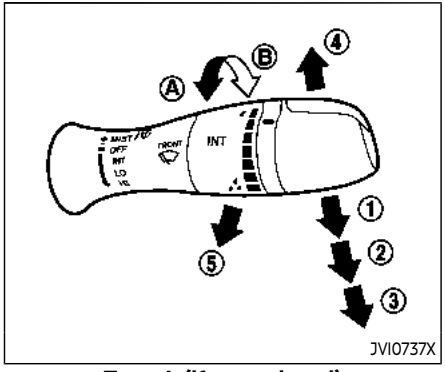

Type A (if so equipped)

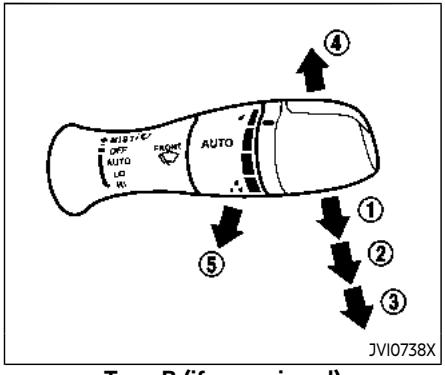

Type B (if so equipped)

The windshield wiper and washer operates when the ignition switch is in the ON position.

Push the lever down to operate the wiper at the following speed:

① INT (Type A) (if so equipped) – intermittent operation can be adjusted by turning the knob toward Ⓐ (Slower) or Ⓑ (Faster). When the speed sensing wiper interval function is turned on, the intermittent operation speed varies in accordance with the vehicle speed. (For example, when the vehicle speed is high, the intermittent operation speed will be faster.) To turn this function on and off, see the INFINITI InTouch™ Owner's Manual.

① AUTO (Type B) (if so equipped) – For models with the rain-sensing auto wiper system, see "Rain-sensing auto wiper system" (P.2-36).

② LO – continuous low speed operation

③ HI – continuous high speed operation

④ MIST – one sweep operation of the wiper

Pull the lever toward you ⑤ to operate the washer. Then the wiper will also operate several times.

Pulling up the wiper arm:

The wiper arm should be in the up position

when replacing the windshield wiper blade.

To replace the windshield wiper blades, follow the procedure below:

1. When the ignition switch is ON or within 60 seconds after placing the ignition switch from the ON to OFF position, place the windshield wiper and washer lever into the OFF position.
2. Rapidly lift the lever ④ upwards twice within 0.5 seconds. This action will cause the wipers to automatically take the service position.

To return the wiper arm, place the wiper arm in the down position and operate the wiper switch once.

CAUTION

Do not operate the windshield wiper while the wiper arm is pulled up. The wiper arm may be damaged.

Wiper drip wipe system:

The wiper will also operate once about 3 seconds after the washer and wiper are operated. This operation is to wipe washer fluid that has dripped on the windshield.

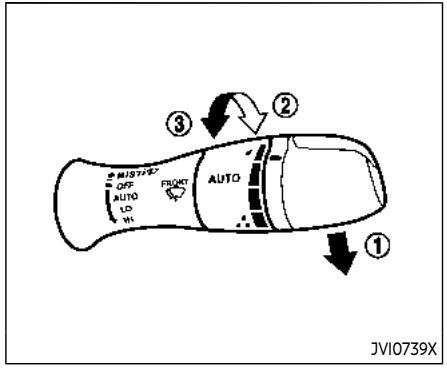

RAIN-SENSING AUTO WIPER SYSTEM (if so equipped)

The rain-sensing auto wiper system can automatically turn on the wipers and adjust the wiper speed depending on the rainfall and the vehicle speed by using the rain sensor located on the upper part of the windshield.

To set the rain-sensing auto wiper system, push the lever down to the AUTO position ①. The wiper will sweep once while the ignition switch is in the ON position.

The rain sensor sensitivity level can be adjusted by turning the knob toward ② (High) or toward ③ (Low).

- High – High sensitive operation
- Low – Low sensitive operation

To turn the rain-sensing auto wiper system off, push up the lever to the OFF position, or pull down the lever to the LO or HI position.

CAUTION

Do not touch the rain sensor and around it when the wiper switch is in the AUTO position and the ignition switch is in the ON position. The wipers may operate unexpectedly and cause to an injury or may damage a wiper.

- **The rain-sensing auto wipers are intended for use during rain. If the switch is left in the AUTO position, the wipers may operate unexpectedly when dirt, fingerprints, oil film or insects are stuck on or around the sensor. The wipers may also operate when exhaust gas or moisture affect the rain sensor.**
- **The rain-sensing auto wipers may not operate if rain does not hit the rain sensor even if it is raining.**
- **When the windshield glass is coated with water repellent, the speed of the rain-sensing auto wipers may be higher even though the amount of the rainfall is small.**

- **Be sure to turn off the rain-sensing auto wiper system when you use a car wash.**
- **Using genuine wiper blades is recommended for proper operation of the rain-sensing auto wiper system. (See "Windshield wiper blades" (P.8-15) for wiper blade replacement.)**

REAR WINDOW AND OUTSIDE MIRROR DEFROSTER SWITCH

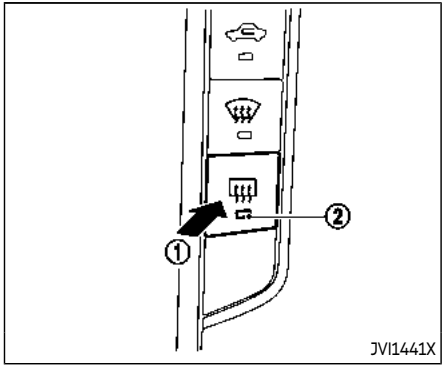

To defog/defrost the rear window glass and outside mirrors, start the engine and push the switch ① on. The indicator light ② will come on. Push the switch again to turn the defroster off.

It will automatically turn off in approximately 15 minutes.

If the engine is started using the remote start function (if so equipped) when the outside air temperature, the interior temperature and the engine coolant temperature are low, the rear window glass and outside mirror defroster may turn on automatically. For additional information about the remote engine start function, see "Remote engine start" (P.3-19).

CAUTION

When cleaning the inner side of the rear window, be careful not to scratch or damage the rear window defroster.

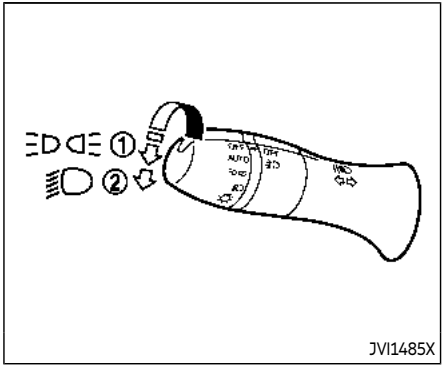

JVI1485X

HEADLIGHT SWITCH

Lighting

① Turn the switch to the position:
The front parking, side marker, tail and license plate lights will come on.

② Turn the switch to the position:
Headlights will come on and all the other lights remain on.

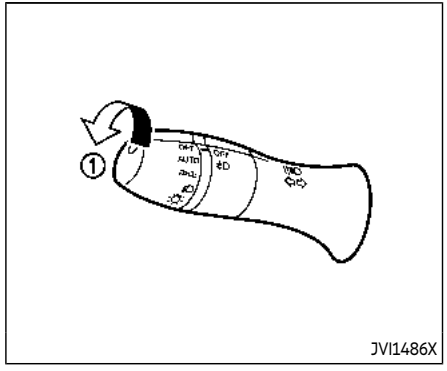

JVI1486X

Autolight system

The autolight system allows the headlights to be set so they turn on and off automatically.

To set the autolight system:

1. Make sure the headlight switch is in the AUTO position ①.
2. Place the ignition switch in the ON position.
3. The autolight system automatically turns the headlights on and off.

To turn the autolight system off, turn the switch to the OFF, or position.

The autolight system can turn on the headlights automatically when it is dark and turn off the headlights when it is light.

The headlights will turn on automatically at twilight or in rainy weather (when the windshield wiper is operated continuously).

If the ignition switch is placed in the OFF position and one of the doors is opened and this condition is continued, the headlights remain on for 5 minutes.

Automatic headlights off delay:

You can keep the headlights on for up to 180 seconds after you place the ignition switch in the OFF position and open any door then close all the doors.

You can adjust the period of the automatic headlights off delay from 0 seconds (OFF) to 180 seconds. The factory default setting is 45 seconds.

For automatic headlights off delay setting, see the INFINITI InTouch™ Owner's Manual.

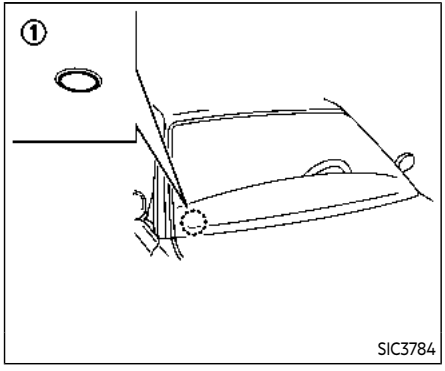

Be sure not to put anything on top of the photo sensor ① located on the top of the instrument panel. The photo sensor controls the autolight; if it is covered, the photo sensor reacts as if it is dark and the headlights will illuminate.

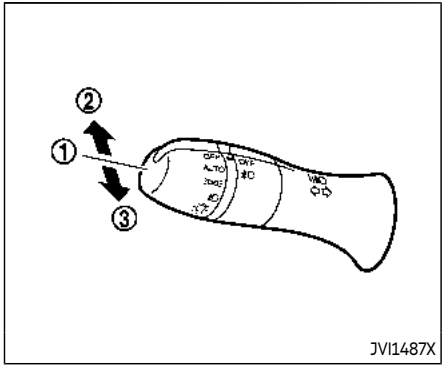

① To select the low beam, put the lever in the neutral position as shown.

② To select the high beam, push the lever forward while the switch is in the position. Pull it back to select the low beam.

③ Pulling the lever toward you will flash the headlight high beam even when the headlight switch is in the OFF position.

Headlight beam select

High beam assist (if so equipped)

The high beam assist system will operate when the vehicle is driven at speeds of approximately 19 MPH (30 km/h) and above. If an oncoming vehicle or leading vehicle appears in front of your vehicle when the headlight high beam is on, the headlight will be switched to the low beam automatically.

Precautions on high beam assist:

WARNING

- **The high beam assist system is a convenience but it is not a substitute for safe driving operation. The driver should remain alert at all times, ensure safe driving practices and switch the high beams and low beam manually when necessary.**
- **The high beam or low beam may not switch automatically under the following conditions. Switch the high beam and low beam manually.**
  - **During bad weather (rain, fog, snow, wind, etc.).**
  - **When a light source similar to a headlight or tail light is in the vicinity of the vehicle.**
  - **When the headlights of the oncoming vehicle or the leading vehicle are turned off, when the color of the light is affected due to foreign materials on the lights, or**

when the light beam is out of position.

– When there is a sudden, continuous change in brightness.

– When driving on a road that passes over rolling hills, or a road that has level differences.

– When driving on a road with many curves.

– When a sign or mirror-like surface is reflecting intense light towards the front of the vehicle.

– When the container, etc. being towed by a leading vehicle is reflecting intense light.

– When a headlight on your vehicle is damaged or dirty.

– When the vehicle is leaning at an angle due to a punctured tire, being towed, etc.

- **The timing of switching the low beam and high beam may change under the following situations.**
  – **The brightness of the headlights of the oncoming vehicle or leading vehicle.**
  – **The movement and direction of the oncoming vehicle and the leading vehicle.**
  – **When only one light on the oncoming vehicle or the leading vehicle is illuminated.**
  – **When the oncoming vehicle or the leading vehicle is a two-wheeled vehicle.**
  – **Road conditions (incline, curve, the road surface, etc.).**
  – **The number of passengers and the amount of luggage.**

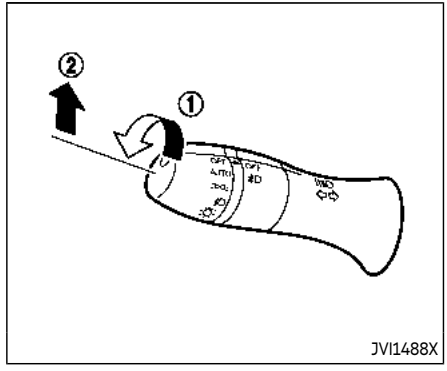

High beam assist operations:

To activate the high beam assist system, turn the headlight switch to the AUTO position ① and push the lever forward ② (high beam position). The high beam assist indicator light in the meter will illuminate while the headlights are turned on.

If the high beam assist indicator light does not illuminate in the above condition, it may indicate that the system is not functioning properly. It is recommended you have the system checked by an INFINITI retailer.

When the vehicle speed lowers to less than approximately 12 MPH (20 km/h), the headlight remains the low beam.

To turn off the high beam assist system, turn the headlight switch to the position or select the low beam position by placing the lever in the neutral position.

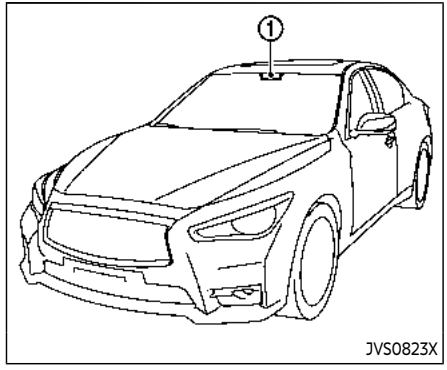

Ambient image sensor maintenance:

The ambient image sensor ① for the high beam assist system is located above the inside mirror. To keep the proper operation of the high beam assist system and prevent a system malfunction, be sure to observe the following:

- Always keep the windshield clean.
- Do not attach a sticker (including transparent material) or install an accessory near the ambient image sensor.
- Do not strike or damage the areas around the ambient image sensor.

If the ambient image sensor is damaged due to an accident, it is recommended you contact an INFINITI retailer.

Battery saver system

A chime will sound and the light reminder warning will appear in the vehicle information display when the driver side door is opened with the light switch in the or position and the ignition switch in the ACC, OFF or LOCK position.

When the headlight switch is in the or position while the ignition switch is in the ON position, the lights will automatically turn off after a period of time when the ignition switch has been pushed to the OFF position.

When the headlight switch remains in the or position after the lights automatically turn off, the lights will turn on when the ignition switch is pushed to the ON position.

CAUTION

- **When you turn on the headlight switch again after the lights automatically turn off, the lights will not turn off automatically. Be sure to turn the light switch to the OFF position when you leave the vehicle for extended periods of time, otherwise the battery will be discharged.**

- **Never leave the light switch on when the engine is not running for a period of time even if the headlights turn off automatically.**

Daytime running light system

The daytime running lights automatically illuminate when the engine is started with the parking brake released. The daytime running lights operate with the headlight switch in the OFF, AUTO or position. Turn the headlight switch to the position for full illumination when driving at night.

If the parking brake is applied before the engine is started, the daytime running lights do not illuminate. The daytime running lights illuminate once the parking brake is released. The daytime running lights will remain on until the ignition switch is pushed to the OFF position.

WARNING

When the daytime running light system is active, tail lights on your vehicle are not on. It is necessary at dusk to turn on your headlights. Failure to do so could cause an accident injuring yourself and others.

Adaptive Front lighting System (AFS) (if so equipped)

The Adaptive Front lighting System (AFS) will automatically adjust the headlights (low beam) toward the turning direction to improve the driver's view. When the headlight switch is ON and the driver operates the steering wheel in a turn, the AFS system will be activated.

The AFS will operate:

- when the headlight switch is ON.
- when the shift lever is in any position other than P (Park) or R (Reverse).
- when the vehicle is driven at above 3 MPH (5 km/h) for the left-side headlight. Note that the right-side low beam headlight will swivel but the left-side headlight will not swivel when the vehicle is below 3 MPH (5 km/h) and the steering wheel is turned.

AFS will also adjust the headlight to a proper axis automatically, depending on the number of occupants in the vehicle, the load the vehicle is carrying and the road conditions.

If the AFS warning appears in the vehicle information display after the ignition switch has been pushed to the ON position, this may indicate that the AFS is not functioning properly. Have the system checked. It is recommended you visit an INFINITI retailer for this service. When the engine is started, the headlights will vibrate to check the system condition. This is not a malfunction.

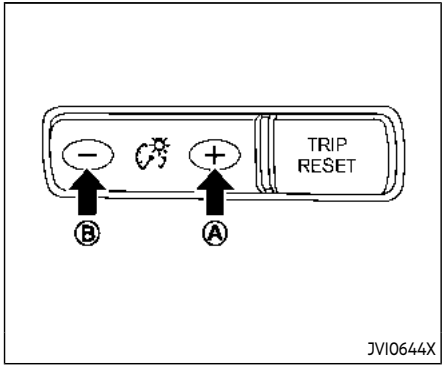

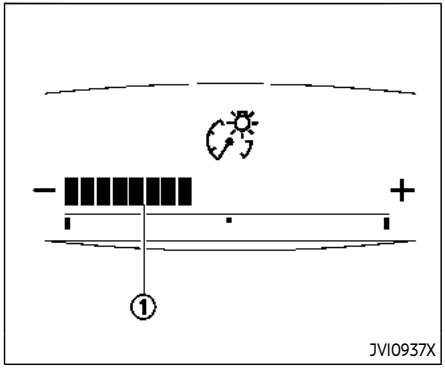

Instrument brightness control

The instrument brightness control switch can be operated when the ignition switch is in the ON position. When the switch is operated, the vehicle information display switches to the brightness adjustment mode.

Push the + side of the switch Ⓐ to brighten the instrument panel lights. The bar ① moves to the + side.

Push the - side of the switch Ⓑ to dim the instrument panel lights. The bar ① moves to the - side. When the brightness level reaches the minimum, the instrument panel lights will turn off during the nighttime.

When the brightness level reaches the maximum or minimum, a beep will sound.

The vehicle information display returns to the normal display when the instrument brightness control switch is not operated for more than 5 seconds.

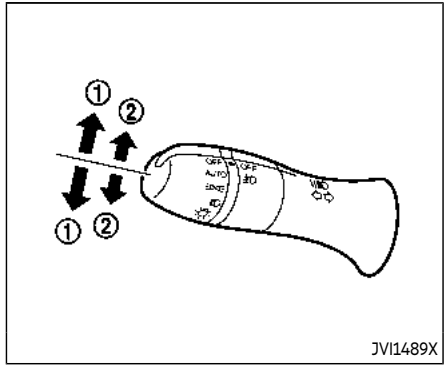

TURN SIGNAL SWITCH

① Turn signal

Move the lever up or down to signal the turning direction. When the turn is completed, the turn signals cancel automatically.

② Lane change signal

- Move the lever up or down until the turn signal begins to flash, but the lever does not latch, to signal a lane change. Hold the lever until the lane change is completed.
- Move the lever up or down until the turn signal begins to flash, but the lever does not latch, and release the lever. The turn

signal will automatically flash three times.

Choose the appropriate method to signal a lane change based on road and traffic conditions.

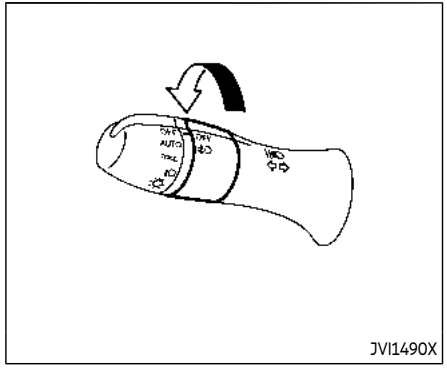

JVI1490X

FOG LIGHT SWITCH

To turn the fog lights on, turn the headlight switch to the position, then turn the switch to the position. To turn them off, turn the switch to the OFF position.

The headlights must be on with the low beams selected for the fog lights to operate. The fog lights automatically turn off when the high beam headlights are selected.

HORN

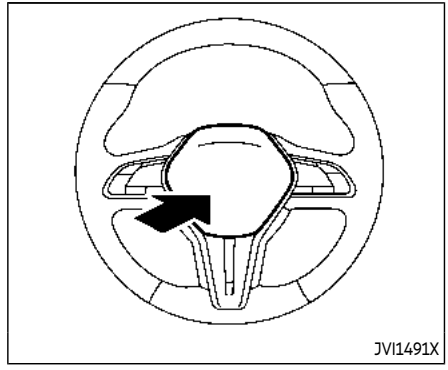
JVI1491X

To sound the horn, push the center pad area of the steering wheel.

WARNING

Do not disassemble the horn. Doing so could affect proper operation of the supplemental front air bag system. Tampering with the supplemental front air bag system may result in serious personal injury.

VEHICLE DYNAMIC CONTROL (VDC) OFF SWITCH

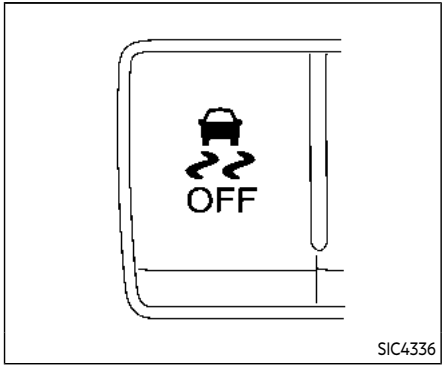

The vehicle should be driven with the Vehicle Dynamic Control (VDC) system on for most driving conditions.

If the vehicle is stuck in mud or snow, the VDC system reduces the engine output to reduce wheel spin. The engine speed will be reduced even if the accelerator is depressed to the floor. If maximum engine power is needed to free a stuck vehicle, turn the VDC system off.

To turn off the VDC system, push the VDC OFF switch. The indicator light will illuminate.

Push the VDC OFF switch again or restart the engine to turn on the system. (See "Vehicle Dynamic Control (VDC) system" (P.5-129).)

HEATED SEATS (if so equipped)

WARNING

Do not use or allow occupants to use the seat heater if you or the occupants cannot monitor elevated seat temperatures or have an inability to feel pain in those body parts in contact with the seat. Use of the seat heater by such people could result in serious injury.

CAUTION

- **The battery could run down if the seat heater is operated while the engine is not running.**
- **Do not use the seat heater for extended periods or when no one is using the seat.**
- **Do not put anything on the seat which insulates heat, such as a blanket, cushion, seat cover, etc. Otherwise, the seat may become overheated.**
- **Do not place anything hard or heavy on the seat or pierce it with a pin or similar object. This may result in damage to the heater.**

- **Any liquid spilled on the heated seat should be removed immediately with a dry cloth.**
- **When cleaning the seat, never use gasoline, thinner, or any similar materials.**
- **If any malfunctions are found or the heated seat does not operate, turn the switch off and have the system checked. It is recommended you visit an INFINITI retailer for this service.**

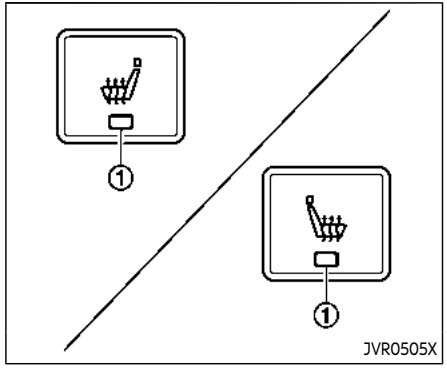

The front seats can be warmed by built-in heaters. The heating system of driver's seat and front passenger seat can be operated independently.

OPERATION WITH SWITCH

1. Start the engine.
2. Push the switch on the instrument panel.
   - Each time the switch is pushed, the seat heating mode will change in the following order.

     AUTO → High → Mid → Low → OFF
   - The indicator light ① on the switch will illuminate when the heater is on.

When the vehicle's interior is warmed, or before you leave the vehicle, be sure to turn off the seat heater.

OPERATION WITH TOUCH SCREEN

Push the CLIMATE button and touch [ ] or [ ] on the lower display. Select an item from [AUTO], [High], [Mid], [Low] or [OFF].

AUTO MODE SETTING

When in the AUTO mode, the heater will turn on or off automatically according to the conditions such as the temperature inside the vehicle compartment. Depending on the conditions, the heater will not turn on even if AUTO is selected. The settings for the AUTO mode can be changed. For details, see "Climate settings" (P.4-40).

HEATED STEERING WHEEL (if so equipped)

WARNING

Do not use or allow occupants to come into contact with the heated steering wheel if you or the occupants cannot monitor elevated steering wheel temperatures or have an inability to feel pain in those body parts in contact. Use of the heated steering wheel by such people could result in serious injuries.

CAUTION

- **The battery could run down if the steering wheel heater is operated while the engine is not running.**
- **Do not use the steering wheel heater for extended periods of time as it may cause burns and overheating.**
- **Any liquid spilled on the steering wheel should be removed immediately with a dry cloth.**
- **When cleaning the steering wheel, never use gasoline, thinner, or any similar materials.**
- **If any malfunctions are found or the steering wheel heater does not operate, turn the heater off and have the system checked. It is recommended that you visit an INFINITI retailer for this service.**

Push the CLIMATE button and touch [Steering Heater] on the lower display to turn on or off the steering wheel heating manually. The steering wheel heating will turn off automatically 30 minutes after it has been turned on. When the steering wheel heating is turned on, the indicator above [Steering Heater] will turn on.

If the surface temperature of the steering wheel is above the temperature within which the system is designed to operate, the system will not heat the steering wheel. This is not a malfunction.

Automatic steering wheel heating can be turned on or off from the climate control settings screen. For details, see “Climate settings” (P.4-40).

POWER OUTLETS

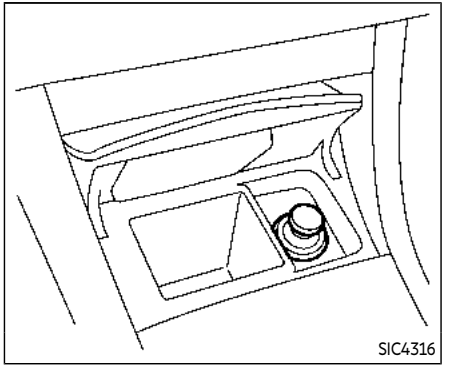

In the storage box

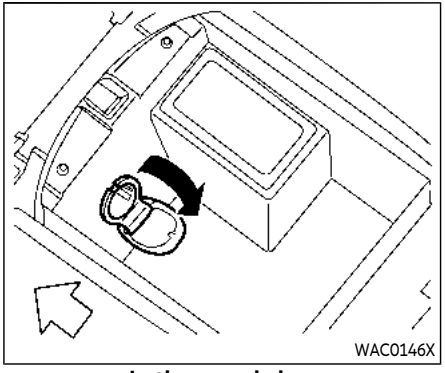

In the console box

The power outlets are located in the storage box and in the console box.

CAUTION

- **The outlet and plug may be hot during or immediately after use.**
- **Do not use with accessories that exceed a 12 volt, 120W (10A) power draw. Do not use double adapters or more than one electrical accessory.**
- **Use power outlet with the engine running to avoid discharging the vehicle battery.**
- **Avoid using power outlet when the air conditioner, headlights or rear window defroster is on.**
- **This power outlet is not designed for use with a cigarette lighter unit.**
- **Push the plug in as far as it will go. If good contact is not made, the plug may overheat or the internal temperature fuse may blow.**
- **Before inserting or disconnecting a plug, be sure the electrical accessory being used is turned OFF.**
- **When not in use, be sure to close the cap. Do not allow water or any liquid to contact the outlet.**

STORAGE

CUP HOLDERS

CAUTION

- **Avoid abrupt starting and braking when the cup holder is being used to prevent spilling the drink. If the liquid is hot, it can scald you or your passenger.**
- **Use only soft cups in the cup holder. Hard objects can injure you in an accident.**

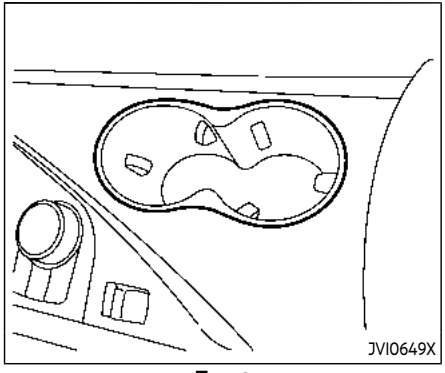

Front

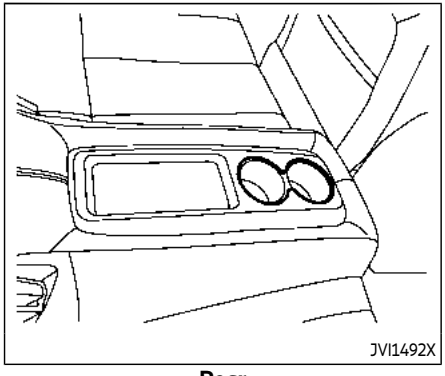

Rear

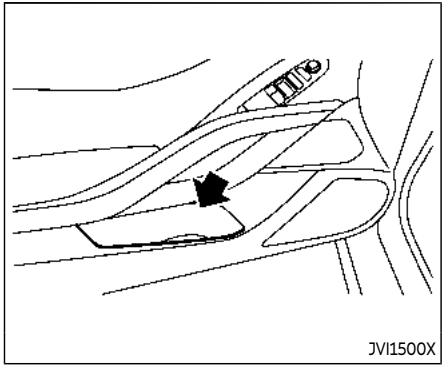

SOFT BOTTLE HOLDER

CAUTION

- **Do not use bottle holder for any other objects that could be thrown about in the vehicle and possibly injure people during sudden braking or an accident.**
- **Do not use bottle holder for open liquid containers.**

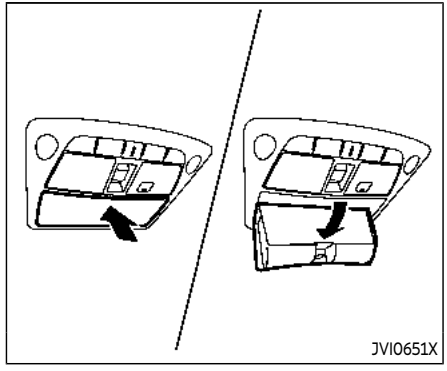

SUNGLASSES HOLDER

WARNING

Keep the sunglasses holder closed while driving to avoid obstructing the driver's view and to help prevent an accident.

To open the sunglasses holder, push the holder.

CAUTION

- **Do not use for anything other than glasses.**
- **Do not leave glasses in the sunglasses holder while parking in direct sunlight. The heat may damage the glasses.**

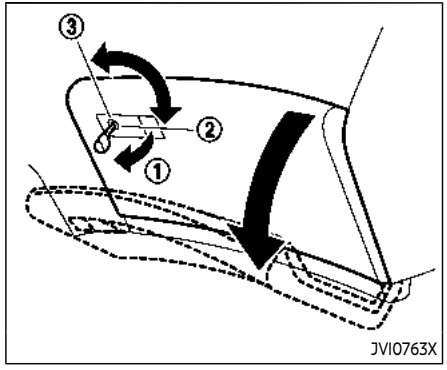

GLOVE BOX

WARNING

Keep glove box lid closed while driving to help prevent injury in an accident or a sudden stop.

To open the glove box, pull the handle ①.

To close, push the lid in until the lock latches.

To lock ②/unlock ③ the glove box, use the mechanical key. For the mechanical key usage, see “Keys” (P.3-2).

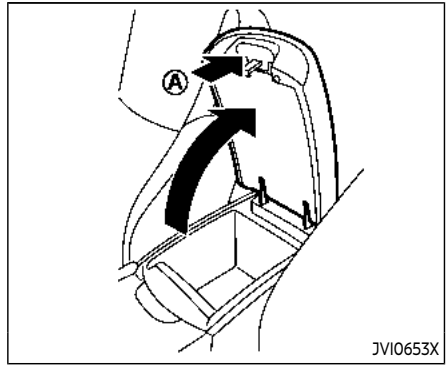

CONSOLE BOX

To open the console box, push up the knob Ⓐ and pull up the lid.

To close, push the lid down until latched.

The console box light illuminates when the headlight switch is in the position.

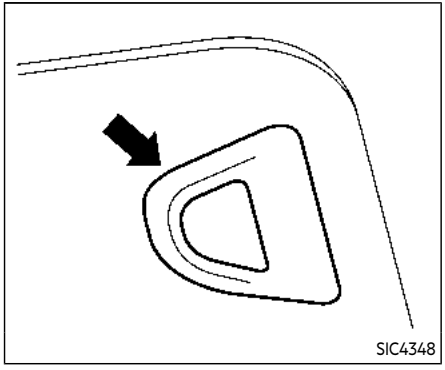

CARD HOLDER

The card holder is located on the driver's sun visor.

To use the card holder, slide the card in the card holder.

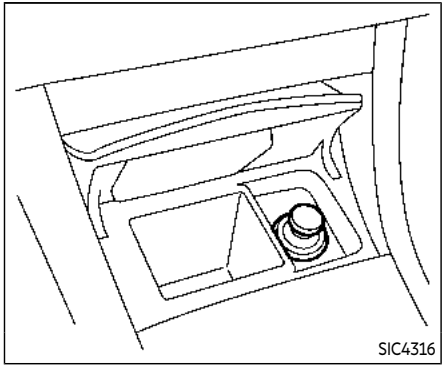

STORAGE BOX

To open, push the storage box lid.

Do not place valuable items in the storage box.

Do not use the storage box as an ashtray.

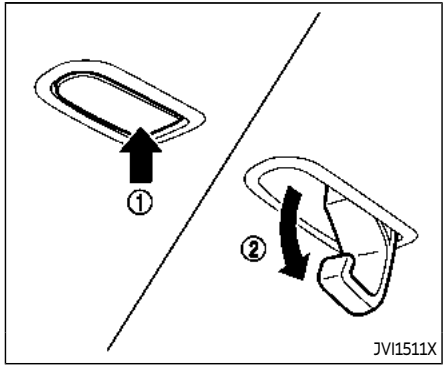

COAT HOOKS

To use the coat hook, push the hook ① to release ②.

CAUTION

Do not place items which are more than 2 lb (1 kg) on the hook.

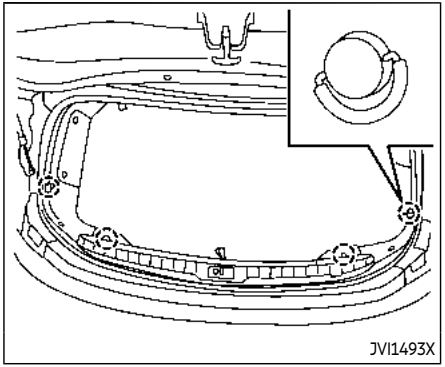

TRUNK HOOKS

WARNING

- **Always make sure that the cargo is properly secured. Use the suitable ropes and hooks.**
- **Unsecured cargo can become dangerous in an accident or sudden stop.**

CAUTION

Do not apply a total load of more than 22 lb (10 kg) to a single hook.

WINDOWS

POWER WINDOWS

WARNING

- **Make sure that all passengers have their hands, etc. inside the vehicle while it is in motion and before closing the windows. Use the window lock switch to prevent unexpected use of the power windows.**
- **To help avoid risk of injury or death through unintended operation of the vehicle and or its systems, including entrapment in windows or inadvertent door lock activation, do not leave children, people who require the assistance of others or pets unattended in your vehicle. Additionally, the temperature inside a closed vehicle on a warm day can quickly become high enough to cause a significant risk of injury or death to people and pets.**

The power windows operate when the ignition switch is in the ON position or for about 45 seconds after the ignition switch is pushed to the OFF position. If the driver's or front passenger's door is opened during this period of about 45 seconds, power to the windows is canceled.

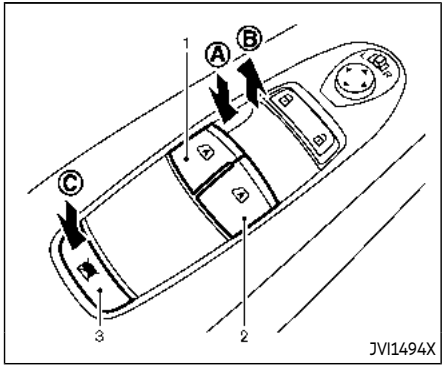

1. Driver side window
2. Front passenger side window
3. Window lock button

Main power window switch (driver's side)

To open or close the window, push down Ⓐ or pull up Ⓑ the switch and hold it. The main switch (driver side switches) will open or close all the windows.

Locking passenger's window

When the lock button Ⓒ is pushed in, only the driver side window can be opened or closed. Push it in again to cancel.

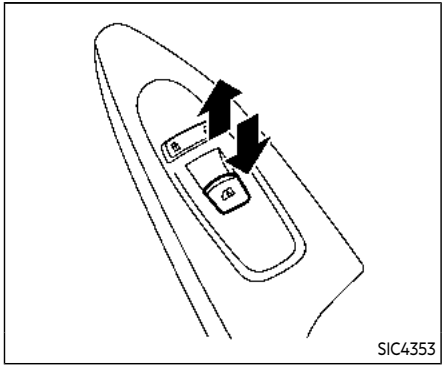

Front passenger side power window switch

The front passenger side switch will open or close the front passenger side window. To open or close the window, push down or pull up the switch and hold it.

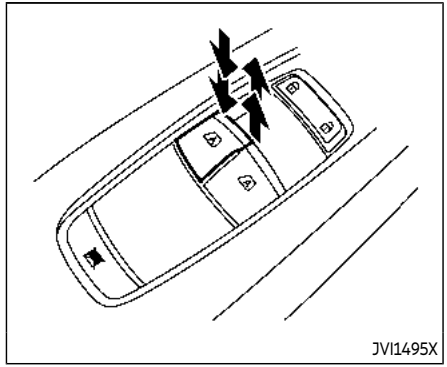

Automatic operation

To fully open or close the window, completely push down or pull up the switch and release it; it need not be held. The window will automatically open or close all the way. To stop the window, just push or lift the switch in the opposite direction.

A light push or pull on the switch will cause the window to open or close until the switch is released.

Auto reverse function

WARNING

There are some small distances immediately before the closed position which cannot be detected. Make sure that all passengers have their hands, etc., inside the vehicle before closing the window.

If the control unit detects something caught in the window as it is closing, the window will be immediately lowered.

The auto reverse function can be activated when the window is closed by automatic operation when the ignition switch is in the ON position or for 45 seconds after the ignition switch is pushed to the OFF position.

Depending on the environment or driving conditions, the auto reverse function may be activated if an impact or load similar to something being caught in the window occurs.

Automatic adjusting function

CAUTION

When the battery cable is removed from the battery terminal, do not close either of the front doors. The automatic window adjusting function will not work and the side roof panel may be damaged.

The power window has an automatic adjusting function. When the door is being opened, the window is automatically lowered slightly to avoid contact between the window and the side roof panel. When the door is closed, the window is automatically raised slightly.

While the automatic adjusting function does not work, the window will be controlled as follows:

- When the door is opened, the window lowers for approximately 2 seconds.
- While the door is open, the window cannot be raised.

If the windows do not close automatically

If the power window automatic function (closing only) does not operate properly, perform the following procedure to initialize the power window system.

1. Push the ignition switch to start the engine.
2. Close the door.
3. After starting the engine, open the window completely by operating the power window switch.
4. Pull the power window switch and hold it to close the window, and then hold the switch more than 3 seconds after the window is closed completely.
5. Release the power window switch. Operate the window by the automatic function to confirm the initialization is complete.
6. Perform steps 2 through 5 above for other windows.

If the power window automatic function does not operate properly after performing the procedure above, it is recommended you have your vehicle checked by an INFINITI retailer.

WARNING

- **In an accident you could be thrown from the vehicle through an open moonroof. Always use seat belts and child restraints.**
- **Do not allow anyone to stand up or extend any portion of their body out of the moonroof opening while the vehicle is in motion or while the moonroof is closing.**

CAUTION

- **Remove water drops, snow, ice or sand from the moonroof before opening.**
- **Do not place any heavy object on the moonroof or surrounding area.**

POWER MOONROOF

The moonroof only operates when the ignition switch is in the ON position.

The moonroof is operational for about 45 seconds, even if the ignition switch is pushed to the OFF position. If the driver's door or the passenger's door is opened during this period of about 45 seconds, power to the moonroof is canceled.

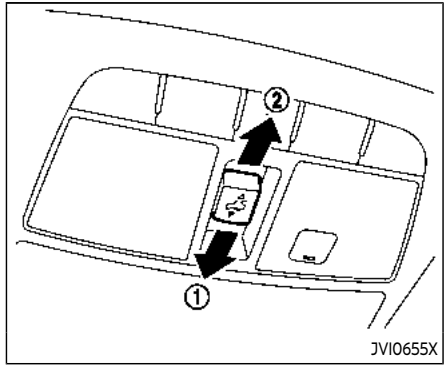

Sunshade

The sunshade will open automatically when the moonroof is opened. However, it must be closed manually.

Tilting the moonroof

To tilt up, first close the moonroof, then push the switch to the tilt up position ① and release it; it need not be held. To tilt down the moonroof, push the switch to the tilt down position ②.

Sliding the moonroof

To fully open or close the moonroof, push the switch to the open ② or close ① position and release it; it need not be held. The roof

will automatically open or close all the way. To stop the roof, push the switch once more while it is opening or closing.

Operating moonroof with Intelligent Key (if so equipped)

The moonroof can be opened by pushing the UNLOCK button on the Intelligent Key. This function will not operate while the moonroof timer is activated or when the moonroof need to be initialized. For details about the Intelligent Key button usage, see "How to use remote keyless entry system" (P.3-16).

Opening:

To open the sunroof, push the UNLOCK button on the Intelligent Key for about 3 seconds after the door is unlocked.

To stop opening, release the button.

Auto reverse function

WARNING

There are some small distances immediately before the closed position which cannot be detected. Make sure that all passengers have their hands, etc., inside the vehicle before closing the moonroof.

If the control unit detects something caught in the moonroof when it is closing, the moonroof will be immediately opened.

The auto reverse function can be activated when the moonroof is closed by automatic operation when the ignition switch is in the ON position or for about 45 seconds after the ignition switch is pushed to the OFF position.

If the moonroof cannot be closed automatically when the auto reverse function activates due to a malfunction, push and hold the moonroof switch to the close position ①.

Depending on the environment or driving conditions, the auto reverse function may be activated if an impact or load similar to something being caught in the moonroof occurs.

If the moonroof does not operate

If the moonroof does not operate properly, perform the following procedure to initialize the moonroof operation system.

1. If the moonroof is open, close it fully by repeatedly pushing the moonroof switch to the close position ① to tilt the moonroof up.
2. Push and hold the switch to the close position ①.
3. Release the moonroof switch after the moonroof moves slightly up and down.
4. Push and hold the switch to the open position ② to fully tilt the moonroof down.
5. Check if the moonroof switch operates normally.

If the moonroof does not operate properly after performing the procedure above, have your moonroof checked and repaired. It is recommended you visit an INFINITI retailer for this service.

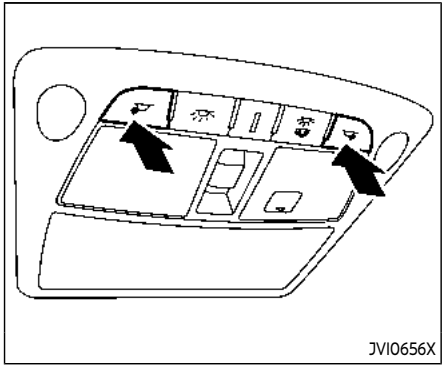

MAP LIGHTS

Push the button as illustrated to turn the light on or off.

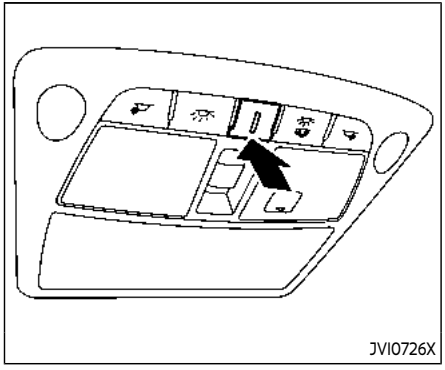

CONSOLE LIGHT (if so equipped)

The console light will turn on whenever the front parking lights or headlights are illuminated.

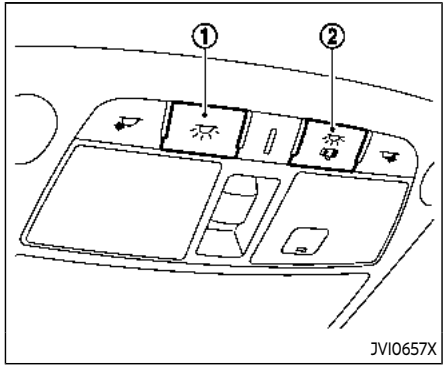

INTERIOR LIGHT CONTROL SWITCH

① ON switch

When the ON switch ① is pushed in, the map lights will illuminate. When the switch is pushed off, the lights will not illuminate, regardless of the condition.

② DOOR OFF switch

When the DOOR OFF switch ② is not pushed in, the map lights will illuminate under the following conditions:

- ignition switch is switched to the OFF position

– remain on for about 15 seconds.

- doors are unlocked by pushing the UNLOCK button on the Intelligent Key or one touch unlock sensor with the ignition switch in the LOCK position
  – remain on for about 15 seconds.
- any door is opened and then closed with the ignition switch in the LOCK position
  – remain on for about 15 seconds.
- any door is opened
  – remain on while the door is opened. When the door is closed, the lights go off.

When the DOOR OFF switch ② is pushed in, the map lights will not illuminate under the above condition. The map lights can be turned on only with the ON switch ①.

The lights will also turn off after a period of time when the lights remain illuminated after the ignition switch has been pushed to the OFF or LOCK position to prevent the battery from becoming discharged.

When [Lamp ON when Door Unlocks] is set to the OFF position on the lower display (see the INFINITI InTouch™ Owner's Manual), the lights will illuminate under the following condition:

- any door is opened with the ignition switch in any position
  – remain on while the door is opened. When the door is closed, the lights go off.

CAUTION

Do not use for extended periods of time with the engine stopped. This could result in a discharged battery.

VANITY MIRROR LIGHTS

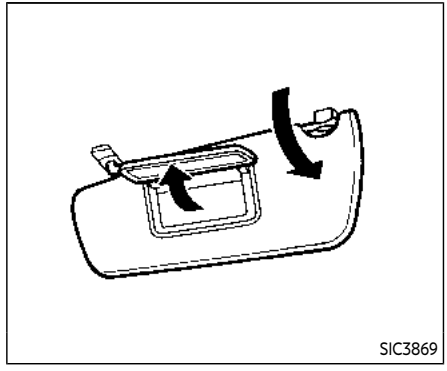

The light on the vanity mirror will turn on when the cover on the vanity mirror is opened.

When the cover is closed, the light will turn off.

The lights will also turn off after a period of time when the lights remain illuminated to prevent the battery from becoming discharged.

TRUNK LIGHT

The light illuminates when the trunk lid is opened. When the trunk lid is closed, the light will turn off.

The light will also turn off after a period of time when the light remains illuminated after the ignition switch has been pushed to the OFF or LOCK position to prevent the battery from becoming discharged.

COURTESY LIGHT

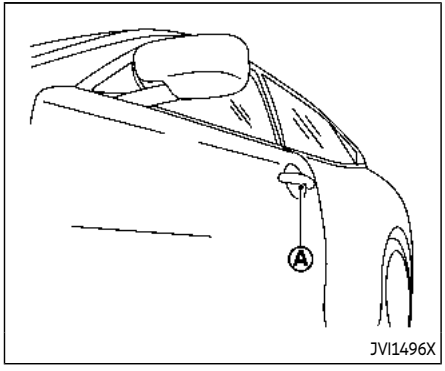

When the doors are unlocked by pushing the UNLOCK button on the Intelligent Key or touching the one touch unlock sensor with the ignition switch in the LOCK position, the courtesy light Ⓐ will illuminate.

To activate or deactivate the courtesy light, set [Lamp ON when Door Unlocks] on the lower display. See the INFINITI InTouch™ Owner's Manual.

HomeLink® UNIVERSAL TRANSCEIVER (if so equipped)

The HomeLink® Universal Transceiver provides a convenient way to consolidate the functions of up to three individual hand-held transmitters into one built-in device.

HomeLink® Universal Transceiver:

- Will operate most Radio Frequency (RF) devices such as garage doors, gates, home and office lighting, entry door locks and security systems.
- Is powered by your vehicle's battery. No separate batteries are required. If the vehicle's battery is discharged or is disconnected, HomeLink® will retain all programming.

When the HomeLink® Universal Transceiver is programmed, retain the original transmitter for future programming procedures (Example: new vehicle purchases). Upon sale of the vehicle, the programmed HomeLink® Universal Transceiver buttons should be erased for security purposes. For additional information, refer to "Programming HomeLink®" (P.2-60).

⚠ WARNING

- **Do not use the HomeLink® Universal Transceiver with any garage door opener that lacks safety stop and reverse features as required by federal safety standards. (These stan-**

dards became effective for opener models manufactured after April 1, 1982). A garage door opener which cannot detect an object in the path of a closing garage door and then automatically stop and reverse, does not meet current federal safety standards. Using a garage door opener without these features increases the risk of serious injury or death.

- **During the programming procedure your garage door or security gate will open and close (if the transmitter is within range). Make sure that people or objects are clear of the garage door, gate, etc. that you are programming.**
- **Your vehicle's engine should be turned off while programming the HomeLink® Universal Transceiver. Do not breathe exhaust gases; they contain colorless and odorless carbon monoxide. Carbon monoxide is dangerous. It can cause unconsciousness or death.**

PROGRAMMING HomeLink®

If you have any questions or are having difficulty programming your HomeLink® buttons, refer to the HomeLink® web site at: www.homelink.com or call 1-800-355-3515.

NOTE:

It is also recommended that a new battery be placed in the hand-held transmitter of the device being programmed to HomeLink® for quicker programming and accurate transmission of the radio-frequency.

1. Position the end of your hand-held transmitter 1-3 in (26-76 mm) away from the HomeLink® surface, keeping the HomeLink® indicator light ① in view.

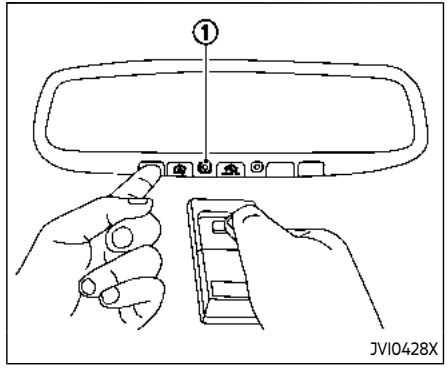

2. Using both hands, simultaneously press and hold the desired HomeLink® button and handheld transmitter button. DO NOT release until the HomeLink® indicator light ① flashes slowly and then rapidly. When the indicator light flashes rapidly, both buttons may be released. (The rapid flashing indicates successful programming.)

NOTE:
Some devices to be programmed may require you to replace Step 2 with the cycling procedure noted in the "Programming HomeLink® for Canadian customers and gate openers" (P.2-61).

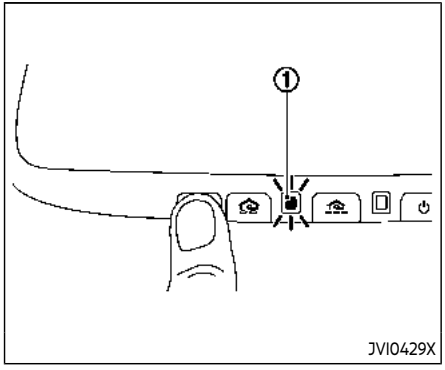

3. Press and hold the programmed HomeLink® button and observe the indicator light.
   - If the indicator light ① is solid/continuous, programming is complete and your device should activate when the HomeLink® button is pressed and released.
   - If the indicator light ① blinks rapidly for two seconds and then turns to a solid/continuous light, continue with Steps 4-6 for a rolling code device. A second person may make the following steps easier. Use a ladder or other device. Do not stand on your vehicle to perform the next steps.
4. At the receiver located on the garage door opener motor in the garage, locate the "learn" or "smart" button (the name and color of the button may vary by manufacturer but it is usually located near where the hanging antenna wire is attached to the unit). If there is difficulty locating the button, reference the garage door opener's manual.
5. Press and release the "learn" or "smart" button.

   NOTE:
   Once the button is pressed, you have approximately 30 seconds to initiate the next step.
6. Return to the vehicle and firmly press and hold the programmed HomeLink® button for two seconds and release. Repeat the "press/hold/release" sequence up to 3 times to complete the programming process. HomeLink® should now activate your rolling code equipped device.
7. If you have any questions or are having difficulty programming your HomeLink® buttons, refer to the HomeLink® web site at: www.homelink.com or call 1-800-355-3515.

PROGRAMMING HomeLink® FOR CANADIAN CUSTOMERS AND GATE OPENERS

Canadian radio-frequency laws require transmitter signals to "time-out" (or quit) after several seconds of transmission – which may not be long enough for HomeLink® to pick up the signal during programming. Similar to this Canadian law, some U.S. gate operators are designed to "time-out" in the same manner.

If you live in Canada or you are having difficulties programming a gate operator or garage door opener by using the "Programming HomeLink®" procedures, replace "Programming HomeLink®" Step 2 with the following:

NOTE:

When programming a garage door opener, etc., unplug the device during the "cycling" process to prevent possible damage to the garage door opener components.

Step 2: Using both hands, simultaneously press and hold the desired HomeLink® button and the hand-held transmitter button. During programming, your hand-held transmitter may automatically stop transmitting. Continue to press and hold the desired HomeLink® button while you press and re-press ("cycle") your hand-held trans-

mitter every two seconds until the frequency signal has been learned. The HomeLink® indicator light will flash slowly and then rapidly after several seconds upon successful programming. **DO NOT** release until the HomeLink® indicator light flashes slowly and then rapidly. When the indicator light flashes rapidly, both buttons may be released. The rapid flashing indicates successful programming.

Proceed with "Programming HomeLink®" step 3 to complete.

Remember to plug the device back in when programming is completed.

OPERATING THE HomeLink® UNIVERSAL TRANSCEIVER

The HomeLink® Universal Transceiver, after it is programmed, can be used to activate the programmed device. To operate, simply press and release the appropriate programmed HomeLink® Universal Transceiver button. The amber indicator light will illuminate while the signal is being transmitted.

For convenience, the hand-held transmitter of the device may also be used at any time.

PROGRAMMING TROUBLE-SHOOTING

If the HomeLink® does not quickly learn the hand-held transmitter information:

- replace the hand-held transmitter batteries with new batteries.
- position the hand-held transmitter with its battery area facing away from the HomeLink® surface.
- press and hold both the HomeLink® and hand-held transmitter buttons without interruption.
- position the hand-held transmitter 1-3 in (26-76 mm) away from the HomeLink® surface. Hold the transmitter in that position for up to 15 seconds. If HomeLink® is not programmed within that time, try holding the transmitter in another position - keeping the indicator light in view at all times.

If you have any questions or are having difficulty programming your HomeLink® buttons, refer to the HomeLink® web site at: www.homelink.com or 1-800-355-3515.

CLEARING THE PROGRAMMED INFORMATION

The following procedure clears the programmed information from both buttons. Individual buttons cannot be cleared. However, individual buttons can be reprogrammed, see "Reprogramming a single HomeLink® button" (P.2-62).

To clear all programming

1. Press and hold the two outer HomeLink® buttons until the indicator light begins to flash in approximately 10 seconds. Do not hold for longer than 20 seconds.
2. Release both buttons.

HomeLink® is now in the programming mode and can be programmed at any time beginning with "Programming HomeLink®" - Step 1.

REPROGRAMMING A SINGLE HomeLink® BUTTON

To reprogram a HomeLink® Universal Transceiver button, complete the following.

1. Press and hold the desired HomeLink® button. **Do not** release the button.
2. The indicator light will begin to flash after 20 seconds. Without releasing the HomeLink® button, proceed with "Programming HomeLink®" - Step 1.

For questions or comments, contact HomeLink® at: www.homelink.com or 1-800-355-3515.

The HomeLink® Universal Transceiver button has now been reprogrammed. The new device can be activated by pushing the HomeLink® button that was just programmed. This procedure will not affect any other programmed HomeLink® buttons.

IF YOUR VEHICLE IS STOLEN

If your vehicle is stolen, you should change the codes of any non-rolling code device that has been programmed into HomeLink®. Consult the Owner's Manual of each device or call the manufacturer or retailer of those devices for additional information.

When your vehicle is recovered, you will need to reprogram the HomeLink® Universal Transceiver with your new transmitter information.

FCC Notice:

For USA:

This device complies with Part 15 of the FCC Rules. Operation is subject to the following two conditions: (1) This device may not cause harmful interference, and (2) this device must accept any interference received, including interference that may cause undesired operation.

NOTE:

Changes or modifications not expressly approved by the party responsible for compliance could void the user's authority to operate the equipment.

For Canada:

This device complies with Industry Canada licence-exempt RSS standard(s). Operation is subject to the following two conditions: (1) this device may not cause interference, and (2) this device must accept any interference, including interference that may cause undesired operation of the device.

MEMO

3 Pre-driving checks and adjustments

Keys 3-2
Intelligent Key 3-2
Valet hand-off 3-4
Doors 3-4
Locking with mechanical key 3-4
Locking with inside lock knob 3-5
Locking with power door lock switch 3-5
Automatic door locks 3-5
Intelligent Key system 3-6
Intelligent Key operating range 3-8
Door locks/unlocks precaution 3-8
Intelligent Key operation 3-9
Battery saver system 3-13
Warning signals 3-13
Troubleshooting guide 3-14
Log-in function 3-15
Remote keyless entry system 3-15
How to use remote keyless entry system 3-16
Remote engine start (if so equipped) 3-19
Remote engine start operating range 3-20
Remote starting the engine 3-20
Extending engine run time 3-20
Canceling a remote engine start 3-21
Conditions the remote engine start will not work 3-21
Hood 3-22
Trunk lid 3-22
Trunk lid release switch 3-23
Trunk open request switch 3-23
TRUNK button 3-23
Trunk release power cancel switch 3-24
Interior trunk lid release 3-24
Fuel-filler door 3-25
Opening the fuel-filler door 3-25
Fuel-filler cap 3-25
Tilt/telescopic steering 3-27
Manual operation (if so equipped) 3-28
Electric operation (if so equipped) 3-28
Sun visors 3-29
Mirrors 3-29
Inside mirror 3-29
Outside mirrors 3-31
Vanity mirror 3-32
Automatic drive positioner (if so equipped) 3-33
Entry/exit function 3-33
Memory storage 3-33
System operation 3-34

KEYS

A key number plate is supplied with your keys. Record the key number and keep it in a safe place (such as your wallet), not in the vehicle. If you lose your keys, it is recommended you visit an INFINITI retailer for duplicates by using the key number. INFINITI does not record any key numbers so it is very important to keep track of your key number plate.

A key number is only necessary when you have lost all keys and do not have one to duplicate from. If you still have a key, it can be duplicated without knowing the key number.

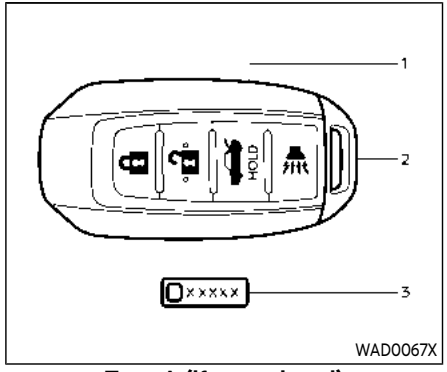

Type A (if so equipped)

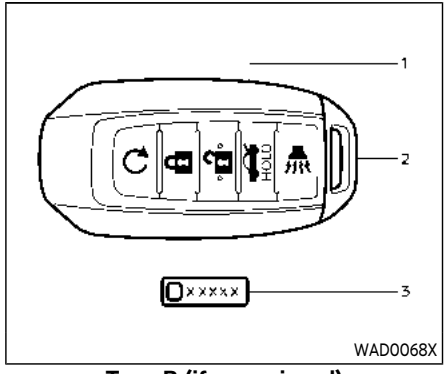

Type B (if so equipped)

1. Intelligent Keys (2)
2. Mechanical keys (inside the Keys) (2)
3. Key number plate (1)

INTELLIGENT KEY

Your vehicle can only be driven with the Intelligent Keys which are registered to your vehicle's Intelligent Key system components and INFINITI Vehicle Immobilizer System components. As many as 4 Intelligent Keys can be registered and used with one vehicle. The new keys must be registered by an INFINITI retailer prior to use with the Intelligent Key system and INFINITI Vehicle Immobilizer System of your vehicle. Since the registration process requires erasing all memory in the Intelligent Key components when registering new keys, be sure to take all Intelligent Keys that you have to the INFINITI retailer.

It is possible that the Intelligent Key functions become canceled. Contact an INFINITI retailer.

CAUTION

- **Be sure to carry the Intelligent Key with you when driving. The Intelligent Key is a precision device with a built-in transmitter. To avoid damaging it, please note the following.**

- **The Intelligent Key is water resistant; however, wetting may damage the Intelligent Key. If the Intelligent Key gets wet, immediately wipe until it is completely dry.**
- **Do not bend, drop or strike it against another object.**
- **If the outside temperature is below 14°F (-10°C), the battery of the Intelligent Key may not function properly.**
- **Do not place the Intelligent Key for an extended period in a place where temperatures exceed 140°F (60°C).**
- **Do not change or modify the Intelligent Key.**
- **Do not use a magnet key holder.**
- **Do not place the Intelligent Key near an electric appliance such as a television set or personal computer.**
- **Do not allow the Intelligent Key to come into contact with water or salt water, and do not wash it in a washing machine. This could affect the system function.**

- **If an Intelligent Key is lost or stolen, INFINITI recommends erasing the ID code of that Intelligent Key. This will prevent the Intelligent Key from unauthorized use to unlock the vehicle. For information regarding the erasing procedure, it is recommended you visit an INFINITI retailer.**

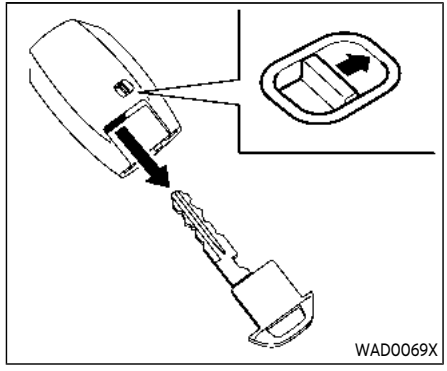

Mechanical key

To remove the mechanical key, release the lock knob at the back of the Intelligent Key.

To install the mechanical key, firmly insert it into the Intelligent Key until the lock knob returns to the lock position.

Use the mechanical key to lock or unlock the driver's door and glove box, if they are equipped with a key cylinder.

See "Doors" (P.3-4) and "Glove box" (P.2-50).

CAUTION

Always carry the mechanical key installed in the key.

VALET HAND-OFF

When you have to leave a key with a valet, give them the Intelligent Key itself and keep the mechanical key with you to protect your belongings.

To prevent the glove box and the trunk from being opened during valet hand-off, follow the procedures below.

1. Push the trunk release power cancel switch to the OFF (cancel) side.
2. Remove the mechanical key from the Intelligent Key.
3. Lock the glove box with the mechanical key.
4. Hand the Intelligent Key to the valet, keeping the mechanical key in your pocket or bag for insertion into the Intelligent Key when you retrieve your vehicle.

See “Trunk lid” (P.3-22) and “Glove box” (P.2-50).

WARNING

- **Always have the doors locked while driving. Along with the use of seat belts, this provides greater safety in the event of an accident by helping to prevent persons from being thrown from the vehicle. This also helps keep children and others from unintentionally opening the doors, and will help keep out intruders.**
- **Before opening any door, always look for and avoid oncoming traffic.**
- **To help avoid risk of injury or death through unintended operation of the vehicle and or its systems, including entrapment in windows or inadvertent door lock activation, do not leave children, people who require the assistance of others or pets unattended in your vehicle. Additionally, the temperature inside a closed vehicle on a warm day can quickly become high enough to cause a significant risk of injury or death to people and pets.**

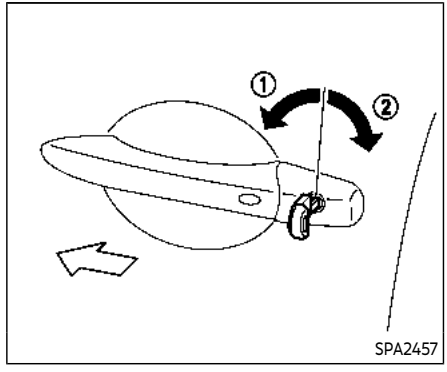

LOCKING WITH MECHANICAL KEY

To lock the driver’s door, turn the driver’s door key cylinder to the front of the vehicle ①.

To unlock the driver’s door, turn the driver’s door key cylinder to the rear of the vehicle ②.

To lock or unlock the other doors and the trunk lid, use the Intelligent Key function (one touch unlock sensor, request switch or UNLOCK button). (See “Intelligent Key system” (P.3-6).)

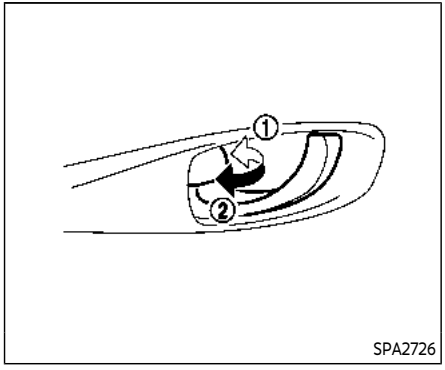

LOCKING WITH INSIDE LOCK KNOB

To lock the door individually, move the inside lock knob to the lock position ① then close the door.

To unlock, move the inside lock knob to the unlock position ②.

When locking the door without an Intelligent Key, be sure not to leave the Intelligent Key inside the vehicle.

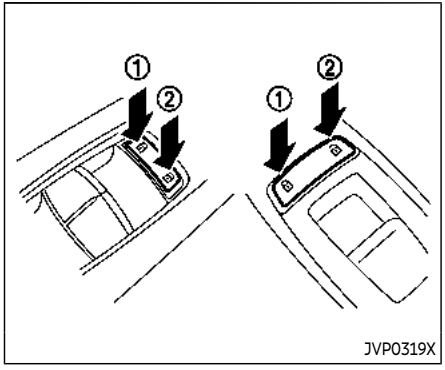

LOCKING WITH POWER DOOR LOCK SWITCH

Operating the power door lock switch will lock or unlock all the doors and trunk lid. The switches are located on the driver's and front passenger's door armrests.

To lock the doors and trunk lid, push the power door lock switch to the lock position ① with the driver's or front passenger's door open, then close the door.

When locking the door this way, be certain not to leave the Intelligent Key inside the vehicle.

To unlock the doors including the fuel-filler door and trunk lid, push the power door lock switch to the unlock position ②.

Lockout protection

When the power door lock switch is moved to the lock position and any door open, all doors will lock and unlock automatically. With the Intelligent Key left in the vehicle and any door open, all doors will unlock automatically and a chime will sound after the door is closed.

These functions help to prevent the Intelligent Key from being accidentally locked inside the vehicle.

AUTOMATIC DOOR LOCKS

- All doors and trunk lid lock automatically when the vehicle speed reaches 15 MPH (24 km/h).
- All doors and trunk lid unlock automatically when the ignition switch is placed in the OFF position or when the shift lever is moved to the P (Park) position, if selected.

The automatic unlock function can be deactivated or activated. To deactivate or activate the automatic door unlock system, perform the following procedure:

1. Close all doors.
2. Place the ignition switch in the ON position.

3. Within 20 seconds of performing Step 2, push and hold the power door lock switch to the 🔓 position (UNLOCK) for more than 5 seconds.
4. When activated, the hazard indicator will flash twice. When deactivated, the hazard indicator will flash once.
5. The ignition switch must be placed in the OFF and ON position again between each setting change.

When the automatic door unlock system is deactivated, the doors do not unlock when the ignition switch is placed in the OFF position. To unlock the door manually, use the inside lock knob or the power door lock switch (driver's or front passenger's side).

The automatic door unlock function can be changed on the lower display. (See the INFINITI InTouch™ Owner's Manual.)

⚠ WARNING

- **Radio waves could adversely affect electric medical equipment. Those who use a pacemaker should contact the electric medical equipment manufacturer for the possible influences before use.**
- **The Intelligent Key transmits radio waves when the buttons are pushed. The FAA advises that the radio waves may affect aircraft navigation and communication systems. Do not operate the Intelligent Key while on an airplane. Make sure the buttons are not operated unintentionally when the unit is stored during a flight.**

The Intelligent Key system can operate all the doors and the trunk lid using the remote controller function, using one touch unlock function or pushing the request switch on the vehicle without taking the key out from a pocket or purse. The operating environment and/or conditions may affect the Intelligent Key system operation.

Be sure to read the following before using the Intelligent Key system.

⚠ CAUTION

- **Be sure to carry the Intelligent Key with you when operating the vehicle.**
- **Never leave the Intelligent Key in the vehicle when you leave the vehicle.**

The Intelligent Key is always communicating with the vehicle as it receives radio waves. The Intelligent Key system transmits weak radio waves. Environmental conditions may interfere with the operation of the Intelligent Key system under the following operating conditions.

- When operating near a location where strong radio waves are transmitted, such as a TV tower, power station and broadcasting station.
- When in possession of wireless equipment, such as a cellular telephone, transceiver, and CB radio.
- When the Intelligent Key is in contact with or covered by metallic materials.
- When any type of radio wave remote control is used nearby.
- When the Intelligent Key is placed near an electric appliance such as a personal computer.

- When the vehicle is parked near a parking meter.

In such cases, correct the operating conditions before using the Intelligent Key function or use the mechanical key.

Although the life of the battery varies depending on the operating conditions, the battery's life is approximately 2 years. If the battery is discharged, replace it with a new one.

When the Intelligent Key battery is almost discharged, see "Intelligent Key battery discharge" (P.5-14) to start the engine.

Since the Intelligent Key is continuously receiving radio waves, if the key is left near equipment which transmits strong radio waves, such as signals from a TV and personal computer, the battery life may become shorter.

For information regarding replacement of a battery, see "Intelligent Key battery replacement" (P.8-19).

As many as 4 Intelligent Keys can be registered and used with one vehicle. For information about the purchase and use of additional Intelligent Keys, contact an INFINITI retailer.

CAUTION

- **Do not allow the Intelligent Key, which contains electrical components, to come into contact with water or salt water. This could affect the system function.**
- **Do not drop the Intelligent Key.**
- **Do not strike the Intelligent Key sharply against another object.**
- **Do not change or modify the Intelligent Key.**
- **Wetting may damage the Intelligent Key. If the Intelligent Key gets wet, immediately wipe until it is completely dry.**
- **Do not place the Intelligent Key for an extended period in an area where temperatures exceed 140°F (60°C).**
- **If the outside temperature is below 14°F (-10°C), the battery of the Intelligent Key may not function properly.**
- **Do not attach the Intelligent Key with a key holder that contains a magnet.**
- **Do not place the Intelligent Key near equipment that produces a magnetic field, such as a TV, audio equipment and personal computers.**

If an Intelligent Key is lost or stolen, INFINITI recommends erasing the ID code of that Intelligent Key from the vehicle. This may prevent the unauthorized use of the Intelligent Key to operate the vehicle. For information regarding the erasing procedure, contact an INFINITI retailer.

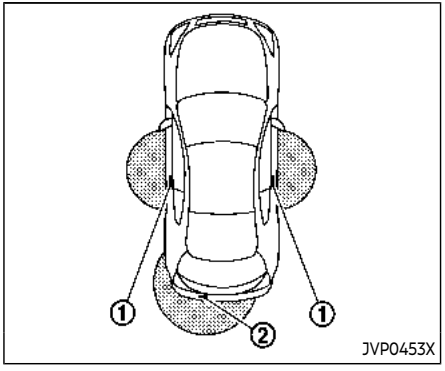

INTELLIGENT KEY OPERATING RANGE

The Intelligent Key functions can only be used when the Intelligent Key is within the specified operating range from the one touch unlock sensor/door request switch ① and trunk open request switch ②.

When the Intelligent Key battery is discharged or strong radio waves are present near the operating location, the Intelligent Key system's operating range becomes narrower, and the Intelligent Key may not function properly.

The operating range is within 31.50 in (80 cm) from each one touch unlock sensor/door handle request switch ① and trunk open request switch ②.

If the Intelligent Key is too close to the door glass, handle or rear bumper, the one touch unlock sensor and request switches may not function.

When the Intelligent Key is within the operating range, it is possible for anyone who does not carry the Intelligent Key to use the one touch unlock sensor or request switches to lock or unlock the doors and open the trunk lid.

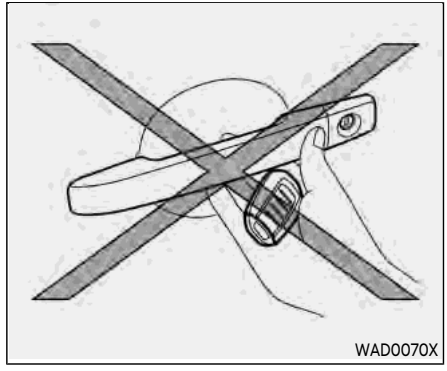

DOOR LOCKS/UNLOCKS PRECAUTION

- Do not push the door handle request switch with the Intelligent Key held in your hand as illustrated. The close distance to the door handle will cause the Intelligent Key system to have difficulty recognizing that the Intelligent Key is outside the vehicle.
- Within 2 seconds after the door are locked using the door handle request switch, make sure that the doors have been securely locked by operating the door handles. If you keep holding the door handle for more than 2 seconds after locking the doors using the door

handle request switch, the door will be unlocked.

- To prevent the Intelligent Key from being left inside the vehicle or the trunk, make sure you carry the key with you and then lock the doors or the trunk.
- The Intelligent Key system (opening/closing doors with the door handle request switch or one touch unlock sensor) can be set to remain inactive. (See the INFINITI InTouch™ Owner's Manual.)
- The door cannot be unlocked using one touch unlock operation after locking the door within 2 seconds. To unlock the door, release the one touch unlock sensor once and touch it again.
- If a large amount of water runs down on the door handle (for example, when washing the vehicle or in a heavy rain), the door may unlock if the Intelligent Key is within the range of operation. To prevent the door from being unlocked, the Intelligent Key should be away from the vehicle more than 7 ft (2 m).
- Do not hold and pull the door handle quickly. The door will be unlocked but will not open. Release the door handle once and pull it again to open the door.
- If you pull the door handle with your gloved hand, the one touch unlock operation may not function.

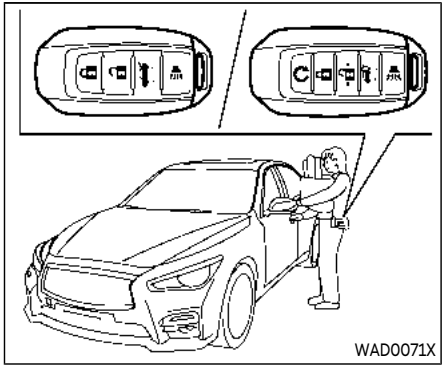

INTELLIGENT KEY OPERATION

You can lock or unlock the doors without taking the key out from your pocket or bag.

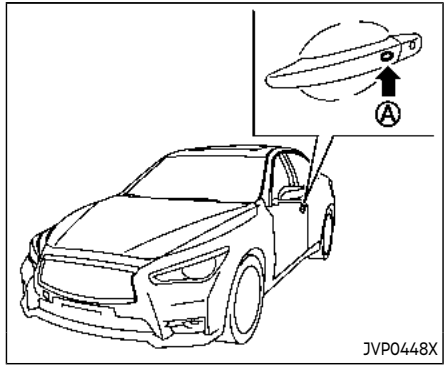

When you carry the Intelligent Key with you, you can lock all doors by pushing the door handle request switch Ⓐ (driver's or front passenger's) within the range of operation.

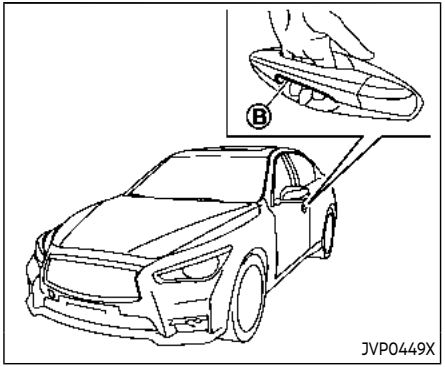

You can also unlock the corresponding door by touching the one touch unlock sensor Ⓑ (driver's or front passenger's) within the range of operation, and can unlock the other doors using the door handle request switch Ⓐ.

When you lock or unlock the doors or the trunk lid, the hazard indicator will flash and the horn (or the outside chime) will sound as a confirmation. For details, see "Setting hazard indicator and horn mode" (P.3-18).

CAUTION

- **After locking the doors using the request switch, make sure that the doors have been securely locked by operating the door handles.**
- **When locking the doors using the request switch, make sure to have the Intelligent Key in your possession before operating the request switch to prevent the Intelligent Key from being left in the vehicle.**
- **The request switch and one touch unlock sensor are operational only when the Intelligent Key has been detected by the Intelligent Key system.**

Welcome light and farewell light function

When you lock or unlock the doors and fuel-filler door, front and rear side marker lights, parking lights, tail lights and the license plate light will illuminate for a period of time. The welcome light and farewell light function can be disabled. For information about disabling the welcome light and farewell light function, see the INFINITI InTouch™ Owner's Manual.

Lockout protection

To prevent the Intelligent Key from being accidentally locked in the vehicle, lockout protection is equipped with the Intelligent Key system.

When the driver's side door is open, the doors are locked, and then the Intelligent Key is put inside the vehicle and all the doors are closed; the lock will automatically unlock and the door buzzer sounds.

NOTE:

The doors may not lock when the Intelligent Key is in the same hand that is operating the request switch to lock the door. Put the Intelligent Key in a purse, pocket or your other hand.

CAUTION

The lockout protection may not function under the following conditions:

- **When the Intelligent Key is placed on top of the instrument panel.**
- **When the Intelligent Key is placed inside the glove box or a storage bin.**
- **When the Intelligent Key is placed inside the door pockets.**
- **When the Intelligent Key is placed**

inside or near metallic materials.

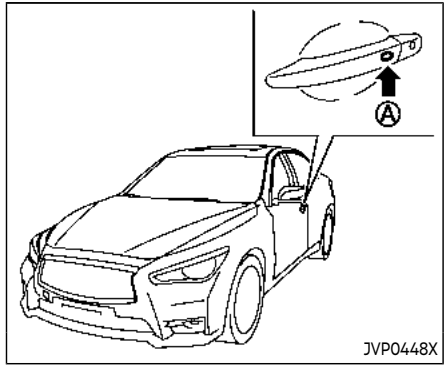

Locking doors, trunk lid and fuel-filler door

1. Push the ignition switch to the OFF position and make sure you carry the Intelligent Key with you.*1
2. Close all the doors.*2
3. Push the door handle request switch (driver's or front passenger's) Ⓐ while carrying the Intelligent Key with you.*3
4. All the doors, trunk lid and fuel-filler door will lock.
5. The hazard indicator flashes twice and the outside chime sounds twice.

*1: Doors will lock with the Intelligent Key while the ignition switch is in the ACC or ON position.

*2: Doors will not lock with the Intelligent Key while the driver's door is open.

*3: Doors will not lock by pushing the door handle request switch with the Intelligent Key inside the vehicle. However, when an Intelligent Key is inside the vehicle, doors can be locked with another registered Intelligent Key.

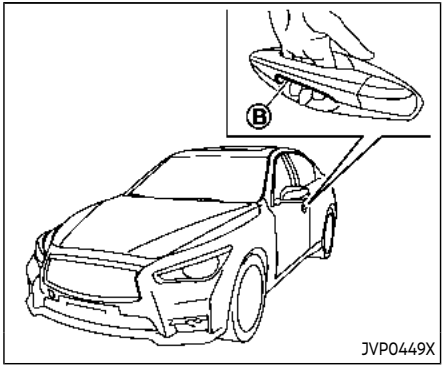

Unlocking doors and fuel-filler door

1. Touch the one touch unlock sensor Ⓑ (driver's or front passenger's) while carrying the Intelligent Key with you.
2. The hazard indicator flashes once and the outside chime sounds once. The corresponding door will unlock.
3. Push the door handle request switch Ⓐ within 1 minute.
4. The hazard indicator flashes once and the outside chime sounds once again. All the doors, trunk lid and fuel-filler door will unlock.

All doors, trunk lid and fuel-filler door will be locked automatically unless one of the following operations is performed within 1 minute after pushing the request switch or touch unlock operation while the doors are locked.

- Opening any door
- Pushing the ignition switch

During this 1-minute time period, if the UNLOCK button on the Intelligent Key is pushed, all doors will be locked automatically after another 1 minute.

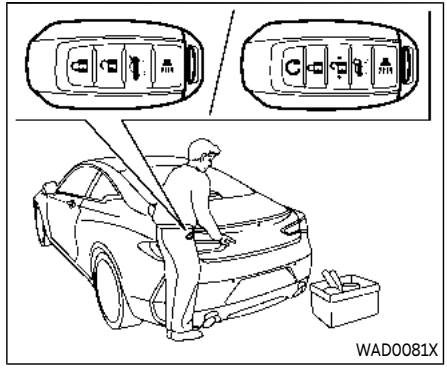

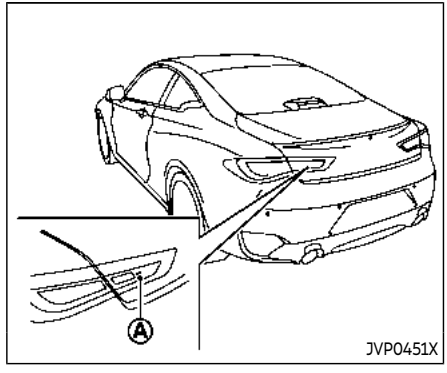

Opening trunk lid

1. Push the trunk open request switch Ⓐ for more than 1 second while carrying the Intelligent Key with you.
2. The trunk will unlatch. An outside chime will sound four times.
3. Raise the trunk lid to open the trunk.

Lockout protection:

To prevent the Intelligent Key from being accidentally locked in the trunk, lockout protection is equipped with the Intelligent Key system.

When the trunk lid is closed with the Intelligent Key inside the trunk, the outside chime will sound and the trunk will open.

BATTERY SAVER SYSTEM

When all the following conditions are met for a period of time, the battery saver system will cut off the power supply to prevent battery discharge.

- The ignition switch is in the ACC position, and
- All doors are closed, and
- The shift lever is in the P (Park) position.

WARNING SIGNALS

To help prevent the vehicle from moving unexpectedly by erroneous operation of the Intelligent Key listed on the following chart or to help prevent the vehicle from being stolen, chime or beep sounds inside and outside the vehicle and a warning displays in the vehicle information display.

When a chime or beep sounds or the warning displays, be sure to check the vehicle and Intelligent Key.

See "Troubleshooting guide" (P.3-14) and "Vehicle information display" (P.2-20).

TROUBLESHOOTING GUIDE

Symptom		Possible cause	Action to take
When pushing the ignition switch to stop the engine	The SHIFT P warning appears on the display and the inside warning chime sounds continuously.	The shift lever is not in the P (Park) position.	Shift the shift lever to the P (Park) position.
When shifting the shift lever to the P (Park) position.	The inside warning chime sounds continuously.	The ignition switch is in the ACC or ON position.	Push the ignition switch to the OFF position.
When opening the driver's door to get out of the vehicle	The inside warning chime sounds continuously.	The ignition switch is in the ACC position.	Push the ignition switch to the OFF position.
When closing the door after getting out of the vehicle	The NO KEY warning appears on the display, the outside chime sounds 3 times and the inside warning chime sounds for a few seconds.	The ignition switch is in the ACC or ON position.	Push the ignition switch to the OFF position.
	The SHIFT P warning appears on the display and the outside chime sounds continuously.	The ignition switch is in the ACC or OFF position and the shift lever is not in the P (Park) position.	Move the shift lever to the P (Park) position and push the ignition switch to the OFF position.
When closing the door with the inside lock knob turned to LOCK	The outside chime sounds for a few seconds and all the doors unlock.	The Intelligent Key is inside the vehicle or trunk.	Carry the Intelligent Key with you.
When pushing the request switch or LOCK button on the Intelligent Key to lock the door	The outside chime sounds for a few seconds.	The Intelligent Key is inside the vehicle or trunk.	Carry the Intelligent Key with you.
		A door is not closed securely.	Close the door securely.
When closing the trunk lid	The outside chime sounds for approximately 10 seconds and the trunk lid opens.	The Intelligent Key is inside the trunk.	Carry the Intelligent Key with you.

LOG-IN FUNCTION

After setting up the user information, the system will automatically recognize the user upon turning on the vehicle.

There will be a personalized welcome greeting and screen prompt to log-in.

This feature allows 4 drivers to use their own registration, drive mode, driving position, air conditioner, and auto settings and memorizes these custom settings.

The log-in user can be changed on the welcome greeting screen or User Profiles screen. For more details, see the INFINITI InTouch™ Owner's Manual.

The log-in function is linked to the following items:

- Meter
- Audio
- Navigation system display (if so equipped)
- Navigation settings (if so equipped)
- Air conditioner
- Automatic drive positioner (if so equipped)
- Engine/Transmission
- Steering
- Suspension (if so equipped)
- Active trace control system
- Driver assistance* (if so equipped)
- Vehicle settings

*: except for the Forward Emergency Braking (FEB) with pedestrian detection system

WARNING

The Intelligent Key transmits radio waves when the buttons are pushed. The FAA advises that the radio waves may affect aircraft navigation and communication systems. Do not operate the Intelligent Key while on an airplane. Make sure the buttons are not operated unintentionally when the unit is stored during a flight.

It is possible to lock/unlock all doors and fuel-filler door, open the trunk lid, activate the panic alarm and open the windows by pushing the buttons on the Intelligent Key from outside the vehicle.

Before locking the doors, make sure the Intelligent Key is not left in the vehicle.

The remote keyless entry function can operate at a distance of approximately 33 ft (10 m) from the vehicle. (The effective distance depends upon the conditions around the vehicle.)

As many as 4 Intelligent Keys can be used with one vehicle. For information concerning the purchase and use of additional Intelligent Keys, contact an INFINITI retailer.

The buttons on the Intelligent Key will not

operate when:

- the distance between the Intelligent Key and the vehicle is over 33 ft (10 m).
- the Intelligent Key battery is discharged.

After locking with the remote keyless entry function, pull the door handle to make sure the doors are securely locked.

The LOCK/UNLOCK operating range varies depending on the environment. To securely operate the lock and unlock buttons, approach the vehicle to about 3 ft (1 m) from the door.

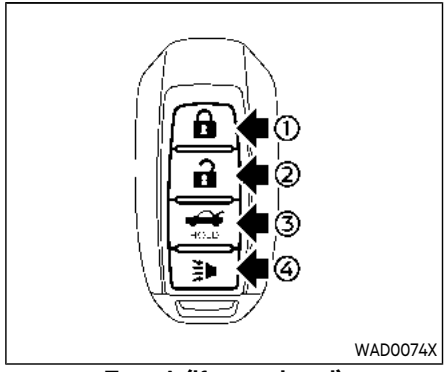

Type A (if so equipped)

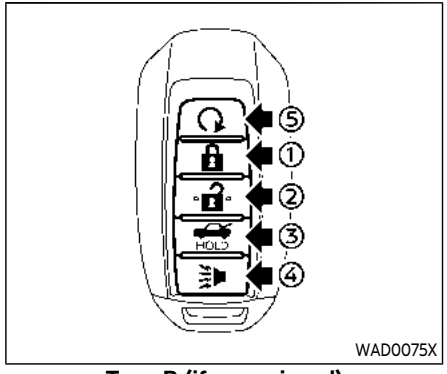

Type B (if so equipped)

① LOCK button
② UNLOCK button
③ TRUNK button
④ PANIC button
⑤ Remote engine start button

HOW TO USE REMOTE KEYLESS ENTRY SYSTEM

When you lock or unlock the doors or the trunk lid, the hazard indicator will flash and the horn (or the outside chime) will sound as a confirmation. For details, see "Setting hazard indicator and horn mode" (P.3-18).

Locking doors, trunk lid and fuel-filler door

1. Push the ignition switch to the OFF position and make sure you carry the Intelligent Key with you.*1
2. Close all the doors.
3. Push the LOCK button ① on the Intelligent Key.
4. All the doors, trunk lid and fuel-filler door will lock.
5. The hazard indicator flashes twice and the horn chirps once.

*1: Doors will lock with the Intelligent Key while the ignition switch is in the ACC or ON position.

Unlocking doors, trunk lid and fuel-filler door

1. Push the UNLOCK button ② on the Intelligent Key once.
2. The hazard indicator flashes once. The driver's door will unlock.
3. Push the UNLOCK button ② on the Intelligent Key again within 1 minute.
4. The hazard indicator flashes once again. All the doors, trunk lid and the fuel-filler door will unlock.

All doors, trunk lid and the fuel-filler door will be locked automatically unless one of the following operations is performed within 1 minute after pushing the UNLOCK ② button on the Intelligent Key while the doors are locked. If during this 1-minute time period, the UNLOCK ② button on the Intelligent Key is pushed, all doors will be locked automatically after another 1 minute.

- Opening any door
- Pushing the ignition switch

Opening windows (if so equipped)

The UNLOCK button ② operation also allows you to open the window that is equipped with the automatic open/close function. (See "Power windows" (P.2-52).)

To open the window, push the door UNLOCK ② button on the Intelligent Key for **about 3 seconds** after the door is unlocked.

To stop opening, release the UNLOCK button ②.

If the window open operation is stopped in mid-operation while pushing the UNLOCK button ② , release and push the UNLOCK button ② again until the window opens completely.

Window cannot be closed using the Intelligent Key.

Opening moonroof (if so equipped)

The moonroof can be opened by pushing the UNLOCK button ② on the Intelligent Key. This function will not operate while the moonroof timer is activated or when the moonroof needs to be initialized.

To open the moonroof, push the UNLOCK button ② on the Intelligent Key for about 3 seconds after the door is unlocked.

To stop opening, release the UNLOCK button ②.

Opening trunk lid

1. Push the TRUNK button ③ on the Intelligent Key for more than 1 second.
2. The trunk will unlatch.
3. Raise the trunk lid to open the trunk.

Using panic alarm

If you are near your vehicle and feel threatened, you may activate the alarm to call attention as follows:

1. Push the PANIC button ④ on the key for **more than 1 second.**
2. The theft warning alarm and headlights will stay on for 25 seconds.
3. The panic alarm stops when:
   - It has run for 25 seconds, or
   - Any of the buttons on the Intelligent Key are pushed. (Note: PANIC button ④ or TRUNK button ③ should be pushed for more than 1 second.)

Remote engine start (if so equipped)

The remote engine start button ⑤ is on the Intelligent Key if the vehicle has remote engine start function. This function allows the engine to start from outside the vehicle. See "Remote engine start" (P.3-19) for more details.

Setting hazard indicator and horn mode

This vehicle is set in hazard indicator and horn mode when you first receive the vehicle.

In hazard indicator and horn mode, when the LOCK button ① is pushed, the hazard indicator flashes twice and the horn chirps once. When the UNLOCK button ② is pushed, the hazard indicator flashes once.

If horns are not necessary, the system can be switched to the hazard indicator mode.

In hazard indicator mode, when the LOCK button ① is pushed, the hazard indicator flashes twice. When the UNLOCK button ② is pushed, neither the hazard indicator nor the horn operates.

Hazard indicator and horn mode:

	DOOR LOCK	DOOR UNLOCK	TRUNK UNLOCK
Intelligent Key system (Using door handle or trunk request switch)	HAZARD - **twice** OUTSIDE CHIME - **twice**	HAZARD - **once** OUTSIDE CHIME - **once**	HAZARD - none OUTSIDE CHIME - **4 times**
Remote keyless entry system (Using , or button)	HAZARD - **twice** HORN - **once**	HAZARD - **once** HORN - none	HAZARD - none HORN - none

Hazard indicator mode:

	DOOR LOCK	DOOR UNLOCK	TRUNK UNLOCK
Intelligent Key system (Using door handle or trunk request switch)	HAZARD - **twice** OUTSIDE CHIME - none	HAZARD - none OUTSIDE CHIME - none	HAZARD - none OUTSIDE CHIME - none
Remote keyless entry system (Using , or button)	HAZARD - **twice** HORN - none	HAZARD - none HORN - none	HAZARD - none HORN - none

Switching procedure:

To switch the hazard indicator and horn (chime) operation, push the LOCK ① and UNLOCK ② buttons on the Intelligent Key simultaneously for more than 2 seconds.

- When the hazard indicator mode is set, the hazard indicator flashes 3 times.
- When the hazard indicator and horn mode is set, the hazard indicator flashes once and the horn chirps once.

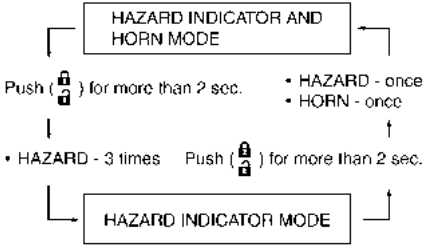

WARNING

To avoid risk of injury or death, do not use the remote engine start function when the vehicle is in an enclosed area such as a garage.

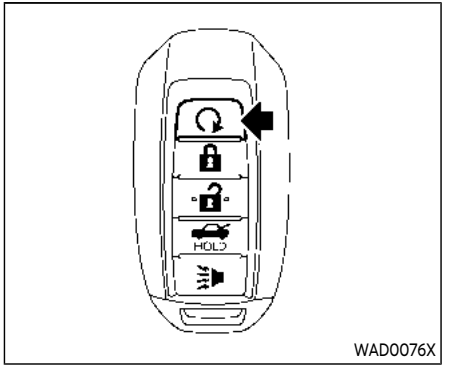

The remote engine start button is on the Intelligent Key if the vehicle has remote engine start function. This function allows the engine to start from outside the vehicle.

Automatic climate control system will automatically adjust the passenger compartment to be the set appropriate temperature when the remote engine start function is used.

Laws in some local communities may restrict the use of remote engine starters. For example, some laws require a person using remote engine start to have the vehicle in view. Check local regulations for any requirements.

Other conditions may affect the remote engine start function. See "Conditions the

remote engine start will not work" (P.3-21).

Other conditions can affect the performance of the Intelligent Key transmitter. See "Intelligent Key system" (P.3-6) for additional information.

REMOTE ENGINE START OPERATING RANGE

The remote engine start function can only be used when the Intelligent Key is within the specified operating range from the vehicle.

When the Intelligent Key battery is discharged or other strong radio wave sources are present near the operating location, the Intelligent Key operating range becomes narrower, and the Intelligent Key may not function properly.

The remote engine start operating range is approximately 197 ft (60 m) from the vehicle.

REMOTE STARTING THE ENGINE

To use the remote start function to start the engine, perform the following:

1. Aim the Intelligent Key at the vehicle.
2. Push the LOCK button to lock all doors.
3. Within 5 seconds push and hold the remote engine start button until the turn signal lights flash and the tail lights illuminate. If the vehicle is not within view, push and hold the remote engine start button for at least 2 seconds.

The following events will occur when the engine starts:

- The front parking lights will turn on and remain on as long as the engine is running.
- The doors will be locked and the air conditioner system may turn on.
- The engine will continue to run for about 10 minutes. Repeat the steps to extend the time for an additional 10 minutes. See "Extending engine run time" (P.3-20).
- The rear window glass and outside mirror defroster may turn on automatically when the outside air temperature, the interior temperature and the engine coolant temperature are low.

Depress and hold the brake pedal, then place the ignition switch in the ON position before driving. For further instructions, see "Driving the vehicle" (P.5-16).

EXTENDING ENGINE RUN TIME

The remote engine start function can be extended one time by performing the steps listed in "Remote starting the engine" (P.3-20). Run time will be calculated as follows:

- The first 10 minute run time will start when the remote engine start function is performed.
- The second 10 minutes will start immediately when the remote engine start function is performed. For example, if the engine has been running for 5 minutes, and 10 minutes are added, the engine will run for a total of 15 minutes.
- Extending engine run time will count towards the two remote engine start limit.

A maximum of two remote engine starts, or a single start with an extension, are allowed between ignition cycles.

The ignition switch must be cycled to the ON position and then back to the OFF position before the remote engine start procedure can be used again.

CANCELING A REMOTE ENGINE START

To cancel a remote engine start, perform one of the following:

- Aim the Intelligent Key at the vehicle and push and hold the remote engine start button until the parking lights turn off.
- Turn on the hazard warning flashers.
- Cycle the ignition switch ON and then OFF.
- The extended engine run time has expired.
- The first 10 minute timer has expired.
- The engine hood has been opened.
- The shift lever is moved out of P (Park).
- The alarm sounds due to illegal entry into the vehicle.
- The ignition switch is pushed without an Intelligent Key in the vehicle.
- The ignition switch is pushed with an Intelligent Key in the vehicle but the brake pedal is not depressed.

CONDITIONS THE REMOTE ENGINE START WILL NOT WORK

The remote engine start will not operate if any of the following conditions are present:

- The ignition switch is placed in the ON position.
- The hood is not securely closed.
- The hazard warning lights are on.
- The engine is still running. The engine must be completely stopped. Wait at least 6 seconds if the engine goes from running to off. This is not applicable when extending engine run time.
- The remote engine start button is not pushed and held for at least 2 seconds.
- The remote engine start button is not pushed and held within 5 seconds of pushing LOCK button.
- The brake pedal is depressed.
- The doors are not closed and locked.
- The trunk is open.
- The Intelligent Key warning message is displayed in the vehicle information display.
- The alarm sounds due to illegal entry into the vehicle.
- Two remote engine starts, or a single remote engine start with an extension, have already been used.
- The vehicle is not in P (Park).
- The remote engine start function has been switched to OFF in the settings menu on the lower display. For additional information, see the INFINITI InTouch™ Owner's Manual.

The remote engine start may display a warning or indicator in the vehicle information display. For an explanation of the warning or indicator, see "Indicators for operation" (P.2-23).

HOOD

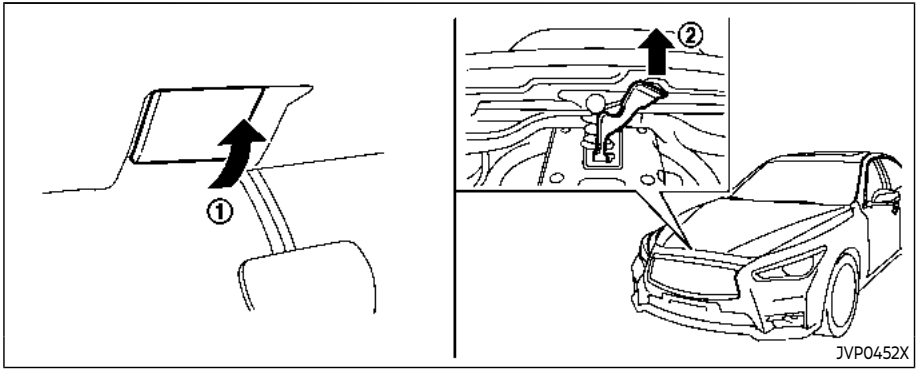

1. Pull the hood lock release handle ① located below the instrument panel; the hood will then spring up slightly.
2. Pull the lever ② up at the front of the hood with your fingertips and raise the hood.
3. When closing the hood, slowly close the hood down to latch both the right and left locks. Push the hood down to lock the hood securely into place.

WARNING

- **Make sure the hood is completely closed and latched before driving. Failure to do so could cause the hood to fly open and result in an accident.**
- **If you see steam or smoke coming from the engine compartment, to avoid injury do not open the hood.**

TRUNK LID

WARNING

- **Do not drive with the trunk lid open. This could allow dangerous exhaust gases to be drawn into the vehicle. See "Exhaust gas (carbon monoxide)" (P.5-4) of this manual.**
- **Closely supervise children when they are around cars to prevent them from playing and becoming locked in the trunk where they could be seriously injured. Keep the car locked, with the trunk closed, when not in use, and prevent children's access to Intelligent Keys.**

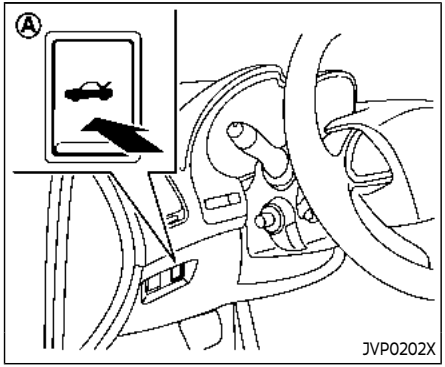

TRUNK LID RELEASE SWITCH

The trunk lid release switch Ⓐ is located on the instrument panel.

To open the trunk lid, push the release switch. To close, push the trunk lid down.

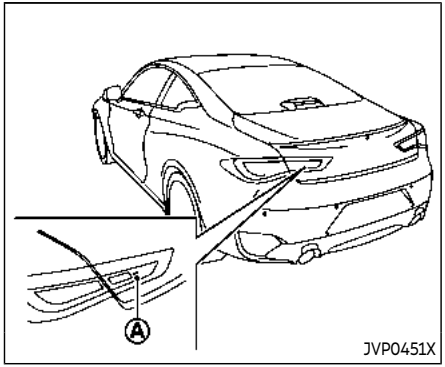

TRUNK OPEN REQUEST SWITCH

The trunk lid can be opened by pushing the trunk open request switch Ⓐ when the Intelligent Key is within the operating range of the trunk lock/unlock function regardless of the inside lock knob position.

The trunk lid can be opened by pushing the trunk open request switch Ⓐ even if the Intelligent Key is not within the operating range of the trunk lock/unlock function, when all doors are unlocked by the power door lock system, and the automatic unlock function.

(See “Intelligent Key system” (P.3-6).)

TRUNK BUTTON

The trunk lid can be opened by pushing the TRUNK button on the Intelligent Key for more than 1 second.

The trunk lid can be opened by pushing the trunk open request switch Ⓐ even if the Intelligent Key is not within the operating range of the trunk lock/unlock function, when all doors are unlocked by the power door lock system, and the automatic unlock function.

(See “Remote keyless entry system” (P.3-15).)

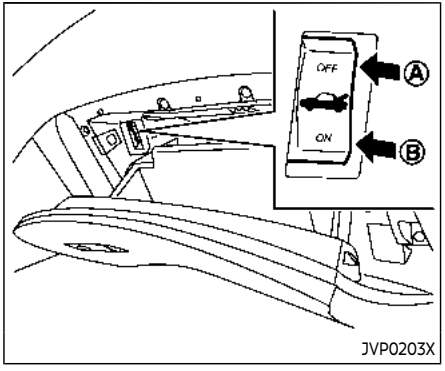

TRUNK RELEASE POWER CANCEL SWITCH

When the switch located inside the glove box is in the OFF position Ⓐ, the power to the trunk lid will be canceled and the trunk lid cannot be opened by the trunk lid release switch, the trunk open request switch or the TRUNK button on the Intelligent Key.

When you have to leave the vehicle with a valet and want to keep your belongings safe in the glove box and the trunk, push this switch to OFF and lock the glove box with the mechanical key. Then leave the vehicle and the Intelligent Key with the valet and keep the mechanical key with you.

(See “Keys” (P.3-2).)

To connect the power to the trunk lid, push the switch to the ON Ⓑ position.

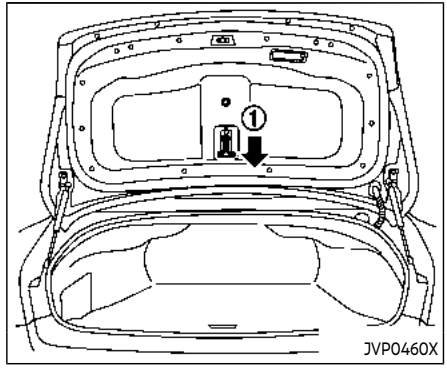

INTERIOR TRUNK LID RELEASE

WARNING

Closely supervise children when they are around cars to prevent them from playing and becoming locked in the trunk where they could be seriously injured. Keep the car locked, with the trunk lid securely latched, when not in use, and prevent children’s access to Intelligent Keys.

The interior trunk lid release mechanism allows opening of the trunk lid in the event

that people become locked inside the trunk.

Releasing inside the trunk

To open the trunk lid from the inside, pull the release handle ① until the lock releases and push up on the trunk lid. The release lever is made of a material that glows in the dark after a brief exposure to ambient light.

The handle is located on the back of the trunk lid as illustrated.

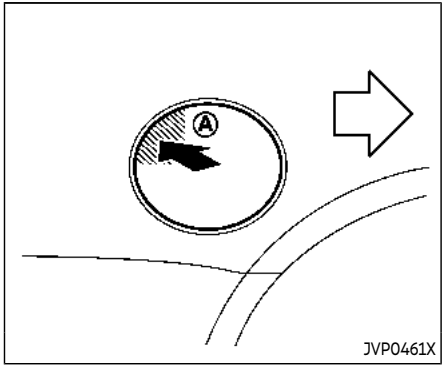

OPENING THE FUEL-FILLER DOOR

To open the fuel-filler door, unlock the fuel-filler door by using one of the following operations, then push the upper left side of the door Ⓐ.

- Touch the one touch unlock sensor on one of the door handles and then push the door handle request switch while carrying the Intelligent Key.
- Push the UNLOCK button on the Intelligent Key twice.
- Push the power door lock switch to the UNLOCK position.

To lock, close the fuel-filler door securely and lock all doors by operating the door handle request switch, the LOCK button on the Intelligent Key or the power door lock switch.

FUEL-FILLER CAP

WARNING

- **Gasoline is extremely flammable and highly explosive under certain conditions. You could be burned or seriously injured if it is misused or mishandled. Always stop engine and do not smoke or allow open flames or sparks near the vehicle when refueling.**
- **Do not attempt to top off the fuel tank after the fuel pump nozzle shuts off automatically. Continued refueling may cause fuel overflow, resulting in fuel spray and possibly a fire.**
- **Use only an original equipment type fuel-filler cap as a replacement. It has a built-in safety valve needed for proper operation of the fuel system and emission control system. An incorrect cap can result in a serious malfunction and possible injury. It could also cause the Malfunction**

Indicator Light (MIL) to come on.

- **Never pour fuel into the throttle body to attempt to start your vehicle.**
- **Do not fill a portable fuel container in the vehicle or trailer. Static electricity can cause an explosion of flammable liquid, vapor or gas in any vehicle or trailer. To reduce the risk of serious injury or death when filling portable fuel containers:**
  - **Always place the container on the ground when filling.**
  - **Do not use electronic devices when filling.**
  - **Keep the pump nozzle in contact with the container while you are filling it.**
  - **Use only approved portable fuel containers for flammable liquid.**

CAUTION

- **If fuel is spilled on the vehicle body, flush it away with water to avoid paint damage.**
- **Insert the cap straight into the fuel-filler tube, then tighten the fuel-filler cap until a single click is heard. Failure to tighten the fuel-filler cap properly may cause the Malfunction Indicator Light (MIL) to illuminate. If the light illuminates because the fuel-filler cap is loose or missing, tighten or install the cap and continue to drive the vehicle. The light should turn off after a few driving trips. If the light does not turn off after a few driving trips, have the vehicle inspected. It is recommended you visit an INFINITI retailer for this service.**
- **The Loose Fuel Cap warning will appear if the fuel-filler cap is not properly tightened. It may take a few driving trips for the warning to be displayed. Failure to tighten the fuel-filler cap properly after the Loose Fuel Cap warning appears may cause the Malfunction Indicator Light (MIL) to illuminate.**
- **For additional information, see "Malfunction Indicator Light (MIL)" (P.2-18).**

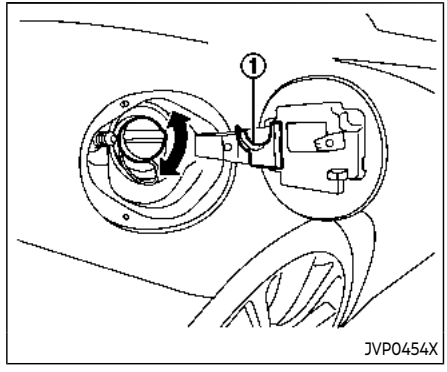

To remove the fuel-filler cap:

1. Turn the fuel-filler cap counterclockwise to remove.
2. Put the fuel-filler cap on the cap holder ① while refueling.

To install the fuel-filler cap:

1. Insert the fuel-filler cap straight into the fuel-filler tube.
2. Turn the fuel-filler cap clockwise until a single click is heard.

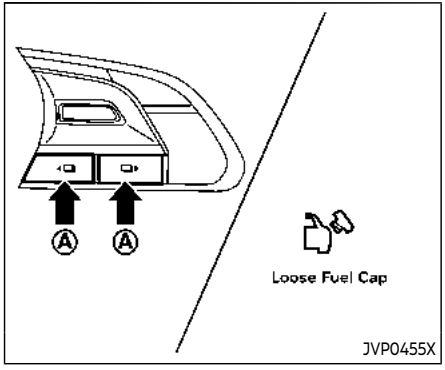

Loose Fuel Cap warning

The Loose Fuel Cap warning appears in the vehicle information display when the fuel-filler cap is not tightened correctly after the vehicle has been refueled. It may take a few driving trips for the warning to be displayed.

To turn off the warning, perform the following:

1. Remove and install the fuel-filler cap as soon as possible. (See "Fuel-filler cap" (P.3-25).)
2. Tighten the fuel-filler cap until a single click is heard.
3. Push the ◀ or ▶ switch Ⓐ on the steering wheel for longer than 1 second to turn off the Loose Fuel Cap warning after tightening the fuel-filler cap.

WARNING

- **Do not adjust the steering wheel while driving. You could lose control of your vehicle and cause an accident.**
- **Do not adjust the steering wheel any closer to you than is necessary for proper steering operation and comfort. The driver's air bag inflates with great force. If you are unrestrained, leaning forward, sitting sideways or out of position in any way, you are at greater risk of injury or death in a crash. You may also receive serious or fatal injuries from the air bag if you are up against it when it inflates. Always sit back against the seatback and as far away as practical from the steering wheel. Always use the seat belts.**

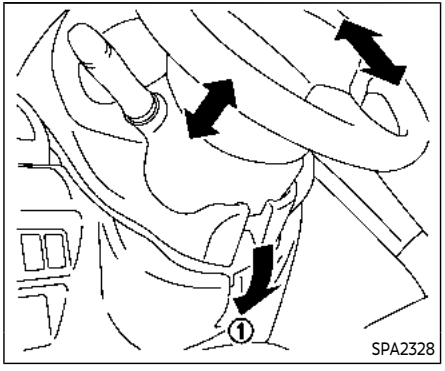

MANUAL OPERATION (if so equipped)

Tilt or telescopic operation

Pull the lock lever ① down and adjust the steering wheel up, down, forward or rearward to the desired position.

Push the lock lever up securely to lock the steering wheel in place.

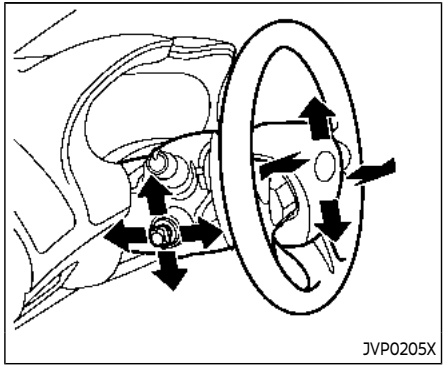

ELECTRIC OPERATION (if so equipped)

Tilt or telescopic operation

Move the switch to adjust the steering wheel up or down, forward or rearward to the desired position.

Entry/Exit function operation:

The automatic drive positioner system will make the steering wheel move up automatically when the driver's door is opened with the ignition switch in the LOCK position. This lets the driver get into and out of the seat more easily.

For more information, see "Automatic drive positioner" (P.3-33).

SUN VISORS

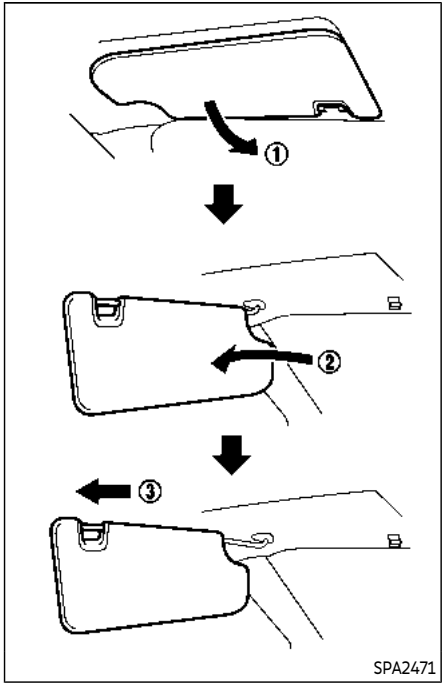

1. To block glare from the front, swing down the sun visor ①.
2. To block glare from the side, remove the sun visor from the center mount and swing the visor to the side ②.
3. Slide the sun visor ③ in or out as needed (for driver's side only).

MIRRORS

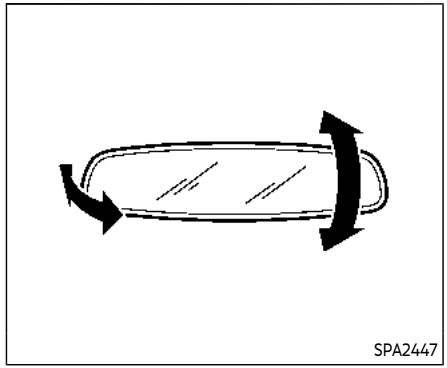

INSIDE MIRROR

Adjust the height and the angle of the inside mirror to the desired position.

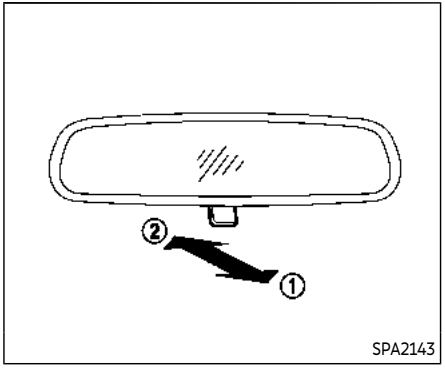

Manual anti-glare type

The night position ① will reduce glare from the headlights of vehicles behind you at night.

Use the day position ② when driving in daylight hours.

WARNING

Use the night position only when necessary, because it reduces rear view clarity.

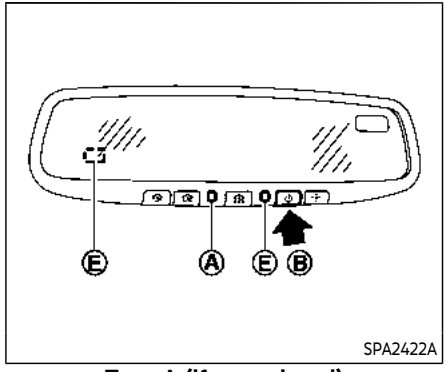

Type A (if so equipped)

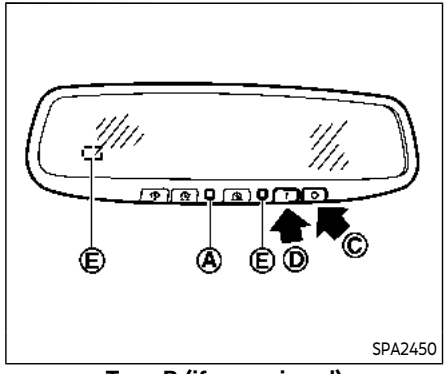

Type B (if so equipped)

Automatic anti-glare type

The inside mirror is designed so that it automatically changes reflection according to the intensity of the headlights of the following vehicle.

The anti-glare system will be automatically turned on when the ignition switch is placed in the ON position.

The anti-glare system also operates for the outside mirrors (if so equipped).

When the anti-glare system is turned on, the indicator light Ⓐ will illuminate and excessive glare from the headlights of the vehicle behind you will be reduced.

Type A (if so equipped): Push the ⏻ switch Ⓑ to make the inside mirror operate normally and the indicator light will turn off. Push the ⏻ switch Ⓑ again to turn the system on.

Type B (if so equipped): Push the "○" switch Ⓒ to make the inside mirror operate normally. The indicator light will turn off. Push the "I" switch Ⓓ to turn the system on.

Do not allow any object to cover the sensors Ⓔ or apply glass cleaner on them. Doing so will reduce the sensitivity of the sensor, resulting in improper operation.

For the compass (if so equipped) operation, see "Compass" (P.2-9).

For the HomeLink® Universal Transceiver (if

so equipped) operation, see “HomeLink® Universal Transceiver” (P.2-59).

OUTSIDE MIRRORS

WARNING

Objects viewed in the outside mirror on the passenger side are closer than they appear. Be careful when moving to the right. Using only this mirror could cause an accident. Use the inside mirror or glance over your shoulder to properly judge distances to other objects.

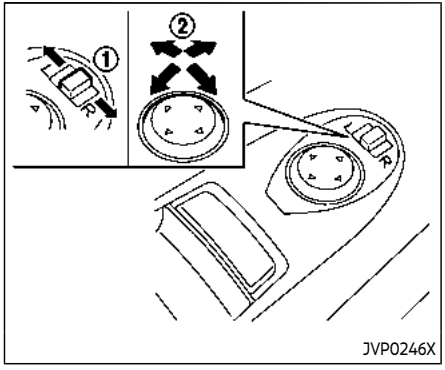

Adjusting outside mirrors

The outside mirror control switch is located on the driver’s armrest.

The outside mirror will operate only when the ignition switch is in the ACC or ON position.

Move the switch ① right or left to select the right or left side mirror, then adjust using the control switch ②.

Defrosting outside mirrors

The outside mirrors will be heated when the rear window defroster switch is operated.

If the engine is started using the remote start function (if so equipped) when the outside air temperature, the interior temperature and the engine coolant temperature are low, the rear window glass and outside mirror defroster may turn on automatically. For additional information about the remote engine start function, see “Remote engine start” (P.3-19).

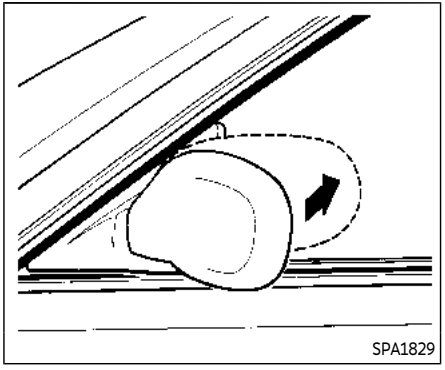

Foldable outside mirrors

Fold the outside mirror by pushing it toward the rear of the vehicle.

Reverse tilt-down feature (if so equipped)

When backing up the vehicle, the right and left outside mirrors will turn downward automatically to provide better rear visibility.

1. Push the ignition switch to the ON position.
2. Move the shift lever to the R (Reverse) position.
3. Select the right or left side mirror by operating the outside mirror control switch.
4. The outside mirror surface moves downward.

When one of the following conditions has occurred, the outside mirror surface will return to its original position.

- The shift lever is moved to any position other than R (Reverse).
- The outside mirror control switch is set to the center position.
- The ignition switch is pushed to the OFF position.

Automatic anti-glare (if so equipped)

The outside mirrors are designed so that they automatically change reflection according to the intensity of the headlights of the vehicle following you.

The anti-glare system will be automatically turned on when the ignition switch is placed in the ON position.

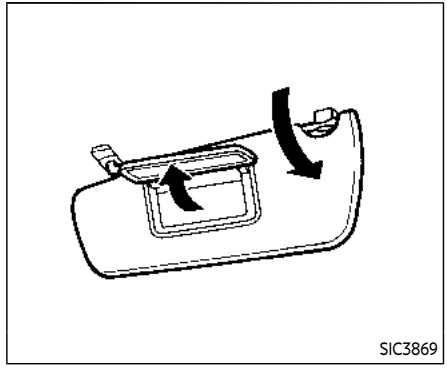

VANITY MIRROR

To use the front vanity mirror, pull down the sun visor and pull up the cover.

AUTOMATIC DRIVE POSITIONER (if so equipped)

The automatic drive positioner system has the following features:

- Entry/exit function
- Memory storage

ENTRY/EXIT FUNCTION

This system is designed so that the steering column will automatically move when the shift lever is in the P (Park) position. This allows the driver to get into and out of the driver's seat more easily.

The steering wheel will move up when the driver's door is opened with the ignition switch in the LOCK position.

The steering wheel will return to the previous position when the ignition switch is placed in the ACC position.

Cancel or activate entry/exit function

All the following conditions must be met before cancelling or activating the entry/exit function.

- The ignition switch is placed in the LOCK position.
- The entry/exit function is not in operation.
- The following switches are not operated.
  - Seat memory switches
  - Power seat switches
  - Electric tilting/telescopic steering wheel switch

The entry/exit function can be activated or canceled by pushing and holding the SET switch for more than 10 seconds.

The entry/exit function can also be activated or canceled if the [Lift Steering Wheel on Exit] key is turned to ON or OFF in the [Settings] menu on the lower display. (See the INFINITI InTouch™ Owner's Manual. The displayed keys on the lower display may vary depending on models, specifications and software versions.)

Initialize entry/exit function

If the battery cable is disconnected, or if the fuse opens, the entry/exit function will not work though this function was set on before. In such a case, after connecting the battery or replacing with a new fuse, open and close the driver's door more than two times after the ignition switch is switched from the ON position to the LOCK position. The entry/exit function will be activated.

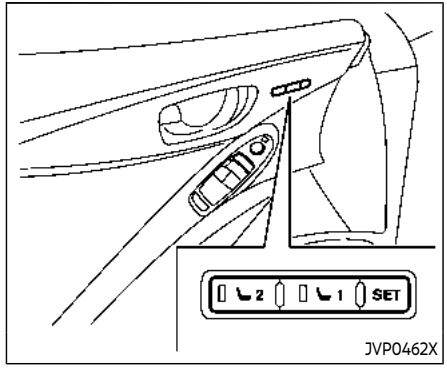

MEMORY STORAGE

Two positions for the driver's seat, steering column and outside mirrors can be stored in the automatic drive positioner memory. Follow these procedures to use the memory system.

1. Adjust the driver's seat, steering column and outside mirrors to the desired positions by manually operating each adjusting switch. For additional information, see "Seats" (P.1-2), "Tilt/telescopic steering" (P.3-27) and "Outside mirrors" (P.3-31).
2. Push the SET switch and, within 5 seconds, push the memory switch (1 or

2) fully for at least 1 second.

The indicator light for the pushed memory switch will stay on for approximately 5 seconds after pushing the switch.

When the memory is stored in the memory switch (1 or 2), a buzzer will sound.

If memory is stored in the same memory switch, the previous memory will be deleted.

Confirming memory storage

Push the SET switch. If the main memory has not been stored, the indicator light will come on for approximately 0.5 seconds. When the memory has stored in position, the indicator light will stay on for approximately 5 seconds.

Selecting the memorized position

1. Move the shift lever to the P (Park) position.
2. Push the memory switch (1 or 2) fully for at least 1 second.

   The driver's seat, steering column and outside mirrors will move to the memorized position with the indicator light flashing, and then the light will stay on for approximately 5 seconds.

Linking log-in function to a stored memory position

The log-in function can be linked to a stored memory position with the following procedure.

1. Place the ignition switch in the ON position while carrying an Intelligent Key that was registered to the vehicle with the log-in function. For more details, see "Log-in function" (P.3-15).
2. Adjust the position of the driver's seat, steering column and outside mirrors manually. See "Seats" (P.1-2), "Tilt/telescopic steering" (P.3-27) and "Outside mirrors" (P.3-31).
3. Place the ignition switch in the OFF position.

The next time you log in (selecting the user on the display) after placing the ignition switch in the ON position while carrying the Intelligent Key, the system will automatically adjust to the memorized driving position.

SYSTEM OPERATION

The automatic drive positioner system will not work or will stop operating under the following conditions:

- When the vehicle is moving.
- When any of the memory switches are pushed while the automatic drive positioner is operating.
- When the adjusting switch for the driver's seat and steering column is turned on while the automatic drive positioner is operating.
- When the memory switch 1 or 2 is pushed for less than 1 second.
- When the seat has already been moved to the memorized position.
- When no seat position is stored in the memory switch.
- While the walk-in function operates.

4 Monitor, climate, audio, phone and voice recognition systems

INFINITI InTouch™ Owner's Manual 4-2
Safety precautions 4-2
RearView Monitor (if so equipped) 4-3
RearView Monitor system operation 4-4
How to read the displayed lines 4-4
Difference between predictive and actual distances 4-5
How to park with predictive course lines 4-6
RearView Monitor settings 4-7
RearView Monitor system limitations 4-9
System maintenance 4-10
Around View® Monitor (if so equipped) 4-11
Around View® Monitor system operation 4-12
Around View® Monitor settings 4-19
Around View® Monitor system limitations 4-21
System maintenance 4-23
Camera aiding sonar function (for models with Around View® Monitor) 4-24
Sonar system operation 4-25
Turning on and off the sonar function 4-25
Sonar system limitations 4-28
System maintenance 4-28
Moving Object Detection (MOD) (if so equipped) 4-29
MOD system operation 4-30
Turning the MOD system ON and OFF 4-31
MOD system limitations 4-32
System maintenance 4-33
Ventilators 4-34
Center ventilators 4-34
Side ventilators 4-34
Heater and air conditioner 4-34
Automatic air conditioner 4-36
Climate settings 4-40
Operating tips 4-40
Servicing air conditioner 4-41
Antenna 4-42
Window antenna 4-42
Satellite antenna 4-42
Car phone or CB radio 4-42

INFINITI INTOUCH™ OWNER'S MANUAL

Refer to the INFINITI InTouch™ Owner's Manual that includes the following information.

- Navigation system (if so equipped)
- Audio system
- Bluetooth® Hands-Free Phone system
- INFINITI InTouch™ Services (if so equipped)
- SiriusXM Traffic™ (if so equipped)
- SiriusXM® Travel Link (if so equipped)
- SiriusXM® Radio
- Viewing information
- Other settings
- Voice recognition (if so equipped)
- Meter settings
- General system information

SAFETY PRECAUTIONS

WARNING

- **Do not adjust the display controls, heater and air conditioner controls or audio controls while driving so that full attention may be given to vehicle operation.**
- **If you noticed any foreign objects entering the system hardware, spilled liquid on the system, or noticed smoke or fumes coming out from the system, or any other unusual operation is observed, stop using the system immediately and contact the nearest INFINITI retailer. Ignoring such conditions may lead to an accident, fire or electric shock.**
- **Do not disassemble or modify this system. If you do, it may lead to an accident, fire, or electric shock.**
- **Park the vehicle in a safe location and apply the parking brake to view images on the touch screen display.**

CAUTION

- **Do not use the system when the engine is not running for extended periods of time to prevent battery discharge.**
- **The glass screen on the liquid crystal display may break if it is hit with a hard or sharp object. If the glass screen breaks, do not touch it. Doing so could result in an injury.**
- **Extreme temperature conditions [below -4°F (-20°C) and above 158°F (70°C)] could affect the performance of the system.**

REARVIEW MONITOR (if so equipped)

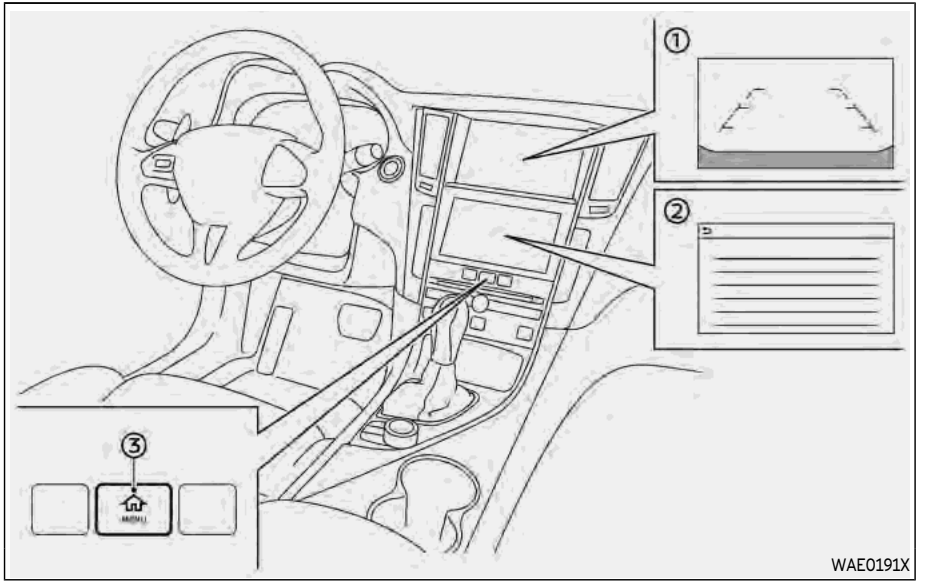

1. Upper touch-screen display (upper display)
2. Lower touch-screen display (lower display)
3. MENU button

⚠ WARNING

Failure to follow the warnings and instructions for proper use of the RearView Monitor system could result in serious injury or death.

- **The RearView Monitor is a convenience but it is not a substitute for proper backing. Always turn and look out the windows, and check mirrors to be sure that it is safe to move before operating the vehicle. Always back up slowly.**
- **The system is designed as an aid to the driver in showing large stationary objects directly behind the vehicle, to help avoid damaging the vehicle.**
- **The distance guide line and the vehicle width line should be used as a reference only when the vehicle is on a level paved surface. The distance viewed on the monitor is for reference only and may be different than the actual distance between the vehicle and displayed objects.**

CAUTION

Do not scratch the camera lens when cleaning dirt or snow from the front of the camera.

The RearView Monitor system automatically shows a rear view of the vehicle in the upper display when the shift lever is shifted into the "R" (Reverse) position. When activating the RearView Monitor, the guide lines, the icons and the messages may not be displayed immediately.

The radio can still be heard while the RearView Monitor is active.

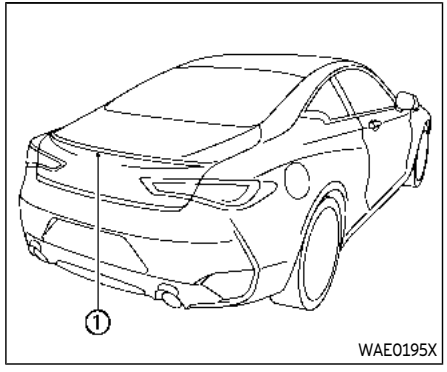

To display the rear view, the RearView Monitor system uses a camera ① located just above the vehicle's license plate.

REARVIEW MONITOR SYSTEM OPERATION

With the ignition switch in the "ON" position, move the shift lever to the "R" (Reverse) position to operate the RearView Monitor.

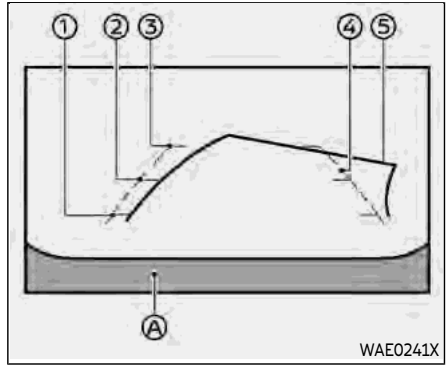

HOW TO READ THE DISPLAYED LINES

Guiding lines which indicate the vehicle width and distances to objects with reference to the bumper line Ⓐ are displayed on the monitor.

Distance guide lines:

Indicate distances from the bumper.

- Red line ①: approx. 1.5 ft (0.5 m)
- Yellow line ②: approx. 3 ft (1 m)
- Green line ③: approx. 7 ft (2 m)

Vehicle width guide lines ④:

Indicate the approximate vehicle width.

Predictive course lines ⑤:

Indicate the predictive course when backing up. The predictive course lines will be displayed on the monitor when the shift lever is in the "R" (Reverse) position and the steering wheel is turned. The predictive course lines will move depending on how much the steering wheel is turned and will not be displayed while the steering wheel is in the neutral position.

The vehicle width guide lines and the width of the predictive course lines are wider than the actual width and course.

DIFFERENCE BETWEEN PREDICTIVE AND ACTUAL DISTANCES

The displayed guidelines and their locations on the ground are for approximate reference only. Objects on uphill or downhill surfaces or projecting objects will be actually located at distances different from those displayed in the monitor relative to the guide lines (refer to illustrations). When in doubt, turn around and view the objects as you are backing up, or park and exit the vehicle to view the positioning of objects behind the vehicle.

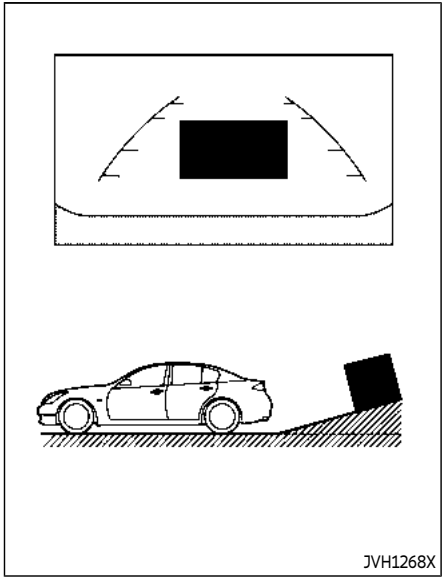

Backing up on a steep uphill

When backing up the vehicle up a hill, the distance guide lines and the vehicle width guide lines are shown closer than the actual distance. Note that any object on the hill is farther than it appears on the monitor.

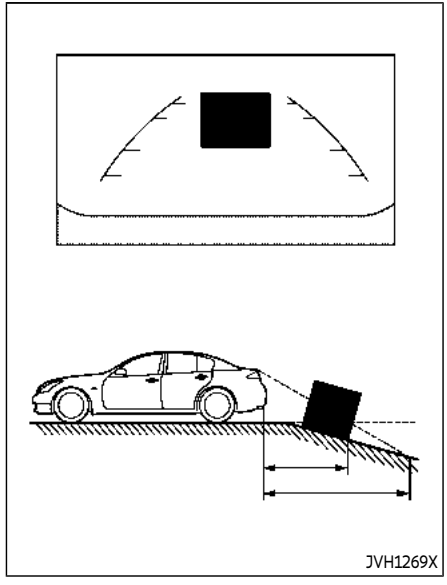

Backing up on a steep downhill

When backing up the vehicle down a hill, the distance guide lines and the vehicle width guide lines are shown farther than the actual distance. Note that any object on the hill is closer than it appears on the monitor.

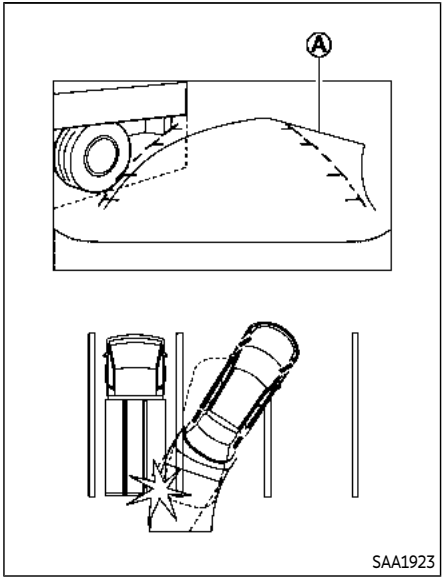

Backing up near a projecting object

The predictive course lines Ⓐ do not touch the object in the display. However, the vehicle may hit the object if it projects over the actual backing up course.

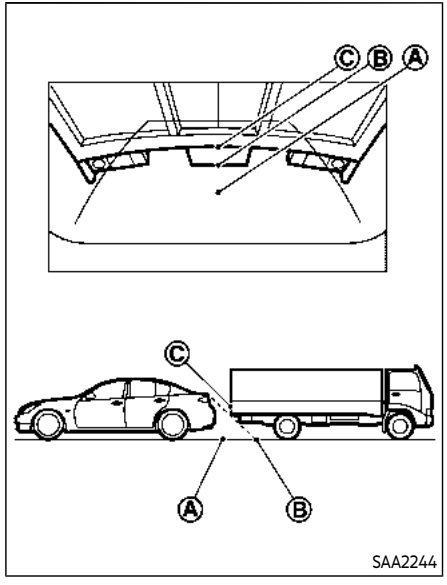

Backing up behind a projecting object

The position Ⓒ is shown farther than the position Ⓑ in the display. However, the position Ⓒ is actually at the same distance as the position Ⓐ. The vehicle may hit the object when backing up to the position Ⓐ if how to park with the object projects over the actual backing up course.

HOW TO PARK WITH PREDICTIVE COURSE LINES

WARNING

- **If the tires are replaced with different sized tires, the predictive course lines may not be displayed correctly.**
- **On a snow-covered or slippery road, there may be a difference between the predictive course lines and the actual course line.**
- **The displayed lines will appear slightly off to the right because the rearview camera is not installed in the rear center of the vehicle.**
- **If the battery is disconnected or becomes discharged, the predictive course lines may be displayed incorrectly. If this occurs, please perform the following procedures:**
  - **Turn the steering wheel from lock to lock while the engine is running.**
  - **Drive the vehicle on a straight road for more than 5 minutes.**

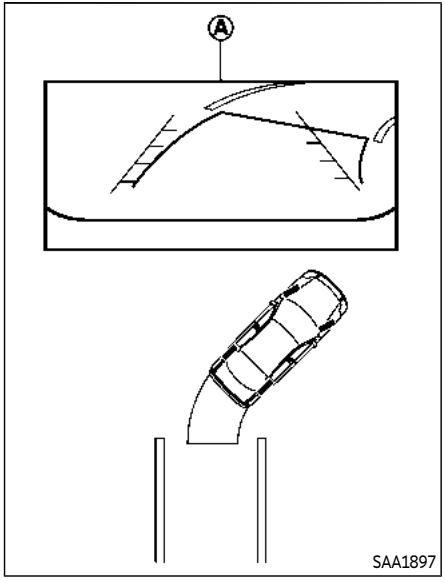

1. Visually check that the parking space is safe before parking your vehicle.
2. The rear view of the vehicle is displayed on the screen Ⓐ when the shift lever is moved to the "R" (Reverse) position.

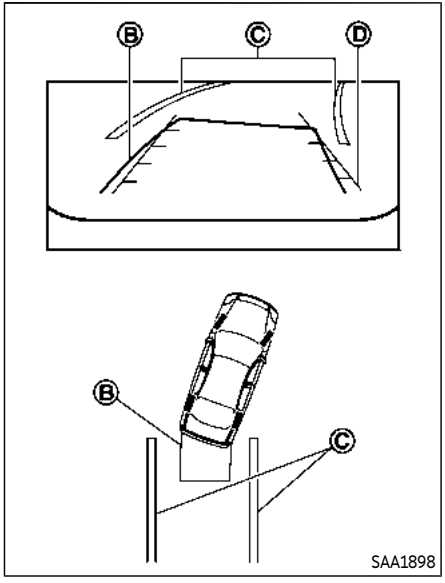

3. Slowly back up the vehicle adjusting the steering wheel so that the predictive course lines Ⓑ enter the parking space Ⓒ.
4. Maneuver the steering wheel to make the vehicle width guide lines Ⓓ parallel to the parking space Ⓒ while referring to the predictive course lines.
5. When the vehicle is parked in the space completely, move the shift lever to the "P" (Park) position and apply the parking brake.

REARVIEW MONITOR SETTINGS

The RearView Monitor settings can be changed using the following procedures.

1. Push the MENU button.
2. Touch [Settings] on the lower display.
3. Touch [Camera].

The displayed keys on the lower display may vary depending on models, specifications and software versions.

Available setting items:

Setting items		Action
Predictive Course Lines		When this item is turned on, the predictive course lines are displayed on the RearView Monitor screen. (See "How to park with predictive course lines" (P.4-6).)
Display Settings (Available only when camera screen is displayed on the upper display.)	Brightness	Adjust display settings by touching the "+"/"-" key.
	Contrast	
	Tint	
	Color	
	Black Level	

NOTE:

Do not adjust any of the RearView Monitor settings while the vehicle is moving. Make sure the parking brake is firmly applied.

REARVIEW MONITOR SYSTEM LIMITATIONS

WARNING

Listed below are the system limitations for RearView Monitor. Failure to operate the vehicle in accordance with these system limitations could result in serious injury or death.

- **The system cannot completely eliminate blind spots and may not show every object.**
- **Underneath the bumper and the corner areas of the bumper cannot be viewed on the RearView Monitor because of its monitoring range limitation. The system will not show small objects below the bumper, and may not show objects close to the bumper or on the ground.**
- **Objects viewed in the RearView Monitor differ from actual distance because a wide-angle lens is used.**
- **Objects in the RearView Monitor will appear visually opposite compared to when viewed in the rearview and outside mirrors.**
- **Use the displayed lines as a reference. The lines are highly affected by the number of occupants, fuel level, vehicle position, road conditions and road grade.**
- **Make sure that the trunk lid is securely closed when backing up.**
- **Do not put anything on the rearview camera. The rearview camera is installed above the license plate.**
- **When washing the vehicle with high-pressure water, be sure not to spray it around the camera. Otherwise, water may enter the camera unit causing water condensation on the lens, a malfunction, fire or an electric shock.**
- **Do not strike the camera. It is a precision instrument. Otherwise, it may malfunction or cause damage resulting in a fire or an electric shock.**

The following are operating limitations and do not represent a system malfunction:

- When the temperature is extremely high or low, the screen may not clearly display objects.
- When strong light is directly coming on the camera, objects may not be displayed clearly.
- Vertical lines may be seen in objects on the screen. This is due to strong reflected light from the bumper.
- The screen may flicker under fluorescent light.
- The colors of objects on the RearView Monitor may differ somewhat from the actual color of objects.
- Objects on the monitor may not be clear in a dark environment.
- There may be a delay when switching to the RearView Monitor.
- If dirt, rain or snow accumulates on the camera, the RearView Monitor may not display object clearly. Clean the camera.
- Do not use wax on the camera lens. Wipe off any wax with a clean cloth dampened with a diluted mild cleaning agent, then wipe with a dry cloth.

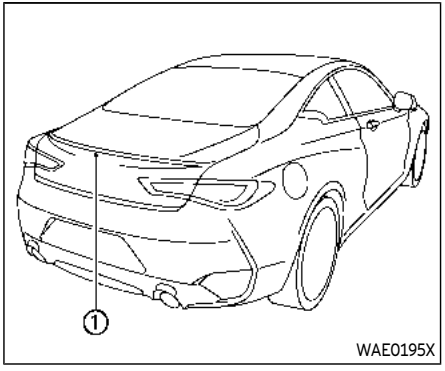

SYSTEM MAINTENANCE

CAUTION

- **Do not use alcohol, benzine or thinner to clean the camera. This will cause discoloration.**
- **Do not damage the camera as the monitor screen may be adversely affected.**

If dirt, rain or snow accumulates on the camera ①, the RearView Monitor may not display objects clearly. Clean the camera by wiping it with a cloth dampened with a diluted mild cleaning agent and then wiping it with a dry cloth.

AROUND VIEW® MONITOR (if so equipped)

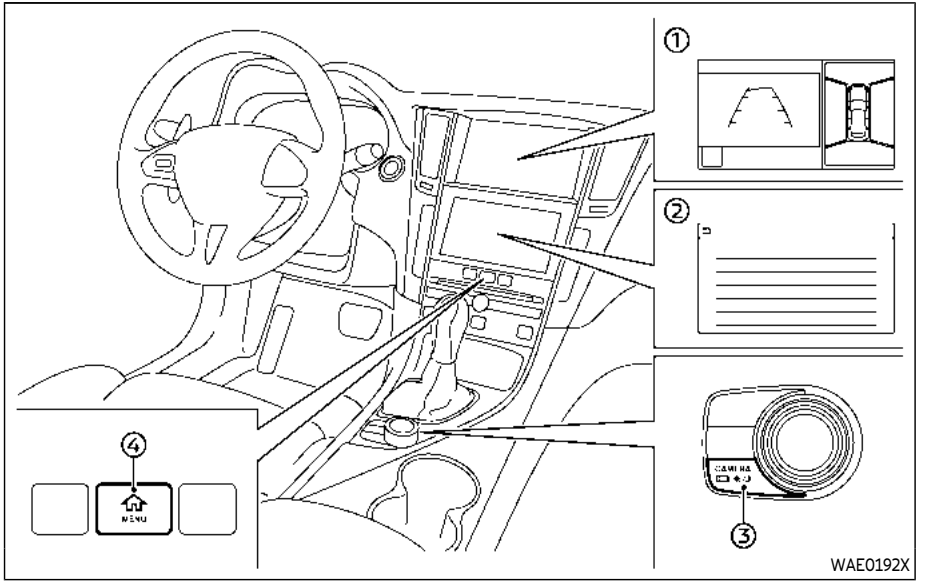

1. Upper touch-screen display (upper display)
2. Lower touch-screen display (lower display)
3. CAMERA button
4. MENU button

⚠ WARNING

Failure to follow the warnings and instructions for the proper use of the Around View® Monitor system could result in serious injury or death.

- **The Around View® Monitor is a convenience feature and is not a substitute for proper vehicle operation because it has areas where objects cannot be viewed. The four corners of the vehicle in particular, are areas where objects do not always appear in the bird's-eye, front, or rear views. Always check your surroundings to be sure that it is safe to move before operating the vehicle. Always operate the vehicle slowly. Always look out the windows and check mirrors to be sure that it is safe to move.**
- **The driver is always responsible for safety during parking and other maneuvers.**

CAUTION

Do not scratch the lens when cleaning dirt or snow from the front of the camera.

The Around View® Monitor system is designed as an aid to the driver in situations such as slot parking or parallel parking.

The monitor displays various views of the position of the vehicle in a split screen format. All views are not available at all times.

Available views:

- Front view
  An approximately 150-degree view of the front of the vehicle.
- Rear view
  An approximately 150-degree view of the rear of the vehicle.
- Bird's-eye view
  The surrounding view of the vehicle from above.
- Front-side view
  The view around and ahead of the front passenger's side wheel.
- Front-wide view
  An approximately 180-degree view of the front of the vehicle.

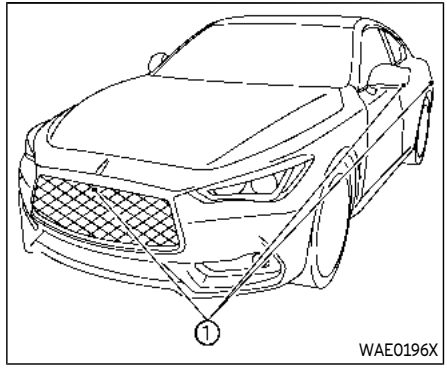

To display the multiple views, the Around View® Monitor system uses cameras ① located in the front grill, on the vehicle's outside mirrors and one just above the vehicle's license plate.

AROUND VIEW® MONITOR SYSTEM OPERATION

With the ignition switch in the "ON" position, move the shift lever to the "R" (Reverse) position or push the CAMERA button to display the Around View® Monitor on the upper display.

Available views

WARNING

- **The distance guide line and the vehicle width line should be used as a reference only when the vehicle is on a paved, level surface. The distance viewed on the monitor is for reference only and may be different than the actual distance between the vehicle and displayed objects.**
- **Use the displayed lines and the bird's-eye view as a reference. The lines and the bird's-eye view are greatly affected by the number of occupants, fuel level, vehicle position, road condition and road grade.**
- **If the tires are replaced with different sized tires, the predictive course lines and the bird's-eye view may be displayed incorrectly.**
- **When driving the vehicle up a hill, objects viewed in the monitor are farther than they appear. When driving the vehicle down a hill, objects viewed in the monitor are closer than they appear.**
- **Objects in the rear view will appear visually opposite compared to when viewed in the rear view and outside mirrors.**
- **Use the mirrors or actually look to properly judge distances to other objects.**
- **The distance between objects viewed in the rear view differs from actual distance because a wide-angle lens is used.**
- **On a snow-covered or slippery road, there may be a difference between the predictive course lines and the actual course line.**
- **The vehicle width and predictive course lines are wider than the actual width and course.**
- **The displayed lines on the rear view will appear slightly off to the right because the rearview camera is not installed in the rear center of the vehicle.**

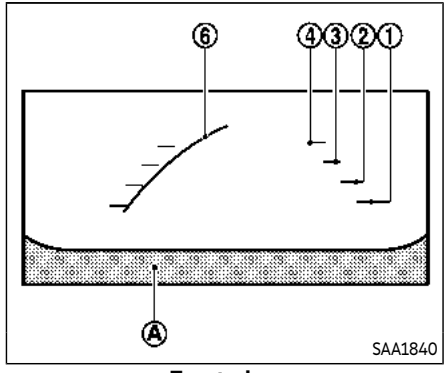

Front view

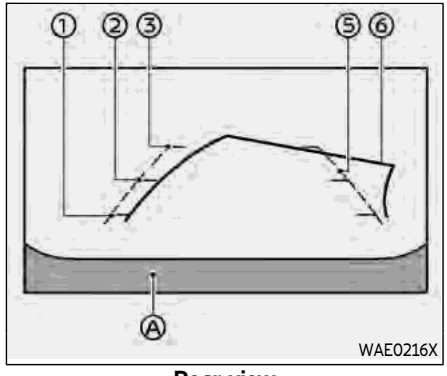

Rear view

Front and rear view:

Guiding lines that indicate the approximate vehicle width and distances to objects with reference to the vehicle body line Ⓐ, are displayed on the monitor.

Distance guide lines ① - ④:

Indicate distances from the vehicle body.

- Red line ①: approx. 1.5 ft (0.5 m)
- Yellow line ②: approx. 3 ft (1 m)
- Green line ③: approx. 7 ft (2 m)
- Green line ④ (front view only): approx. 10 ft (3 m)

Vehicle width guide lines ⑤:

Indicate the approximate vehicle width.

Predictive course lines ⑥:

Indicate the predictive course when operating the vehicle. The predictive course lines will move depending on how much the steering wheel is turned. The predictive course lines in the rear view will not be displayed while the steering wheel is in the straight ahead position.

The front view will not be displayed when the vehicle speed is above 6 MPH (10 km/h).

NOTE:

When the monitor displays the front view and the steering wheel turns about 90 degrees or less from the straight ahead position, both the right and left predictive course lines ⑥ are displayed. When the steering wheel turns about 90 degrees or more, a line is displayed only on the opposite side of the turn.

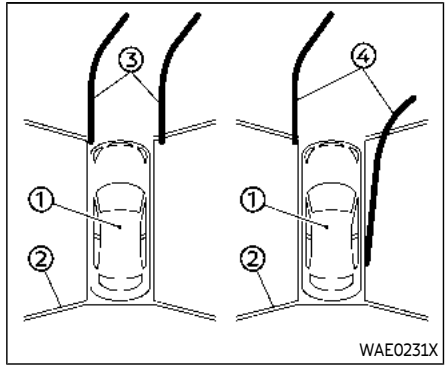

Bird's-eye view:

The bird's-eye view shows the overhead view of the vehicle which helps confirm the vehicle position and the predictive course to a parking space.

The vehicle icon ① shows the position of the vehicle. Note that the distance between objects viewed in the bird's-eye view differs from the actual distance.

The areas that the cameras cannot cover ② are indicated in black.

After the ignition switch is placed in the "ON" position, the unviewable area ② is highlighted in yellow for a few seconds after the bird's-eye view is displayed.

Predictive course lines (③ and ④) indicate the predictive course when operating the vehicle. The predictive course lines (③ and ④) will be displayed on the monitor when the steering wheel is turned. The predictive course lines (③ and ④) will move depending on how much the steering wheel is turned.

WARNING

- **Objects in the bird's-eye view will appear farther than the actual distance.**
- **Tall objects, such as a curb or vehicle, may be misaligned or not displayed at the seam of the views.**
- **Objects that are above the camera cannot be displayed.**
- **The view for the bird's-eye view may be misaligned when the camera position alters.**
- **A line on the ground may be misaligned and is not seen as being straight at the seam of the views. The misalignment will increase as the line proceeds away from the vehicle.**
- **Tire angle display does not indicate the actual tire angle.**

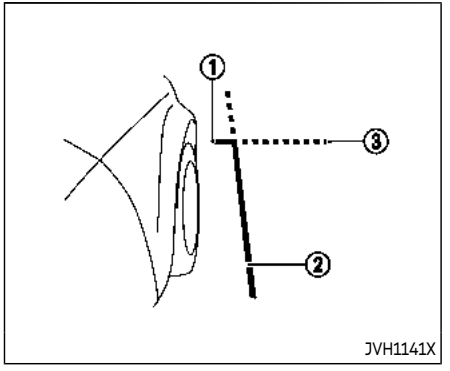

Front-side view:

Guiding lines:

Guiding lines that indicate the width and the front end of the vehicle are displayed on the monitor.

The front-of-vehicle line ① shows the front part of the vehicle.

The side-of-vehicle line ② shows the vehicle width including the outside mirror.

The extensions ③ of both the front ① and side ② lines are shown with a green dotted line.

CAUTION

The turn signal light may look like the side-of-vehicle line. This is not a malfunction.

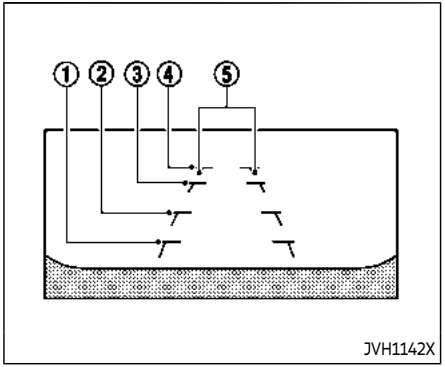

Front-wide view:

The front-wide view shows a wider area on the entire screen and allows checking of the blind corners on the right and left sides. The front-wide view displays an approximately 180-degree area while the front view displays an approximately 150-degree area. The predictive course lines are not displayed on the front-wide view.

Distance guide lines ① - ④:

Indicate distances from the vehicle body.

- Red line ①: approx. 1.5 ft (0.5 m)
- Yellow line ②: approx. 3 ft (1 m)
- Green line ③: approx. 7 ft (2 m)
- Green line ④: approx. 10 ft (3 m)

Vehicle width guide lines ⑤:

Indicates the approximate vehicle width.

Difference between predictive and actual distances

The displayed guidelines and their locations on the ground are for approximate reference only. Objects on uphill or downhill surfaces or projecting objects will be actually located at distances different from those displayed in the monitor relative to the guide lines (refer to illustrations). When in doubt, turn around and view the objects as you are backing up, or park and exit the vehicle to view the positioning of objects behind the vehicle.

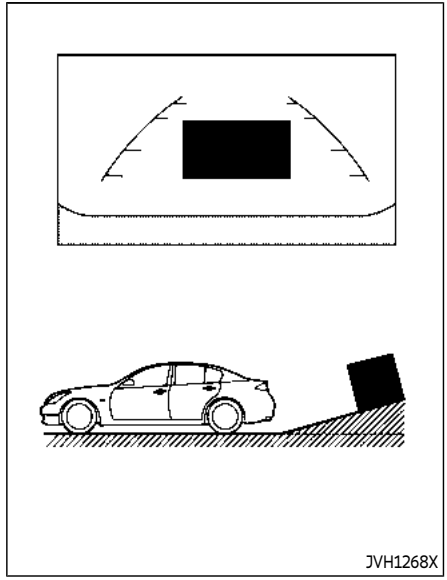

Backing up on a steep uphill:

When backing up the vehicle up a hill, the distance guide lines and the vehicle width guide lines are shown closer than the actual distance. Note that any object on the hill is farther than it appears on the monitor.

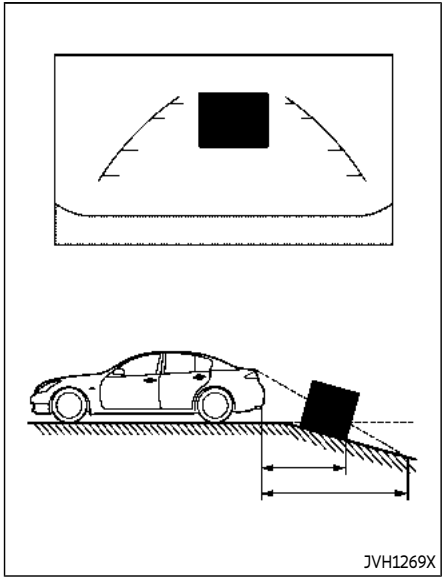

Backing up on a steep downhill:

When backing up the vehicle down a hill, the distance guide lines and the vehicle width guide lines are shown farther than the actual distance. Note that any object on the hill is closer than it appears on the monitor.

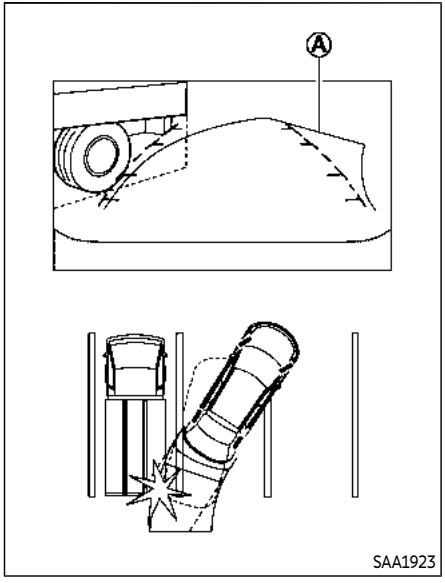

Backing up near a projecting object:

The predictive course lines Ⓐ do not touch the object in the display. However, the vehicle may hit the object if it projects over the actual backing up course.

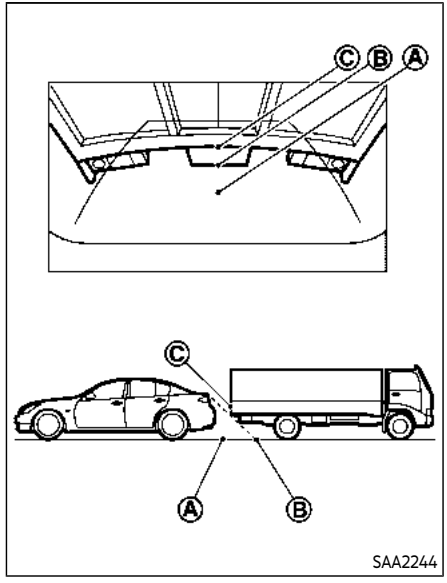

Backing up behind a projecting object:

The position Ⓒ is shown farther than the position Ⓑ in the display. However, the position Ⓒ is actually at the same distance as the position Ⓐ. The vehicle may hit the object when backing up to the position Ⓐ if the object projects over the actual backing

up course.

How to park with predictive course lines

WARNING

- **If the tires are replaced with different sized tires, the predictive course lines may not be displayed correctly.**
- **On a snow-covered or slippery road, there may be a difference between the predictive course lines and the actual course line.**
- **The displayed lines will appear slightly off to the right because the rearview camera is not installed in the rear center of the vehicle.**
- **If the battery is disconnected or becomes discharged, the predictive course lines may be displayed incorrectly. If this occurs, please perform the following procedures:**
  - **Turn the steering wheel from lock to lock while the engine is running.**
  - **Drive the vehicle on a straight road for more than 5 minutes.**

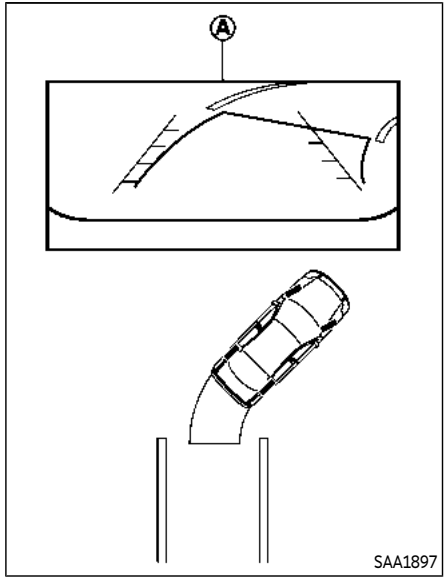

1. Visually check that the parking space is safe before parking your vehicle.
2. The rear view of the vehicle is displayed on the screen Ⓐ when the shift lever is moved to the "R" (Reverse) position.

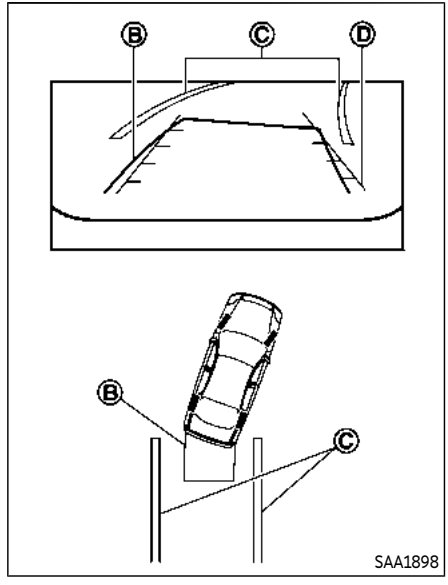

3. Slowly back up the vehicle adjusting the steering wheel so that the predictive course lines Ⓑ enter the parking space Ⓒ.
4. Maneuver the steering wheel to make the vehicle width guide lines Ⓓ parallel to the parking space Ⓒ while referring to the predictive course lines.

5. When the vehicle is parked in the space completely, move the shift lever to the "P" (Park) position and apply the parking brake.

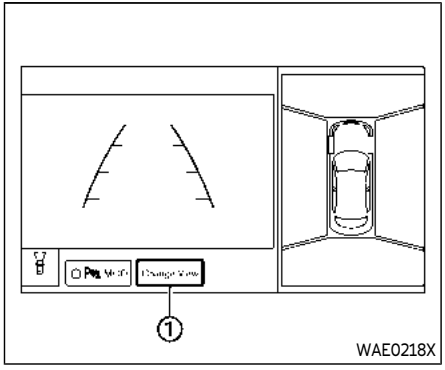

How to switch the display

The Around View® Monitor can display two split views as well as a single view of the front-wide view. Push the CAMERA button, change the shift lever position or touch [Change View] ① to switch between the available views.

If the vehicle is equipped with Back-up Collision Intervention (BCI) system, the BCI system key ("BCI") may be displayed on the Around View® Monitor screen. For details, see "Back-up Collision Intervention (BCI)" (P.5-57).

AROUND VIEW® MONITOR SETTINGS

The Around View® Monitor settings can be changed using the following procedures.

1. Push the MENU button.
2. Touch [Settings] on the lower display.
3. Touch [Camera].

The displayed keys on the lower display may vary depending on models, specifications and software versions.

Available setting items:

Setting item		Action
Camera	MOD	Turn the MOD system on/off. (See "Moving Object Detection (MOD)" (P.4-29).)
	MOD Volume	The volume setting of the MOD detection warning chime can be adjusted.
	Unviewable Area Reminder	When this item is turned on, the unviewable area is highlighted in yellow for several seconds after the bird's-eye view is displayed for the first time when the ignition switch is placed in the "ON" position.
	Predictive Course Lines	When this item is turned on, the predictive course lines are displayed in the front, rear and bird's-eye view screen.
	Auto Show Sonar Image	The automatic sonar display can be turned on/off.
Display Settings (Available only when camera screen is displayed on the upper display.)	Brightness	Adjust display settings by touching the "+"/"-" key.
	Contrast	
	Tint	
	Color	
	Black Level	

NOTE:

Do not adjust any of the Around View® Monitor settings while the vehicle is moving. Make sure the parking brake is firmly applied.

AROUND VIEW® MONITOR SYSTEM LIMITATIONS

WARNING

Listed below are the system limitations for Around View® Monitor. Failure to operate the vehicle in accordance with these system limitations could result in serious injury or death.

- **Do not use the Around View® Monitor with the outside mirrors in the stored position, and make sure that the trunk lid is securely closed when operating the vehicle using the Around View® Monitor.**
- **The apparent distance between objects viewed on the Around View® Monitor differs from the actual distance.**
- **The cameras are installed on the front grille, the outside mirrors and above the rear license plate. Do not put anything on the vehicle that covers the cameras.**
- **When washing the vehicle with high pressure water, be sure not to spray it around the cameras. Otherwise, water may enter the camera unit causing water condensation on the lens, a malfunction, fire or an electric shock.**
- **Do not strike the cameras. They are precision instruments. Doing so could cause a malfunction or cause damage resulting in a fire or an electric shock.**

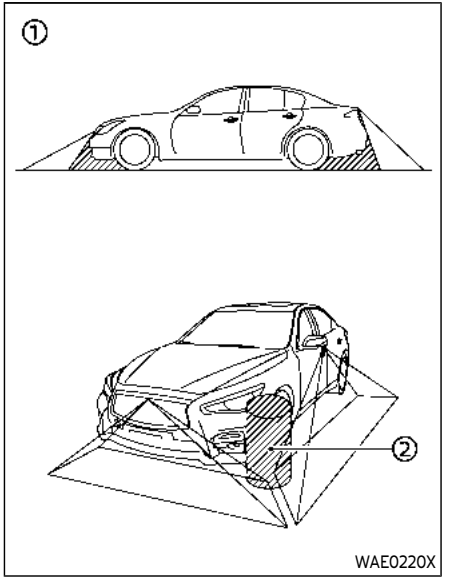

There are some areas where the system will not show objects and the system does not warn of moving objects. When in the front or rear view display, an object below the bumper or on the ground may not be viewed ①. When in the bird's-eye view, a tall object near the seam ② of the camera viewing areas will not appear in the monitor.

The following are operating limitations and do not represent a system malfunction:

- The screen displayed on the Around View® Monitor will automatically return to the previous screen 3 minutes after the CAMERA button has been pushed while the shift lever is in a position other than the "R" (Reverse) position.
- There may be a delay when switching between views.
- When the temperature is extremely high or low, the screen may not display objects clearly.
- When strong light is directly shines on the camera, objects may not be displayed clearly.
- The screen may flicker under fluorescent light.
- The colors of objects on the Around View® Monitor may differ somewhat from the actual color of objects.
- Objects on the monitor may not be clear and the color of the object may differ in a dark environment.
- There may be differences in sharpness between each camera view of the bird's-eye view.
- When activating the Around View® Monitor, the icons and the messages may not be displayed for a while.
- If dirt, rain or snow accumulates on the camera, the Around View® Monitor may not display objects clearly. Clean the camera.
- Do not use wax on the camera lens. Wipe off any wax with a clean cloth that has been dampened with a diluted mild cleaning agent, then wipe with a dry cloth.

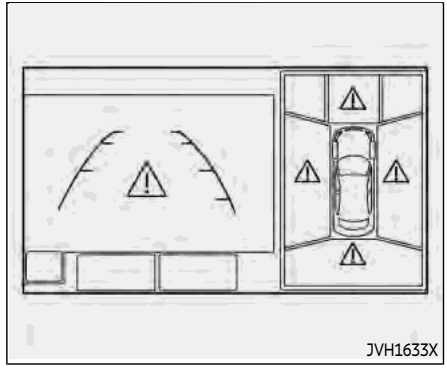

System temporarily unavailable

When the ⚠ icon is displayed on the screen, there will be abnormal conditions in the Around View® Monitor. This will not hinder normal driving operation but the system should be inspected. It is recommended that you visit an INFINITI retailer for this service.

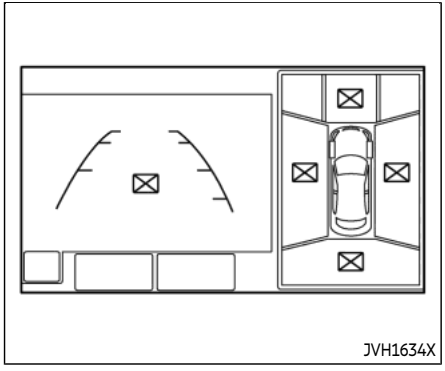

When the ⊠ icon is displayed on the screen, the camera image may be receiving temporary electronic disturbances from surrounding devices. This will not hinder normal driving operation but the system should be inspected. It is recommended that you visit an INFINITI retailer for this service.

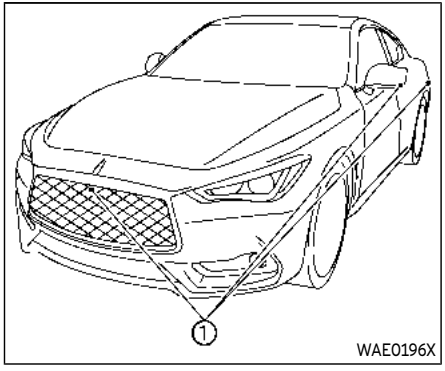

SYSTEM MAINTENANCE

CAUTION

- **Do not use alcohol, benzine or thinner to clean the camera. This will cause discoloration.**
- **Do not damage the camera as the monitor screen may be adversely affected.**

If dirt, rain or snow accumulates on any of the cameras ①, the Around View® Monitor may not display objects clearly. Clean the camera by wiping with a cloth dampened with a diluted mild cleaning agent and then wiping with a dry cloth.

CAMERA AIDING SONAR FUNCTION (for models with Around View® Monitor)

WARNING

Failure to follow the warnings and instructions for proper use of the sonar function as outlined in this section could result in serious injury or death.

- **The sonar is a convenience feature. It is not a substitute for proper parking.**
- **This function is designed as an aid to the driver in detecting large stationary objects to help avoid damaging the vehicle.**
- **The driver is always responsible for safety during parking and other maneuvers.**
- **Always look around and check that it is safe to move before parking.**
- **Read and understand the limitations of the sonar as contained in this section.**

The sonar function helps to inform the driver of large stationary objects around the vehicle when parking by issuing an audible and visual alert.

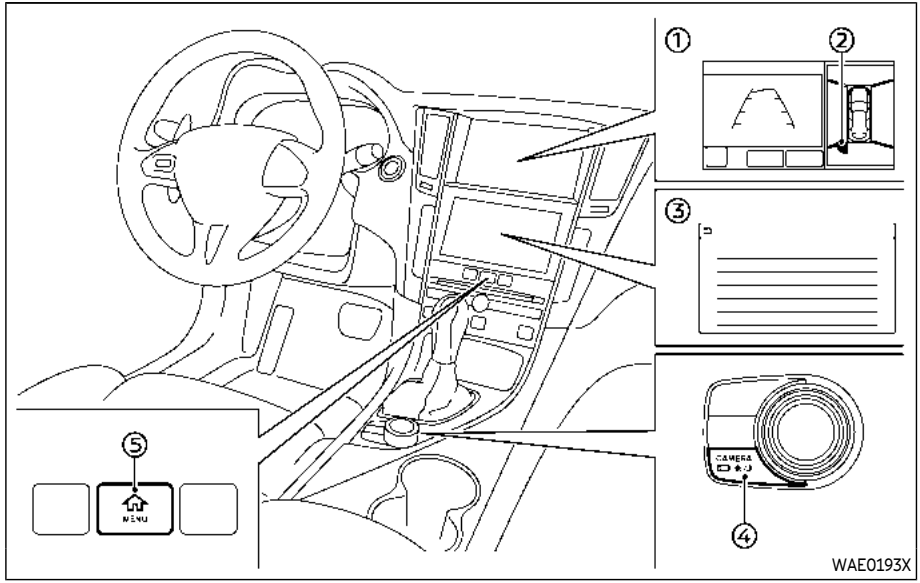

1. Upper touch-screen display (upper display)
2. Sonar indicator
3. Lower touch-screen display (lower display)
4. CAMERA button
5. MENU button

SONAR SYSTEM OPERATION

When the camera is first activated with the bird's-eye view on the upper display, red markers will flash. This indicates that the sonar system is activated.

The system gives the tone for front objects when the shift lever is in the "D" (Drive) position and both front and rear objects when the shift lever is in the "R" (Reverse) position.

When the camera image is shown on the upper display, the system shows the sonar indicator regardless of the shift lever position.

The system is deactivated at speeds above 6 MPH (10 km/h). It is reactivated at lower speeds.

The colors of the sonar indicators and the distance guide lines in the front, front-wide and rear views indicate different distances to the object.

When the objects are detected, the indicator (green) appears and blinks and the tone sounds intermittently. When the vehicle moves closer to the object, the color of the indicator turns yellow and the rate of the blinking and the rate of the tone increase. When the vehicle is very close to the object, the indicator stops blinking and turns red, and the tone sounds continuously.

The intermittent tone will stop after 3 seconds when an object is detected by only the corner sonar and the distance does not change.

The tone will stop when the object is no longer near the vehicle.

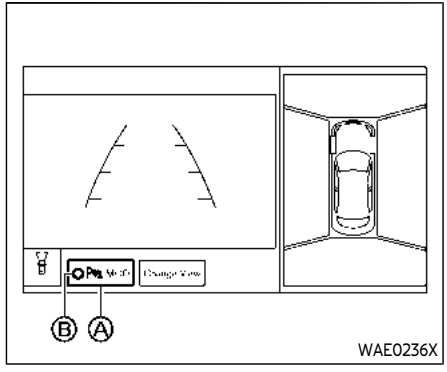

TURNING ON AND OFF THE SONAR FUNCTION

When the Sonar/MOD key Ⓐ is touched, the indicator light Ⓑ on the key will turn off and the sonar will turn off temporarily. The Moving Object Detection (MOD) system will also be turned off at the same time. See "Moving Object Detection (MOD)" (P.4-29).

When the Sonar/MOD key Ⓐ is touched again, the indicator light Ⓑ will turn on and the sonar will turn back on.

In the cases below, the sonar will be turned back on automatically:

- When the shift lever is in the "R" (Reverse) position.

- When the CAMERA button is pushed and a screen other than the camera view is shown on the display.
- When vehicle speed decreases below approximately 5 MPH (8 km/h).
- When the ignition switch is placed in the "OFF" position and turned back to the "ON" position again.

To prevent the sonar system from activating altogether, use the sonar system settings menu.

Sonar system settings

The camera aiding sonar function settings can be changed using the following procedures.

1. Push the MENU button.
2. Touch [Settings] on the lower display.
3. Touch [Parking Sonar].

The displayed keys on the lower display may vary depending on models, specifications and software versions.

Available setting items:

Setting item		Action
Parking Sonar	Parking Sonar	When this item is turned on, the front and rear sonar is activated. When this item is turned off (indicator turns off), the front and rear sonar is deactivated. The amber markers are displayed at the corners of the vehicle icon. When the Around View® Monitor is activated next time after placing the ignition switch in the ON position, a gray sonar icon will briefly flash on the upper display, indicating that the sonar system is off.
	Auto Show Sonar Image	When the sonar detects an object while this item is turned on, the Around View® Monitor will interrupt the current view in the display to show the surround area of the vehicle.
	Front Only	When this item is turned on, only the front sonar is activated. The amber markers are displayed at the rear corners of the vehicle icon.
	Distance	Adjust the sensitivity level of the sonar.
	Volume	Adjust the tone volume of the sonar.

NOTE:

Do not adjust any of the Parking Sonar settings while the vehicle is moving. Make sure the parking brake is firmly applied.

SONAR SYSTEM LIMITATIONS

WARNING

Listed below are the system limitations for the sonar function. Failure to operate the vehicle in accordance with these system limitations could result in serious injury or death.

- **Inclement weather or ultrasonic sources such as an automatic car wash, a truck's compressed-air brakes or a pneumatic drill may affect the function of the system, including reduced performance or a false activation.**
- **The system is not designed to prevent contact with small or moving objects.**
- **The system will not detect small objects below the bumper, and may not detect objects close to the bumper or on the ground.**
- **The system may not detect the following objects:**
  - **Fluffy objects such as snow, cloth, cotton, grass or wool.**
  - **Thin objects such as rope, wire or chain.**
  - **Wedge-shaped objects.**
- **If your vehicle sustains damage to the bumper fascia, leaving it misaligned or bent, the sensing zone may be altered causing inaccurate measurement of objects or false alarms.**

CAUTION

Excessive noise (such as audio system volume or an open vehicle window) will interfere with the tone and it may not be heard.

System temporarily unavailable

When the amber markers are displayed at the corners of the vehicle icon and the function cannot be activated from the Parking sonar settings menu (the setting items are grayed out), the sonar system may be malfunctioning.

SYSTEM MAINTENANCE

CAUTION

Keep the surface of the sonar (located on the front and rear bumper fascia) free from accumulations of snow, ice and dirt. Do not scratch the surface of the sonar when cleaning. If the sensors are covered, the accuracy of the sonar function will be diminished.

MOVING OBJECT DETECTION (MOD) (if so equipped)

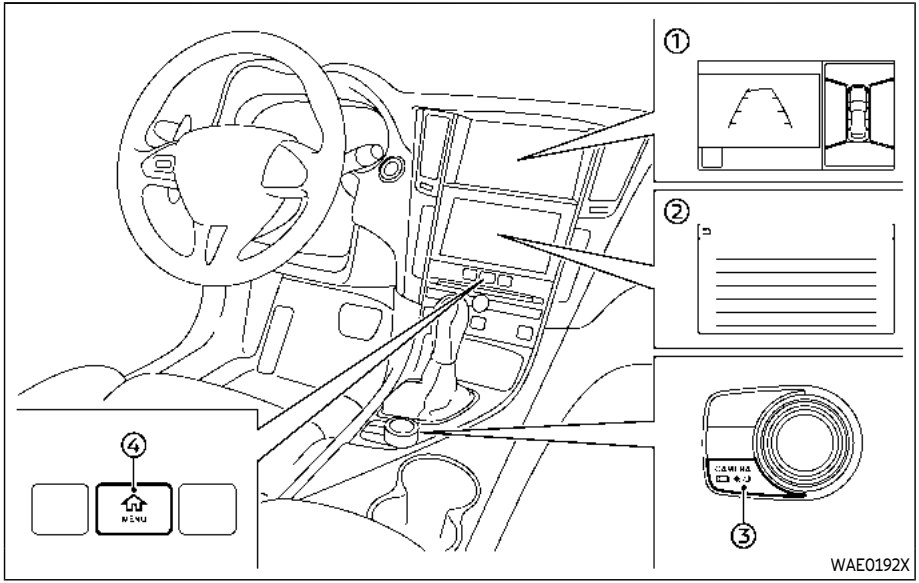

1. Upper touch-screen display (upper display)
2. Lower touch-screen display (lower display)
3. CAMERA button
4. MENU button

WARNING

Failure to follow the warnings and instructions for proper use of the Moving Object Detection system could result in serious injury or death.

- **The MOD system is not a substitute for proper vehicle operation and is not designed to prevent contact with the objects surrounding the vehicle. When maneuvering, always use the outside mirror and rearview mirror and turn and check the surrounding to ensure it is safe to maneuver.**
- **The system is deactivated at speeds above 6 MPH (10 km/h). It is reactivated at lower speeds.**
- **The MOD system is not designed to detect the surrounding stationary objects.**

The Moving Object Detection (MOD) system can inform the driver of the moving objects surrounding the vehicle when driving out of garages, maneuvering into parking lots and in other such instances.

The MOD system detects moving objects by using image processing technology on the image shown on the display.

MOD SYSTEM OPERATION

The MOD system will turn on automatically under the following conditions:

- When the shift lever is in the "R" (Reverse) position.
- When the CAMERA button is pushed to activate the camera view on the display.
- When vehicle speed decreases below approximately 5 MPH (8 km/h) and the camera screen is displayed.

The MOD system operates in the following conditions when the camera view is displayed:

- When the shift lever is in the "P" (Park) or "N" (Neutral) position and the vehicle is stopped, the MOD system detects moving objects in the bird's-eye view. The MOD system will not operate if the outside mirrors are moving in or out, in the stowed position, or if either front door is opened.
- When the shift lever is in the "D" (Drive) position and the vehicle speed is below approximately 5 MPH (8 km/h), the MOD system detects moving objects in the front view or front-wide view.
- When the shift lever is in the "R" (Reverse) position and the vehicle speed is below approximately 5 MPH (8 km/h), the MOD system detects moving objects in the rear view.

The MOD system will not operate if the trunk lid is open.

The MOD system does not detect moving objects in the front-side view. The MOD icon is not displayed on the screen when in this view.

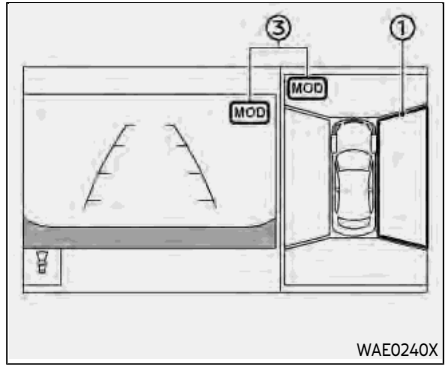

Bird's-eye view

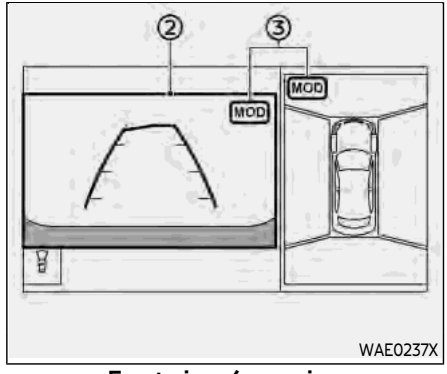

Front view / rear view

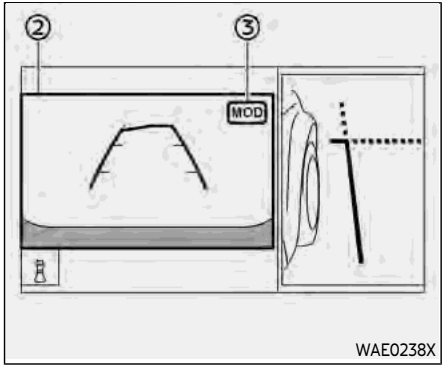

Rear and front-side views

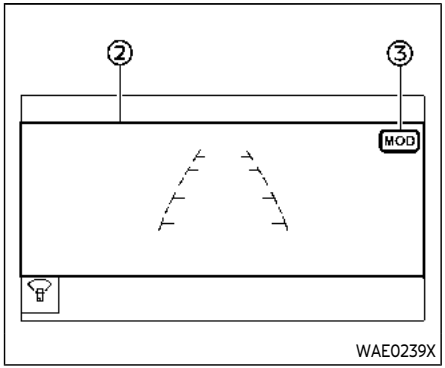

Front-wide view

When the MOD system detects moving objects near the vehicle, a chime will be heard and a yellow frame will be displayed on the view where the objects are detected. While the MOD system continues to detect moving objects, the yellow frame continues to be displayed.

NOTE:

While the sonar/Back-up Collision Intervention (BCI) system (if so equipped) is beeping, the MOD system does not chime.

In the bird's-eye view, the yellow frame ① is displayed on each camera image (front, rear, right, left) depending on where moving objects are detected.

The yellow frame ② is displayed on each view in the front view, front-wide view and rear view modes.

A green MOD icon ③ is displayed in the view where the MOD system is operative. A white MOD icon ③ is displayed in the view where the MOD system is not operative.

If the MOD system is turned off, the MOD icon ③ is not displayed.

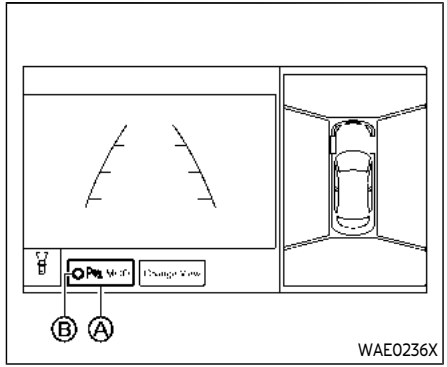

TURNING THE MOD SYSTEM ON AND OFF

When the MOD is active and the Sonar/MOD key Ⓐ is touched, the MOD system will turn off temporarily and the indicator Ⓑ will turn off. (A camera-aiding sonar will turn off at the same time.) When the Sonar/MOD key Ⓐ is touched again, the indicator will turn on and the MOD system will turn back on.

To enable or disable the MOD system, use the camera settings menu.

MOD function setting

The MOD function settings can be changed using the following procedures.

1. Push the MENU button.
2. Touch [Settings] on the lower display.
3. Touch [Camera].
4. Touch [Camera].

Available setting items:

MOD:

When this item is turned on, the MOD system is activated. When this item is turned off (indicator turns off), the MOD system is deactivated.

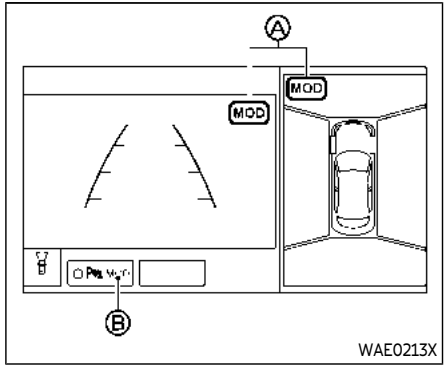

When the MOD system is deactivated, the MOD icon Ⓐ will disappear.

When the sonar is turned off on the settings menu as well, the Sonar/MOD key Ⓑ will disappear.

MOD Volume:

Adjust the volume of the chime.

MOD SYSTEM LIMITATIONS

WARNING

Listed below are the system limitations for MOD. Failure to operate the vehicle in accordance with these system limitations could result in serious injury or death.

- **Excessive noise (for example, audio system volume or open vehicle window) will interfere with the chime sound, and it may not be heard.**
- **The MOD system performance will be limited according to environmental conditions and surrounding objects such as:**
  - **When there is low contrast between background and the moving objects.**
  - **When there is blinking source of light.**
  - **When strong light such as another vehicle's headlight or sunlight is present.**
  - **When camera orientation is not in its usual position, such as when mirror is folded.**

- **When there is dirt, water drops or snow on the camera lens.**
- **When the position of the moving objects in the display is not changed.**

- **The MOD system might detect flowing water droplets on the camera lens, white smoke from the muffler, moving shadows, etc.**
- **The MOD system may not function properly depending on the speed, direction, distance or shape of the moving objects.**
- **If your vehicle sustains damage to the parts where the camera is installed, leaving it misaligned or bent, the sensing zone may be altered and the MOD system may not detect objects properly.**
- **When the temperature is extremely high or low, the screen may not display objects clearly. This is not a malfunction.**

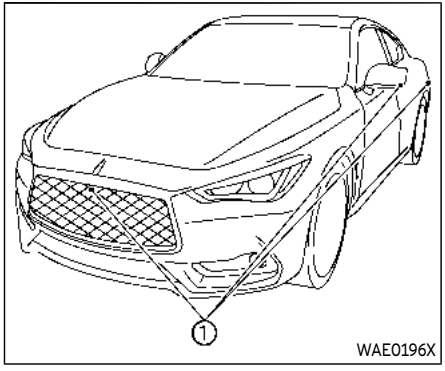

SYSTEM MAINTENANCE

CAUTION

- **Do not use alcohol, benzine or thinner to clean the camera. This will cause discoloration.**
- **Do not damage the camera as the monitor screen may be adversely affected.**

If dirt, rain or snow accumulates on any of the cameras ①, the MOD system may not operate properly. Clean the camera by wiping with a cloth dampened with a diluted mild cleaning agent and then wiping with a dry cloth.

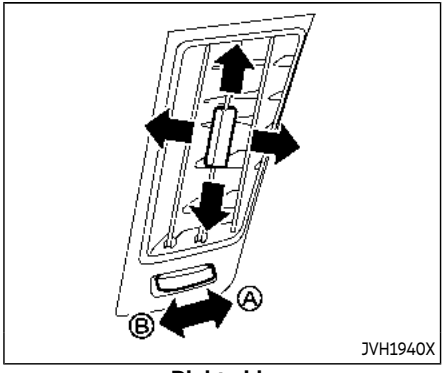

Right side

CENTER VENTILATORS

Open/close the ventilator by moving the control to either direction.

Ⓐ: Moving the control to this direction will open the ventilator.

Ⓑ: Moving the control to this direction will close the ventilator.

Adjust the air flow direction of the ventilator by moving the center knob (up/down, left/right) until the desired position is achieved.

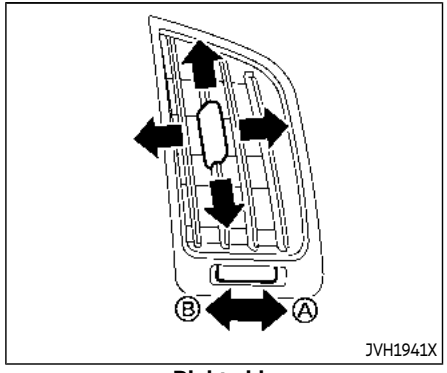

Right side

SIDE VENTILATORS

Open/close the ventilator by moving the control to either direction.

Ⓐ: Moving the control to this direction will open the ventilator.

Ⓑ: Moving the control to this direction will close the ventilator.

Adjust the air flow direction of the ventilator by moving the center knob (up/down, left/right) until the desired position is achieved.

WARNING

- **The heater and air conditioner operate only when the engine is running.**
- **Never leave children or adults who would normally require the support of others alone in the vehicle. Pets should not be left alone either. They could unknowingly activate switches or controls and inadvertently become involved in a serious accident and injure themselves. On hot, sunny days, temperatures in a closed vehicle could quickly become high enough to cause severe or possibly fatal injuries to people or animals.**
- **Do not use the recirculation mode for long periods as it may cause the interior air to become stale and the windows to fog up.**
- **Do not adjust the heating and air conditioning controls while driving so that full attention may be given to vehicle operation.**

The heater and air conditioner operate when the engine is running. The air blower will operate even if the engine is turned off and the ignition switch is placed in the ON position.

NOTE:

- **Odors from inside and outside the vehicle can build up in the air conditioner unit. Odor can enter the passenger compartment through the ventilators.**
- **When parking, set the heater and air conditioner controls to turn off air recirculation to allow fresh air into the passenger compartment. This should help reduce odors inside the vehicle.**
- **Vehicles with an automatic climate control system will automatically adjust the passenger compartment to be the set appropriate temperature when the remote engine start feature (if so equipped) is used.**

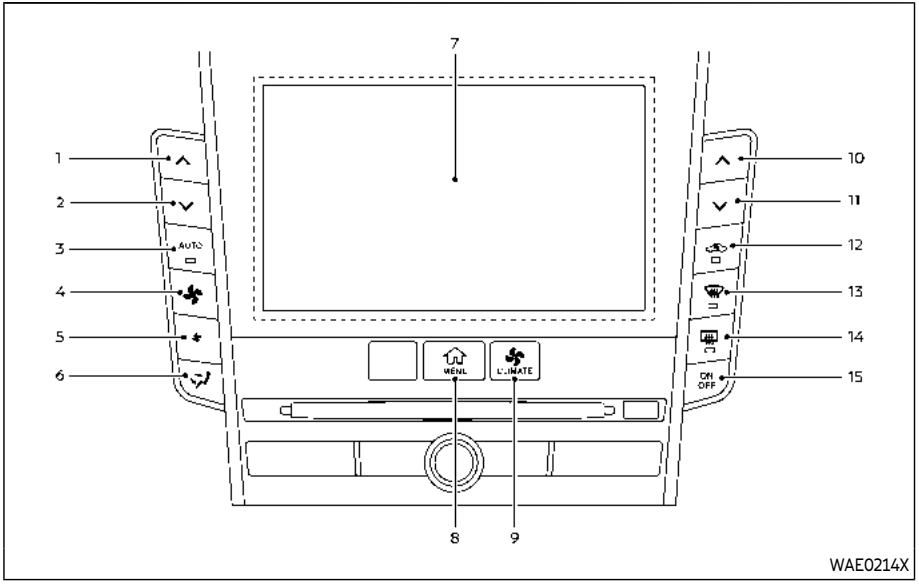

1. " ∧ " Temperature control increase button (driver's side)
2. " ∨ " Temperature control decrease button (driver's side)
3. AUTO button
4. " " Fan speed increase button
5. " " Fan speed decrease button
6. " " Manual air flow control button
7. Lower touch-screen display (lower display)
8. MENU button
9. CLIMATE button
10. " ∧ " Temperature control increase button (front passenger's side)
11. " ∨ " Temperature control decrease button (front passenger's side)
12. " " Air recirculation button
13. " " Front defroster button
14. " " Rear defroster button
    (See "Rear window and outside mirror defroster switch" (P.2-37).)
15. ON/OFF button

AUTOMATIC AIR CONDITIONER

NOTE:

The heater and air conditioning system settings can be linked and memorized for each of the Intelligent Keys. Refer to the INFINITI InTouch™ Owner's Manual.

Automatic operation (AUTO)

The AUTO mode may be used year-round as the system automatically controls the air conditioner to a constant temperature, air flow distribution and fan speed after the desired temperature is set manually.

Cooling and dehumidified heating (AUTO):

1. Push the AUTO button.

   The indicator light on the button will illuminate. The climate screen will be displayed on the lower display and "AUTO" will appear on the climate screen.

2. Push the temperature control buttons (driver's side) to set the preferred temperature.
   - When the DUAL mode is turned on, you can individually set temperatures for the driver's side and front passenger's side, using the temperature control buttons on the corresponding side. (To turn on the DUAL mode, touch [DUAL].).
   - The temperature of the passenger compartment will be maintained automatically. Air flow distribution and fan speed will also be controlled automatically.

A visible mist may be seen coming from the ventilators in hot, humid conditions as the air is cooled rapidly. This does not indicate a malfunction.

Heating (A/C off):

The air conditioner does not activate in this mode. Use this mode when you only need to heat.

1. Push the CLIMATE button.

   The climate screen will be displayed on the lower display.
2. Touch [A/C]. The [A/C] indicator will turn off. See "Operations on touch panel screen" (P.4-38).
3. Push the temperature control buttons (driver's side) to set the preferred temperature.
   - When the DUAL mode is turned on, you can individually set temperatures for the driver's side and front passenger's side, using the temperature control buttons on the corresponding side. (To turn on the DUAL mode, touch [DUAL].).
   - The temperature of the passenger compartment will be maintained automatically. Air flow distribution and fan speed will also be controlled automatically.

NOTE:

- **Do not set the temperature lower than the outside air temperature. Otherwise the system may not work properly.**
- **This mode is not recommended if the windows fog up.**

Dehumidified defrosting/defogging:

1. Push the " " front defroster button. The indicator light on the button will illuminate.
2. Push the temperature control buttons on the driver's side to set the preferred temperature.

NOTE:

- **To quickly remove ice from the outside of the windows, push the " " fan speed increase button and set it to the maximum position.**
- **As soon as possible after the windshield is cleaned, push the AUTO button to return to the AUTO mode.**
- **When the " " front defroster button is pushed, the air conditioner will automatically be turned on at outside temperatures above 23°F (-5°C) to defog the windshield, and the air recirculate mode will automatically be turned off. The outside air circulation mode will be selected to improve the defrosting performance.**

Manual operation

The manual mode can be used to control the heater and air conditioner to your desired settings.

Fan speed control:

Push the " " fan speed increase button to increase the fan speed.

Push the " " fan speed decrease button to decrease the fan speed.

Push the AUTO button to change the fan speed to the automatic mode.

Air flow control:

Push the "" manual air flow control button to change the air flow mode.

- : Air flows from the center and side ventilators.
- : Air flows from the center and side ventilators, and foot outlets.
- : Air flows mainly from the foot outlets.
- : Air flows from the defroster and foot outlets.

Temperature control:

Push the " ∧ " temperature control increase button or the " ∨ " temperature control decrease button to set the desired temperature.

You can individually set temperatures for the driver's side and front passenger's side.

Air intake control:

- Push the "" air recirculation button to recirculate interior air inside the vehicle. The indicator light on the "" air recirculation button will illuminate.
- Push the "" air recirculation button twice to draw outside air into the passenger compartment. The indicator light on the "" air recirculation button will turn off.
- To control the air intake automatically, push and hold the "" air recirculation button. The indicator lights will flash twice, and then the air intake will switch to automatic control.

  The air intake mode can also be controlled automatically by touching [Auto Recirc] (if so equipped). The indicator light on [Auto Recirc] will illuminate. "Operations on touch panel screen" (P.4-38)

Turning the system off

Push the ON/OFF button.

Operations on touch panel screen

Heater and air conditioner can be operated on the touch panel screen. Push the CLIMATE button and switch the lower display to the climate screen.

For details of the touch panel operation on the lower display, see the separate INFINITI InTouch™ Owner's Manual.

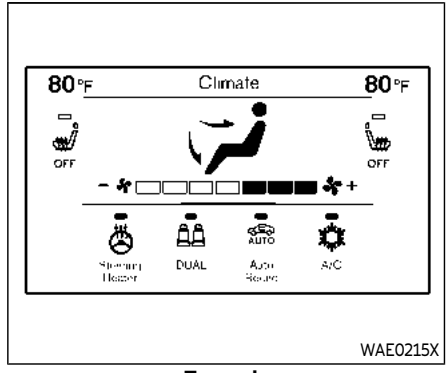

Example

The following control keys are available. (Availability of the item depends on the model and specifications.)

Available items:

- ""
  Touch to change the air flow mode.
- "– " / " +"
  Touch to change the fan speed.
- [DUAL]
  Touch to turn the DUAL mode on/off. (See "DUAL mode setting" (P.4-39).)
- [Steering Heater] (if so equipped)
  Touch to turn the steering wheel heater on/off. (See "Heated steering wheel"

(P.2-47).)

- [A/C]
  Touch to turn the air conditioner on/off. (See "Automatic operation (AUTO)" (P.4-36).)
- [Auto Recirc] (if so equipped)
  Touch to turn the auto-recirculation mode on/off. (See "Advanced Climate Control System" (P.4-39).)
- [ ] or [ ] (if so equipped)
  Touch to turn the seat heater on/off. (See "Heated seats" (P.2-45).)

DUAL mode setting

Touch [DUAL] to turn on/off the DUAL mode. When the DUAL mode is set, the temperature for the driver seat and the front passenger seat can be adjusted independently. When the DUAL mode is on, the indicator light is on and "DUAL" appears.

Advanced Climate Control System (if so equipped)

The Advanced Climate Control System keeps the air inside of the vehicle clean, using the automatic air circulation control with the exhaust gas/outside odor detection sensor and with ion control.

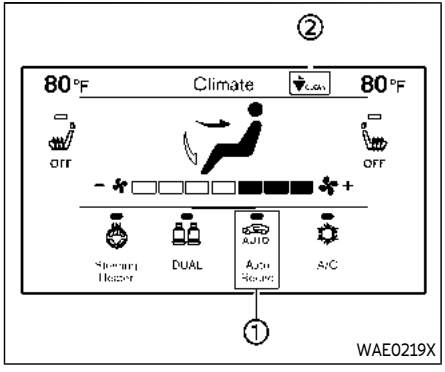

① [Auto Recirc]:
Touch to turn on the automatic air recirculation mode.

② Plasmacluster® icon:
Indicates the Plasmacluster® ion emission status.

Automatic air recirculation control with the exhaust gas/outside odor detection sensor:

The Advanced Climate Control system comes with an exhaust gas detection/outside odor sensor. When the automatic air circulation control is activated, the sensor detects odors outside the vehicle such as pulp or chemicals, and exhaust gas such as gasoline or diesel. When such odors or gases are detected, the display and the system automatically change from the fresh air mode to the recirculation mode.

When the automatic air circulation control mode is on, for the first 5 minutes, the air recirculation mode is selected to prevent dust, dirt and pollen from entering the vehicle and to clean the air inside of the vehicle.

After 5 minutes, the sensor detects exhaust gas and automatically alternates between the air recirculation mode and the fresh air mode.

NOTE:

The automatic air recirculation mode can be activated under the following conditions.

- **The air flow control is not in the windshield defrosting mode (the indicator light on is turned off).**
- **The outside temperature is approximately 32 °F (0 °C) or above.**

Ion control:

The Advanced Climate Control system unit generates highly concentrated Plasmacluster® ions into the air blown from the ventilators to reduce odor absorbed into the interior trim and to suppress airborne bacteria. The high-density Plasmacluster® ions also have a proven skin moisture preserving effect.

The Plasmacluster® icon on the climate screen indicates the status of the Plasmacluster® ion emission from the system and changes with the amount of the air flow.

CLIMATE SETTINGS

Climate settings can be changed on the climate settings screen on the lower display.

1. Push the MENU button and touch [Settings] on the lower display.
2. Touch [Others].
3. Touch [Climate].

The displayed keys on the lower display may vary depending on models, specifications and software versions.

Available settings:

- **Left/Right Seat Heater**
  The driver's seat and front passenger seat temperature settings for the automatic seat heating control mode can be changed separately. (See "Heated seats" (P.2-45).)
- **Steering Wheel Heater**
  The steering wheel heater can be turned on/off. (See "Heated steering wheel" (P.2-47).)
- **Auto Steering Wheel Heater**
  The automatic control mode for the steering wheel heater can be turned on/off. When this item is turned on, the steering wheel heater will turn on automatically if the temperature inside the vehicle compartment is low at the time when the ignition switch is turned on. Regardless of the temperature, the steering wheel heating will turn off after 30 minutes.
  If the steering wheel heater is manually turned on/off by touching [Steering Wheel Heater] on the climate settings screen, the automatic steering wheel heating control mode will be canceled and the system will return to the manual mode.

NOTE:
If the surface temperature of the steering wheel is above the temperature at which the system is designed to operate, the system will not heat the steering wheel. This is not a malfunction.

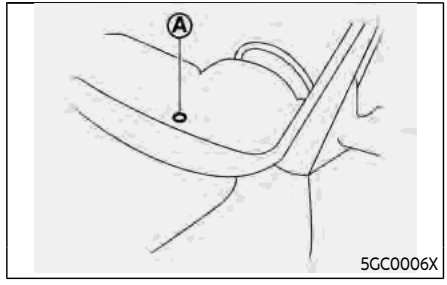

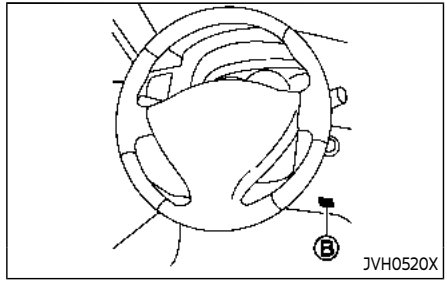

OPERATING TIPS

When the engine coolant temperature and outside air temperature are low, the air flow from the foot outlets may not operate. However, this is not a malfunction. After the coolant temperature warms up, the air flow from the foot outlets will operate

normally.

The sensors Ⓐ and Ⓑ, located on the instrument panel, help maintain a constant temperature. Do not put anything on or around the sensors.

SERVICING AIR CONDITIONER

WARNING

The air conditioner contains refrigerant under high pressure. To avoid personal injury, any air conditioner service should be done only by an experienced technician with the proper equipment.

The air conditioner system in your vehicle is charged with a refrigerant designed with the environment in mind.

This refrigerant will not harm the earth's ozone layer. However, it may contribute in a small part to global warming.

Special charging equipment and lubricant are required when servicing your vehicle's air conditioner. Using improper refrigerants or lubricants will cause severe damage to the air conditioner system. (See "Air conditioning system refrigerant and lubricant recommendations" (P.10-7).)

An INFINITI retailer will be able to service your environmentally friendly air conditioner system.

In-cabin microfilter

With Advanced Climate Control system:

The air conditioning system is equipped with a natural grape seed polyphenol filter which collects and neutralizes dirt, pollen, dust, etc.

To make sure that the air conditioner heats, defogs and ventilates efficiently, replace the filter in accordance with the specified maintenance intervals listed in the separate maintenance booklet. To replace the filter, contact an INFINITI retailer.

The filter should be replaced if the air flow decreases significantly or if windows fog up easily when operating the heater or air conditioner.

Without Advanced Climate Control system:

The air conditioning system is equipped with an in-cabin microfilter that collects dirt, pollen, dust, etc.

To make sure that the air conditioner heats, defogs and ventilates efficiently, replace the filter in accordance with the specified maintenance schedule in the separate maintenance booklet. To replace the filter, contact an INFINITI retailer.

The filter should be replaced if the air flow decreases significantly or if windows fog up easily when operating the heater or air conditioner.

ANTENNA

WINDOW ANTENNA

The antenna pattern is printed inside the rear window.

CAUTION

- **Do not place metalized film near the rear window glass or attach any metal parts to it. This may cause poor reception or noise.**
- **When cleaning the inside of the rear window, be careful not to scratch or damage the rear window antenna. Lightly wipe along the antenna with a dampened soft cloth.**

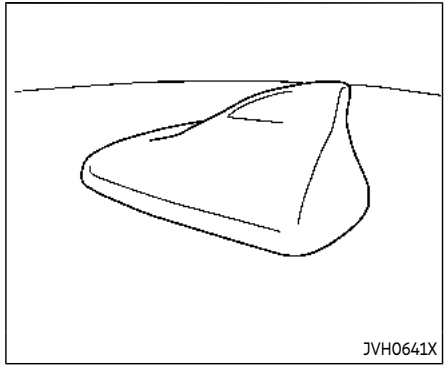

SATELLITE ANTENNA

There is a satellite antenna on the rear part of the vehicle roof.

A buildup of ice on the satellite radio antenna can affect satellite radio performance. Remove the ice to restore satellite radio reception.

CAR PHONE OR CB RADIO

When installing a car phone or a CB radio in your vehicle, be sure to observe the following cautions, otherwise the new equipment may adversely affect the electronic control modules and electronic control system harness.

WARNING

- **A cellular phone should not be used for any purpose while driving so full attention may be given to vehicle operation. Some jurisdictions prohibit the use of cellular phones while driving.**
- **If you must make a call while your vehicle is in motion, the hands-free cellular phone operational mode (if so equipped) is highly recommended. Exercise extreme caution at all times so full attention may be given to vehicle operation.**
- **If a conversation in a moving vehicle requires you to take notes, pull off the road to a safe location and stop your vehicle before doing so.**

CAUTION

- **Keep the antenna as far away as possible from the electronic control modules.**
- **Keep the antenna wire more than 8 in (20 cm) away from the electronic control system harness. Do not route the antenna wire next to any harness.**
- **Adjust the antenna standing-wave ratio as recommended by the manufacturer.**
- **Connect the ground wire from the CB radio chassis to the body.**
- **For details, it is recommended you visit an INFINITI retailer.**

MEMO

5 Starting and driving

Precautions when starting and driving 5-4
Exhaust gas (carbon monoxide) 5-4
Three-way catalyst 5-5
Tire Pressure Monitoring System (TPMS) 5-5
Avoiding collision and rollover 5-9
Off-road recovery 5-9
Rapid air pressure loss 5-10
Drinking alcohol/drugs and driving 5-10
Intelligent All-Wheel Drive (AWD) driving safety precautions (AWD models) 5-11
Push-button ignition switch 5-11
Operating range for engine start function 5-12
Push-button ignition switch operation 5-12
Push-button ignition switch positions 5-13
Emergency engine shut off 5-13
Intelligent Key battery discharge 5-14
Before starting the engine 5-14
Starting the engine 5-15
Remote engine start (if so equipped) 5-15
Driving the vehicle 5-16
Automatic Transmission (AT) 5-16
Parking brake 5-20
INFINITI Drive Mode Selector 5-21
STANDARD mode 5-22
SPORT+ mode (if so equipped) 5-22
SPORT mode 5-22
SNOW mode 5-22
ECO mode 5-22
PERSONAL mode 5-24
Active Lane Control (if so equipped) 5-25
Active Lane Control operation 5-27
Turning Active Lane Control ON/OFF 5-28
How to enable/disable Active Lane Control 5-29
Active Lane Control limitations 5-30
System temporarily unavailable 5-31
System malfunction 5-31
System maintenance 5-32
Lane Departure Warning (LDW) system (if so equipped) 5-33
LDW system operation 5-34
How to enable/disable the LDW system 5-35
LDW system limitations 5-35
System temporarily unavailable 5-36
System malfunction 5-36
System maintenance 5-37
Blind Spot Warning (BSW) (if so equipped) 5-37
BSW system operation 5-39
How to enable/disable the BSW system 5-40
BSW system limitations 5-40

BSW driving situations 5-41
System temporarily unavailable 5-44
System malfunction 5-44
System maintenance 5-44
Blind Spot Intervention® (BSI) (if so equipped) 5-45
BSI system operation 5-47
Turning the BSI system ON/OFF 5-48
How to enable/disable the BSI system 5-49
BSI system limitations 5-49
BSI driving situations 5-51
System temporarily unavailable 5-55
System malfunction 5-56
System maintenance 5-56
Back-up Collision Intervention (BCI) (if so equipped) 5-57
BCI system operation 5-59
Turning the BCI system ON/OFF 5-62
BCI system limitations 5-63
System temporarily unavailable 5-64
System malfunction 5-65
System maintenance 5-65
Cruise control (if so equipped) 5-66
Precautions on cruise control 5-66
Cruise control operations 5-67
Intelligent Cruise Control (ICC) (if so equipped) 5-68
How to select the cruise control mode 5-70
Vehicle-to-vehicle distance control mode 5-71
Conventional (fixed speed) cruise control mode 5-85
Distance Control Assist (DCA) (if so equipped) 5-89
DCA system operation 5-91
Turning the DCA system ON/OFF 5-94
How to enable/disable the DCA system 5-95
DCA system display and indicators 5-95
DCA system limitations 5-96
System temporarily unavailable 5-98
System malfunction 5-99
System maintenance 5-99
Forward Emergency Braking (FEB) with pedestrian detection system (if so equipped) 5-100
FEB with pedestrian detection system operation 5-101
Turning the FEB with pedestrian detection system ON/OFF 5-103
FEB with pedestrian detection system limitations 5-104
System temporarily unavailable 5-107
System malfunction 5-108
System maintenance 5-109
Predictive Forward Collision Warning (PFCW) (if so equipped) 5-110
PFCW system operation 5-112
Turning the PFCW system ON/OFF 5-113
PFCW system limitations 5-115
System temporarily unavailable 5-117
System malfunction 5-118
System maintenance 5-118
Break-in schedule 5-119

Fuel Efficient Driving Tips 5-119
Increasing fuel economy 5-120
Intelligent All-Wheel Drive (AWD) (if so equipped) 5-121
Parking/parking on hills 5-123
Power steering 5-124
Electric power steering type 5-124
Direct Adaptive Steering type 5-124
Brake system 5-126
Braking precautions 5-126
Parking brake break-in 5-127
Brake assist 5-127
Brake assist 5-127
Anti-lock Braking System (ABS) 5-127
Vehicle Dynamic Control (VDC) system 5-129
Brake force distribution 5-129
Active trace control 5-130
Hill Start Assist system 5-132
Chassis control 5-132
Sonar system (if so equipped) 5-133
Sonar system settings 5-134
Sonar indicator 5-135
Cold weather driving 5-135
Freeing a frozen door lock 5-135
Antifreeze 5-135
Battery 5-135
Draining of coolant water 5-135
Tire equipment 5-135
Special winter equipment 5-136
Driving on snow or ice 5-136
Engine block heater (if so equipped) 5-136
Active noise cancellation/Active sound enhancement 5-137
Active noise cancellation 5-138
Active sound enhancement 5-138

WARNING

- **Do not leave children or adults who would normally require the support of others alone in your vehicle. Pets should not be left alone either. They could accidentally injure themselves or others through inadvertent operation of the vehicle. Also, on hot, sunny days, temperatures in a closed vehicle could quickly become high enough to cause severe or possibly fatal injuries to people or animals.**
- **Closely supervise children when they are around cars to prevent them from playing and becoming locked in the trunk where they could be seriously injured. Keep the car locked, with the rear seatback and trunk lid securely latched when not in use, and prevent children's access to car keys.**

EXHAUST GAS (carbon monoxide)

WARNING

- **Do not breathe exhaust gases; they contain colorless and odorless carbon monoxide. Carbon monoxide is dangerous. It can cause unconsciousness or death.**
- **If you suspect that exhaust fumes are entering the vehicle, drive with all windows fully open, and have the vehicle inspected immediately.**
- **Do not run the engine in closed spaces such as a garage.**
- **Do not park the vehicle with the engine running for any extended length of time.**
- **Keep the trunk lid closed while driving, otherwise exhaust gases could be drawn into the passenger compartment. If you must drive with the trunk lid open, follow these precautions:**
  1) **Open all the windows.**
  2) **Set the air recirculation to off and the fan control to high to circulate the air.**
- **If electrical wiring or other cable connections must pass to a trailer through the seal on the trunk lid or the body, follow the manufacturer's recommendation to prevent carbon monoxide entry into the vehicle.**
- **The exhaust system and body should be inspected by a qualified mechanic whenever:**
  - **The vehicle is raised for service.**
  - **You suspect that exhaust fumes are entering into the passenger compartment.**
  - **You notice a change in the sound of the exhaust system.**
  - **You have had an accident involving damage to the exhaust system, underbody, or rear of the vehicle.**

THREE-WAY CATALYST

The three-way catalyst is an emission control device installed in the exhaust system. Exhaust gases in the three-way catalyst are burned at high temperatures to help reduce pollutants.

WARNING

- **The exhaust gas and the exhaust system are very hot. Keep people, animals or flammable materials away from the exhaust system components.**
- **Do not stop or park the vehicle over flammable materials such as dry grass, waste paper or rags. They may ignite and cause a fire.**

CAUTION

- **Do not use leaded gasoline. Deposits from leaded gasoline seriously reduce the three-way catalyst's ability to help reduce exhaust pollutants.**
- **Keep your engine tuned up. Malfunctions in the ignition, fuel injection, or electrical systems can cause overrich fuel flow into the three-way catalyst, causing it to overheat. Do not keep driving if the engine misfires, or if noticeable loss of performance or other unusual operating conditions are detected. Have the vehicle inspected promptly. It is recommended you visit an INFINITI retailer for this service.**
- **Avoid driving with an extremely low fuel level. Running out of fuel could cause the engine to misfire, damaging the three-way catalyst.**
- **Do not race the engine while warming it up.**
- **Do not push or tow your vehicle to start the engine.**

TIRE PRESSURE MONITORING SYSTEM (TPMS)

Each tire, including the spare (if provided), should be checked monthly when cold and inflated to the inflation pressure recommended by the vehicle manufacturer on the vehicle placard or tire inflation pressure label. (If your vehicle has tires of a different size than the size indicated on the vehicle placard or tire inflation pressure label, you should determine the proper tire inflation pressure for those tires.)

As an added safety feature, your vehicle has been equipped with a Tire Pressure Monitoring System (TPMS) that illuminates a low tire pressure telltale when one or more of your tires is significantly under-inflated. Accordingly, when the low tire pressure telltale illuminates, you should stop and check your tires as soon as possible, and inflate them to the proper pressure. Driving on a significantly under-inflated tire causes the tire to overheat and can lead to tire failure. Under-inflation also reduces fuel efficiency and tire tread life, and may affect the vehicle's handling and stopping ability.

For models with run-flat tires, if the vehicle is being driven with one or more flat tires, the low tire pressure warning light will illuminate continuously and a chime will sound for 10 seconds. The flat tire warning will also appear in the vehicle information display. The chime will only sound at the first indication of a flat tire, and the warning light will illuminate continuously. When the flat tire warning is activated, it is recommended you have the system reset and the tire checked and replaced if necessary by an INFINITI retailer. Even if the tire is inflated to the specified COLD tire pressure, the warning light will continue to illuminate until the system is reset by an INFINITI retailer. Your vehicle can be driven for a limited time on a flat tire. See "Run-flat tires" (P.8-31).

Please note that the TPMS is not a substitute for proper tire maintenance, and it is the driver's responsibility to maintain correct tire pressure, even if under-inflation has not reached the level to trigger illumination of the TPMS low tire pressure telltale.

Your vehicle has also been equipped with a TPMS malfunction indicator to indicate when the system is not operating properly. The TPMS malfunction indicator is combined with the low tire pressure telltale. When the system detects a malfunction, the telltale will flash for approximately one minute and then remain continuously illuminated. This sequence will continue upon subsequent vehicle start-ups as long as the malfunction exists. When the malfunction indicator is illuminated, the system may not be able to detect or signal low tire pressure as intended. TPMS malfunctions may occur for a variety of reasons, including the installation of replacement or alternate tires or wheels on the vehicle that prevent the TPMS from functioning properly. Always check the TPMS malfunction telltale after replacing one or more tires or wheels on your vehicle to ensure that the replacement or alternate tires and wheels allow the TPMS to continue to function properly.

Additional information

- Since the spare tire (if so equipped) is not equipped with the TPMS, the TPMS does not monitor the tire pressure of the spare tire.
- The TPMS will activate only when the vehicle is driven at speeds above 16 MPH (25 km/h). Also, this system may not detect a sudden drop in tire pressure (for example a flat tire while driving).
- The low tire pressure warning light does not automatically turn off when the tire pressure is adjusted. After the tire is inflated to the recommended pressure, the vehicle must be driven at speeds above 16 MPH (25 km/h) to activate the TPMS and turn off the low tire pressure warning light. Use a tire pressure gauge to check the tire pressure.
- The "Tire Pressure Low - Add Air" warning appears in the vehicle information display when the low tire pressure warning light is illuminated and low tire pressure is detected. The "Tire Pressure Low - Add Air" warning turns off when the low tire pressure warning light turns off.

  The "Tire Pressure Low - Add Air" warning does not appear if the low tire pressure warning light illuminates to indicate a TPMS malfunction.
- The "Flat Tire - Visit dealer" warning (if so equipped) appears in the vehicle information display when the low tire pressure warning light is illuminated and one or more flat tires are detected.
- Tire pressure rises and falls depending on the heat caused by the vehicle's operation and the outside temperature. Do not reduce the tire pressure after driving because the tire pressure rises after driving. Low outside temperature can lower the temperature of the air inside the tire which can cause a lower tire inflation pressure. This may cause the low tire pressure warning light to illuminate. If the warning light illuminates in low ambient temperature, check the tire pressure for all four tires.
- You can also check the pressure of all tires (except the spare tire) in the vehicle information display. (See "Vehicle information display" (P.2-20).)
- After the ignition switch is placed in the ON position, it may take a period of time for the tire pressure to be displayed while the vehicle is driven. Depending on the radio wave circumstance, tire pressure may not correctly be displayed.

For additional information, see "Low tire pressure warning light" (P.2-14) and "Tire Pressure Monitoring System (TPMS)" (P.6-3).

WARNING

- Radio waves could adversely affect electric medical equipment. Those who use a pacemaker should contact the electric medical equipment manufacturer for the possible influences before use.
- If the low tire pressure warning light illuminates while driving, avoid sudden steering maneuvers or abrupt braking, reduce vehicle speed, pull off the road to a safe location and stop the vehicle as soon as possible. Driving with under-inflated tires may permanently damage the tires and increase the likelihood of tire failure. Serious vehicle damage could occur and may lead to an accident and could result in serious personal injury. Check the tire pressure for all four tires. Adjust the tire pressure to the recommended COLD tire pressure shown on the Tire and Loading Information label to turn the low tire pressure warning light OFF. If the light still illuminates while driving after adjusting the tire pressure, a tire may be flat or the TPMS may be malfunctioning. If you have a flat tire, replace it with a spare tire (if so equipped) or repair it with the emergency tire puncture repair kit (if so equipped) as soon as possible. If no tire is flat and all tires are properly inflated, it is recommended you consult an INFINITI retailer.
- For models with run-flat tires, although you can continue driving with a punctured run-flat tire, remember that vehicle handling stability is reduced, which could lead to an accident and personal injury. Also, driving a long distance at high speeds may damage the tires.
  - Do not drive at speeds above 50 MPH (80 km/h) and do not drive more than approximately 93 miles (150 km) with a punctured run-flat tire. The actual distance the vehicle can be driven on a flat tire depends on outside temperature, vehicle load, road conditions and other factors.
  - If you detect any unusual sounds or vibrations while driving with a punctured run-flat tire, pull off the road to a safe location and stop the vehicle as soon as possible. The tire may be seriously damaged and need to be replaced.
- Since the spare tire is not equipped with the TPMS, when a spare tire is mounted or a wheel is replaced, the TPMS will not function and the low tire pressure warning light will flash for approximately 1 minute. The light will remain on after 1 minute. Have your tires replaced and/or TPMS system reset as soon as possible. It is recommended you visit an INFINITI retailer for these services.
- Replacing tires with those not originally specified by INFINITI could affect the proper operation of the TPMS.
- Do not inject any tire liquid or aerosol tire sealant into the tires, as this may cause a malfunction of the tire pressure sensors (for models not equipped with the emergency tire puncture repair kit).
- INFINITI recommends using only Genuine NISSAN Emergency Tire Sealant provided with your vehicle. Other tire sealants may damage the valve stem seal which can cause the tire to lose air pressure. It is recommended you visit an INFINITI retailer as soon as possible after using tire repair sealant (for models equipped with the emergency tire puncture repair kit).

CAUTION

- **The TPMS may not function properly when the wheels are equipped with tire chains or the wheels are buried in snow.**
- **Do not place metalized film or any metal parts (antenna, etc.) on the windows. This may cause poor reception of the signals from the tire pressure sensors, and the TPMS will not function properly.**

Some devices and transmitters may temporarily interfere with the operation of the TPMS and cause the low tire pressure warning light to illuminate. Some examples are:

- Facilities or electric devices using similar radio frequencies are near the vehicle.
- If a transmitter set to similar frequencies is being used in or near the vehicle.
- If a computer (or similar equipment) or a DC/AC converter is being used in or near the vehicle.

Low tire pressure warning light may illuminate in the following cases.

- If the vehicle is equipped with a wheel and tire without TPMS.
- If the TPMS has been replaced and the ID has not been registered.
- If the wheel is not originally specified by INFINITI.

FCC Notice:

For USA:

This device complies with Part 15 of the FCC Rules. Operation is subject to the following two conditions: (1) This device may not cause harmful interference, and (2) this device must accept any interference received, including interference that may cause undesired operation.

NOTE:

Changes or modifications not expressly approved by the party responsible for compliance could void the user's authority to operate the equipment.

For Canada:

This device complies with Industry Canada licence-exempt RSS standard(s). Operation is subject to the following two conditions:

1. **This device may not cause interference, and**
2. **This device must accept any interference, include interference that may cause undesired operation of the device.**

TPMS with Tire Inflation Indicator

When adding air to an under-inflated tire, the TPMS with Tire Inflation Indicator provides visual and audible signals outside the vehicle to help you inflate the tires to the recommended COLD tire pressure.

Vehicle set-up:

1. Park the vehicle in a safe and level place.
2. Apply the parking brake and place the shift lever in the P (Park) position.
3. Place the ignition switch in the ON position. Do not start the engine.

Operation:

1. Add air to the tire.
2. After a few seconds, the hazard indicators will start flashing.
3. When the designated pressure is reached, the horn beeps once and the hazard indicators stop flashing.
4. Perform the above steps for each tire.

- If the tire is over-inflated more than approximately 4 psi (30 kPa), the horn beeps and the hazard indicators flash 3 times. To correct the pressure, push the core of the valve stem on the tire briefly to release pressure. When the pressure reaches the designated pressure, the horn beeps once.

- If the hazard indicator does not flash within approximately 15 seconds after starting to inflate the tire, it indicates that the Tire Inflation Indicator is not operating.
- The TPMS will not activate the Tire Inflation Indicator under the following conditions:
  - If there is interference from an external device or transmitter
  - The air pressure from the inflation device such as those using a power socket is not sufficient to inflate the tire
  - If an electrical equipment is being used in or near the vehicle
  - There is a malfunction in the TPMS system
  - There is a malfunction in the horn or hazard indicators
- If the Tire Inflation Indicator does not operate due to TPMS interference, move the vehicle about 3 ft (1 m) backward or forward and try again.

If the Tire Inflation Indicator is not working, use a tire pressure gauge.

AVOIDING COLLISION AND ROLLOVER

WARNING

Failure to operate this vehicle in a safe and prudent manner may result in loss of control or an accident.

Be alert and drive defensively at all times. Obey all traffic regulations. Avoid excessive speed, high speed cornering, or sudden steering maneuvers, because these driving practices could cause you to lose control of your vehicle. **As with any vehicle, a loss of control could result in a collision with other vehicles or objects, or cause the vehicle to rollover, particularly if the loss of control causes the vehicle to slide sideways.** Be attentive at all times, and avoid driving when tired. Never drive when under the influence of alcohol or drugs (including prescription or over-the-counter drugs which may cause drowsiness). Always wear your seat belt as outlined in the "Seat belts" (P.1-11) of this manual, and also instruct your passengers to do so.

Seat belts help reduce the risk of injury in collisions and rollovers. **In a rollover crash, an unbelted or improperly belted person is significantly more likely to be injured or killed than a person properly wearing a seat belt.**

OFF-ROAD RECOVERY

If driving the right side or left side wheels may unintentionally leave the road surface. Maintain control of the vehicle by following the procedure below. Please note that this procedure is only a general guide. The vehicle must be driven as appropriate based on the conditions of the vehicle, road and traffic.

1. Remain calm and do not overreact.
2. Do not apply the brakes.
3. Maintain a firm grip on the steering wheel with both hands and try to hold a straight course.
4. When appropriate, slowly release the accelerator pedal to gradually slow the vehicle.
5. If there is nothing in the way, steer the vehicle to follow the road while the vehicle speed is reduced. Do not attempt to drive the vehicle back onto the road surface until vehicle speed is reduced.
6. When it is safe to do so, gradually turn the steering wheel until both tires return to the road surface. When all tires are on the road surface, steer the vehicle to stay in the appropriate driving lane.

- If you decide that it is not safe to return the vehicle to the road surface based on vehicle, road or traffic conditions, gradually slow the vehicle to a stop in a safe place off the road.

RAPID AIR PRESSURE LOSS

Rapid air pressure loss or a "blow-out" can occur if the tire is punctured or is damaged due to hitting a curb or pothole. Rapid air pressure loss can also be caused by driving on under-inflated tires.

Rapid air pressure loss can affect the handling and stability of the vehicle, especially at highway speeds.

Help prevent rapid air pressure loss by maintaining the correct air pressure and visually inspect the tires for wear and damage. See "Wheels and tires" (P.8-25) of this manual.

If a tire rapidly loses air pressure or "blows-out" while driving maintain control of the vehicle by following the procedure below. Please note that this procedure is only a general guide. The vehicle must be driven as appropriate based on the conditions of the vehicle, road and traffic.

WARNING

The following actions can increase the chance of losing control of the vehicle if there is a sudden loss of tire air pressure. Losing control of the vehicle may cause a collision and result in personal injury.

- **The vehicle generally moves or pulls in the direction of the flat tire.**
- **Do not rapidly apply the brakes.**
- **Do not rapidly release the accelerator pedal.**
- **Do not rapidly turn the steering wheel.**

1. Remain calm and do not overreact.
2. Maintain a firm grip on the steering wheel with both hands and try to hold a straight course.
3. When appropriate, slowly release the accelerator pedal to gradually slow the vehicle.
4. Gradually steer the vehicle to a safe location off the road and away from traffic if possible.
5. Lightly apply the brake pedal to gradually stop the vehicle.
6. Turn on the hazard warning flashers and either contact a roadside emergency service to change the tire or see "Jacking up the vehicle and replacing tires" (P.8-37) of this Owner's Manual.

DRINKING ALCOHOL/DRUGS AND DRIVING

WARNING

Never drive under the influence of alcohol or drugs. Alcohol in the bloodstream reduces coordination, delays reaction time and impairs judgement. Driving after drinking alcohol increases the likelihood of being involved in an accident injuring yourself and others. Additionally, if you are injured in an accident, alcohol can increase the severity of the injury.

INFINITI is committed to safe driving. However, you must choose not to drive under the influence of alcohol. Every year thousands of people are injured or killed in alcohol-related accidents. Although the local laws vary on what is considered to be legally intoxicated, the fact is that alcohol affects all people differently and most people underestimate the effects of alcohol.

Remember, drinking and driving don't mix! And that is true for drugs, too (over-the-counter, prescription, and illegal drugs). Don't drive if your ability to operate your vehicle is impaired by alcohol, drugs, or some other physical condition.

INTELLIGENT ALL-WHEEL DRIVE (AWD) DRIVING SAFETY PRECAUTIONS (AWD models)

WARNING

- **Do not drive beyond the performance capability of the tires, even with Intelligent AWD engaged. Accelerating quickly, sharp steering maneuvers or sudden braking may cause loss of control.**
- **Always use tires of the same type, size, brand, construction (bias, bias-belted or radial), and tread pattern on all four wheels. Install tire chains on the rear wheels when driving on slippery roads and drive carefully.**
- **This vehicle is not designed for off-road (rough road) use. Do not drive on sandy or muddy roads that tires may get stuck in.**
- **For AWD equipped vehicles, do not attempt to raise two wheels off the ground and shift the transmission to any D (Drive) or R (Reverse) position with the engine running. Doing so may result in drivetrain damage or unexpected vehicle movement which could result in serious vehicle damage or personal injury.**
- **Do not attempt to test an AWD equipped vehicle on a 2-wheel dynamometer (such as the dynamometers used by some states for emissions testing), or similar equipment even if the other two wheels are raised off the ground. Make sure you inform test facility personnel that your vehicle is equipped with AWD before it is placed on a dynamometer. Using the wrong test equipment may result in drivetrain damage or unexpected vehicle movement which could result in serious vehicle damage or personal injury.**
- **When a wheel is off the ground due to an unlevel surface, do not spin the wheel excessively.**

WARNING

Do not operate the push-button ignition switch while driving the vehicle except in an emergency. (The engine will stop when the ignition switch is pushed 3 consecutive times or the ignition switch is pushed and held for more than 2 seconds.) If the engine stops while the vehicle is being driven, this could lead to a crash and serious injury.

Before operating the push-button ignition switch, be sure to move the shift lever to the P (Park) position.

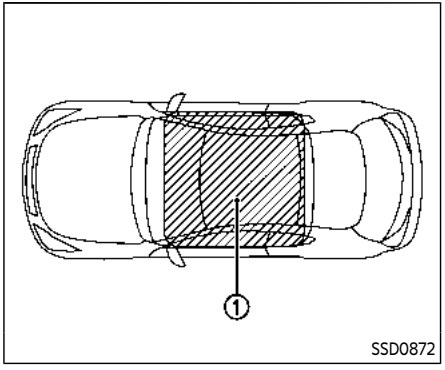

OPERATING RANGE FOR ENGINE START FUNCTION

The Intelligent Key can only be used for starting the engine when the Intelligent Key is within the specified operating range ①.

When the Intelligent Key battery is almost discharged or strong radio waves are present near the operating location, the Intelligent Key system's operating range becomes narrower and may not function properly.

If the Intelligent Key is within the operating range, it is possible for anyone, even someone who does not carry the Intelligent Key, to push the ignition switch to start the engine.

- The trunk area is not included in the operating range but the Intelligent Key may function.
- If the Intelligent Key is placed on the instrument panel, rear parcel shelf, inside the glove box or door pocket, the Intelligent Key may not function.
- If the Intelligent Key is placed near the door or window outside the vehicle, the Intelligent Key may function.

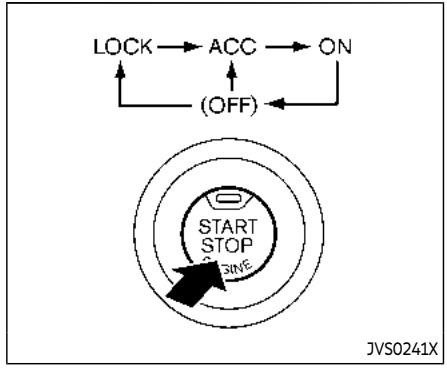

PUSH-BUTTON IGNITION SWITCH OPERATION

When the ignition switch is pushed without depressing the brake pedal, the ignition switch position will change as follows:

- Push center once to change to ACC.
- Push center two times to change to ON.
- Push center three times to change to OFF. (No position illuminates.)
- Push center four times to return to ACC.
- Open or close any door to return to LOCK during the OFF position.

If the battery of the vehicle is discharged, the push-button ignition switch cannot be turned from the LOCK position.

Some indicators and warnings for operation are displayed in the vehicle information display between the speedometer and tachometer. (See "Vehicle information display" (P.2-20).)

The ignition lock is designed so that the ignition switch position cannot be switched to LOCK until the shift lever is moved to the P (Park) position.

When the ignition switch cannot be pushed toward the LOCK position, proceed as follows:

1. Move the shift lever into the P (Park) position.
2. Push the ignition switch to the OFF position. The ignition switch position indicator will not illuminate.
3. Open the door. The ignition switch will change to the LOCK position.

The shift lever can be moved from the P (Park) position if the ignition switch is in the ON position and the brake pedal is depressed.

PUSH-BUTTON IGNITION SWITCH POSITIONS

LOCK (Normal parking position)

The ignition switch can only be locked in this position.

The ignition switch will be unlocked when it is pushed to the ACC position while carrying the Intelligent Key.

ACC (Accessories)

This position activates electrical accessories such as the radio, when the engine is not running.

ON (Normal operating position)

This position turns on the ignition system and electrical accessories.

OFF

The engine can be turned off in this position.

The ignition lock is designed so that the ignition switch cannot be switched to the LOCK position until the shift lever is moved to the P (Park) position.

CAUTION

Do not leave the vehicle with the push-button ignition switch in ACC or ON positions when the engine is not running for an extended period. This can discharge the battery.

EMERGENCY ENGINE SHUT OFF

To shut off the engine in an emergency situation while driving, perform the following procedure:

- Rapidly push the push-button ignition switch 3 consecutive times in less than 1.5 seconds, or
- Push and hold the push-button ignition switch for more than 2 seconds.

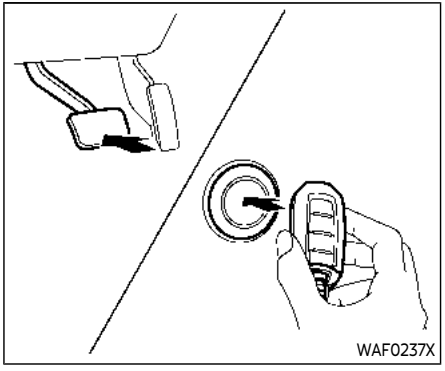

INTELLIGENT KEY BATTERY DISCHARGE

If the battery of the Intelligent Key is discharged, or environmental conditions interfere with the Intelligent Key operation, start the engine according to the following procedure:

1. Move the shift lever to the P (Park) position.
2. Firmly apply the foot brake.
3. Touch the ignition switch with the Intelligent Key as illustrated. (A chime will sound.)
4. Push the ignition switch while depressing the brake pedal within 10 seconds after the chime sounds. The engine will start.

After step 3 is performed, when the ignition switch is pushed without depressing the brake pedal, the ignition switch position will change to ACC.

NOTE:

- **When the ignition switch is pushed to the ACC or ON position or the engine is started by the above procedures, the Intelligent Key battery discharge indicator appears in the vehicle information display even if the Intelligent Key is inside the vehicle. This is not a malfunction. To turn off the Intelligent Key battery discharge indicator, touch the ignition switch with the Intelligent Key again.**
- **If the Intelligent Key battery discharge indicator appears, replace the battery as soon as possible. (See "Intelligent Key battery replacement" (P.8-19).)**

- Make sure the area around the vehicle is clear.
- Check fluid levels such as engine oil, coolant, brake fluid and window washer fluid as frequently as possible, or at least whenever you refuel.
- Check that all windows and lights are clean.
- Visually inspect tires for their appearance and condition. Also check tires for proper inflation.
- Lock all doors.
- Position seat and adjust head restraints.
- Adjust inside and outside mirrors.
- Fasten seat belts and ask all passengers to do likewise.
- Check the operation of warning lights when the ignition switch is pushed to the ON position. (See "Warning lights, indicator lights and audible reminders" (P.2-12).)

STARTING THE ENGINE

1. Apply the parking brake.
2. Move the shift lever to the P (Park) or N (Neutral) position. (P is recommended.)

   The starter is designed not to operate unless the shift lever is in either of the above positions.
3. Push the ignition switch to the ON position. Firmly depress the brake pedal and push the ignition switch to start the engine.

   To start the engine immediately, push and release the ignition switch while depressing the brake pedal with the ignition switch in any position.
   - If the engine is very hard to start in extremely cold weather or when restarting, depress the accelerator pedal a little (approximately 1/3 to the floor) and while holding, crank the engine. Release the accelerator pedal when the engine starts.
   - If the engine is very hard to start because it is flooded, depress the accelerator pedal all the way to the floor and hold it. Push the ignition switch to the ON position to start cranking the engine. After 5 or 6 seconds, stop cranking by pushing the ignition switch to OFF. After cranking the engine, release the accelerator pedal. Crank the engine **with your foot off the accelerator pedal** by depressing the brake pedal and pushing the push-button ignition switch to start the engine. If the engine starts, but fails to run, repeat the above procedure.

CAUTION

Do not operate the starter for more than 15 seconds at a time. If the engine does not start, push the ignition switch to OFF and wait 10 seconds before cranking again, otherwise the starter could be damaged.

4. **Warm-up**

   Allow the engine to idle for at least 30 seconds after starting. Do not race the engine while warming it up. Drive at moderate speed for a short distance first, especially in cold weather. In cold weather, keep the engine running for a minimum of 2 - 3 minutes before shutting it off. Starting and stopping the engine over a short period of time may make the vehicle more difficult to start.

   When racing the engine up to 4,500 rpm or more under no load condition, the engine will enter the fuel cut mode.
5. To stop the engine, shift the shift lever to the P (Park) position and push the ignition switch to the OFF position.

NOTE:

Care should be taken to avoid situations that can lead to potential battery discharge and potential no-start conditions such as:

1. **Installation or extended use of electronic accessories that consume battery power when the engine is not running (Phone chargers, GPS, DVD players, etc.)**
2. **Vehicle is not driven regularly and/or only driven short distances.**

In these cases, the battery may need to be charged to maintain battery health.

REMOTE ENGINE START (if so equipped)

Vehicles started with the remote engine start function require the ignition switch to be placed in the ON position before the shift lever can be moved from the P (Park) position. To place the ignition switch in the ON position, perform the following steps:

1. Make sure that the Intelligent Key is on you.
2. Depress the brake pedal.
3. Push the ignition switch once to the ON position.

For additional information about the remote engine start function, see “Remote engine start” (P.3-19).

AUTOMATIC TRANSMISSION (AT)

The Automatic Transmission (AT) in your vehicle is electronically controlled by a transmission control module to produce maximum efficiency and smooth operation.

Shown on the following pages are the recommended operating procedures for this transmission. Follow these procedures for maximum vehicle performance and driving enjoyment.

Starting the vehicle

After starting the engine, fully depress the foot brake pedal and push the shift lever button before shifting the shift lever to the R (Reverse), N (Neutral), D (Drive) or Manual shift mode position. Be sure the vehicle is fully stopped before attempting to shift the shift lever.

This Automatic Transmission (AT) model is designed so that the foot brake pedal must be depressed before shifting from P (Park) to any drive position while the ignition switch is in the ON position.

The shift lever cannot be moved out of the P (Park) position and into any of the other gear positions if the ignition switch is placed in the LOCK, OFF or ACC position.

1. Keep the foot brake pedal depressed and push the shift lever button to shift into a driving gear.
2. Release the parking brake and foot brake, then gradually start the vehicle in motion.

WARNING

- **Do not depress the accelerator pedal while shifting from P (Park) or N (Neutral) to R (Reverse), D (Drive) or manual shift mode. Always depress the brake pedal until shifting is completed. Failure to do so could cause you to lose control and have an accident.**
- **Cold engine idle speed is high, so use caution when shifting into a forward or reverse gear before the engine has warmed up.**
- **Never shift to either P (Park) or R (Reverse) position while the vehicle is moving forward and P (Park) or D (Drive) position while the vehicle is moving reversing. This could cause an accident or damage the transmission.**
- **Do not downshift abruptly on slippery roads. This may cause a loss of control.**

CAUTION

- **To avoid possible damage to your vehicle; when stopping the vehicle on an uphill grade, do not hold the vehicle by depressing the accelerator pedal. The foot brake should be used for this purpose.**
- **Except in an emergency, do not shift to the N (Neutral) position while driving. Coasting with the transmission in the N (Neutral) position may cause serious damage to the transmission.**

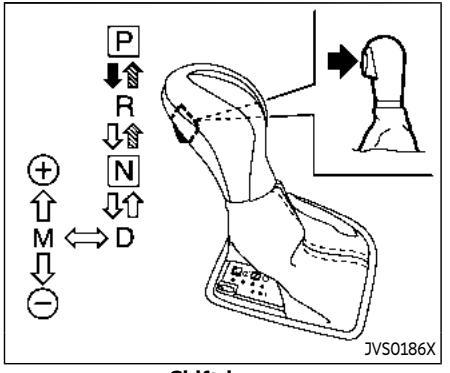

Shift lever

To move the shift lever,

➡: Push the button while depressing the brake pedal,

▨: Push the button,

⇨: Just move the shift lever.

Shifting

After starting the engine, fully depress the brake pedal and shift the shift lever from P (Park) to R (Reverse), N (Neutral), D (Drive) or Manual shift mode position.

Push the button to shift into P (Park) or R (Reverse). All other positions can be selected without pushing the button.

WARNING

Apply the parking brake if the shift lever is in any position while the engine is not running. Failure to do so could cause the vehicle to move unexpectedly or roll away and result in serious personal injury or property damage.

CAUTION

Make sure the vehicle is completely stopped and the transmission is in the P (Park) position.

P (Park) position:

Use this position when the vehicle is parked or when starting the engine. Make sure the vehicle is completely stopped. **The brake pedal must be depressed and the shift lever button pushed in to move the shift lever from the N (Neutral) position or any drive position to the P (Park) position.** Apply the parking brake. When parking on a hill, apply the parking brake first, then move the shift lever to the P (Park) position.

CAUTION

Use this position only when the vehicle is completely stopped.

R (Reverse):

Use this position to back up. Always be sure the vehicle is completely stopped before selecting the R (Reverse) position. **The brake pedal must be depressed and the shift lever button pushed in to move the shift lever from the P (Park) position, the N (Neutral) position or any drive position to the R (Reverse) position.**

N (Neutral):

Neither forward nor reverse gear is engaged. The engine can be started in this position. You may shift to the N (Neutral) position and restart a stalled engine while the vehicle is moving.

D (Drive):

Use this position for all normal forward driving.

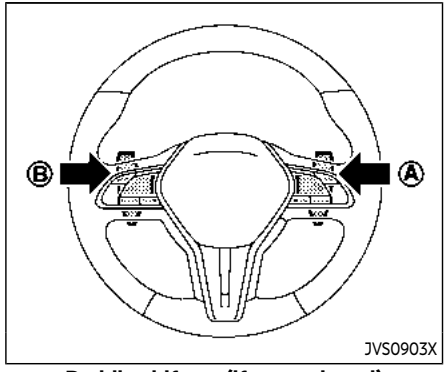

Paddle shifters (if so equipped)

Manual shift mode

When the shift lever is in the manual shift gate, the transmission is ready for the manual shift mode. Shift ranges can be selected manually by moving the shift lever up or down, or pulling the right-side or left-side paddle shifter (if so equipped).

When shifting up, move the shift lever to the + (up) side or pull the right-side paddle shifter (+) Ⓐ (if so equipped). The transmission shifts to the higher range.

When shifting down, move the shift lever to the – (down) side or pull the left-side paddle shifter (–) Ⓑ (if so equipped). The transmission shifts to the lower range.

When canceling the manual shift mode, return the shift lever to the D (Drive) position. The transmission returns to the normal driving mode.

When you pull the paddle shifter (if so equipped) while in the D (Drive) position, the transmission will shift to the upper or lower range temporarily. The transmission will automatically return to the D (Drive) position after a short period of time. If you want to return to the D (Drive) position manually, pull and hold the paddle shifter for about 1.5 seconds.

In the manual shift mode, the shift range is displayed in the vehicle information display.

Shift ranges up or down one by one as follows:

$$1^M \rightleftarrows 2^M \rightleftarrows 3^M \rightleftarrows 4^M \rightleftarrows 5^M \rightleftarrows 6^M \rightleftarrows 7^M$$

7^M (7th):

Use this position for all normal forward driving at highway speeds.

6^M (6th) and 5^M (5th):

Use these positions when driving up long slopes, or for engine braking when driving down long slopes.

4^M (4th), 3^M (3rd) and 2^M (2nd):

Use these positions for hill climbing or engine braking on downhill grades.

1^M (1st):

Use this position when climbing steep hills slowly or driving slowly through deep snow, or for maximum engine braking on steep downhill grades.

- Remember not to drive at high speeds for extended periods of time in lower than 7th gear. This reduces fuel economy.
- Moving the shift lever rapidly to the same side twice will shift the ranges in succession.
- **In the manual shift mode, the transmission may not shift to the selected gear or may automatically shift to the other gear. This helps maintain driving performance and reduces the chance of vehicle damage or loss of control.**
- **When the transmission does not shift to the selected gear, the Automatic Transmission (AT) position indicator (in the vehicle information display) will blink and the buzzer will sound.**
- **In the manual shift mode, the transmission automatically shifts down to 1st gear before the vehicle comes to a stop. When accelerating again, it is necessary to shift up to the desired range.**

Accelerator downshift – In D (Drive) position –

For passing or hill climbing, fully depress the accelerator pedal to the floor. This shifts the transmission down into the lower gear, depending on the vehicle speed.

Fail-safe

When the fail-safe operation occurs, note that the transmission will be locked in any of the forward gears according to the condition.

If the vehicle is driven under extreme conditions, such as excessive wheel spinning and subsequent hard braking, the fail-safe system may be activated. This will occur even if all electrical circuits are functioning properly. In this case, push the ignition switch to the OFF position and wait for 3 seconds. Then push the ignition switch back to the ON position. The vehicle should return to its normal operating condition. If it does not return to its normal operating condition, have the transmission checked and repaired, if necessary. It is recommended you visit an INFINITI retailer for this service.

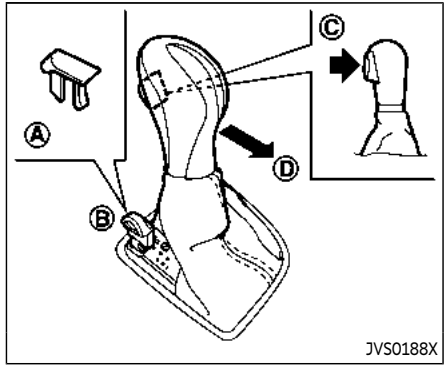

Shift lock release

If the battery charge is low or discharged, the shift lever may not be moved from the P (Park) position even with the brake pedal depressed and the shift lever button pushed.

To move the shift lever, perform the following procedure:

1. Push the ignition switch to the OFF or LOCK position.
2. Apply the parking brake.
3. Remove the shift lock cover Ⓐ using a suitable tool.
4. Push down the shift lock Ⓑ using mechanical key as illustrated.

5. Push the shift lever button Ⓒ and move the shift lever to N (Neutral) position Ⓓ while holding down the shift lock.

If the lever cannot be moved out of P (Park), have the automatic transmission system checked as soon as possible. It is recommended you visit an INFINITI retailer for this service.

Adaptive Shift Control (ASC)

The adaptive shift control system automatically operates when the transmission is in the D (Drive) position and selects an appropriate gear depending on the road conditions such as uphill, downhill or curving roads.

Control on uphill and curving roads:

A low gear is maintained that suits the degree of the slope or curve to allow smooth driving with a small number of shifts.

Control on downhill roads:

The adaptive shift control system shifts to a low gear that suits the degree of the slope, and uses the engine braking to reduce the number of times that the brake must be used.

Control on winding roads:

A low gear is maintained on continuous curves that involve repeated acceleration and deceleration, so that smooth acceleration is available instantly when the accelerator pedal is depressed.

NOTE:

- **Adaptive shift control may not operate when the transmission oil temperature is low immediately after the start of driving or when it is very hot.**
- **During some driving situations, hard braking for example, the adaptive shift control may automatically operate. The transmission may automatically shift to a lower gear for engine braking. This increases engine speed but not vehicle speed. Vehicle speed is controlled by the accelerator pedal when the vehicle is in the Adaptive shift control mode.**
- **When the adaptive shift control operates, the transmission sometimes maintains a lower gear for a longer period of time than when adaptive shift control is not operating. Engine speed will be higher for a specific vehicle speed while ASC system is operating than when ASC is not operating.**

⚠ WARNING

- **Be sure the parking brake is fully released before driving. Failure to do so can cause brake failure and lead to an accident.**
- **Do not release the parking brake from outside the vehicle.**
- **Do not use the gear shift in place of the parking brake. When parking, be sure the parking brake is fully engaged.**
- **To help avoid risk of injury or death through unintended operation of the vehicle and/or its systems, do not leave children, people who require the assistance of others or pets unattended in your vehicle. Additionally, the temperature inside a closed vehicle on a warm day can quickly become high enough to cause a significant risk of injury or death to people and pets.**

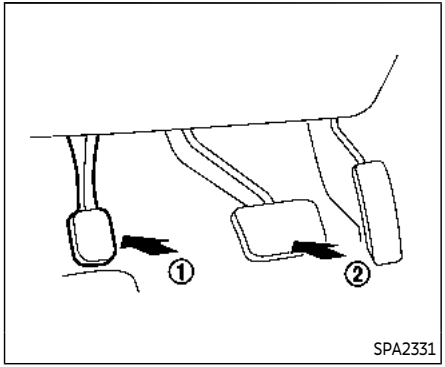

To apply: Fully depress the parking brake pedal ①.

To release:

1. Firmly apply the foot brake ②.
2. Depress the parking brake pedal ① and the parking brake will be released.
3. Before driving, be sure the brake warning light goes out.

INFINITI DRIVE MODE SELECTOR

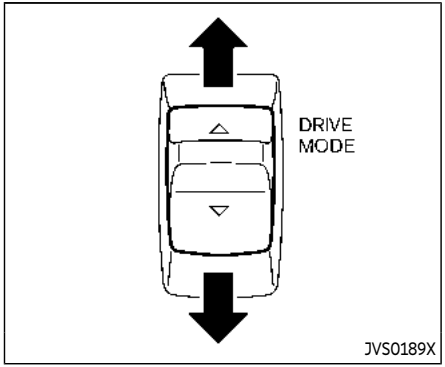

INFINITI Drive Mode Selector

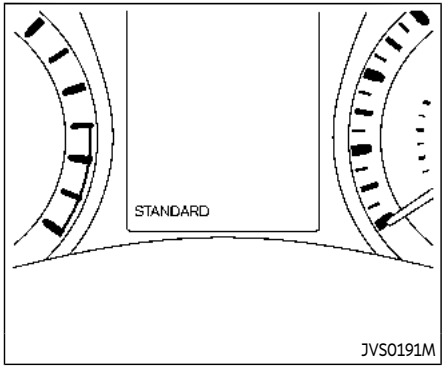

Multiple driving modes can be selected by using the INFINITI Drive Mode Selector (PERSONAL, SPORT+ (if so equipped), SPORT, STANDARD, ECO and SNOW).

NOTE:

When the INFINITI Drive Mode Selector selects a mode, the mode may not switch immediately. This is not a malfunction.

The current mode is displayed in the vehicle information display.

To change the mode, push the INFINITI Drive Mode Selector up or down. The mode list will appear on the upper display and you can select the mode.

PERSONAL ⇔ SPORT+ (if so equipped) ⇔ SPORT ⇔ STANDARD ⇔ ECO ⇔ SNOW

NOTE:

The mode list will be turned off in approximately 5 seconds after the mode is selected.

If the driving mode cannot be switched using the INFINITI Drive Mode Selector when the ignition switch is in the ON position, have the system checked. It is recommended you visit an INFINITI retailer for this service.

STANDARD MODE

Allows for optimum driving according to the driving conditions.

This mode will be selected first each time the engine is started.

SPORT+ MODE (if so equipped)

In addition to the characteristics of the SPORT mode, this mode heightens steering response and changes the setting of VDC (Vehicle Dynamic Control) for a more sporty driving experience.

NOTE:

- **VDC operation is reduced when the INFINITI Drive Mode Selector is used to select the SPORT+ mode. The VDC system may not operate in the same circumstances when compared to operation in the standard mode. To help prevent accidents drive carefully, avoid careless or dangerous driving techniques and be especially careful when driving and cornering on slippery surfaces.**
- **In the SPORT+ mode, fuel economy may be reduced.**

SPORT MODE

- Adjusts the engine and transmission points for a higher response.
- The setting of the steering system is adjusted to provide a quick steering response and a heavy steering effort.
- The setting of the suspension system is adjusted to increase the damping force (if so equipped).

NOTE:

In the SPORT mode, fuel economy may be reduced.

SNOW MODE

Changes the engine characteristics to aid driving on slippery roads.

ECO MODE

Assists the driver's eco-driving. The engine and transmission points are adjusted for improved fuel economy, providing such a driving features as smooth starting or constant cruising.

NOTE:

Selecting the ECO mode will not necessarily improve fuel economy as many driving factors influence its effectiveness.

Operation

Select the ECO mode using the INFINITI Drive Mode Selector. The ECO drive indicator light on the instrument panel illuminates.

When the accelerator pedal is depressed within the range of economy drive, the ECO drive indicator light illuminates in green. When the accelerator pedal is depressed above the range of economy drive, the ECO drive indicator light turns off. For ECO pedal system equipped models, see “ECO pedal system” (P.5-22).

The ECO drive indicator light will not illuminate in the following cases:

- When the shift lever is in the R (Reverse) position.
- When the vehicle speed is below 2 MPH (3.2 km/h) or over 90 MPH (144 km/h).
- When the cruise control (if so equipped) or the Intelligent Cruise Control (ICC) system (if so equipped) is operated.

ECO pedal system (if so equipped)

The ECO pedal system helps assist the driver to improve fuel economy by increasing the reaction force of the accelerator pedal. When the ECO drive indicator light is blinking or remains off, the ECO pedal system increases the reaction force of the accelerator pedal.

ECO drive indicator light	Illuminate or blink when
ECO Illuminate (green)	When the pedal is depressed within range of economy drive
ECO Blink (green)	When the pedal is depressed almost over the range of economy drive
No; illuminate (off)	When the pedal is depressed over the range of economy drive

JVS0934X

When the ECO drive indicator illuminates in green, the accelerator reaction force is normal. When the ECO drive indicator light is blinking or remains off, the ECO pedal system increases the reaction force of the accelerator pedal.

The ECO pedal system may not vary accelerator reaction force under the following conditions:

- When the shift lever is in the N (Neutral) or R (Reverse) position.
- When Intelligent Cruise Control (ICC) is being operated.

If the ECO pedal system malfunctions, it will cancel automatically. The ECO pedal system will not vary the reaction force of the accelerator pedal.

When the INFINITI Drive Mode Selector is rotated from the ECO mode to another mode (STANDARD, SPORT+ (if so equipped), SPORT, SNOW or PERSONAL) while the ECO pedal system is operating, the ECO pedal system continues to operate until the accelerator pedal is released.

If the accelerator pedal is depressed quickly, the ECO pedal system will not increase the reaction force of the acceleration pedal. The ECO pedal system is not designed to prevent the vehicle from accelerating.

Adjusting the ECO pedal system reaction force:

The ECO pedal system reaction force can be adjusted. The reaction force setting will be maintained until the setting is changed even if the engine is turned off.

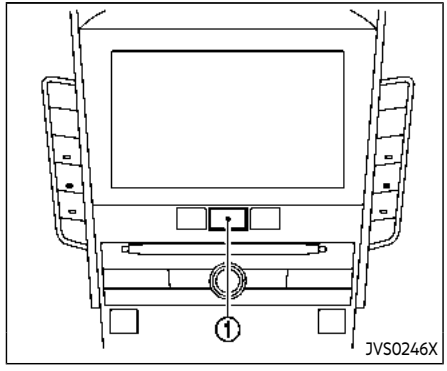

JVS0246X

Setting ECO pedal reaction force:

1. Push the MENU button ① and touch [Settings] on the lower display.
2. Touch [Drive Mode Enhancement].
3. Touch [ECO Pedal].
4. To set the reaction force of the ECO pedal system, touch [Standard] or [Soft].
5. To turn off the ECO pedal system, touch [Off].

When the ECO pedal system is turned off, the accelerator will operate normally.

The displayed keys on the lower display may vary depending on models, specifications and software versions.

PERSONAL MODE

When the PERSONAL mode is selected, the following functions can be adjusted individually.

- Engine/Transmission
- Steering
- Suspension (if so equipped)
- Active Trace Control

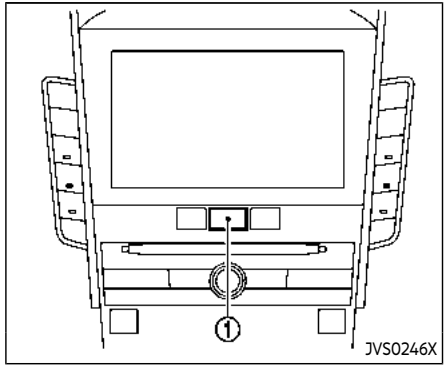

How to set the PERSONAL mode

Perform the following steps to set the PERSONAL mode.

1. Push the MENU button ① and touch [Drive Mode Selector] on the lower display.
2. Touch [Engine/Transmission], [Steering], [Suspension] (if so equipped) or [Active Trace Control] and select each item. (See "Engine/Transmission", "Steering", "Suspension" and "Active Trace Control" about the feature of each item.)
3. Touch [Back] or [Home] to finish the PERSONAL mode setting.

The displayed keys on the lower display may vary depending on models, specifications and software version.

Engine/Transmission:

"Engine/Transmission" can be set to [Sport], [Eco], [Standard] or [Snow].

Steering (models with Direct Adaptive Steering):

Multiple combinations of steering mode and steering response can be set.

Mode	Response
Sport+ (if so equipped)	Dynamic+
	Dynamic
	Default
Sport	Dynamic+
	Dynamic
	Default
Standard	Default

Steering (models without Direct Adaptive Steering):

"Steering" can be set to [Sport] or [Standard].

Suspension (if so equipped):

"Suspension" can be set to [Sport] or [Standard].

Active Trace Control:

"Active Trace Control" can be set to ON (enabled) or OFF (disabled).

For details about the Active Trace Control, see "Active trace control" (P.5-130).

Reset Drive Mode Settings to Default:

Touch [Reset Drive Mode Settings to Default] and touch [OK] to restore all the PERSONAL mode settings to default.

WARNING

Failure to follow the warnings and instructions for proper use of Active Lane Control could result in serious injury or death.

- **Active Lane Control will not always steer the vehicle to keep it in the lane. It is not designed to prevent loss of control. It is the driver's responsibility to stay alert, drive safely, keep the vehicle in the traveling lane, and be in control of vehicle at all times.**

Active Lane Control enables the driver to make fewer steering corrections on freeways.

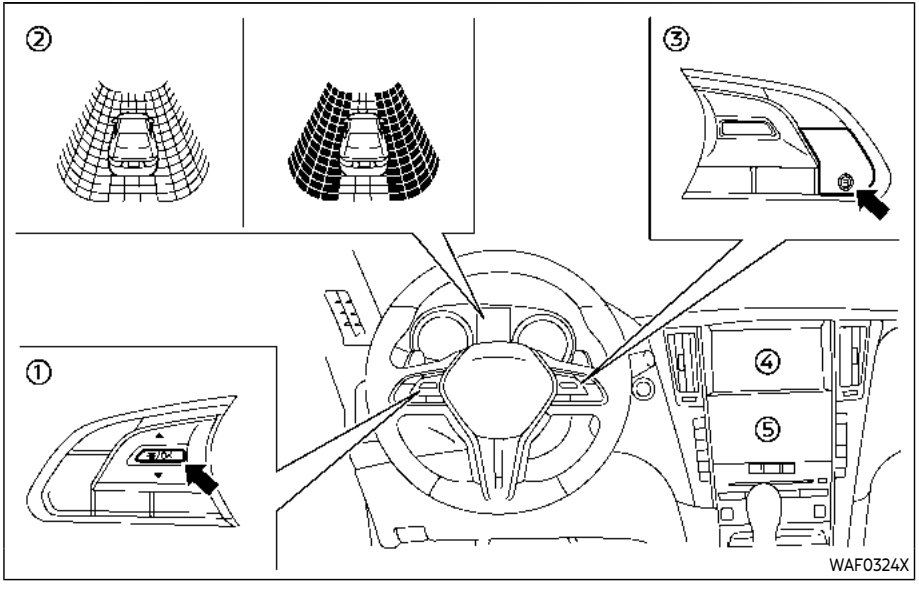

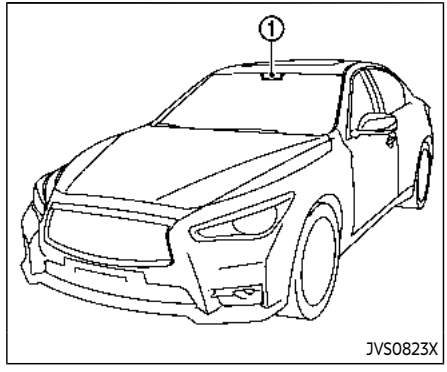

① **/OK** switch
② Vehicle information display
③ Dynamic driver assistance switch
④ Upper display
⑤ Lower display

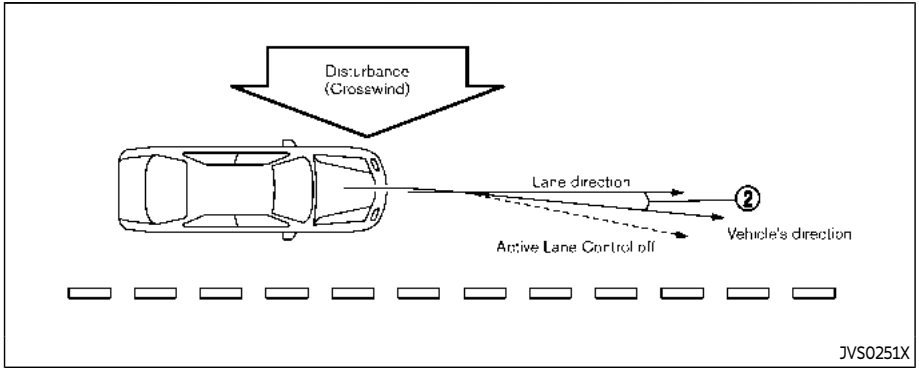

ACTIVE LANE CONTROL OPERATION

Active Lane Control slightly corrects front tire angles and steering wheel torque to help reduce the difference between the vehicle's direction and the lane direction ② which is detected by using the camera unit ① located above the inside mirror.

Active Lane Control operates under the following conditions:

- When the vehicle is driven at speeds of approximately 45 MPH (70 km/h) and above.
- When Active Lane Control is enabled in the settings menu on the display.

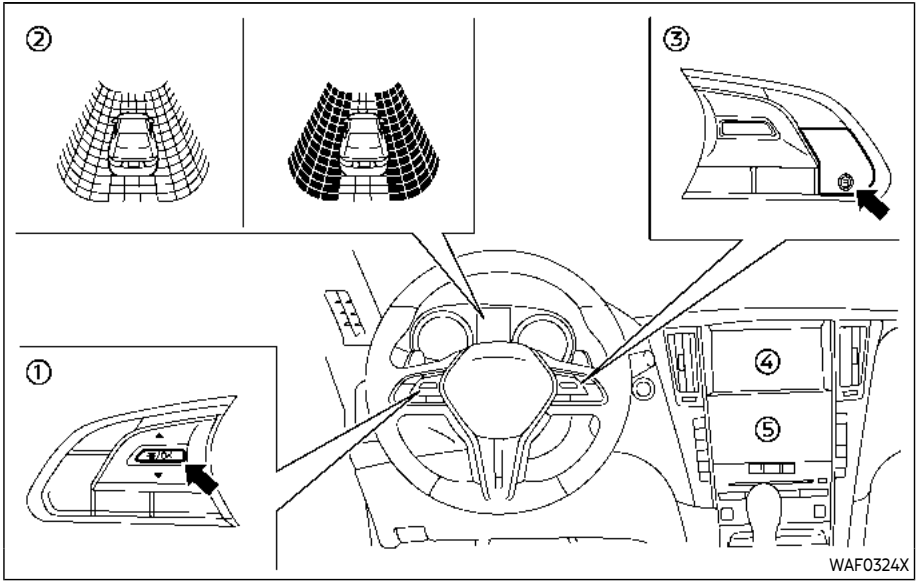

① **/OK** switch
② Vehicle information display
③ Dynamic driver assistance switch
④ Upper display
⑤ Lower display

TURNING ACTIVE LANE CONTROL ON/OFF

To turn on Active Lane Control, push the dynamic driver assistance switch on the steering wheel after starting the engine.

Push the dynamic driver assistance switch again to turn off Active Lane Control.

The dynamic driver assistance switch is used for Active Lane Control, the Blind Spot Intervention® (BSI) and Distance Control Assist (DCA) systems. When the dynamic driver assistance switch is pushed, the BSI and DCA systems will also turn on or off simultaneously. These systems can be individually set to on or off on the lower display.

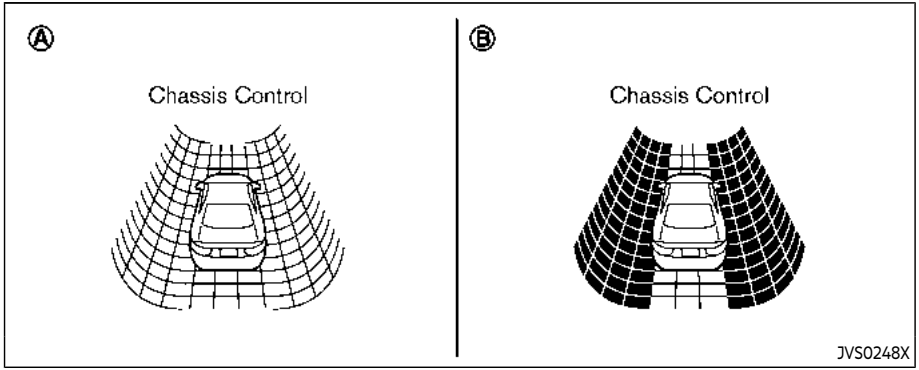

The status of Active Lane Control can be checked in the chassis control display in the vehicle information display ②.

- When Active Lane Control is turned on, the chassis control Ⓐ is displayed.
- When Active Lane Control is operational or is operating, the chassis control Ⓑ is displayed.

For setting of the chassis control display, see INFINITI InTouch™ Owner's Manual.

HOW TO ENABLE/DISABLE ACTIVE LANE CONTROL

Perform the following steps to enable or disable Active Lane Control. If Type A setting is not available, perform Type B setting.

Type A (if so equipped):

1. Push the ☰ **/OK** switch on the steering wheel.
2. Touch [TURN ALC ON] or [TURN ALC OFF] on the upper display to enable or disable Active Lane Control.

Type B (if so equipped):

1. Push the MENU button and touch [Driver Assistance] on the lower display.
2. Touch [Lane Assist].
3. Touch [Active Lane Control] to enable or disable Active Lane Control.

The displayed keys on the display may vary depending on models, specifications and software version.

Active Lane Control settings (Type B only)

Perform the following steps to set Active Lane Control.

1. Push the MENU button and touch [Driver Assistance] on the lower display.

2. Touch [Lane Assist].
3. Enable [Active Lane Control].
4. Touch [Active Lane Control Setting] and select [Low] or [High] to change the setting of Active Lane Control.

The displayed keys on the lower display may vary depending on models, specifications and software version.

ACTIVE LANE CONTROL LIMITATIONS

WARNING

Listed below are the limitations for Active Lane Control. Failure to operate the vehicle in accordance with these limitations could result in serious injury or death.

- **Active Lane Control is primarily intended for use on well-developed freeways or highways. It may not detect the lane markers for certain roads, weather or driving conditions.**
- **Using Active Lane Control under some conditions of road, lane marker or weather, or if you attempt to change lanes without using the lane change signal could lead to an unexpected system operation. In such conditions, you need to correct the vehicle's direction with your steering operation to avoid accidents.**
- **Active Lane Control will not operate at speeds below approximately 45 MPH (70 km/h) or if it cannot detect lane markers.**
- **Active Lane Control may not operate properly and should not be used under the following conditions:**
  - **During bad weather (rain, fog, snow, etc.).**
  - **When driving on slippery roads, such as on ice or snow, etc.**
  - **When driving on winding or uneven roads.**
  - **When there is a lane closure due to road repairs.**
  - **When driving in a makeshift lane.**
  - **When driving on roads where the lane width is too narrow.**
  - **When driving with a tire that is not within normal tire conditions (for example, tire wear, low tire pressure, installation of spare tire, tire chains, non-standard wheels).**
  - **When the vehicle is equipped with non-original steering parts or suspension parts.**
- **Active Lane Control may or may not operate properly under the following conditions:**
  - **On roads where there are multiple parallel lane markers; lane markers that are faded or not painted clearly; yellow painted lane markers; non-standard lane markers; or lane markers covered with water, dirt, snow, etc.**
  - **On roads where discontinued lane markers are still detectable.**
  - **On roads where there are sharp curves.**
  - **On roads where there are sharply contrasting objects, such as shadows, snow, water, wheel ruts, seams or lines remaining after road repairs. (Active Lane Control could detect these items as lane markers.)**
  - **On roads where the traveling lane merges or separates.**
  - **When the vehicle's traveling direction does not align with the lane marker.**
  - **When traveling close to the vehicle in front of you, which ob-**

structs the lane camera unit detection range.

- **When rain, snow, dirt or object adheres to the windshield in front of the lane camera unit.**
- **When the headlights are not bright due to dirt on the lens or if the aiming is not adjusted properly.**
- **When strong light enters the lane camera unit. (For example, the light directly shines on the front of the vehicle at sunrise or sunset.)**
- **When a sudden change in brightness occurs. (For example, when the vehicle enters or exits a tunnel or under a bridge.)**
- **When entering or exiting tollgates.**
- **When driving on roads with a widening or narrowing lane width.**

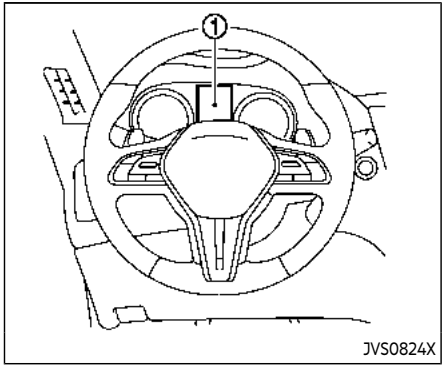

① Vehicle information display

SYSTEM TEMPORARILY UNAVAILABLE

Automatic deactivation

Active Lane Control is not designed to operate under the following conditions:

- When the Vehicle Dynamic Control (VDC) system (except TCS function) or ABS operates.
- When you operate the lane change signal and change the traveling lanes in the direction of the signal. (Active Lane Control is deactivated for approximately 2 seconds after the lane change signal is turned off.)
- When the vehicle speed lowers to less than approximately 45 MPH (70 km/h).
- When the hazard warning flashers are operated.

After the above conditions have finished and the operating conditions are satisfied again, Active Lane Control will resume operation.

Temporary disabled status at high temperature

If the vehicle is parked in direct sunlight under high temperature conditions (over approximately 104°F (40°C)) and then Active Lane Control is turned on, Active Lane Control may be deactivated automatically. The high cabin temperature message will appear in the vehicle information display ①.

Action to take:

When the interior temperature is reduced, push the dynamic driver assistance switch again to turn Active Lane Control back on.

SYSTEM MALFUNCTION

If Active Lane Control malfunctions, it will cancel automatically. The chassis control warning will appear in the vehicle information display.

Action to take:

If the chassis control warning appears, pull off the road to a safe location and stop the vehicle. Turn the engine off and restart the engine. If the chassis control warning continues to appear, have Active Lane Control checked. It is recommended you visit an INFINITI retailer for this service.

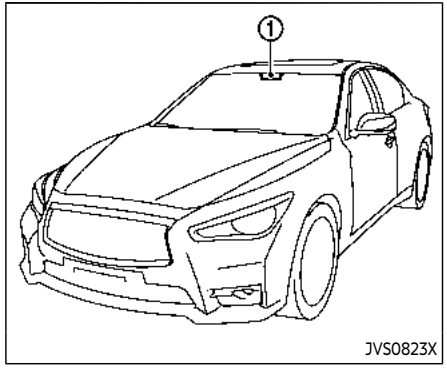

SYSTEM MAINTENANCE

The lane camera unit ① for Active Lane Control is located above the inside mirror. To keep the proper operation of Active Lane Control and prevent a system malfunction, be sure to observe the following:

- Always keep the windshield clean.
- Do not attach a sticker (including transparent material) or install an accessory near the camera unit.
- Do not place reflective materials, such as white paper or a mirror, on the instrument panel. The reflection of sunlight may adversely affect the camera unit's capability of detecting the lane markers.
- Do not strike or damage the areas around the camera unit. It is recommended you contact an INFINITI retailer if the camera unit is damaged due to an accident.

LANE DEPARTURE WARNING (LDW) SYSTEM (if so equipped)

WARNING

Failure to follow the warnings and instructions for proper use of the LDW system could result in serious personal injury or death.

- **The LDW system will not prevent loss of control. It is the driver's responsibility to stay alert, drive safely, keep the vehicle in the traveling lane, and be in control of the vehicle at all times.**

The LDW system warns the driver with an indicator in the vehicle information display and vibrations of the steering wheel that the vehicle is beginning to leave the driving lane.

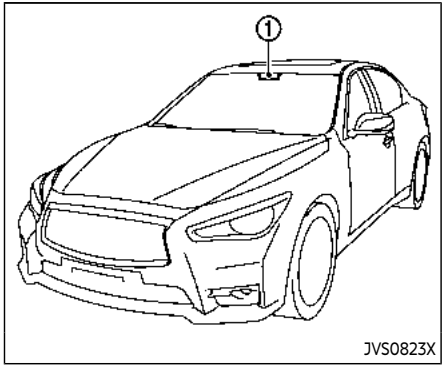

The LDW system uses a camera ① installed behind the windshield to monitor the lane markers of your traveling lane.

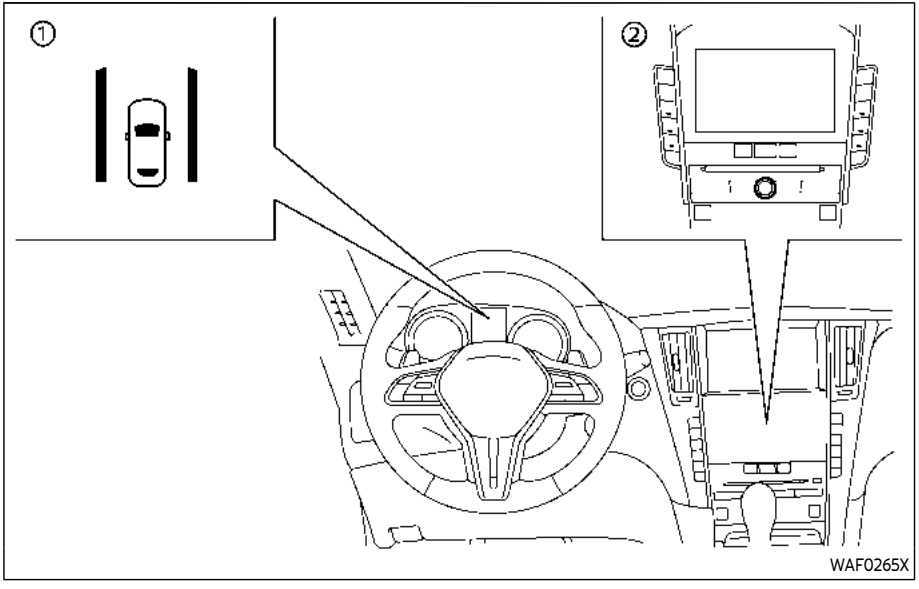

① Driver assist system lane indicator (green) (on the vehicle information display)

② Lower display

LDW SYSTEM OPERATION

The LDW system operates above approximately 45 MPH (70 km/h) and when the lane markings are clear.

If the vehicle approaches either the left or the right side of the traveling lane, the driver assist system lane indicator (orange) in the vehicle information display will blink and the steering wheel will vibrate.

NOTE:

The LDW system is not designed to warn when you operate the lane change signal and change traveling lanes in the direction of the signal. (The LDW system will become operable again approximately 2 seconds after the lane change signal is turned off.)

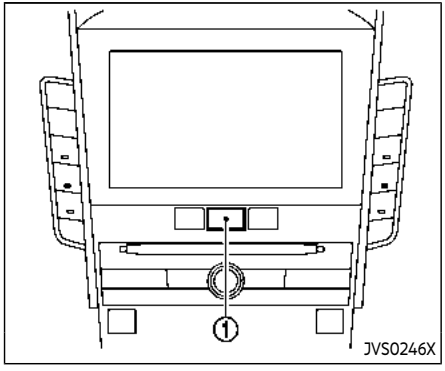

HOW TO ENABLE/DISABLE THE LDW SYSTEM

Perform the following steps to enable or disable the LDW system.

1. Push the MENU button ① and touch [Driver Assistance] on the lower display.
2. Touch [Lane Assist].
3. Touch [Lane Departure Warning] to enable or disable the system.

The displayed keys on the lower display may vary depending on models, specifications and software version.

LDW SYSTEM LIMITATIONS

WARNING

Listed below are the system limitations for the LDW system. Failure to operate the vehicle in accordance with these system limitations could result in serious injury or death.

- **The system will not operate at speeds below 45 MPH (70 km/h) or if it cannot detect lane markers.**
- **The camera may not detect lane markers in the following situations and the LDW system may not operate properly.**
  - **On roads where there are multiple parallel lane markers; lane markers that are faded or not painted clearly; yellow painted lane markers; non-standard lane markers; or lane markers covered with water, dirt, snow, etc.**
  - **On roads where discontinued lane markers are still detectable.**
  - **On roads where there are sharp curves.**
  - **On roads where there are sharply contrasting objects, such as shadows, snow, water, wheel ruts, seams or lines remaining after road repairs. (The LDW system could detect these items as lane markers.)**
  - **On roads where the traveling lane merges or separates.**
  - **When the vehicle's traveling direction does not align with the lane marker.**
  - **When traveling close to the vehicle in front of you, which obstructs the lane camera unit detection range.**
  - **When rain, snow or dirt adheres to the windshield in front of the lane camera unit.**
  - **When the headlights are not bright due to dirt on the lens or if the aiming is not adjusted properly.**
  - **When strong light enters the lane camera unit. (For example, the light directly shines on the front of the vehicle at sunrise or sunset.)**
  - **When a sudden change in brightness occurs. (For example, when the vehicle enters or exits a tunnel**

or under a bridge.)

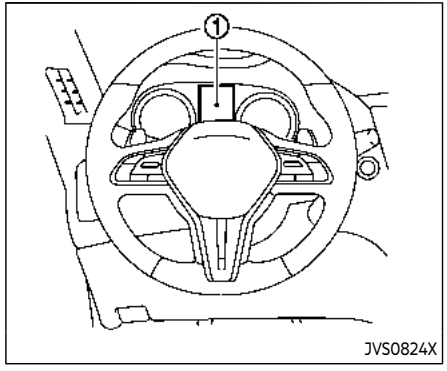

① Warnings and indicators (on the vehicle information display)

SYSTEM TEMPORARILY UNAVAILABLE

If the vehicle is parked in direct sunlight under high temperature conditions (over approximately 104°F (40°C)) and then started, the LDW system may be deactivated automatically. The "high cabin temperature" warning message will appear in the vehicle information display.

The LDW system is not available until the conditions no longer exist.

Action to take:

When the above conditions no longer exist, the LDW system will resume automatically.

SYSTEM MALFUNCTION

If the LDW system malfunctions, it will cancel automatically, and the LDW "malfunction" message will appear in the vehicle information display.

Action to take:

Stop the vehicle in a safe location, place the vehicle in the P (Park) position, turn the engine off and restart the engine. If the "malfunction" message continues to appear, have the system checked. It is recommended you visit an INFINITI retailer for this service.

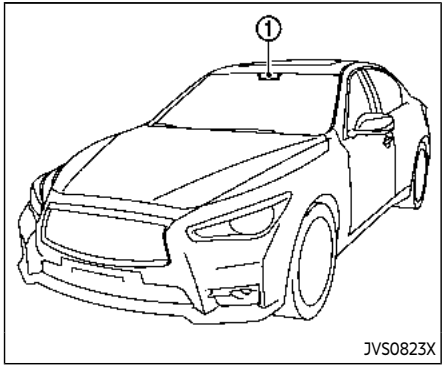

SYSTEM MAINTENANCE

The lane camera unit ① for LDW system is located above the inside mirror. To keep the proper operation of LDW system and prevent a system malfunction, be sure to observe the following:

- Always keep the windshield clean.
- Do not attach a sticker (including transparent material) or install an accessory near the camera unit.
- Do not place reflective materials, such as white paper or a mirror, on the instrument panel. The reflection of sunlight may adversely affect the camera unit's capability of detecting the lane markers.
- Do not strike or damage the areas around the camera unit. It is recommended you contact an INFINITI retailer if the camera unit is damaged due to an accident.

BLIND SPOT WARNING (BSW) (if so equipped)

WARNING

Failure to follow the warnings and instructions for proper use of the BSW system could result in serious injury or death.

- **The BSW system is not a replacement for proper driving procedure and is not designed to prevent contact with vehicles or objects. When changing lanes, always use the side and rear mirrors and turn and look in the direction your vehicle will move to ensure it is safe to change lanes. Never rely solely on the BSW system.**
- **There is a limitation to the detection capability of the radar. Not every moving object or vehicle will be detected. Using the BSW system under some road, ground, lane marker, traffic or weather conditions could lead to improper system operation. Always rely on your own operation to avoid accidents.**

The BSW system helps alert the driver of other vehicles in adjacent lanes when changing lanes.

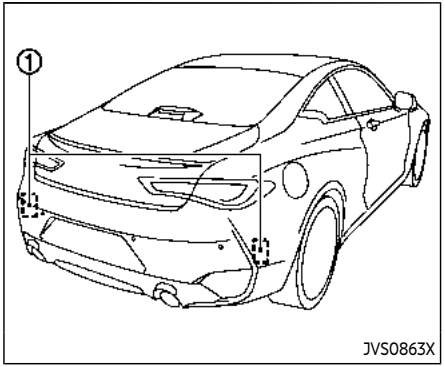

The BSW system uses radar sensors ① installed near the rear bumper to detect other vehicles in an adjacent lane.

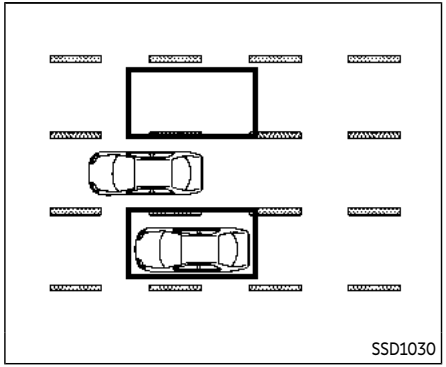

Detection zone

The radar sensors can detect vehicles on either side of your vehicle within the detection zone shown as illustrated. This detection zone starts from the outside mirror of your vehicle and extends approximately 10 ft (3.0 m) behind the rear bumper, and approximately 10 ft (3.0 m) sideways.

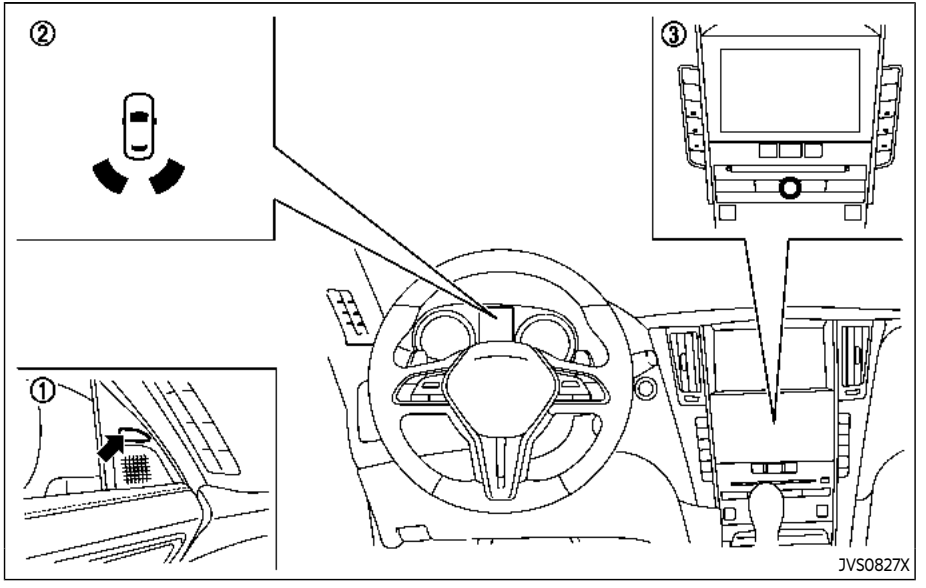

① Side indicator light
② Driver assist system blind spot indicator (on the vehicle information display)
③ Lower display

BSW SYSTEM OPERATION

The BSW system operates above approximately 20 MPH (32 km/h).

If the radar sensors detect a vehicle in the detection zone, the side indicator light ① illuminates.

If the turn signal is then activated, the system chimes (twice) and the side indicator light flashes. The side indicator light continues to flash until the detected vehicle leaves the detection zone.

NOTE:

- **The side indicator lights illuminate for a few seconds when the ignition switch is placed in the ON position.**
- **The brightness of the side indicator lights is adjusted automatically depending on the brightness of the ambient light.**
- **If a vehicle comes into the detection zone after the driver activates the turn signal, then only the side indicator light flashes and no chime sounds. (See "BSW driving situations" (P.5-41).)**

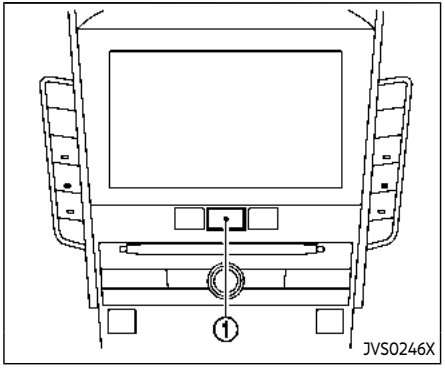

HOW TO ENABLE/DISABLE THE BSW SYSTEM

Perform the following steps to enable or disable the BSW system.

1. Push the MENU button ① and touch [Driver Assistance] on the lower display.
2. Touch [Blind Spot Assist].
3. Touch [Blind Spot Warning] to enable or disable the system.

The displayed keys on the lower display may vary depending on models, specifications and software version.

Setting the side indicator light brightness

The brightness of the side indicator lights can be changed using the following steps:

1. Push the MENU button ① and touch [Driver Assistance] on the lower display.
2. Touch [Blind Spot Assist].
3. Touch [Blind Spot Indicator] to select [Bright], [Standard] or [Dark].

When the brightness setting is changed, the side indicator lights illuminate for a few seconds.

The displayed keys on the lower display may vary depending on models, specifications and software version.

BSW SYSTEM LIMITATIONS

WARNING

Listed below are the system limitations for the BSW system. Failure to operate the vehicle in accordance with these system limitations could result in serious injury or death.

- **The BSW system cannot detect all vehicles under all conditions.**
- **The radar sensors may not be able to detect and activate BSW when certain objects are present such as:**
  - **Pedestrians, bicycles, animals.**
  - **Vehicles such as motorcycles, low height vehicles, or high ground clearance vehicles.**
  - **Oncoming vehicles.**
  - **Vehicles remaining in the detection zone when you accelerate from a stop.**
  - **A vehicle merging into an adjacent lane at a speed approximately the same as your vehicle.**
  - **A vehicle approaching rapidly from behind.**
  - **A vehicle which your vehicle overtakes rapidly.**
  - **A vehicle that passes through the detection zone quickly.**
- **The radar sensor's detection zone is designed based on a standard lane width. When driving in a wider lane, the radar sensors may not detect vehicles in an adjacent lane. When driving in a narrow lane, the radar sensors may detect vehicles driving two lanes away.**

- **The radar sensors are designed to ignore most stationary objects, however objects such as guardrails, walls, foliage and parked vehicles may occasionally be detected. This is a normal operation condition.**
- **The following conditions may reduce the ability of the radar to detect other vehicles:**
  - **Severe weather**
  - **Road spray**
  - **Ice/frost/snow build-up on the vehicle**
  - **Dirt build-up on the vehicle**
- **Do not attach stickers (including transparent material), install accessories or apply additional paint near the radar sensors. These conditions may reduce the ability of the radar to detect other vehicles.**
- **Excessive noise (for example, audio system volume, open vehicle window) will interfere with the chime sound, and it may not be heard.**

BSW DRIVING SITUATIONS

Indicator on

Indicator off

Indicator flashing

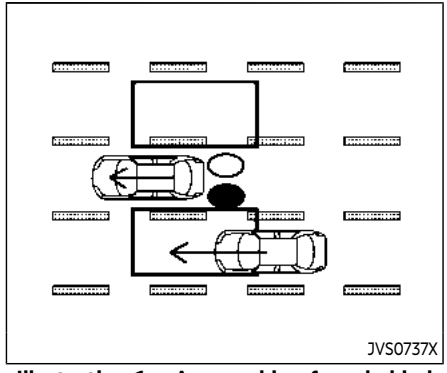

Illustration 1 – Approaching from behind

Another vehicle approaching from behind

Illustration 1: The side indicator light illuminates if a vehicle enters the detection zone from behind in an adjacent lane.

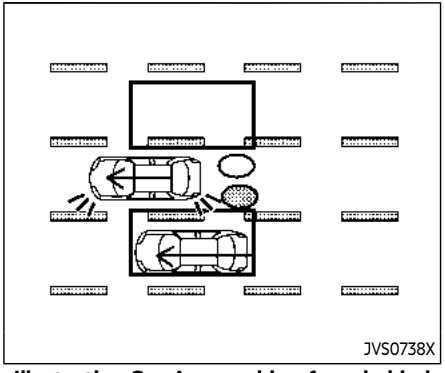

Illustration 2 – Approaching from behind

Illustration 2: If the driver activates the turn signal, then the system chimes (twice) and the side indicator light flashes.

NOTE:

- **The radar sensors may not detect vehicles which are approaching rapidly from behind.**
- **If the driver activates the turn signal before a vehicle enters the detection zone, the side indicator light will flash but no chime will sound when the other vehicle is detected.**

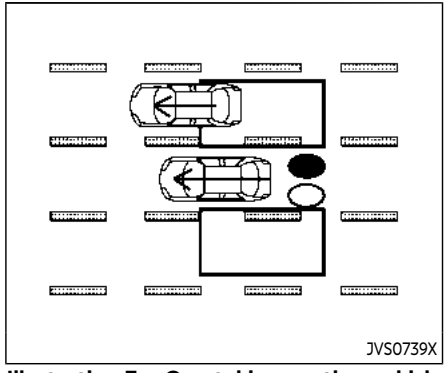

Illustration 3 – Overtaking another vehicle

Overtaking another vehicle

Illustration 3: The side indicator light illuminates if you overtake a vehicle and that vehicle stays in the detection zone for approximately 3 seconds.

The radar sensors may not detect slower moving vehicles if they are passed quickly.

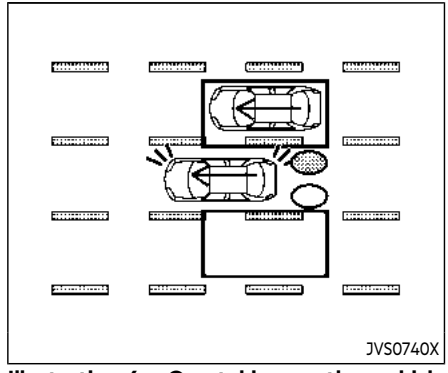

Illustration 4 – Overtaking another vehicle

Illustration 4: If the driver activates the turn signal while another vehicle is in the detection zone, then the system chimes (twice) and the side indicator light flashes.

NOTE:

- **When overtaking several vehicles in a row, the vehicles after the first vehicle may not be detected if they are traveling close together.**
- **The radar sensors may not detect slower moving vehicles if they are passed quickly.**
- **If the driver activates the turn signal before a vehicle enters the detection zone, the side indicator light will flash**

but no chime will sound when the other vehicle is detected.

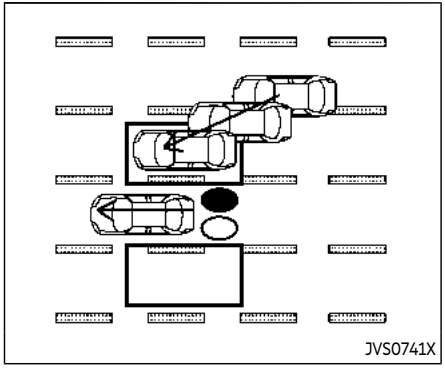

Illustration 5 – Entering from the side

Entering from the side

Illustration 5: The side indicator light illuminates if a vehicle enters the detection zone from either side.

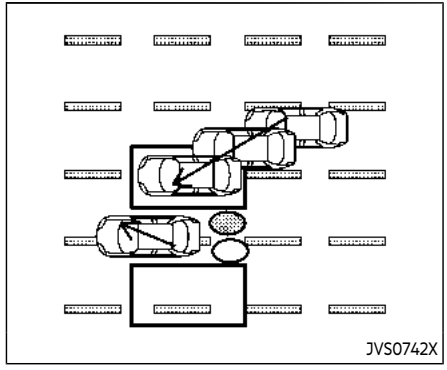

Illustration 6 – Entering from the side

Illustration 6: If the driver activates the turn signal, then the system chimes (twice) and the side indicator light flashes.

NOTE:

- **The radar sensors may not detect a vehicle which is traveling at about the same speed as your vehicle when it enters the detection zone.**
- **If the driver activates the turn signal before a vehicle enters the detection zone, the side indicator light will flash but no chime will sound when the other vehicle is detected.**

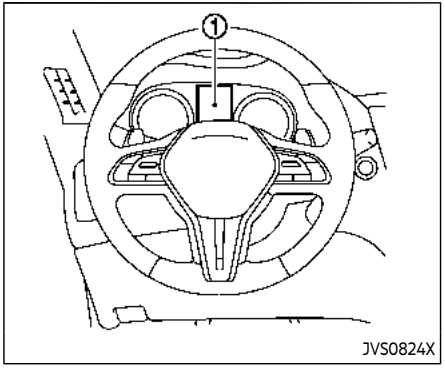

① Vehicle information display

SYSTEM TEMPORARILY UNAVAILABLE

When radar blockage is detected, the BSW system will be turned off automatically, a chime will sound and the "side radar obstruction" warning message will appear in the vehicle information display ①.

The system is not available until the conditions no longer exist.

The radar sensors may be blocked by temporary ambient conditions such as splashing water, mist or fog. The blocked condition may also be caused by objects such as ice, frost or dirt obstructing the radar sensors.

Action to take:

When the above conditions no longer exist, the system will resume automatically.

If the "side radar obstruction" warning message continues to appear, have the system checked. It is recommended you visit an INFINITI retailer for this service.

SYSTEM MALFUNCTION

When the BSW system malfunctions, it will be turned off automatically, a chime will sound, and the system "malfunction" warning message with the driver assist system blind spot indicator (orange) will appear in the vehicle information display.

Action to take:

Stop the vehicle in a safe location and place the shift lever in the P (Park) position. Turn the engine off and restart the engine. If the system "malfunction" warning message with the driver assist system blind spot indicator (orange) continues to be displayed, have the BSW system checked. It is recommended you visit an INFINITI retailer for this service.

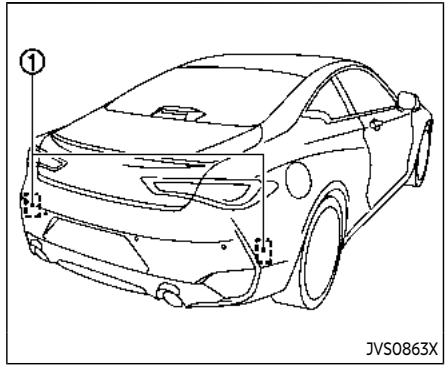

SYSTEM MAINTENANCE

The two radar sensors ① for the BSW system are located near the rear bumper. Always keep the area near the radar sensors clean.

The radar sensors may be blocked by temporary ambient conditions such as splashing water, mist or fog.

The blocked condition may also be caused by objects such as ice, frost or dirt obstructing the radar sensors.

Check for and remove objects obstructing the area around the radar sensors.

Do not attach stickers (including transparent material), install accessories or apply addi-

tional paint near the radar sensors.

Do not strike or damage the area around the radar sensors.

It is recommended you visit an INFINITI retailer if the area around the radar sensors is damaged due to a collision.

Radio frequency statement

For USA

FCC ID: OAYSRR3B

This device complies with part 15 of the FCC Rules. Operation is subject to the following two conditions:

(1) this device may not cause harmful interference, and

(2) this device must accept any interference received, including interference that may cause undesired operation.

CAUTION TO USERS

Changes or modifications not expressly approved by the party responsible for compliance could void the user's authority to operate the equipment.

For Canada

Model: SRR3–B

Canada 310

This device complies with Industry Canada's RSS-310. Operation is subject to the condition that this device must not cause harmful interference and must accept any interference, including interference that may cause undesired operation of the device.

BLIND SPOT INTERVENTION® (BSI) (if so equipped)

WARNING

Failure to follow the warnings and instructions for proper use of the BSI system could result in serious injury or death.

- **The BSI system is not a replacement for proper driving procedures and is not designed to prevent contact with vehicles or objects. When changing lanes, always use the side and rear mirrors and turn and look in the direction your vehicle will move to ensure it is safe to change lanes. Never rely solely on the BSI system.**
- **There is a limitation to the detection capability of the radar. Not every moving object or vehicle will be detected. Using the BSI system under some road, ground, lane marker, traffic or weather conditions could lead to improper system operation. Always rely on your own operation to avoid accidents.**

The BSI system helps alert the driver of other vehicles in adjacent lanes when changing lanes, and helps assist the driver to return the vehicle to the center of the traveling lane.

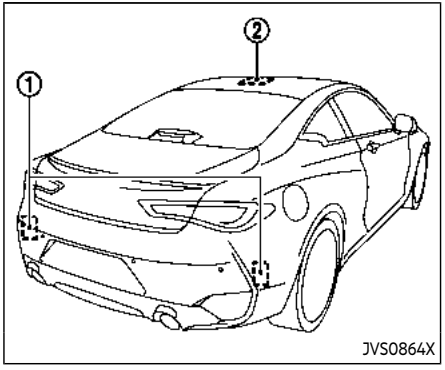

The BSI system uses radar sensors ① installed near the rear bumper to detect other vehicles in an adjacent lane. In addition to the radar sensors, the BSI system uses a camera ② installed behind the windshield to monitor the lane markers of your traveling lane.

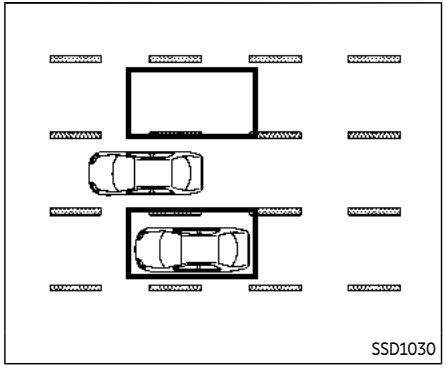

Detection zone

The radar sensors can detect vehicles on either side of your vehicle within the detection zone shown as illustrated.

This detection zone starts from the outside mirror of your vehicle and extends approximately 10 ft (3.0 m) behind the rear bumper, and approximately 10 ft (3.0 m) sideways.

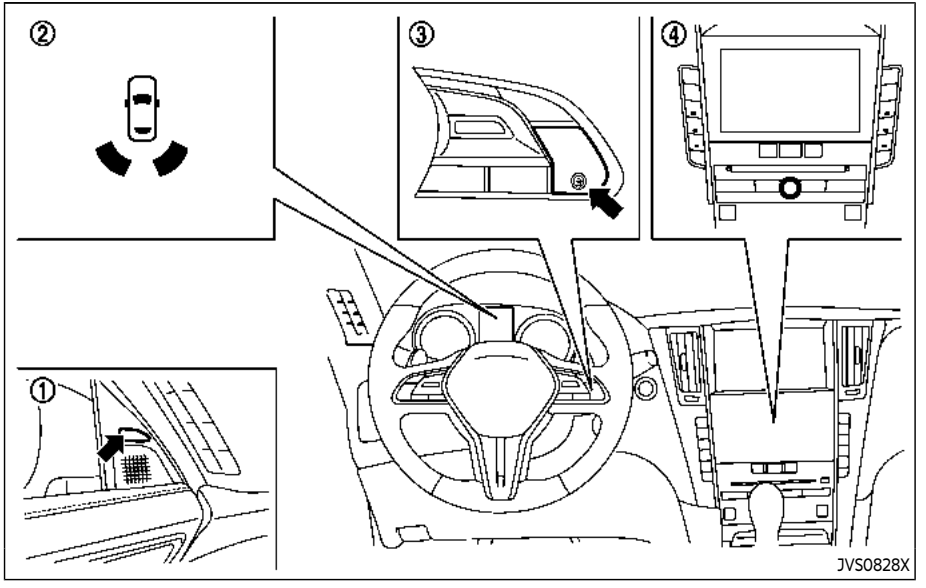

① Side indicator light
② Driver assist system blind spot indicator (on the vehicle information display)
③ Dynamic driver assistance switch
④ Lower display

BSI SYSTEM OPERATION

The BSI system operates above approximately 37 MPH (60 km/h).

If the radar sensors detect a vehicle in the detection zone, the side indicator light ① illuminates.

If the turn signal is then activated, the system chimes (twice) and the side indicator light flashes. The side indicator light continues to flash until the detected vehicle leaves the detection zone.

If the BSI system is ON and your vehicle approaches a lane marker while another vehicle is in the detection zone, the system chimes (three times) and the side indicator light flashes. The BSI system activates to help return the vehicle back to the center of the driving lane. The BSI system operates regardless of turn signal usage.

NOTE:

BSI warning and system application will only be activated if the side indicator light is already illuminated when your vehicle approaches a lane marker. If another vehicle comes into the detection zone after your vehicle has crossed a lane marker, no BSI warning or system application will be activated. (For additional information, see "BSI driving situations" (P.5-51).)

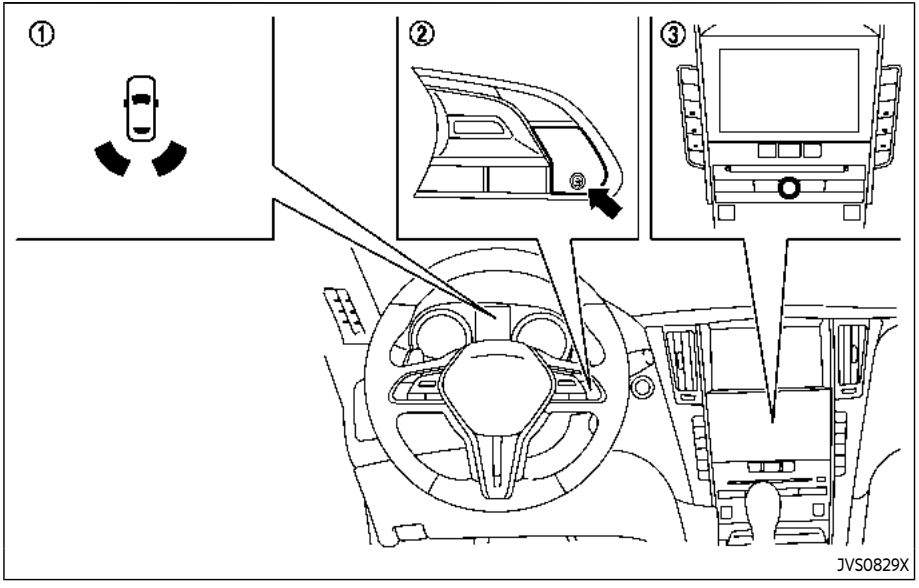

① Driver assist system blind spot indicator (green) (on the vehicle information display)
② Dynamic driver assistance switch
③ Lower display

TURNING THE BSI SYSTEM ON/OFF

To turn on the BSI system, push the dynamic driver assistance switch ② on the steering wheel after starting the engine. The driver assist system blind spot indicator (green) ① in the vehicle information display will illuminate.

Push the dynamic driver assistance switch ② again to turn off the BSI system. The driver assist system blind spot indicator ① will turn off.

The dynamic driver assistance switch ② is used for Active Lane Control (if so equipped), BSI and Distance Control Assist (DCA) systems. When the dynamic driver assistance switch ② is pushed, Active Lane Control and DCA systems will also turn on or off simultaneously. The BSI system can be individually set to on or off on the lower display ③.

If the system is set to off, the system will not turn on even if the dynamic driver assistance switch ② is pushed to on. To set the system to on or off on the lower display, see "How to enable/disable the BSI system" (P.5-49).

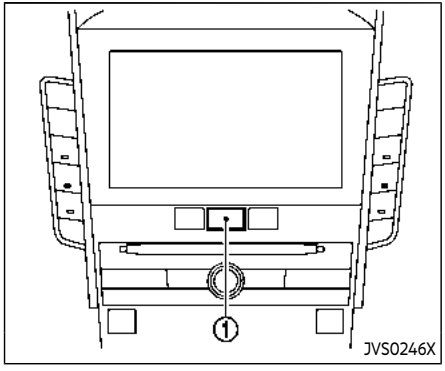

HOW TO ENABLE/DISABLE THE BSI SYSTEM

Perform the following steps to enable or disable the BSI system.

1. Push the MENU button ① and touch [Driver Assistance] on the lower display.
2. Touch [Blind Spot Assist].
3. Touch [Blind Spot Intervention] to enable or disable the system.

The displayed keys on the lower display may vary depending on models, specifications and software version.

Setting the side indicator light brightness

The brightness of the side indicator lights can be changed using the following steps:

1. Push the MENU button ① and touch [Driver Assistance] on the lower display.
2. Touch [Blind Spot Assist].
3. Touch [Blind Spot Indicator] to select [Bright], [Standard] or [Dark].

When the brightness setting is changed, the side indicator lights illuminate for a few seconds.

The displayed keys on the lower display may vary depending on models, specifications and software version.

BSI SYSTEM LIMITATIONS

WARNING

Listed below are the system limitations for the BSI system. Failure to operate the vehicle in accordance with these system limitations could result in serious injury or death.

- **The BSI system cannot detect all vehicles under all conditions.**
- **The radar sensors may not be able to detect and activate BSI when certain objects are present such as:**
  - **Pedestrians, bicycles, animals.**
  - **Vehicles such as motorcycles, low height vehicles, or high ground clearance vehicles.**
  - **Vehicles remaining in the detection zone when you accelerate from a stop.**
  - **Oncoming vehicles.**
  - **A vehicle merging into an adjacent lane at a speed approximately the same as your vehicle.**
  - **A vehicle approaching rapidly from behind.**
  - **A vehicle which your vehicle overtakes rapidly.**
  - **A vehicle that passes through the detection zone quickly.**
- **The radar sensor's detection zone is designed based on a standard lane width. When driving in a wider lane, the radar sensors may not detect vehicles in an adjacent lane. When driving in a narrow lane, the radar sensors may detect vehicles driving two lanes away.**

- The radar sensors are designed to ignore most stationary objects, however objects such as guardrails, walls, foliage and parked vehicles may occasionally be detected. This is a normal operation condition.
- The camera may not detect lane markers in the following situations and the BSI system may not operate properly.
  - On roads where there are multiple parallel lane markers; lane markers that are faded or not painted clearly; yellow painted lane markers; nonstandard lane markers; lane markers covered with water, dirt, snow, etc.
  - On roads where discontinued lane markers are still detectable.
  - On roads where there are sharp curves.
  - On roads where there are sharply contrasting objects, such as shadows, snow, water, wheel ruts, seams or lines remaining after road repairs.
  - On roads where the traveling lane merges or separates.
  - When the vehicle's traveling direction does not align with the lane markers.
  - When traveling close to the vehicle in front of you, which obstructs the lane camera unit detection range.
  - When rain, snow or dirt adheres to the windshield in front of a lane camera unit.
  - When the headlights are not bright due to dirt on the lens or if aiming is not adjusted properly.
  - When strong light enters a lane camera unit. (For example: light directly shines on the front of the vehicle at sunrise or sunset.)
  - When a sudden change in brightness occurs. (For example: when the vehicle enters or exits a tunnel or under a bridge.)
- Do not use the BSI system under the following conditions because the system may not function properly.
  - During bad weather. (For example: rain, fog, snow, etc.)
  - When driving on slippery roads, such as on ice or snow, etc.
  - When driving on winding or uneven roads.
  - When there is a lane closure due to road repairs.
  - When driving in a makeshift or temporary lane.
  - When driving on roads where the lane width is too narrow.
  - When driving with a tire that is not within normal tire conditions (for example, tire wear, low tire pressure, installation of spare tire, tire chains, non-standard wheels).
  - When the vehicle is equipped with non-original steering parts or suspension parts.
- Excessive noise (for example, audio system volume, open vehicle window) will interfere with the chime sound, and it may not be heard.

BSI DRIVING SITUATIONS

Indicator on

Indicator off

Indicator flashing

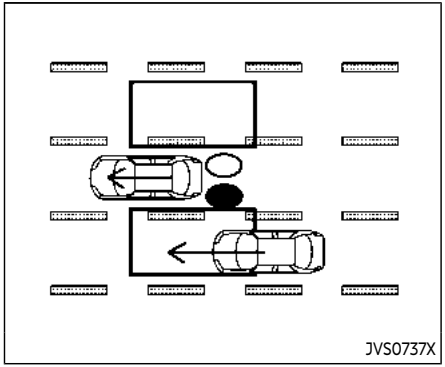

Illustration 1 – Approaching from behind

Another vehicle approaching from behind

Illustration 1: The side indicator light illuminates if a vehicle enters the detection zone from behind in an adjacent lane.

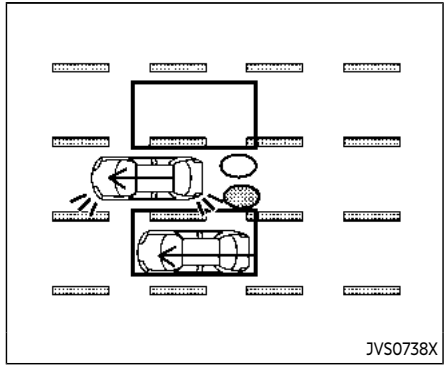

Illustration 2 – Approaching from behind

Illustration 2: If the driver activates the turn signal then the system chimes a sound (twice) and the side indicator light flashes.

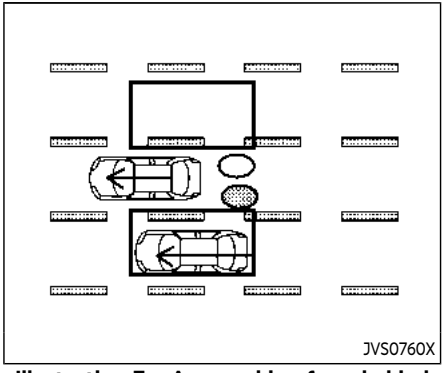

Illustration 3 - Approaching from behind

Illustration 3: If the BSI system is on and your vehicle approaches a lane marker while another vehicle is in the detection zone, the system chimes (three times) and the side indicator light flashes. The BSI system activates to help return the vehicle back to the center of the driving lane.

NOTE:

- **The radar sensors may not detect vehicles which are approaching rapidly from behind.**
- **If the driver activates the turn signal before a vehicle enters the detection zone, the side indicator light will flash but no chime will sound when the other vehicle is detected.**

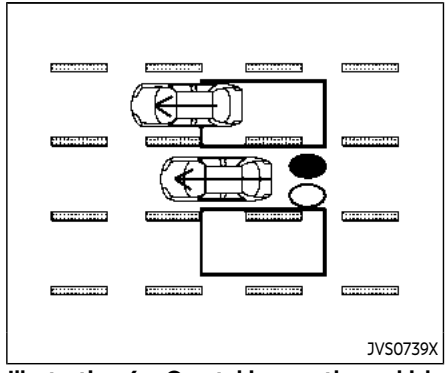

Illustration 4 - Overtaking another vehicle

Overtaking another vehicle

Illustration 4: The side indicator light illuminates if you overtake a vehicle and that vehicle stays in the detection zone for approximately 3 seconds.

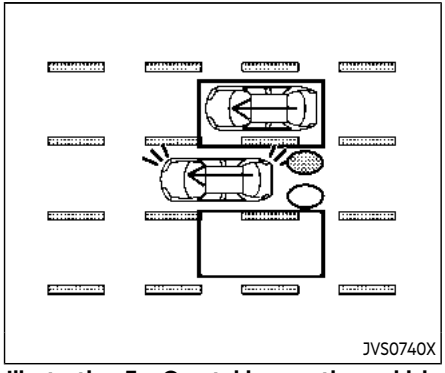

Illustration 5 - Overtaking another vehicle

Illustration 5: If the driver activates the turn signal while another vehicle is in the detection zone, then the system chimes (twice) and the side indicator light flashes.

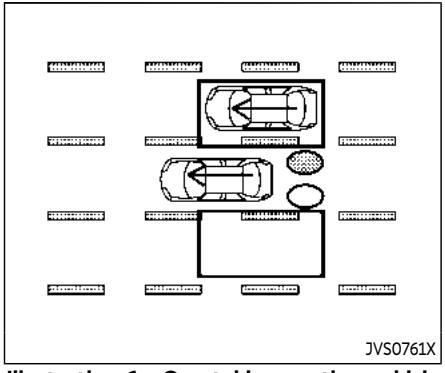

Illustration 6 - Overtaking another vehicle

Illustration 6: If the BSI system is on and your vehicle approaches a lane marker while another vehicle is in the detection zone, the system chimes (three times) and the side indicator light flashes. The BSI system activates to help return the vehicle back to the center of the driving lane.

NOTE:

- **When overtaking several vehicles in a row, the vehicles after the first vehicle may not be detected if they are traveling close together.**
- **The radar sensors may not detect slower moving vehicles if they are passed quickly.**
- **If the driver activates the turn signal before a vehicle enters the detection zone, the side indicator light will flash but no chime will sound when the other vehicle is detected.**

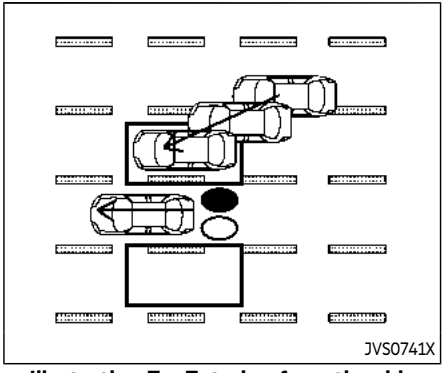

Illustration 7 - Entering from the side

Entering from the side

Illustration 7: The side indicator light illuminates if a vehicle enters the detection zone from either side.

NOTE:

The radar sensors may not detect a vehicle which is traveling at about the same speed as your vehicle when it enters the detection zone.

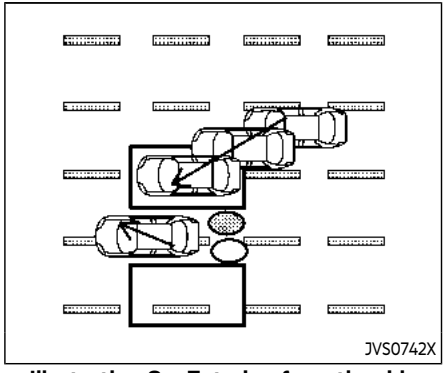

Illustration 8 - Entering from the side

Illustration 8: If the driver activates the turn signal while another vehicle is in the detection zone, then the side indicator light flashes and a chime will sound twice.

NOTE:

If the driver activates the turn signal before a vehicle enters the detection zone, the side indicator light will flash but no chime will sound when another vehicle is detected.

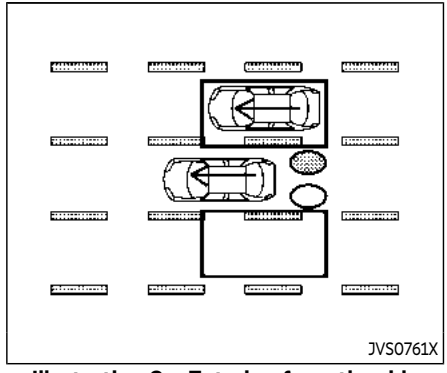

Illustration 9 - Entering from the side

Illustration 9: If the BSI system is on and your vehicle approaches the lane marker while another vehicle is in the detection zone, the system chimes (three times) and the side indicator light flashes. The BSI system activates to help return the vehicle back to the center of the driving lane.

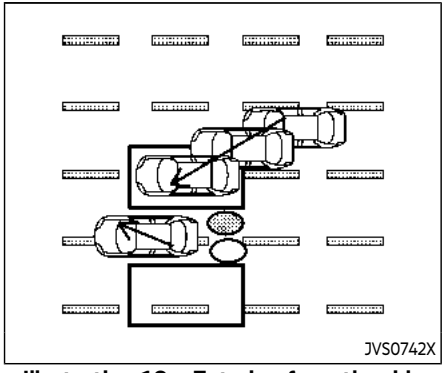

Illustration 10 - Entering from the side

Illustration 10: The BSI system will not operate if your vehicle is on a lane marker when another vehicle enters the detection zone. In this case only the BSW system operates.

NOTE:

- **The radar sensors may not detect a vehicle which is traveling at about the same speed as your vehicle when it enters the detection zone.**
- **If the driver activates the turn signal before a vehicle enters the detection zone, the side indicator light will flash but no chime will sound when the other vehicle is detected.**
- **BSI will not operate or will stop operating and only a warning chime will sound under the following conditions.**
  - **When the vehicle is accelerated during BSI system operation**
  - **When steering quickly**
  - **When the ICC, DCA, PFCW or FEB warnings sound.**
  - **When the hazard warning flashers are operated.**
  - **When driving on a curve at a high speed.**

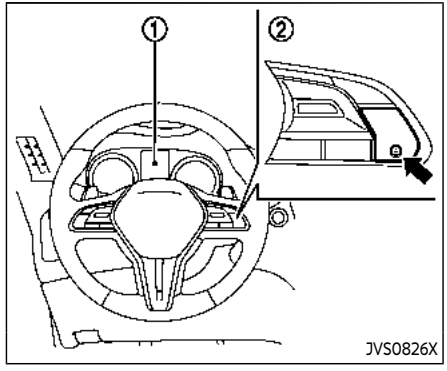

① Vehicle information display

② Dynamic driver assistance switch

SYSTEM TEMPORARILY UNAVAILABLE

Under the following conditions, a chime will sound, the "currently unavailable" warning message will appear in the vehicle information display ① and the BSI system will be turned off automatically. The BSI system will not be available until the conditions no longer exist.

- When the VDC system (except TCS function) or ABS operates.
- When the VDC system is turned off.

- When the INFINITI Drive Mode Selector is turned to the SNOW mode.

Action to take:

When the above conditions no longer exist, push the dynamic driver assistance switch ② again to turn the BSI system back on.

When radar blockage is detected, the BSI system will be turned off automatically, a chime will sound and the "side radar obstruction" warning message will appear in the vehicle information display ①.

The BSI system is not available until the conditions no longer exist. For additional information, see "System maintenance" (P.5-56).

Action to take:

When the above conditions no longer exist, turn the BSI system on again. If the "side radar obstruction" warning message appears even after the BSI system is turned on again, stop the vehicle in a safe location, place the shift lever in the P (Park) position and turn the engine off. Check for and remove objects obscuring the radar sensors on the rear bumper, and restart the engine.

If the vehicle is parked in direct sunlight under high temperature conditions (over approximately 104°F (40°C)) and then the BSI system is turned on, the BSI system may be deactivated automatically. The "high cabin temperature" warning message will appear in the vehicle information display ①.

Action to take:

When the interior temperature is reduced, push the dynamic driver assistance switch ② again to turn the BSI system back on.

SYSTEM MALFUNCTION

When the BSI system malfunctions, it will be turned off automatically, a chime will sound, and the system "malfunction" warning message with the driver assist system blind spot indicator (orange) will appear in the vehicle information display.

Action to take:

Stop the vehicle in a safe location and place the shift lever in the P (Park) position. Turn the engine off and restart the engine. If the system "malfunction" warning message with the driver assist system blind spot indicator (orange) continues to be displayed, have the BSI system checked. It is recommended you visit an INFINITI retailer for this service.

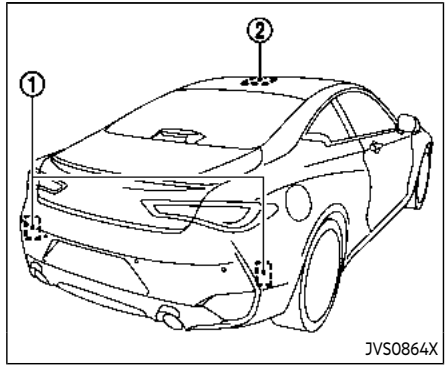

SYSTEM MAINTENANCE

The two radar sensors ① for the BSI system are located near the rear bumper. Always keep the area near the radar sensors clean.

The radar sensors may be blocked by temporary ambient conditions such as splashing water, mist or fog.

The blocked condition may also be caused by objects such as ice, frost or dirt obstructing the radar sensors.

Check for and remove objects obstructing the area around the radar sensors.

Do not attach stickers (including transparent material), install accessories or apply additional paint near the radar sensors.

Do not strike or damage the area around the radar sensors.

It is recommended you visit an INFINITI retailer if the area around the radar sensors is damaged due to a collision.

The lane camera unit ② for BSI system is located above the inside mirror. To keep the proper operation of BSI and prevent a system malfunction, be sure to observe the following:

- Always keep the windshield clean.
- Do not attach a sticker (including transparent material) or install an accessory near the camera unit.
- Do not place reflective materials, such as white paper or a mirror, on the instrument panel. The reflection of sunlight may adversely affect the camera unit's capability of detecting the lane markers.
- Do not strike or damage the areas around the camera unit. It is recommended you contact an INFINITI retailer if the camera unit is damaged due to an accident.

Radio frequency statement

For USA

FCC ID: OAYSRR3B

This device complies with part 15 of the FCC Rules. Operation is subject to the following two conditions:

(1) this device may not cause harmful interference, and

(2) this device must accept any interference received, including interference that may cause undesired operation.

CAUTION TO USERS

Changes or modifications not expressly approved by the party responsible for compliance could void the user's authority to operate the equipment.

For Canada

Model: SRR3–B

Canada 310

This device complies with Industry Canada's RSS-310. Operation is subject to the condition that this device must not cause harmful interference and must accept any interference, including interference that may cause undesired operation of the device.

BACK-UP COLLISION INTERVENTION (BCI) (if so equipped)

WARNING

Failure to follow the warnings and instructions for proper use of the BCI system could result in serious injury or death.

- **The BCI system is not a replacement for proper driving procedure, is not designed to prevent contact with vehicles or objects and does not provide full brake power. When backing out of parking spaces, always use the inside and rear mirrors and turn and look in the direction you will move. Never rely solely on the BCI system.**
- **There is a limitation to the detection capability of the radar or the sonar. Using the BCI system under some road, ground, traffic or weather conditions could lead to improper system operation. Always rely on your own operation to avoid accidents.**

The BCI system can help alert the driver of an approaching vehicle or objects behind the vehicle when the driver is backing out of a parking space.

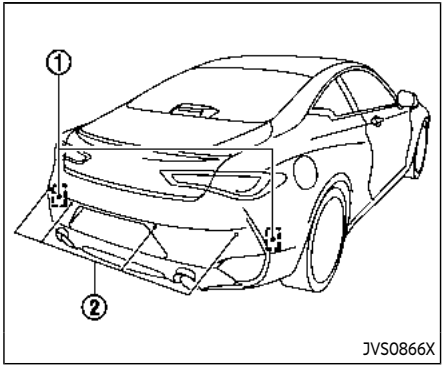

The BCI system uses radar sensors ① installed on both sides near the rear bumper to detect an approaching vehicle and sonar sensors ② to detect objects in the rear.

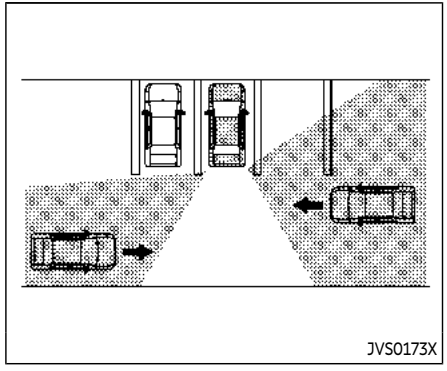

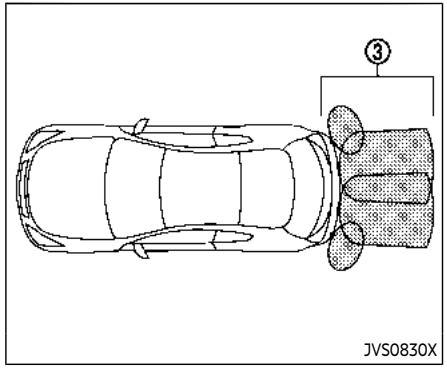

The radar sensors ① detect an approaching vehicle from up to approximately 49 ft (15 m) away. The sonar sensors ② detect stationary objects behind the vehicle up to approximately 4.9 ft (1.5 m). Refer to the illustration for approximate zone coverage areas ③.

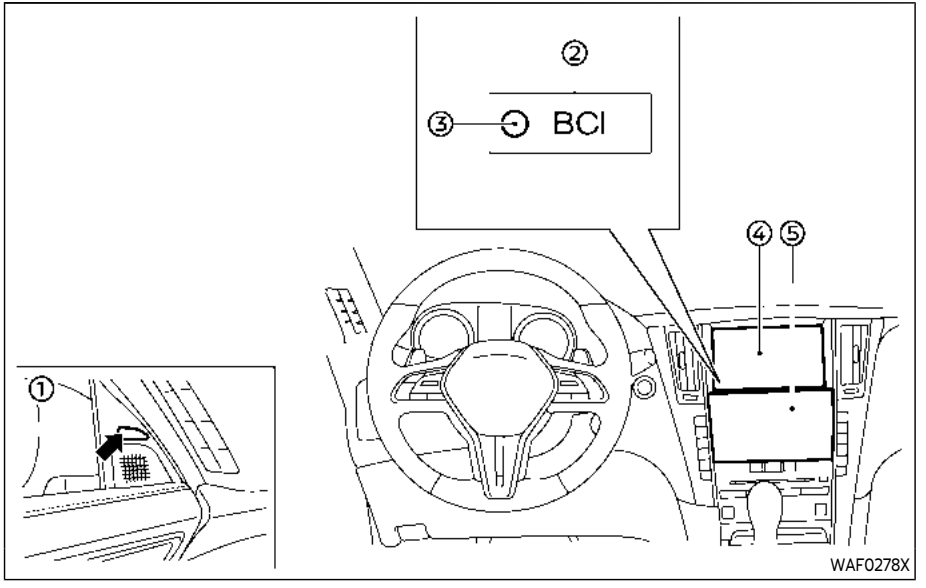

① Side indicator light
② BCI system key
③ BCI system indicator
④ Upper display
⑤ Lower display

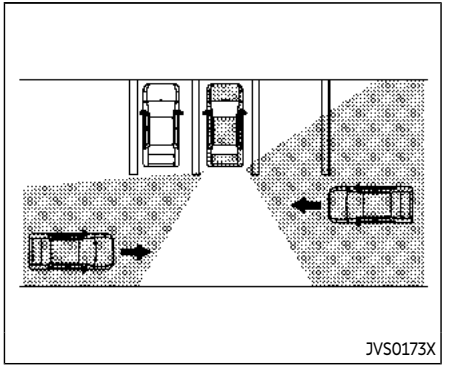

BCI SYSTEM OPERATION

When the shift lever is in the R (Reverse) position and the vehicle speed is less than approximately 5 MPH (8 km/h), the BCI system operates.

If the radar detects a vehicle approaching from the side or the sonar detects close stationary objects behind the vehicle, the system gives visual and audible warnings. If the driver does not apply the brakes, the system automatically applies the brake for a moment when the vehicle is moving backwards. After the automatic brake application, the driver must depress the brake pedal to maintain brake pressure. If the driver's foot is on the accelerator pedal, the system

pushes the accelerator upward before applying the brake. If you continue to accelerate, the system will not engage the brake.

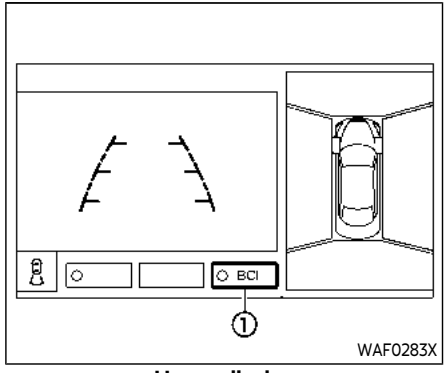

Upper display

When the shift lever is placed in the R (Reverse) position, the indicator on the BCI system key ① illuminates on the upper display.

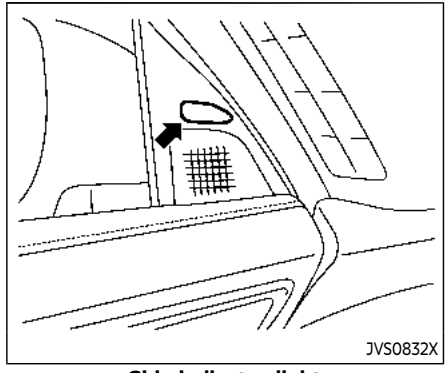

Side indicator light

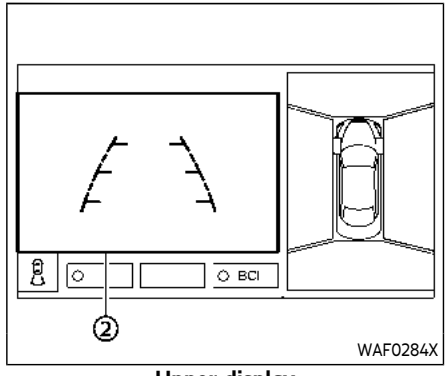

Upper display

If the radar detects an approaching vehicle from the side, the system chimes (once), the side indicator light on the side the vehicle is approaching from flashes and a yellow rectangular frame ② appears on the upper display.

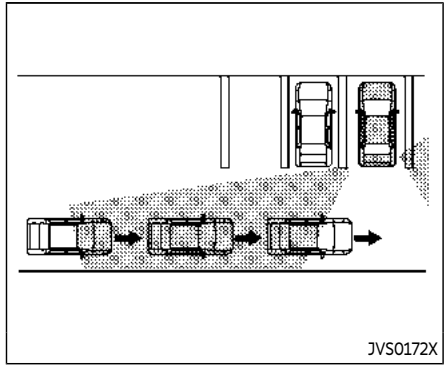

Illustration 1

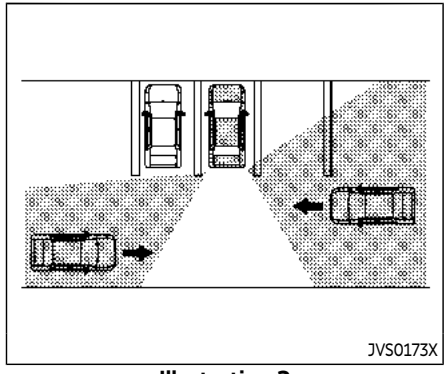

Illustration 2

NOTE:

- **In the case of several vehicles approaching in a row (Illustration 1) or in the opposite direction (Illustration 2), a chime may not be sounded by the BCI system after the first vehicle passes the sensors.**
- **The sonar system chime indicating there is an object behind the vehicle has a higher priority than the BCI chime (single beep) indicating an approaching vehicle. If the sonar system detects an object behind the vehicle and the BCI system detects an approaching vehicle at the same time, the following indications are provided:**
  - **The sonar system chime sounds**
  - **The side indicator light on the side of the approaching vehicle flashes, and**
  - **A yellow rectangular frame appears in the display.**

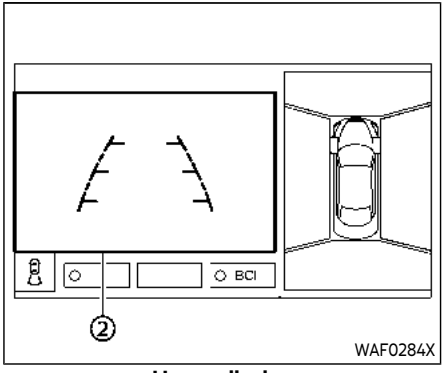

Upper display

If an approaching vehicle or object behind the vehicle is detected when your vehicle is backing up, a red frame ② will appear on the upper display and the system will chime three times. Then, the brakes will be applied momentarily. After the automatic brake application, the driver must depress the brake pedal to maintain brake pressure.

If the driver's foot is on the accelerator pedal, the system moves the accelerator pedal upward before the braking is applied. However, if you continue to accelerate, the system will not engage the brakes.

The BCI system does not operate if the object is very close to the bumper.

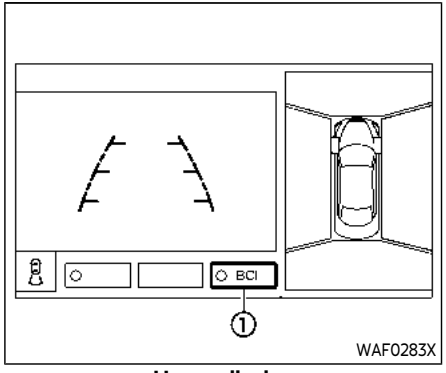

Upper display

TURNING THE BCI SYSTEM ON/OFF

The BCI system automatically turns on every time the engine is started.

The BCI system can be turned off temporarily by touching the BCI system key ① on the upper display. The indicator on the BCI system key turns off. When the shift lever is placed in the R (Reverse) position again, the BCI system is turned on.

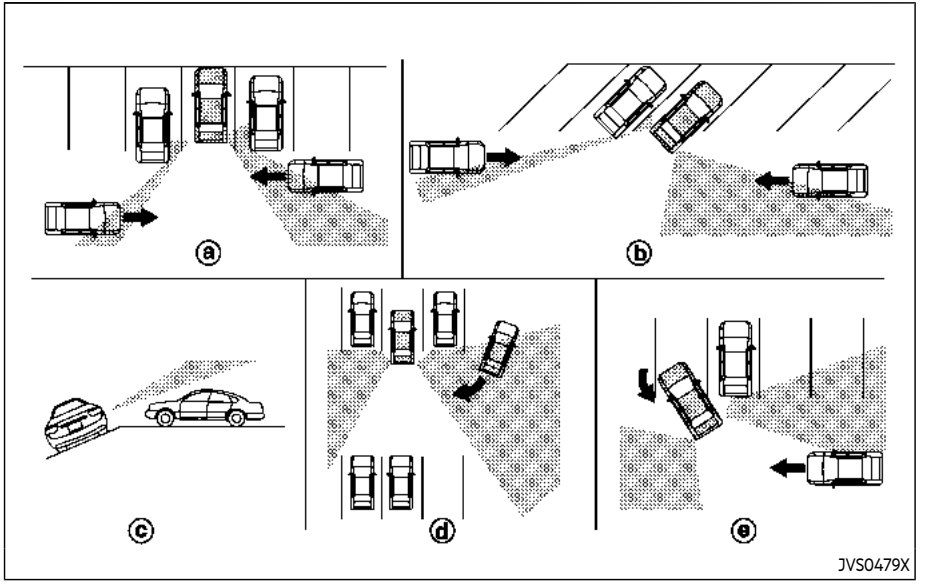

BCI SYSTEM LIMITATIONS

WARNING

Listed below are the system limitations for the BCI system. Failure to operate the vehicle in accordance with these system limitations could result in serious injury or death.

- **Always check your surroundings and turn to check what is behind you before backing up.**
- **The radar sensors detect approaching (moving) vehicles. The radar sensors cannot detect every object such as:**
  - **Pedestrians, bicycles, animals or child operated toy vehicles**
  - **A vehicle that is passing at speeds greater than approximately 15 MPH (24 km/h)**
- **The radar sensors may not detect approaching vehicles in certain situations:**
  - **Illustration a. When a vehicle parked next to you obstructs the beam of the radar sensor.**
  - **Illustration b. When the vehicle is parked in an angled parking space.**
  - **Illustration c. When the vehicle is parked on inclined ground.**
  - **Illustration d. When an approaching vehicle turns into your vehicle's parking lot aisle.**
  - **Illustration e. When the angle formed by your vehicle and approaching vehicle is small.**
- **The following conditions may reduce the ability of the radar sensors to detect other vehicles:**

- **Severe weather**
- **Road spray**
- **Ice/frost/dirt build up on the vehicle**

- **Do not attach stickers (including transparent material), install accessories or apply additional paint near the radar sensors. These conditions may reduce the ability of the radar sensors to detect other vehicles.**
- **The sonar sensors detect stationary objects behind the vehicle. The sonar sensor may not detect:**
  - **Small or moving objects**
  - **Wedge-shaped objects**
  - **Object close to the bumper (less than approximately 1 ft (30 cm))**
  - **Thin objects such as rope, wire and chain, etc.**
- **The brake engagement by the BCI system is not as effective on a slope as it is on flat ground. When on a steep slope the system may not function properly.**
- **Do not use the BCI system under the following conditions because the system may not function properly.**
  - **When driving with a tire that is not within normal tire conditions (for example, tire wear, low tire pressure, installation of spare tire, tire chains, non-standard wheels).**
  - **When the vehicle is equipped with non-original brake parts or suspension parts.**
- **Excessive noise (for example, audio system volume, open vehicle window) will interfere with the chime sound, and it may not be heard.**

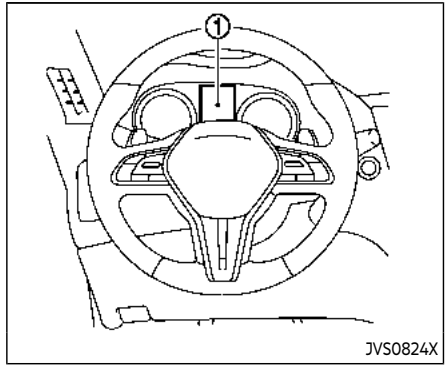

① Vehicle information display

SYSTEM TEMPORARILY UNAVAILABLE

If the following message appears in the vehicle information display ①, a chime will sound and the BCI system will be turned off automatically.

- "Unavailable High Accelerator Temp.":
  If the vehicle is parked in direct sunlight under high temperature conditions (over approximately 104 °F (40 °C)) and then started, the BCI system may be deactivated automatically.
  Action to take:
  When the interior temperature is re-

duced, turn off the BCI system and turn it on again.

- "Unavailable Side Radar Obstruction":
  When side radar blockage is detected.
  Action to take:
  When the blockage is removed, turn off the BCI system and turn it on again.

SYSTEM MALFUNCTION

If the BCI system malfunctions, it will turn off automatically, a chime will sound and BCI system "malfunction" warning message will appear in the vehicle information display ①.

Action to take:

Stop the vehicle in a safe location and place the shift lever in the P (Park) position. Turn the engine off and restart the engine. If the warning message continues to appear, have the system checked. It is recommended you visit an INFINITI retailer for this service.

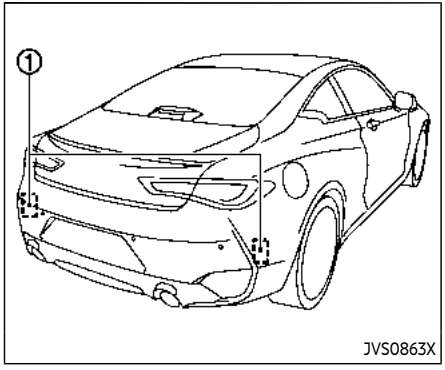

SYSTEM MAINTENANCE

The two radar sensors ① for the BCI system is located near the rear bumper. Always keep the area near the radar sensors clean.

The radar sensors may be blocked by temporary ambient conditions such as splashing water, mist or fog.

The blocked condition may also be caused by objects such as ice, frost or dirt obstructing the radar sensors.

Check for and remove objects obstructing the area around the radar sensors.

Do not attach stickers (including transparent material), install accessories or apply additional paint near the radar sensors.

Do not strike or damage the area around the radar sensors.

It is recommended you visit an INFINITI retailer if the area around the radar sensors is damaged due to a collision.

Radio frequency statement

For USA

FCC ID: OAYSRR3B

This device complies with part 15 of the FCC Rules. Operation is subject to the following two conditions:

(1) this device may not cause harmful interference, and

(2) this device must accept any interference received, including interference that may cause undesired operation.

CAUTION TO USERS

Changes or modifications not expressly approved by the party responsible for compliance could void the user's authority to operate the equipment.

For Canada

Model: SRR3–B

Canada 310

This device complies with Industry Canada's RSS-310. Operation is subject to the condition that this device must not cause harmful interference and must accept any

interference, including interference that may cause undesired operation of the device.

PRECAUTIONS ON CRUISE CONTROL

- If the cruise control system malfunctions, it will cancel automatically. The cruise indicator (green) in the vehicle information display will then blink to warn the driver.
- If the engine coolant temperature becomes excessively high, the cruise control system will be canceled automatically.
- If the cruise indicator (green) blinks, turn the cruise control MAIN switch off and have the system checked. It is recommended you visit an INFINITI retailer for this service.
- The cruise indicator (green) may sometimes blink when the cruise control MAIN switch is turned ON while pushing the SET/COAST (-), RESUME/ACCELERATE (+) or CANCEL switch. To properly set the cruise control system, perform the steps below in the order indicated.

WARNING

Do not use the cruise control when driving under the following conditions:

- **when it is not possible to keep the vehicle at a set speed**
- **in heavy traffic or in traffic that varies in speed**
- **on winding or hilly roads**
- **on slippery roads (rain, snow, ice, etc.)**
- **in very windy areas**

Doing so could cause a loss of vehicle control and result in an accident.

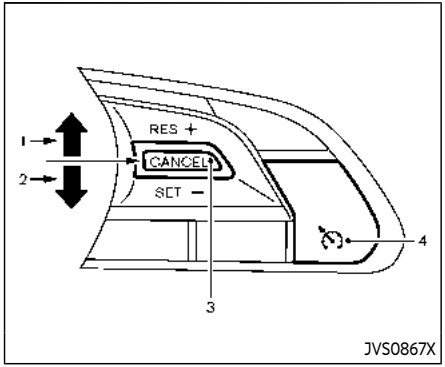

1. RESUME/ACCELERATE (+) switch
2. SET/COAST (-) switch
3. CANCEL switch
4. MAIN (ON·OFF) switch

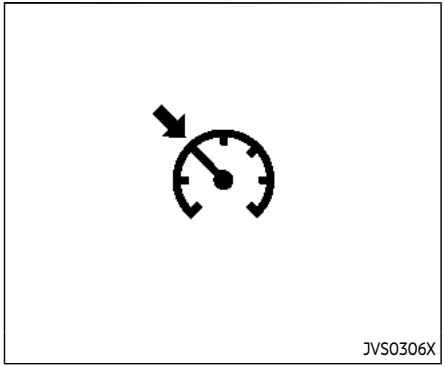

Cruise indicator

CRUISE CONTROL OPERATIONS

The cruise indicator and the set vehicle speed are displayed in the vehicle information display. The cruise indicator indicates the status of the cruise control system by the color.

The cruise control allows driving at a speed between 25 to 90 MPH (40 to 144 km/h) without keeping your foot on the accelerator pedal.

To turn on the cruise control, push the MAIN switch on. The cruise indicator (white) will come on.

To set cruising speed, accelerate your vehicle to the desired speed, push the SET/COAST (-) switch and release it. (The cruise indicator (green) will illuminate.) Take your foot off the accelerator pedal. Your vehicle will maintain the set speed.

- **To pass another vehicle,** depress the accelerator pedal. When you release the pedal, the vehicle will return to the previously set speed.
- The vehicle may not maintain the set speed on winding or hilly roads. If this happens, drive without the cruise control.

To cancel the preset speed, follow any of these methods:

1. Push the CANCEL switch.
2. Tap the brake pedal.
3. Turn the MAIN switch off.

After any of the above operations is performed, the color of the cruise indicator will change from green to white.

- If you depress the brake pedal while pushing the RESUME/ACCELERATE (+) or SET/COAST (-) switch and reset at the cruising speed, the cruise control will disengage. Turn the MAIN switch off once and then turn it on again.
- The cruise control will automatically cancel if the vehicle slows more than 8 MPH (13 km/h) below the set speed.

- If you move the shift lever to N (Neutral) position, the cruise control will be canceled.

To reset at a faster cruising speed, use one of the following methods:

- Depress the accelerator pedal. When the vehicle attains the desired speed, push and release the SET/COAST (-) switch.
- Push and hold the RESUME/ACCELERATE (+) switch. When the vehicle attains the speed you desire, release the switch.
- Push, then quickly release the RESUME/ACCELERATE (+) switch. Each time you do this, the set speed will increase by about 1 MPH (1.6 km/h).

To reset at a slower cruising speed, use one of the following methods:

- Lightly tap the brake pedal. When the vehicle attains the desired speed, push the SET/COAST (-) switch and release it.
- Push and hold the SET/COAST (-) switch. Release the switch when the vehicle slows down to the desired speed.
- Push, then quickly release the SET/COAST (-) switch. Each time you do this, the set speed will decrease by about 1 MPH (1.6 km/h).

To resume the preset speed, push and release the RESUME/ACCELERATE (+) switch. The vehicle will resume the last set cruising speed when the vehicle speed is over 25 MPH (40 km/h).

INTELLIGENT CRUISE CONTROL (ICC) (if so equipped)

WARNING

Failure to follow the warnings and instructions for proper use of the ICC system could result in serious injury or death.

- **ICC is not a collision avoidance or warning device. For highway use only and it is not intended for congested areas or city driving. Failure to apply the brakes could result in an accident.**
- **Always observe posted speed limits and do not set the speed over them.**
- **Always drive carefully and attentively when using either cruise control mode. Read and understand the Owner's Manual thoroughly before using the cruise control. To avoid serious injury or death, do not rely on the system to prevent accidents or to control the vehicle's speed in emergency situations. Do not use cruise control except in appropriate road and traffic conditions.**
- **In the conventional (fixed speed) cruise control mode, a warning chime will not sound to warn you if you are too close to the vehicle ahead. Pay special attention to the distance between your vehicle and the vehicle**

ahead of you or a collision could occur.

The ICC system maintains a selected distance from the vehicle in front of you within the speed range of 0 to 90 MPH (0 to 144 km/h) up to the set speed. The set speed can be selected by the driver between 20 to 90 MPH (32 to 144 km/h).

The vehicle travels at a set speed when the road ahead is clear.

The ICC system can be set to one of two cruise control modes.

- Vehicle-to-vehicle distance control mode:
  For maintaining a selected distance between your vehicle and the vehicle in front of you up to the preset speed.
- Conventional (fixed speed) cruise control mode:
  For cruising at a preset speed.

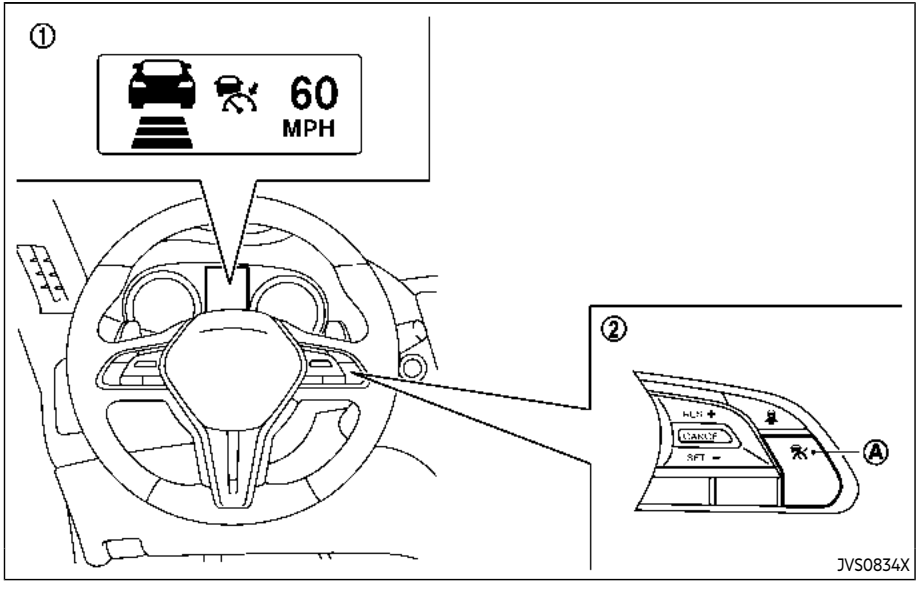

① Displays and indicators
② ICC switches
Ⓐ MAIN (ON·OFF) switch

Push the MAIN switch Ⓐ to choose the cruise control mode between the vehicle-to-vehicle distance control mode and the conventional (fixed speed) cruise control mode.

Once a control mode is activated, it cannot be changed to the other cruise control mode. To change the mode, push the MAIN switch Ⓐ once to turn the system off. Then push the MAIN switch Ⓐ again to turn the system back on and select the desired cruise control mode.

Always confirm the setting in the ICC system display.

For the vehicle-to-vehicle distance control mode, see "Vehicle-to-vehicle distance control mode" (P.5-71).

For the conventional (fixed speed) cruise control mode, see "Conventional (fixed speed) cruise control mode" (P.5-85).

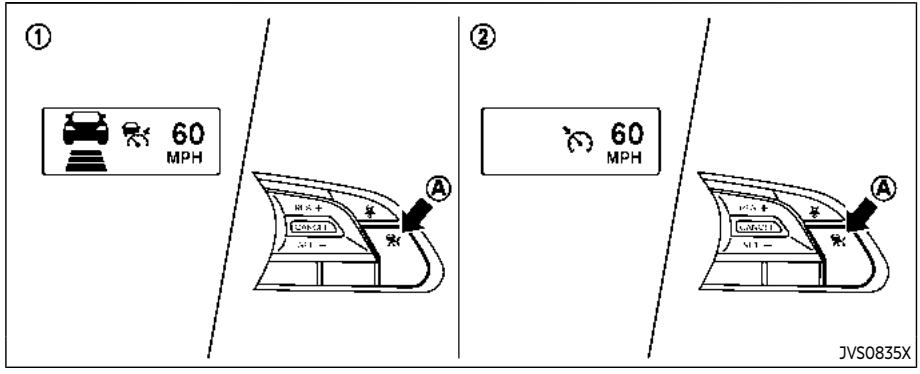

HOW TO SELECT THE CRUISE CONTROL MODE

Selecting the vehicle-to-vehicle distance control mode

To choose the vehicle-to-vehicle distance control mode ①, quickly push and release the MAIN switch Ⓐ.

Selecting the conventional (fixed speed) cruise control mode

To choose the conventional (fixed speed) cruise control mode ②, push and hold the MAIN switch Ⓐ for longer than approximately 1.5 seconds. See "Conventional (fixed speed) cruise control mode" (P.5-85).

VEHICLE-TO-VEHICLE DISTANCE CONTROL MODE

In the vehicle-to-vehicle distance control mode, the ICC system automatically maintains a selected distance from the vehicle traveling in front of you according to that vehicle's speed (up to the set speed), or at the set speed when the road ahead is clear.

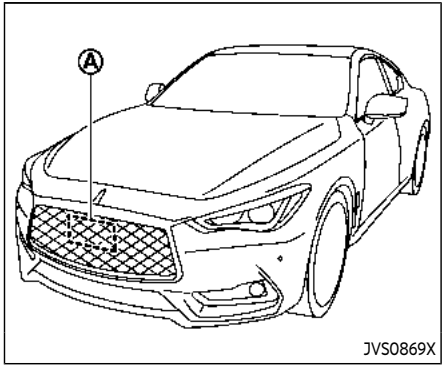

The system is intended to enhance the operation of the vehicle when following a vehicle traveling in the same lane and direction.

If the radar sensor Ⓐ detects a slower moving vehicle ahead, the system will reduce the vehicle speed so that your vehicle follows the vehicle in front at the selected distance.

The system automatically controls the throttle and applies the brakes (up to approximately 40% of vehicle braking power) if necessary.

The detection range of the sensor is approximately 650 ft (200 m) ahead.

Vehicle-to-vehicle distance control mode operation

The vehicle-to-vehicle distance control mode is designed to maintain a selected distance and reduce the speed to match the slower vehicle ahead; the system will decelerate the vehicle as necessary and if the vehicle ahead comes to a stop, the vehicle decelerates to a standstill. However, the ICC system can only apply up to approximately 40% of the vehicle's total braking power. This system should only be used when traffic conditions allow vehicle speeds to remain fairly constant or when vehicle speeds change gradually. If a vehicle moves into the traveling lane ahead or if a vehicle traveling ahead rapidly decelerates, the distance between vehicles may become closer because the ICC system cannot decelerate the vehicle quickly enough. If this occurs, the ICC system will sound a warning chime and blink the system display to notify the driver to take necessary action.

The system will cancel and a warning chime will sound if the speed is below approximately 15 MPH (24 km/h) and a vehicle is not detected ahead. The system will also disengage when the vehicle goes above the maximum set speed.

See “Approach warning” (P.5-78).

The following items are controlled in the vehicle-to-vehicle distance control mode:

- When there are no vehicles traveling ahead, the vehicle-to-vehicle distance control mode maintains the speed set by the driver. The set speed range is between approximately 20 and 90 MPH (32 and 144 km/h).
- When there is a vehicle traveling ahead, the vehicle-to-vehicle distance control mode adjusts the speed to maintain the distance, selected by driver, from the vehicle ahead. The adjusting speed range is up to the set speed. If the vehicle ahead comes to a stop, the vehicle decelerates to a standstill within the limitations of the system. The system will cancel once it judges a standstill with a warning chime.
- When the vehicle traveling ahead has moved out from its lane of travel, the vehicle-to-vehicle distance control mode accelerates and maintains vehicle speed up to the set speed.

The ICC system does not control vehicle speed or warn you when you approach stationary and slow moving vehicles. You must pay attention to vehicle operation to maintain proper distance from vehicles ahead when approaching toll gates or traffic congestion.

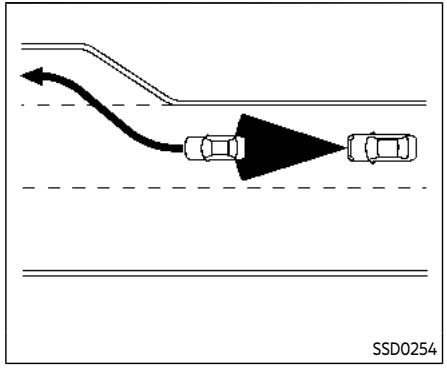

When driving on the freeway at a set speed and approaching a slower traveling vehicle ahead, the ICC system will adjust the speed to maintain the distance, selected by the driver, from the vehicle ahead. If the vehicle ahead changes lanes or exits the freeway, the ICC system will accelerate and maintain the speed up to the set speed. Pay attention to the driving operation to maintain control of the vehicle as it accelerates to the set speed.

The vehicle may not maintain the set speed on winding or hilly roads. If this occurs, you will have to manually control the vehicle speed.

Normally when controlling the distance to a vehicle ahead, this system automatically accelerates or decelerates your vehicle according to the speed of the vehicle ahead. Depress the accelerator to properly accelerate your vehicle when acceleration is required for a lane change. Depress the brake pedal when deceleration is required to maintain a safe distance to the vehicle ahead due to its sudden braking or if a vehicle cuts in. Always stay alert when using the ICC system.

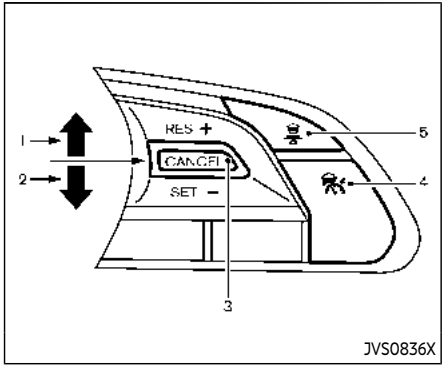

Vehicle-to-vehicle distance control mode switches

The system is operated by a MAIN switch and four control switches, all mounted on the steering wheel.

1. RESUME/ACCELERATE (+) switch:

   Resumes set speed or increases speed incrementally.
2. SET/COAST (-) switch:

   Sets desired cruise speed, reduces speed incrementally.
3. CANCEL switch:

   Deactivates the system without erasing the set speed.
4. MAIN switch:

   Master switch to activate the system
5. DISTANCE switch:

   Changes the vehicle's following distance:
   - Long
   - Middle
   - Short

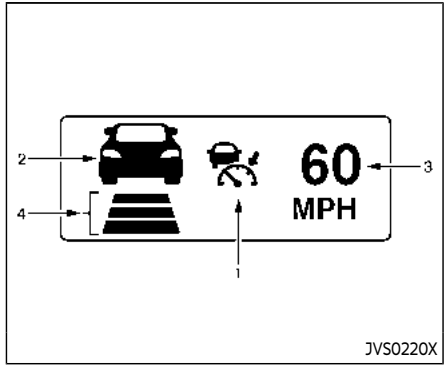

Vehicle-to-vehicle distance control mode display and indicators

The display is located between the speedometer and tachometer.

1. This indicator indicates the ICC system status depending on a color.
   - Intelligent Cruise Control system ON indicator (white):

     Indicates that the MAIN switch is ON.
   - Intelligent Cruise Control system set indicator (green):

     Indicates that cruising speed is set

- Intelligent Cruise Control system warning (orange):

  Indicates that there is a malfunction in the ICC system.

2. Vehicle ahead detection indicator:

   Indicates whether it detects a vehicle in front of you.

3. Set vehicle speed indicator:

   Indicates the set vehicle speed.

   For Canadian models, the speed is displayed in km/h.

4. Set distance indicator:

   Displays the selected distance between vehicles set with the DISTANCE switch.

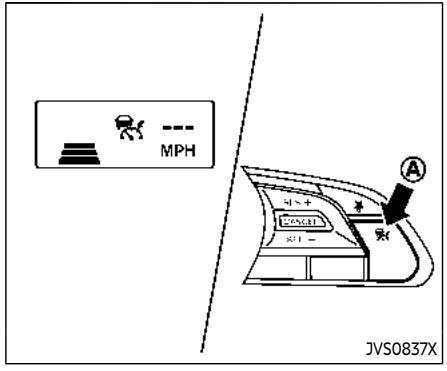

Operating vehicle-to-vehicle distance control mode

To turn on the cruise control, quickly push and release the MAIN switch Ⓐ on. The Intelligent Cruise Control (ICC) system ON indicator (white), set distance indicator and set vehicle speed indicator come on and in a standby state for setting.

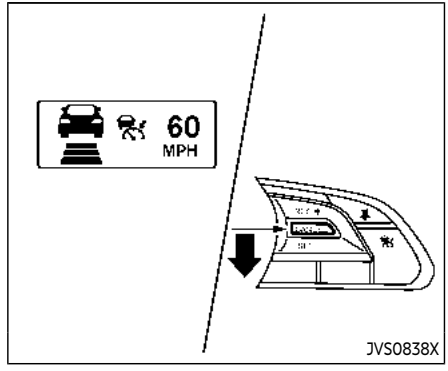

To set cruising speed, accelerate your vehicle to the desired speed, push the SET/COAST (-) switch and release it. (The ICC system set indicator (green), vehicle ahead detection indicator, set distance indicator and set vehicle speed indicator come on.) Take your foot off the accelerator pedal. Your vehicle will maintain the set speed.

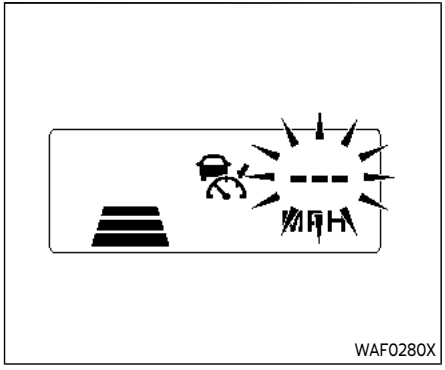

When the SET/COAST (-) switch is pushed under the following conditions, the system cannot be set and the ICC indicators will blink for approximately 2 seconds:

- When traveling below 20 MPH (32 km/h) and the vehicle ahead is not detected
- When the shift lever is not in the D (Drive) or manual shift mode
- When the parking brake is applied
- When the brakes are operated by the driver

When the SET/COAST (-) switch is pushed under the following conditions, the system cannot be set.

A warning chime will sound and the "currently unavailable" warning message appears in the vehicle information display.

- When the INFINITI Drive Mode Selector is turned to the SNOW mode (To use the ICC system, turn the INFINITI Drive Mode Selector to a mode other than the SNOW mode, push the MAIN switch to turn off the ICC and reset the ICC switch by pressing the MAIN switch again.)

  For details about the INFINITI Drive Mode Selector, see "INFINITI Drive Mode Selector" (P.5-21).
- When the VDC system is off (To use the ICC system, turn on the VDC system. Push the MAIN switch to turn off the ICC system and reset the ICC switch by pushing the MAIN switch again.)

  For details about the VDC system, see "Vehicle Dynamic Control (VDC) system" (P.5-129).
- When ABS or VDC (including the traction control system) is operating
- When a wheel is slipping (To use the ICC system, make sure the wheels are no longer slipping.)

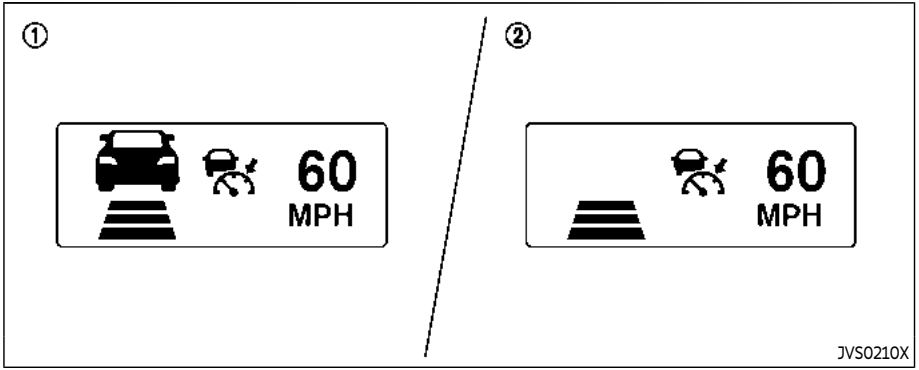

① System set display with vehicle ahead

② System set display without vehicle ahead

The driver sets the desired vehicle speed based on the road conditions. The ICC system maintains the set vehicle speed, similar to standard cruise control, as long as no vehicle is detected in the lane ahead.

The ICC system displays the set speed.

Vehicle detected ahead:

When a vehicle is detected in the lane ahead, the ICC system decelerates the vehicle by controlling the throttle and applying the brakes to match the speed of a slower vehicle ahead. The system then controls the vehicle speed based on the speed of the vehicle ahead to maintain the driver selected distance.

NOTE:

- **The stop lights of the vehicle come on when braking is performed by the ICC system.**
- **When the brake operates, a noise may be heard. This is not a malfunction.**

When a vehicle ahead is detected, the vehicle ahead detection indicator comes on. The ICC system will also display the set speed and selected distance.

Vehicle ahead not detected:

When a vehicle is no longer detected ahead, the ICC system gradually accelerates your vehicle to resume the previously set vehicle speed. The ICC system then maintains the set speed.

When a vehicle is no longer detected the vehicle ahead detection indicator turns off.

If a vehicle ahead appears during acceleration to the set vehicle speed or any time the ICC system is in operation, the system controls the distance to that vehicle.

When a vehicle is no longer detected under approximately 15 MPH (24 km/h), the system will be canceled.

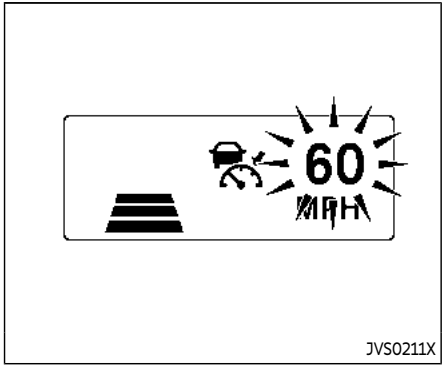

When passing another vehicle, the set speed indicator will flash when the vehicle speed exceeds the set speed. The vehicle detect indicator will turn off when the area ahead of the vehicle is open. When the pedal is released, the vehicle will return to the previously set speed.

Even though your vehicle speed is set in the ICC system, you can depress the accelerator pedal when it is necessary to accelerate your vehicle rapidly.

How to change the set vehicle speed

To cancel the preset speed, use any of these methods:

- Push the CANCEL switch. The set vehicle speed indicator will go out.
- Tap the brake pedal. The set vehicle speed indicator will go out.
- Turn the MAIN switch off. Both the Intelligent Cruise Control system set indicator (green) and set vehicle speed indicator will go out.

To reset at a faster cruising speed, use one of the following methods:

- Depress the accelerator pedal. When the vehicle attains the desired speed, push and release the SET/COAST (-) switch.
- Push and hold the RESUME/ACCELERATE (+) switch. The set vehicle speed will increase by approximately 5 MPH (5 km/h for Canada).
- Push, then quickly release the RESUME/ACCELERATE (+) switch. Each time you do this, the set speed will increase by approximately 1 MPH (1 km/h for Canada).

To reset at a slower cruising speed, use one of the following methods:

- Lightly tap the brake pedal. When the vehicle attains the desired speed, push the SET/COAST (-) switch and release it.
- Push and hold the SET/COAST (-) switch. The set vehicle speed will decrease by approximately 5 MPH (5 km/h for Canada).
- Push, then quickly release the SET/COAST (-) switch. Each time you do this, the set speed will decrease by approximately 1 MPH (1 km/h for Canada).

To resume the preset speed, push and release the RESUME/ACCELERATE (+) switch. The vehicle will resume the last set cruising speed when the vehicle speed is over 20 MPH (32 km/h).

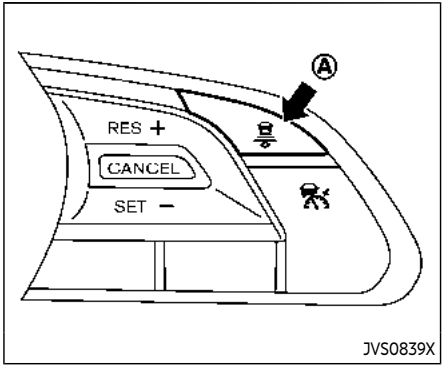

How to change the set distance to the vehicle ahead

The distance to the vehicle ahead can be selected at any time depending on the traffic conditions.

Each time the DISTANCE switch Ⓐ is pushed, the set distance will change to long, middle, short and back to long again in that sequence.

Distance	Display	Approximate distance at 60 MPH (100 km/h) [ft (m)]
Long	60 MPH	200 (60)
Middle	60 MPH	150 (45)
Short	60 MPH	90 (30)

JVS0250M

- The distance to the vehicle ahead will change according to the vehicle speed. The higher the vehicle speed, the longer the distance.
- If the engine is stopped, the set distance becomes “long”. (Each time the engine is started, the initial setting becomes “long”.)

Approach warning

If your vehicle comes closer to the vehicle ahead due to rapid deceleration of that vehicle or if another vehicle cuts in, the system warns the driver with the chime and ICC system display. Decelerate by depressing the brake pedal to maintain a safe

vehicle distance if:

- The chime sounds.
- The vehicle ahead detection indicator and set distance indicator blink.

The warning chime may not sound in some cases when there is a short distance between vehicles. Some examples are:

- When the vehicles are traveling at the same speed and the distance between vehicles is not changing
- When the vehicle ahead is traveling faster and the distance between vehicles is increasing
- When a vehicle cuts in near your vehicle

The warning chime will not sound when:

- Your vehicle approaches other vehicles that are parked or moving slowly.
- The accelerator pedal is depressed, overriding the system.

NOTE:

The approach warning chime may sound and the system display may blink when the radar sensor detects objects on the side of the vehicle or on the side of the road. This may cause the ICC system to decelerate or accelerate the vehicle. The radar sensor may detect these objects when the vehicle is driven on winding roads, narrow roads, hilly roads or when entering or exiting a curve. In these cases you will have to manually control the proper distance ahead of your vehicle.

Also, the sensor sensitivity can be affected by vehicle operation (steering maneuver or driving position in the lane) or traffic or vehicle condition (for example, if a vehicle is being driven with some damage).

Automatic cancellation

A chime sounds under the following conditions and the control is automatically canceled.

- When the vehicle ahead is not detected and your vehicle is traveling below the speed of 15 MPH (24 km/h)
- When the system judges the vehicle is at standstill
- When the shift lever is not in the D position or Manual mode
- When the parking brake is applied
- When the INFINITI Drive Mode Selector is turned to the SNOW mode
- When the VDC system is turned off
- When ABS or VDC (including the traction control system) operates
- When distance measurement becomes impaired due to adhesion of dirt or obstruction to the sensor
- When a wheel slips
- When the radar signal is temporarily interrupted

Vehicle-to-vehicle distance control mode limitations

WARNING

Listed below are the system limitations for the ICC system. Failure to operate the vehicle in accordance with these system limitations could result in serious injury or death.

- **The system is primarily intended for use on straight, dry, open roads with light traffic. It is not advisable to use the system in city traffic or congested areas.**
- **This system will not adapt automatically to road conditions. This system should be used in evenly flowing traffic. Do not use the system on roads with sharp curves, or on icy roads, in heavy rain or in fog.**
- **As there is a performance limit to the distance control function, never rely solely on the ICC system. This system does not correct careless, inattentive or absent-minded driving, or overcome poor visibility in rain, fog, or**

other bad weather. Decelerate the vehicle speed by depressing the brake pedal, depending on the distance to the vehicle ahead and the surrounding circumstances in order to maintain a safe distance between vehicles.

- **If the vehicle ahead comes to a stop, the vehicle decelerates to a standstill within the limitations of the system. The system will cancel once it judges that the vehicle has come to a standstill and sound a warning chime. To prevent the vehicle from moving, the driver must depress the brake pedal.**
- **Always pay attention to the operation of the vehicle and be ready to manually control the proper following distance. The vehicle-to-vehicle distance control mode of the ICC system may not be able to maintain the selected distance between vehicles (following distance) or selected vehicle speed under some circumstances.**
- **The system may not detect the vehicle in front of you in certain road or weather conditions. To avoid accidents, never use the ICC system under the following conditions:**
  - **On roads where the traffic is heavy or there are sharp curves**
  - **On slippery road surfaces such as on ice or snow, etc.**
  - **During bad weather (rain, fog, snow, etc.)**
  - **When rain, snow or dirt adhere to the system sensor**
  - **On steep downhill roads (the vehicle may go beyond the set vehicle speed and frequent braking may result in overheating the brakes)**
  - **On repeated uphill and downhill roads**
  - **When traffic conditions make it difficult to keep a proper distance between vehicles because of frequent acceleration or deceleration**
- **In some road or traffic conditions, a vehicle or object can unexpectedly come into the sensor detection zone and cause automatic braking. You may need to control the distance from other vehicles using the accelerator pedal. Always stay alert and avoid using the ICC system when it is not recommended in this section.**

The radar sensor will not detect the following objects:

- Stationary and slow moving vehicles
- Pedestrians or objects in the roadway
- Oncoming vehicles in the same lane
- Motorcycles traveling offset in the travel lane

The sensor generally detects the signals returned from the vehicle ahead. Therefore, if the sensor cannot detect the reflection from the vehicle ahead, the ICC system may not maintain the selected distance.

The following are some conditions in which the sensor cannot detect the signals:

- When the snow or road spray from traveling vehicles reduces the sensor's visibility
- When excessively heavy baggage is loaded in the rear seat or the trunk of your vehicle

The ICC system is designed to automatically check the sensor's operation within the limitation of the system. When the sensor is covered with dirt or is obstructed, the system will automatically be canceled. If the sensor is covered with ice, a transparent or translucent vinyl bag, etc., the ICC system may not detect them. In these instances, the vehicle-to-vehicle distance control mode may not cancel and may not be able to maintain the selected following distance

from the vehicle ahead. Be sure to check and clean the sensor regularly.

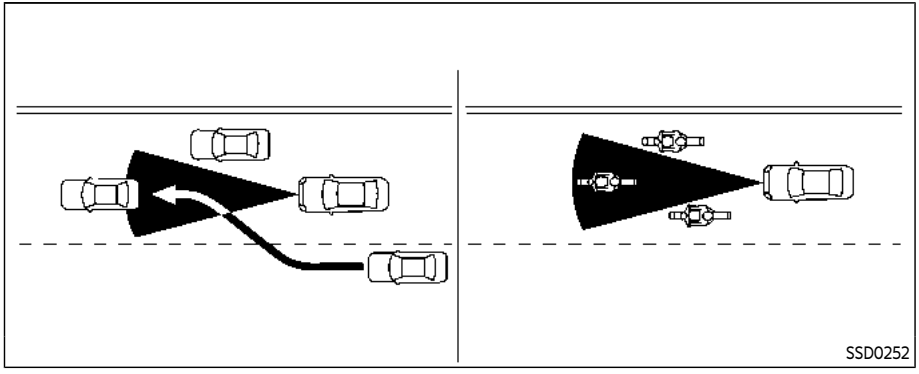

The detection zone of the radar sensor is limited. A vehicle ahead must be in the detection zone for the vehicle-to-vehicle distance detection mode to maintain the selected distance from the vehicle ahead.

A vehicle ahead may move outside of the detection zone due to its position within the same lane of travel. Motorcycles may not be detected in the same lane ahead if they are traveling offset from the centerline of the lane. A vehicle that is entering the lane ahead may not be detected until the vehicle has completely moved into the lane. **If this occurs, the ICC system may warn you by blinking the system indicator and sounding the chime. The driver may have to manually control the proper distance away from vehicle traveling ahead.**

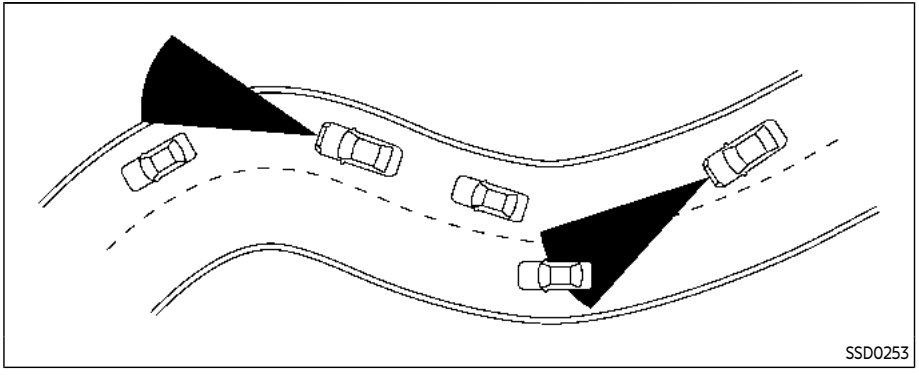

When driving on some roads, such as winding, hilly, curved, narrow roads, or roads which are under construction, the radar sensor may detect vehicles in a different lane, or may temporarily not detect a vehicle traveling ahead. This may cause the ICC system to decelerate or accelerate the vehicle.

The detection of vehicles may also be affected by vehicle operation (steering maneuver or traveling position in the lane, etc.) or vehicle condition. **If this occurs, the ICC system may warn you by blinking the system indicator and sounding the chime unexpectedly. You will have to manually control the proper distance away from the vehicle traveling ahead.**

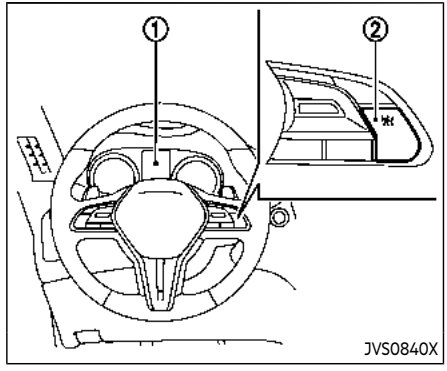

① Vehicle information display
② MAIN switch

System temporarily unavailable

Condition A:

Under the following conditions, the ICC system is automatically canceled. The chime will sound and the "currently unavailable" warning message will appear in the vehicle information display.

- When the VDC is turned off
- When the ABS or VDC (including the traction control system) operates
- When a tire slips

- When the INFINITI Drive Mode Selector is turned to the SNOW mode
- When the radar signal is temporarily interrupted

Action to take:

When the conditions listed above are no longer present, turn the ICC system back on to use the system.

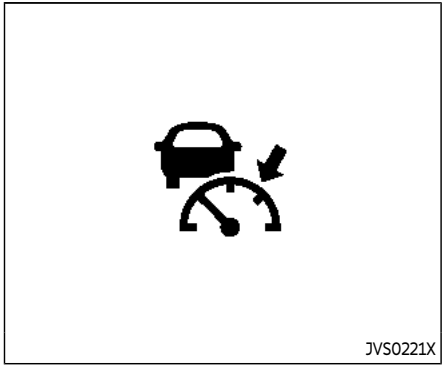

ICC system warning

Condition B:

Under the following conditions, making it impossible to detect a vehicle ahead, the ICC system is automatically canceled.

The chime will sound, the ICC system warning (orange) and the "front radar obstruction" warning message will appear in the vehicle information display.

- When the radar sensor area of the front bumper is covered with dirt or is obstructed

Action to take:

If the warning (orange) or warning message appears, stop the vehicle in a safe place, place the shift lever in the P (Park) position and turn the engine off. When the radar signal is temporarily interrupted, clean the sensor area of the front bumper and restart the engine. If the warning (orange) or warning message continues to be displayed, have the ICC system checked. It is recommended you visit an INFINITI retailer for this service.

- When driving on roads with limited road structures or buildings (for example, long bridges, deserts, snow fields, driving next to long walls)

Action to take:

When the above conditions no longer exist, turn the ICC system back on to use the system.

Condition C:

When the ICC system is not operating properly, the chime sounds and the ICC system warning (orange) will appear.

Action to take:

If the warning appears, stop the vehicle in a safe place and place the shift lever in the P (Park) position. Turn the engine off, restart the engine, resume driving and set the ICC system again.

If it is not possible to set the system or the warning stays on, it may indicate that the ICC system is malfunctioning. Although the vehicle is still driveable under normal conditions, have the vehicle checked. It is recommended you visit an INFINITI retailer for this service.

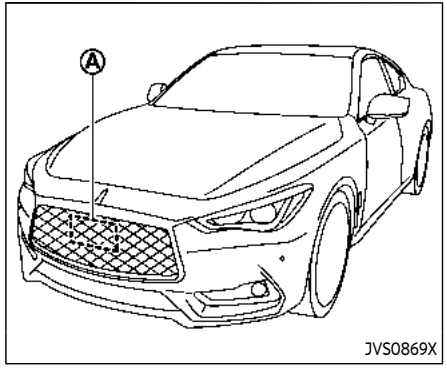

System maintenance

The sensor for the ICC system Ⓐ is located behind the grille of the front bumper.

To keep the ICC system operating properly, be sure to observe the following:

- Always keep the sensor area of the front grille clean.
- Do not strike or damage the areas around the sensor.
- Do not cover or attach stickers or similar objects on the front bumper near the sensor area. This could cause failure or malfunction.
- Do not attach metallic objects near the sensor area (brush guard, etc.). This could cause failure or malfunction.
- Do not alter, remove or paint the front bumper. It is recommended you contact an INFINITI retailer before customizing or restoring the front bumper.

FCC Notice:

For USA:

This device complies with Part 15 of the FCC Rules. Operation is subject to the following two conditions:

1. **This device may not cause harmful interference, and**
2. **This device must accept any interference received, including interference that may cause undesired operation.**

FCC Warning

Changes or modification not expressly approved by the party responsible for compliance could void the user's authority to operate the equipment.

For Canada:

This device complies with Industry Canada licence-exempt RSS standard(s). Operation is subject to the following two conditions:

1. **This device may not cause interference, and**
2. **This device must accept any interference, including interference that may cause undesired operation of the device.**

CONVENTIONAL (fixed speed) CRUISE CONTROL MODE

This mode allows driving at a speed between 25 to 90 MPH (40 to 144 km/h) without keeping your foot on the accelerator pedal.

WARNING

- **In the conventional (fixed speed) cruise control mode, a warning chime does not sound to warn you if you are too close to the vehicle ahead, as neither the presence of the vehicle ahead nor the vehicle-to-vehicle distance is detected.**
- **Pay special attention to the distance between your vehicle and the vehicle ahead of you or a collision could occur.**
- **Always confirm the setting in the ICC system display.**
- **Do not use the conventional (fixed speed) cruise control mode when driving under the following conditions:**
  - **when it is not possible to keep the vehicle at a set speed**
  - **in heavy traffic or in traffic that varies in speed**
  - **on winding or hilly roads**
  - **on slippery roads (rain, snow, ice, etc.)**
  - **in very windy areas**
- **Doing so could cause a loss of vehicle control and result in an accident.**

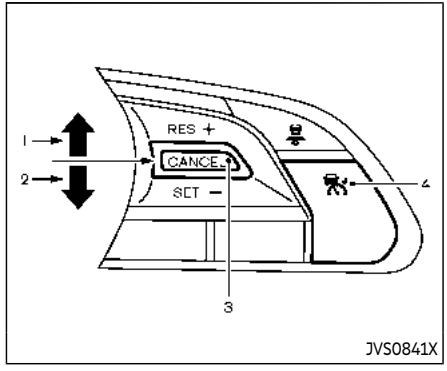

Conventional (fixed speed) cruise control switches

1. RESUME/ACCELERATE (+) switch:
   Resumes set speed or increases speed incrementally.
2. SET/COAST (-) switch:
   Sets the desired cruise speed, reduces speed incrementally.
3. CANCEL switch:
   Deactivates the system without erasing the set speed.
4. MAIN switch:
   Master switch to activate the system.

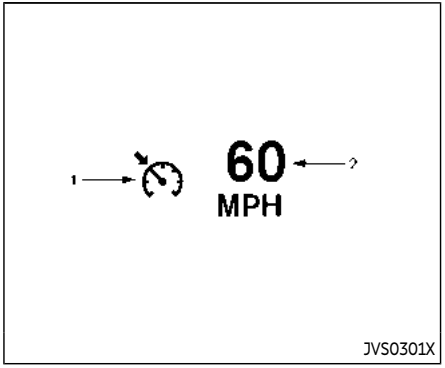

Conventional (fixed speed) cruise control mode display and indicators

The display is located in the vehicle information display.

1. Cruise indicator:

   This indicator indicates the condition of ICC system depending on a color.

   - Cruise control ON indicator (white):

     Indicates that the MAIN switch is ON.
   - Cruise control set indicator (green):

     Displays while the vehicle speed is controlled by the conventional (fixed speed) cruise control mode of the ICC system.
   - Cruise control system warning (orange):

     Indicates that there is a malfunction in the ICC system.
2. Set vehicle speed indicator:

   This indicator indicates the set vehicle speed.

   For Canadian models, the speed is displayed in km/h.

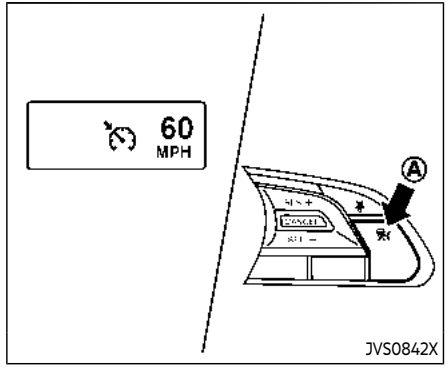

Operating conventional (fixed speed) cruise control mode

To turn on the conventional (fixed speed) cruise control mode, push and hold the MAIN switch Ⓐ for longer than about 1.5 seconds.

When pushing the MAIN switch on, the conventional (fixed speed) cruise control mode display and indicators are displayed in the vehicle information display. After you hold the MAIN switch on for longer than about 1.5 seconds, the ICC system display turns off. The cruise indicator appears. You can now set your desired cruising speed. Pushing the MAIN switch again will turn the

system completely off.

When the ignition switch is placed in the OFF position, the system is also automatically turned off.

To use the ICC system again, quickly push and release the MAIN switch (vehicle-to-vehicle distance control mode) or push and hold it (conventional cruise control mode) again to turn it on.

When the Distance Control Assist (DCA) system is on, the conventional (fixed speed) cruise control mode cannot be turned on even though the MAIN switch is pushed and held.

To turn on the conventional (fixed speed) cruise control mode, turn off the DCA system. See "Distance Control Assist (DCA)" (P.5-89).

CAUTION

To avoid accidentally engaging cruise control, make sure to turn the MAIN switch off when not using the ICC system.

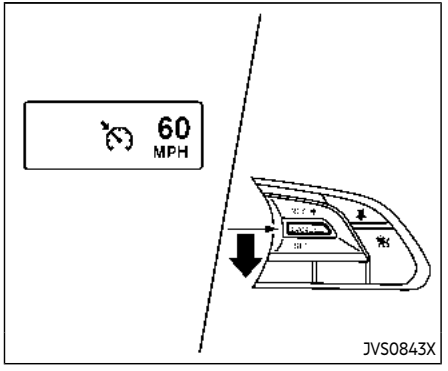

To set cruising speed, accelerate your vehicle to the desired speed, push the SET/COAST (-) switch and release it. (The color of the cruise indicator changes to green and set vehicle speed indicator comes on.) Take your foot off the accelerator pedal. Your vehicle will maintain the set speed.

- **To pass another vehicle,** depress the accelerator pedal. When you release the pedal, the vehicle will return to the previously set speed.
- The vehicle may not maintain the set speed when going up or down steep hills. If this happens, manually maintain vehicle speed.

To cancel the preset speed, use any of the following methods:

1. Push the CANCEL switch. The vehicle speed indicator will turn off.
2. Tap the brake pedal. The vehicle speed indicator will turn off.
3. Turn the MAIN switch off. Both the cruise indicator and vehicle speed indicator will turn off.

To reset at a faster cruising speed, use one of the following three methods:

1. Depress the accelerator pedal. When the vehicle attains the desired speed, push and release the SET/COAST (-) switch.
2. Push and hold the RESUME/ACCELERATE (+) switch. When the vehicle attains the desired speed, release the switch.
3. Push, then quickly release the RESUME/ACCELERATE (+) switch. Each time you do this, the set speed will increase by about 1 MPH (1.6 km/h).

To reset at a slower cruising speed, use one of the following three methods:

1. Lightly tap the brake pedal. When the vehicle attains the desired speed, push the SET/COAST (-) switch and release it.
2. Push and hold the SET/COAST (-) switch. Release the switch when the vehicle slows down to the desired speed.

3. Push, then quickly release the SET/ COAST (-) switch. Each time you do this, the set speed will decrease by about 1 MPH (1.6 km/h).

To resume the preset speed, push and release the RESUME/ACCELERATE (+) switch. The vehicle will resume the last set cruising speed when the vehicle speed is over 25 MPH (40 km/h).

System temporarily unavailable

A chime sounds under the following conditions and the control is automatically canceled.

- When the vehicle slows down more than 8 MPH (13 km/h) below the set speed
- When the shift lever is not in the D (Drive) or manual shift mode
- When the parking brake is applied.
- When the VDC operates (including the traction control system)
- When a wheel slips

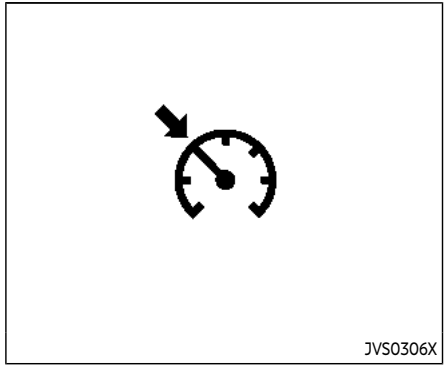

Warning

When the system is not operating properly, the chime sounds and the color of the cruise indicator will change to orange.

Action to take:

If the color of the cruise indicator changes to orange, stop the vehicle in a safe place and place the shift lever in the P (Park) position. Turn the engine off, restart the engine, resume driving and then perform the setting again.

If it is not possible to set or the indicator stays on, it may indicate that the system is malfunctioning. Although the vehicle is still driveable under normal conditions, have the vehicle checked. It is recommended you visit an INFINITI retailer for this service.

DISTANCE CONTROL ASSIST (DCA) (if so equipped)

WARNING

Failure to follow the warnings and instructions for proper use of the DCA system could result in serious personal injury or death.

- **Always drive carefully and attentively when using the DCA system. Read and understand the Owner's Manual thoroughly before using the DCA system. To avoid serious injury or death, do not rely on the system to prevent accidents or to control the vehicle's speed in emergency situations. Do not use the DCA system except in appropriate road and traffic conditions.**
- **This system is only an aid to assist the driver and is not a collision warning or avoidance device. It is the driver's responsibility to stay alert, drive safely and be in control of the vehicle at all times.**
- **As there is a performance limit to the distance control function, never rely solely on the DCA system. This system does not correct careless, inattentive or absent-minded driving, or overcome poor visibility in rain, fog, or other bad weather. Decelerate the vehicle speed by depressing the brake pedal, depending on the distance to the vehicle ahead and the surrounding circumstances in order to maintain a safe distance between vehicles.**
- **Always pay attention to the operation of the vehicle and be ready to manually decelerate to maintain the proper following distance. The DCA system may not be able to decelerate the vehicle under some circumstances.**
- **This system only brakes and moves the accelerator pedal upward to help assist the driver to maintain a following distance from the vehicle ahead. Acceleration should be operated by the driver.**
- **The DCA system does not control vehicle speed or warn you when you approach stationary and slow moving vehicles. You must pay attention to vehicle operation to maintain proper distance from vehicles ahead.**
- **The DCA system automatically decelerates your vehicle to help assist the driver to maintain a following distance from the vehicle ahead. Manually brake when deceleration is required to maintain a safe distance upon sudden braking by the vehicle ahead or when a vehicle suddenly appears in front of you. Always stay alert when using the DCA system.**
- **If the vehicle ahead comes to a stop, the vehicle decelerates to a standstill within the limitations of the system. The system will cancel with a warning chime once it judges that the vehicle has come to a standstill. To prevent the vehicle from moving, the driver must depress the brake pedal.**

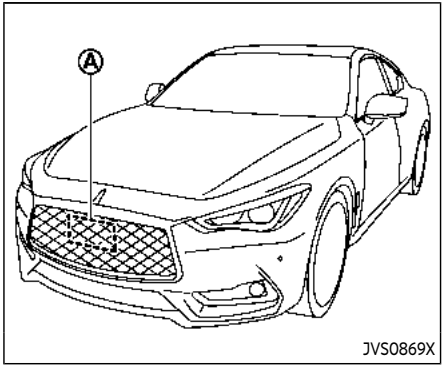

The DCA system is intended to assist the driver in keeping a following distance from the vehicle ahead traveling in the same lane and direction.

If the radar sensor Ⓐ detects a slower moving vehicle ahead, the system will reduce the vehicle speed to help assist the driver to maintain a following distance.

The system automatically controls the throttle and applies the brakes (up to approximately 40% of vehicle braking power) if necessary.

The detection range of the sensor is approximately 650 ft (200 m) ahead.

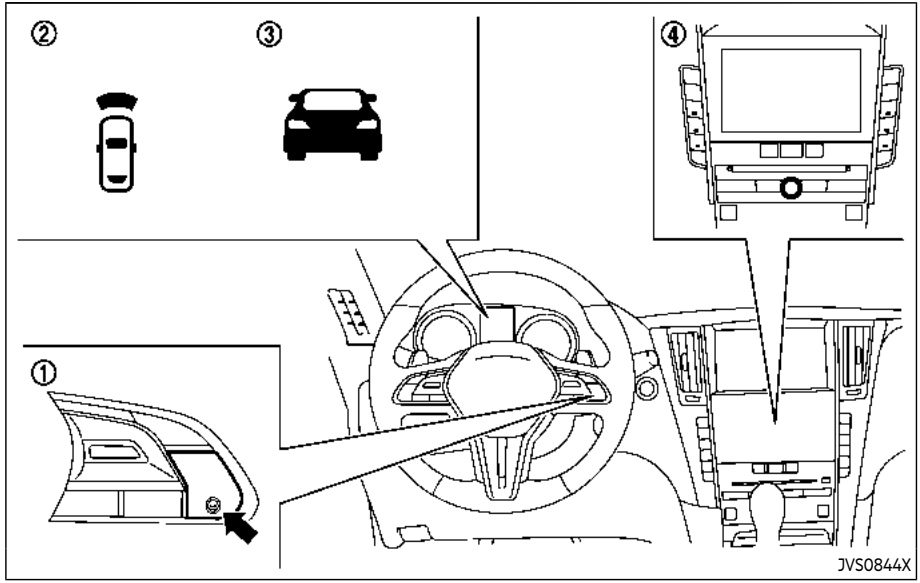

① Dynamic driver assistance switch
② Driver assist system forward indicator (green) (on the vehicle information display)
③ Vehicle ahead detection indicator (on the vehicle information display)
④ Lower display

DCA SYSTEM OPERATION

WARNING

Failure to follow the warnings and instructions for proper use of the DCA system could result in serious personal injury or death.

- **When the vehicle ahead detection indicator is not illuminated, system will not control the vehicle or warn the driver.**
- **Never place your foot under the brake pedal. Your foot may be caught when the system controls the brake.**
- **Depending on the position of the accelerator pedal, the system may not be able to assist the driver to release the accelerator pedal appropriately.**

The DCA system brakes and moves the accelerator pedal upward according to the distance from and the relative speed of the vehicle ahead to help assist the driver in maintaining a following distance. The system will decelerate as necessary and if the vehicle ahead comes to a stop, the vehicle decelerates to a standstill. However, the DCA system can only apply up to approximately 40% of the vehicle's total braking power. If a vehicle moves into the traveling lane ahead or if a vehicle traveling ahead rapidly decelerates, the distance between vehicles may become closer because the DCA system cannot decelerate the vehicle quickly enough. If this occurs, the DCA system will sound a warning chime and blink the system display to notify the driver to take necessary action.

See “Approach warning” (P.5-93).

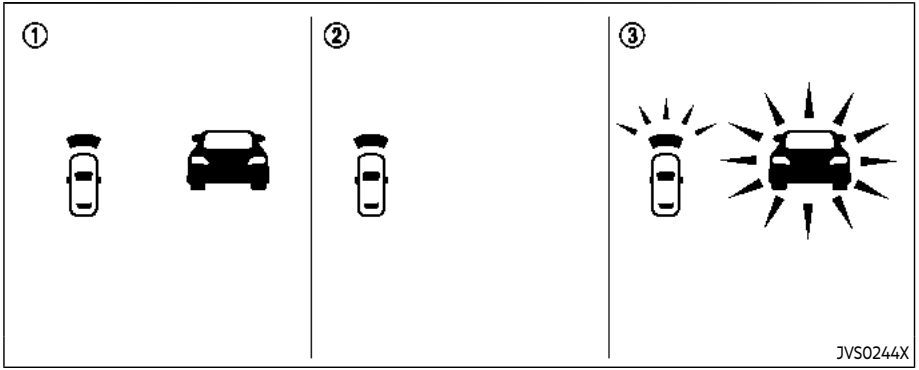

① System set display with a vehicle ahead

② System set display without a vehicle ahead

③ System set display with a vehicle ahead (brake operation is necessary)

The DCA system helps assist the driver to keep a following distance to the vehicle ahead by braking and moving the accelerator pedal upward in the normal driving condition.

When a vehicle ahead is detected:

The vehicle ahead detection indicator appears.

When the vehicle approaches a vehicle ahead:

- If the driver's foot is not on the accelerator pedal, the system activates the brakes to decelerate smoothly as necessary. If the vehicle ahead comes to a stop, the vehicle decelerates to a standstill within the limitations of the system.
- If the driver's foot is on the accelerator pedal, the system moves the accelerator pedal upward to assist the driver to release the accelerator pedal.

When brake operation by the driver is required:

The system alerts the driver by a warning chime and blinking the vehicle ahead detection indicator. If the driver's foot is on the accelerator pedal after the warning, the system moves the accelerator pedal upward to assist the driver to switch to the brake pedal.

NOTE:

- **The stop lights of the vehicle come on when braking is performed by the DCA system.**
- **When the brake operates, a noise may be heard. This is not a malfunction.**

Overriding the system:

The following driver's operation overrides the system operation.

- When the driver depresses the accelerator pedal even further while the system is moving the accelerator pedal upward, the DCA system control of the accelerator pedal is canceled.
- When the driver's foot is on the accelerator pedal, the brake control by the system is not operated.
- When the driver's foot is on the brake pedal, neither the brake control nor the alert by the system operates.
- When the Intelligent Cruise Control (ICC) system is set, the DCA system will be inactive.

Approach warning

If your vehicle comes closer to the vehicle ahead due to rapid deceleration of that vehicle or if another vehicle cuts in, the system warns the driver with the chime and DCA system display. Decelerate by depressing the brake pedal to maintain a safe vehicle distance if:

- The chime sounds.
- The vehicle ahead detection indicator blinks.
- The driver assist system forward indicator (orange) blinks.

The warning chime may not sound in some cases when there is a short distance between vehicles. Some examples are:

- When the vehicles are traveling at the same speed and the distance between vehicles is not changing
- When the vehicle ahead is traveling faster and the distance between vehicles is increasing
- When a vehicle cuts in near your vehicle

The driver assist system forward indicator (orange) blinks and the warning chime will not sound when your vehicle approaches vehicles that are parked or moving slowly.

NOTE:

The approach warning chime may sound and the driver assist system forward indicator (orange) may blink when the radar sensor detects objects on the side of the vehicle or on the side of the road. This may cause the DCA system to decelerate or accelerate the vehicle. The radar sensor may detect these objects when the vehicle is driven on winding roads, narrow roads, hilly roads or when entering or exiting a curve. In these cases you will have to manually control the proper distance ahead of your vehicle.

Also, the sensor sensitivity can be affected by vehicle operation (steering maneuver or driving position in the lane) or traffic or vehicle condition (for example, if a vehicle is being driven with some damage).

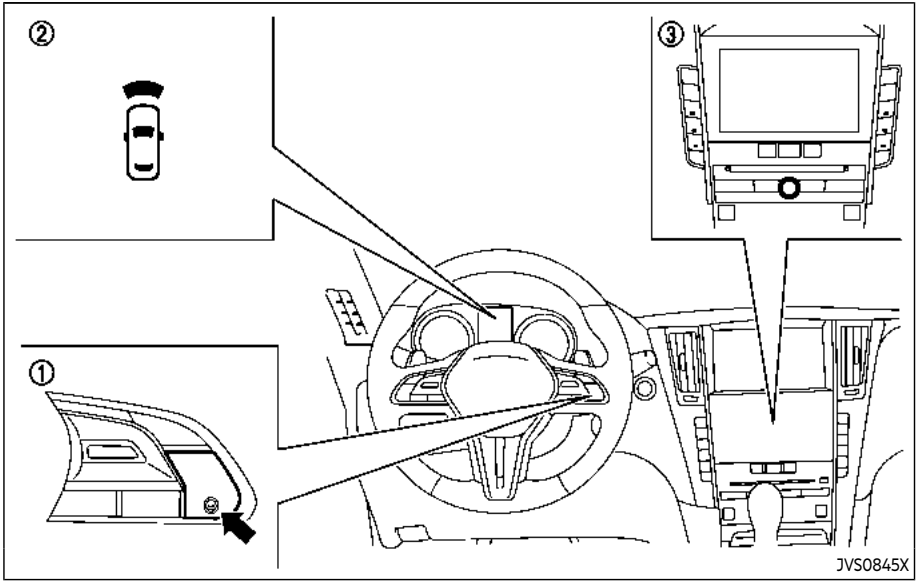

① Dynamic driver assistance switch
② Driver assist system forward indicator (green) (on the vehicle information display)
③ Lower display

TURNING THE DCA SYSTEM ON/OFF

To turn on the DCA system, push the dynamic driver assistance switch ① on the steering wheel after starting the engine. The driver assistance switch indicator ② in the vehicle information display will appear. Push the dynamic driver assistance switch ① again to turn off the DCA system. The driver assistance switch indicator ② will turn off.

The system will start to operate after the vehicle speed is above approximately 3 MPH (5 km/h).

The dynamic driver assistance switch ① is used for the DCA, Active Lane Control (if so equipped) and Blind Spot Intervention® systems. When the dynamic driver assistance switch ① is pushed, Active Lane Control and BSI systems will also turn on or off simultaneously. The DCA system can be individually set to on or off on the lower display ③. If the system is set to off, the system will not turn on even if the dynamic driver assistance switch ① is pushed to on. To set the system to on or off on the display, see "How to enable/disable the DCA system" (P.5-95).

When the conventional (fixed speed) cruise control mode is operating, the DCA system will not operate. (To use the DCA system, turn the conventional (fixed speed) cruise

control mode off, then push the dynamic driver assistance switch.)

For details about the conventional (fixed speed) cruise control mode, see "Intelligent Cruise Control (ICC)" (P.5-68).

When the engine is turned off, the DCA system is automatically turned off.

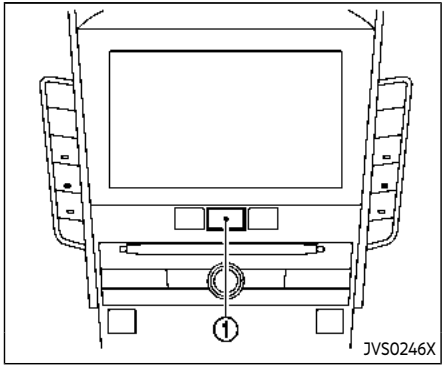

HOW TO ENABLE/DISABLE THE DCA SYSTEM

Perform the following steps to enable or disable the DCA system.

1. Push the MENU ① button and touch [Driver Assistance] on the lower display.
2. Touch [Forward Assist].
3. Touch [Distance Control] to enable or disable the system.

The displayed keys on the lower display may vary depending on models, specifications and software version.

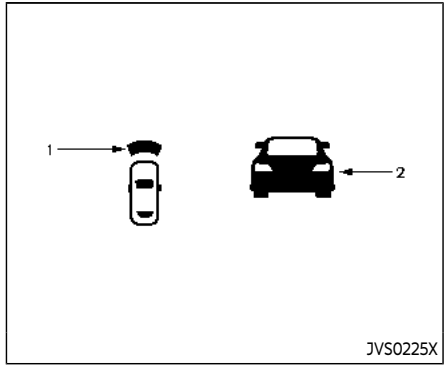

DCA SYSTEM DISPLAY AND INDICATORS

The display is located between the speedometer and tachometer.

1. Driver assist system forward indicator
   - Driver assist system forward indicator (green):

     Indicates that the DCA system is ON.
   - Driver assist system forward indicator (orange):

     Indicates whether there is a malfunction in the DCA system.
2. Vehicle ahead detection indicator:

   Indicates whether it detects a vehicle in

front of you.

DCA SYSTEM LIMITATIONS

WARNING

Listed below are the system limitations of the DCA system. Failure to operate the vehicle in accordance with these system limitations could result in serious injury or death.

- **This system will not adapt automatically to road conditions. Do not use the system on roads with sharp curves, or on icy roads, in heavy rain or in fog.**
- **The DCA system will not apply brake control while the driver's foot is on the accelerator pedal.**
- **As there is a performance limit to the distance control function, never rely solely on the DCA system. This system does not correct careless, inattentive or absent-minded driving, or overcome poor visibility in rain, fog, or other bad weather. Decelerate the vehicle speed by depressing the brake pedal, depending on the distance to the vehicle ahead and the surrounding circumstances in order to maintain a safe distance between vehicles.**
- **The system may not detect the vehicle in front of you in certain road or weather conditions. To avoid accidents, never use the DCA system under the following conditions:**
  - **On roads with sharp curves**
  - **On slippery road surfaces such as on ice or snow, etc.**
  - **During bad weather (rain, fog, snow, etc.)**
  - **When rain, snow or dirt adhere to the system sensor**
  - **On steep downhill roads (frequent braking may result in overheating the brakes)**
  - **On repeated uphill and downhill roads**
- **In some road or traffic conditions, a vehicle or object can unexpectedly come into the sensor detection zone and cause automatic braking. You may need to control the distance from other vehicles using the accelerator pedal. Always stay alert and avoid using the DCA system when it is not recommended in this section.**

The radar sensor will not detect the following objects:

- Stationary and slow moving vehicles
- Pedestrians or objects in the roadway
- Oncoming vehicles in the same lane
- Motorcycles traveling offset in the travel lane

The following are some conditions in which the sensor cannot detect the signals:

- When the snow or road spray from traveling vehicles reduces the sensor's visibility
- When excessively heavy baggage is loaded in the rear seat or the trunk of your vehicle

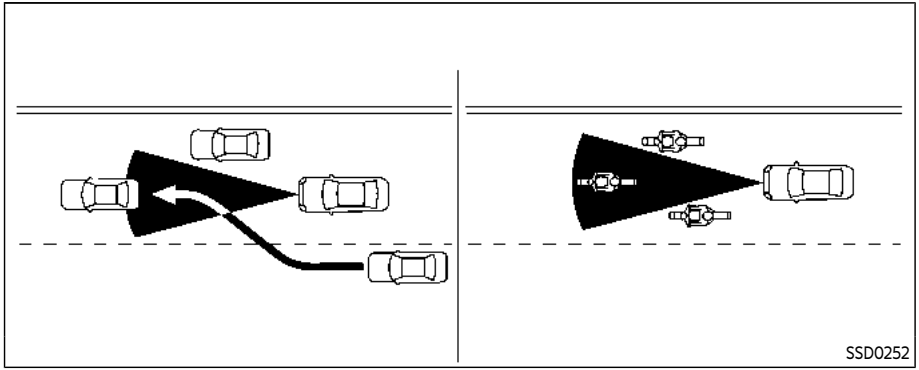

The detection zone of the sensor is limited. A vehicle ahead must be in the detection zone for the system to operate.

A vehicle ahead may move outside of the detection zone due to its position within the same lane of travel. Motorcycles may not be detected in the same lane ahead if they are traveling offset from the centerline of the lane. A vehicle that is entering the lane ahead may not be detected until the vehicle has completely moved into the lane. **If this occurs, the system may warn you by blinking the system indicator and sounding the chime. The driver may have to manually control the proper distance away from vehicle traveling ahead.**

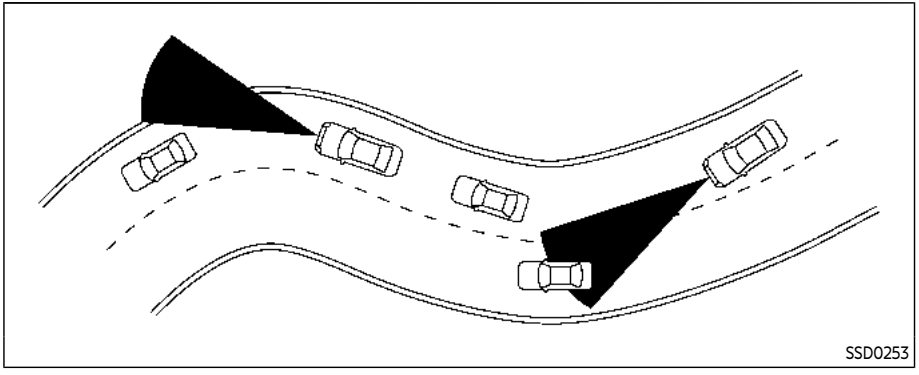

When driving on some roads, such as winding, hilly, curved, narrow roads, or roads which are under construction, the sensor may detect vehicles in a different lane, or may temporarily not detect a vehicle traveling ahead. This may cause the system to work inappropriately.

The detection of vehicles may also be affected by vehicle operation (steering maneuver or traveling position in the lane, etc.) or vehicle condition. **If this occurs, the system may warn you by blinking the system indicator and sounding the chime unexpectedly. You will have to manually control the proper distance away from the vehicle traveling ahead.**

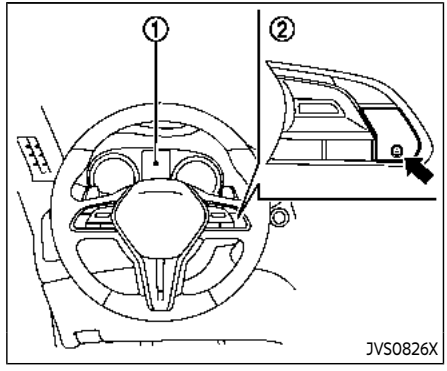

① Vehicle information display
② Dynamic driver assistance switch

SYSTEM TEMPORARILY UNAVAILABLE

Condition A

Under the following conditions, the DCA system is automatically canceled. The chime will sound and the "currently unavailable" warning message will appear in the vehicle information display. The system will not be able to be set.

- When the VDC system is off (To use the DCA system, turn on the VDC, then push the dynamic driver assistance switch ②.)

For details about the VDC system, see "Vehicle Dynamic Control (VDC) system" (P.5-129)

- When the VDC or ABS (including the traction control system) operates
- When the INFINITI Drive Mode Selector is turned to the SNOW mode (To use the DCA system, turn the INFINITI Drive Mode Selector to a mode other than the SNOW mode, then turn on the dynamic driver assistance switch ②.) For details about the INFINITI Drive Mode Selector, see "INFINITI Drive Mode Selector" (P.5-21)
- When the radar signal is temporarily interrupted

Action to take:

When the conditions listed above are no longer present, turn the DCA system back on to use the system.

Condition B

Under the following conditions, making it impossible to detect a vehicle ahead, the DCA system is automatically canceled.

The chime will sound, the driver assist system forward indicator (orange) and the "front radar obstruction" warning message will appear in the vehicle information display.

- When the radar sensor area of the front bumper is covered with dirt or is obstructed

Action to take:

If the driver assist system forward indicator (orange) and the warning message appear, stop the vehicle in a safe place, place the shift lever in the P (Park) position and turn the engine off. When the radar signal is temporarily interrupted, clean the sensor area of the front bumper and restart the engine. If the warning message continues to be displayed, have the DCA system checked. It is recommended you visit an INFINITI retailer for this service.

- When driving on roads with limited road structures or buildings (for example, long bridges, deserts, snow fields, driving next to long walls)

Action to take:

When the above conditions no longer exist, the DCA system will resume automatically.

SYSTEM MALFUNCTION

When the DCA system is not operating properly, the chime sounds, the driver assist system forward indicator (orange) and the system "malfunction" warning message will appear in the vehicle information display.

Action to take:

If the driver assist system forward indicator (orange) and the warning message appear, stop the vehicle in a safe place and place the shift lever in the P (Park) position. Turn the engine off, restart the engine, and turn on the DCA system again.

If it is not possible to set the system or the indicator stays on, it may indicate that the system is malfunctioning. Although the vehicle is still driveable under normal conditions, have the vehicle checked. It is recommended you visit an INFINITI retailer for this service.

SYSTEM MAINTENANCE

The sensor for the DCA system is common with the Intelligent Cruise Control (ICC) system and is located behind the grille of the front bumper.

For the sensor maintenance, see "Intelligent Cruise Control (ICC)" (P.5-68).

FCC Notice:

For USA:

This device complies with Part 15 of the FCC Rules. Operation is subject to the following two conditions:

1. **This device may not cause harmful interference, and**

2. **This device must accept any interference received, including interference that may cause undesired operation.**

FCC Warning

Changes or modification not expressly approved by the party responsible for compliance could void the user's authority to operate the equipment.

For Canada:

This device complies with Industry Canada licence-exempt RSS standard(s). Operation is subject to the following two conditions:

1. **This device may not cause interference, and**
2. **This device must accept any interference, including interference that may cause undesired operation of the device.**

FORWARD EMERGENCY BRAKING (FEB) WITH PEDESTRIAN DETECTION SYSTEM (if so equipped)

WARNING

Failure to follow the warnings and instructions for proper use of the FEB with pedestrian detection system could result in serious personal injury or death.

- **The FEB with pedestrian detection system is a supplemental aid to the driver. It is not a replacement for the driver's attention to traffic conditions or responsibility to drive safely. It cannot prevent accidents due to carelessness or dangerous driving techniques.**
- **The FEB with pedestrian detection system does not function in all driving, traffic, weather and road conditions.**

The FEB with pedestrian detection system can assist the driver when there is a risk of a forward collision with the vehicle ahead in the traveling lane or with a pedestrian.

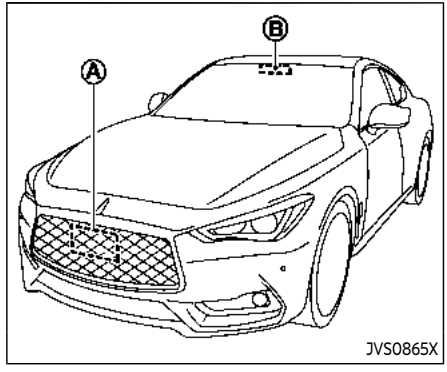

The FEB with pedestrian detection system uses a radar sensor Ⓐ located behind the grille of the front bumper to measure the distance to the vehicle ahead in the same lane.

For pedestrians, the FEB with pedestrian detection system uses a camera Ⓑ installed behind the windshield in addition to the radar sensor.

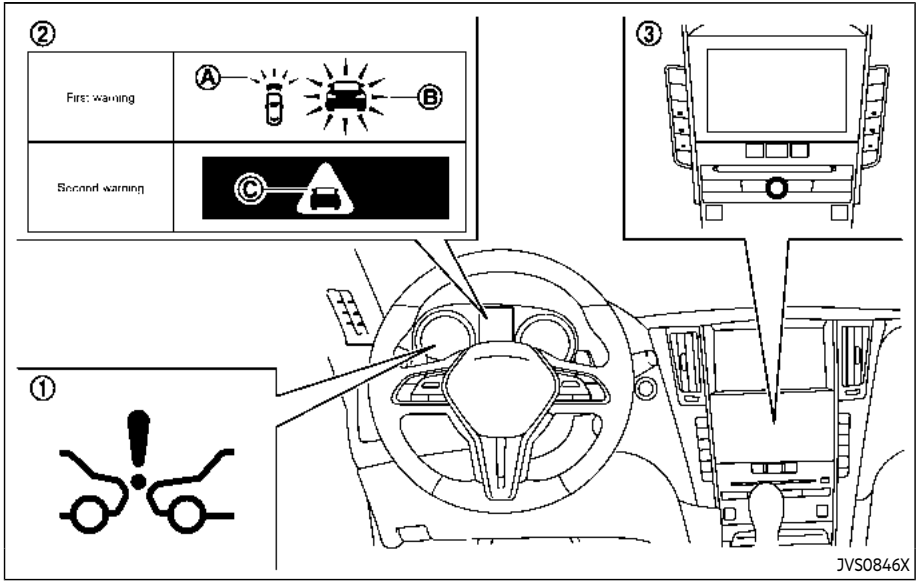

① FEB system warning light (on the instrument panel)

② Indicators and warnings (on the vehicle information display)

Ⓐ Driver assist system forward indicator

Ⓑ Vehicle ahead detection indicator

Ⓒ FEB system emergency warning indicator

③ Lower display

FEB WITH PEDESTRIAN DETECTION SYSTEM OPERATION

The FEB with pedestrian detection system operates at speeds above approximately 3 MPH (5 km/h). For the pedestrian detection function, the system operates at speeds between 6 – 37 MPH (10 – 60 km/h).

If a risk of a forward collision is detected, the FEB with pedestrian detection system will provide the first warning to the driver by flashing the driver assist system forward indicator (orange) Ⓐ and the vehicle ahead detection indicator (orange) Ⓑ, and providing an audible warning. In addition, the FEB with pedestrian detection system pushes the accelerator pedal up, and then the system applies partial braking. If the driver applies the brakes quickly and forcefully, but the FEB with pedestrian detection system detects that there is still the possibility of a forward collision, the system will automatically increase the braking force.

If the risk of a collision becomes imminent and the driver does not take action, the FEB with pedestrian detection system issues the second warning to the driver by flashing the FEB system emergency warning indicator (red) Ⓒ, providing an audible warning, and then automatically applies harder braking.

If a risk of a forward impact with a pedestrian is detected, the FEB with pedes-

trian detection system will provide a warning to the driver by flashing the FEB system emergency warning indicator (red) ©, provides an audible alert and the system will apply partial braking. If the driver applies the brakes quickly and forcefully but the FEB with pedestrian detection system detects that there is still the possibility of a forward impact with a pedestrian, the system will automatically increase the braking force. If the risk of collision becomes imminent and the driver does not take action, the FEB with pedestrian detection system automatically applies harder braking.

NOTE:

The vehicle's stop lights come on when any braking is performed by the FEB with pedestrian detection system.

Depending on vehicle speed and distance to the vehicle or pedestrian ahead, as well as driving and roadway conditions, the system may help the driver avoid a forward collision or may help mitigate the consequences of a collision should one be unavoidable. If the driver is handling the steering wheel, accelerating or braking, the FEB with pedestrian detection system will function later or will not function.

The automatic braking will cease under the following conditions:

- When the steering wheel is turned to avoid a collision.
- When the accelerator pedal is depressed.
- When there is no longer a vehicle or a pedestrian detected ahead.

If the FEB with pedestrian detection system has stopped the vehicle, the vehicle will remain at a standstill for approximately 2 seconds before the brakes are released.

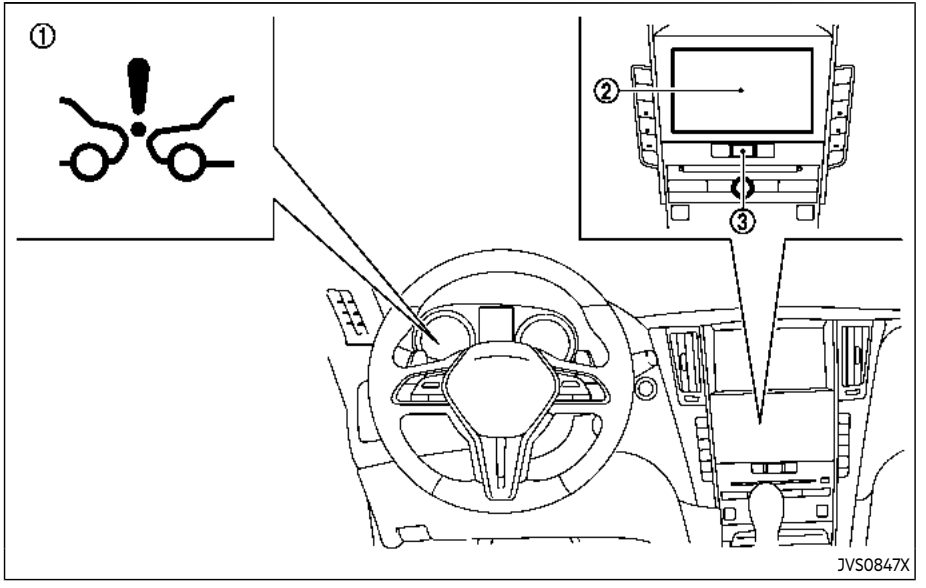

① FEB system warning light (on the instrument panel)
② Lower display
③ MENU button

TURNING THE FEB WITH PEDESTRIAN DETECTION SYSTEM ON/OFF

Perform the following steps to turn the FEB with pedestrian detection system on or off.

1. Push the MENU button ③ and touch [Driver Assistance] on the lower display ②.
2. Touch [Emergency Assist].
3. Touch [Emergency Braking] to turn the system ON/OFF.

When the FEB with pedestrian detection system is turned off, the FEB system warning light (orange) ① illuminates.

The displayed keys on the lower display may vary depending on models, specifications and software version.

NOTE:

- **The FEB with pedestrian detection system will be automatically turned ON when the engine is restarted.**
- **The Predictive Forward Collision Warning (PFCW) system is integrated into the FEB with pedestrian detection system. There is not a separate selection in the display for the PFCW system. When the FEB with pedestrian detection system is turned off, the PFCW system is also turned off.**

FEB WITH PEDESTRIAN DETECTION SYSTEM LIMITATIONS

WARNING

Listed below are the system limitations for the FEB with pedestrian detection system. Failure to operate the vehicle in accordance with these system limitations could result in serious injury or death.

- **The FEB with pedestrian detection system cannot detect all vehicles or pedestrian under all conditions.**
- **The radar sensor FEB with pedestrian detection system does not detect the following objects:**
  - **Small pedestrians (including small children), animals and cyclists.**
  - **Pedestrians in wheelchairs or using mobile transport such as scooters, child-operated toys, or skateboards.**
  - **Pedestrians who are seated or otherwise not in a full upright standing or walking position.**
  - **Oncoming vehicles**
  - **Crossing vehicles**
  - **Obstacles on the roadside**
- **The FEB with pedestrian detection system has some performance limitations.**
  - **If a stationary vehicle is in the vehicle's path, the FEB with pedestrian detection system will not function when the vehicle is driven at speeds over approximately 50 MPH (80 km/h).**
  - **For pedestrian detection, the FEB with pedestrian detection system will not function when the vehicle is driven at speeds over approximately 37 MPH (60 km/h) or below approximately 6 MPH (10km/h).**
- **The FEB with pedestrian detection system will not function for pedestrians in darkness or in tunnels, even if there is street lighting in the area.**
- **For pedestrians, the FEB with pedestrian detection system will not issue the first warning and will not push the accelerator pedal up.**
- **The FEB with pedestrian detection system may not function if the vehicle ahead is narrow (for example a motorcycle).**
- **The FEB with pedestrian detection system may not function if speed difference between the two vehicles is too small.**
- **The radar sensor FEB with pedestrian detection system may not function properly or detect a vehicle ahead in the following conditions:**
  - **Poor visibility (conditions such as rain, snow, fog, dust storms, sandstorms, and road spray from other vehicles)**
  - **Driving on a steep downhill slope or roads with sharp curves.**
  - **Driving on a bumpy road surface, such as an uneven dirt road.**
  - **If dirt, ice, snow or other material is covering the radar sensor area.**
  - **Interference by other radar sources.**
  - **The camera area of windshield is fogged up, or covered with dirt, water drops, ice, snow, etc.**
  - **Strong light (for example, sunlight or high beams from oncoming vehicles) enters the front camera. Strong light causes the area around the pedestrian to be**

cast in a shadow, making it difficult to see.

– A sudden change in brightness occurs. (For example, when the vehicle enters or exits a tunnel or a shaded area or lightning flashes.)

– The poor contrast of a person to the background, such as having clothing color or pattern which is similar to the background.

– The pedestrian's profile is partially obscured or unidentifiable due to the pedestrian transporting luggage, wearing bulky or very loose-fitting clothing or accessories.

- The system performance may degrade in the following conditions:
  – The vehicle is driven on a slippery road.
  – The vehicle is driven on a slope.
  – Excessively heavy baggage is loaded in the rear seat or the trunk of your vehicle.
- The system is designed to automatically check the sensor (radar and camera)'s functionality, within certain limitations. The system may not detect blockage of sensor areas covered by ice, snow or stickers, for example. In these cases, the system may not be able to warn the driver properly. Be sure that you check, clean and clear sensor areas regularly.
- In some road and traffic conditions, the FEB with pedestrian detection system may unexpectedly apply partial braking. When acceleration is necessary, depress the accelerator pedal to override the system.
- Excessive noise will interfere with the warning chime sound, and the chime may not be heard.

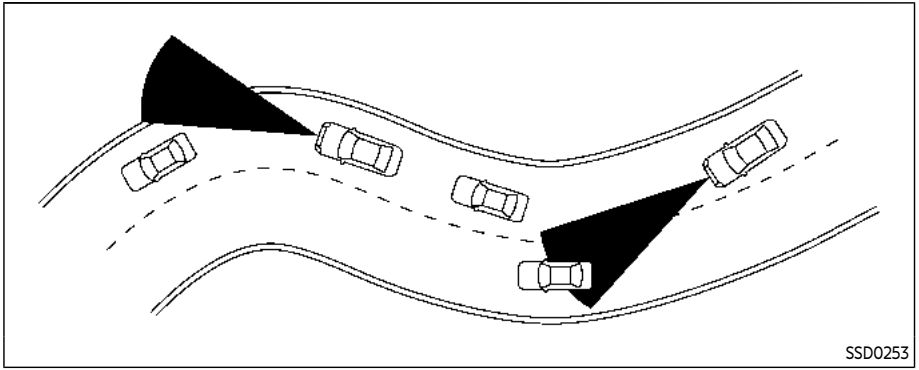

When driving on some roads, such as winding, hilly, curved, narrow roads, or roads which are under construction, the radar sensor may detect vehicles in a different lane, or may temporarily not detect a vehicle traveling ahead. This may cause the FEB with pedestrian detection system to work inappropriately.

The detection of vehicles may also be affected by vehicle operation (steering maneuver or traveling position in the lane, etc.) or vehicle condition. **If this occurs, the system may warn you by blinking the system indicator and sounding the chime unexpectedly. You will have to manually control the proper distance away from the vehicle traveling ahead.**

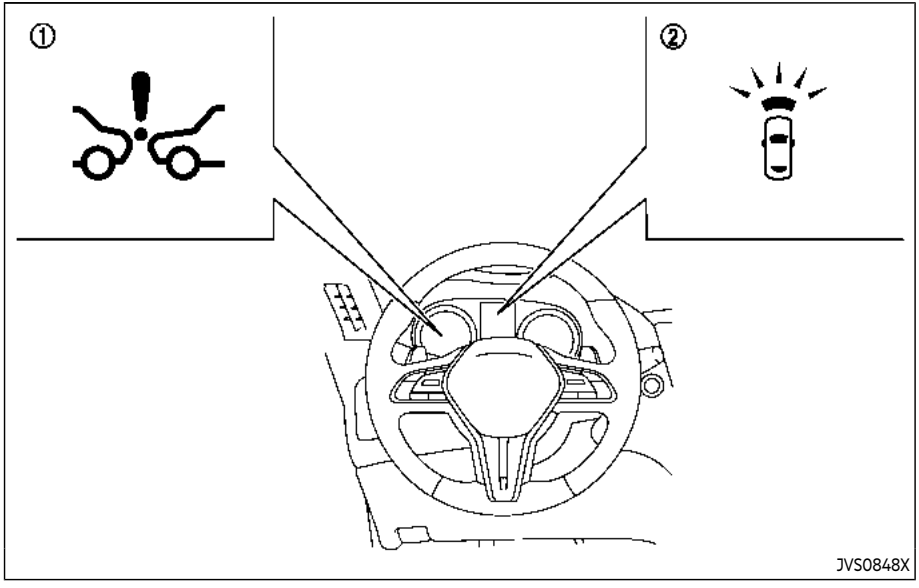

① FEB system warning light (on the instrument panel)

② Driver assist system forward indicator (on the vehicle information display)

SYSTEM TEMPORARILY UNAVAILABLE

Condition A

In the following conditions, the FEB system warning light (orange) ① and the driver assist system forward indicator (orange) ② blinks and the system will be turned off automatically.

- The radar sensor picks up interference from another radar source.
- The camera area of windshield is misted or frozen.
- Strong light is shining from the front.
- The cabin temperature is over approximately 104°F (40°C) in direct sunlight.
- The camera area of windshield glass is continuously covered with dirt, etc.

Action to take:

When the above conditions no longer exist, the FEB with pedestrian detection system will resume automatically.

NOTE:

When the inside of the windshield on camera area is misted or frozen, it will take a period of time to remove it after air conditioner turns on. If dirt appears on this area, it is recommended you visit an INFINITI retailer.

Condition B

Under the following conditions, making it impossible to detect a vehicle ahead, the FEB with pedestrian detection system is automatically turned off.

The FEB system warning light (orange) ① and the driver assist system forward indicator (orange) ② will illuminate and the "front radar obstruction" warning message will appear in the vehicle information display.

- When the sensor area of the front bumper is covered with dirt or is obstructed

Action to take:

If the FEB system warning light (orange) ① comes on, stop the vehicle in a safe place, place the shift lever in the P (Park) position and turn the engine off. Clean the radar cover on the front grille with a soft cloth, and restart the engine. If the FEB system warning light continues to illuminate, have the FEB with pedestrian detection system checked. It is recommended you visit an INFINITI retailer for this service.

- When driving on roads with limited road structures or buildings (for example, long bridges, deserts, snow fields, driving next to long walls)

Action to take:

When the above conditions no longer exist, the FEB with pedestrian detection system will resume automatically.

Condition C

When the accelerator pedal actuator detects that the internal motor temperature is high, the FEB with pedestrian detection system is automatically turned off. The FEB system warning light (orange) ① and the driver assist system forward indicator (orange) ② will illuminate and the "Unavailable High Accelerator Temperature" warning message will appear in the vehicle information display.

Action to take:

When the above conditions no longer exist, the FEB with pedestrian detection system will resume automatically.

SYSTEM MALFUNCTION

If the FEB with pedestrian detection system malfunctions, it will be turned off automatically, a chime will sound, the FEB system warning light (orange) ① and the driver assist system forward indicator (orange) ② will illuminate and the system "malfunction" warning message will appear in the vehicle information display.

Action to take:

If the FEB system warning light (orange) ① comes on, stop the vehicle in a safe location and place the shift lever in the P (Park) position. Turn the engine off and restart the engine. If the warning light continues to illuminate, have the FEB with pedestrian detection system checked. It is recommended you visit an INFINITI retailer for this service.

NOTE:

If the FEB with pedestrian detection system stops working, the PFCW system will also stop working.

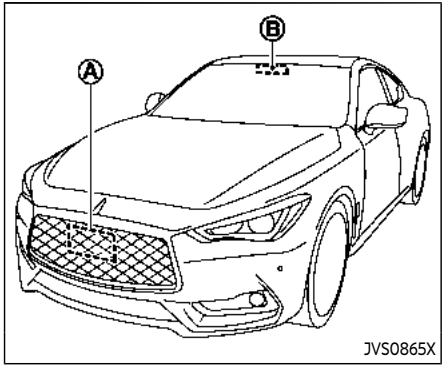

SYSTEM MAINTENANCE

The radar sensor Ⓐ is located behind the grille of the front bumper. The camera Ⓑ is located on the upper side of the windshield.

To keep the FEB with pedestrian detection system operating properly, be sure to observe the following:

- Always keep the sensor area of the front grille and windshield clean.
- Do not strike or damage the areas around the sensors (ex. grille, windshield).
- Do not cover or attach stickers, or install any accessory near the sensors. This could block sensor signals, and/or cause failure or malfunction.
- Do not attach metallic objects near the radar sensor area (brush guard, etc.). This could cause failure or malfunction.
- Do not place reflective materials, such as white paper or a mirror, on the instrument panel. The reflection of sunlight may adversely affect the camera unit's detection capability.
- Do not alter, remove or paint the front bumper. It is recommended you contact an INFINITI retailer before customizing or restoring the front grille.

FCC Notice:

For USA:

This device complies with Part 15 of the FCC Rules. Operation is subject to the following two conditions:

1. **This device may not cause harmful interference, and**
2. **This device must accept any interference received, including interference that may cause undesired operation.**

FCC Warning

Changes or modification not expressly approved by the party responsible for compliance could void the user's authority to operate the equipment.

For Canada:

This device complies with Industry Canada licence-exempt RSS standard(s). Operation is subject to the following two conditions:

1. **This device may not cause interference, and**
2. **This device must accept any interference, including interference that may cause undesired operation of the device.**

PREDICTIVE FORWARD COLLISION WARNING (PFCW) (if so equipped)

WARNING

Failure to follow the warnings and instructions for proper use of the PFCW system could result in serious injury or death.

- **The PFCW system helps warn the driver before a collision but will not avoid a collision. It is the driver's responsibility to stay alert, drive safely and be in control of the vehicle at all times.**

The PFCW system can help alert the driver when there is a sudden braking of a second vehicle traveling in front of the vehicle ahead in the same lane.

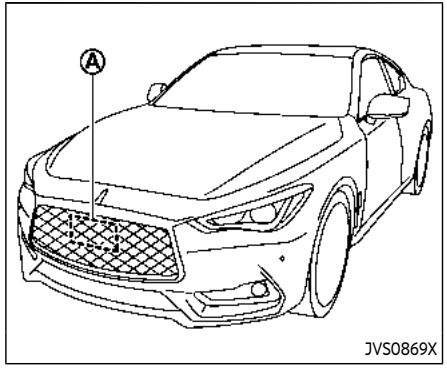

The PFCW system uses a radar sensor Ⓐ located behind the grille of the front bumper to measure the distance to a second vehicle ahead in the same lane.

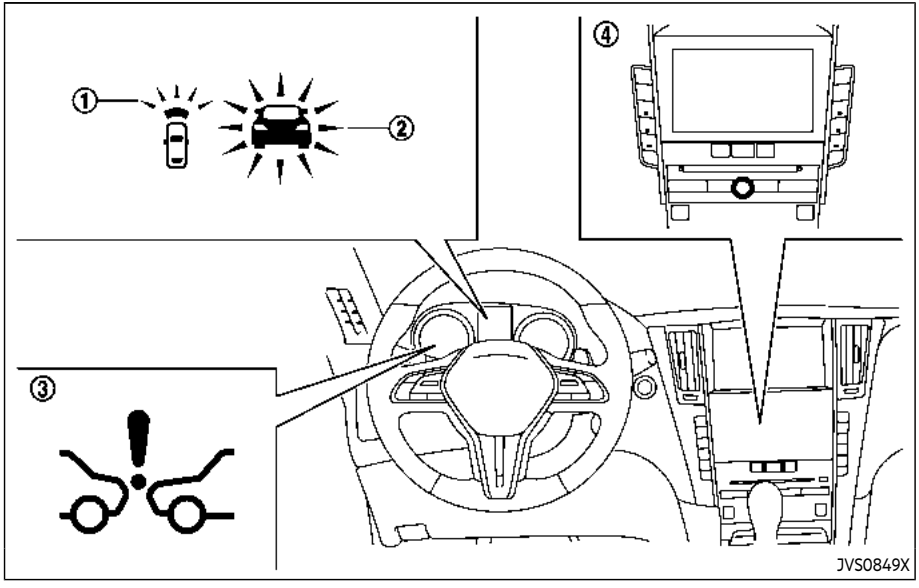

① Driver assist system forward indicator (on the vehicle information display)

② Vehicle ahead detection indicator (on the vehicle information display)

③ FEB system warning light (on the instrument panel)

④ Lower display

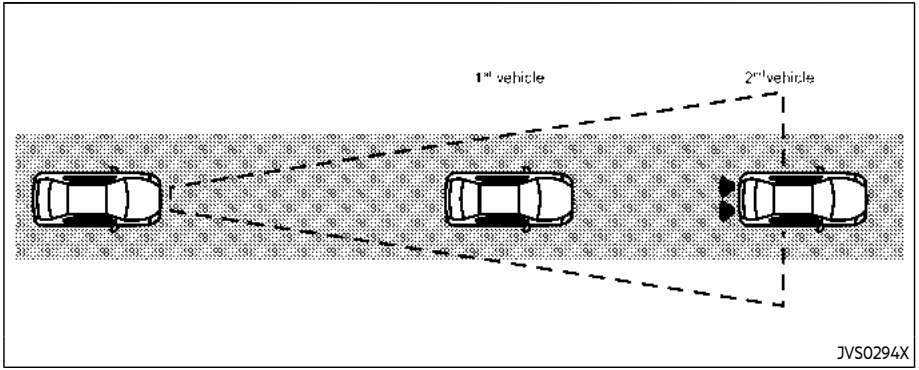

PFCW SYSTEM OPERATION

The PFCW system operates at speeds above approximately 3 MPH (5 km/h).

If there is a potential risk of a forward collision, the PFCW system will warn the driver by blinking the driver assist system forward indicator and the vehicle ahead detection indicator, and sounding an audible alert.

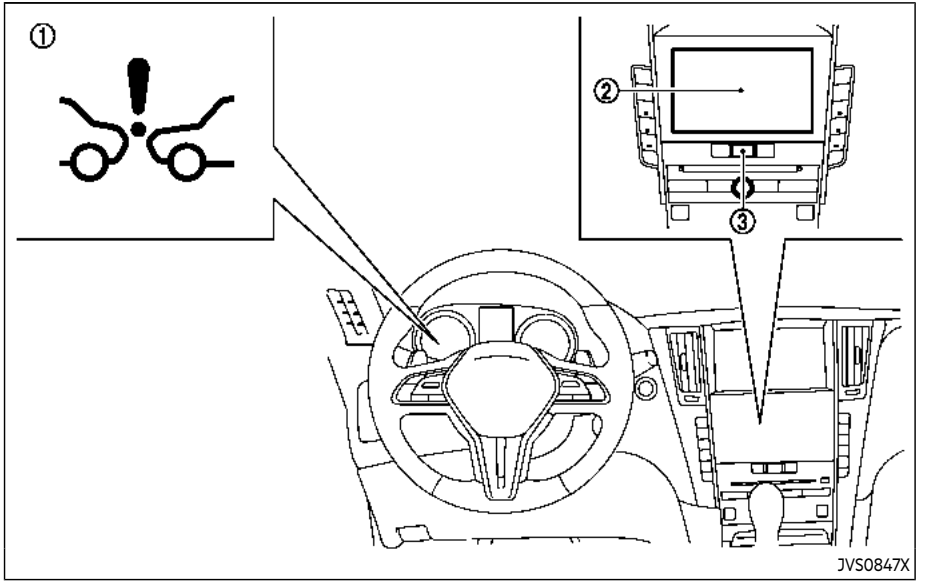

① FEB system warning light (on the instrument panel)
② Lower display
③ MENU button

TURNING THE PFCW SYSTEM ON/OFF

Perform the following steps to turn the PFCW system on or off.

1. Push the MENU button ③ and touch [Driver Assistance] on the lower display ②.
2. Touch [Emergency Assist].
3. Touch [Emergency Braking] to turn the system ON/OFF.

When the PFCW system is turned off, the FEB system warning light (orange) ① illuminates.

The displayed keys on the lower display may vary depending on models, specifications and software version.

NOTE:

The PFCW system is integrated into the FEB with pedestrian detection system. There is not a separate selection in the display for the PFCW system. When the FEB with pedestrian detection system is turned off, the PFCW system is also turned off.

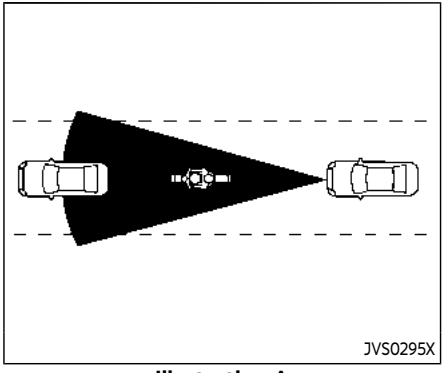

Illustration A

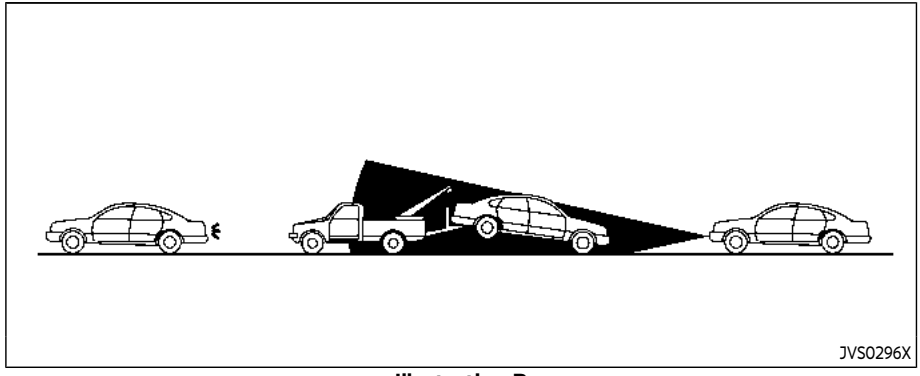

Illustration B

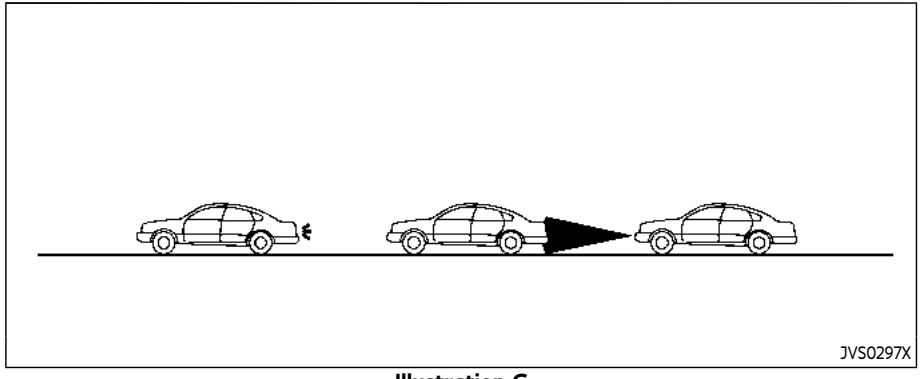

Illustration C

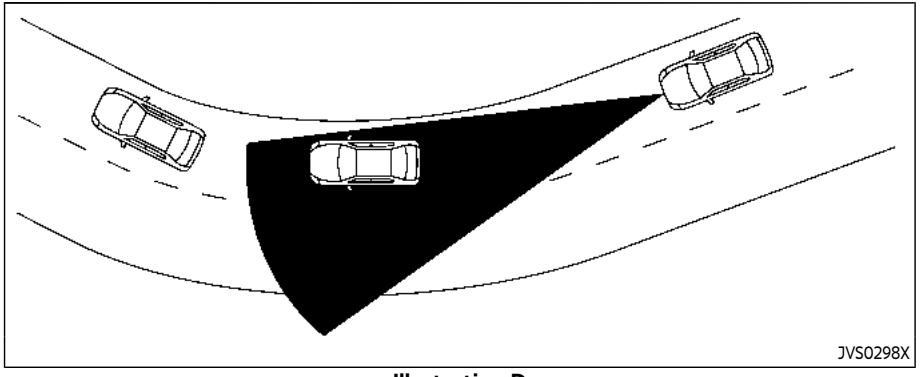

Illustration D

PFCW SYSTEM LIMITATIONS

WARNING

Listed below are the system limitations for the PFCW system. Failure to operate the vehicle in accordance with these system limitations could result in serious injury or death.

- **The PFCW system cannot detect all vehicles under all conditions.**
- **The radar sensor does not detect the following objects:**
  - **Pedestrians, animals or obstacles in the roadway**
  - **Oncoming vehicles**
  - **Crossing vehicles**
- **(Illustration A) The PFCW system does not function when a vehicle ahead is a narrow vehicle, such as a motorcycle.**
- **The radar sensor may not detect a vehicle ahead in the following conditions:**
  - **Snow or heavy rain**
  - **Dirt, ice, snow or other material covering the radar sensor**
  - **Interference by other radar sources**
  - **Snow or road spray from travelling vehicles.**
  - **Driving in a tunnel**
  - **(Illustration B) When the vehicle ahead is being towed.**
  - **(Illustration C) When the distance to the vehicle ahead is too close, the beam of the radar sensor is obstructed.**
  - **(Illustration D) When driving on a steep downhill slope or roads with sharp curves.**
- **The system is designed to automatically check the sensor's functionality, within certain limitations. The system may not detect some forms of obstruction of the sensor area such as ice, snow, stickers, for example. In these cases, the system may not be able to warn the driver properly. Be sure that you check, clean and clear the sensor area regularly.**
- **Excessive noise will interfere with the warning chime sound, and the chime**

may not be heard.

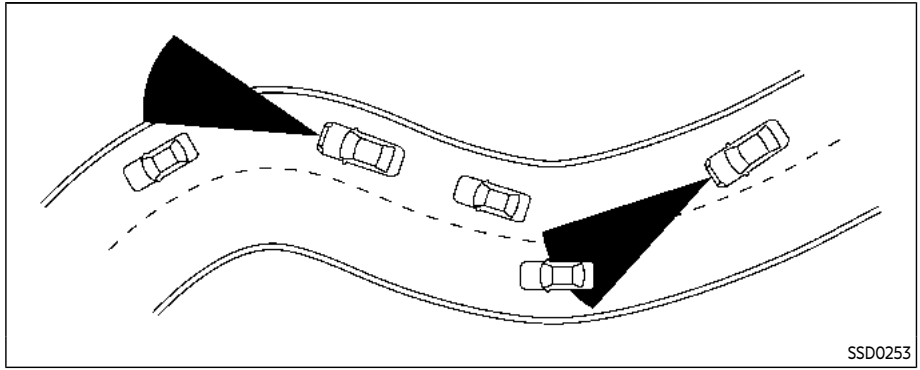

When driving on some roads, such as winding, hilly, curved, narrow roads, or roads which are under construction, the radar sensor may detect vehicles in a different lane, or may temporarily not detect a vehicle traveling ahead. This may cause the PFCW system to work inappropriately.

The detection of vehicles may also be affected by vehicle operation (steering maneuver or traveling position in the lane, etc.) or vehicle condition. **If this occurs, the system may warn you by blinking the system indicator and sounding the chime unexpectedly. You will have to manually control the proper distance away from the vehicle traveling ahead.**

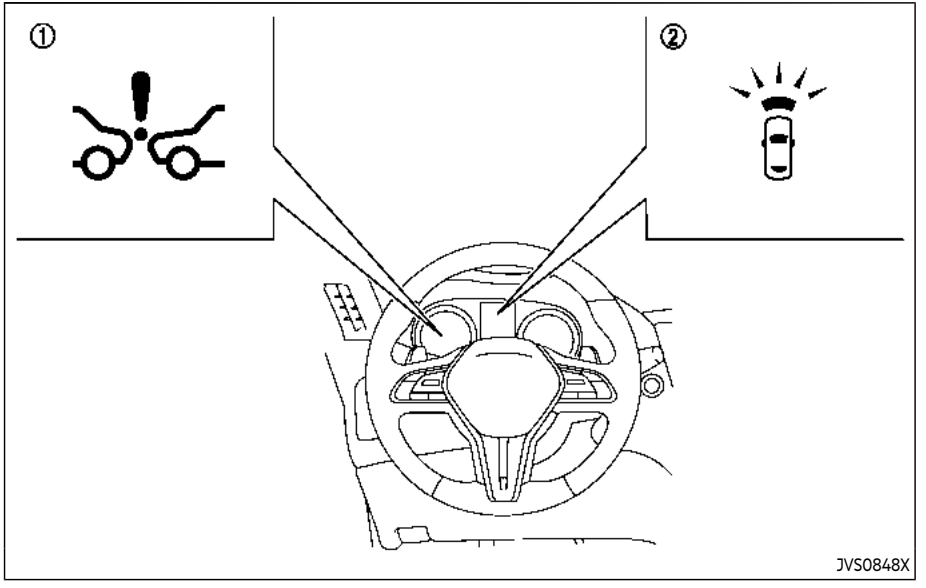

① FEB system warning light (on the instrument panel)

② Driver assist system forward indicator (on the vehicle information display)

SYSTEM TEMPORARILY UNAVAILABLE

Condition A

When the radar sensor picks up interference from another radar source, making it impossible to detect a vehicle ahead, the PFCW system is automatically turned off. The FEB system warning light (orange) ① and the driver assist system forward indicator (orange) ② will illuminate.

Action to take:

When the above conditions no longer exist, the PFCW system will resume automatically.

Condition B

Under the following conditions, making it impossible to detect a vehicle ahead, the PFCW system is automatically turned off.

The FEB system warning light (orange) ① and the driver assist system forward indicator (orange) ② will illuminate and the "front radar obstruction" warning message will appear in the vehicle information display.

- When the sensor area of the front bumper is covered with dirt or is obstructed

Action to take:

If the FEB system warning light (orange) ① comes on, stop the vehicle in a safe place, place the shift lever in the P (Park) position and turn the engine off. Clean the radar cover on the front grille with a soft cloth, and restart the engine. If the FEB system warning light (orange) ① continues to illuminate, have the PFCW system checked. It is recommended you visit an INFINITI retailer for this service.

- When driving on roads with limited road structures or buildings (for example, long bridges, deserts, snow fields, driving next to long walls)

Action to take:

When the above conditions no longer exist, the PFCW system will resume automatically.

NOTE:

If the FEB with pedestrian detection system stops working, the PFCW system will also stop working.

SYSTEM MALFUNCTION

If the PFCW malfunctions, it will be turned off automatically, a chime will sound, the FEB system warning light (orange) ① and the driver assist system forward indicator (orange) ② will illuminate, and the system "malfunction" message will appear in the vehicle information display.

Action to take:

If the FEB system warning light (orange) ① comes on, stop the vehicle in a safe location, turn the engine off and restart the engine. If the warning light continues to illuminate, have the PFCW system checked. It is recommended you visit an INFINITI retailer for this service.

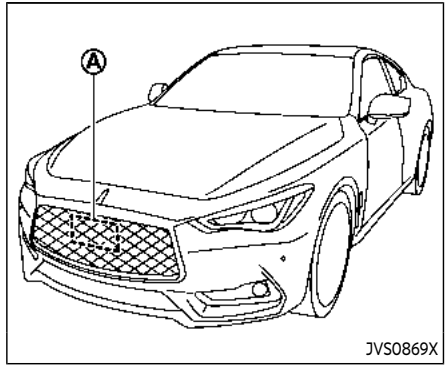

SYSTEM MAINTENANCE

The sensor Ⓐ is located behind the grille of the front bumper.

To keep the system operating properly, be sure to observe the following:

- Always keep the sensor area of the front grille clean.
- Do not strike or damage the areas around the sensor.
- Do not cover or attach stickers or similar objects on the front bumper near the sensor area. This could cause failure or malfunction.
- Do not attach metallic objects near the sensor area (brush guard, etc.). This

could cause failure or malfunction.

- Do not alter, remove or paint the front bumper. It is recommended you contact an INFINITI retailer before customizing or restoring the front bumper.

FCC Notice:

For USA:

This device complies with Part 15 of the FCC Rules. Operation is subject to the following two conditions:

1. **This device may not cause harmful interference, and**
2. **This device must accept any interference received, including interference that may cause undesired operation.**

FCC Warning

Changes or modification not expressly approved by the party responsible for compliance could void the user's authority to operate the equipment.

For Canada:

This device complies with Industry Canada licence-exempt RSS standard(s). Operation is subject to the following two conditions:

1. **This device may not cause interference, and**
2. **This device must accept any interference, including interference that may cause undesired operation of the device.**

BREAK-IN SCHEDULE

CAUTION

During the first 1,200 miles (2,000 km), follow these recommendations to obtain maximum engine performance and ensure the future reliability and economy of your new vehicle.

Failure to follow these recommendations may result in shortened engine life and reduced engine performance.

- Avoid driving for long periods at constant speed, either fast or slow. Do not run the engine over 4,000 rpm.
- Do not accelerate at full throttle in any gear.
- Avoid quick starts.
- Avoid hard braking as much as possible.

FUEL EFFICIENT DRIVING TIPS

Follow these easy-to-use Fuel Efficient Driving Tips to help you achieve the most fuel economy from your vehicle.

1. Use smooth accelerator and brake pedal application.
   - Avoid rapid starts and stops.
   - Use smooth, gentle accelerator and brake application whenever possible.
   - Maintain constant speed while commuting and coast whenever possible.
2. Maintain constant speed.
   - Look ahead to try and anticipate and minimize stops.
   - Synchronizing your speed with traffic lights allows you to reduce your number of stops.
   - Maintaining a steady speed can minimize red light stops and improve fuel efficiency.
3. Use air conditioning (A/C) at higher vehicle speeds.
   - Below 40 MPH (64 km/h), it is more efficient to open windows to cool the vehicle due to reduced engine load.
   - Above 40 MPH (64 km/h), it is more efficient to use A/C to cool the vehicle due to increased aerodynamic drag.
   - Recirculating the cool air in the cabin when the A/C is on reduces cooling load.

4. Drive at economical speeds and distances.
   - Observing the speed limit and not exceeding 60 MPH (97 km/h) (where legally allowed) can improve fuel efficiency due to reduced aerodynamic drag.
   - Maintaining a safe following distance behind other vehicles reduces unnecessary braking.
   - Safely monitoring traffic to anticipate changes in speed permits reduced braking and smooth acceleration changes.
   - Select a gear range suitable to road conditions.
5. Use cruise control.
   - Using cruise control during highway driving helps maintain a steady speed.
   - Cruise control is particularly effective in providing fuel savings when driving on flat terrains.
6. Plan for the shortest route.
   - Utilize a map or navigation system to determine the best route to save time.
7. Avoid idling.
   - Shutting off your engine when safe for stops exceeding 30-60 seconds saves fuel and reduces emissions.
8. Buy an automated pass for toll roads.
   - Automated passes permit drivers to use special lanes to maintain cruising speed through the toll and avoid stopping and starting.
9. Winter warm up.
   - Limit idling time to minimize impact to fuel economy.
   - Vehicles typically need no more than 30 seconds of idling at start-up to effectively circulate the engine oil before driving.
   - Your vehicle will reach its ideal operating temperature more quickly while driving versus idling.
10. Keeping your vehicle cool.
    - Park your vehicle in a covered parking area or in the shade whenever possible.
    - When entering a hot vehicle, opening the windows will help to reduce the inside temperature faster, resulting in reduced demand on your A/C system.

- Keep your engine tuned up.
- Follow the recommended scheduled maintenance.
- Keep the tires inflated to the correct pressure. Low tire pressure increases tire wear and lowers fuel economy.
- Keep the wheels in correct alignment. Improper alignment increases tire wear and lowers fuel economy.
- Use the recommended viscosity engine oil. (See “Engine oil and oil filter recommendation” (P.10-6).)

INTELLIGENT ALL-WHEEL DRIVE (AWD) (if so equipped)

If any malfunction occurs in the Intelligent All-Wheel Drive (AWD) system while the engine is running, warning messages appear in the vehicle information display.

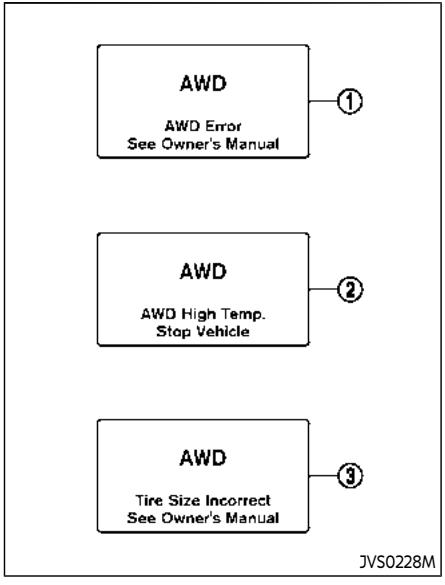

If the "AWD Error" warning ① appears, there may be a malfunction in the Intelligent AWD system. Reduce vehicle speed and have the system checked as soon as possible. It is recommended you visit an INFINITI retailer for this service.

The "AWD High Temp." (high temperature) warning ② may appear while trying to free a stuck vehicle due to increased oil temperature. The driving mode may change to Two-Wheel Drive (2WD). If this warning is displayed, stop the vehicle with the engine idling, as soon as it is safe to do so. Then if the warning turns off, you can continue driving.

The "Tire Size Incorrect" warning ③ may appear if there is a large difference between the diameters of front and rear wheels. Pull off the road in a safe area, with the engine idling. Check that all tire sizes are the same, that the tire pressure is correct and that the tires are not excessively worn.

If any warning message continues to be displayed, have your vehicle checked as soon as possible. It is recommended you visit an INFINITI retailer for this service.

⚠ WARNING

- **For AWD equipped vehicles, do not attempt to raise two wheels off the ground and shift the transmission to any drive or reverse position with the engine running. Doing so may result in drivetrain damage or unexpected vehicle movement which could result in serious vehicle damage or personal injury.**

- **Do not attempt to test an AWD equipped vehicle on a 2-wheel dynamometer (such as the dynamometers used by some states for emissions testing) or similar equipment even if the other two wheels are raised off the ground. Make sure that you inform the test facility personnel that your vehicle is equipped with AWD before it is placed on a dynamometer. Using the wrong test equipment may result in drivetrain damage or unexpected vehicle movement which could result in serious vehicle damage or personal injury.**

CAUTION

- **Do not operate the engine on a free roller when any of the wheels are raised.**
- **If the "AWD Error" warning appears while driving there may be a malfunction in the AWD system. Reduce the vehicle speed and have your vehicle checked as soon as possible. It is recommended you visit an INFINITI retailer for this service.**
- **If the "AWD Error" warning remains on after the above operation, have your vehicle checked as soon as possible. It is recommended you visit an INFINITI retailer for this service.**
- **The power train may be damaged if you continue driving with the "AWD Error" warning on.**

PARKING/PARKING ON HILLS

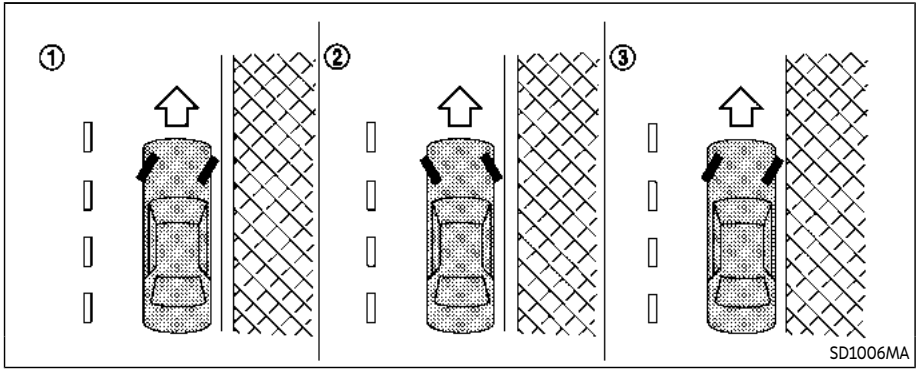

WARNING

- **Do not stop or park the vehicle over flammable materials such as dry grass, waste paper or rags. They may ignite and cause a fire.**
- **Never leave the engine running while the vehicle is unattended.**
- **Do not leave children unattended inside the vehicle. They could unknowingly activate switches or controls. Unattended children could become involved in serious accidents.**
- **To help avoid risk of injury or death through unintended operation of the vehicle and/or its systems, do not leave children, people who require the assistance of others or pets unattended in your vehicle. Additionally, the temperature inside a closed vehicle on a warm day can quickly become high enough to cause a significant risk of injury or death to people and pets.**
- **Safe parking procedures require that both the parking brake be applied and the transmission placed into P (Park). Failure to do so could cause the vehicle to move unexpectedly or roll away and result in an accident.**
- **Make sure the automatic transmission shift lever has been pushed as far forward as it can go and cannot be moved without depressing the foot brake pedal.**

1. Firmly apply the parking brake.
2. Move the shift lever to the P (Park) position.
3. To help prevent the vehicle from rolling into the street when parked on a sloping drive way, it is a good practice to turn the wheels as illustrated.
   - HEADED DOWNHILL WITH CURB: ①

     Turn the wheels into the curb and move the vehicle forward until the curb side wheel gently touches the curb.
   - HEADED UPHILL WITH CURB: ②

     Turn the wheels away from the curb and move the vehicle back until the curb side wheel gently touches the curb.
   - HEADED UPHILL OR DOWNHILL, NO CURB: ③

     Turn the wheels toward the side of the road so the vehicle will move away from the center of the road if it

moves.

4. Push the ignition switch to the OFF position.

ELECTRIC POWER STEERING TYPE

WARNING

- **If the engine is not running or is turned off while driving, the power assist for the steering will not work. Steering will be harder to operate.**
- **When the power steering warning light illuminates with the engine running, the power assist for the steering will cease operation. You will still have control of the vehicle but the steering will be harder to operate.**

The electric power steering is designed to provide power assist while driving to operate the steering wheel with light force.

When the steering wheel is operated repeatedly or continuously while parking or driving at a very low speed, the power assist for the steering wheel will be reduced. This is to prevent overheating of the electric power steering and protect it from getting damaged. While the power assist is reduced, steering wheel operation will become heavy. When the temperature of the electric power steering goes down, the power assist level will return to normal. Avoid repeating such steering wheel operations that could cause the electric power steering to overheat.

You may hear a sound when the steering wheel is operated quickly. However, this is not a malfunction.

If the power steering warning light illuminates while the engine is running, it may indicate the electric power steering is not functioning properly and may need servicing. It is recommended you have the electric power steering checked by an INFINITI retailer. (See “Power steering warning light” (P.2-16).)

When the power steering warning light illuminates with the engine running, the power assist for the steering will cease operation. You will still have control of the vehicle. However, greater steering effort is needed, especially in sharp turns and at low speeds.

DIRECT ADAPTIVE STEERING TYPE

WARNING

- **When the power steering warning light illuminates with the engine running, the power assist for the steering will cease operation. You will still**

have control of the vehicle, but the steering will be harder to operate.

- **If wheels or tires other than the INFINITI recommended ones are used, Direct Adaptive Steering may not operate properly and the power steering warning light may illuminate.**
- **Do not modify the vehicle's suspension. If suspension parts such as shock absorbers, struts, springs, stabilizer bars, bushings and wheels are not INFINITI recommended for your vehicle or are extremely deteriorated, Direct Adaptive Steering may not operate properly and the power steering warning light may illuminate.**
- **Do not modify the vehicle's steering. If steering parts are not INFINITI recommended for your vehicle or are extremely deteriorated, Direct Adaptive Steering may not operate properly and the power steering warning light may illuminate.**
- **If the VDC warning light illuminates, the power steering warning light may also illuminate at the same time. Stop the vehicle in a safe location, turn the engine off and restart the engine. If the power steering warning light continues to illuminate, have the system checked. It is recommended you visit an INFINITI retailer for this service. For the VDC system, see "Vehicle Dynamic Control (VDC) system" (P.5-129).**

CAUTION

- **Do not place the ignition switch is in the ON position while the steering wheel or a tire is removed.**
- **Do not turn the steering wheel as much as possible while the ignition switch is in any position other than the ON position.**
- **Installing an accessory on the steering wheel, or changing the steering wheel, may reduce the steering performance.**

Direct Adaptive Steering is designed to control the steering force and steering angle according to the vehicle speed and amount of turning of the steering wheel.

The steering characteristic can be selected using the INFINITI Drive Mode Selector. See "INFINITI Drive Mode Selector" (P.5-21).

If the VDC system is turned off, the setting of steering becomes standard mode.

If the power steering warning light illuminates while the engine is running, it may indicate that Direct Adaptive Steering is not functioning properly and may need servicing. It is recommended you have the system checked by an INFINITI retailer. (See "Power steering warning light" (P.2-16).)

When the power steering warning light illuminates with the engine running, the power assist for the steering will cease operation. You will still have control of the vehicle. However, greater steering effort will be needed, especially in sharp turns and at low speeds.

If Direct Adaptive Steering is malfunctioning, the steering wheel may turn slightly even when driving on a straight road.

Under the following conditions, the steering wheel may turn slightly even when driving on a straight road. This is due to a protection mechanism for Direct Adaptive Steering. The steering wheel will return to the normal position after the protection mechanism is deactivated.

Condition A

- When the engine is stalled or likely to be stalled
- When the steering wheel is held in the full lock position or when the front tire touches an obstruction.

- When the battery is discharged

To return the steering wheel to the normal position, stop the vehicle in a safe location and stop operating the steering wheel. Then drive the vehicle for a short period of time.

Condition B

- When the steering wheel is operated repeatedly or continuously while parking or driving at a very low speed. In this case, the power assist for the steering wheel will be reduced.

To return the steering wheel to the normal position, stop the vehicle in a safe location and wait for a period of time, without operating the steering wheel, until the temperature of Direct Adaptive Steering cools down. Avoid repeated steering wheel operations that could cause Direct Adaptive Steering to overheat.

When the vehicle is tested on the 2-wheel dynamometer, the power steering warning light may illuminate. To turn off the power steering warning light, stop the vehicle in a safe location, turn the engine off, restart the engine, and then drive the vehicle for a period of time.

The following conditions do not indicate a malfunction of Direct Adaptive Steering.

- You may notice wider steering play when the ignition switch is in the OFF or ACC position compared to when it is in the ON position.
- After the engine is started, the steering wheel may turn slightly even when driving on a straight road. To return to the normal position, drive the vehicle on a straight road for a period of time.
- After the engine is started, the steering wheel may move if the steering wheel was turned to the fully locked position while the ignition switch was in the OFF position.
- After the vehicle is tested on the 4-wheel dynamometer, the steering wheel may turn slightly even when driving on a straight road. To return the steering wheel to the normal position, drive the vehicle on a straight road for a period of time.

You may hear a noise under the following conditions. However, this is not a malfunction.

- When the engine is started or stopped.
- When the steering wheel is turned in the full lock position.

BRAKE SYSTEM

BRAKING PRECAUTIONS

The brake system has two separate hydraulic circuits. If one circuit malfunctions, you will still have braking at two wheels.

Vacuum assisted brakes

The brake booster aids braking by using engine vacuum. If the engine stops, you can stop the vehicle by depressing the brake pedal. However, greater foot pressure on the brake pedal will be required to stop the vehicle and the stopping distance will be longer.

Using the brakes

Avoid resting your foot on the brake pedal while driving. This will cause overheating of the brakes, wearing out the brake and pads faster and reduce gas mileage.

To help save the brakes and to prevent the brakes from overheating, reduce speed and downshift to a lower gear before going down a slope or long grade. Overheated brakes may reduce braking performance and could result in loss of vehicle control.

WARNING

- **While driving on a slippery surface, be careful when braking, accelerating**

or downshifting. Abrupt braking or accelerating could cause the wheels to skid and result in an accident.

- **If the engine is not running or is turned off while driving, the power assist for the brakes will not work. Braking will be harder.**

Wet brakes

When the vehicle is washed or driven through water, the brakes may get wet. As a result, your braking distance will be longer and the vehicle may pull to one side during braking.

To dry brakes, drive the vehicle at a safe speed while lightly tapping the brake pedal to heat-up the brakes. Do this until the brakes return to normal. Avoid driving the vehicle at high speeds until the brakes function correctly.

PARKING BRAKE BREAK-IN

Break in the parking brake shoes whenever the stopping effect of the parking brake is weakened or whenever the parking brake shoes and/or drums/rotors are replaced, in order to assure the best braking performance.

This procedure is described in the vehicle service manual. It is recommended you visit an INFINITI retailer for this service.

BRAKE ASSIST

BRAKE ASSIST

When the force applied to the brake pedal exceeds a certain level, the Brake Assist is activated generating greater braking force than a conventional brake booster even with light pedal force.

WARNING

The Brake Assist is only an aid to assist braking operation and is not a collision warning or avoidance device. It is the driver's responsibility to stay alert, drive safely and be in control of the vehicle at all times.

ANTI-LOCK BRAKING SYSTEM (ABS)

WARNING

- **The Anti-lock Braking System (ABS) is a sophisticated device, but it cannot prevent accidents resulting from careless or dangerous driving techniques. It can help maintain vehicle control during braking on slippery surfaces. Remember that stopping distances on slippery sur-**

faces will be longer than on normal surfaces even with ABS. Stopping distances may also be longer on rough, gravel or snow covered roads, or if you are using tire chains. Always maintain a safe distance from the vehicle in front of you. Ultimately, the driver is responsible for safety.

- **Tire type and condition may also affect braking effectiveness.**
  - **When replacing tires, install the specified size of tires on all four wheels.**
  - **When installing a spare tire, make sure that it is the proper size and type as specified on the Tire and Loading Information label. See "Tire and loading information label" (P.10-13) of this manual.**
  - **For detailed information, see "Wheels and tires" (P.8-25) of this manual.**

The Anti-lock Braking System (ABS) controls the brakes so the wheels do not lock during hard braking or when braking on slippery surfaces. The system detects the rotation speed at each wheel and varies the brake fluid pressure to prevent each wheel from locking and sliding. By preventing each wheel from locking, the system helps the driver maintain steering control and helps to minimize swerving and spinning on slippery surfaces.

Using the system

Depress the brake pedal and hold it down. Depress the brake pedal with firm steady pressure, but do not pump the brakes. The ABS will operate to prevent the wheels from locking up. Steer the vehicle to avoid obstacles.

WARNING

Do not pump the brake pedal. Doing so may result in increased stopping distances.

Self-test feature

The ABS includes electronic sensors, electric pumps, hydraulic solenoids and a computer. The computer has a built-in diagnostic feature that tests the system each time you start the engine and move the vehicle at a low speed in forward or reverse. When the self-test occurs, you may hear a "clunk" noise and/or feel a pulsation in the brake pedal. This is normal and does not indicate a malfunction. If the computer senses a malfunction, it switches the ABS off and illuminates the ABS warning light on the instrument panel. The brake system then operates normally, but without anti-lock assistance.

If the ABS warning light illuminates during the self-test or while driving, have the vehicle checked. It is recommended you visit an INFINITI retailer for this service.

Normal operation

The ABS operates at speeds above 3 to 6 MPH (5 to 10 km/h).

When the ABS senses that one or more wheels are close to locking up, the actuator rapidly applies and releases hydraulic pressure. This action is similar to pumping the brakes very quickly. You may feel a pulsation in the brake pedal and hear a noise from under the hood or feel a vibration from the actuator when it is operating. This is normal and indicates that the ABS is operating properly. However, the pulsation may indicate that road conditions are hazardous and extra care is required while driving.

VEHICLE DYNAMIC CONTROL (VDC) SYSTEM

The Vehicle Dynamic Control (VDC) system uses various sensors to monitor driver inputs and vehicle motion. Under certain driving conditions, the VDC system helps to perform the following functions.

- Controls brake pressure to reduce wheel slip on one slipping drive wheel so power is transferred to a non slipping drive wheel on the same axle.
- Controls brake pressure and engine output to reduce drive wheel slip based on vehicle speed (traction control function).
- Controls brake pressure at individual wheels and engine output to help the driver maintain control of the vehicle in the following conditions:
  - understeer (vehicle tends to not follow the steered path despite increased steering input)
  - oversteer (vehicle tends to spin due to certain road or driving conditions).

The VDC system can help the driver to maintain control of the vehicle, but it cannot prevent loss of vehicle control in all driving situations.

When the VDC system operates, the VDC warning light in the instrument panel flashes so note the following:

- The road may be slippery or the system may determine some action is required to help keep the vehicle on the steered path.
- You may feel a pulsation in the brake pedal and hear a noise or vibration from under the hood. This is normal and indicates that the VDC system is working properly.
- Adjust your speed and driving to the road conditions.

See "Vehicle Dynamic Control (VDC) warning light" (P.2-17).

If a malfunction occurs in the system, the VDC warning light illuminates in the instrument panel. The VDC system automatically turns off.

The VDC OFF switch is used to turn off the VDC system. The VDC off indicator light illuminates to indicate the VDC system is off. When the VDC switch is used to turn off the system, the VDC system still operates to prevent one drive wheel from slipping by transferring power to a non slipping drive wheel. The VDC warning light flashes if this occurs. All other VDC functions are off, except for brake force distribution, and the VDC warning light will not flash. The VDC system is automatically reset to on when the ignition switch is placed in the OFF position then back in the ON position.

See "Vehicle Dynamic Control (VDC) warning light" (P.2-17) and "Vehicle Dynamic Control (VDC) off indicator light" (P.2-19).

The computer has a built-in diagnostic feature that tests the system each time you start the engine and move the vehicle forward or in reverse at a slow speed. When the self-test occurs, you may hear a "clunk" noise and/or feel a pulsation in the brake pedal. This is normal and is not an indication of a malfunction.

VDC operation is reduced when the INFINITI Drive Mode Selector is used to select the SPORT+ mode (if so equipped). The VDC system may not operate in the same circumstances when compared to operation in the standard mode. To help prevent accidents drive carefully, avoid careless or dangerous driving techniques and be especially careful when driving and cornering on slippery surfaces.

BRAKE FORCE DISTRIBUTION

During braking while driving through turns, the system optimizes the distribution of force to each of the four wheels depending on the radius of the turn.

WARNING

- **The VDC system is designed to help the driver maintain stability but does not prevent accidents due to abrupt steering operation at high speeds or by careless or dangerous driving**

techniques. Reduce vehicle speed and be especially careful when driving and cornering on slippery surfaces and always drive carefully.

- **The brake force distribution system may not be effective depending on the driving condition. Always drive carefully and attentively.**
- **Do not modify the vehicle's suspension. If suspension parts such as shock absorbers, struts, springs, stabilizer bars, bushings and wheels are not INFINITI recommended for your vehicle or are extremely deteriorated, the VDC system may not operate properly. This could adversely affect vehicle handling performance, and the VDC warning light may illuminate.**
- **If brake related parts such as brake pads, rotors and calipers are not INFINITI recommended or are extremely deteriorated, the VDC system may not operate properly and the VDC warning light may illuminate.**
- **If engine control related parts are not INFINITI recommended or are extremely deteriorated, the VDC warning light may illuminate.**
- **When driving on extremely inclined surfaces such as higher banked corners, the VDC system may not operate properly and the VDC warning light may illuminate. Do not drive on these types of roads.**
- **When driving on an unstable surface such as a turntable, ferry, elevator or ramp, the VDC warning light may illuminate. This is not a malfunction. Restart the engine after driving onto a stable surface.**
- **If wheels or tires other than the INFINITI recommended ones are used, the VDC system may not operate properly and the VDC warning light may illuminate.**
- **The VDC system is not a substitute for winter tires or tire chains on a snow covered road.**

ACTIVE TRACE CONTROL

This system senses driving based on the driver's steering and acceleration/braking patterns, and controls brake pressure at individual wheels to help smooth vehicle response.

When the SPORT mode is selected by the INFINITI Drive Mode Selector, the amount of brake control provided by the active trace control is reduced.

When the PERSONAL mode is selected, the active trace control can be set to ON (enabled) or OFF (disabled). See "INFINITI Drive Mode Selector" (P.5-21).

When the VDC OFF switch is used to turn off the VDC system, the active trace control is also turned off.

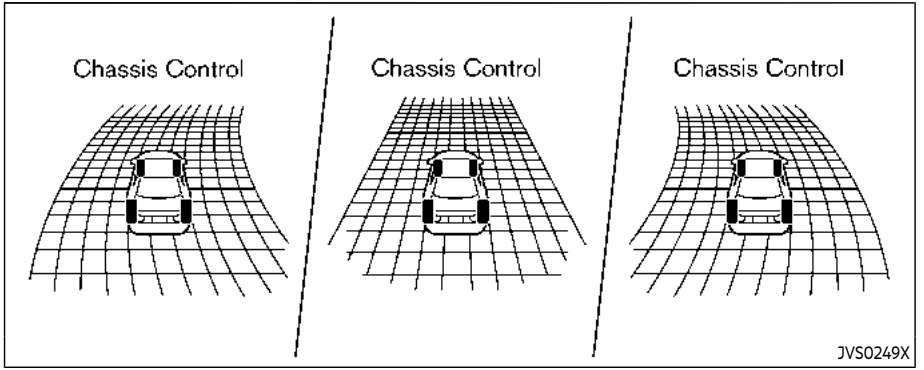

When the active trace control is operated and the "Chassis Control" mode is selected in the trip computer, the active trace control graphics are shown in the vehicle information display. (See "Trip computer" (P.2-29).)

If the chassis control warning message appears in the vehicle information display, it may indicate that the active trace control is not functioning properly. It is recommended you have the system checked by an INFINITI retailer. (See "26. Chassis control warning" (P.2-25).)

WARNING

The active trace control may not be effective depending on the driving condition. Always drive carefully and attentively.

When the active trace control is operating, you may feel a pulsation in the brake pedal and hear a noise. This is normal and indicates that the active trace control is operating properly. You may also feel deceleration when the active trace control is operating. However, this is not a malfunction.

Even if the active trace control is set to OFF, some functions will remain on to assist the driver (for example, avoidance scenes).

HILL START ASSIST SYSTEM

WARNING

- **Never rely solely on the hill start assist system to prevent the vehicle from moving backward on a hill. Always drive carefully and attentively. Depress the brake pedal when the vehicle is stopped on a steep hill. Be especially careful when stopped on a hill on frozen or muddy roads. Failure to prevent the vehicle from rolling backwards may result in a loss of control of the vehicle and possible serious injury or death.**
- **The hill start assist system is not designed to hold the vehicle at a standstill on a hill. Depress the brake pedal when the vehicle is stopped on a steep hill. Failure to do so may cause the vehicle to roll backwards and may result in a collision or serious personal injury.**
- **The hill start assist system may not prevent the vehicle from rolling backwards on a hill under all load or road conditions. Always be prepared to depress the brake pedal to prevent the vehicle from rolling backwards. Failure to do so may result in a collision or serious personal injury.**

The hill start assist system automatically keeps the brakes applied to help prevent the vehicle from rolling backwards in the time it takes the driver to release the brake pedal and apply the accelerator when the vehicle is stopped on a hill.

The hill start assist system will operate automatically under the following conditions:

- The transmission is shifted to a forward or reverse gear.
- The vehicle is stopped completely on a hill by applying the brake.

The maximum holding time is 2 seconds. After 2 seconds the vehicle will begin to roll back and the hill start assist system will stop operating completely.

The hill start assist system will not operate when the transmission is shifted to the N (Neutral) or P (Park) position or on a flat and level road.

CHASSIS CONTROL

The chassis control is an electric control module that includes the following functions:

- Log-in function (See “Log-in function” (P.3-15).)
- INFINITI Drive Mode Selector (See “INFINITI Drive Mode Selector” (P.5-21).)
- Active Lane Control (if so equipped) (See “Active Lane Control” (P.5-25).)
- Active Trace Control (See “Active trace control” (P.5-130).)

SONAR SYSTEM (if so equipped)

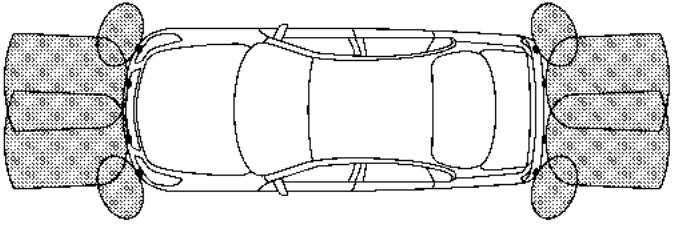

SSD0602

WARNING

- **The sonar system is a convenience but it is not a substitute for proper parking. Always look around and check that it is safe to do so before parking. Always move slowly.**
- **Read and understand the limitations of the sonar system as contained in this section. Inclement weather may affect the function of the sonar system; this may include reduced performance or a false activation.**
- **This system is not designed to prevent contact with small or moving objects.**
- **The system is designed as an aid to the driver in detecting large stationary objects to help avoid damaging the vehicle. The system will not detect small objects below the bumper, and may not detect objects that are too close to the bumper or on the ground.**
- **If your vehicle sustains damage to the bumper fascia, leaving it misaligned or bent, the sensing zone may be altered causing inaccurate measurement of obstacles or false alarms.**

CAUTION

Keep the interior of the vehicle as quiet as possible to hear the tone clearly.

The sonar system sounds a tone to warn the driver of obstacles near the bumper. When the [Auto Show Sonar Image] key is turned on in the [Parking Sonar] settings, the sonar indicator will also appear on the upper display. (See "Sonar indicator" (P.5-135).) The system detects front obstacles when the shift lever is in the D (Drive) position or N (Neutral) position. The system detects both front and rear obstacles when the shift lever is in the R (Reverse) position.

The system may not detect objects at speeds above 6 MPH (10 km/h) and may not detect certain angular or moving objects.

The sonar system detects obstacles up to 3.9 ft (1.2 m) from the bumper with a decreased coverage area at the outer corners of the bumper. Refer to the illustration for approximate zone coverage areas. As you move closer to the obstacle, the rate of the tone increases. When the obstacle is less than 11.8 in (30 cm) away, the tone will

sound continuously.

Keep the corner/center sonar (located on the bumper fascia) free from snow, ice and large accumulations of dirt (do not clean the sonar with sharp objects). If the sonar is covered, it will affect the accuracy of the sonar system.

The sensitivity level of the corner/center sonar can be adjusted (higher or lower) on the lower display.

The intermittent tone will stop in 3 seconds when an obstacle is detected by only the corner sensor and the distance does not change.

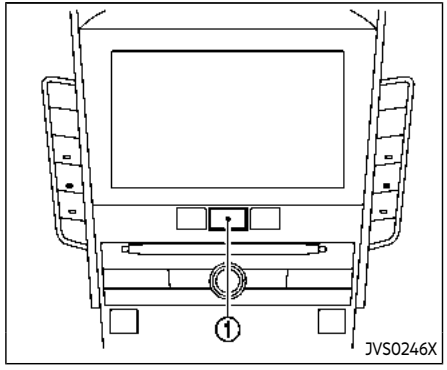

SONAR SYSTEM SETTINGS

Perform the following steps to set up the sonar function.

1. Push the MENU ① button and touch [Settings] on the lower display.
2. Touch [Parking Sonar].

For the details of the available settings, see "Turning on and off the sonar function" (P.4-25).

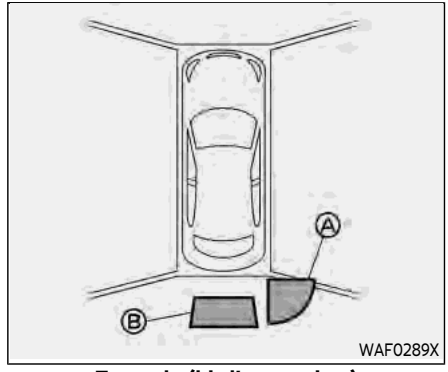

Example (bird's-eye view)

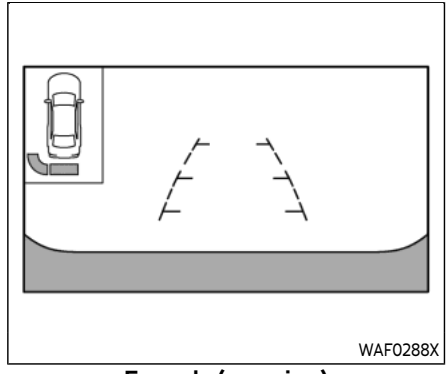

Example (rear view)

SONAR INDICATOR

When the corner of the vehicle moves closer to an object, the corner sensor indicator Ⓐ appears on the upper display.

When the center of the vehicle moves close to an object, the center sensor indicator Ⓑ appears on the upper display.

FREEING A FROZEN DOOR LOCK

To prevent a door lock from freezing, apply deicer through the key hole. If the lock becomes frozen, heat the key before inserting it into the key hole or use the Intelligent Key system.

ANTIFREEZE

In the winter when it is anticipated that the outside temperature will drop below 32°F (0°C), check antifreeze to assure proper winter protection. For additional information, see "Engine cooling system" (P.8-3) or "Intercooler cooling system" (P.8-5).

BATTERY

If the battery is not fully charged during extremely cold weather conditions, the battery fluid may freeze and damage the battery. To maintain maximum efficiency, the battery should be checked regularly. For additional information, see "Battery" (P.8-11).

DRAINING OF COOLANT WATER

If the vehicle is to be left outside without antifreeze, drain the cooling system, including the engine block. Refill before operating the vehicle. For details, see "Engine cooling system" (P.8-3).

TIRE EQUIPMENT

SUMMER tires have a tread designed to provide superior performance on dry pavement. However, the performance of these tires will be substantially reduced in snowy and icy conditions. If you operate your vehicle on snowy or icy roads, INFINITI recommends the use of MUD & SNOW or ALL SEASON tires on all four wheels. It is recommended you consult an INFINITI retailer for the tire type, size, speed rating and availability information.

For additional traction on icy roads, studded tires may be used. However, some U.S. states and Canadian provinces prohibit their use. Check local, state and provincial laws before installing studded tires.

Skid and traction capabilities of studded snow tires, on wet or dry surfaces, may be poorer than that of non-studded snow tires.

Tire chains may be used. For details, see "Tire chains" (P.8-33) of this manual.

Intelligent All-Wheel Drive (AWD) models

If you install snow tires, they must also be the same size, brand, construction and tread pattern on all four wheels.

SPECIAL WINTER EQUIPMENT

It is recommended that the following items be carried in the vehicle during winter:

- A scraper and stiff-bristled brush to remove ice and snow from the windows and wiper blades.
- A sturdy, flat board to be placed under the jack to give it firm support.
- A shovel to dig the vehicle out of snowdrifts.
- Extra window washer fluid to refill the reservoir tank.

DRIVING ON SNOW OR ICE

WARNING

- **Wet ice (32°F, 0°C and freezing rain), very cold snow or ice can be slick and very hard to drive on. The vehicle will have much less traction or "grip" under these conditions. Try to avoid driving on wet ice until the road is salted or sanded.**
- **Whatever the condition, drive with caution. Accelerate and slow down with care. If accelerating or down-shifting too fast, the drive wheels will lose even more traction.**
- **Allow more stopping distance under these conditions. Braking should be started sooner than on dry pavement.**
- **Allow greater following distances on slippery roads.**
- **Watch for slippery spots (glare ice). These may appear on an otherwise clear road in shaded areas. If a patch of ice is seen ahead, brake before reaching it. Try not to brake while on the ice, and avoid any sudden steering maneuvers.**
- **Do not use the cruise control on slippery roads.**
- **Snow can trap dangerous exhaust gases under your vehicle. Keep snow clear of the exhaust pipe and from around your vehicle.**

ENGINE BLOCK HEATER (if so equipped)

Engine block heaters are used to assist in cold temperature starting.

The engine block heater should be used when the outside temperature is 20°F (-7°C) or lower.

To use the engine block heater

1. Turn the engine off.
2. Open the hood and unwrap the engine block heater cord.
3. Plug the engine block heater cord into a grounded 3-wire, 3-pronged extension cord.
4. Plug the extension cord into a Ground Fault Interrupt (GFI) protected, grounded 110-volt AC (VAC) outlet.
5. The engine block heater must be plugged in for at least 2 - 4 hours, depending on outside temperatures, to properly warm the engine coolant. Use an appropriate timer to turn the engine block heater on.
6. Before starting the engine, unplug and properly store the cord to keep it away from moving parts.

WARNING

- **Do not use your engine block heater with an ungrounded electrical system or a 2-pronged adapter. You can be seriously injured by an electrical shock if you use an ungrounded connection.**
- **Disconnect and properly store the engine block heater cord before**

starting the engine. Damage to the cord could result in an electrical shock and can cause serious injury.

- **Use a heavy-duty 3-wire, 3-pronged extension cord rated for at least 10A. Plug the extension cord into a Ground Fault Interrupt (GFI) protected, grounded 110-VAC outlet. Failure to use the proper extension cord or a grounded outlet can result in a fire or electrical shock and cause serious personal injury.**

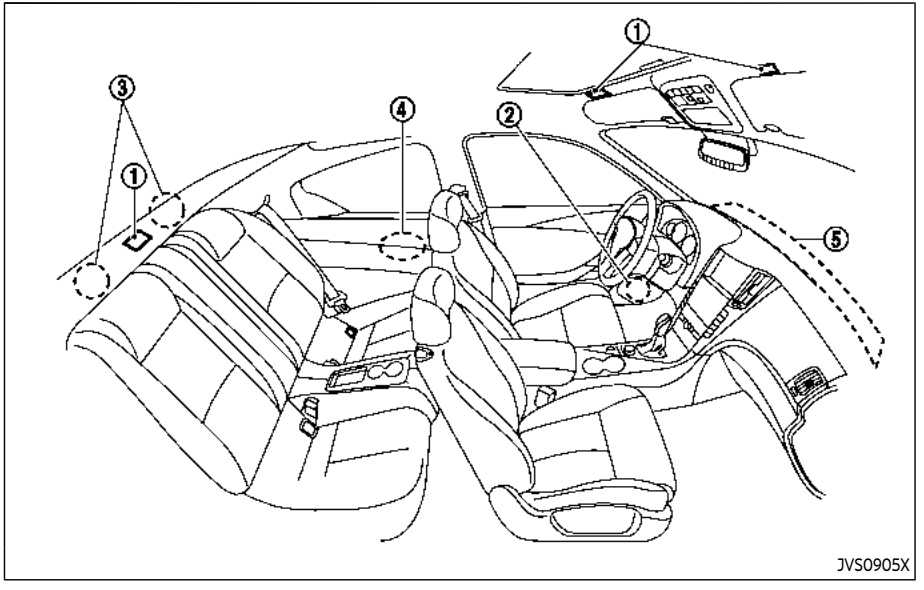

NOTE:

To operate the active noise cancellation and active sound enhancement system properly:

- Do not cover the speakers or woofer.
- Do not cover the microphones.
- Do not change or modify speakers including the woofer and any audio related parts such as the amplifier.
- Do not make any modification including sound deadening or modifications around the microphones, speakers or woofer.

ACTIVE NOISE CANCELLATION

The active noise cancellation uses microphones ① located inside the vehicle to detect engine booming noises. The system then automatically produces a muted engine booming noise through the speakers ②, ④ (if so equipped), ⑤ (if so equipped) and woofer ③ to reduce engine booming noise.

If the microphone ① or the area around it is tapped, abnormal noise may be output from the speaker.

ACTIVE SOUND ENHANCEMENT

The active sound enhancement generates sounds according to engine speed and driving modes through the speakers ② and ⑤ (if so equipped) to enhance the quality of the engine sound.

6 In case of emergency

Hazard warning flasher switch 6-2
Roadside assistance program 6-2
Emergency engine shut off 6-3
Flat tire 6-3
Tire Pressure Monitoring System (TPMS) 6-3
Run-flat tires 6-4
Repairing a flat tire (for models with emergency tire puncture repair kit) 6-5
Jump starting 6-10
Push starting 6-12
If your vehicle overheats 6-13
Towing your vehicle 6-14
Towing recommended by INFINITI 6-15
Vehicle recovery (freeing a stuck vehicle) 6-16

HAZARD WARNING FLASHER SWITCH

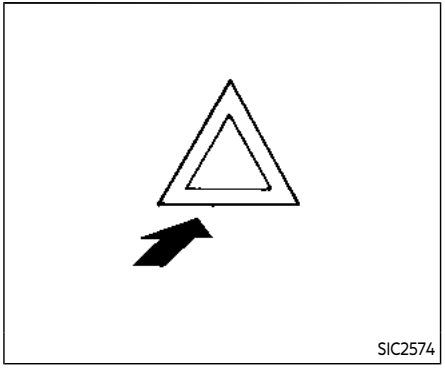

Push the switch on to warn other drivers when you must stop or park under emergency conditions. All turn signal lights will flash.

WARNING

- **If stopping for an emergency, be sure to move the vehicle well off the road.**
- **Do not use the hazard warning flashers while moving on the highway unless unusual circumstances force you to drive so slowly that your vehicle might become a hazard to other traffic.**
- **Turn signals do not work when the hazard warning flasher lights are on.**

The flasher can be actuated with the ignition switch in any position.

When an impact that could activate the supplemental air bags is detected, the hazard warning flasher lights blink automatically. If the hazard warning flasher switch is pushed, the hazard warning flashers will turn off.

WARNING

Do not turn the hazard warning flasher switch to off until you can make sure that it is safe to do so. Also, the hazard flasher warning may not blink automatically depending on the force of impact.

Some state laws may prohibit the use of the hazard warning flasher switch while driving.

ROADSIDE ASSISTANCE PROGRAM

In the event of a roadside emergency, Roadside Assistance Service is available to you. Please refer to your Warranty Information Booklet (U.S.) or Warranty & Roadside Assistance Information Booklet (Canada) for details.

EMERGENCY ENGINE SHUT OFF

To shut off the engine in an emergency situation while driving, perform the following procedure:

- Rapidly push the push-button ignition switch 3 consecutive times in less than 1.5 seconds, or
- Push and hold the push-button ignition switch for more than 2 seconds.

FLAT TIRE

If you have a flat tire, follow the instructions in this section.

For models with run-flat tires, you can continue driving to a safe location even if they are punctured. (See "Run-flat tires" (P.6-4) and "Run-flat tires" (P.8-31).)

TIRE PRESSURE MONITORING SYSTEM (TPMS)

This vehicle is equipped with the Tire Pressure Monitoring System (TPMS). It monitors tire pressure of all tires except the spare. When the low tire pressure warning light is lit and the "Tire Pressure Low - Add Air" warning appears in the vehicle information display, one or more of your tires is significantly under-inflated. If the vehicle is being driven with low tire pressure, the TPMS will activate and warn you of it by the low tire pressure warning light. This system will activate only when the vehicle is driven at speeds above 16 MPH (25 km/h). For more details, see "Warning lights, indicator lights and audible reminders" (P.2-12) and "Tire Pressure Monitoring System (TPMS)" (P.5-5).

WARNING

- **Radio waves could adversely affect electric medical equipment. Those who use a pacemaker should contact the electric medical equipment manufacturer for the possible influences before use.**
- **If the low tire pressure warning light illuminates while driving, avoid sudden steering maneuvers or abrupt braking, reduce vehicle speed, pull off the road to a safe location and stop the vehicle as soon as possible. Driving with under-inflated tires may permanently damage the tires and increase the likelihood of tire failure. Serious vehicle damage could occur and may lead to an accident and could result in serious personal injury. Check the tire pressure for all four tires. Adjust the tire pressure to the recommended COLD tire pressure shown on the Tire and Loading Information label to turn the low tire pressure warning light OFF. If the light still illuminates while driving after adjusting the tire pressure, a tire may be flat. If you have a flat tire, replace it with a spare tire (if so equipped) or repair it with the emergency tire puncture repair kit (if so equipped) as soon as possible. If no tire is flat and all tires are properly inflated, it is recommended you consult an INFINITI retailer.**

- **Since the spare tire is not equipped with the TPMS, when a spare tire is mounted or a wheel is replaced, the TPMS will not function and the low tire pressure warning light will flash for approximately 1 minute. The light will remain on after 1 minute. Have your tires replaced and/or TPMS system reset as soon as possible. It is recommended you visit an INFINITI retailer for these services.**
- **Replacing tires with those not originally specified by INFINITI could affect the proper operation of the TPMS.**
- **Do not inject any tire liquid or aerosol tire sealant into the tires, as this may cause a malfunction of the tire pressure sensors.**
- **INFINITI recommends using only Genuine NISSAN Emergency Tire Sealant provided with your vehicle. Other tire sealants may damage the valve stem seal which can cause the tire to lose air pressure. It is recommended you visit an INFINITI retailer as soon as possible after using tire repair sealant (for models equipped with the emergency tire puncture repair kit).**

RUN-FLAT TIRES

Run-flat tires are those tires that can be used temporarily if they are punctured. See "Run-flat tires" (P.8-31).

Also, refer to "Important Tire Safety Information" (US) or "Tire Safety Information" (Canada) in the INFINITI Warranty Information Booklet.

WARNING

- **Although you can continue driving with a punctured run-flat tire, remember that vehicle handling stability is reduced, which could lead to an accident and personal injury. Also, driving a long distance at high speeds may damage the tires.**
- **Do not drive at speeds above 50 MPH (80 km/h) and do not drive more than approximately 93 miles (150 km) with a punctured run-flat tire. The actual distance the vehicle can be driven on a flat tire depends on outside temperature, vehicle load, road conditions and other factors.**
- **Drive safely at reduced speeds. Avoid hard cornering or braking, which may cause you to lose control of the vehicle.**
- **If you detect any unusual sounds or vibrations while driving with a punctured run-flat tire, pull off the road to a safe location and stop the vehicle as soon as possible. The tire may be seriously damaged and need to be replaced.**

CAUTION

- **Never install tire chains on a punctured run-flat tire, as this could damage your vehicle.**
- **Avoid driving over any projection or pothole, as the clearance between the vehicle and the ground is smaller than normal.**
- **Do not enter an automated car wash with a punctured run-flat tire.**
- **It is recommended you have the punctured tire inspected by an INFINITI retailer or other authorized repair shop. Replace the tire as soon as possible if the tire is seriously damaged.**

If you have a flat tire and have to stop the vehicle, follow the instructions below.

1. Safely move the vehicle off the road and away from traffic.
2. Turn on the hazard warning flashers.
3. Park on a level surface and apply the parking brake. Move the shift lever to the P (Park) position.
4. Turn off the engine.
5. Raise the hood to warn other traffic, and to signal professional road assistance personnel that you need assistance.
6. Have all passengers get out of the vehicle and stand in a safe place, away from traffic and clear of the vehicle.

For the tire removing procedure, see "Jacking up the vehicle and replacing tires" (P.8-37).

REPAIRING A FLAT TIRE (for models with emergency tire puncture repair kit)

WARNING

- **After using Emergency Tire Sealant to repair a minor tire puncture, do not drive the vehicle at speeds faster than 50 MPH (80 km/h).**
- **Immediately after using the Emergency Tire Sealant to repair a minor tire puncture, take your vehicle to inspect, and repair or replace the tire. It is recommended you visit an INFINITI retailer for this service. The Emergency Tire Sealant cannot permanently seal a punctured tire. Continuing operation of the vehicle without a permanent tire repair can lead to a crash.**
- **INFINITI recommends using only Genuine NISSAN Emergency Tire Sealant provided with your vehicle. Other tire sealants may damage the valve stem seal which can cause the tire to lose air pressure. It is recommended you visit an INFINITI retailer as soon as possible after using tire repair sealant.**

This vehicle does not have a spare tire. The emergency tire puncture repair kit (Emergency Tire Sealant) is supplied with the vehicle instead of a spare tire. It can be used to temporarily repair minor tire punctures.

If you have a flat tire, follow the instructions below.

CAUTION

- **To avoid the emergency tire puncture repair kit being damaged during storage or use:**
  - **Only use the emergency tire puncture repair kit on your vehicle. Do not use it on other vehicles.**
  - **Only use the kit to inflate the tires of your vehicle and to check the vehicle's tire pressure.**
  - **Only plug the compressor into a 12V DC car power point.**
  - **Keep the kit free of water and dirt.**
  - **Do not disassemble or modify the kit.**
  - **Do not drop the kit or allow hard impacts to the kit.**
- **Do not use the emergency tire puncture repair kit under the following conditions. It is recommended you visit an INFINITI retailer or professional road assistance.**
  - **when the sealant has passed its expiration date (shown on the label attached to the bottle)**

- **when the cut or the puncture is approximately 0.25 in (6 mm) or longer**
- **when the tire sidewall is damaged**
- **when the vehicle has been driven with extremely low tire pressure**
- **when the tire has come off the inside or the outside of the wheel.**
- **when the tire wheel is damaged**
- **when two or more tires are flat**

Stopping the vehicle

1. Safely move the vehicle off the road and away from traffic.
2. Turn on the hazard warning flashers.
3. Park on a level surface and apply the parking brake.
4. Move the shift lever to the P (Park) position.
5. Turn off the engine.
6. Raise the hood to warn other traffic and to signal professional road assistance personnel that you need assistance.
7. Have all passengers get out of the vehicle and stand in a safe place, away from traffic and clear of the vehicle.

WARNING

- **Make sure the parking brake is securely applied and the transmission is shifted into P (Park).**
- **Never repair tires when the vehicle is on a slope, ice or slippery areas. This is hazardous.**
- **Never repair tires if oncoming traffic is close to your vehicle. Wait for professional road assistance.**

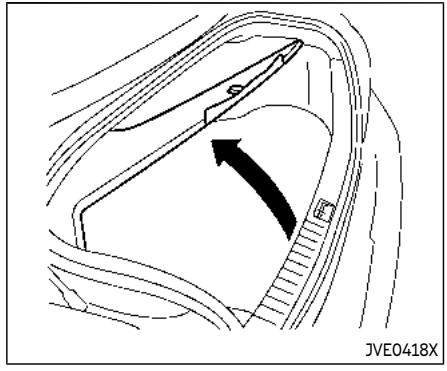

Getting emergency tire puncture repair kit

Raise the trunk floor cover. (While pulling up the center strap, fold down the right end of the trunk floor cover to pull up the trunk floor cover.) Take out the emergency tire puncture repair kit located in the trunk.

The emergency tire puncture repair kit consists of the following items:

- Tire sealant bottle
- Air compressor
- Speed restriction sticker

Before using emergency tire puncture repair kit

- If any foreign object (for example, a screw or nail) is embedded in the tire, do not remove it.
- Check the expiration date of the sealant (shown on the label attached to the bottle). Never use a sealant whose expiration date has passed.

Repairing tire

WARNING

Observe the following precautions when using the tire repair compound.

- **Swallowing the compound is dangerous. Immediately drink as much water as possible and seek prompt medical assistance.**
- **Rinse well with lots of water if the compound comes into contact with skin or eyes. If irritation persists, seek prompt medical attention.**
- **Keep the repair compound out of the reach of children.**

NOTE:

Do not remove any nails or screws that have penetrated the tire when performing repairs.

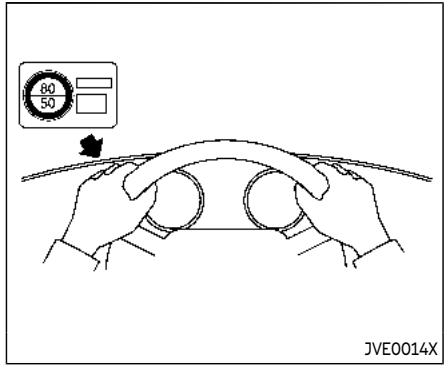

1. Take out the speed restriction sticker from the air compressor*, then put it in a location where the driver can see it while driving.

   *: The compressor shape may differ depending on the models.

CAUTION

Do not put the speed restriction label on the steering wheel pad, the speedometer or the warning light locations.

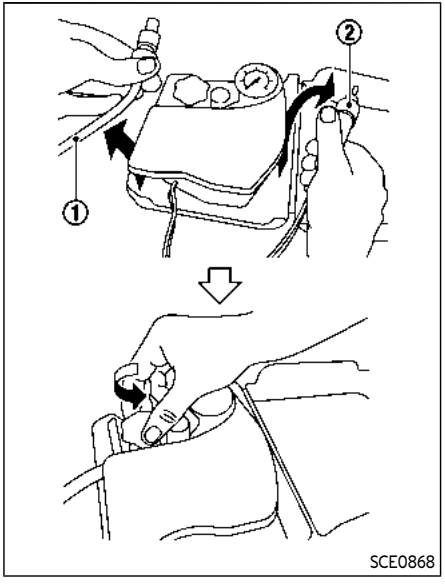

2. Take the hose ① and the power plug ② out of the air compressor. Remove the cap of the bottle holder from the air compressor.

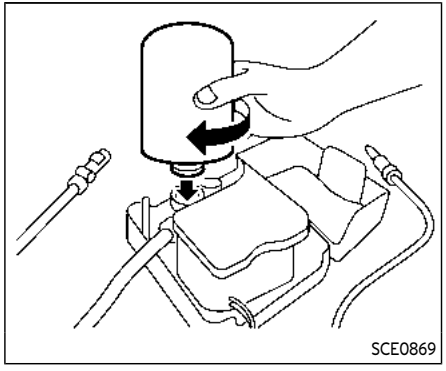

3. Remove the cap from the tire sealant bottle, and screw the bottle clockwise onto the bottle holder. (Leave the bottle seal intact. Screwing the bottle onto the bottle holder will pierce the seal of the bottle.)
4. Remove the cap from the tire valve on the flat tire.

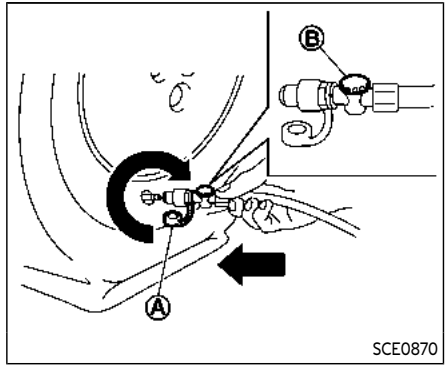

5. Remove the protective cap Ⓐ of the hose and screw the hose securely onto the tire valve. Make sure that the pressure release valve Ⓑ is securely tightened. Make sure that the air compressor switch is in the OFF (○) position, and then insert its power plug into the power outlet in the vehicle.

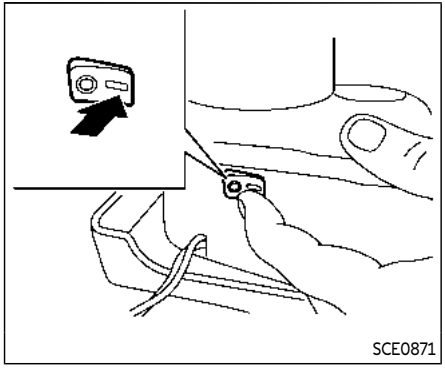

6. Push the ignition switch to the "ACC" position. Then turn the compressor switch to the ON (-) position and inflate the tire up to the pressure that is specified on the tire and loading information label affixed to the driver's side pillar if possible, or to the minimum of 26 psi (180 kPa). Turn the air compressor off briefly in order to check the tire pressure with the pressure gauge.

   If the tire is inflated to higher than the specified pressure, lower the tire pressure by releasing air with the pressure release valve.

NOTE:
The compressor tire pressure gauge may show a pressure reading of 87 psi (600 kPa) for about 30 seconds while inflating the tire. The pressure gauge is indicating the pressure inside the sealant can. When the sealant has been injected into the tire the pressure gauge will drop and indicate actual tire pressure.

WARNING

- **To avoid serious personal injury while using the emergency tire puncture repair kit:**
  - **Securely tighten the compressor hose to the tire valve. Failure to do so can cause the sealant to spray into the air and get into your eyes or on the skin.**
- **Do not stand directly beside the damaged tire while it is being inflated because of the risk of the rupture. If there are any cracks or bumps, turn the compressor off immediately.**

If the tire pressure does not increase to **26 psi (180 kPa) within 10 minutes**, the tire may be seriously damaged and **the tire cannot be repaired with this tire puncture repair kit.** It is recommended you visit an INFINITI retailer for servicing.

7. When the tire pressure is at the specified amount, turn the air compressor off. If the pressure cannot be inflated to the specified amount, the air compressor can be turned off at the minimum of 26 psi (180 kPa). Remove the power plug from the power outlet and quickly remove the hose from the tire valve. Attach the protective cap and valve cap. Properly stow the emergency tire puncture repair kit in the trunk.

CAUTION

To avoid serious personal injury when stowing the emergency tire puncture repair kit:

- **Keep the sealant bottle screwed into the compressor. Failure to do so can cause the sealant to spray into the air and get into your eyes or on the skin.**

8. Immediately drive the vehicle for 10 minutes or 2 miles (3 km) at a speed of 50 MPH (80 km/h) or less.
9. After driving, make sure that the air compressor switch is in the OFF (○)

position, then screw the hose securely onto the tire valve. Check the tire pressure with the pressure gauge. The temporary repair is completed if the tire pressure does not drop.

Make sure the pressure is adjusted to the pressure that is specified on the tire and loading information label before driving.

10. If the tire pressure drops, repeat the steps from 5 to 9. If the pressure drops again or under 19 psi (130 kPa), **the tire cannot be repaired with this tire puncture repair kit.** It is recommended you visit an INFINITI retailer for this servicing.

    The sealant bottle and hose cannot be reused to repair another punctured tire. It is recommended you visit an INFINITI retailer to purchase replacements.

After repairing tire

It is recommended you visit an INFINITI retailer for tire repair/replacement as soon as possible.

WARNING

- **After using Emergency Tire Sealant to repair a minor tire puncture, do not drive the vehicle at speeds faster than 50 MPH (80 km/h).**
- **Immediately after using Emergency Tire Sealant to repair a minor tire puncture, take your vehicle to inspect, and repair or replace the tire. It is recommended you visit an INFINITI retailer for this service. The Emergency Tire Sealant cannot permanently seal a punctured tire. Continuing operation of the vehicle without a permanent tire repair can lead to a crash.**
- **INFINITI recommends using only Genuine NISSAN Emergency Tire Sealant provided with your vehicle. Other tire sealants may damage the valve stem seal which can cause the tire to lose air pressure. It is recommended you visit an INFINITI retailer as soon as possible after using tire repair sealant.**

JUMP STARTING

To start your engine with a booster battery, the instructions and precautions below must be followed.

WARNING

- **If done incorrectly, jump starting can lead to a battery explosion, resulting in severe injury or death. It could also damage your vehicle.**
- **Explosive hydrogen gas is always present in the vicinity of the battery. Keep all sparks and flames away from the battery.**
- **Do not allow battery fluid to come into contact with eyes, skin, clothing or painted surfaces. Battery fluid is a corrosive sulphuric acid solution which can cause severe burns. If the fluid should come into contact with anything, immediately flush the contacted area with water.**
- **Keep the battery out of the reach of children.**
- **The booster battery must be rated at 12 volts. Use of an improperly rated battery can damage your vehicle.**
- **Whenever working on or near a battery, always wear suitable eye protectors (for example, goggles or**

industrial safety spectacles) and remove rings, metal bands, or any other jewelry. Do not lean over the battery when jump starting.

- **Do not attempt to jump start a frozen battery. It could explode and cause serious injury.**
- **Your vehicle has an automatic engine cooling fan. It could come on at any time. Keep hands and other objects away from it.**

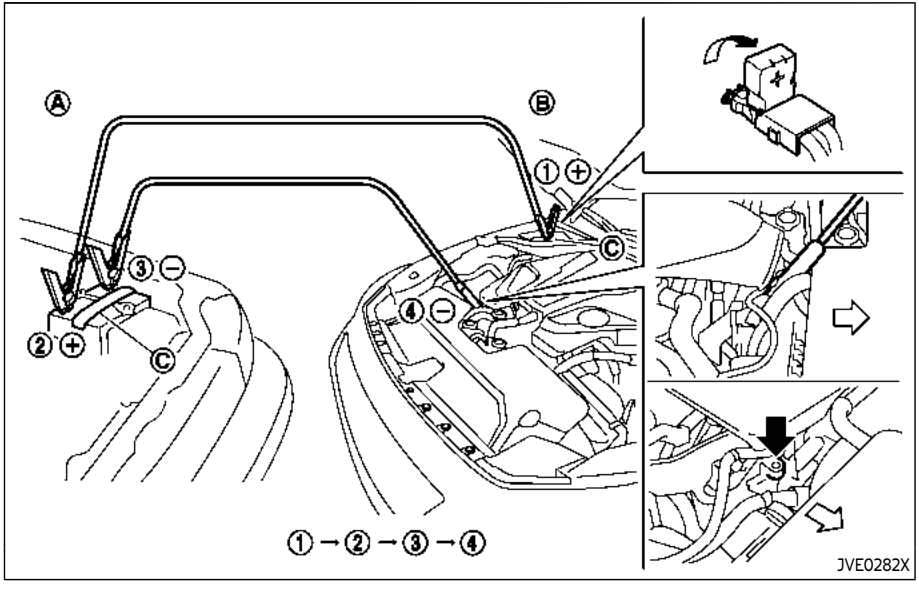

WARNING

Always follow the instructions below. Failure to do so could result in damage to the charging system and cause personal injury.

1. If the booster battery is in another vehicle Ⓐ, position the two vehicles Ⓐ and Ⓑ to bring the batteries into close proximity to each other.

CAUTION

- **Do not allow the two vehicles to touch.**

2. Apply parking brake. Move the shift lever to the P (Park) position. Switch off all unnecessary electrical systems (light, heater, air conditioner, etc.).
3. Remove vent caps on the battery (if so equipped). Cover the battery with a firmly wrung out moist cloth Ⓒ to reduce explosion hazard.
4. Connect jumper cables in the sequence as illustrated (① → ② → ③ → ④).

CAUTION

- **Always connect positive (+) to positive (+) and negative (-) to body ground (as illustrated) - not to the battery.**
- **Make sure the jumper cables do not touch moving parts in the engine compartment and that clamps do not contact any other metal.**

5. Start the engine of the booster vehicle Ⓐ and let it run for a few minutes.
6. Keep the engine speed of the booster vehicle Ⓐ at about 2,000 rpm, and start the engine of the vehicle being jump started Ⓑ.

CAUTION

Do not keep the starter motor engaged for more than 10 seconds. If the engine does not start right away, push the ignition switch to the OFF position and wait 10 seconds before trying again.

7. After starting your engine, carefully disconnect the negative cable and then the positive cable (④ → ③ → ② → ①).
8. Replace the vent caps (if so equipped). Be sure to dispose of the cloth used to cover the vent holes as it may be contaminated with corrosive acid.
9. Put the battery cover and the engine cover back to the original location.

PUSH STARTING

Do not attempt to start the engine by pushing.

CAUTION

- **Automatic Transmission (AT) models cannot be push-started or tow-started. Attempting to do so may cause transmission damage.**
- **Three-way catalyst equipped models should not be started by pushing since the three-way catalyst may be damaged.**
- **Never try to start the vehicle by towing it; when the engine starts, the forward surge could cause the vehicle to collide with the tow vehicle.**

IF YOUR VEHICLE OVERHEATS

CAUTION

- **Do not continue to drive if your vehicle overheats. Doing so could cause engine damage or a vehicle fire.**
- **To avoid the danger of being scalded, never remove the radiator cap while the engine is still hot. When the radiator cap is removed, pressurized hot water will spurt out, possibly causing serious injury.**
- **Do not open the hood if steam is coming out.**

If your vehicle is overheating (indicated by an extremely high temperature gauge reading), or if you feel a lack of engine power, detect abnormal noise, etc., take the following steps:

1. Move the vehicle safely off the road, apply the parking brake and move the shift lever to the P (Park) position.

   Do not stop the engine.
2. Turn off the climate control. Open all the windows, move the heater or air conditioner temperature control to maximum hot and fan control to high speed.
3. If engine overheating is caused by climbing a long hill on a hot day, run the engine at a fast idle (approximately 1,500 rpm) until the temperature gauge indication returns to normal.
4. Get out of the vehicle. Look and listen for steam or coolant escaping from the radiator before opening the hood. (If steam or coolant is escaping, turn off the engine.) Do not open the hood further until no steam or coolant can be seen.
5. Open the engine hood.

WARNING

If steam or water is coming from the engine, stand clear to prevent getting burned.

6. Visually check drive belts for damage or looseness. Also check if the cooling fan is running. The radiator hoses and radiator should not leak water. If coolant is leaking or the cooling fan does not run, stop the engine.

WARNING

Be careful not to allow your hands, hair, jewelry or clothing to come into contact with, or get caught in, engine belts or the engine cooling fan. The engine cooling fan can start at any time.

7. After the engine cools down, check the coolant level in the reservoir tank with the engine running. Add coolant to the reservoir tank if necessary. Have your vehicle repaired. It is recommended you visit an INFINITI retailer for this service.

TOWING YOUR VEHICLE

When towing your vehicle, all State (Provincial in Canada) and local regulations for towing must be followed. Incorrect towing equipment could damage your vehicle. Towing instructions are available from an INFINITI retailer. Local service operators are familiar with the applicable laws and procedures for towing. To assure proper towing and to prevent accidental damage to your vehicle, INFINITI recommends that you have a service operator tow your vehicle. It is advisable to have the service operator carefully read the following precautions.

WARNING

- **Never ride in a vehicle that is being towed.**
- **Never get under your vehicle after it has been lifted by a tow truck.**

CAUTION

- **When towing, make sure that the transmission, axles, steering system and powertrain are in working condition. If any unit is damaged, dollies must be used.**
- **Always attach safety chains before towing.**

For information about towing your vehicle behind a recreational vehicle (RV), see “Flat towing” (P.10-18) of this manual.

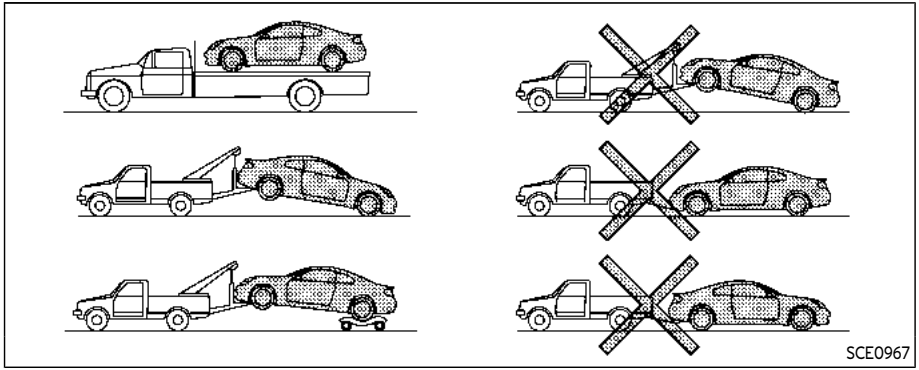

Two-Wheel Drive (2WD) models

TOWING RECOMMENDED BY INFINITI

Two-Wheel Drive (2WD) models

INFINITI recommends that your vehicle be towed with the driving (rear) wheels off the ground or place the vehicle on a flat bed truck as illustrated.

CAUTION

- **Never tow automatic transmission models with the rear wheels on the ground or four wheels on the ground (forward or backward), as this may cause serious and expensive damage to the transmission. If it is necessary to tow the vehicle with the front wheels raised, always use towing dollies under the rear wheels.**
- **When towing rear wheel drive models with the front wheels on the ground or on towing dollies: Place the ignition switch in the ACC or ON position, and secure the steering wheel in a straight-ahead position with a rope or similar device.**

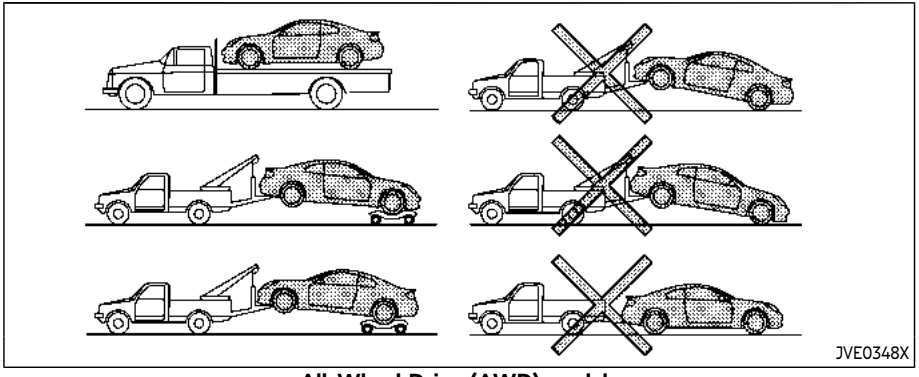

All-Wheel Drive (AWD) models

Intelligent All-Wheel Drive (AWD) models

INFINITI recommends that towing dollies be used when towing your vehicle or the vehicle be placed on a flat bed truck as illustrated.

CAUTION

Never tow Intelligent AWD models with any of the wheels on the ground as this may cause serious and expensive damage to the powertrain.

VEHICLE RECOVERY (freeing a stuck vehicle)

WARNING

To avoid vehicle damage, serious personal injury or death when recovering a stuck vehicle:

- **Contact a professional towing service to recover the vehicle if you have any questions regarding the recovery procedure.**
- **Tow chains or cables must be attached only to main structural members of the vehicle.**
- **Do not use the vehicle tie-downs to tow or free a stuck vehicle.**
- **Only use devices specifically designed for vehicle recovery and follow the manufacturer's instructions.**
- **Always pull the recovery device straight out from the front of the vehicle. Never pull at an angle.**
- **Route recovery devices so they do not touch any part of the vehicle except the attachment point.**

If your vehicle is stuck in sand, snow, mud, etc., use a tow strap or other device

designed specifically for vehicle recovery. Always follow the manufacturer's instructions for the recovery device.

Rocking a stuck vehicle

If your vehicle is stuck in sand, snow, mud, etc., use the following procedure:

1. Turn off the Vehicle Dynamic Control (VDC) system.
2. Make sure the area in front and behind the vehicle is clear of obstructions.
3. Turn the steering wheel right and left to clear an area around the front tires.
4. Slowly rock the vehicle forward and backward.
   - Shift back and forth between R (Reverse) and D (Drive).
   - Apply the accelerator as little as possible to maintain the rocking motion.
   - Release the accelerator pedal before shifting between R and D.
   - Do not spin the tires above 35 MPH (55 km/h).
5. If the vehicle cannot be freed after a few tries, contact a professional towing service to remove the vehicle.

WARNING

- **Stand clear of a stuck vehicle.**
- **Do not spin your tires at high speed. This could cause them to explode and result in serious injury. Parts of your vehicle could also overheat and be damaged.**

MEMO

7 Appearance and care

Cleaning exterior 7-2
Washing 7-2
Waxing 7-2
Removing spots 7-3
Underbody 7-3
Glass 7-3
Wheels 7-3
Chrome parts 7-4
Tire dressing 7-4
Cleaning interior 7-5
Leather cleaning kit (if so equipped) 7-5
Air fresheners 7-5
Floor mats 7-6
Seat belts 7-7
Corrosion protection 7-8
Most common factors contributing to vehicle corrosion 7-8
Environmental factors influence the rate of corrosion 7-8
To protect your vehicle from corrosion 7-8

CLEANING EXTERIOR

In order to maintain the appearance of your vehicle, it is important to take proper care of it.

To protect the paint surface, wash your vehicle as soon as you can:

- after a rainfall to prevent possible damage from acid rain
- after driving on coastal roads
- when contaminants such as soot, bird droppings, tree sap, metal particles or bugs get on the paint surface
- when dust or mud builds up on the surface

Whenever possible, store or park your vehicle inside a garage or in a covered area.

When it is necessary to park outside, park in a shady area or protect the vehicle with a body cover.

Be careful not to scratch the paint surface when putting on or removing the body cover.

WASHING

Wash dirt off the vehicle with a wet sponge and plenty of water. Clean the vehicle thoroughly using a mild soap, a special vehicle soap or general purpose dishwashing liquid mixed with clean, lukewarm (never hot) water.

CAUTION

- **Do not use car washes that use acid in the detergent. Some car washes, especially brushless ones, use some acid for cleaning. The acid may react with some plastic vehicle components, causing them to crack. This could affect their appearance, and also could cause them not to function properly. Always check with your car wash to confirm that acid is not used.**
- **Do not wash the vehicle with strong household soap, strong chemical detergents, gasoline or solvents.**
- **Do not wash the vehicle in direct sunlight or while the vehicle body is hot, as the surface may become water-spotted.**
- **Avoid using tight-napped or rough cloths, such as washing mitts. Care must be taken when removing caked-on dirt or other foreign substances so the paint surface is not scratched or damaged.**

Rinse the vehicle again with plenty of clean water.

Inside flanges, seams and folds on the doors, hatches and hood are particularly vulnerable to the effects of road salt. Therefore, these areas must be regularly cleaned. Make sure that the drain holes in the lower edge of the door are open. Spray water under the body and in the wheel wells to loosen the dirt and wash away road salt.

Avoid leaving water spots on the paint surface by using a damp chamois to dry the vehicle.

WAXING

Regular waxing protects the paint surface and helps retain new vehicle appearance. Polishing is recommended to remove built-up wax residue and to avoid a weathered appearance before reapplying wax.

An INFINITI retailer can assist you in choosing the proper product.

- Wax your vehicle only after a thorough washing. Follow the instructions supplied with the wax.

- Do not use a wax containing any abrasives, cutting compounds or cleaners that may damage the vehicle finish.

Machine compound or aggressive polishing on a base coat/clear coat paint finish may dull the finish or leave swirl marks.

REMOVING SPOTS

Remove tar and oil spots, industrial dust, insects, and tree sap as quickly as possible from the paint surface to avoid lasting damage or staining. Special cleaning products are available at an INFINITI retailer or any automotive accessory stores.

UNDERBODY

In areas where road salt is used in winter, the underbody must be cleaned regularly. This will prevent dirt and salt from building up and causing the acceleration of corrosion on the underbody and suspension. Before the winter period and again in the spring, the underseal must be checked and, if necessary, re-treated.

GLASS

Use glass cleaner to remove smoke and dust film from the glass surfaces. It is normal for glass to become coated with a film after the vehicle is parked in the hot sun. Glass cleaner and a soft cloth will easily remove this film.

CAUTION

When cleaning the inside of the windows, do not use sharp-edged tools, abrasive cleaners or chlorine-based disinfectant cleaners. They could damage the electrical conductors, radio antenna elements or rear window defroster elements.

WHEELS

Wash the wheels when washing the vehicle to maintain their appearance.

- Clean the inner side of the wheels when the wheel is changed or the underside of the vehicle is washed.
- Inspect wheel rims regularly for dents or corrosion. Such damage may cause loss of pressure or poor seal at the tire bead.
- INFINITI recommends that the road wheels be waxed to protect against road salt in areas where it is used during winter.

CAUTION

Do not use abrasive cleaners when washing the wheels.

Aluminum alloy wheels

Wash regularly with a sponge dampened in a mild soap solution, especially during winter months in areas where road salt is used. Salt could discolor the wheels if not removed.

CAUTION

Follow the directions below to avoid staining or discoloring the wheels:

- **Do not use a cleaner that uses strong acid or alkali contents to clean the wheels.**
- **Do not apply wheel cleaners to the wheels when they are hot. The wheel temperature should be the same as ambient temperature.**
- **Rinse the wheel to completely remove the cleaner within 15 minutes after the cleaner is applied.**

Bright wheels (if so equipped)

The bright wheels use a different coating process than typical aluminum alloy wheel and they are not plated wheels. These wheels are clear-coated and require the following special cleaning. They should be regularly washed with a soft sponge soaked in a lot of water. After washing with water, wipe clean with a dry, soft cloth and dry completely. When there is chemical or tire wax, or dirt such as an antifreeze agent on the surface, wash them with water as soon as possible.

CAUTION

- **The surfaces of the wheels use a different coating process than typical aluminum alloy wheels. Do not use aluminum alloy wheel cleaners or abrasive cleaners to clean the wheels. Using such cleaners could damage the wheel surfaces.**
- **Do not use an automatic car wash if the vehicle is equipped with bright wheels. The wheel coating may be damaged.**
- **Do not use a brush to wash the wheels if the vehicle is equipped with bright wheels. The wheel coating may be damaged.**

CHROME PARTS

Clean chrome parts regularly with a non-abrasive chrome polish to maintain the finish.

TIRE DRESSING

INFINITI does not recommend the use of tire dressings. Tire manufacturers apply a coating to the tires to help reduce discoloration of the rubber. If a tire dressing is applied to the tires, it may react with the coating and form a compound. This compound may come off the tire while driving and stain the vehicle paint.

If you choose to use a tire dressing, take the following precautions:

- Use a water-based tire dressing. The coating on the tire dissolves more easily with an oil-based tire dressing.
- Apply a light coat of tire dressing to help prevent it from entering the tire tread/grooves (where it would be difficult to remove).
- Wipe off excess tire dressing using a dry towel. Make sure the tire dressing is completely removed from the tire tread/grooves.
- Allow the tire dressing to dry as recommended by tire dressing manufacturer.

CLEANING INTERIOR

Occasionally remove loose dust from the interior trim, plastic parts and seats using a vacuum cleaner or soft bristled brush. Wipe the vinyl and leather surfaces with a clean, soft cloth dampened in mild soap solution, then wipe clean with a dry soft cloth.

Regular care and cleaning is required in order to maintain the appearance of the leather.

Before using any fabric protector, read the manufacturer's recommendations. Some fabric protectors contain chemicals that may stain or bleach the seat material.

Use a cloth dampened only with water, to clean the meter and gauge lens.

WARNING

Do not use water or acidic cleaners (hot steam cleaners) on the seat. This can damage the seat or occupant classification sensors. This can also affect the operation of the air bag system and result in serious personal injury.

CAUTION

- **Never use benzine, thinner, or any similar material.**
- **For cleaning, use a soft cloth, dampened with water. Never use a rough cloth, alcohol, benzine, thinner or any kind of solvent or paper towel with a chemical cleaning agent. They will scratch or cause discoloration to the lens.**
- **Do not spray any liquid such as water on the meter lens. Spraying liquid may cause the system to malfunction.**
- **Small dirt particles can be abrasive and damaging to the leather surfaces and should be removed promptly. Do not use saddle soap, car waxes, polishes, oils, cleaning fluids, solvents, detergents or ammonia-based cleaners as they may damage the leather's natural finish.**
- **Only use fabric protectors approved by INFINITI.**
- **Do not use glass or plastic cleaner on meter or gauge lens covers. It may damage the lens cover.**

LEATHER CLEANING KIT (if so equipped)

Spray onto the leather cleaning cloth, then gently wipe the surface of leather. Use a dry towel to absorb any excess moisture.

Clean light-colored leather more frequently because soiling on such surfaces is much more visible.

Always follow the manufacturer's instructions supplied with the leather cleaning kit.

You can obtain the leather cleaning kit from an INFINITI retailer or other authorized repair shop.

CAUTION

Do not leave the leather cleaning kit inside the vehicle. The leather cleaning kit left in a closed vehicle can become very hot.

AIR FRESHENERS

Most air fresheners use a solvent that could affect the vehicle interior. If you use an air freshener, take the following precautions:

- Hanging-type air fresheners can cause permanent discoloration when they contact vehicle interior surfaces. Place the

air freshener in a location that allows it to hang free and not contact an interior surface.

- Liquid-type air fresheners typically clip on the vents. These products can cause immediate damage and discoloration when spilled on interior surfaces.

Carefully read and follow the manufacturer's instructions before using air fresheners.

FLOOR MATS

WARNING

To avoid potential pedal interference that may result in a collision, injury or death:

- **NEVER place a floor mat on top of another floor mat in the driver front position or install them upside down or backwards.**
- **Use only genuine INFINITI floor mats or equivalent floor mats that are specifically designed for use in your vehicle model and model year.**
- **Properly position the mats in the floorwell using the floor mat positioning hook. See "Floor mat installation" (P.7-6).**
- **Make sure the floor mat does not interfere with pedal operation.**
- **Periodically check the floor mats to make sure they are properly installed.**
- **After cleaning the vehicle interior, check the floor mats to make sure they are properly installed.**

The use of genuine INFINITI floor mats can extend the life of your vehicle carpet and make it easier to clean the interior. Mats should be maintained with regular cleaning and replaced if they become excessively worn.

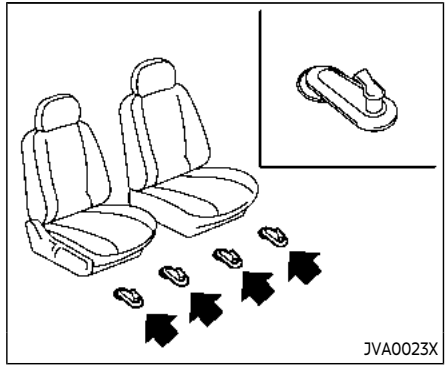

Floor mat installation

Your vehicle is equipped with floor mat positioning hook(s). The number and shape of the floor mat positioning hook(s) for each seating position varies depending on the vehicle.

When installing genuine INFINITI floor mats, follow the installation instructions provided with the floor mat and the following:

1. Position the floor mat in the floorwell so that the mat grommet holes are aligned with the hook(s).
2. Secure the grommet holes into the hook (s) and ensure that the floor mat is properly positioned.

3. Make sure the floor mat does not interfere with pedal operation. With the ignition in the OFF position and the shift lever in the P (Park) position, fully apply and release all pedals. The floor mat must not interfere with pedal operation or prevent the pedal from returning to its normal position. It is recommended you see an INFINITI retailer for details about installing the floor mats in your vehicle.

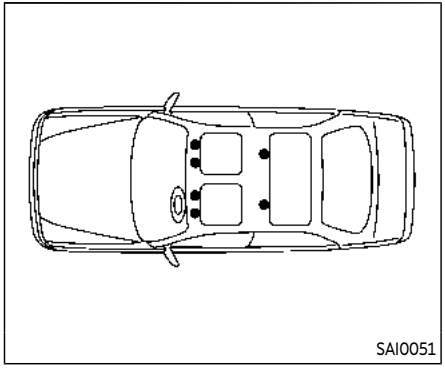

Positioning hooks

The illustration shows the location of the floor mat positioning hooks.

SEAT BELTS

The seat belts can be cleaned by wiping them with a sponge dampened in a mild soap solution. Allow the belts to dry completely before using them.

See “Seat belts” (P.1-11).

WARNING

Do not allow wet seat belts to roll up in the retractor. NEVER use bleach, dye, or chemical solvents to clean the seat belts, since these materials may severely weaken the seat belt webbing.

MOST COMMON FACTORS CONTRIBUTING TO VEHICLE CORROSION

- The accumulation of moisture-retaining dirt and debris in body panel sections, cavities, and other areas.
- Damage to paint and other protective coatings caused by gravel and stone chips or minor traffic accidents.

ENVIRONMENTAL FACTORS INFLUENCE THE RATE OF CORROSION

Moisture

Accumulation of sand, dirt and water on the vehicle body underside can accelerate corrosion. Wet floor coverings will not dry completely inside the vehicle, and should be removed for drying to avoid floor panel corrosion.

Relative humidity

Corrosion will be accelerated in areas of high relative humidity, especially those areas where the temperatures stay above freezing where atmospheric pollution exists, or where road salt is used.

Temperature

A temperature increase will accelerate the rate of corrosion to those parts which are not well ventilated.

Air pollution

Industrial pollution, the presence of salt in the air in coastal areas, or heavy road salt use will accelerate the corrosion process. Road salt will also accelerate the disintegration of paint surfaces.

TO PROTECT YOUR VEHICLE FROM CORROSION

- Wash and wax your vehicle often to keep the vehicle clean.
- Always check for minor damage to the paint and repair it as soon as possible.
- Keep drain holes at the bottom of the doors open to avoid water accumulation.
- Check the underbody for accumulation of sand, dirt or salt. If present, wash with water as soon as possible.

CAUTION

- **NEVER remove dirt, sand or other debris from the passenger compartment by washing it out with a hose. Remove dirt with a vacuum cleaner.**
- **Never allow water or other liquids to come in contact with electronic components inside the vehicle as this may damage them.**

Chemicals used for road surface deicing are extremely corrosive. They accelerate corrosion and deterioration of underbody components such as the exhaust system, fuel and brake lines, brake cables, floor pan and fenders.

In winter, the underbody must be cleaned periodically.

For additional protection against rust and corrosion, which may be required in some areas, it is recommended you consult an INFINITI retailer.

8 Do-it-yourself

Maintenance precautions 8-2
Engine compartment check locations 8-3
VR30DDTT engine 8-3
Engine cooling system 8-3
Checking engine coolant level 8-4
Changing engine coolant 8-5
Intercooler cooling system 8-5
Checking intercooler coolant level 8-6
Engine oil 8-6
Checking engine oil level 8-6
Changing engine oil and filter 8-7
Automatic Transmission Fluid (ATF) 8-9
Brake fluid 8-9
Window washer fluid 8-10
Battery 8-11
Checking battery fluid level 8-12
Jump starting 8-13
Variable voltage control system 8-13
Drive belts 8-13
Spark plugs 8-14
Replacing spark plugs 8-14
Air cleaner 8-15
Windshield wiper blades 8-15
Cleaning 8-15
Replacing 8-16
Brakes 8-16
Self-adjusting brakes 8-16
Brake pad wear warning 8-16
Fuses 8-17
Engine compartment 8-17
Passenger compartment 8-18
Intelligent Key battery replacement 8-19
Lights 8-22
Headlights 8-22
Exterior and interior lights 8-23
Wheels and tires 8-25
Tire pressure 8-25
Tire labeling 8-29
Types of tires 8-31
Tire chains 8-33
Changing wheels and tires 8-33
Jacking up the vehicle and replacing tires 8-37

MAINTENANCE PRECAUTIONS

When performing any inspection or maintenance work on your vehicle, always take care to prevent serious accidental injury to yourself or damage to the vehicle. The following are general precautions which should be closely observed.

WARNING

- **Park the vehicle on a level surface, apply the parking brake securely and block the wheels to prevent the vehicle from moving. Move the shift lever to P (Park).**
- **Be sure the ignition switch is in the OFF or LOCK position when performing any parts replacement or repairs.**
- **Never connect or disconnect the battery or any transistorized component while the ignition switch is in the ON position.**
- **Never leave the engine or automatic transmission related component harnesses disconnected while the ignition switch is in the ON position.**
- **If you must work with the engine running, keep your hands, clothing, hair and tools away from moving fans, belts and any other moving parts.**
- **It is advisable to secure or remove any loose clothing and remove any jewelry, such as rings, watches, etc. before working on your vehicle.**
- **Always wear eye protection whenever you work on your vehicle.**
- **If you must run the engine in an enclosed space such as a garage, be sure there is proper ventilation for exhaust gases to escape.**
- **Never get under the vehicle while it is supported only by a jack. If it is necessary to work under the vehicle, support it with safety stands.**
- **Keep smoking materials, flame and sparks away from fuel tank and the battery.**
- **Your vehicle is equipped with an automatic engine cooling fan. It may come on at any time without warning, even if the ignition key is in the OFF position and the engine is not running. To avoid injury, always disconnect the negative battery cable before working near the fan.**
- **Because the fuel lines are under high pressure even when the engine is off, it is recommended you visit an INFINITI retailer for service of the fuel filter or fuel lines.**

CAUTION

- **Do not work under the hood while the engine is hot. Turn the engine off and wait until it cools down.**
- **Avoid direct contact with used engine oil and coolant. Improperly disposed engine oil, coolant, and/or other vehicle fluids can damage the environment. Always conform to local regulations for disposal of vehicle fluid.**

This "8. Do-it-yourself" section gives instructions regarding only those items which are relatively easy for an owner to perform.

A genuine INFINITI Service Manual is also available. (See "Owner's Manual/Service Manual order information" (P.10-22).)

You should be aware that incomplete or improper servicing may result in operating difficulties or excessive emissions, and could affect your warranty coverage. **If in doubt about any servicing, it is recommended you have it done by an INFINITI retailer.**

ENGINE COMPARTMENT CHECK LOCATIONS

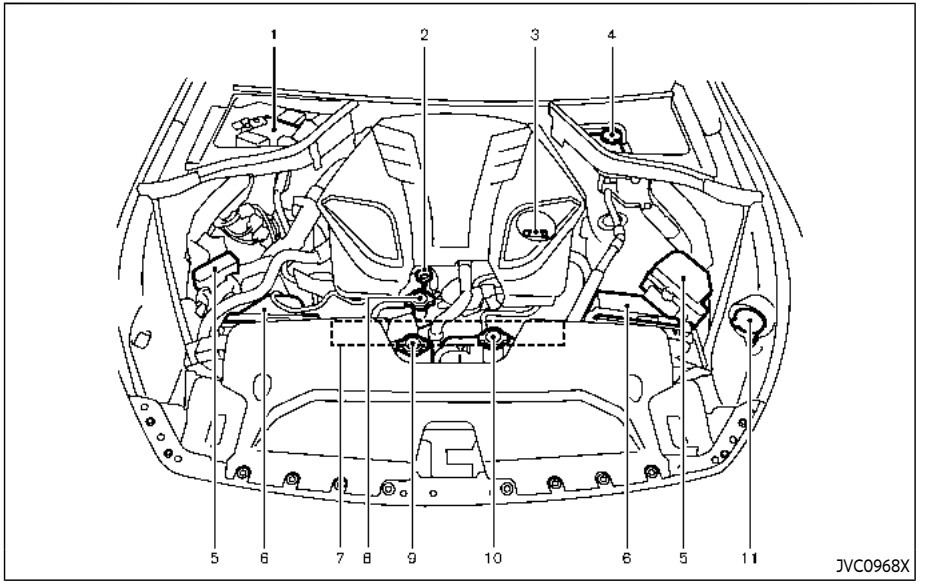

VR30DDTT ENGINE

1. Battery
2. Engine oil dipstick
3. Engine oil filler cap
4. Brake fluid reservoir
5. Fuse/fusible link holder
6. Air cleaner
7. Engine drive belt location
8. Radiator filler cap
9 Intercooler cooling reservoir
10. Engine coolant reservoir
11. Window washer fluid reservoir

ENGINE COOLING SYSTEM

The engine cooling system is filled at the factory with a pre-diluted mixture of 50% Genuine NISSAN Long Life Antifreeze/ Coolant (blue) and 50% water to provide year-round anti-freeze and coolant protection. The anti-freeze solution contains rust and corrosion inhibitors. Additional engine cooling system additives are not necessary.

WARNING

- **Never remove the radiator cap when the engine is hot. Wait until the engine and radiator cool down. Serious burns could be caused by high pressure fluid escaping from the radiator. See precautions in "If your vehicle overheats" (P.6-13) of this manual.**
- **The radiator is equipped with a pressure type radiator cap. To prevent engine damage, use only a genuine NISSAN radiator cap.**

CAUTION

- **Never use any cooling system additives such as radiator sealer. Additives may clog the cooling system and cause damage to the engine, trans-**

mission and/or cooling system.

- **When adding or replacing coolant, be sure to use only Genuine NISSAN Long Life Antifreeze/Coolant (blue) or equivalent. Genuine NISSAN Long Life Antifreeze/Coolant (blue) is pre-diluted to provide antifreeze protection to -34°F (-37°C). If additional freeze protection is needed due to weather where you operate your vehicle, add Genuine NISSAN Long Life Antifreeze/Coolant (blue) concentrate following the directions on the container. If an equivalent coolant other than Genuine NISSAN Long Life Antifreeze/Coolant (blue) is used, follow the coolant manufacture's instructions to maintain minimum antifreeze protection to -34°F (-37°C). The use of other types of coolant solutions other than Genuine NISSAN Long Life Antifreeze/Coolant (blue) or equivalent may damage the engine cooling system.**
- **The life expectancy of the factory-fill coolant is 105,000 miles (168,000 km) or 7 years. Mixing any other type of coolant other than Genuine NISSAN Long Life Antifreeze/Coolant (blue), including Genuine NISSAN Long Life Antifreeze/ Coolant (green), or the use of non-distilled water will reduce the life expectancy of the factory-fill coolant. Refer to the "9. Maintenance and schedules" section of this manual for more details.**

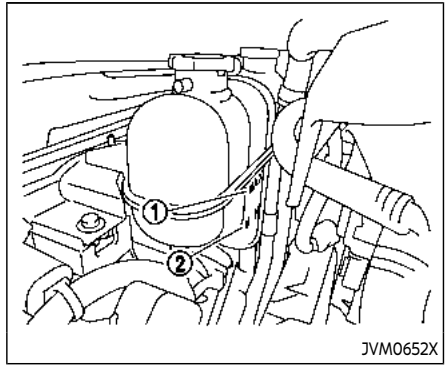

CHECKING ENGINE COOLANT LEVEL

Check the coolant level in the reservoir tank when the engine is running and after it reaches normal operating temperature. If the coolant level is below MIN level ②, add coolant up to the MAX level ①. If the reservoir tank is empty, check the coolant level in the radiator **when the engine is cold**. If there is insufficient coolant in the radiator, fill the radiator with coolant up to the filler cap above the radiator upper hose opening and also add it to the reservoir tank up to the MAX level ①. Put on the filler cap above the radiator upper hose and with the reservoir cap open, start the engine. Run the engine

until it reaches normal operating temperature. Add coolant up to the MAX level ①. Tighten the cap securely after adding engine coolant.

If the cooling system requires coolant frequently, have it checked. It is recommended you visit an INFINITI retailer for this service.

CHANGING ENGINE COOLANT

It is recommended that major cooling system repairs be performed by an INFINITI retailer. The service procedures can be found in the appropriate INFINITI Service Manual.

Improper servicing can result in reduced heater performance and engine overheating.

WARNING

- **To avoid the danger of being scalded, never change the coolant when the engine is hot.**
- **Never remove the radiator cap when the engine is hot. Serious burns could be caused by high pressure fluid escaping from the radiator.**
- **Avoid direct skin contact with used coolant. If skin contact is made, wash thoroughly with soap or hand cleaner as soon as possible.**
- **Keep coolant out of reach of children and pets.**

Engine coolant must be disposed of properly. Check your local regulations.

INTERCOOLER COOLING SYSTEM

The intercooler cooling system is filled at the factory with a pre-diluted mixture of 50% Genuine NISSAN Long Life Antifreeze/Coolant (blue) and 50% water to provide year-round anti-freeze and coolant protection. The antifreeze solution contains rust and corrosion inhibitors. Additional intercooler cooling system additives are not necessary.

WARNING

- **Never remove the coolant reservoir cap when the engine is hot. Wait until the engine cools down. Serious burns could be caused by high pressure fluid escaping from the coolant reservoir.**
- **The intercooler reservoir is equipped with a pressure type cap. To prevent engine and intercooler damage, use only a genuine NISSAN intercooler reservoir cap.**

CAUTION

- **Never use any additives in the coolant such as radiator sealer in the cooling system. This may cause damage to the intercooler.**

- **When adding or replacing coolant, be sure to use only Genuine NISSAN Long Life Antifreeze/Coolant (blue) or equivalent. Genuine NISSAN Long Life Antifreeze/Coolant (blue) is pre-diluted to provide antifreeze protection to -34°F(-37°C). If additional freeze protection is needed due to weather where you operate your vehicle, add Genuine NISSAN Long Life Antifreeze/Coolant (blue) concentrate following the directions on the container. If an equivalent coolant other than Genuine NISSAN Long Life Antifreeze/Coolant (blue) is used, follow the coolant manufacturer's instructions to maintain minimum antifreeze protection to -34°F (-37°C). The use of other types of coolant solutions other than Genuine NISSAN Long Life Antifreeze/Coolant (blue) or equivalent may damage the Intercooler cooling system.**

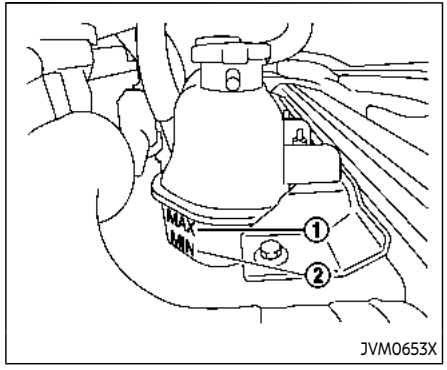

CHECKING INTERCOOLER COOLANT LEVEL

Check the coolant level in the reservoir when the engine is cold. If the coolant level is below the MIN level ②, add coolant to the MAX level ①.

If the intercooler cooling system frequently requires coolant, have it checked. It is recommended you visit an INFINITI retailer for this service.

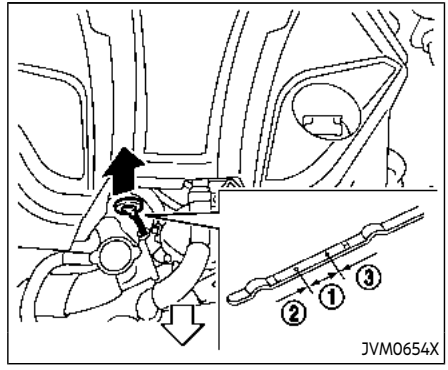

CHECKING ENGINE OIL LEVEL

1. Park the vehicle on a level surface and apply the parking brake.
2. Run the engine until it reaches operating temperature.
3. Turn off the engine. **Wait more than 15 minutes for the oil to drain back into the oil pan.**
4. Remove the dipstick and wipe it clean. Reinsert it all the way.
5. Remove the dipstick again and check the oil level. It should be within the range ①. If the oil level is below ②, remove the oil filler cap and pour recommended oil through the opening. **Do not overfill ③.**

6. Recheck oil level with the dipstick.

It is normal to add some oil between oil maintenance intervals or during the break-in period, depending on the severity of operating conditions.

CAUTION

Oil level should be checked regularly. Operating the engine with an insufficient amount of oil can damage the engine, and such damage is not covered by warranty.

CHANGING ENGINE OIL AND FILTER

Vehicle set-up

1. Park the vehicle on a level surface and apply the parking brake.
2. Run the engine until it reaches operating temperature.
3. Turn the engine off and wait more than 15 minutes.
4. Raise and support the vehicle using a suitable floor jack and safety jack stands.
   - Place the safety jack stands under the vehicle jack-up points.
   - A suitable adapter should be attached to the jack stand saddle.
5. Remove the plastic engine undercover.
   - Remove the small plastic clip at the center point of the undercover.
   - Then remove the other bolts that hold the undercover in place.

CAUTION

Make sure the correct lifting and support points are used to avoid vehicle damage.

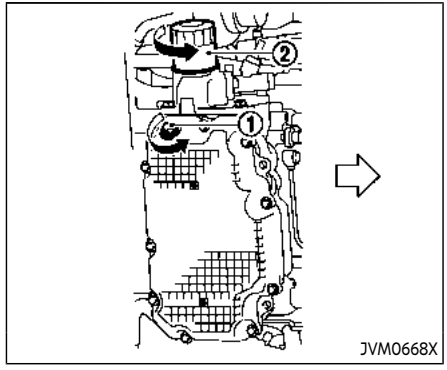

2WD models

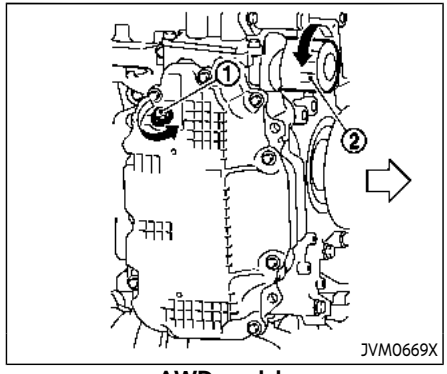

AWD models

Engine oil and filter

1. Place a large drain pan under the drain plug.
2. Remove the oil filler cap.
3. Remove the drain plug ① with a wrench and completely drain the oil.

CAUTION

Be careful not to burn yourself, as the engine oil is hot.

- **Waste oil must be disposed of properly.**
- **Check your local regulations.**

4. (Perform steps 4 to 7 only when the engine oil filter change is needed.)

   Loosen the oil filter ② with an oil filter wrench. Remove the oil filter by turning it by hand.
5. Wipe the engine oil filter mounting surface with a clean rag.

CAUTION

Be sure to remove any old rubber gasket remaining on the mounting surface of the engine. Failure to do so could lead to engine damage.

6. Coat the gasket on the new filter with clean engine oil.
7. Screw in the oil filter clockwise until a slight resistance is felt, then tighten additionally more than 2/3 turn.

   Oil filter tightening torque:
   11 to 15 ft-lb
   (14.7 to 20.6 N·m)
8. Clean and re-install the drain plug with a new washer. Securely tighten the drain plug with a wrench.

   Drain plug tightening torque:
   22 to 29 ft-lb
   (29.4 to 39.2 N·m)

   Do not use excessive force.
9. Refill engine with recommended oil and install the oil filler cap securely.

   See "Capacities and recommended fluids/lubricants" (P.10-2) for drain and refill capacity. The drain and refill capacity depends on the oil temperature and drain time. Use these specifications for reference only. Always use the dipstick to determine the proper amount of oil in the engine.
10. Start the engine and check for leakage around the drain plug and the oil filter. Correct as required.
11. Turn the engine off and wait more than 15 minutes. Check the oil level with the dipstick. Add engine oil if necessary.

After the operation

1. Install the engine undercover into position as the following steps.
   a. Pull the center of the small plastic clip out.
   b. Hold the engine undercover into position.
   c. Insert the clip through the undercover into the hole in the frame, then push the center of the clip in to lock the clip in place.
   d. Install the other bolts that hold the undercover in place. Be careful not to strip the bolts or over-tighten them.
2. Lower the vehicle carefully to the ground.
3. Dispose of waste oil and filter properly.

WARNING

- **Prolonged and repeated contact with used engine oil may cause skin cancer.**

- **Try to avoid direct skin contact with used oil. If skin contact is made, wash thoroughly with soap or hand cleaner as soon as possible.**
- **Keep used engine oil out of reach of children.**

AUTOMATIC TRANSMISSION FLUID (ATF)

When checking or replacement is required, we recommend an INFINITI retailer for servicing.

CAUTION

- **It is recommended that you use only Genuine NISSAN Matic S ATF. Do not mix with other fluids.**
- **Using automatic transmission fluid other than Genuine NISSAN Matic S ATF or equivalent may cause deterioration in driveability and automatic transmission durability, and may damage the automatic transmission. Damage caused by the use of fluid other than as recommended is not covered by the INFINITI new vehicle limited warranty.**

BRAKE FLUID

For further brake fluid information, see “Capacities and recommended fluids/lubricants” (P.10-2) of this manual.

WARNING

- **Use only new fluid from a sealed container. Old, inferior or contaminated fluid may damage the brake system. The use of improper fluids can damage the brake system and affect the vehicle's stopping ability.**
- **Clean the filler cap before removing.**
- **Brake fluid is poisonous and should be stored carefully in marked containers out of the reach of children.**

CAUTION

Do not spill the fluid on painted surfaces. This will damage the paint. If fluid is spilled, wash the surface with water.

WINDOW WASHER FLUID

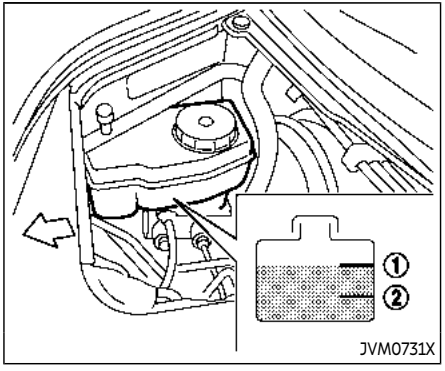

Check the fluid level in the reservoir. If the fluid is below the MIN line ② or the brake warning light comes on, add Genuine NISSAN Super Heavy Duty Brake Fluid or equivalent **DOT 3** fluid up to the MAX line ①. If fluid must be added frequently, the system should be checked. It is recommended you visit an INFINITI retailer for this service.

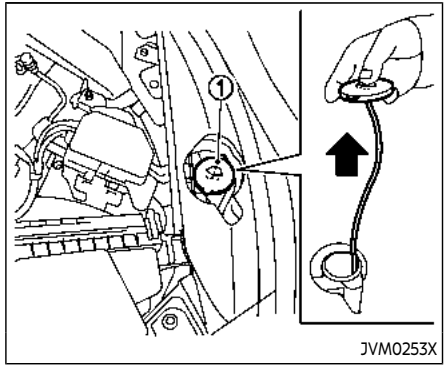

WARNING

Antifreeze is poisonous and should be stored carefully in marked containers out of the reach of children.

Fill the window washer fluid reservoir periodically. Add window washer fluid when the low window washer fluid warning appears in the vehicle information display.

To fill the window washer fluid reservoir, lift the cap off the reservoir and pour the window washer fluid into the reservoir opening.

To check the window washer fluid level, use your finger to plug the hole ① of the cap/tube assembly, then remove it from the reservoir. If there is no fluid in the tube, add fluid.

Add a washer solvent to the washer for better cleaning. In the winter season, add a windshield washer antifreeze. Follow the manufacturer's instructions for the mixture ratio.

Refill the reservoir more frequently when driving conditions require an increased amount of window washer fluid.

Recommended fluid is Genuine NISSAN Windshield Washer Concentrate Cleaner & Antifreeze or equivalent.

CAUTION

- **Do not substitute engine anti-freeze coolant for window washer solution. This may result in damage to the paint.**
- **Do not fill the window washer reservoir with washer fluid concentrates at full strength. Some methyl alcohol based washer fluid concentrates may permanently stain the grille if spilled while filling the window washer reservoir.**

- **Pre-mix washer fluid concentrates with water to the manufacturer's recommended levels before pouring the fluid into the window washer reservoir. Do not use the window washer reservoir to mix the washer fluid concentrate and water.**

BATTERY

- Keep the battery surface clean and dry. Clean the battery with a solution of baking soda and water.
- Make certain the terminal connections are clean and securely tightened.
- If the vehicle is not to be used for 30 days or longer, disconnect the negative (-) battery terminal cable to prevent discharging it.

NOTE:

Care should be taken to avoid situations that can lead to potential battery discharge and potential no-start conditions such as:

1. **Installation or extended use of electronic accessories that consume battery power when the engine is not running (Phone chargers, GPS, DVD players, etc.)**
2. **Vehicle is not driven regularly and/or only driven short distances.**

In these cases, the battery may need to be charged to maintain battery health.

CAUTION

When the battery cable is removed from the battery terminal, do not close either of front doors. The automatic window adjusting function will not work, and the side roof panel may be damaged.

To disconnect the negative (-) battery terminal, perform the procedure in the following order. Otherwise, the window and the side roof panel may contact and be damaged.

1. Close the windows.
2. Open the hood.
3. Close and lock all the doors.
4. Disconnect the negative (-) battery terminal.
5. Securely close the hood.

To connect the negative (-) battery terminal, perform the procedure in the following order. Otherwise, the window and the side roof panel may contact and be damaged.

1. Unlock and open the driver side door. Do not close the door.
2. Open the hood.
3. Connect the negative (-) battery terminal. Then close the hood.
4. Fully open the driver side door window.
5. Close the driver side door and the window.

WARNING

- **Do not expose the battery to flames or electrical sparks. Hydrogen gas**

generated by the battery is explosive. Do not allow battery fluid to contact your skin, eyes, fabrics, or painted surfaces. After touching a battery or battery cap, do not touch or rub your eyes. Thoroughly wash your hands. If the acid contacts your eyes, skin or clothing, immediately flush with water for at least 15 minutes and seek medical attention.

- **Do not operate the vehicle if the fluid in the battery is low. Low battery fluid can cause a higher load on the battery which can generate heat, reduce battery life, and in some cases lead to an explosion.**
- **When working on or near a battery, always wear suitable eye protection and remove all jewelry.**
- **Battery posts, terminals and related accessories contain lead and lead compounds. Wash hands after handling.**
- **Keep the battery out of the reach of children.**

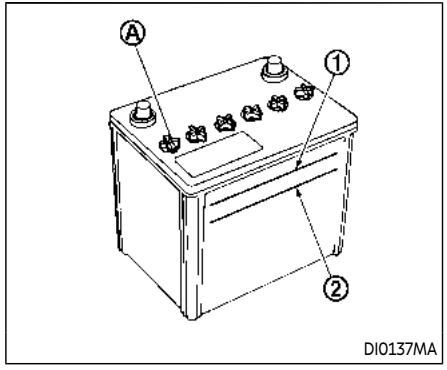

CHECKING BATTERY FLUID LEVEL

Check the fluid level in each cell (remove the battery cover if it is necessary). It should be between the UPPER LEVEL ① and LOWER LEVEL ② lines.

If it is necessary to add fluid, add only distilled water to bring the level to the indicator in each filler opening. **Do not overfill.**

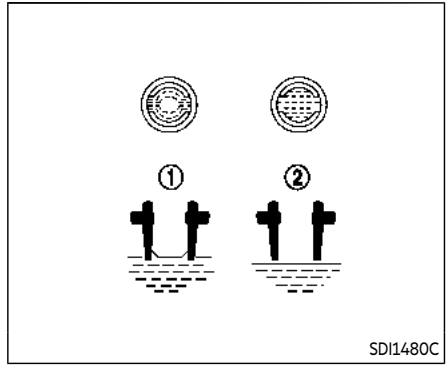

1. Remove the cell plugs Ⓐ.
2. Add distilled water up to the UPPER LEVEL ① line.

   If the side of the battery is not clear, check the distilled water level by looking directly above the cell; the condition ① indicates OK and the conditions ② needs more to be added.
3. Tighten cell plugs Ⓐ.

Vehicles operated in high temperatures or under severe conditions require frequent checks of the battery fluid level.

JUMP STARTING

If jump starting is necessary, see "Jump starting" (P.6-10). If the engine does not start by jump starting, the battery may have to be replaced. It is recommended you visit an INFINITI retailer for this service.

VARIABLE VOLTAGE CONTROL SYSTEM

CAUTION

- **Do not ground accessories directly to the battery terminal. Doing so will bypass the variable voltage control system and the vehicle battery may not charge completely.**
- **Use electrical accessories with the engine running to avoid discharging the vehicle battery.**

The variable voltage control system measures the amount of electrical discharge from the battery and controls voltage generated by the generator.

DRIVE BELTS

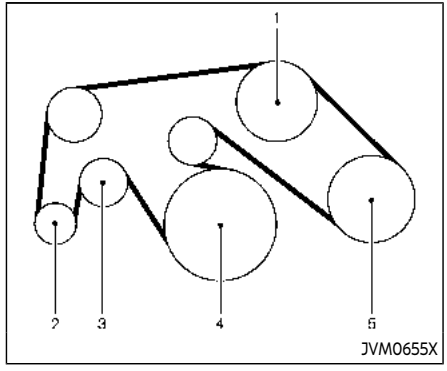

1. Water pump
2. Alternator
3. Drive belt auto-tensioner
4. Crankshaft pulley
5. Air conditioner compressor

WARNING

Be sure the ignition switch is in the OFF or LOCK position before servicing drive belts. The engine could rotate unexpectedly.

1. Visually inspect each belt for signs of unusual wear, cuts, fraying or looseness.

If the belt is in poor condition or loose, have it replaced or adjusted. It is recommended you visit an INFINITI retailer for this service.

2. Have the belts checked regularly for condition and tension in accordance with the maintenance schedule shown in the "9. Maintenance and schedules" section.

WARNING

Be sure the engine and the ignition switch are off and that the parking brake is engaged securely.

CAUTION

Be sure to use the correct socket to remove the spark plugs. An incorrect socket can damage the spark plugs.

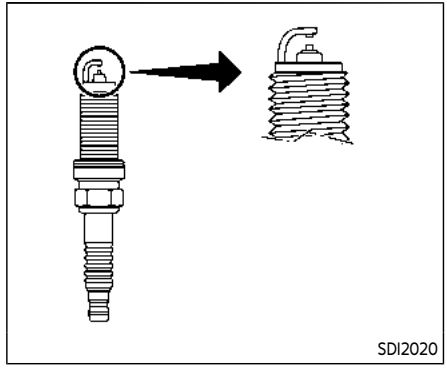

REPLACING SPARK PLUGS

If replacement is required, it is recommended you visit an INFINITI retailer for this service.

Iridium-tipped spark plugs

It is not necessary to replace the iridium-tipped spark plugs as frequently as the conventional type spark plugs since they will last much longer. Follow the maintenance schedule shown in the "9. Maintenance and schedules" section, but do not reuse them by cleaning or regapping.

Always replace spark plugs with recommended or equivalent ones.

AIR CLEANER

WARNING

- **Operating the engine with the air cleaner removed can cause you or others to be burned. The air cleaner not only cleans the air, it stops flame if the engine backfires. If it is not there, and the engine backfires, you could be burned. Do not drive with the air cleaner removed, and be careful when working on the engine with the air cleaner removed.**
- **Never pour fuel into the throttle body or attempt to start the engine with the air cleaner removed. Doing so could result in serious injury.**

The filter element should not be cleaned and reused. Replace it according to the maintenance schedule shown in the "9. Maintenance and schedules" section. When replacing the filter, wipe the inside of the air cleaner housing and the cover with a damp cloth.

When maintenance is required, it is recommended you contact an INFINITI retailer for servicing.

WINDSHIELD WIPER BLADES

CLEANING

If your windshield is not clear after using the windshield washer or if a wiper blade chatters when running, wax or other material may be on the blade or windshield.

Clean the outside of the windshield with a washer solution or a mild detergent. Your windshield is clean if beads do not form when rinsing with clear water.

Clean each blade by wiping it with a cloth soaked in a washer solution or a mild detergent. Then rinse the blade with clear water. If your windshield is still not clear after cleaning the blades and using the wiper, replace the blades.

Worn windshield wiper blades can damage the windshield and impair driver vision.

When a washer nozzle is clogged

If a washer nozzle is clogged or any malfunction occurs, have it checked. It is recommended you visit an INFINITI retailer for this service. Do not attempt to clean the nozzle using a needle or a pin. Doing so may damage the nozzle.

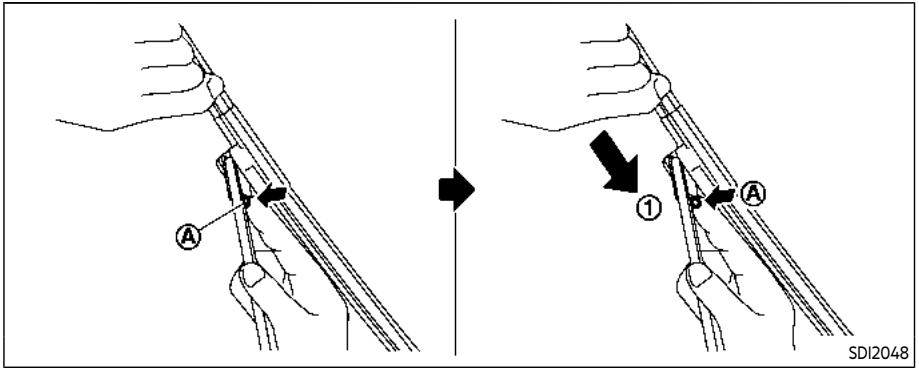

REPLACING

Replace the wiper blades if they are worn.

Before replacing the wiper blades, the wiper should be in the fully up position to avoid scratching the engine hood or damaging the wiper arm. To pull up the wiper arm, see "Wiper and washer switch" (P.2-34).

1. Pull the wiper arm.
2. Push the release tab Ⓐ, and then move the wiper blade down the wiper arm ① while pushing the release tab to remove.
3. Insert the new wiper blade onto the wiper arm until a click sounds.
4. Rotate the wiper blade so the dimple is in the groove.

CAUTION

- **After wiper blade replacement, return the wiper arm to its original position;**

  otherwise it may be damaged when the hood is opened.
- **Make sure the wiper blades contact the glass; otherwise the arm may be damaged from wind pressure.**

BRAKES

If the brakes do not operate properly, have the brakes checked. It is recommended you visit an INFINITI retailer for this service.

SELF-ADJUSTING BRAKES

Your vehicle is equipped with self-adjusting brakes.

The disc-type brakes self-adjust every time the brake pedal is applied.

WARNING

Have your brake system checked if the brake pedal height does not return to normal. It is recommended you visit an INFINITI retailer for this service.

BRAKE PAD WEAR WARNING

The disc brake pads have audible wear warnings. When a brake pad requires replacement, it will make a high pitched scraping sound when the vehicle is in motion. This scraping sound will first occur only when the brake pedal is depressed. After more wear of the brake pad, the sound will always be heard even if the brake pedal is not depressed. Have the brakes checked as soon as possible if the wear warning sound is heard.

Under some driving or climate conditions, occasional brake squeak, squeal or other noise may be heard. Occasional brake noise during light to moderate stops is normal and does not affect the function or performance of the brake system.

Proper brake inspection intervals should be followed. For additional information, see the maintenance schedule shown in the "9. Maintenance and schedules" section.

FUSES

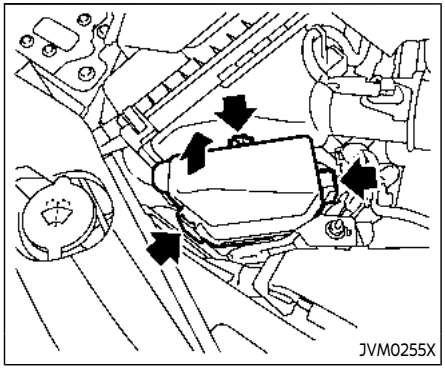

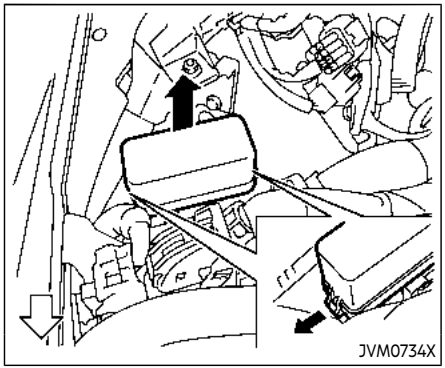

ENGINE COMPARTMENT

WARNING

Never use a fuse of a higher or lower amperage rating than that specified on the fuse box cover. This could damage the electrical system or electronic control units or cause a fire.

If any electrical equipment does not operate, check for an open fuse.

1. Be sure the ignition switch is placed in the OFF or LOCK position and the headlight switch is turned to OFF.
2. Open the engine hood.
3. Remove the fuse/fusible link holder cover.
4. Remove the fuse with the fuse puller.

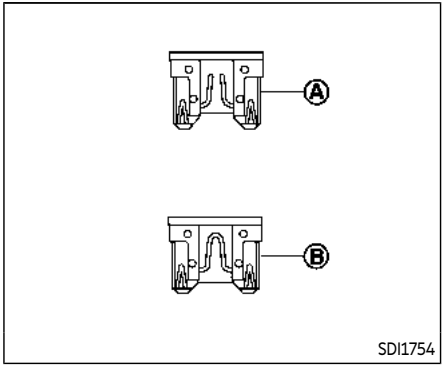

5. If the fuse is open Ⓐ, replace it with a new fuse Ⓑ. Spare fuses are stored in the passenger compartment fuse box.
6. If a new fuse also opens, have the electrical system checked and repaired. It is recommended you visit an INFINITI retailer for this service.

Fusible links

If any electrical equipment does not operate and fuses are in good condition, check the fusible links. If any of these fusible links are melted, replace only with genuine INFINITI parts.

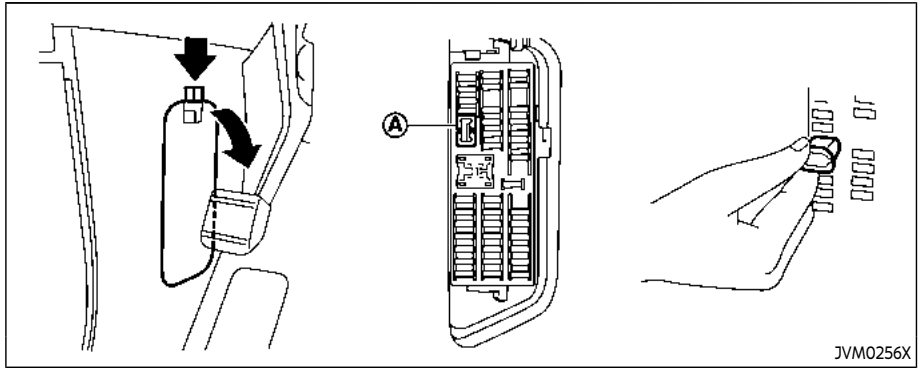

PASSENGER COMPARTMENT

WARNING

Never use a fuse of a higher or lower amperage rating than that specified on the fuse box cover. This could damage the electrical system or electronic control units or cause a fire.

If any electrical equipment does not operate, check for an open fuse.

1. Be sure the ignition switch is placed in the OFF or LOCK position and the headlight switch is turned to OFF.
2. Open the fuse box lid.
3. Remove the fuse with the fuse puller Ⓐ.
4. If the fuse is open, replace it with a new fuse.
5. If a new fuse also opens, have the electrical system checked and repaired. It is recommended you visit an INFINITI retailer for this service. Spare fuses are stored in the fuse box.

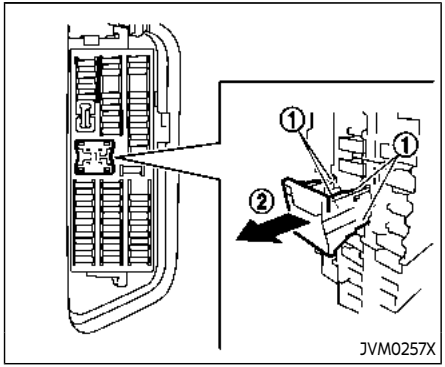

Extended storage fuse switch (if so equipped)

To reduce battery drain, the extended storage fuse switch comes from the factory switched off. Prior to delivery of your vehicle, the switch is pushed in (switched on) and should always remain on.

If the extended storage fuse switch is not pushed in (switched on), the "Shipping Mode On, Push Storage Fuse" warning may appear in the vehicle information display. See "19. Extended storage fuse warning" (P.2-24).

If any electrical equipment does not operate, remove the extended storage fuse switch and check for an open fuse.

NOTE:

If the extended storage fuse switch malfunctions or if the fuse is open, it is not necessary to replace the switch. In this case, remove the extended storage fuse switch and replace it with a new fuse of the same rating.

How to remove the extended storage fuse switch:

1. To remove the extended storage fuse switch, be sure the ignition switch is in the OFF or LOCK position.
2. Be sure the headlight switch is in the OFF position.
3. Remove the fuse box cover.
4. Pinch the locking tabs ① found on each side of the storage fuse switch.
5. Pull the storage fuse switch straight out from the fuse box ②.

INTELLIGENT KEY BATTERY REPLACEMENT

CAUTION

Be careful not to allow children to swallow the battery and removed parts.

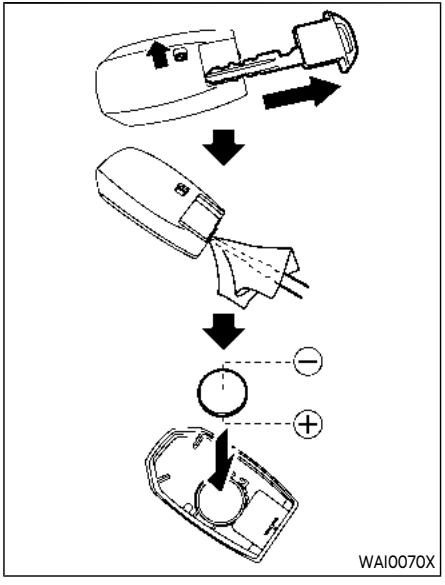

To replace the battery:

1. Release the lock knob at the back of the Intelligent Key and remove the mechanical key.
2. Insert a flat-blade screwdriver wrapped with a cloth into the slit of the corner and twist it to separate the upper part from the lower part.
3. Replace the battery with a new one.

   Recommended battery:

   CR2032 or equivalent

   - Do not touch the internal circuit and electric terminals as it could cause a malfunction.
   - Hold the battery by the edges. Holding the battery across the contact points will seriously deplete the storage capacity.
   - Make sure that the + side faces the bottom of the case.

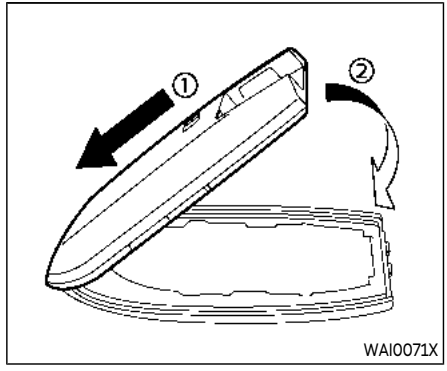

4. Align the tips of the upper and lower parts ①, and then push them together ② until it is securely closed.
5. Operate the buttons to check its operation.

If you need any assistance for replacement, it is recommended you visit an INFINITI retailer for this service.

FCC Notice:

For USA

FCC ID: KR5TXN7

This device complies with Part 15 of the FCC Rules. Operation is subject to the following two conditions: (1) this device may not cause harmful interference, and (2)

this device must accept any interference received, including interference that may cause undesired operation.

Changes or modifications not expressly approved by the party responsible for compliance could void the user's authority to operate the equipment.

This equipment complies with FCC radiation exposure limits set forth for portable use conditions.

For Canada

This device complies with Industry Canada licence-exempt RSS standard(s). Operation is subject to the following two conditions: (1) this device may not cause interference, and (2) this device must accept any interference, including interference that may cause undesired operation of the device.

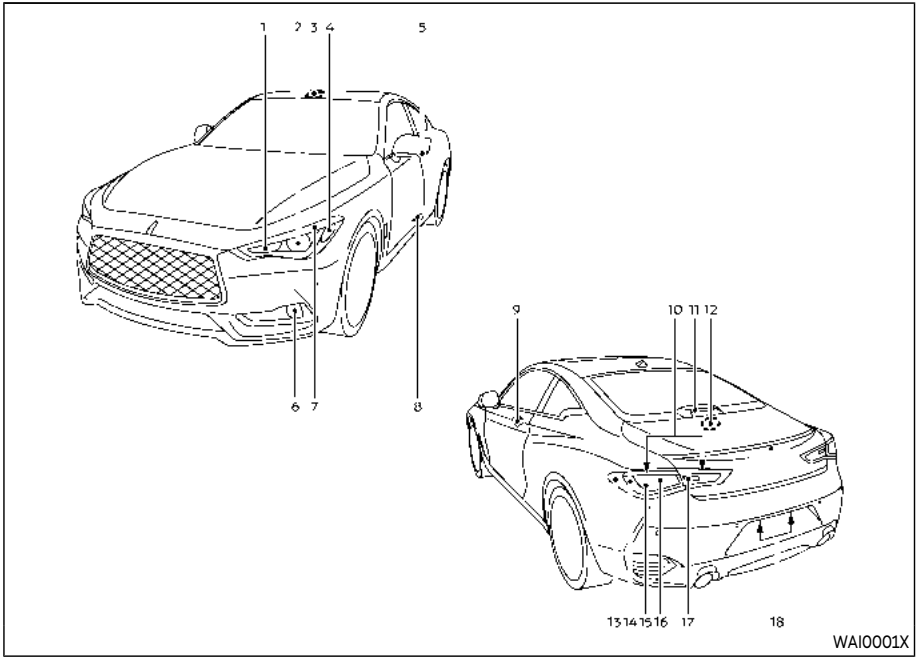

1. Headlight (high-beam)
2. Headlight (low-beam)
3. Map light
4. Front side marker light
5. Side turn signal light
6. Fog light
7. Parking light, daytime running light and front turn signal light
8. Step light
9. Courtesy light
10. Tail light
11. High-mounted stop light
12. Trunk light
13. Rear side marker light
14. Tail/Stop light
15. Stop light
16. Rear turn signal light
17. Back-up light
18. License plate light

HEADLIGHTS

If replacement is required, it is recommended you visit an INFINITI retailer for this service.

Fog may temporarily form inside the lens of the exterior lights in the rain or in a car wash. A temperature difference between the inside and the outside of the lens causes the fog. This is not a malfunction. If large drops of

water collect inside the lens, it is recommended you visit an INFINITI retailer for this service.

EXTERIOR AND INTERIOR LIGHTS

Item	Wattage (W)	Bulb No.
Headlight*		
High beams	LED	–
Low beams	LED	–
Front fog light*	LED	–
Parking light/Daytime running light/Front turn signal light*	LED	–
Front side marker light*	LED	–
Side turn signal light*	LED	–
Rear combination light*		
back-up	LED	–
rear turn signal	LED	–
tail	LED	–
stop	LED	–
tail/stop	LED	–
rear side marker	LED	–
License plate light*	LED	–
Courtesy light*	LED	–
Map light*	LED	–
Vanity mirror light*	1.8	–
Step light	5	–
Console box light*	2	–
Glove box light*	1.4	–
Inside door handle light (if so equipped)*	LED	–
Door trim light (if so equipped)*	LED	–
Front cup holder light*	LED	–
Footwell light*	LED	–

Item	Wattage (W)	Bulb No.
Trunk light	3.4	–
High-mounted stop light*	LED	–

*: It is recommended you visit an INFINITI retailer for replacement.

NOTE: It is recommended that you check with the Parts Department at an INFINITI retailer for the latest information about parts.

Replacement procedures

All other lights are either type A, B, C, D, E or F. When replacing a bulb, first remove the lens and/or cover.

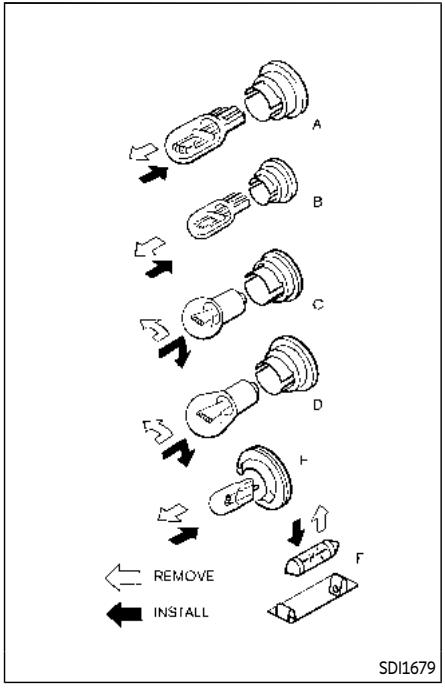

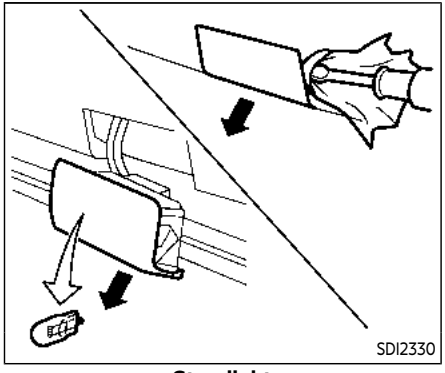

Step light

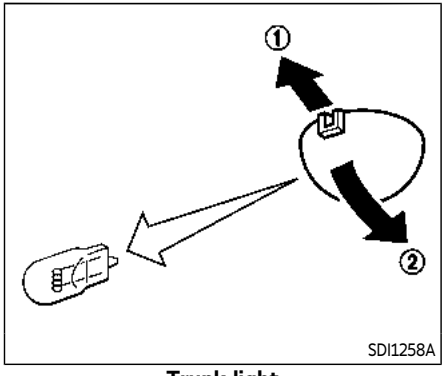

Trunk light

WHEELS AND TIRES

If you have a flat tire, see "Flat tire" (P.6-3).

TIRE PRESSURE

Tire Pressure Monitoring System (TPMS)

WARNING

Radio waves could adversely affect electric medical equipment. Those who use a pacemaker should contact the electric medical equipment manufacturer for the possible influences before use.

This vehicle is equipped with the Tire Pressure Monitoring System (TPMS). It monitors tire pressure of all tires except the spare. When the low tire pressure warning light is lit and the "Tire Pressure Low - Add Air" warning appears in the vehicle information display, one or more of your tires is significantly under-inflated.

The TPMS will activate only when the vehicle is driven at speeds above 16 MPH (25 km/h). Also, this system may not detect a sudden drop in tire pressure (for example a flat tire while driving).

For more details, see "Low tire pressure warning light" (P.2-14),"Tire Pressure Monitoring System (TPMS)" (P.5-5) and "Tire

Pressure Monitoring System (TPMS)" (P.6-3).

Tire inflation pressure

Check the pressure of the tires (including the spare) often and always prior to long distance trips. The recommended tire pressure specifications are shown on the Tire and Loading Information label under the "Cold Tire Pressure" heading. The Tire and Loading Information label is affixed to the driver side center pillar. Tire pressures should be checked regularly because:

- Most tires naturally lose air over time.
- Tires can lose air suddenly when driven over potholes or other objects or if the vehicle strikes a curb while parking.

The tire pressures should be checked when the tires are cold. The tires are considered COLD after the vehicle has been parked for 3 or more hours, or driven less than 1 mile (1.6 km) at moderate speeds.

TPMS with Tire Inflation Indicator provides visual and audible signals outside the vehicle for inflating the tires to the recommended COLD tire pressure. (See "TPMS with Tire Inflation Indicator" (P.5-8) about the TPMS with Tire Inflation Indicator.)

Incorrect tire pressure, including under inflation, may adversely affect tire life and vehicle handling.

WARNING

- **Improperly inflated tires can fail suddenly and cause an accident.**
- **The Gross Vehicle Weight rating (GVWR) is located on the F.M.V.S.S./C.M.V.S.S. label. The vehicle weight capacity is indicated on the Tire and Loading Information label. Do not load your vehicle beyond this capacity. Overloading your vehicle may result in reduced tire life, unsafe operating conditions due to premature tire failure, or unfavorable handling characteristics and could also lead to a serious accident. Loading beyond the specified capacity may also result in failure of other vehicle components.**
- **Before taking a long trip, or whenever you heavily load your vehicle, use a tire pressure gauge to ensure that the tire pressures are at the specified level.**
- **For additional information regarding tires, refer to "Important Tire Safety Information" (US) or "Tire Safety Information" (Canada) in the Warranty Information Booklet.**

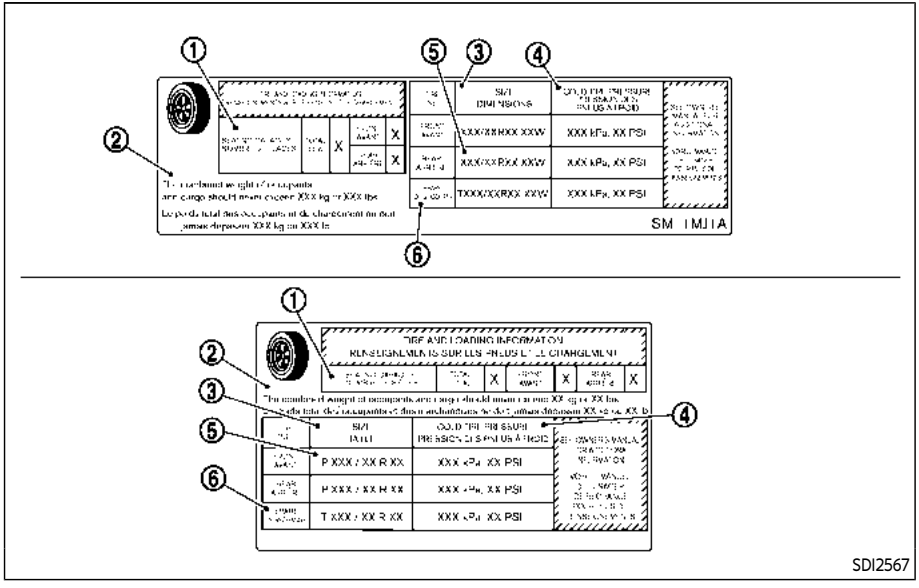

Tire and Loading Information label

① Seating capacity: The maximum number of occupants that can be seated in the vehicle.

② Vehicle load limit: See “Vehicle loading information” (P.10-15).

③ Original size: The size of the tires originally installed on the vehicle at the factory.

④ Cold tire pressure: Inflate the tires to this pressure when the tires are cold. Tires are considered COLD after the vehicle has been parked for 3 or more hours, or driven less than 1 mile (1.6 km) at moderate speeds. The recommended cold tire inflation is set by the manufacturer to provide the best balance of tire wear, vehicle handling, driveability, tire noise, etc., up to the vehicle's GVWR.

⑤ Tire size – see “Tire labeling” (P.8-29).

⑥ Spare tire size or compact spare tire size (if so equipped)

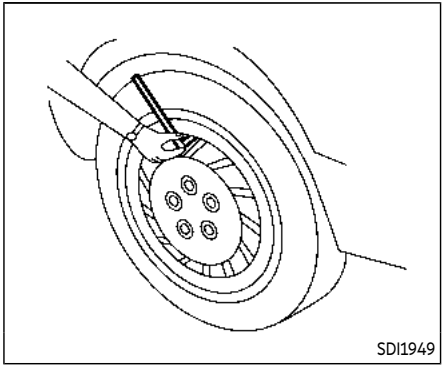

Checking the tire pressure

1. Remove the valve stem cap from the tire.
2. Press the pressure gauge squarely onto the valve stem. Do not press too hard or force the valve stem sideways, or air will escape. If the hissing sound of air escaping from the tire is heard while checking the pressure, reposition the gauge to eliminate this leakage.
3. Remove the gauge.
4. Read the tire pressure on the gauge stem and compare it to the specification shown on the Tire and Loading Information label.
5. Add air to the tire as needed. If too much air is added, press the core of the valve stem briefly with the tip of the gauge stem to release pressure. Recheck the pressure and add or release air as needed.
6. Install the valve stem cap.
7. Check the pressure of all other tires, including the spare.

	SIZE	COLD TIRE INFLATION PRESSURE
FRONT ORIGINAL TIRE	P255/40R-F19 96V	240 kPa, 35 PSI
	P255/35-R20 97V XL	260 kPa, 38 PSI
	255/35R20 97Y XL	280 kPa, 41 PSI
REAR ORIGINAL TIRE	P255/40R-F19 96V	240 kPa, 35 PSI
	P255/35-R20 97V XL	260 kPa, 38 PSI
	275/30R20 97Y XL	260 kPa, 38 PSI

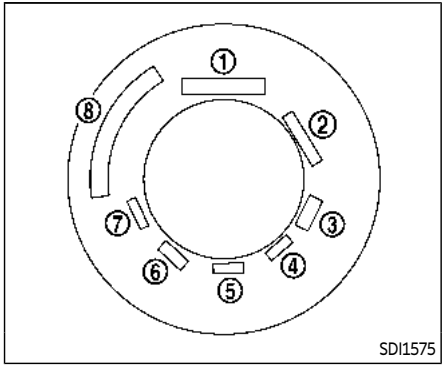

Example

TIRE LABELING

Federal law requires tire manufacturers to place standardized information on the sidewall of all tires. This information identifies and describes the fundamental characteristics of the tire and also provides the tire identification number (TIN) for safety standard certification. The TIN can be used to identify the tire in case of a recall.

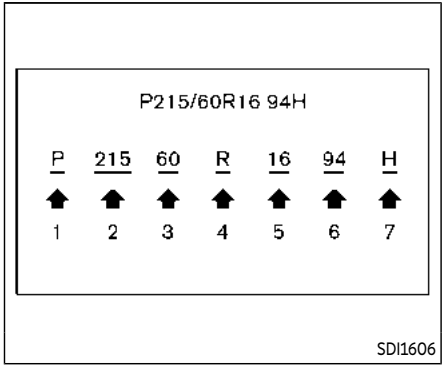

Example

① Tire size (example: P215/60R16 94H)

1. P: The "P" indicates the tire is designed for passenger vehicles. (Not all tires have this information.)
2. Three-digit number (215): This number gives the width in millimeters of the tire from sidewall edge to sidewall edge.
3. Two-digit number (60): This number, known as the aspect ratio, gives the tire's ratio of height to width.
4. R: The "R" stands for radial.

   F: The "F" after "R" indicates Self-Supporting type run-flat tire.
5. Two-digit number (16): This number is the wheel or rim diameter in inches.
6. Two- or three-digit number (94): This number is the tire's load index. It is a measurement of how much weight each tire can support. You may not find this information on all tires because it is not required by law.
7. H: Tire speed rating. You should not drive the vehicle faster than the tire speed rating.

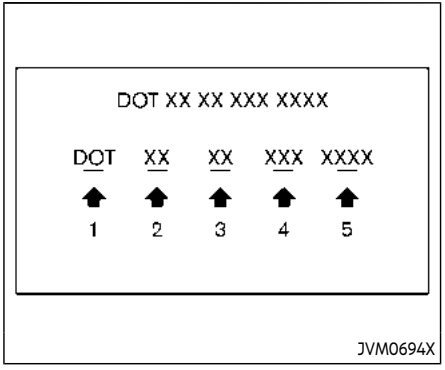

Example

② TIN (Tire Identification Number) for a new tire (example: DOT XX XX XXX XXXX)

1. DOT: Abbreviation for the "Department of Transportation". The symbol can be placed above, below or to the left or right of the Tire Identification Number.
2. Two-digit code: Manufacturer's identification mark
3. Two-digit code: Tire size
4. Three-digit code: Tire type code (Optional)
5. Four numbers represent the week and year the tire was built. For example, the numbers 3103 means the 31st week of 2003. If these numbers are missing, then look on the other sidewall of the tire.

③ Tire ply composition and material

The number of layers or plies of rubber-coated fabric in the tire.

Tire manufacturers also must indicate the materials in the tire, which include steel, nylon, polyester, and others.

④ Maximum permissible inflation pressure

This number is the greatest amount of air pressure that should be put in the tire. Do not exceed the maximum permissible inflation pressure.

⑤ Maximum load rating

This number indicates the maximum load in kilograms and pounds that can be carried by the tire. When replacing the tires on the vehicle, always use a tire that has the same load rating as the factory installed tire.

⑥ Term of "tubeless" or "tube type"

Indicates whether the tire requires an inner tube ("tube type") or not ("tubeless").

⑦ The word "radial"

The word "radial" is shown, if the tire has radial structure.

⑧ Manufacturer or brand name

Manufacturer or brand name is shown.

Other tire-related terminology:

In addition to the many terms that are defined throughout this section, Intended Outboard Sidewall is (1) the sidewall that contains a whitewall, bears white lettering or bears manufacturer, brand and/or model name molding that is higher or deeper than the same molding on the other sidewall of the tire, or (2) the outward facing sidewall of an asymmetrical tire that has a particular side that must always face outward when mounted on a vehicle.

TYPES OF TIRES

WARNING

- **When changing or replacing tires, be sure all four tires are of the same type (Example: Summer, All Season or Snow) and construction. An INFINITI retailer may be able to help you with information about tire type, size, speed rating and availability.**
- **Replacement tires may have a lower speed rating than the factory equipped tires, and may not match the potential maximum vehicle speed. Never exceed the maximum speed rating of the tire.**
- **Replacing tires with those not originally specified by INFINITI could affect the proper operation of the TPMS.**
- **For additional information regarding tires, refer to "Important Tire Safety Information" (US) or "Tire Safety Information" (Canada) in the Warranty Information Booklet.**

All season tires

INFINITI specifies all season tires on some models to provide good performance all year, including snowy and icy road conditions. All Season tires are identified by ALL SEASON and/or M&S (Mud and Snow) on the tire sidewall. Snow tires have better snow traction than All Season tires and may be more appropriate in some areas.

Summer tires

INFINITI specifies summer tires on some models to provide superior performance on dry roads. Summer tire performance is substantially reduced in snow and ice. Summer tires do not have the tire traction rating M&S on the tire sidewall.

If you plan to operate your vehicle in snowy or icy conditions, INFINITI recommends the use of SNOW tires or ALL SEASON tires on all four wheels.

Snow tires

If snow tires are needed, it is necessary to select tires equivalent in size and load rating to the original equipment tires. If you do not, it can adversely affect the safety and handling of your vehicle.

Generally, snow tires will have lower speed ratings than factory equipped tires and may not match the potential maximum vehicle speed. Never exceed the maximum speed rating of the tire.

If you install snow tires, they must be the same size, brand, construction and tread pattern on all four wheels.

For additional traction on icy roads, studded tires may be used. However, some U.S. states and Canadian provinces prohibit their use. Check local, state and provincial laws before installing studded tires. Skid and traction capabilities of studded snow tires, on wet or dry surfaces, may be poorer than that of non-studded snow tires.

Run-flat tires

Your vehicle is equipped with run-flat tires. You can continue driving to a safe location even if they are punctured. Always use run-flat tires of the specified size on all four wheels. Mixing tire sizes or construction may reduce vehicle handling stability. If necessary, contact an INFINITI retailer for assistance.

Frequently check the tire pressure and adjust pressure of each tire properly. The tire pressure can be also checked in the vehicle information display.

It can be difficult to tell if a run-flat tire is under-inflated or flat. Check the tire pressures as described earlier in this section. If the tire becomes under-inflated while driving, the low tire pressure warning light will illuminate. If the tire becomes flat while driving, the low tire pressure warning light

and the “Flat Tire - Visit dealer” warning will appear.

Low tire pressure:

If the vehicle is being driven with low tire pressure, the low tire pressure warning light will illuminate.

Flat tire:

If the vehicle is being driven with one or more flat tires, the low tire pressure warning light will illuminate continuously and a chime will sound for 10 seconds. A “Flat Tire - Visit dealer” warning also appears in the vehicle information display.

The chime will only sound at the first indication of a flat tire and the warning light will illuminate continuously. When the flat tire warning is activated, have the system reset and the tire checked, and replaced if necessary. It is recommended you visit an INFINITI retailer for these services. Even if the tire is inflated to the specified COLD tire pressure, the warning light will continue to illuminate until the system is reset by an INFINITI retailer.

If the low tire pressure warning light illuminates continuously and the “Flat Tire - Visit dealer” warning appears in the vehicle information display:

- Do not exceed 50 MPH (80 km/h).
- Increase your following distance to allow for increased stopping distances.
- Avoid sudden maneuvers, hard cornering and hard braking.

WARNING

- **Although you can continue driving with a punctured run-flat tire, remember that vehicle handling stability is reduced, which could lead to an accident and personal injury. Also, driving a long distance at high speeds may damage the tire.**
- **Do not drive at speeds above 50 MPH (80 km/h) and do not drive more than approximately 93 miles (150 km) with a punctured run-flat tire. The actual distance the vehicle can be driven on a flat tire depends on outside temperature, vehicle load, road conditions and other factors.**
- **Drive safely at reduced speeds. Avoid hard cornering or braking, which may cause you to lose control of the vehicle.**
- **If you detect any unusual sounds or vibrations while driving with a punctured run-flat tire, pull off the road to a safe location and stop the vehicle as soon as possible. The tire may be seriously damaged and need to be replaced.**

CAUTION

- **Never install tire chains on a punctured run-flat tire, as this could damage your vehicle.**
- **Avoid driving over any projection or pothole, as the clearance between the vehicle and the ground is smaller than normal.**
- **Do not enter an automated car wash with a punctured run-flat tire.**
- **It is recommended you have the punctured tire inspected by an INFINITI retailer or other authorized repair shop. Replace the tire as soon as possible if the tire is seriously damaged.**

TIRE CHAINS

CAUTION

Tire chains/cables should not be installed on P255/40RF19, P255/35R20, 255/35R20 and 275/30R20 tires. Doing so will cause damage to the vehicle. If you plan to use tire chains/cables, you should install 245/40RF19 run-flat tires or 245/40R19 non run-flat tires on your vehicle.

Use of tire chains may be prohibited according to location. Check the local laws before installing tire chains. When installing tire chains, make sure they are the proper size for the tires on your vehicle and are installed according to the chain manufacturer's suggestions. **Use only SAE Class S chains.** Class "S" chains are used on vehicles with restricted tire to vehicle clearance. Vehicles that can use Class "S" chains are designed to meet the SAE standard minimum clearances between the tire and the closest vehicle suspension or body component required to accommodate the use of a winter traction device (tire chains or cables). The minimum clearances are determined using the factory equipped tire size. Other types may damage your vehicle. Use chain tensioners when recommended by the tire chain manufacturer to ensure a tight fit. Loose end links of the tire chain must be secured or removed to prevent the possibility of whipping action damage to the fenders or underbody. If possible, avoid fully loading your vehicle when using tire chains. In addition, drive at a reduced speed. Otherwise, your vehicle may be damaged and/or vehicle handling and performance may be adversely affected.

Tire chains must be installed only on the rear wheels and not on the front wheels.

Never install tire chains on a TEMPORARY USE ONLY spare tire (if so equipped). Never install tire chains on a punctured run-flat tire (if so equipped), as this could damage your vehicle.

Do not use tire chains on dry roads. Driving with tire chains in such conditions can cause damage to the various mechanisms of the vehicle due to some overstress.

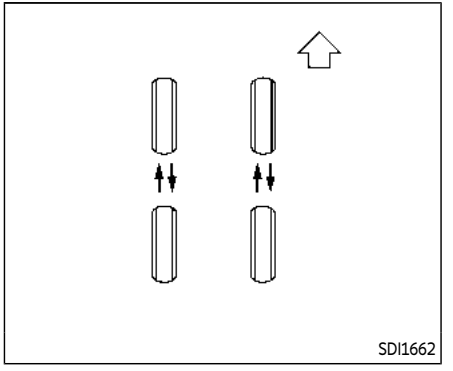

CHANGING WHEELS AND TIRES

Tire rotation (models equipped with same size tires on all wheels)

INFINITI recommends rotating the tires every 5,000 miles (8,000 km). (See "Flat tire" (P.6-3) for tire replacing procedures.)

As soon as possible, tighten the wheel nuts to the specified torque with a torque wrench.

Wheel nut tightening torque:
80 ft-lb (108 N·m)

The wheel nuts must be kept tightened to the specification at all times. It is recommended that wheel nuts be tightened to the specification at each tire rotation interval.

WARNING

- **After rotating the tires, check and adjust the tire pressure.**
- **Retighten the wheel nuts when the vehicle has been driven for 600 miles (1,000 km) (also in cases of a flat tire, etc.).**
- **Do not include the T-type spare tire or any other small size spare tire in the tire rotation.**
- **For additional information regarding tires, refer to "Important Tire Safety Information" (US) or "Tire Safety Information" (Canada) in the Warranty Information Booklet.**

After the ignition switch is placed in the ON position, it may take a period of time for the tire pressure to be displayed in the vehicle information display while the vehicle is driven. Depending on the radio wave circumstance, tire pressure may not correctly be displayed.

Tire rotation (models equipped with different size tires on front and rear)

Tires cannot be rotated on this vehicle, as front tires are a different size from rear tires.

A pin is on the front brake rotor to prevent the rear wheels from being installed in place of the front wheels. The spare tire can be installed in place of the front and rear wheels. When installing the spare tire in the front wheel, the hole in the spare tire wheel must be aligned with the pin on the brake rotor.

WARNING

- **If your vehicle is equipped with different size front and rear tires, never install the rear tire/wheel on the front of the vehicle. Doing so can damage the vehicle or tire. Damage to the tire may result in a sudden loss of air pressure which may cause loss of vehicle control in some driving conditions and cause a collision and personal injury.**
- **Retighten the wheel nuts when the vehicle has been driven for 600 miles (1,000 km) (also in cases of a flat tire, etc.).**
- **For additional information regarding tires, refer to "Important Tire Safety Information" (US) or "Tire Safety Information" (Canada) in the Warranty Information Booklet.**

After the ignition switch is placed in the ON position, it may take a period of time for the tire pressure to be displayed in the vehicle information display while the vehicle is driven. Depending on the radio wave circumstance, tire pressure may not cor-

rectly be displayed.

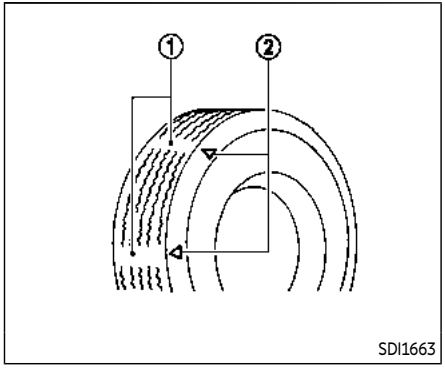

① : Wear indicator

② : Wear indicator location mark. The locations are shown by " △ ", "TWI", etc. depending on tire types.

Tire wear and damage

WARNING

- **Tires should be periodically inspected for wear, cracking, bulging or objects caught in the tread. If excessive wear, cracks, bulging or deep cuts are found, the tire(s) should be replaced.**
- **The original tires have built-in tread wear indicators. When wear indicators are visible, the tire(s) should be replaced.**
- **Tires degrade with age and use. Have tires, including the spare, over 6 years old checked by a qualified technician, because some tire damage may not be obvious. Replace the tires as necessary to prevent tire failure and possible personal injury.**
- **Improper service of the spare tire may result in serious personal injury. If it is necessary to repair the spare tire, it is recommended you visit an INFINITI retailer for this service.**
- **For additional information regarding tires, refer to "Important Tire Safety Information" (US) or "Tire Safety Information" (Canada) in the Warranty Information Booklet.**

Replacing wheels and tires

When replacing a tire, use the same size, tread design, speed rating and load carrying capacity as originally equipped. (See "Specifications" (P.10-8) for recommended types and sizes of tires and wheels.)

After the ignition switch is placed in the ON position, it may take a period of time for the tire pressure to be displayed while the vehicle is driven. Depending on the radio wave circumstance, tire pressure may not correctly be displayed.

WARNING

- **The use of tires other than those recommended or the mixed use of tires of different brands, construction (bias, bias-belted, radial or run-flat), or tread patterns can adversely affect the ride, braking, handling, ground clearance, body-to-tire clearance, tire chain clearance, speedometer calibration, headlight aim and bumper height. Some of these effects may lead to accidents and could result in serious personal injury.**
- **For Two-Wheel Drive (2WD) models, if your vehicle was originally equipped with 4 tires that were the same size and you are only replacing 2 of the 4 tires, install the new tires on the rear axle. Placing new tires on the front axle may cause loss of vehicle control in some driving conditions and cause an accident and personal injury.**
- **If the wheels are changed for any reason, always replace with wheels which have the same off-set dimension. Wheels of a different off-set could cause premature tire wear, degrade vehicle handling characteristics and/or interference with the brake discs/drums. Such interference can lead to decreased braking efficiency and/or early brake pad/shoe wear. See "Wheels and tires" (P.10-9) of this manual for wheel off-set dimensions.**
- **Since the spare tire is not equipped with the TPMS, when a spare tire is mounted or a wheel is replaced, the TPMS will not function and the low tire pressure warning light will flash for approximately 1 minute. The light will remain on after 1 minute. Have your tires replaced and/or TPMS system reset as soon as possible. It is recommended you visit an INFINITI retailer for these services.**
- **Replacing tires with those not originally specified by INFINITI could affect the proper operation of the TPMS.**
- **The TPMS sensor may be damaged if it is not handled correctly. Be careful when handling the TPMS sensor.**
- **When replacing the TPMS sensor, the ID registration may be required. It is recommended you contact an INFINITI retailer for ID registration.**
- **Do not use a valve stem cap that is not specified by INFINITI. The valve stem cap may become stuck.**
- **Be sure that the valve stem caps are correctly fitted. Otherwise the valve may be clogged up with dirt and cause a malfunction or loss of pressure.**
- **Do not install a damaged or deformed wheel or tire even if it has been repaired. Such wheels or tires could have structural damage and could fail without warning.**
- **The use of retread tire is not recommended.**
- **For additional information regarding tires, refer to "Important Tire Safety Information" (US) or "Tire Safety Information" (Canada) in the War-**

ranty Information Booklet.

Intelligent All-Wheel Drive (AWD) models

CAUTION

- **Always use tires of the same type, size, brand, construction (bias, bias-belted or radial), and tread pattern on all four wheels. Failure to do so may result in a circumference difference between tires on the front and rear axles which will cause excessive tire wear and may damage the transmission, transfer case and differential gears.**
- **ONLY use spare tires specified for the Intelligent AWD model.**

If excessive tire wear is found, it is recommended that all four tires be replaced with tires of the same size, brand, construction and tread pattern. The tire pressure and wheel alignment should also be checked and corrected as necessary. It is recommended you visit an INFINITI retailer for this service.

Wheel balance

Unbalanced wheels may affect vehicle handling and tire life. Even with regular use, wheels can get out of balance. Therefore, they should be balanced as required.

Wheel balance service should be performed with the wheels off the vehicle. Spin balancing the wheels on the vehicle could lead to mechanical damage.

For additional information regarding tires, refer to "Important Tire Safety Information" (US) or "Tire Safety Information" (Canada) in the INFINITI Warranty Information Booklet.

Care of wheels

See "Cleaning exterior" (P.7-2) for details about care of the wheels.

Emergency tire puncture repair kit (if so equipped)

The emergency tire puncture repair kit (Emergency Tire Sealant) is supplied with the vehicle instead of a spare tire. It can be used to temporarily repair minor tire punctures. If possible, have the vehicle towed to a facility that can repair or replace the flat tire. Using the emergency tire puncture repair kit may cause a malfunction of the tire pressure sensor and cause the low tire pressure warning light to illuminate.

See "Flat tire" (P.6-3) for more details.

JACKING UP THE VEHICLE AND REPLACING TIRES

This section contains the information about the vehicle jack-up procedures and the tire replacement.

NOTE:

Jacking tools are not equipped as standard with this vehicle. It is recommended you contact an INFINITI retailer about acquiring the tools.

For models with run-flat tires, you can continue driving to a safe location even if they are punctured. (See "Run-flat tires" (P.6-4) and "Run-flat tires" (P.8-31).)

For models with the emergency tire puncture repair kit, you can temporarily fix a minor tire puncture using it. (See "Repairing a flat tire (for models with emergency tire puncture repair kit)" (P.6-5).)

WARNING

- **Make sure the parking brake is securely applied and the transmission into the P (Park) position.**
- **Never change tires when the vehicle is on a slope, ice or slippery areas.**

This is hazardous.

- **Never change tires if oncoming traffic is close to your vehicle. Wait for professional road assistance.**

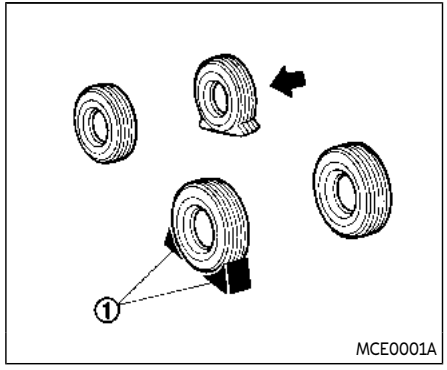

Blocking wheels

Place suitable blocks ① at both the front and back of the wheel diagonally opposite the flat tire to prevent the vehicle from moving when it is jacked up.

WARNING

Be sure to block the wheel as the vehicle may move and result in personal injury.

Jacking up the vehicle and removing a tire

WARNING

- **Never get under the vehicle while it is supported only by the jack. If it is necessary to work under the vehicle, support it with safety stands.**
- **Use the correct jack-up points. Never use any other part of the vehicle for jack support.**
- **Never jack up the vehicle more than necessary.**
- **Never use blocks on or under the jack.**
- **Do not start or run the engine while vehicle is on the jack, as it may cause the vehicle to move. This is especially true for vehicles with limited slip differentials.**
- **Do not allow passengers to stay in the vehicle while it is on the jack.**

Carefully read the caution label attached to the jack body and the following instructions.

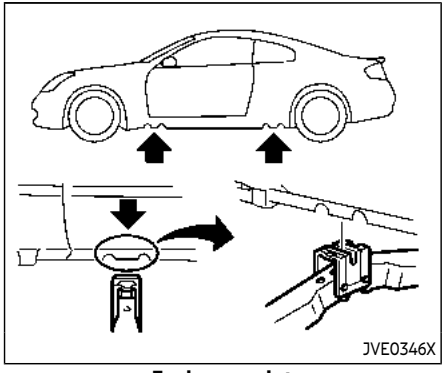

Jack-up point

1. Place the jack directly under the jack-up point as illustrated so the top of the jack contacts the vehicle at the jack-up point. Align the jack head between the two notches in the front or the rear as shown. Also fit the groove of the jack head between the notches as shown.

   The jack should be used on level firm ground.

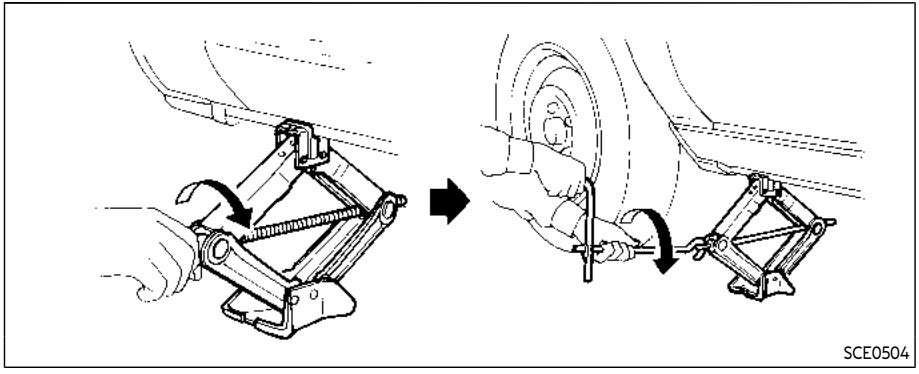

2. Loosen each wheel nut one or two turns by turning counterclockwise with the wheel nut wrench. **Do not remove the wheel nuts until the tire is off the ground.**
3. Carefully raise the vehicle until the tire clears the ground. To lift the vehicle, securely hold the jack lever and rod with both hands as shown above. Remove the wheel nuts, and then remove the tire.

Installing a tire

1. Clean any mud or dirt from the surface between the wheel and hub.
2. Carefully put the tire on and tighten the wheel nuts finger tight.
3. With the wheel nut wrench, tighten wheel nuts alternately and evenly in the sequence illustrated (①, ②, ③, ④, ⑤) until they are tight.
4. Lower the vehicle slowly until the tire touches the ground. Then, with the wheel nut wrench, tighten the wheel nuts securely in the sequence as illustrated. Lower the vehicle completely.

WARNING

- **Incorrect wheel nuts or improperly tightened wheel nuts can cause the wheel to become loose or come off.**

This could cause an accident.

- **Do not use oil or grease on the wheel studs or nuts. This could cause the nuts to become loose.**
- **Retighten the wheel nuts when the vehicle has been driven for 600 miles (1,000 km).**

- **As soon as possible, tighten the wheel nuts to the specified torque with a torque wrench.**

  Wheel nut tightening torque:
  80 ft-lb (108 N·m)

  The wheel nuts must be kept tightened to specification at all times. It is recommended that wheel nuts be tightened to specifications at each lubrication interval.
- **Adjust tire pressure to the COLD pressure.**

  COLD pressure:

  After the vehicle has been parked for three hours or more or driven less than 1 mile (1.6 km).

  COLD tire pressures are shown on the Tire and Loading Information label affixed to the driver side center pillar.

Securely store the jacking tools in the vehicle.

9 Maintenance and schedules

Maintenance requirement 9-2
General maintenance 9-2
Scheduled maintenance 9-2
Where to go for service 9-2
General maintenance 9-2
Explanation of general maintenance items 9-2
Explanation of scheduled maintenance items 9-5
Emission control system maintenance 9-5
Chassis and body maintenance 9-5
Maintenance schedules 9-6
Additional maintenance items for severe operating conditions 9-6
Oil control system 9-7
Standard maintenance 9-7
Standard maintenance 9-8
Maintenance under severe driving conditions 9-10
Maintenance log 9-11

MAINTENANCE REQUIREMENT

Some day-to-day and regular maintenance is essential to maintain your vehicle in good mechanical condition, as well as its emission and engine performance.

It is the owner's responsibility to make sure that the scheduled maintenance, as well as general maintenance, is performed.

As the vehicle owner, you are the only one who can ensure that your vehicle receives the proper maintenance. You are a vital link in the maintenance chain.

GENERAL MAINTENANCE

General maintenance includes those items which should be checked during normal day-to-day operation. They are essential for proper vehicle operation. It is your responsibility to perform these procedures regularly as prescribed.

Performing general maintenance checks requires minimal mechanical skill and only a few general automotive tools.

These checks or inspections can be done by yourself, a qualified technician or, if you prefer, an INFINITI retailer.

SCHEDULED MAINTENANCE

The maintenance items listed in this section are required to be serviced at regular intervals. However, under severe driving conditions, additional or more frequent maintenance will be required.

WHERE TO GO FOR SERVICE

If maintenance service is required or your vehicle appears to malfunction, have the systems checked and serviced. It is recommended you visit an INFINITI retailer for this service.

INFINITI technicians are well-trained specialists and are kept up to date with the latest service information through technical bulletins, service tips and training programs. They are completely qualified to work on INFINITI vehicles **before** work begins.

If your vehicle is involved in a collision, it is recommended that you ask your INFINITI retailer where the nearest INFINITI Certified Collision Center is located, or go to http://collision.infinitiusa.com.

You can be confident that an INFINITI retailer's service department can perform the service needed to meet the maintenance requirements on your vehicle.

GENERAL MAINTENANCE

During the normal day-to-day operation of the vehicle, general maintenance should be performed regularly as prescribed in this section. If you detect any unusual sounds, vibrations or smells, be sure to check for the cause and have it checked promptly. In addition, it is recommended you visit an INFINITI retailer if you think that repairs are required.

When performing any checks or maintenance work, closely observe "Maintenance precautions" (P.8-2) of this manual.

EXPLANATION OF GENERAL MAINTENANCE ITEMS

Additional information on the following items with "*" is found in the "8. Do-it-yourself" section of this manual.

Outside the vehicle

The maintenance items listed here should be performed from time to time, unless otherwise specified.

Doors and engine hood: Check that all doors and the engine hood, operate properly. Also ensure that all latches lock securely. Lubricate hinges, latches, latch pins, rollers and links if necessary. Make sure that the secondary latch keeps the hood from opening when the primary latch is released.

When driving in areas using road salt or

other corrosive materials, check lubrication frequently.

Lights*: Clean the headlights on a regular basis. Make sure that the headlights, stop lights, tail lights, turn signal lights, and other lights are all operating properly and installed securely. Also check headlight aim.

Road wheel nuts (lug nuts)*: When checking the tires, make sure no wheel nuts are missing, and check for any loose wheel nuts. Tighten if necessary.

Tire rotation*: Tires should be rotated every 5,000 miles (8,000 km). If your vehicle is equipped with different sized tires in the front and rear, tires cannot be rotated.

Tires*: Check the pressure with a gauge often and always prior to long distance trips. If necessary, adjust the pressure in all tires, including the spare, to the pressure specified. Check carefully for damage, cuts or excessive wear.

Tire Pressure Monitoring System (TPMS) transmitter components: Replace the TPMS transmitter grommet seal, valve core and cap when the tires are replaced due to wear or age.

Wheel alignment and balance: If the vehicle should pull to either side while driving on a straight and level road, or if you detect uneven or abnormal tire wear, there may be a need for wheel alignment.

If the steering wheel or seat vibrates at normal highway speeds, wheel balancing may be needed.

For additional information regarding tires, refer to "Important Tire Safety Information" (US) or "Tire Safety Information" (Canada) in the INFINITI Warranty Information Booklet.

Windshield: Clean the windshield on a regular basis. Check the windshield at least every six months for cracks or other damage. Have a damaged windshield repaired by a qualified repair facility. It is recommended that you have a damaged windshield repaired by an INFINITI retailer, or an INFINITI Certified Collision Center. To locate a collision center in your area, refer to http://collision.infinitiusa.com.

Windshield wiper blades*: Check for cracks or wear if they do not wipe properly.

Inside the vehicle

The maintenance items listed here should be checked on a regular basis, such as when performing scheduled maintenance, cleaning the vehicle, etc.

Accelerator pedal: Check the pedal for smooth operation and make sure the pedal does not catch or require uneven effort. Keep the floor mat away from the pedal.

Automatic transmission P (Park) mechanism: On a fairly steep hill, check that your vehicle is held securely with the shift lever in the P (Park) position without applying any brakes.

Brake pedal: Check the pedal for smooth operation. If the brake pedal suddenly goes down further than normal, the pedal feels spongy or the vehicle seems to take longer to stop, have your vehicle checked immediately. It is recommended you visit an INFINITI retailer for this service. Keep the floor mat away from the pedal.

Brakes: Check that the brakes do not pull the vehicle to one side when applied.

Parking brake: Check the parking brake operation regularly. The vehicle should be securely held on a fairly steep hill with only the parking brake applied. If the parking brake needs adjusted, it is recommended you visit an INFINITI retailer for this service.

Seats: Check seat position controls such as seat adjusters, seatback recliner, etc. to ensure they operate smoothly and that all latches lock securely in every position. Check that the head restraints move up and down smoothly and that the locks (if so equipped) hold securely in all latched positions.

Seat belts: Check that all parts of the seat belt system (for example, buckles, anchors, adjuster and retractors) operate properly and smoothly, and are installed securely. Check the belt webbing for cuts, fraying,

wear or damage.

Steering wheel: Check for changes in the steering conditions, such as excessive free play, hard steering or strange noises.

Warning lights and chimes: Make sure that all warning lights and chimes are operating properly.

Windshield defroster: Check that the air comes out of the defroster outlets properly and in sufficient quantity when operating the heater or air conditioner.

Windshield wiper and washer*: Check that the wipers and washer operate properly and that the wipers do not streak.

Under the hood and vehicle

The maintenance items listed here should be checked periodically (for example, each time you check the engine oil or refuel).

Battery*: Check the fluid level in each cell. It should be between the MAX and MIN lines. Vehicles operated in high temperatures or under severe condition require frequent checks of the battery fluid level.

NOTE:

Care should be taken to avoid situations that can lead to potential battery discharge and potential no-start conditions such as:

1. **Installation or extended use of electronic accessories that consume battery power when the engine is not running (Phone chargers, GPS, DVD players, etc.)**
2. **Vehicle is not driven regularly and/or only driven short distances.**

In these cases, the battery may need to be charged to maintain battery health.

Brake fluid level*: Make sure that the brake fluid level is between the MAX and MIN lines on the reservoir.

Engine coolant level*: Check the coolant level when the engine is cold.

Intercooler coolant level*: Check the coolant level when the engine is cold.

Engine drive belts*: Make sure that no belt is frayed, worn, cracked or oily.

Engine oil level*: Check the level after parking the vehicle on a level spot and turning off the engine. Wait more than 15 minutes for the oil to drain back into the oil pan.

Exhaust system: Make sure there are no loose supports, cracks or holes. If the sound of the exhaust seems unusual or there is a smell of exhaust fumes, immediately have the exhaust system inspected. It is recommended you visit an INFINITI retailer for this service. (See "Precautions when starting and driving" (P.5-4).)

Fluid leaks: Check under the vehicle for fuel, oil, water or other fluid leaks after the vehicle has been parked for a while. Water dripping from the air conditioner after use is normal. If you should notice any leaks or if gasoline fumes are evident, check for the cause and have it corrected immediately.

Radiator and hoses: Check the front of the radiator and clean off any dirt, insects, leaves, etc., that may have accumulated. Make sure the hoses have no cracks, deformation, rot or loose connections.

Underbody: The underbody is frequently exposed to corrosive substances such as those used on icy roads or to control dust. It is very important to remove these substances, otherwise rust will form on the floor pan, frame, fuel lines and around the exhaust system. At the end of winter, the underbody should be thoroughly flushed with plain water, being careful to clean those areas where mud and dirt may accumulate. For additional information, see "Cleaning exterior" (P.7-2).

Windshield washer fluid*: Check that there is adequate fluid in the reservoir.

EXPLANATION OF SCHEDULED MAINTENANCE ITEMS

The following descriptions are provided to give you a better understanding of the scheduled maintenance items that should be regularly checked or replaced. The maintenance schedule indicates at which mileage/time intervals each item requires service.

In addition to scheduled maintenance, your vehicle requires that some items be checked during normal day-to-day operation. Refer to "General maintenance" (P.9-2).

Items marked with "*" are recommended by INFINITI for reliable vehicle operation. You are not required to perform maintenance on these items in order to maintain the warranties which come with your vehicle. Other maintenance items and intervals are required.

When applicable, additional information can be found in the "8. Do-it yourself" section of this manual.

NOTE:

INFINITI does not advocate the use of non-OEM approved aftermarket flushing systems and strongly advises against performing these services on an INFINITI product. Many of the aftermarket flushing systems use non-OEM approved chemicals or solvents, the use of which has not been validated by INFINITI.

For recommended fuel, lubricants, fluids, grease, and refrigerant, refer to "Capacities and recommended fluids/lubricants" (P.10-2) of this manual.

EMISSION CONTROL SYSTEM MAINTENANCE

Drive belts*:

Check engine drive belts for wear, fraying or cracking and for proper tension. Replace any damaged drive belts.

Engine air filter:

Replace at specified intervals. When driving for prolonged periods in dusty conditions, check/replace the filter more frequently.

Engine coolant*:

Replace coolant at the specified interval. When adding or replacing coolant, be sure to use only Genuine NISSAN Long Life Antifreeze/Coolant (blue) or equivalent with the proper mixture. (Refer to "Engine cooling system" (P.8-3) to determine the proper mixture for your area.)

NOTE:

Mixing any other type of coolant or the use of non-distilled water may reduce the recommended service interval of the coolant.

Intercooler coolant:

Intercooler coolant is maintenance-free.

Engine oil and oil filter:

Replace engine oil and oil filter at the specified intervals. For recommended oil grade and viscosity refer to "Capacities and recommended fluids/lubricants" (P.10-2).

Engine valve clearance*:

Inspect only if valve noise increases. Adjust valve clearance if necessary.

Evaporative emissions control vapor lines*:

Check vapor lines for leaks or looseness. Tighten connections or replace parts as necessary.

Fuel lines*:

Check the fuel hoses, piping and connections for leaks, looseness, or deterioration. Tighten connections or replace parts as necessary.

Spark plugs:

Replace at specified intervals. Install new plugs of the type as originally equipped.

CHASSIS AND BODY MAINTENANCE

Brake lines and cables:

Visually inspect for proper installation. Check for chafing, cracks, deterioration, and signs of leaking. Replace any deteriorated or damaged parts immediately.

Brake pads, rotors, drums and linings:

Check for wear, deterioration and fluid leaks. Replace any deteriorated or damaged parts immediately.

Exhaust system:

Visually inspect the exhaust pipes, muffler and hangers for leaks, cracks, deterioration, and damage. Tighten connections or replace parts as necessary.

In-cabin microfilter:

Replace at specified intervals. When driving for prolonged periods in dusty conditions, replace the filter more frequently.

Propeller shaft(s):

Check for damage, looseness, and grease leakage. (4WD/AWD/RWD)

Steering gear and linkage, axle and suspension parts, drive shaft boots:

Check for damage, looseness, and leakage of oil or grease. Under severe driving conditions, inspect more frequently.

Tire rotation:

Tires should be rotated every 5,000 miles (8,000 km) according to the instructions under "Explanation of general maintenance items" (P.9-2). When rotating tires, check for damage and uneven wear. Replace if necessary.

Transmission fluid/oil, differential oil and transfer case oil:

Visually inspect for signs of leakage at specified intervals.

MAINTENANCE SCHEDULES

To help ensure smooth, safe and economical driving, INFINITI provides two maintenance schedules that may be used, depending upon the conditions in which you usually drive. These schedules contain both distance and time intervals, up to 120,000 miles (192,000 km)/144 months. For most people, the odometer reading will indicate when service is needed. However, if you drive very little, your vehicle should be serviced at the regular time intervals shown in the schedule.

After 120,000 miles (192,000 km)/144 months, continue maintenance at the same mileage/time intervals.

ADDITIONAL MAINTENANCE ITEMS FOR SEVERE OPERATING CONDITIONS

Additional maintenance items for severe operating conditions; should be performed on vehicles that are driven under especially demanding conditions. Additional maintenance items should be performed if you primarily operate your vehicle under the following conditions:

- Repeated short trips of less than 5 miles (8 km).
- Repeated short trips of less than 10 miles (16 km) with outside temperatures remaining below freezing.

- Operating in hot weather in stop-and-go "rush hour" traffic.
- Extensive idling and/or low speed driving for long distances, such as police, taxi or door-to-door delivery use.
- Driving in dusty conditions.
- Driving on rough, muddy or salt spread roads.
- Using a car-top carrier.

OIL CONTROL SYSTEM

Your vehicle is equipped with oil control system. It calculates engine oil and filter change interval based on driving conditions. Driving in severe conditions will shorten the engine oil and filter change interval. When the oil replacement indicator appears in the vehicle information display, the engine oil and filter need to be replaced.

STANDARD MAINTENANCE

The following tables show the standard maintenance schedule. Depending upon weather and atmospheric conditions, varying road surfaces, individual driving habits and vehicle usage, additional or more frequent maintenance may be required.

After 120,000 miles (192,000 km)/144 months, continue maintenance at the same mileage/time intervals.

STANDARD MAINTENANCE

Abbreviations: I = Inspect and correct or replace as necessary, R = Replace

MAINTENANCE OPERATION Perform at number of miles, kilometers or months, whichever comes first.	Miles × 1,000 (km × 1,000) Months	**MAINTENANCE INTERVAL**																							
		5 (8) 6	10 (16) 12	15 (24) 18	20 (32) 24	25 (40) 30	30 (48) 36	35 (56) 42	40 (64) 48	45 (72) 54	50 (80) 60	55 (88) 66	60 (96) 72	65 (104) 78	70 (112) 84	75 (120) 90	80 (128) 96	85 (136) 102	90 (144) 108	95 (152) 114	100 (160) 120	105 (168) 126	110 (176) 132	115 (184) 138	120 (192) 144
Air cleaner filter	NOTE (1)						R						R						R						R
Automatic transmission fluid	NOTE (2)																								
Brake fluid★					R				R				R				R				R				R
Brake lines and cables			I		I		I		I		I		I		I		I		I		I		I		I
Brake pads and rotors★			I		I		I		I		I		I		I		I		I		I		I		I
Drive belts	NOTE (3)								I*		I*		I*		I*		I*		I*		I*		I*		I*
Engine coolant*	NOTE (4) (5)																								
Engine oil & oil filter★	NOTE (6)		R		R		R		R		R		R		R		R		R		R		R		R
EVAP vapor lines & Fuel lines					I*				I*				I*				I*				I*				I*
Exhaust system★					I				I				I				I				I				I
Fuel filter	NOTE (2)																								
In-cabin microfilter				R			R			R			R			R			R			R			R
Intake & exhaust valve clearance	NOTE (7)																								
Intelligent Key battery				I			R			R			R			R			R			R			R
Propeller shaft & drive shaft boots (AWD models)★			I		I		I		I		I		I		I		I		I		I		I		I
Spark plugs	NOTE (8)	Replace every 105,000 miles (168,000 km)																							
Steering gear and linkage, axle and suspension parts★					I				I				I				I				I				I
Stop lamp switch and brake pedal position switch	NOTE (9)		I		I		I		I		I		I		I		I		I		I		I		I
Tire rotation	NOTE (10)																								
Transfer fluid & differential gear oil	NOTE (11)		I		I		I		I		I		I		I		I		I		I		I		I

NOTE:

Maintenance items with "★" should be performed more frequently according to "Maintenance under severe driving conditions" (P.9-10).
(1) If operating mainly in dusty conditions, more frequent maintenance may be required.
(2) Periodic maintenance is not required.
(3) After 40,000 miles (64,000 km) or 48 months, inspect every 10,000 miles (16,000 km) or 12 months. Replace the drive belts if found damaged.
(4) First replacement interval is 105,000 miles (168,000 km) or 84 months. After first replacement, replace every 75,000 miles (120,000 km) or 60 months.
(5) Use only Genuine NISSAN Long Life Antifreeze/Coolant (blue) or equivalent with proper mixture ratio of 50% antifreeze and 50% demineralized or distilled water. Mixing any other type of coolant or the use of non-distilled water may reduce the life expectancy of the factory fill coolant.
(6) If the oil replacement indicator is displayed, change the engine oil and filter as soon as possible. After replacing the engine oil, reset the display.
(7) Periodic maintenance is not required. However, if valve noise increases, inspect valve clearance.
(8) Replace spark plug when the plug gap exceeds 0.043 in (1.1 mm) even if within specified replacement mileage.
(9) Inspect the clearance between the brake pedal and the switches.
(10) Refer to "Tire rotation" under "General maintenance" (P.9-2).
(11) If using a car-top carrier, or driving on rough or muddy roads, change (not just inspect) oil at every 20,000 miles (32,000 km) or 24 months.
***: Maintenance items and intervals with "*" are recommended by INFINITI for reliable vehicle operation. The owner need not perform such maintenance in order to maintain the emission warranty or manufacturer recall liability. Other maintenance items and intervals are required.**

MAINTENANCE UNDER SEVERE DRIVING CONDITIONS

The maintenance intervals shown on the preceding pages are for normal operating conditions. If the vehicle is mainly operated under severe driving conditions as shown below, more frequent maintenance must be performed on the following items as shown in the table.

Severe driving conditions

- Repeated short trips of less than 5 miles (8 km).
- Repeated short trips of less than 10 miles (16 km) with outside temperatures remaining below freezing.
- Operating in hot weather in stop-and-go "rush hour" traffic.
- Extensive idling and/or low speed driving for long distances, such as police, taxi or door-to-door delivery use.
- Driving in dusty conditions.
- Driving on rough, muddy, or salt spread roads.
- Using a car-top carrier.

Maintenance operation: Inspect = Inspect and correct or replace as necessary.

Maintenance item	Maintenance operation	Maintenance interval
Brake fluid	Replace	Every 10,000 miles (16,000 km) or 12 months
Brake pads & rotors	Inspect	Every 5,000 miles (8,000 km) or 6 months
Exhaust system	Inspect	Every 5,000 miles (8,000 km) or 6 months
Propeller shaft & drive shaft boots (AWD models)	Inspect	Every 5,000 miles (8,000 km) or 6 months
Steering gear & linkage, axle & suspension parts	Inspect	Every 5,000 miles (8,000 km) or 6 months

MAINTENANCE LOG

5,000 Miles (8,000 km) or 6 Months Retailer Name: Date: Mileage: Retailer Stamp:	**10,000 Miles (16,000 km) or 12 Months** Retailer Name: Date: Mileage: Retailer Stamp:	**15,000 Miles (24,000 km) or 18 Months** Retailer Name: Date: Mileage: Retailer Stamp:
20,000 Miles (32,000 km) or 24 Months Retailer Name: Date: Mileage: Retailer Stamp:	**25,000 Miles (40,000 km) or 30 Months** Retailer Name: Date: Mileage: Retailer Stamp:	**30,000 Miles (48,000 km) or 36 Months** Retailer Name: Date: Mileage: Retailer Stamp:
35,000 Miles (56,000 km) or 42 Months Retailer Name: Date: Mileage: Retailer Stamp:	**40,000 Miles (64,000 km) or 48 Months** Retailer Name: Date: Mileage: Retailer Stamp:	**45,000 Miles (72,000 km) or 54 Months** Retailer Name: Date: Mileage: Retailer Stamp:

50,000 Miles (80,000 km) or 60 Months Retailer Name: Date: Mileage: Retailer Stamp:	**55,000 Miles (88,000 km) or 66 Months** Retailer Name: Date: Mileage: Retailer Stamp:	**60,000 Miles (96,000 km) or 72 Months** Retailer Name: Date: Mileage: Retailer Stamp:
65,000 Miles (104,000 km) or 78 Months Retailer Name: Date: Mileage: Retailer Stamp:	**70,000 Miles (112,000 km) or 84 Months** Retailer Name: Date: Mileage: Retailer Stamp:	**75,000 Miles (120,000 km) or 90 Months** Retailer Name: Date: Mileage: Retailer Stamp:
80,000 Miles (128,000 km) or 96 Months Retailer Name: Date: Mileage: Retailer Stamp:	**85,000 Miles (136,000 km) or 102 Months** Retailer Name: Date: Mileage: Retailer Stamp:	**90,000 Miles (144,000 km) or 108 Months** Retailer Name: Date: Mileage: Retailer Stamp:

95,000 Miles (152,000 km) or 114 Months Retailer Name: Date: Mileage: Retailer Stamp:	**100,000 Miles (160,000 km) or 120 Months** Retailer Name: Date: Mileage: Retailer Stamp:	**105,000 Miles (168,000 km) or 126 Months** Retailer Name: Date: Mileage: Retailer Stamp:
110,000 Miles (176,000 km) or 132 Months Retailer Name: Date: Mileage: Retailer Stamp:	**115,000 Miles (184,000 km) or 138 Months** Retailer Name: Date: Mileage: Retailer Stamp:	**120,000 Miles (192,000 km) or 144 Months** Retailer Name: Date: Mileage: Retailer Stamp:

MEMO

10 Technical and consumer information

Capacities and recommended fluids/lubricants 10-2
Fuel information 10-4
Engine oil and oil filter recommendation 10-6
Air conditioning system refrigerant and lubricant recommendations 10-7
Specifications 10-8
Engine 10-8
Wheels and tires 10-9
Dimensions 10-10
When traveling or registering in another country 10-11
Vehicle identification 10-11
Vehicle Identification Number (VIN) plate 10-11
Vehicle identification number (chassis number) 10-11
Engine serial number 10-12
F.M.V.S.S./C.M.V.S.S. certification label 10-12
Emission control information label 10-12
Tire and loading information label 10-13
Air conditioner specification label 10-13
Installing front license plate 10-13
Removing air deflectors 10-14
Vehicle loading information 10-15
Terms 10-15
Vehicle load capacity 10-16
Loading tips 10-17
Measurement of weights 10-17
Towing a trailer 10-18
Flat towing 10-18
Uniform tire quality grading 10-18
Treadwear 10-18
Traction AA, A, B and C 10-19
Temperature A, B and C 10-19
Emission control system warranty 10-19
Reporting safety defects 10-20
Readiness for Inspection/Maintenance (I/M) test (US only) 10-21
Event Data Recorders (EDR) 10-22
Owner's Manual/Service Manual order information 10-22

CAPACITIES AND RECOMMENDED FLUIDS/LUBRICANTS

The following are approximate capacities. The actual refill capacities may be a little different. When refilling, follow the procedure instructed in the "8. Do-it-yourself" section to determine the proper refill capacity.

Fluid type			Capacity (approximate)			Recommended Fluids/Lubricants
			Metric Measure	US Measure	Imperial Measure	
Fuel			76 L	20 gal	16-5/8 gal	· See "Fuel information" (P.10-4).
Engine oil*1 Drain and refill *1: For additional information, see "Engine oil" (P.8-6).	Two-Wheel Drive (2WD) model	With oil filter change	5.3 L	5-5/8 qt	4-5/8 qt	· Genuine "NISSAN Motor Oil 0W-20 SN" (or equivalent) is recommended. · If the above motor oil (or engine oil) is not available, a synthetic 0W-20 GF-5 SN motor oil (or engine oil) may be used. Damage caused by the use of motor oil (or engine oil) other than as recommended is not covered under INFINITI's new vehicle limited warranty. For additional information, see "Engine oil and oil filter recommendation" (P.10-6).
		Without oil filter change	5.1 L	5-3/8 qt	4-1/2 qt	
	All-Wheel Drive (AWD) model	With oil filter change	5.9 L	6-1/4 qt	5-1/4 qt	
		Without oil filter change	5.7 L	6 qt	5 qt	
Engine coolant	Standard and premium grade	Total (with reservoir)	9.3 L	9-7/8 qt	8-1/8 qt	· Pre-diluted Genuine NISSAN Long Life Antifreeze/Coolant (blue) or equivalent
		Reservoir	0.5 L	1/2 qt	1/2 qt	
	Sport grade	Total (with reservoir)	10.4 L	11 qt	9-1/8 qt	
		Reservoir	0.5 L	1/2 qt	1/2 qt	
Intercooler coolant	Total (with reservoir)		3.2 L	3-3/8 qt	2-7/8 qt	
	Reservoir		0.4 L	3/8 qt	3/8 qt	
Automatic Transmission Fluid (ATF)			–	–	–	· Genuine NISSAN Matic S ATF or equivalent · INFINITI recommends using Genuine NISSAN Matic S ATF (or equivalent) ONLY in INFINITI automatic transmissions. Do not mix with other fluids. Using fluids that are not equivalent to Genuine NISSAN Matic S ATF may damage the automatic transmission. Damage caused by the use of fluids other than as recommended is not covered under the INFINITI's new vehicle limited warranty.
Differential gear oil	Front		–	–	–	· Genuine NISSAN Differential Oil Hypoid Super GL-5 80W-90 or equivalent conventional (non-synthetic) oil
	Rear		–	–	–	· Genuine NISSAN HYPOID FLUID·S1 GL-5 75W-80 or equivalent
Transfer fluid			–	–	–	· Genuine NISSAN Matic J ATF or equivalent · INFINITI recommends using Genuine NISSAN Matic J ATF (or equivalent) ONLY in INFINITI transfers. Do not mix with other fluids. Using fluids that are not equivalent to Genuine NISSAN Matic J ATF may damage the transfer. Damage caused by the use of fluids other than as recommended is not covered under the INFINITI's new vehicle limited warranty.
Brake fluid			Refill to the proper oil level according to the instructions in the "8. Do-it-yourself" section.			· Genuine NISSAN Super Heavy Duty Brake Fluid*4 or equivalent DOT 3 *4: Available in mainland U.S.A. through an INFINITI retailer.
Multi-purpose grease			–	–	–	· NLGI No. 2 (Lithium soap base)

Fluid type	Capacity (approximate)			Recommended Fluids/Lubricants
	Metric Measure	US Measure	Imperial Measure	
Air conditioning system refrigerant	–	–	–	· HFC-134a (R-134a) For additional information, see “Vehicle identification” (P.10-11) for air conditioner specification label.
Air conditioning system lubricants	–	–	–	· NISSAN A/C System Oil PAG or exact equivalent
Window washer fluid	–	–	–	· Genuine NISSAN Windshield Washer Concentrate Cleaner & Antifreeze or equivalent

FUEL INFORMATION

Use unleaded premium gasoline with an octane rating of at least 91 AKI (Anti-Knock Index) number (Research octane number 96).

INFINITI recommends the use of unleaded premium gasoline with 93 AKI number (Research octane number 98) to obtain the maximum vehicle performance and the best driveability.

If unleaded premium gasoline is not available, unleaded regular gasoline with an octane rating of at least 87 AKI number (Research octane number 91) may be temporarily used, but only under the following precautions:

- Have the fuel tank filled only partially with unleaded regular gasoline, and fill up with unleaded premium gasoline as soon as possible.
- Avoid full throttle driving and abrupt acceleration.

Use unleaded premium gasoline for maximum vehicle performance.

CAUTION

- **Using a fuel other than that specified could adversely affect the emission control system, and may also affect warranty coverage.**
- **Under no circumstances should a leaded gasoline be used, because this will damage the three-way catalyst.**
- **Do not use a fuel containing more than 15% ethanol in your vehicle. Your vehicle is not designed to run on a fuel containing more than 15% ethanol. Using a fuel containing more than 15% ethanol in a vehicle not specifically designed for a fuel containing more than 15% ethanol can adversely affect the emission control devices and systems of the vehicle. Damage caused by such fuel is not covered by the INFINITI new vehicle limited warranty.**
- **Do not use fuel that contains the octane booster methylcyclopentadienyl manganese tricarbonyl (MMT). Using fuel containing MMT may adversely affect vehicle performance and vehicle emissions. Not all fuel dispensers are labeled to indicate MMT content, so you may have to consult your gasoline retailer for more details. Note that Federal and California laws prohibit the use of MMT in reformulated gasoline.**
- **U.S. government regulations require ethanol dispensing pumps to be identified by a small, square, orange and black label with the common abbreviation or the appropriate percentage for that region.**

Gasoline specifications

INFINITI recommends using gasoline that meets the World-Wide Fuel Charter (WWFC) specifications where it is available. Many of the automobile manufacturers developed this specification to improve emission system and vehicle performance. Ask your service station manager if the gasoline meets the World-Wide Fuel Charter (WWFC) specifications.

Reformulated gasoline

Some fuel suppliers are now producing reformulated gasolines. These gasolines are specially designed to reduce vehicle emissions. INFINITI supports efforts towards cleaner air and suggests that you use reformulated gasoline when available.

Gasoline containing oxygenates

Some fuel suppliers sell gasoline containing oxygenates such as ethanol, MTBE and methanol with or without advertising their presence. INFINITI does not recommend the use of fuels of which the oxygenate content and the fuel compatibility for your INFINITI cannot be readily determined. If in doubt, ask

your service station manager.

If you use oxygenate-blend gasoline, please take the following precautions as the usage of such fuels may cause vehicle performance problems and/or fuel system damage.

- **The fuel should be unleaded and have an octane rating no lower than that recommended for unleaded gasoline.**
- **If an oxygenate-blend, excepting a methanol blend, is used, it should contain no more than 15% oxygenate.**
- **If a methanol blend is used, it should contain no more than 5% methanol (methyl alcohol, wood alcohol). It should also contain a suitable amount of appropriate cosolvents and corrosion inhibitors. If not properly formulated with appropriate cosolvents and corrosion inhibitors, such methanol blends may cause fuel system damage and/or vehicle performance problems. At this time, sufficient data is not available to ensure that all methanol blends are suitable for use in INFINITI vehicles.**

If any undesirable driveability problems such as engine stalling or hard hot starting are experienced after using oxygenate-blend fuels, immediately change to a non-oxygenate fuel or a fuel with a low blend of MTBE.

Take care not to spill gasoline during refueling. Gasoline containing oxygenates can cause paint damage.

E-15 fuel

E-15 fuel is a mixture of approximately 15% fuel ethanol and 85% unleaded gasoline. E-15 can only be used in vehicles designed to run on E-15 fuel. U.S. government regulations require fuel ethanol dispensing pumps to be identified with small, square, orange and black label with the common abbreviation or the appropriate percentage for that region.

E-85 fuel

E-85 fuel is a mixture of approximately 85% fuel ethanol and 15% unleaded gasoline. E-85 can only be used in a Flexible Fuel Vehicle (FFV). Do not use E-85 fuel in your vehicle. U.S. government regulations require fuel ethanol dispensing pumps to be identified by a small, square, orange and black label with the common abbreviation or the appropriate percentage for that region.

Fuel containing MMT

MMT, or methylcyclopentadienyl manganese tricarbonyl, is an octane boosting additive. INFINITI does not recommend the use of fuel containing MMT. Such fuel may adversely affect vehicle performance, including the emissions control system. Note that while some fuel pumps label MMT content, not all do, so you may have to consult your gasoline retailer for more details.

Aftermarket fuel additives

INFINITI does not recommend the use of any aftermarket fuel additives (Example: fuel injector cleaner, octane booster, intake valve deposit removers, etc.) which are sold commercially. Many of these additives intended for gum, varnish or deposit removal may contain active solvent or similar ingredients that can be harmful to the fuel system and engine.

Octane rating tips

Using unleaded gasoline with an octane rating lower than recommended above can cause persistent, heavy spark knock. (Spark knock is a metallic rapping noise.) If severe, this can lead to engine damage. If you detect a persistent heavy spark knock even when using gasoline of the stated octane rating, or if you hear steady spark knock while holding a steady speed on level roads, it is recommended you have an INFINITI retailer correct the condition. Failure to correct the condition is misuse of the vehicle, for which INFINITI is not responsible.

Incorrect ignition timing will result in knocking, after-run or overheating. This in turn

may cause excessive fuel consumption or damage to the engine. If any of the above symptoms are encountered, have your vehicle checked. It is recommended you visit an INFINITI retailer for servicing.

However, now and then you may notice light spark knock for a short time while accelerating or driving up hills. This is no cause for concern, because you get the greatest fuel benefit when there is light spark knock for a short time under heavy engine load.

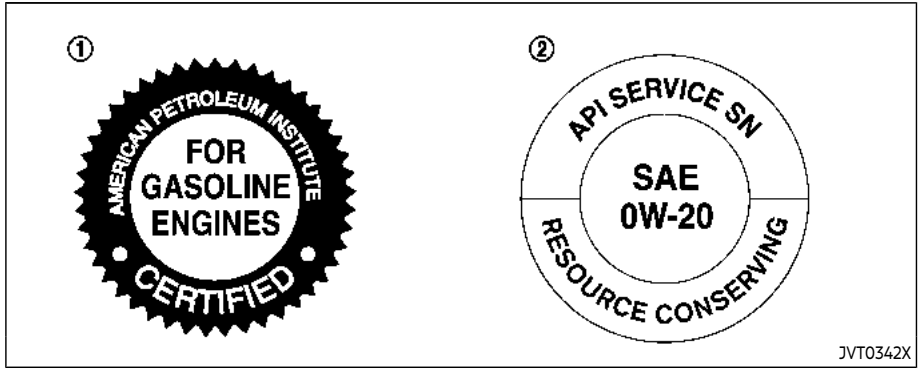

① API certification mark
② API service symbol

ENGINE OIL AND OIL FILTER RECOMMENDATION

Selecting the correct oil

It is essential to choose the correct grade, quality, and viscosity engine oil to ensure satisfactory engine life and performance, see "Capacities and recommended fluids/lubricants" (P.10-2). INFINITI recommends the use of an energy conserving oil in order to improve fuel economy.

Select only engine oils that meet the American Petroleum Institute (API) certification or International Lubricant Standardization and Approval Committee (ILSAC) certification and SAE viscosity standard. These oils have the API certification mark on the front of the container. Oils which do not have the specified quality label should not be used as they could cause engine damage.

Oil additives:

INFINITI does not recommend the use of oil additives. The use of an oil additive is not necessary when the proper oil type is used and maintenance intervals are followed.

Oil which may contain foreign matter or has been previously used should not be used.

Oil viscosity:

The engine oil viscosity or thickness changes with temperature. Because of this, it is important that the engine oil viscosity be selected based on the temperatures at which the vehicle will be operated before the next oil change. Choosing an oil viscosity other than that recommended could cause serious engine damage.

Selecting the correct oil filter:

Your new vehicle is equipped with a high-quality genuine NISSAN oil filter. When replacing, use the genuine oil filter or its equivalent for the reason described in change intervals.

Change intervals:

The oil and oil filter change intervals for your engine are based on the use of the specified quality oils and filters. Oil and filter other than the specified quality, or oil and filter change intervals longer than recommended could reduce engine life. Damage to engines caused by improper maintenance or use of incorrect oil and filter quality and/or viscosity is not covered by the new INFINITI vehicle limited warranties.

Your engine was filled with a high quality engine oil when it was built. You do not have to change the oil before the first recommended change interval. Oil and filter change intervals depend upon how you use your vehicle.

AIR CONDITIONING SYSTEM REFRIGERANT AND LUBRICANT RECOMMENDATIONS

The air conditioning system in your INFINITI vehicle must be charged with the refrigerant HFC-134a (R-134a) and the lubricant, NISSAN A/C system oil PAG or the exact equivalents.

CAUTION

The use of any other refrigerant or lubricant may cause severe damage to the air conditioning system and may require the replacement of all air conditioner system components.

The refrigerant HFC-134a (R-134a) in your INFINITI vehicle will not harm the earth's ozone layer. Although this refrigerant does not affect the earth's atmosphere, certain governmental regulations require the recovery and recycling of any refrigerant during automotive air conditioning system service. Your INFINITI retailer has the trained technicians and equipment needed to recover and recycle your air conditioning system refrigerant.

It is recommended you visit an INFINITI retailer when servicing your air conditioning system.

SPECIFICATIONS

ENGINE

Model		VR30DDTT
Type		Gasoline, 4-cycle
Cylinder arrangement		6-cylinder, V-slanted at 60°
Bore × Stroke	in (mm)	3.386× 3.386 (86.0 × 86.0)
Displacement	cu in (cm^3)	182.88 (2,997)
Firing order		1-2-3-4-5-6
Idle speed	rpm	No adjustment is necessary.
Ignition timing (B.T.D.C.)	degree/rpm	
Spark plug		DILKAR8K8G
Spark plug gap (Normal)	in (mm)	0.031 (0.8)
Camshaft operation		Timing chain

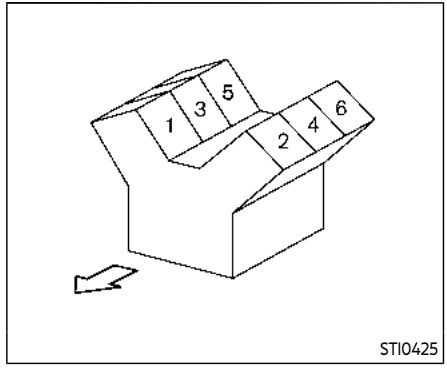

This spark ignition system complies with the Canadian standard ICES-002.

WHEELS AND TIRES

Road wheel

Type	Size	Offset in (mm)
Conventional	19 × 9J	1.57 (40)
	20 × 9J	1.57 (40)
	20 × 9.5J	1.85 (47)

Tire

Type	Size	Pressure PSI (kPa) [Cold]
Conventional	P255/40RF19 96V	35 (240)
	P255/35R20 97V XL	38 (260)
	Front: 255/35R20 97Y XL	41 (280)
	Rear: 275/30R20 97Y XL	38 (260)

Depending on the models, the emergency tire puncture repair kit is supplied.

DIMENSIONS

in (mm)

Overall length	184.4 (4,685)
Overall width	72.8 (1,850)
Overall height	54.9 (1,395) 54.5 (1,385)*1
Front tread	61.2 (1,555)
Rear tread	61.8 (1,570)*2 62.4 (1,585)*3
Wheelbase	112.2 (2,850)

*1: Two-Wheel Drive (2WD) models
*2: 275/30R20 rear tire models
*3: 255/35R20 or 255/40RF19 tire models

WHEN TRAVELING OR REGISTERING IN ANOTHER COUNTRY

If you plan to travel in another country, you should first find out if the fuel available is suitable for your vehicle's engine.

Using fuel with too low an octane rating may cause engine damage. All gasoline vehicles must be operated with unleaded gasoline. Therefore, avoid taking your vehicle to areas where appropriate fuel is not available.

When transferring the registration of your vehicle to another country, state, province or district, it may be necessary to modify the vehicle to meet local laws and regulations.

The laws and regulations for motor vehicle emission control and safety standards vary according to the country, state, province or district; therefore, vehicle specifications may differ.

When any vehicle is to be taken into another country, state, province or district and registered, its modifications, transportation, and registration are the responsibility of the user. INFINITI is not responsible for any inconvenience that may result.

VEHICLE IDENTIFICATION

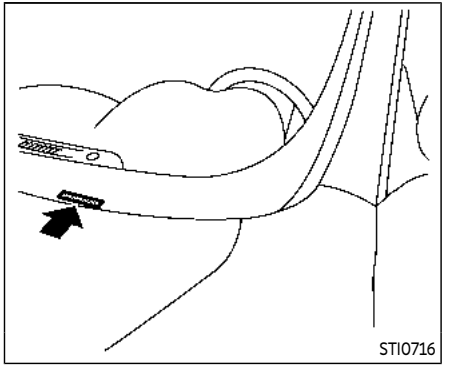

VEHICLE IDENTIFICATION NUMBER (VIN) PLATE

The vehicle identification number plate is attached as shown. This number is the identification for your vehicle and is used in the vehicle registration.

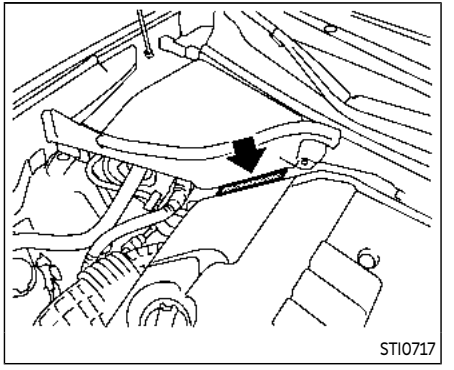

VEHICLE IDENTIFICATION NUMBER (chassis number)

The number is stamped as shown in the engine compartment.

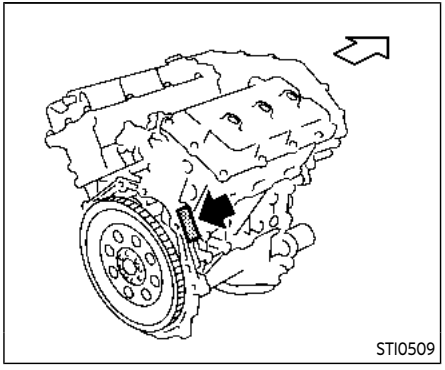

ENGINE SERIAL NUMBER

The number is stamped on the engine as shown.

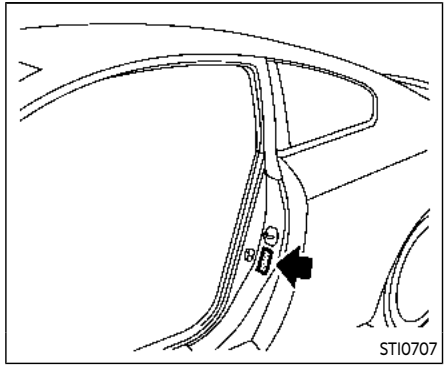

F.M.V.S.S./C.M.V.S.S. CERTIFICATION LABEL

The Federal/Canadian Motor Vehicle Safety Standards (F.M.V.S.S./C.M.V.S.S.) certification label is affixed as shown. This label contains valuable vehicle information, such as: Gross Vehicle Weight Ratings (GVWR), Gross Axle Weight Rating (GAWR), month and year of manufacture, Vehicle Identification Number (VIN), etc. Review it carefully.

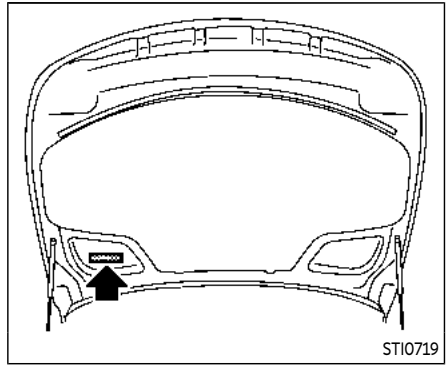

EMISSION CONTROL INFORMATION LABEL

The emission control information label is attached as shown.

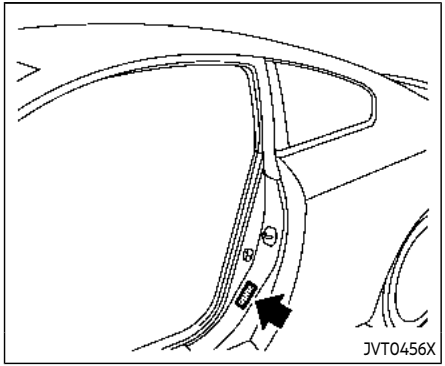

TIRE AND LOADING INFORMATION LABEL

The cold tire pressure is shown on the Tire and Loading Information label affixed to the pillar as illustrated.

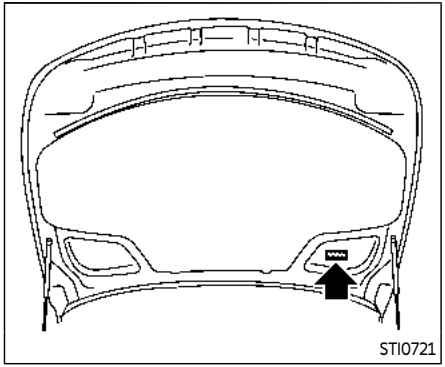

AIR CONDITIONER SPECIFICATION LABEL

The air conditioner specification label is attached as shown.

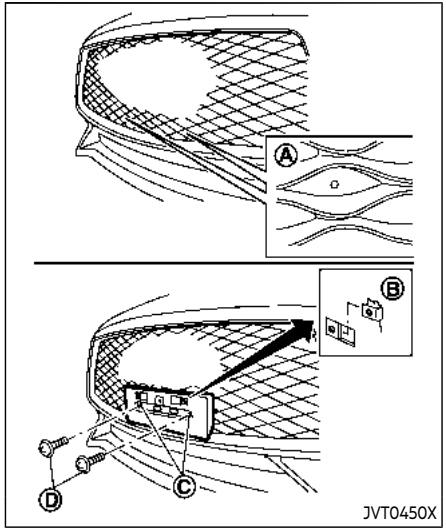

Use the following steps to mount the license plate.

Only use the recommended mounting position, otherwise the radar sensor (Intelligent Cruise Control (ICC) system) (if so equipped) obstruction may result.

Before mounting the license plate, confirm that the following parts are enclosed in the plastic bag.

- License plate bracket
- J-nut × 2
- Screw × 2

1. Park the vehicle on flat, level ground.
2. Locate the two dimples Ⓐ in the front grille.
3. Insert J-nuts Ⓑ into the license plate bracket.
4. Insert the bosses of the license plate bracket into the front grille, aligning the holes Ⓒ with the location marks (two dimples) Ⓐ.
5. Install the license plate bracket with the screws Ⓓ provided.
6. Install the license plate with bolts that are no longer than 0.55 in (14 mm).

REMOVING AIR DEFLECTORS

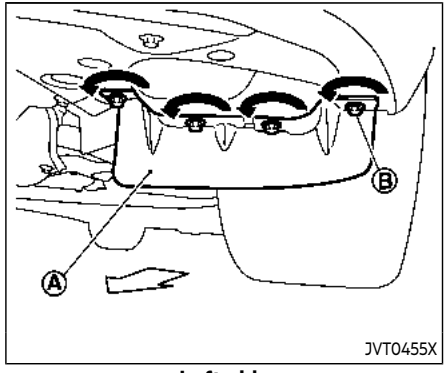

Left side

This vehicle is equipped with air deflectors in front of the front wheels. The deflectors will change the air flow to help improve aerodynamic performance.

When transporting your vehicle on a trailer, the air deflectors may interfere with a steep slope to a trailer bed. In this case, remove the deflectors from the vehicle.

1. Loosen four screws as shown and remove the left-side air deflector Ⓐ.
2. Tighten the removed screw Ⓑ in its original position.
   Tightening torque:
   4 to 6 ft-lb
   (5.6 to 8.4 N·m)
3. Perform the same procedure to remove the right-side air deflector.
4. Store the two air deflectors and six screws to reinstall in the reverse order.
5. When reinstalling, make sure all eight screws are firmly tightened on both air deflectors.
   Tightening torque:
   4 to 6 ft-lb
   (5.6 to 8.4 N·m)

VEHICLE LOADING INFORMATION

WARNING

- **It is extremely dangerous to ride in a cargo area inside the vehicle. In a collision, people riding in these areas are more likely to be seriously injured or killed.**
- **Do not allow people to ride in any area of vehicle that is not equipped with seats and seat belts.**
- **Be sure everyone in your vehicle is in a seat and using a seat belt properly.**

TERMS

It is important to familiarize yourself with the following terms before loading your vehicle:

- Curb Weight (actual weight of your vehicle) - vehicle weight including: standard and optional equipment, fluids, emergency tools, and spare tire assembly. This weight **does not** include passengers and cargo.
- GVW (Gross Vehicle Weight) - curb weight plus the combined weight of passengers and cargo.
- GVWR (Gross Vehicle Weight Rating) - maximum total combined weight of the unloaded vehicle, passengers, luggage, hitch, trailer tongue load and any other optional equipment. This information is located on the F.M.V.S.S./C.M.V.S.S. label.
- GAWR (Gross Axle Weight Rating) - maximum weight (load) limit specified for the front or rear axle. This information is located on the F.M.V.S.S./C.M.V.S.S. label.
- GCWR (Gross Combined Weight Rating) - The maximum total weight rating of the vehicle, passengers, cargo, and trailer.
- Vehicle Capacity Weight, Load limit, Total load capacity - maximum total weight limit specified of the load (passengers and cargo) for the vehicle. This is the maximum combined weight of occupants and cargo that can be loaded into the vehicle. If the vehicle is used to tow a trailer, the trailer tongue weight must be included as part of the cargo load. This information is located on the Tire and Loading Information label.
- Cargo capacity - permissible weight of cargo, the weight of total occupants weight subtracted from the load limit.

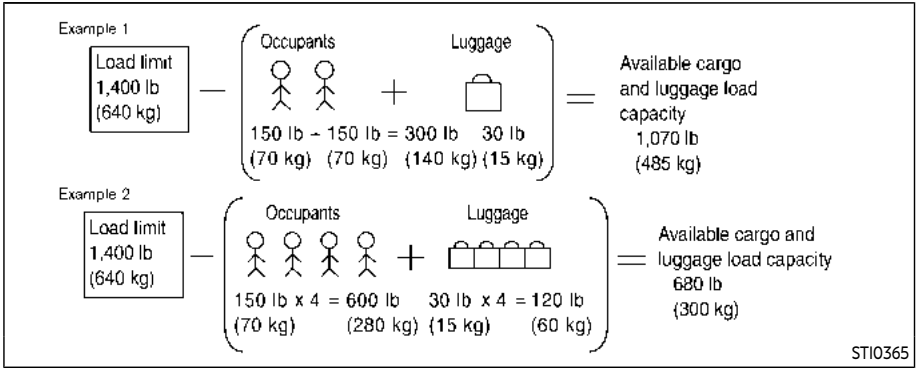

VEHICLE LOAD CAPACITY

Do not exceed the load limit of your vehicle shown as "The combined weight of occupants and cargo" on the Tire and Loading Information label. Do not exceed the number of occupants shown as "Seating Capacity" on the Tire and Loading Information label.

To get "the combined weight of occupants and cargo", add the weight of all occupants, then add the total luggage weight. Examples are shown in the illustration.

Steps for determining correct load limit

1. Locate the statement "The combined weight of occupants and cargo should never exceed XXX kg or XXX lbs" on your vehicle's placard.
2. Determine the combined weight of the driver and passengers that will be riding in your vehicle.
3. Subtract the combined weight of the driver and passengers from XXX kg or XXX lbs.
4. The resulting figure equals the available amount of cargo and luggage load capacity. For example, if the XXX amount equals 1400 lbs. and there will be five 150 lb. passengers in your vehicle, the amount of available cargo and luggage load capacity is 650 lbs. (1400 - 750 (5 x 150) = 650 lbs or 640 - 340 (5 x 70) = 300 kg.)
5. Determine the combined weight of luggage and cargo being loaded on the vehicle. That weight may not safely exceed the available cargo and luggage load capacity calculated in Step 4.
6. If your vehicle will be towing a trailer, load from your trailer will be transferred to your vehicle. Consult this manual to determine how this reduces the available cargo and luggage load capacity of your vehicle.

Before driving a loaded vehicle, confirm that you do not exceed the Gross Vehicle Weight Rating (GVWR) or the Gross Axle Weight Rating (GAWR)

for your vehicle. (See "Measurement of weights" (P.10-17).)

Also check tires for proper inflation pressures. See the Tire and Loading Information label.

LOADING TIPS

- The GVW must not exceed GVWR or GAWR as specified on the F.M.V.S.S./C.M.V.S.S. certification label.
- Do not load the front and rear axle to the GAWR. Doing so will exceed the GVWR.

WARNING

- **Properly secure all cargo to help prevent it from sliding or shifting. Do not place cargo higher than the seatbacks. In a sudden stop or collision, unsecured cargo could cause personal injury.**
- **Do not load your vehicle any heavier than the GVWR or the maximum front and rear GAWRs. If you do, parts of your vehicle can break, tire damage could occur, or it can change the way your vehicle handles. This could result in loss of control and cause personal injury.**
- **Overloading could not only shorten the life of your vehicle and the tires, but also could lead to hazardous vehicle handling and long braking distance. This may cause a premature tire malfunction, which could result in a serious accident and personal injury. Failures caused by overloading are not covered by the vehicle's warranty.**

MEASUREMENT OF WEIGHTS

Secure loose items to prevent weight shifts that could affect the balance of your vehicle. When the vehicle is loaded, drive to a scale and weigh the front and the rear wheels separately to determine axle loads. Individual axle loads should not exceed either of the gross axle weight ratings (GAWR). The total of the axle loads should not exceed the gross vehicle weight rating (GVWR). These ratings are given on the vehicle certification label. If weight ratings are exceeded, move or remove items to bring all weights below the ratings.

Do not tow a trailer with your vehicle.

FLAT TOWING

Towing your vehicle with all four wheels on the ground is sometimes called flat towing. This method is sometimes used when towing a vehicle behind a recreational vehicle, such as a motor home.

CAUTION

- **Failure to follow these guidelines can result in severe transmission damage.**
- **Whenever flat towing your vehicle, always tow forward, never backward.**
- **DO NOT tow any Automatic Transmission (AT) vehicle with all four wheels on the ground (flat towing). Doing so WILL DAMAGE internal transmission parts due to lack of transmission lubrication.**
- **DO NOT tow any All-Wheel Drive (AWD) vehicle with any of the wheels on the ground. Doing so may cause serious and expensive damage to the powertrain.**
- **For emergency towing procedures refer to "Towing recommended by INFINITI" (P.6-15).**

Automatic Transmission

All-Wheel Drive (AWD) models:

Do not tow an AWD vehicle with any of the wheels on the ground.

Two-Wheel Drive (2WD) models:

To tow a vehicle equipped with an automatic transmission, an appropriate vehicle dolly **MUST** be placed under the towed vehicle's drive wheels. **Always** follow the dolly manufacturer's recommendations when using their product.

DOT (Department Of Transportation) Quality Grades: All passenger car tires must conform to federal safety requirements in addition to these grades.

Quality grades can be found where applicable on the tire sidewall between tread shoulder and maximum section width. For example:

Treadwear 200 Traction AA Temperature A

TREADWEAR

The treadwear grade is a comparative rating based on the wear rate of the tire when tested under controlled conditions on a specified government test course. For example, a tire graded 150 would wear one and one-half (1 1/2) times as well on the government course as a tire graded 100. The relative performance of tires depends upon actual conditions of their use, however, and may depart significantly from the norm due to variations in driving habits, service practices and differences in road characteristics and climate.

TRACTION AA, A, B AND C

The traction grades, from highest to lowest, are AA, A, B and C. Those grades represent the tire's ability to stop on wet pavement as measured under controlled conditions on specified government test surfaces of asphalt and concrete. A tire marked C may have poor traction performance.

WARNING

The traction grade assigned to this tire is based on straight-ahead braking traction tests, and does not include acceleration, cornering, hydroplaning, or peak traction characteristics.

TEMPERATURE A, B AND C

The temperature grades A (the highest), B, and C, representing the tire's resistance to the generation of heat and its ability to dissipate heat when tested under controlled conditions on a specified indoor laboratory test wheel. Sustained high temperature can cause the material of the tire to degenerate and reduce tire life, and excessive temperature can lead to sudden tire failure. The grade C corresponds to a level of performance which all passenger car tires must meet under the Federal Motor Vehicle Safety Standard No. 109. Grades B and A represent higher levels of performance on the laboratory test wheel than the minimum required by law.

WARNING

The temperature grade for this tire is established for a tire that is properly inflated and not overloaded. Excessive speed, under-inflation, or excessive loading, either separately or in combination, can cause heat build-up and possible tire failure.

EMISSION CONTROL SYSTEM WARRANTY

Your INFINITI is covered by the following emission warranties.

For USA:

- Emission Defects Warranty
- Emissions Performance Warranty

Details of these warranties may be found with other vehicle warranties in your Warranty Information Booklet that comes with your INFINITI. If you did not receive a Warranty Information Booklet, or it has become lost, you may obtain a replacement by writing to:

- INFINITI Division
  Nissan North America, Inc.
  Consumer Affairs Department
  P.O. Box 685003
  Franklin, TN 37068-5003

For Canada:

Emission Control System Warranty

Details of these warranties may be found with other vehicle warranties in your Warranty and Roadside Assistance Information that comes with your INFINITI. If you did not receive a Warranty and Roadside Assistance Information, or it has become lost, you may obtain a replacement by writing to:

- Nissan Canada Inc.
  5290 Orbitor Drive
  Mississauga, Ontario,
  L4W 4Z5

For USA

If you believe that your vehicle has a defect which could cause a crash or could cause injury or death, you should immediately inform the National Highway Traffic Safety Administration (NHTSA) in addition to notifying INFINITI.

If NHTSA receives similar complaints, it may open an investigation, and if it finds that a safety defect exists in a group of vehicles, it may order a recall and remedy campaign. However, NHTSA cannot become involved in individual problems between you, your retailer, or INFINITI.

To contact NHTSA, you may call the Vehicle Safety Hotline toll-free at 1-888-327-4236 (TTY: 1-800-424-9153); go to http://www.safercar.gov; or write to: Administrator, NHTSA, 400 Seventh Street, SW., Washington DC 20590. You can also obtain other information about motor vehicle safety from http://www.safercar. gov.

You may notify INFINITI by contacting our Consumer Affairs Department, toll-free, at 1-800-662-6200.

For Canada

If you believe that your vehicle has a defect which could cause a crash or could cause injury or death, you should immediately inform Transport Canada in addition to notifying INFINITI.

If Transport Canada receives complaints, it may open an investigation, and if it finds that a safety defect exists in a group of vehicles, it may request that INFINITI conduct a recall campaign. However, Transport Canada cannot become involved in individual problems between you, your retailer, or INFINITI.

You may contact Transport Canada's Defect Investigations and Recalls Division toll free at 1-800-333-0510. You may also report safety defects online at:

https://wwwapps.tc.gc.ca/Saf-Sec-Sur/7/PCDB-BDPP/fc-cp.aspx?lang=eng (English speakers) or https://

wwwapps.tc.gc.ca/Saf-Sec-Sur/7/PCDB-BDPP/fc-cp.aspx?lang=fra (French speakers).

Additional information concerning motor vehicle safety may be obtained from Transport Canada's Road Safety Information Centre at 1-800-333-0371 or online at www.tc.gc.ca/ roadsafety (English speakers) or www.tc.gc.ca/securiteroutiere (French speakers).

To notify INFINITI of any safety concerns please contact our Consumer Information Centre toll free at 1-800- 361-4792.

READINESS FOR INSPECTION/ MAINTENANCE (I/M) TEST (US only)

WARNING

A vehicle equipped with Intelligent All-Wheel Drive (AWD) should never be tested using a two wheel dynamometer (such as the dynamometers used by some states for emissions testing), or similar equipment. Make sure you inform test facility personnel that your vehicle is equipped with AWD before it is placed on a dynamometer. Using the wrong test equipment may result in transmission damage or unexpected vehicle movement which could result in serious vehicle damage or personal injury.

Due to legal requirements in some states/ areas, your vehicle may be required to be in what is called the "ready condition" for an Inspection/Maintenance (I/M) test of the emission control system.

The vehicle is set to the "ready condition" when it is driven through certain driving patterns. Usually, the "ready condition" can be obtained by ordinary usage of the vehicle.

If a powertrain system component is repaired or the battery is disconnected, the vehicle may be reset to a "not ready condition". Before taking the I/M test, check the vehicle's inspection/maintenance test readiness condition. Place the ignition switch in the ON position without starting the engine. If the Malfunction Indicator Light (MIL) comes on steady for 20 seconds and then blinks for 10 seconds, the I/M test condition is "not ready". If the MIL does not blink after 20 seconds, the I/M test condition is "ready".

It is recommended you visit an INFINITI retailer to set the "ready condition" or to prepare the vehicle for testing.

EVENT DATA RECORDERS (EDR)

This vehicle is equipped with an Event Data Recorder (EDR). The main purpose of an EDR is to record, in certain crash or near crash-like situations, such as an air bag deployment or hitting a road obstacle, data that will assist in understanding how a vehicle's systems performed. The EDR is designed to record data related to vehicle dynamics and safety systems for a short period of time, typically 30 seconds or less. The EDR in this vehicle is designed to record such data as:

- How various systems in your vehicle were operating;
- Whether or not the driver and passenger safety belts were buckled/fastened;
- How far (if at all) the driver was depressing the accelerator and/or brake pedal; and,
- How fast the vehicle was traveling.
- Sounds are not recorded.

These data can help provide a better understanding of the circumstances in which crashes and injuries occur.

NOTE: EDR data are recorded by your vehicle only if a nontrivial crash situation occurs; no data are recorded by the EDR under normal driving conditions and no personal data (e.g. name, gender, age and crash location) are recorded. However, other parties, such as law enforcement, could combine the EDR data with the type of personally identifying data routinely acquired during a crash investigation.

To read data recorded by an EDR, special equipment is required and access to the vehicle or the EDR is needed. In addition to the vehicle manufacturer and INFINITI retailer, other parties, such as law enforcement, that have the special equipment, can read the information if they have access to the vehicle or the EDR. EDR data will only be accessed with the consent of the vehicle owner or lessee or as otherwise required or permitted by law.

OWNER'S MANUAL/SERVICE MANUAL ORDER INFORMATION

Genuine INFINITI Service Manual for this model year and prior can be purchased. A genuine INFINITI Service Manual is the best source of service and repair information for your vehicle. This manual is the same one used by the factory-trained technicians working at INFINITI retailers. Genuine INFINITI Owner's Manuals can also be purchased.

For USA:

For current pricing and availability of genuine **INFINITI Service Manuals**, contact:

www.infiniti-techinfo.com

For current pricing and availability of genuine **INFINITI Owner's Manuals**, contact:

1-800-247-5321

For Canada:

To purchase a copy of a genuine INFINITI Service Manual or Owner's Manual for this model year and prior, contact an INFINITI retailer. For the phone number and location of an INFINITI retailer in your area call the INFINITI Satisfaction Center at 1-800-361-4792 and a bilingual INFINITI representative will assist you.

11 Index

A

ABS (Anti-lock Braking System) 5-127
Active Lane Control 5-25
Active noise cancellation 5-138
Active sound enhancement 5-138
Active trace control 5-130
Air bag system
  Front-seat mounted side-impact supplemental air bag system 1-52
  Roof-mounted curtain side-impact and rollover supplemental air bag system 1-52
Air bag warning labels 1-55
Air bag warning light 1-55, 2-17
Air cleaner housing filter 8-15
Air conditioner
  Air conditioner operation 4-34
  Air conditioner service 4-41
  Air conditioner specification label 10-13
  Air conditioning system refrigerant and lubricant recommendations 4-41, 10-7
  Automatic air conditioner 4-36
  Heater and air conditioner 4-34
  Servicing air conditioner 4-41
  Sync mode setting 4-39
Air deflectors 10-14
Alarm
  How to stop alarm (see vehicle security system) 2-33
Alcohol, drugs and driving 5-10
Antenna 4-42
Anti-lock Braking System (ABS) 5-127
Appearance care
  Exterior appearance care 7-2
  Interior appearance care 7-5
Around View® Monitor 4-11
Audible reminders 2-19
Autolight system 2-38
Automatic
  Automatic adjusting function (power windows) 2-54
  Automatic air conditioner 4-36
  Automatic Transmission Fluid (ATF) 8-9
  Driving with Automatic Transmission (AT) 5-16
Automatic door locks 3-5
Automatic drive positioner 3-33
Automatic seat positioner 3-33
Avoiding collision and rollover 5-9

B

Back-up Collision Intervention (BCI) 5-57
Battery 8-11
  Battery replacement, Intelligent Key 3-2
  Battery saver system 2-41
  Intelligent Key 8-19
  Variable voltage control system 8-13
Before starting the engine 5-14
Belts (See drive belts) 8-13
Blind Spot Intervention® (BSI) 5-45
Blind Spot Warning (BSW) 5-37
Brake
  Anti-lock Braking System (ABS) 5-127
  Brake fluid 8-9
  Brake force distribution 5-129
  Brake system 5-126
  Parking brake operation 5-20
Brake warning light 2-13
Break-in schedule 5-119
Bulb check/instrument panel 2-12
Bulb replacement 8-22

C

Camera aiding sonar function 4-24
Capacities and recommended fluids/lubricants 10-2
Car phone or CB radio 4-42
Card holder 2-51
Catalytic converter
  Three-way catalyst 5-5
Center ventilators 4-34
Chassis control 5-132
Check tire pressure warning 2-24
Checking intercooler coolant level 8-6
Child restraints 1-19
  LATCH system 1-21
  Precautions on child restraints 1-19
Child safety 1-17

Chimes
Audible reminders 2-19
Seat belt warning light and chime 2-17
Circuit breaker
Fusible link 8-18
Cleaning exterior and interior 7-2, 7-5
Climate control
Automatic air conditioner 4-36
Clock 2-31
Coat hooks 2-51
Cockpit 2-3
Cold weather driving 5-135
Compass 2-9
Console box 2-50
Coolant
Capacities and
recommended fluids/lubricants 10-2
Changing engine coolant 8-5
Checking engine coolant level 8-4
Corrosion protection 7-8
Courtesy light 2-59
Cruise control 5-66
Fixed speed cruise control (on
ICC system) 5-85
Intelligent Cruise Control (ICC) 5-68
Cruise indicator 2-25
Cup holders 2-48
Current fuel consumption 2-29

D

Daytime running light system 2-42
Defroster switch
Rear window and outside mirror
defroster switch 2-37
Dimensions 10-10
Direct Adaptive Steering 5-124
Distance Control Assist (DCA) 5-89
Distance to empty 2-29
Drive belts 8-13
Drive positioner 3-33
Driver assist system indicator 2-25
Driving
Cold weather driving 5-135
Driving with Automatic
Transmission (AT) 5-16
Precautions when starting and driving 5-4

E

ECO drive indicator light 2-18
ECO mode 5-22
ECO pedal system 5-22
Economy
Fuel 5-120
Elapsed time 2-29
Elapsed time and trip odometer 2-29
Emergency tire puncture repair kit 6-5
Emission control information label 10-12
Emission control system warranty 10-19
Engine
Before starting the engine 5-14
Break-in schedule 5-119
Capacities and
recommended fluids/lubricants 10-2
Changing engine coolant 8-5
Changing engine oil and filter 8-7
Checking engine coolant level 8-4
Checking engine oil level 8-6
Coolant temperature gauge 2-8
Emergency engine shut off 5-13
Engine block heater 5-136
Engine compartment check locations 8-3
Engine cooling system 8-3
Engine oil 8-6
Engine oil and filter
replacement indicator 2-27
Engine oil and oil
filter recommendation 10-6
Engine serial number 10-12
Engine specifications 10-8
Engine start operation indicator 2-23
If your vehicle overheats 6-13
Intercooler cooling system 8-5
Remote engine start 3-19
Remote engine start
operation indicator 2-23
Starting the engine 5-15
Engine coolant temperature gauge 2-8
Entry/exit function
Automatic drive positioner 3-33

Event Data Recorders (EDR) 10-22
Exhaust gas (carbon monoxide) 5-4
Explanation of scheduled maintenance items 9-5

F

F.M.V.S.S./C.M.V.S.S. certification label 10-12
Filter
- Air cleaner housing filter 8-15
- Changing engine oil and filter 8-7

Flashers (See hazard warning flasher switch) 6-2
Flat tire 6-3
- Repairing flat tire (with emergency tire puncture repair kit) 6-5

Flat Tire - Visit dealer warning 2-24
Flat towing 10-18
Floor mat cleaning 7-6
Floor mat installation 7-6
Fluid
- Automatic Transmission Fluid (ATF) 8-9
- Brake fluid 8-9
- Capacities and recommended fluids/lubricants 10-2
- Engine coolant 8-3
- Engine oil 8-6
- Intercooler coolant 8-5
- Window washer fluid 8-10

Fog light switch 2-44
Forward Emergency Braking (FEB) system warning light 2-13
Forward Emergency Braking (FEB) with pedestrian detection system 5-100
Front passenger air bag and status light 1-46
Front power seat adjustment 1-3
Front seat
- Front seat adjustment 1-3

Fuel
- Capacities and recommended fluids/lubricants 10-2
- Fuel economy 5-120
- Fuel information 10-4
- Fuel octane rating 10-4
- Fuel-filler cap 3-25
- Fuel-filler door 3-25
- Gauge 2-9

Fuel Efficient Driving Tips 5-119
Fuses 8-17
Fusible links 8-18

G

Garage door opener
- HomeLink® Universal Transceiver 2-59

Gas cap 3-25
Gauge 2-6
- Engine coolant temperature gauge 2-8
- Fuel gauge 2-9
- Odometer 2-7
- Speedometer 2-7
- Tachometer 2-8
- Trip computer 2-29

General maintenance 9-2
Glove box 2-50

H

Hazard warning flasher switch 6-2
Head restraints/headrests 1-7
Headlights
- Aiming control (See Adaptive Front lighting System (AFS)) 2-42
- Headlight switch 2-38

Heated seats 2-45
Heated steering wheel 2-47
Heater
- Engine block heater 5-136

Heater and air conditioner 4-34
High beam assist 2-39
Hill start assist system 5-132
HomeLink® Universal Transceiver 2-59
Hood release 3-22
Hook
- Coat hooks 2-51
- Trunk hooks 2-52

Horn 2-44

I

Ignition switch
- (Push-button) 5-11

Immobilizer system 2-33
Indicator
- Lights 2-18
- Vehicle information display 2-20

Indicator lights 2-18
Indicators for operation (vehicle information display) 2-23
INFINITI Drive Mode Selector 5-21
INFINITI InTouch Owner's Manual 4-2
INFINITI Vehicle Immobilizer System 2-33
Engine start 2-33
Inside mirror 3-29
Inspection/maintenance (I/M) test 10-21
Instrument brightness control 2-43
Instrument panel 2-5
Intelligent All-Wheel Drive (AWD) 5-121
Intelligent Cruise Control (ICC) 5-68
Intelligent Cruise Control (ICC) system ON indicator 2-25
Intelligent Key 3-2
Intelligent Key system 3-6
Battery replacement 8-19
Key operating range 3-8
Key operation 3-9
Warning signals 3-13
Intercooler cooling system 8-5
Interior light control switch 2-57
Interior light replacement 8-23
Interior lights 2-57
Interior trunk lid release 3-24
ISOFIX child restraint 1-21

J

Jump starting 6-10

K

Keyless entry (See remote keyless entry system) 3-15
Keys 3-2
For Intelligent Key system 3-6

L

Labels
Air bag warning labels 1-55
Air conditioner specification label 10-13
Emission control information label 10-12
Engine serial number 10-12
F.M.V.S.S./C.M.V.S.S. certification label 10-12
Tire and Loading information label 8-27, 10-13
Vehicle identification number (VIN) 10-11
Lane Departure Warning (LDW) 5-33
LATCH system 1-21
License plate
Installing front license plate 10-13
Light
Air bag warning light 1-55
Bulb replacement 8-22
Fog light switch 2-44
Headlight switch 2-38
Indicator lights 2-18
Interior light control switch 2-57
Interior lights 2-57
Map lights 2-57
Replacement 8-22
Trunk light 2-59
Vanity mirror lights 2-58
Warning/indicator lights and audible reminders 2-12
Lights
Exterior and interior light replacement 8-23
Loading information (See vehicle loading information) 10-15
Lock
Automatic door locks 3-5
Door locks 3-4
Power door lock 3-4
Trunk lid 3-22
Locking with mechanical key 3-4
Log-in function 3-15
Loose Fuel Cap warning 2-24, 3-27
Low fuel warning light 2-14
Low outside temperature warning 2-25
Low tire pressure warning light 2-14
Low tire pressure warning system (See Tire Pressure Monitoring System (TPMS)) 5-5, 6-3, 8-25

M

Maintenance
Battery 8-11

General maintenance 9-2
Indicators for maintenance (vehicle information display) 2-26
Inside the vehicle 9-3
Maintenance log 9-11
Maintenance precautions 8-2
Maintenance requirements 9-2
Maintenance schedules 9-6
Maintenance under severe driving conditions 9-10
Outside the vehicle 9-2
Seat belt maintenance 1-17
Standard maintenance 9-7
Under the hood and vehicle 9-4
Malfunction indicator light (MIL) 2-18
Map lights 2-57
Master warning light 2-16
Mechanical key (Intelligent Key system) 3-3
Memory storage
Automatic drive positioner 3-33
Meter
Trip computer 2-29
Meters and gauges 2-6
Instrument brightness control 2-43
Mirror
Inside mirror 3-29
Outside mirrors 3-31
Vanity mirror 3-32
Monitor
Around View® Monitor 4-11
RearView Monitor 4-3
Moonroof 2-55
Moving Object Detection (MOD) 4-29

N

New vehicle break-in 5-119

O

Odometer 2-7
Off-road recovery 5-9
Oil
Capacities and recommended fluids/lubricants 10-2
Changing engine oil and filter 8-7
Checking engine oil level 8-6
Engine oil 8-6
One touch unlock sensor (See Intelligent Key system) 3-9
Operation
Indicators for operation 2-23
Outside air temperature 2-31
Outside mirrors 3-31
Overheat, If your vehicle overheats 6-13
Owner's Manual/Service Manual order information 10-22

P

Panic alarm 3-17
Parking
Parking brake operation 5-20
Parking on hills 5-123
Parking brake break-in 5-127
PERSONAL mode 5-24
Phone
Car phone or CB radio 4-42
Power
Power door lock 3-4
Power outlet 2-47
Power steering system 5-124
Power windows 2-52
Power moonroof 2-55
Power steering warning light 2-16
Pre-crash seat belts with comfort function 1-13
Precautions
Braking precautions 5-126
Child restraints 1-19
Cruise control 5-66
Maintenance 8-2
Seat belt usage 1-11
Supplemental restraint system 1-38
When starting and driving 5-4
Predictive Forward Collision Warning (PFCW) 5-110
Push starting 6-12
Push-button ignition switch 5-11

R

Radio
Car phone or CB radio 4-42
Rain-sensing auto wiper system 2-36

Rapid air pressure loss 5-10
Readiness for inspection/maintenance (I/M) test (US only) 10-21
Rear seats 1-6
Rear window and outside mirror defroster switch 2-37
RearView Monitor 4-3
Recorders
  Event data 10-22
Registering your vehicle in another country 10-11
Remote engine start 3-19
Remote keyless entry system 3-15
Repairing flat tire (with emergency tire puncture repair kit) 6-5
Reporting safety defects 10-20
Request switch (See Intelligent Key system) 3-9
Roadside assistance program 6-2
Rollover 5-9
Roof
  Moonroof 2-55
Run-flat tires 6-4

S

Safety
  Child seat belts 1-17
  Reporting safety defects 10-20
Seat adjustment
  Front power seat adjustment 1-3
  Front seats 1-3
Seat belt(s)
  Child safety 1-17
  Infants 1-18
  Injured persons 1-13
  Larger children 1-18
  Pre-crash seat belts with comfort function 1-13
  Precautions on seat belt usage 1-11
  Pregnant women 1-13
  Seat belt cleaning 7-7
  Seat belt extenders 1-16
  Seat belt maintenance 1-17
  Seat belt warning light and chime 2-17
  Seat belts 1-11
  Seat belts with pretensioners 1-54
  Small children 1-18
  Three-point type 1-14
Seat(s)
  Driver-side memory 3-33
  Heated seats 2-45
  Seats 1-2
Security system
  Vehicle security system 2-32
Security system (INFINITI Vehicle Immobilizer System)
  Engine start 2-33
Servicing air conditioner 4-41
Shift lever
  Shift lock release 5-19
Shift lock release, Transmission 5-19
Shifting
  Automatic Transmission (AT) 5-16
Side ventilators 4-34
SNOW mode 5-22
Sonar settings 5-134
Sonar system 5-133
  Camera aiding sonar function (models with Around View® Monitor) 4-24
Spare tire 10-9
Spark plugs 8-14
Speedometer 2-7
SPORT mode 5-22
SPORT+ mode 5-22
Standard maintenance 9-7, 9-8
STANDARD mode 5-22
Starting
  Before starting the engine 5-14
  Jump starting 8-13
  Precautions when starting and driving 5-4
  Push starting 6-12
  Starting the engine 5-15
Status light, Front passenger air bag 1-46
Steering
  Direct Adaptive Steering 5-124
  Heated steering wheel 2-47
  Power steering system 5-124
  Tilt/telescopic steering 3-27
Storage 2-48
Storage box 2-51
Sun visors 3-29
Sunglasses holder 2-49

Supplemental air bag warning labels 1-55
Supplemental air bag warning light 1-55, 2-17
Supplemental restraint system 1-38
Precautions on supplemental restraint system 1-38
Switch
Autolight switch 2-38
Fog light switch 2-44
Hazard warning flasher switch 6-2
Headlight switch 2-38
Power door lock switch 3-5
Push-button ignition switch 5-11
Rear window and outside mirror defroster switch 2-37
Turn signal switch 2-43
Vehicle Dynamic Control (VDC) off switch 2-45

T

Tachometer 2-8
Temperature gauge
Engine coolant temperature gauge 2-8
Theft (INFINITI Vehicle Immobilizer System)
Engine start 2-33
Three-way catalyst 5-5
Tilt/telescopic steering 3-27
Tire
Flat Tire - Visit dealer warning 2-24
Run-flat tires 6-4
Sealant 6-5
Tire replacement indicator 2-27
Tire rotation 8-33
Tire pressure
Low tire pressure warning light 2-14
Tire Pressure Low - Add Air warning 2-24
Tires
Emergency tire puncture repair kit 6-5
Flat tire 6-3
Low tire pressure warning system 5-5, 6-3, 8-25
Run-flat tires 8-31
Tire and Loading information label 8-27, 10-13
Tire chains 8-33
Tire dressing 7-4
Tire pressure 8-25
Tire Pressure Monitoring System (TPMS) 5-5, 6-3, 8-25
Types of tires 8-31
Uniform tire quality grading 10-18
Wheel/tire size 10-9
Wheels and tires 8-25
Towing
Flat towing 10-18
Tow truck towing 6-14
Towing a trailer 10-18
TPMS
Tire Pressure Monitoring System 5-5, 6-3, 8-25
TPMS, Tire pressure monitoring system
TPMS with Tire Inflation Indicator 5-8
Trailer towing 10-18
Transceiver
HomeLink® Universal Transceiver 2-59
Transmission
Automatic Transmission Fluid (ATF) 8-9
Driving with Automatic Transmission (AT) 5-16
Transmission shift lever lock release 5-19
Transmitter (See remote keyless entry system) 3-15
Traveling or registering in another country 10-11
Trip computer 2-29
Trip odometer 2-29
Trunk
Interior trunk lid release 3-24
Light 2-59
Trunk hooks 2-52
Trunk lid 3-22
Trunk lid release switch 3-23
Trunk open request switch 3-23
Trunk release power cancel switch 3-24
Turn signal switch 2-43

U

Underbody cleaning 7-3
Uniform tire quality grading 10-18

V

Vanity mirror 3-32
Vanity mirror lights 2-58

Variable voltage control system 8-13
Vehicle
Dimensions 10-10
Recovery (freeing a stuck vehicle) 6-16
Vehicle Dynamic Control (VDC) off switch 2-45
Vehicle Dynamic Control (VDC) system 5-129
Vehicle Dynamic Control (VDC) warning light 2-17
Vehicle identification number (VIN) 10-11
Vehicle information display 2-20
Vehicle loading information 10-15
Vehicle security system 2-32
Vehicle speedAverage speed 2-29
Ventilators 4-34

W

Walk-in mechanism 1-5
Warning
Flat Tire - Visit dealer warning 2-24
Hazard warning flasher switch 6-2
Indicators for operation (vehicle information display) 2-23
Lights 2-12
Power steering warning light 2-16
Predictive Forward Collision Warning (PFCW) 5-110
Tire Pressure Monitoring System (TPMS) 5-5, 6-3, 8-25
Vehicle information display 2-20
Warning lights, indicator lights and audible reminders 2-12
Warning labels
Air bag warning labels 1-55
Warning light
Air bag warning light 1-55, 2-17
Anti-lock braking system (ABS) warning light 2-12
Brake warning light 2-13
Forward Emergency Braking (FEB) system warning light 2-13
Low fuel warning light 2-14
Low tire pressure warning light 2-14
Seat belt warning light and chime 2-17
Warranty
Emission control system warranty 10-19
Washer switch
Wiper and washer switch 2-34
Washing 7-2
Waxing 7-2
Welcome light and farewell light function 3-10
Wheel/tire size 10-9
Wheels and tires 8-25
Care of wheels 7-3
Cleaning aluminum alloy wheels 7-3
Cleaning bright wheels 7-4
Window washer fluid 8-10
Window(s)
Automatic adjusting function 2-54
Cleaning 7-3
Power windows 2-52
Wiper
Rain-sensing auto wiper system 2-36
Wiper and washer switch 2-34
Wiper blades 8-15
Wiper and washer switch 2-34

MEMO

MEMO

MEMO

MEMO

MEMO

FUEL INFORMATION

Use unleaded premium gasoline with an octane rating of at least 91 AKI (Anti-Knock Index) number (Research octane number 96).

INFINITI recommends the use of unleaded premium gasoline with 93 AKI number (Research octane number 98) to obtain the maximum vehicle performance and the best driveability.

If unleaded premium gasoline is not available, unleaded regular gasoline with an octane rating of at least 87 AKI number (Research octane number 91) may be temporarily used, but only under the following precautions:

- Have the fuel tank filled only partially with unleaded regular gasoline, and fill up with unleaded premium gasoline as soon as possible.
- Avoid full throttle driving and abrupt acceleration.

Use unleaded premium gasoline for maximum vehicle performance.

CAUTION

- **Using a fuel other than that specified could adversely affect the emission control system, and may also affect warranty coverage.**
- **Under no circumstances should a leaded gasoline be used, because this will damage the three-way catalyst.**
- **Do not use a fuel containing more than 15% ethanol. Your vehicle is not designed to run on a fuel containing more than 15% ethanol. Using a fuel containing more than 15% ethanol in a vehicle not specifically designed for a fuel containing more than 15% ethanol can adversely affect the emission control devices and systems of the vehicle. Damage caused by such fuel is not covered by the INFINITI new vehicle limited warranty.**
- **Do not use fuel that contains the octane booster methylcyclopentadienyl manganese tricarbonyl (MMT). Using fuel containing MMT may adversely affect vehicle performance and vehicle emissions. Not all fuel dispensers are labeled to indicate MMT content, so you may have to consult your gasoline retailer for more details. Note that Federal and California laws prohibit the use of MMT in reformulated gasoline.**
- **U.S. government regulations require ethanol dispensing pumps to be identified by a small, square, orange and black label with the common abbreviation or the appropriate percentage for that region.**

ENGINE OIL RECOMMENDATION:

See “Capacities and recommended fluids/lubricants” (P.10-2) for engine oil and oil filter recommendation.

COLD TIRE PRESSURES:

The label is typically located on the driver side center pillar or on the driver’s door. For additional information, see “Wheels and tires” (P.8-25).

NEW VEHICLE BREAK-IN PROCEDURES RECOMMENDATION:

During the first 1,200 miles (2,000 km) of vehicle use, follow the recommendations outlined in the “Break-in schedule” (P.5-119) of this Owner’s Manual. Follow these recommendations for the future reliability and economy of your new vehicle.

Printing : September 2019
Publication No.: OM20E0 CV37U0
Printed in the U.S.A.

CV37-D