www.carburetor-manual.com

Would you like some Free Manuals?

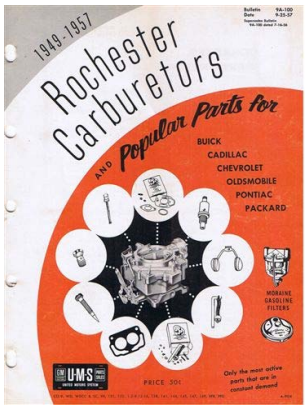

http://carburetor-manual.com/free-shop-manual-club-t-13.html

Also visit http://freeshopmanual.com for more Free Manuals

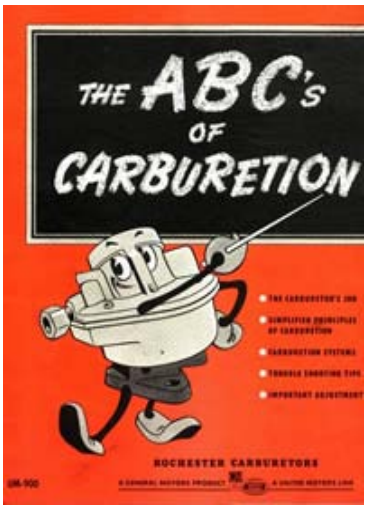

Also Visit my website for 7 FREE Download Manuals starting with this one.

"The ABC's of Carburetion"

Click Here Now

Introductory Information

Ford's Commitment to You

Our Guiding Principles

- ❑ **Quality comes first.** For your satisfaction, the quality of our products and services must be our number one priority.
- ❑ **You are the focus of everything we do.** Our work must be done with you in mind, providing better products and services than our competition.
- ❑ **Continuous improvement is essential to our success.** We must strive for excellence in everything we do: in our products — in their safety and value — and in our services, our human relations, our competitiveness, and our profitability.
- ❑ **Employee involvement is our way of life**. We are a team. We must treat one another with trust and respect.
- ❑ **Dealers and suppliers are our partners.** We must maintain mutually beneficial relationships with dealers, suppliers, and our other business associates.
- ❑ **Integrity is never compromised.** Our conduct worldwide must be pursued in a manner that is socially responsible and commands respect

Downloaded from www.Manualslib.com manuals search engine

Things to Know About Using This Guide

Congratulations on the purchase of your new vehicle. This guide has information about the equipment and the options for your new vehicle. You may not have bought all of the options available to you. If you do not know which information applies to your vehicle, talk to your dealer.

This guide describes equipment and gives specifications for equipment that was in effect when this guide was approved for printing. Ford may discontinue models or change specifications or design without any notice and without incurring obligation.

NOTES and WARNINGS

NOTES give you additional information about the subject matter you are referencing.

WARNINGS remind you to be especially careful in those areas where carelessness can cause damage to your vehicle or personal injury to yourself, your passengers or other people. Please read all **WARNINGS** carefully.

⚠**WARNING**

Finding Information in This Guide

After you have read this guide once, you will

Downloaded from www.Manualslib.com manuals search engine

The **Quick Index** at the end of the book provides a page number following each item which indicates where detailed information can be found.

To use the **Index**, turn to the back of the book and search in the alphabetical listing for the word that best describes the information you need. If the word you chose is not listed, think of other related words and look them up. We have designed the Index so that you can find information under a technical term.

Canadian Owners — French Version

French Owner Guides can be obtained from your dealer or by writing to Ford Motor Company of Canada, Limited, Service Publications, P.O. Box 1580, Station B, Mississauga, Ontario L4Y 4G3.

Your Maintenance Schedule and Record Booklet

The *Maintenance Schedule and Record* booklet lists the services that are most important for keeping your vehicle in good condition. A record log is also provided to help you keep track of all services performed.

About the Warranties

Your vehicle is covered by three types of warranties: **Basic Vehicle Warranty, Extended Warranties** on certain parts, and **Emissions Warranties.**

Read your *Warranty Information Booklet* carefully

Downloaded from www.Manualslib.com manuals search engine

If you lose your *Warranty Information Booklet*, you can get a new one free of charge. Contact any Ford or Lincoln-Mercury dealer, or refer to the addresses and phone numbers on the first page of this owner guide.

Buying a Ford Extended Service Plan

If you bought your vehicle in the U.S., you can buy a Ford Extended Service Plan for your vehicle. This optional contract provides service protection for a longer period of time than the basic warranty that comes with your vehicle.

You do not have to buy this option when you buy your vehicle. However, your option to purchase the Ford Extended Service Plan runs out after 18 months or 18,000 miles. See your dealer for more details about the Ford Extended Service Plan.

If you purchased a Canadian vehicle and did not take advantage of the Ford Extended Service Plan at the time of purchase, you may still be eligible. See your dealer for the details.

Breaking Your Vehicle In

Your new vehicle goes through an adjustment or break-in period during the first 1,000 miles (1,600 km) that you drive it. During the break-in period, you need to pay careful attention to how you drive your vehicle.

- ❑ **Avoid sudden stops.** Because your vehicle has new brake linings, you should take these steps:
  - Watch traffic carefully so that you can

Downloaded from www.Manualslib.com manuals search engine

The break-in period for new brake linings lasts for 100 miles (160 km) of city driving or 1,000 miles (1,600 km) of highway driving.

- **Use only the type of engine oil that Ford recommends.** See *Engine oil recommendations* in the Index. Do not use special "break-in" oils.

Your vehicle is equipped with an Electronic Powertrain Control Module that limits engine and/or vehicle speeds with a cut-out mode to promote durability.

Cleaning the Outside of Your Vehicle

Pollen, bird droppings and tree sap can damage the paint, especially in hot weather. Wash your vehicle as often as necessary to keep it clean.

Take similar precautions if your vehicle is exposed to chemical industrial fallout.

Paint damage resulting from fallout is not related to a defect in paint materials or workmanship and therefore is not covered by warranty. Ford, however, believes that continual improvement in customer satisfaction is a high priority. For this reason, Ford has authorized its dealers to repair, at no charge to the owner, the surfaces of new vehicles damaged by environmental fallout within 12 months or 12,000 miles (20,000 km) of purchase, whichever comes first. Customers may be required to bring their vehicle in for inspection by a Ford representative.

Downloaded from www.Manualslib.com manuals search engine

Washing and Polishing Your Vehicle

Wash the outside of your vehicle, including the underside, with a mild detergent.

DO NOT:

- ❑ Wash your vehicle with hot water
- ❑ Wash your vehicle while it sits in direct sunlight
- ❑ Wash your vehicle while the body is hot

Polish your vehicle to remove harmful deposits and protect the finish.

Cleaning Chrome and Aluminum Parts

Wash chrome and aluminum parts with a mild detergent. Do not use steel wool, abrasive cleaners, fuel, or strong detergents.

Cleaning Plastic Parts

Some of your vehicle's exterior trim parts are plastic. Clean with a tar and road oil remover if necessary. Use a vinyl cleaner for routine cleaning.

Do not clean plastic parts with thinners, solvents or petroleum-based cleaners.

If you have your vehicle rustproofed, remove oversprayed rustproofing with a tar and road oil remover. If rustproofing is not removed from plastic and rubber parts, it can cause deterioration.

Downloaded from www.Manualslib.com manuals search engine

Safety Restraints

Important Safety Belt Information

The use of safety belts helps to restrain you and your passengers in case of a collision. In most states and in Canada the law requires their use.

Safety belts provide best restraint when:

- ❑ the seatback is upright
- ❑ the occupant is sitting upright (not slouched)
- ❑ the lap belt is snug and low on the hips
- ❑ the shoulder belt is snug against the chest
- ❑ the knees are straight forward

To help you remember to fasten your safety belt, a warning light may come on and a chime may sound. See *Safety Belt Warning Light and Chime* in the *Warning Lights and Gauges* chapter.

See the following sections in this chapter for directions on how to properly use these safety belts. Also see *Safety Restraints for Children* in this chapter for special instructions about using safety belts for children.

⚠WARNING
Make sure that you and your passengers wear safety belts. Always drive and ride

Downloaded from www.Manualslib.com manuals search engine

⚠WARNING

Never wear the shoulder belt under the arm. Never swing it around the neck over the inside shoulder. Never use a single belt for more than one person or across more than one seating position. Each seating position in your vehicle has a specific safety belt assembly which is made up of one buckle and one tongue that are designed to be used as a pair. Failure to follow these precautions could increase the risk and/or severity of injury in a collision.

⚠WARNING

Ford recommends that all safety belt assemblies and attaching hardware should be inspected by a qualified technician after any collision. Safety belt assemblies not in use during a collision should also be inspected and replaced if either damage or improper operation is noted.

⚠WARNING

To reduce the risk of serious injury in a collision, children should always ride with the seatback upright.

⚠WARNING

Never let a passenger hold a child on his or her lap while the vehicle is moving. The passenger cannot protect the child from injury in a collision.

Downloaded from www.Manualslib.com manuals search engine

Combination Lap and Shoulder Belts

While your vehicle is in motion, the combination lap and shoulder belt adjusts to your movement. However, if you brake hard, corner hard or if your vehicle receives an impact of 5 mph (8 km/h) or more, the lap and shoulder belt locks and helps reduce your forward movement.

After you get into your vehicle, close the door and lock it. Then adjust the seat to the position that suits you best.

To fasten the belt, pull the lap/shoulder belt from the retractor so that the shoulder portion of the belt crosses your shoulder and chest. Be sure the belt is not twisted. If it is, remove the twist. Insert the belt tongue into the proper buckle until you hear a snap and feel it latch. Make sure the tongue is securely fastened in the buckle.

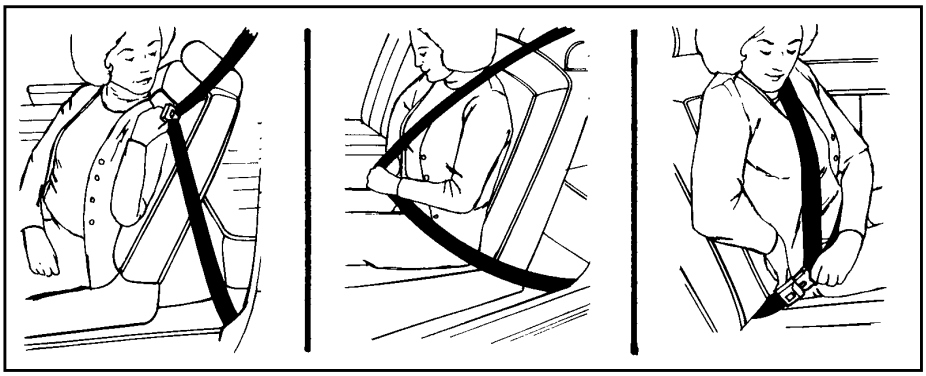

Fastening the front seat combination lap and shoulder belt

Downloaded from www.Manualslib.com manuals search engine

Fastening the rear seat combination lap and shoulder belt

NOTE: Be sure to read and understand *Important Safety Belt Information* at the beginning of this chapter.

Safety Belts for the Front Passenger Outboard Seating Positions

Your vehicle is equipped with a dual locking mode retractor on the shoulder belt portion of the combination lap/shoulder safety belt for front seat passengers and a locking "cinch tongue" for rear outboard passengers.

Dual locking mode retractors operate in two ways:

Vehicle sensitive (emergency) locking mode

In this operating mode, the shoulder belt retractor will allow the occupant freedom of movement, locking tight only on hard braking, hard cornering or impacts of approximately 5 mph (8 km/h) or more. The retractor can also be made to lock by pulling/jerking on the belt.

Downloaded from www.Manualslib.com manuals search engine

Automatic locking mode

safety belt is buckled, and does not allow the occupant freedom of movement. This mode provides the following:

- ❑ A tight lap/shoulder belt fit on the occupant.
- ❑ Child seat or infant carrier installation restraint.

⚠WARNING
Never install a rear-facing child seat or infant carrier in the right front passenger seat.

This mode **must be used** when installing a child safety seat on the front passenger seat and rear outboard seats where dual locking retractors are provided.

To switch the retractor from the emergency locking mode to the automatic locking mode, perform the following steps:

1. Buckle the lap/shoulder combination belt.
2. Grasp the shoulder portion of the belt and pull downward until all of the belt is extracted, and when allowed to retract, a clicking sound will be heard. At this time, the belt retractor is in the automatic locking mode (child restraint mode).
3. A clicking sound will contnue to be heard as the belt is allowed to retract.

NOTE: When the combination lap/shoulder belt is unbuckled and allowed to retract completely, the retractor will switch back to the vehicle sensitive

Downloaded from www.Manualslib.com manuals search engine

Safety Belts with Locking Cinch Tongue for Rear Outboard Seating Positions

Your vehicle is equipped with safety seat belts containing a cinch tongue at the rear outboard seating positions.

The locking cinch tongue will slide up and down the belt webbing when the belt is in the stowed position or while putting seat belts on. When the locking cinch tongue of the lap/shoulder combination seat belt is latched into the buckle, the cinch tongue will allow the lap portion to become shorter, but locks the webbing in place to restrict it from becoming longer.

Before you can reach and latch a combination lap and shoulder belt having a cinch tongue into the buckle, you may have to lengthen the lap belt portion of it. To lengthen the lap belt, pull some webbing out of the shoulder belt retractor. While holding the webbing below the tongue, grasp the tip (metal portion) of the tongue so that it is parallel to the webbing and slide the tongue upward. Provide enough lap belt length so that the tongue can reach the buckle.

NOTE: If you grasp the tongue by the tongue cover to lengthen the belt, the tongue cover will grab the webbing, making it difficult to slide.

Downloaded from www.Manualslib.com manuals search engine

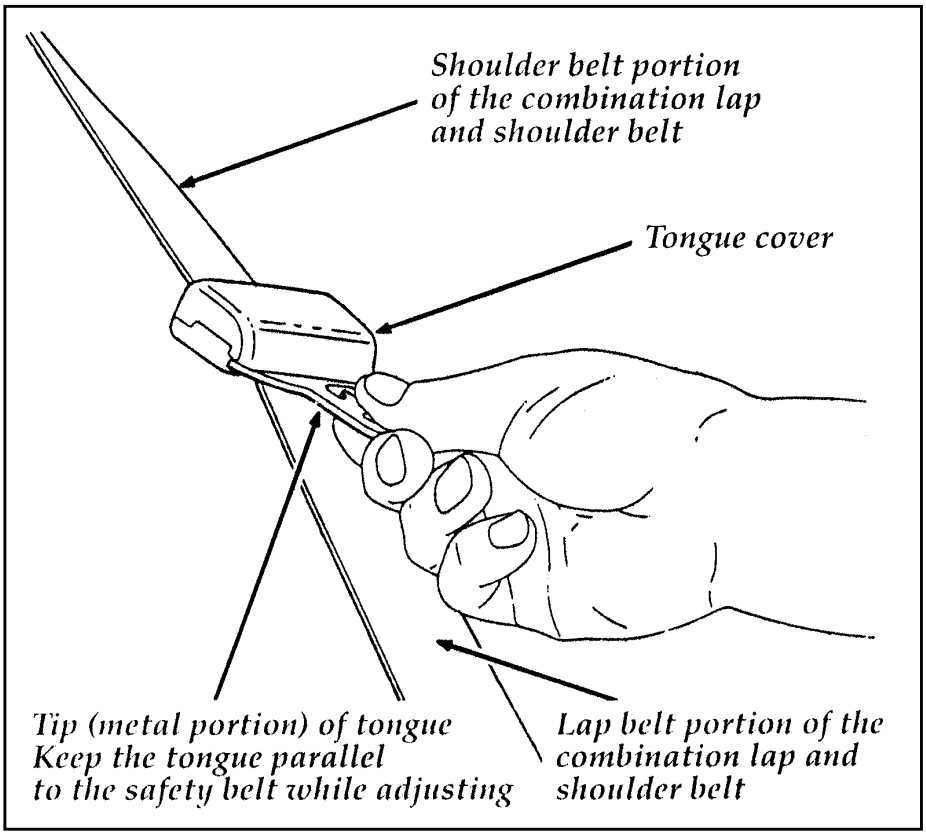

Adjusting the cinch tongue rear combination lap and shoulder belt

To fasten a cinch tongue, pull the combination lap and shoulder belt from the retractor so that the shoulder belt portion of the safety belt crosses your shoulder and chest. Be sure the belt is not twisted. If the belt is twisted remove the twist. Insert the belt tongue into the proper buckle for your seating position until you hear a snap and feel it latch. Make sure the tongue is securely fastened to the buckle by pulling on the tongue.

⚠WARNING

The lap belts should fit snugly and as low as possible around the hips, not around

Downloaded from www.Manualslib.com manuals search engine

⚠WARNING

All front and rear seat outboard occupants (including pregnant women) should wear lap and shoulder belts, for optimum protection in a collision.

⚠WARNING

Failure to follow these precautions could increase the risk and/or severity of injury in a collision. 1) Use the shoulder belt on the outside shoulder only. Never wear the shoulder belt under the arm. 2) Never swing it around your neck over the inside shoulder. 3) Never use a single belt for more than one person.

Due to folding rear seats, sometimes the buckles and tongues toward the center of the vehicle may be hidden by the rear edge of the seat cushion. Pull them out so they will be accessible.

While you are fastened in the seat belt, the combination lap/shoulder belt with a cinch tongue adjusts to your movement. However, if you brake hard, turn hard, or if your vehicle receives an impact of 5 mph (8 km/h) or more, the safety belt will become locked and help reduce your forward movement.

Downloaded from www.Manualslib.com manuals search engine

To unfasten all the belts:

1. Push the release button on the end of the buckle. This allows the tongue to unlatch from the buckle.

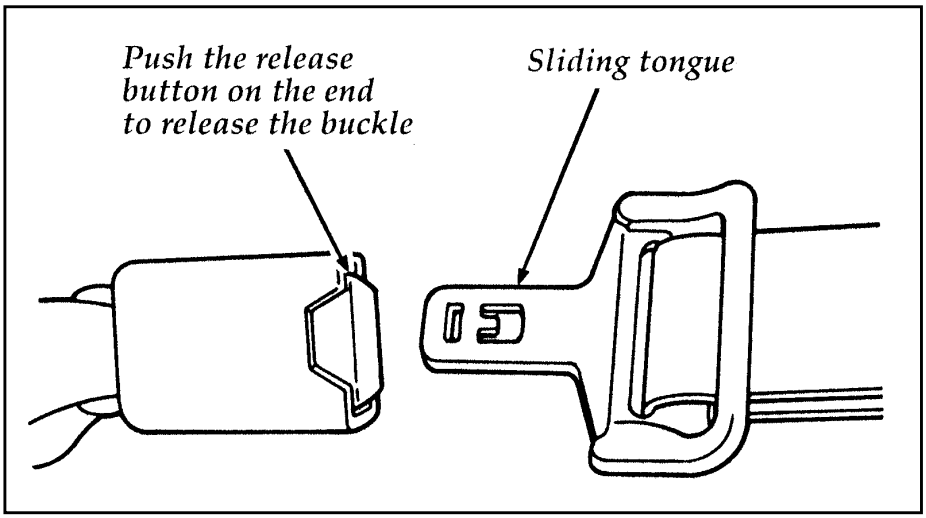

Unfastening the front outboard lap/shoulder belts

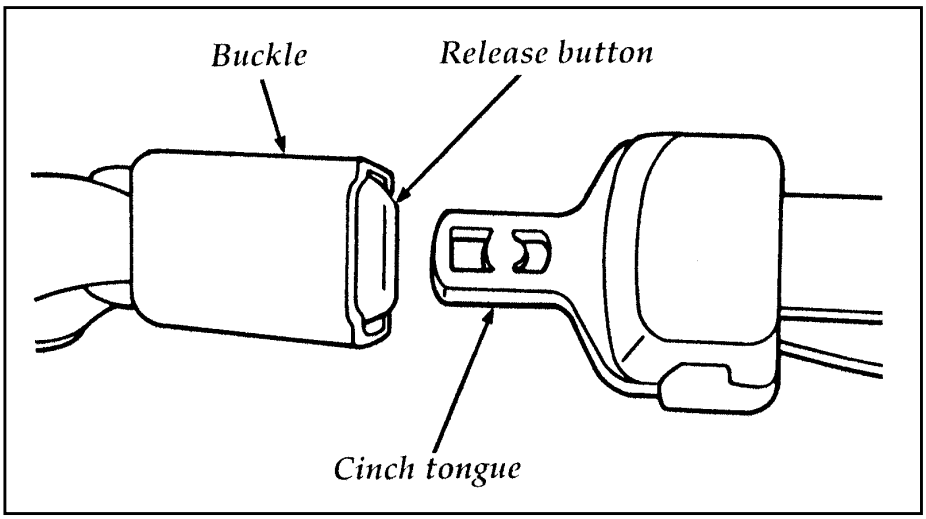

Unfastening the rear outboard lap/shoulder belts

2. While the belt retracts, guide the tongue to its stowed position. If you do not guide the tongue, it may strike you or part of the vehicle.

Downloaded from www.Manualslib.com manuals search engine

Lap Belts — Rear Center Seating Positions

The lap belt in the center of the rear seat does not adjust automatically. You must adjust it to fit snugly and as low as possible around your hips. Do not wear it around your waist.

Pull the belt across your hips and **insert the tongue into the correct buckle** on your seat until you hear a snap and feel it lock. Make sure the buckle is securely fastened.

If you need to lengthen the belt, unfasten it and tip the belt tongue at a right angle to the belt. Pull the belt tongue over your lap until it reaches the buckle.

If you need to shorten the belt, pull on the loose end of the webbing until the belt fits snugly.

To unfasten the belt, push the release button on the buckle. This allows the tongue to unlatch from the buckle.

Because the center lap belt does not have a retractor, it should be shortened and fastened when not in use.

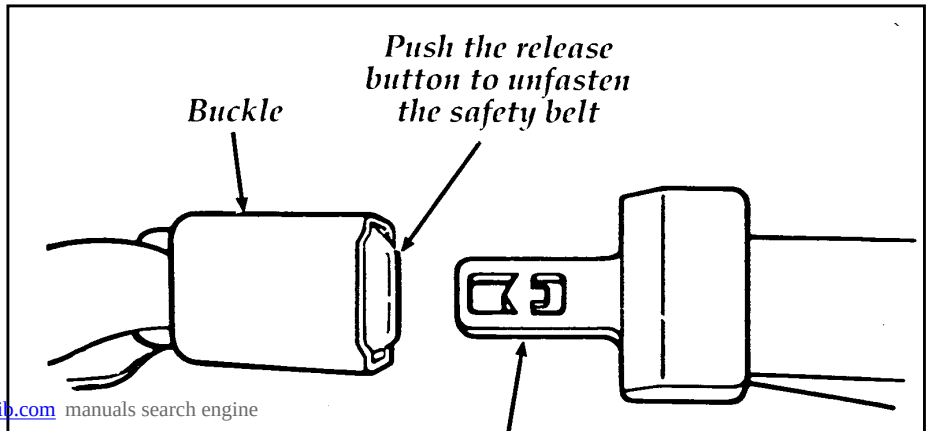

Downloaded from www.Manualslib.com manuals search engine

Safety Belt Extension Assembly

For some people, the safety belt may be too short even when it is fully extended. You can add about eight inches (20 cm) to the belt length with a safety belt extension assembly (part number 611C22). Safety belt extensions are available at no cost from your dealer.

⚠WARNING
Failure to follow these instructions will affect the performance of the safety belts and increase the risk of personal injury.

Use only extensions manufactured by the same supplier as the safety belt. Manufacturer identification is located at the end of the webbing on the label. Also, use the safety belt extension only if the safety belt is too short for you when fully extended. Do not use extension to change the fit of the shoulder belt across the torso.

Safety Belt Maintenance

Check the safety belt systems periodically to make sure that they work properly and are not damaged.

All safety belt assemblies, including retractors, buckles, front seat belt buckle support assemblies (slide bar) (if equipped), child safety seat tether bracket assemblies (if equipped), and attaching hardware, should be inspected after any collision. Ford recommends that all safety belt assemblies used in vehicles involved in a collision be replaced. However, if the collision

Downloaded from www.Manualslib.com manuals search engine

during a collision should also be inspected and replaced if either damage or improper operation is noted.

Cleaning the Safety Belts

Clean the safety belts with any mild soap solution that is recommended for cleaning upholstery or carpets. Do not bleach or dye the belt webbing because this may weaken it.

Air Bag Supplemental Restraint System (SRS)

The driver and right front passenger air bags are Supplemental Restraint Systems (SRS), provided at these seating positions in addition to the lap/shoulder belt, and are designed to supplement the protection provided to properly belted occupants in moderate to severe frontal collisions. The supplemental air bag system does not provide restraint to the lower body.

The Importance of Wearing Safety Belts

⚠WARNING

Safety belts must be worn by all vehicle occupants to be properly restrained and help reduce the risk of injury in a collision.

⚠WARNING

All occupants of the vehicle, including the driver, should always wear their safety belts, even when an air bag Supplemental Restraint System is provided.

Downloaded from www.Manualslib.com manuals search engine

There are four very important reasons to use safety belts even with an air bag system. Use your safety belts to:

- ❑ help keep you in the proper position (away from the air bag) when it inflates
- ❑ reduce the risk of harm in rollover, side or rear impact collisions, because an air bag is not designed to inflate in such situations
- ❑ reduce the risk of harm in frontal collisions that are not severe enough to activate the supplemental air bag
- ❑ reduce the risk of being thrown from your vehicle

The Importance of Being Properly Seated

In a collision, the air bag must inflate extremely fast to help provide additional protection for you. In order to do this, the air bag must inflate with considerable force. If you are not seated in a normal riding position with your back against the seatback, the air bag may not protect you properly and could possibly hurt you as it inflates.

⚠WARNING
If a passenger is not properly seated and restrained, an inflating air bag could cause serious injury.

⚠WARNING
Rear-facing infant seats should never be placed in the front seat.

Downloaded from www.Manualslib.com manuals search engine

In rear-facing infant seats, the infant's head is closer to the air bag. The force of the rapidly inflating air bag could push the top of the rear-facing seat against the vehicle seatback, center console (if so equipped), or center armrests (if so equipped). REAR-FACING INFANT SEATS MUST ALWAYS BE SECURED IN THE REAR SEAT, and other child safety seats and infant seats should be secured in the rear seat whenever possible.

Your vehicle is equipped with a right front passenger air bag. Air bags deploy with great force, faster than the blink of an eye. Front passengers, especially children and small adults, must never sit on the front edge of the seat, stand near the glove compartment of the instrument panel, or lean over near the air bag cover when the vehicle is moving. All occupants should sit with their backs against the seatback, move the seat to the most rearward position if possible and use the safety belts. Children weighing less than 40 lbs. (18 kg) always should use child or infant seats.

⚠WARNING

When using forward-facing child seats move the passenger seat as far back from the instrument panel as possible. NEVER SECURE REAR-FACING INFANT SEATS IN THE FRONT SEAT.

THE FORCE OF THE RAPIDLY INFLATING PASSENGER AIR BAG COULD PUSH THE TOP OF THE REAR-FACING SEAT AGAINST THE VEHICLE SEATBACK OR CENTER

Downloaded from www.Manualslib.com, manuals search engine

⚠WARNING

Do not place objects or mount equipment on or near the air bag cover on the steering wheel or in front seat areas that may come in contact with a deploying air bag. Failure to follow this instruction may increase the risk of personal injury in the event of a collision.

For additional important safety information on the proper use of seat belts, child seats, and infant seats, please read the other sections of this part of the Owner Guide, especially sections entitled *Safety Belts for Children* and *Safety Seats for Children*.

For further information about the proper mounting of equipment in the front seat of this vehicle, please refer to Ford's brochure entitled *Some Important Information About Air Bag Supplemental Restraint System* which can be obtained by calling Helm Inc. at 1-800-782-4356. Ask for brochure FPS-8602.

How the Air Bag Supplemental Restraint System Operates

The driver air bag is in the center of the steering wheel. The right front passenger seat air bag is in the upper right hand section of the instrument panel ledge above the glove compartment. Both air bags are designed to stay out of sight until they are activated.

Downloaded from www.Manualslib.com manuals search engine

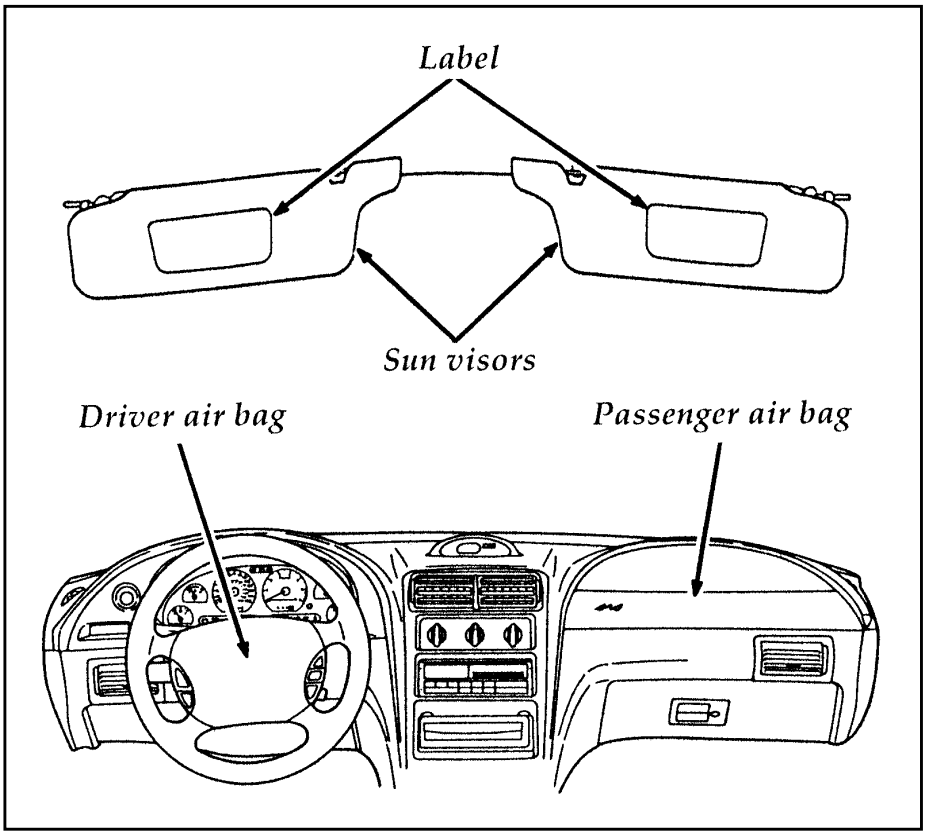

The location of the air bag and warning labels

If a collision occurs, the sensors sense the severity of the impact and activates the air bags if necessary. The air bag system is designed to deploy in frontal and front-angled collisions more severe than hitting a parked vehicle (of similar size and weight) head-on at about 28 mph (45 km/h). Because the system senses the crash severity rather than vehicle speed, some frontal collisions at speeds above 28 mph (45 km/h) will not inflate the air bag.

The whole inflation and deflation process takes place in a matter of seconds.

Downloaded from www.Manualslib.com manuals search engine

⚠WARNING

Air bag system components get hot after inflation. Do not touch them after inflation.

Inflated driver side air bag

Downloaded from www.Manualslib.com manuals search engine

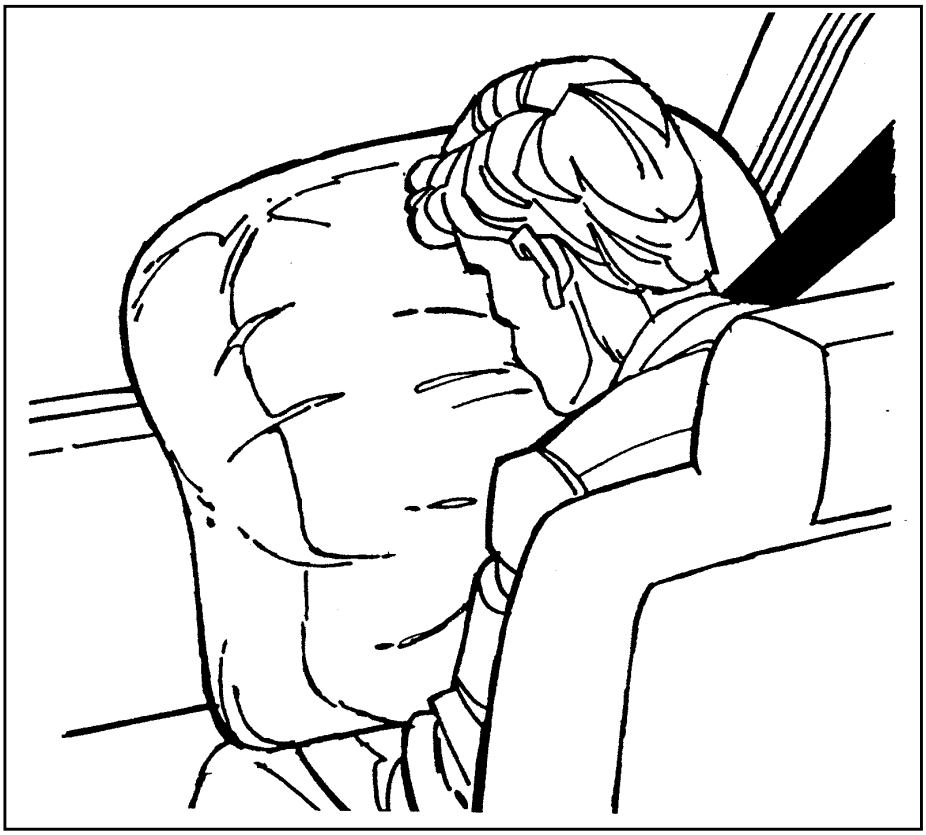

Inflated right front passenger side air bag

⚠WARNING

If the air bag is inflated, THE AIR BAG WILL NOT FUNCTION AGAIN AND MUST BE REPLACED IMMEDIATELY. If the air bag is not replaced, the unrepaired area will increase the risk of injury in a collision.

The air bag system uses a readiness light and a tone to indicate the condition of the system. The readiness light is in the instrument cluster. When you turn the ignition to the ON position, this light will illuminate for approximately six (6) seconds and then turn off. This indicates that the system is operating normally. **NOTE:**

Downloaded from www.Manualslib.com manuals search engine

A problem with the system is indicated by one or more of the following:

- ❑ the readiness light will either flash or stay lit, or
- ❑ it will not light immediately after the ignition is turned on, or
- ❑ a group of five beeps will be heard.

If any of these things happen, have the air bag system serviced at your Ford or Lincoln-Mercury dealer immediately. Unless serviced, the air bag supplemental restraint system may not function properly in the event of a collision.

⚠ **WARNING**
Do not attempt to service, repair, or modify the Air Bag Supplemental Restraint System or its fuses. See your Ford or Lincoln-Mercury dealer.

Disposal of air bags or air bag equipped vehicles

For disposal of air bags or air bag equipped vehicles, see your local Ford or Lincoln-Mercury dealer. Air bags **MUST** be disposed of by qualified personnel.

Safety Restraints for Children

In the U.S. and Canada, you are required by law to use safety restraints for children. If small children ride in your vehicle — this generally includes children who are four years old or younger and who weigh 40 pounds (18 kg) or less — you must put them in safety seats that

Downloaded from www.Manualslib.com manuals search engine

⚠WARNING

Never let a passenger hold a child on his or her lap while the vehicle is moving. The passenger cannot protect the child from injury in a collision.

⚠WARNING

Passengers should not be allowed to ride in the cargo area. Persons not riding in a seat with a fastened seat belt are much more likely to suffer serious injury in a collision. Cargo should always be secured to prevent it from shifting and causing damage to the vehicle or harm to passengers.

When possible, put children in the rear seat of your vehicle. Accident statistics suggest that children are safer when properly restrained in the rear seating positions than in the front seating positions.

⚠WARNING

Carefully follow all of the manufacturer's instructions included with the safety seat you put in your vehicle. If you do not install and use the safety seat properly, the child may be injured in a sudden stop or collision.

⚠WARNING

Safety belts and seats can become hot in a vehicle that has been closed up in sunny

Downloaded from www.Manualslib.com manuals search engine

⚠WARNING

Never leave a child unattended in your vehicle.

⚠WARNING

When using forward-facing child seats move the passenger seat as far back from the instrument panel as possible. NEVER SECURE REAR-FACING INFANT SEATS IN THE FRONT SEAT.

Safety Seats for Children

Use a safety seat that is recommended for the size and weight of the child. Always follow the safety seat manufacturer's instructions when installing and using the safety seat.

Ford recommends the use of a child safety seat having a top tether strap. Install the child safety seat in a seating position which is capable of providing a tether anchorage. For more information on top tether straps see your Ford or Lincoln-Mercury dealer.

When installing a child safety seat, be sure to use the correct safety belt buckle for that seating position, and make sure the tongue is securely fastened in the buckle.

Children weighing less than 40 lbs. (18 kg) should use child or infant seats. Forward facing child seats must have the passenger seat moved as far back from the instrument panel as possible.

Downloaded from www.Manualslib.com manuals search engine

⚠WARNING

REAR-FACING INFANT SEATS SHOULD NEVER BE USED IN THE FRONT SEAT. REAR-FACING INFANT SEATS MUST ALWAYS BE PLACED IN THE REAR SEAT. Failure to follow these instructions could result in serious injury.

All child restraint systems are designed to be secured in vehicle seats by lap belts or by the lap portion of a lap-shoulder belt.

⚠WARNING

If you do not properly secure the safety seat, the child occupying the seat may be injured during a collision or sudden stop. An unsecured safety seat could also injure other passengers.

⚠WARNING

Carefully follow all of the manufacturer's instructions included with the safety seat you put in your vehicle. If you do not install and use the safety seat properly, the child may be injured in a sudden stop or collision.

⚠WARNING

Always keep the buckle release button pointing upward and away from the child seat, with the tongue between the child seat and the release button as shown in the following illustration.

Downloaded from www.Manualslib.com manuals search engine

Installing Safety Seats in the Front Outboard Passenger Seating Position

For seating positions equipped with a dual locking mode retractor, use the following procedure.

If you choose to install a child safety seat or infant carrier in the front seating positions, move vehicle seat as far back as possible.

1. Position the child seat in the center of the passenger seat.
2. Pull down on shoulder belt, then grasp shoulder belt and lap belt together. Figure 1.

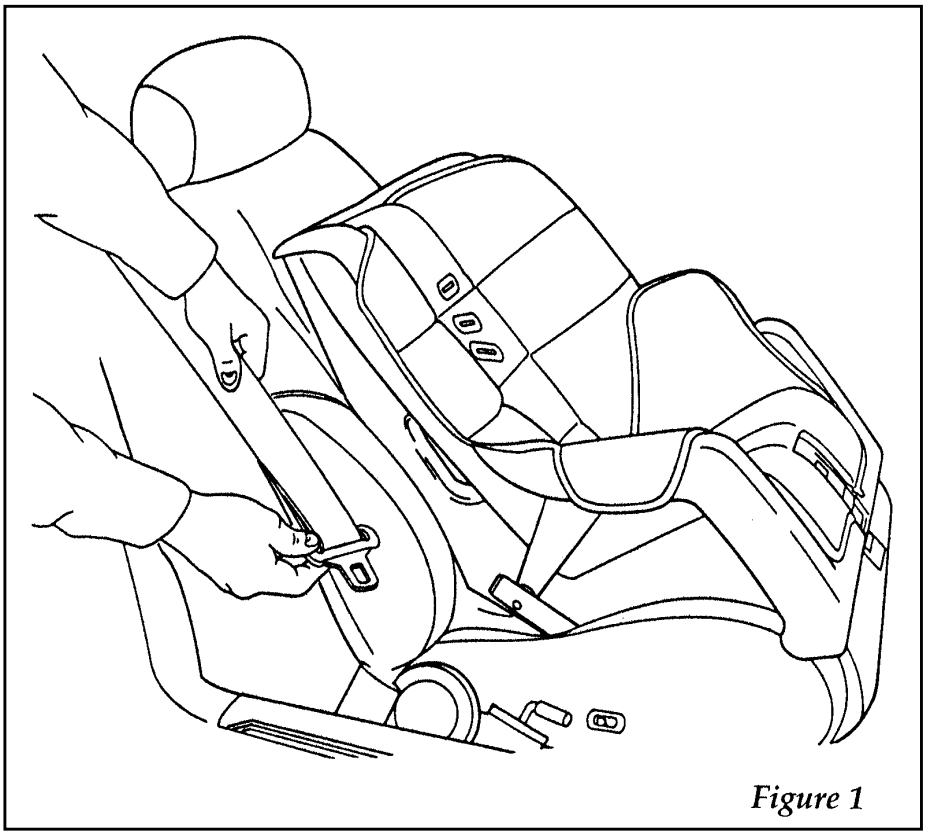

Figure 1

Downloaded from www.Manualslib.com manuals search engine

3. While holding the shoulder and lap belt portions together, route the tongue through the child seat according to the child seat manufacturer's instructions. See Figure 2. Be sure that the belt webbing is not twisted.

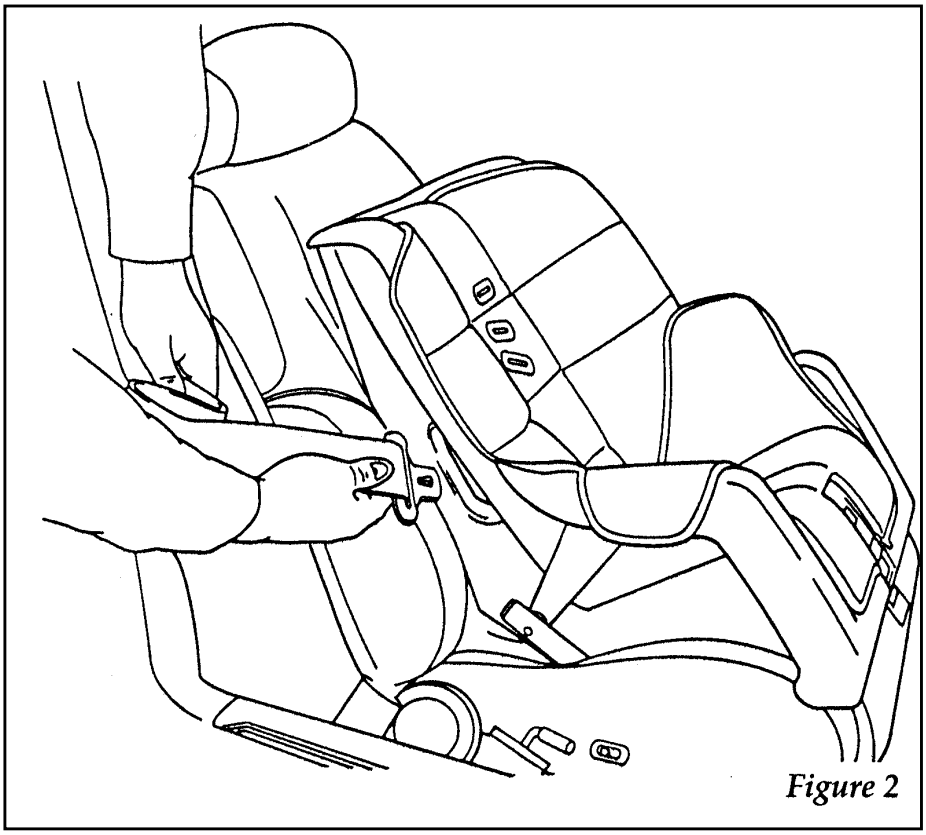

Figure 2

Routing the lap/shoulder belt

Downloaded from www.Manualslib.com manuals search engine

4. Insert the belt tongue into the buckle for that seating position until you hear and feel the latch engage. Figure 3. Make sure tongue is latched securely to buckle by pulling on tongue.

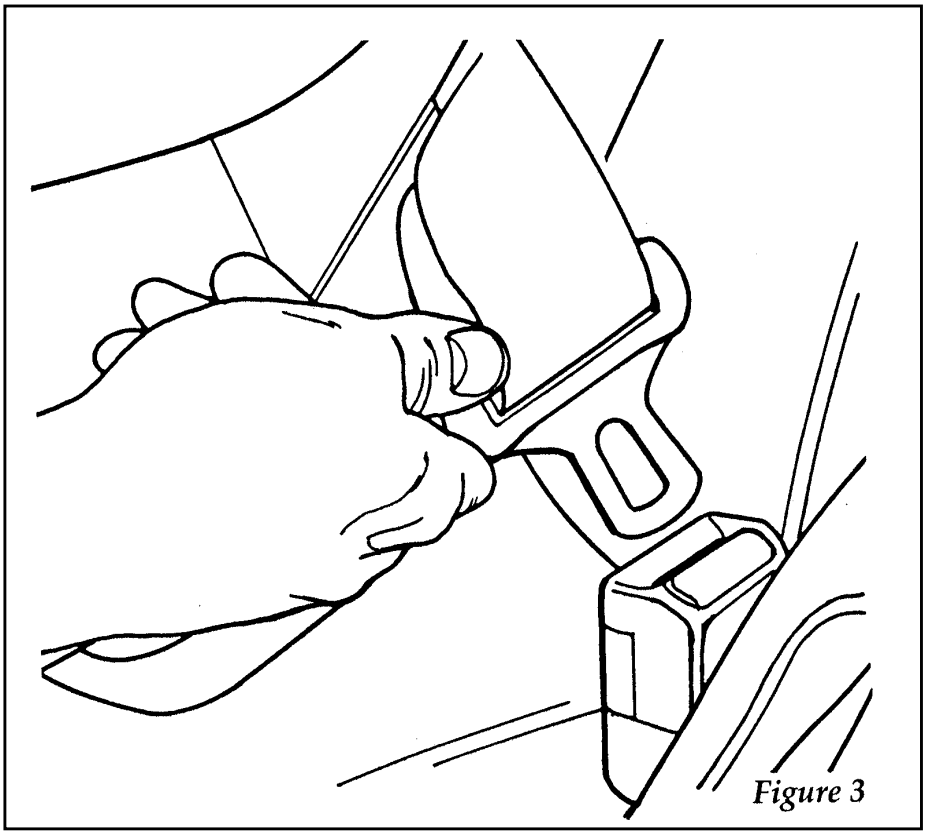

Buckling the belt

Downloaded from www.Manualslib.com manuals search engine

5. Grasp the shoulder portion of the belt and pull downward until all of the belt is extracted and a click is heard. At this time, the retractor is in the automatic locking mode (child seat restraint mode). Figure 4.

NOTE: The dual-locking mode retractor must be in the automatic locking mode to properly restrain a child.

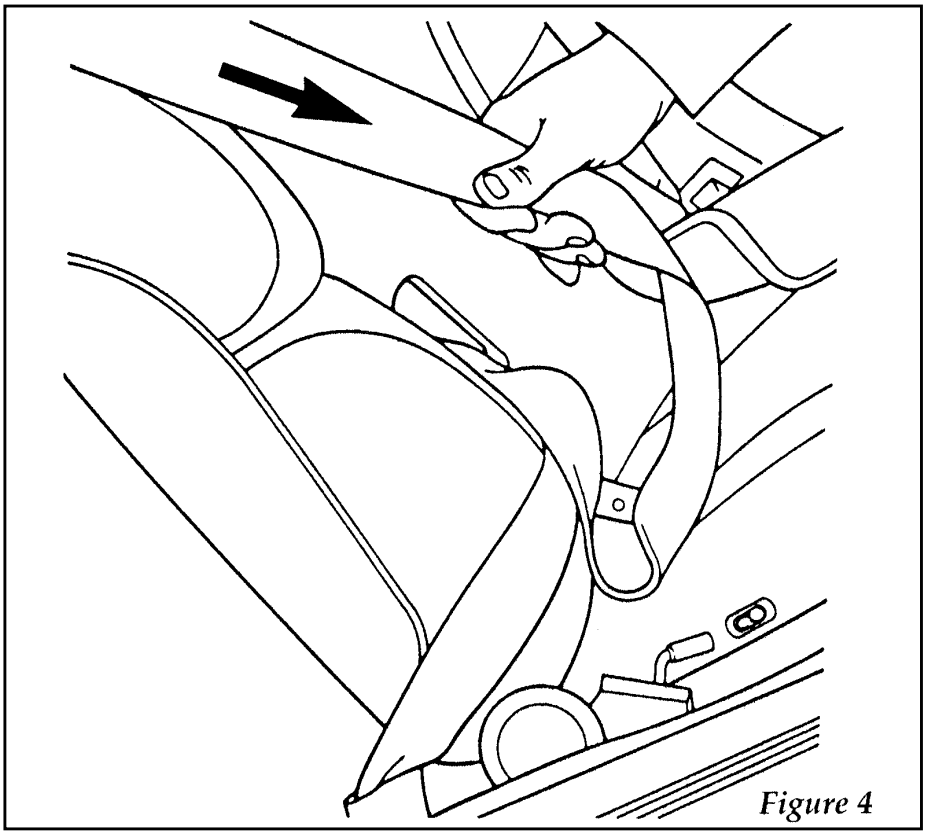

Setting the retractor to automatic locking mode

6. Allow the belt to retract. Pull up on the shoulder webbing. A clicking sound will be heard as the belt retracts. This indicates the retractor is in the automatic locking mode. Push down on the child seat while you pull up on the belt to remove any slack in the belt. Figures 5 and 6.

Downloaded from www.Manualslib.com manuals search engine

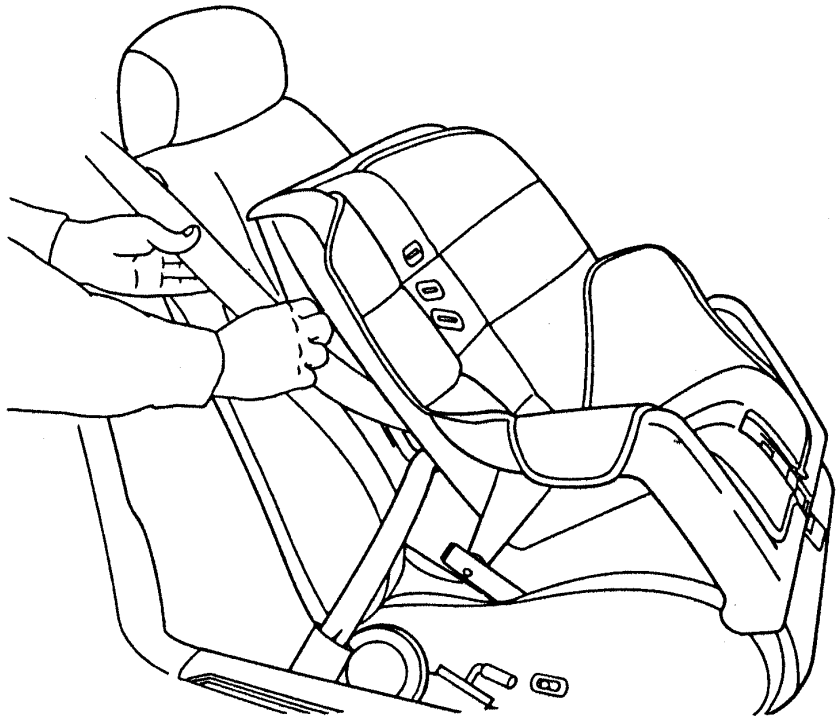

Figure 5

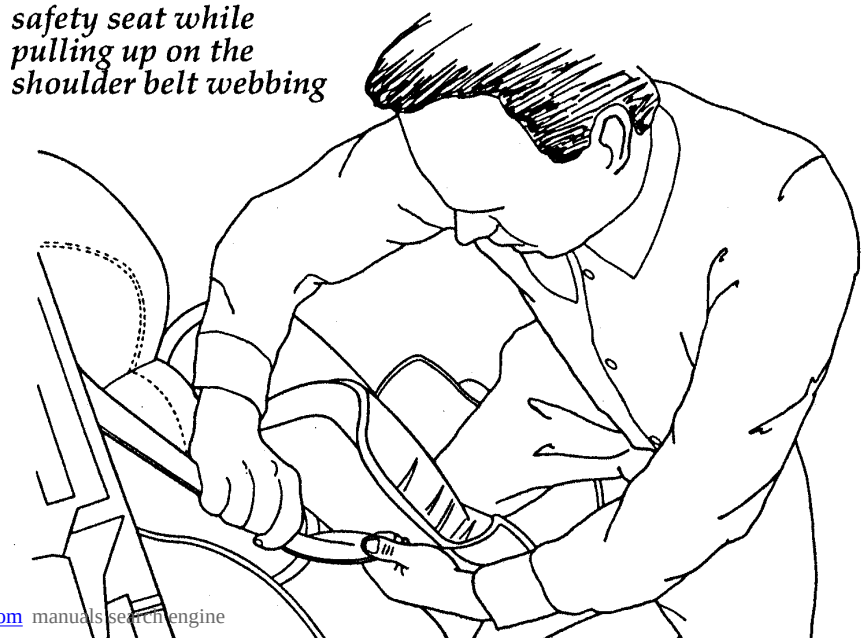

Downloaded from www.Manualslib.com manuals search engine

7. Before placing the child in the child seat, forcibly tilt the seat from side to side, and tug it forward to make sure that the seat is securely held in place, Figure 7.

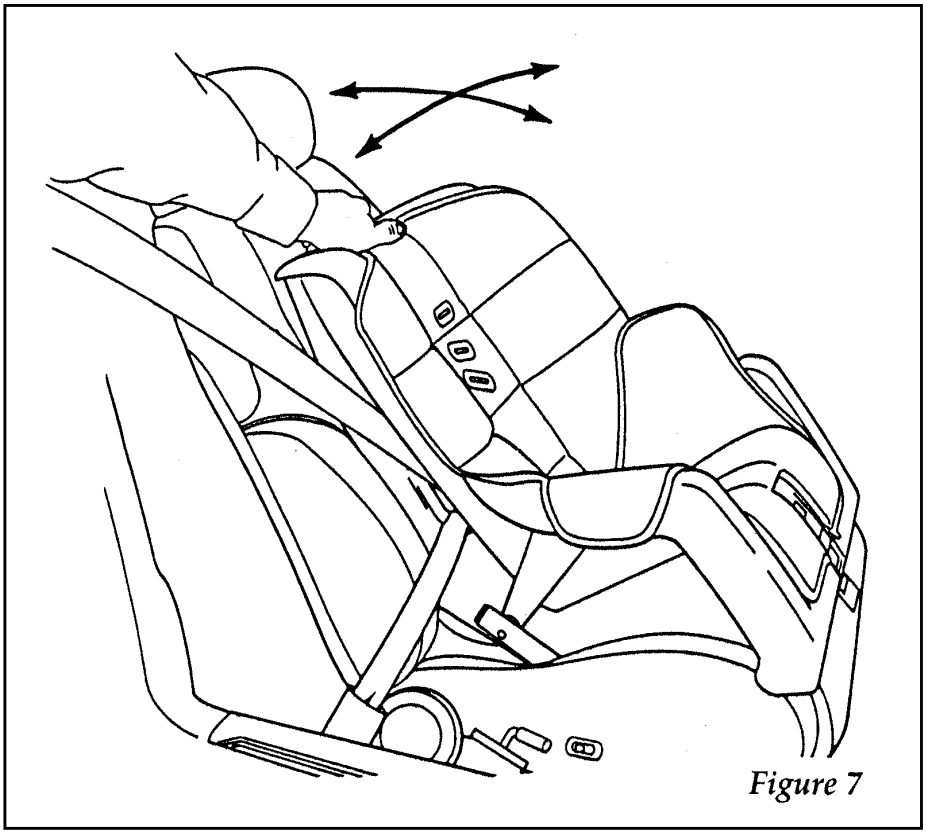

Checking that the seat is secure

8. Double check that the retractor is in the automatic locking mode. Try to pull more belt out of the retractor. If you cannot, the belt is in the automatic locking mode, Figure 8.

Downloaded from www.Manualslib.com manuals search engine

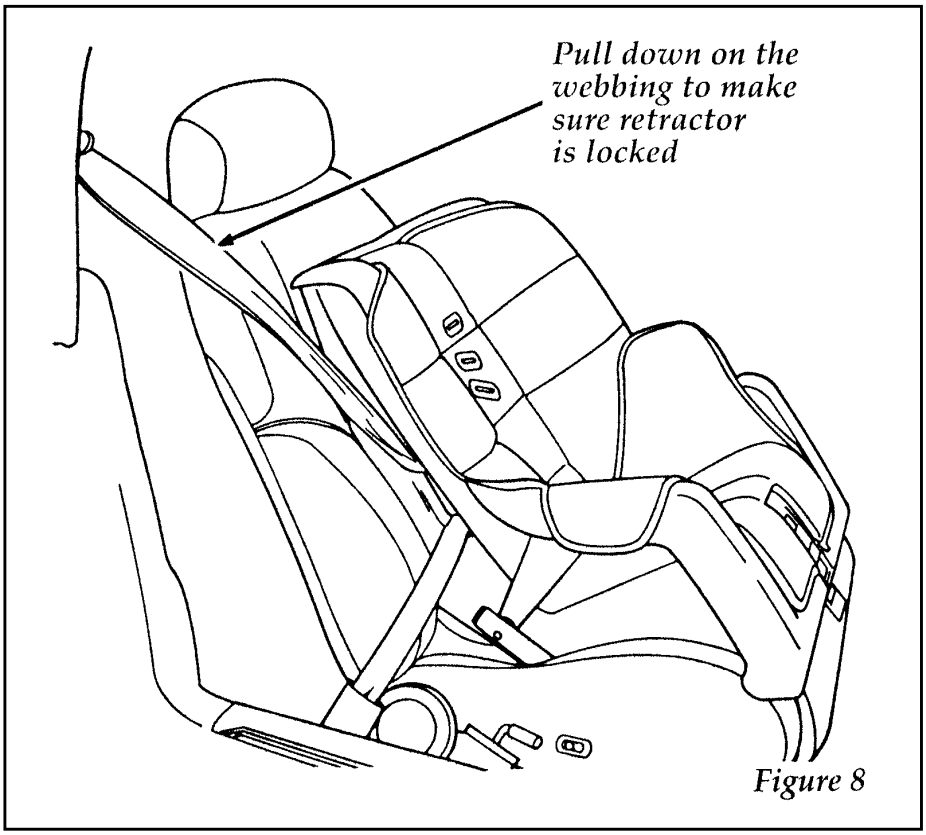

Figure 8

Checking the retractor

9. Check to make sure that the child seat is properly secured prior to each use. If the retractor is not locked, repeat steps 4 through 7.

Installing Child Safety Seats in the Rear Outboard Seating Positions

Your rear outboard seating positions are equipped with a cinch tongue on the safety belts. Use the following procedure for installing a child safety seat in these locations.

1. Grasp the belt webbing below the tongue and pull as much of the belt out of the retractor as possible. Hold the belt out. See Figure 1.

Downloaded from www.Manualslib.com manuals search engine

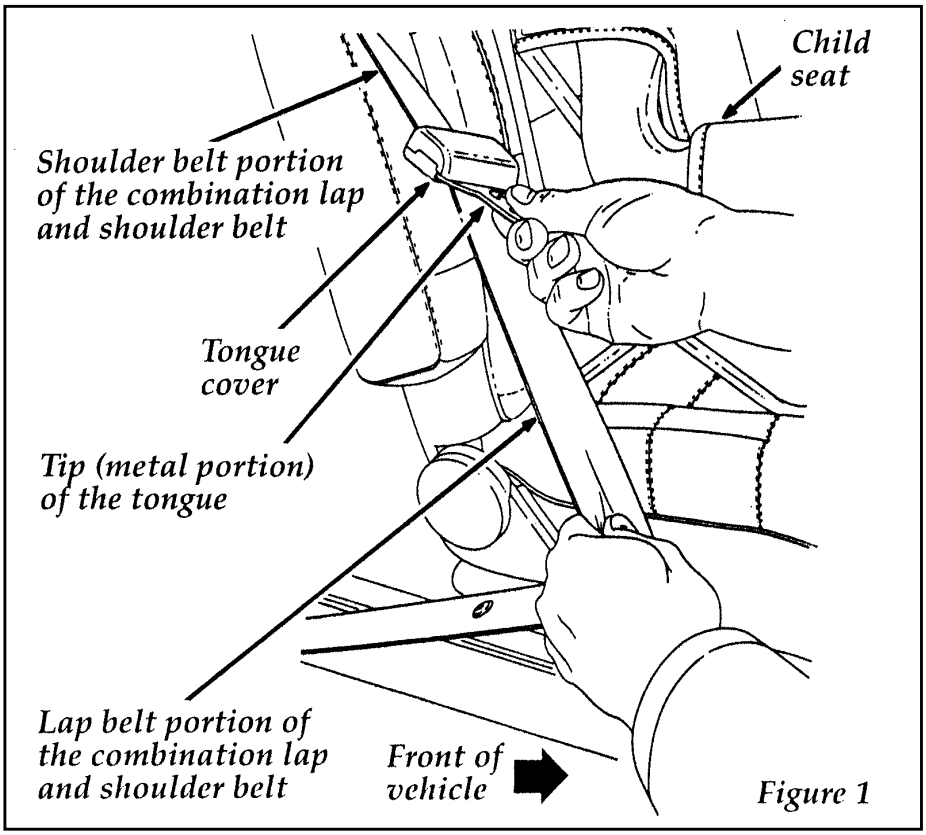

Figure 1

NOTE: The belt webbing below the tongue is the lap belt portion of the combination lap/shoulder belt, and the belt webbing above the tongue is the shoulder belt portion of the combination lap/shoulder belt.

2. With your other hand, grasp the tip (metal portion) of the tongue (not the cover) and slide the tongue up the webbing as far as it will go. See Figure 1. Release the tongue, but do not let go of the lap portion of the belt webbing.

3. While still holding the belt webbing below the tongue in one hand, use your other hand

Downloaded from www.Manualslib.com manuals search engine

4. While holding the shoulder and lap belt portions together, route the tongue and webbing through the child seat according to the child seat manufacturer's instructions. See Figure 2. Be sure that the belt webbing is not twisted.

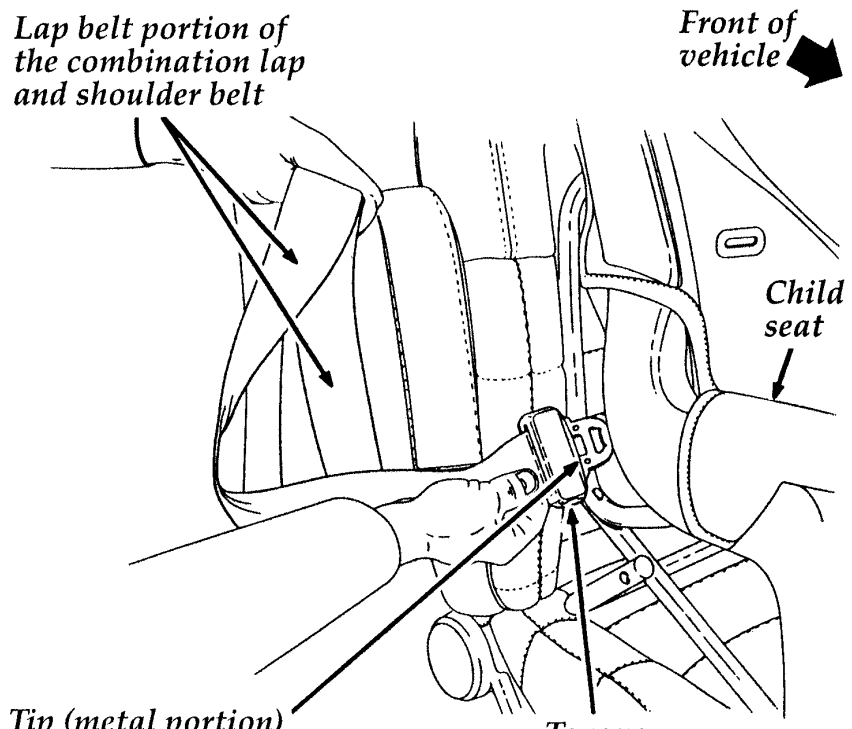

Figure 2

Downloaded from www.Manualslib.com manuals search engine

5. Insert the belt tongue into the proper buckle for that seating position until you hear a snap and feel it latch. Make sure the tongue is securely latched to the buckle by pulling on the tongue. See Figure 3.

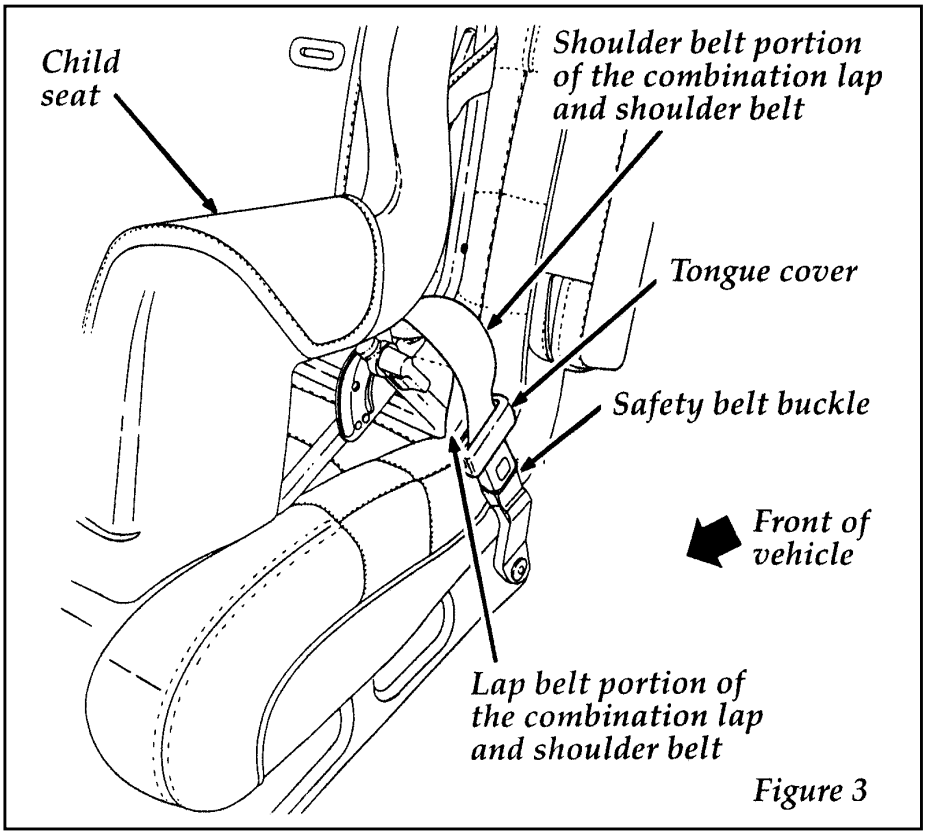

Figure 3

Downloaded from www.Manualslib.com manuals search engine

6. Push down on the child seat and pull up on the shoulder belt portion to tighten the lap belt portion of the combination lap and shoulder belt. See Figure 4.

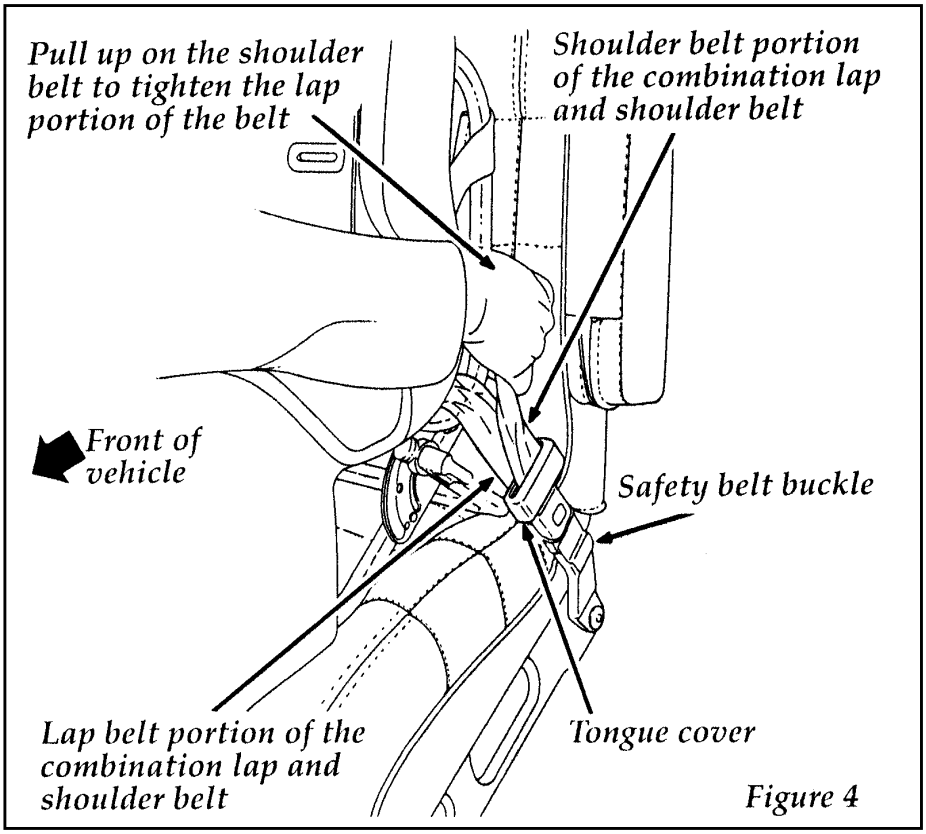

Figure 4

Downloaded from www.Manualslib.com manuals search engine

7. Grasp belt close to child seat and pull on the shoulder belt portion of the combination lap/shoulder belt, then allow the belt to retract and remove all slack to securely tighten the child safety seat in the vehicle. See Figure 5.

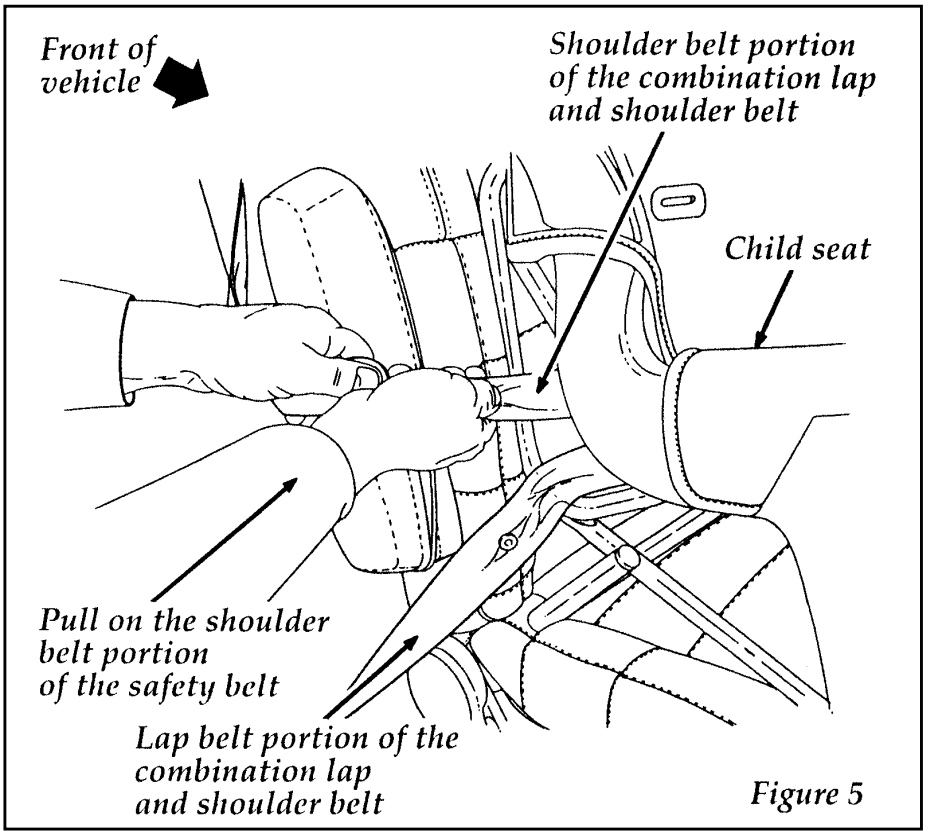

Figure 5

8. Before placing the child into the child seat, forcibly tilt the child seat from side-to-side and in forward directions to make sure that the seat is held securely in place. See Figures 6 and 7. If the child seat moves excessively, repeat steps 6 through 8, or properly install the child seat in a different seating position.

Downloaded from www.Manualslib.com manuals search engine

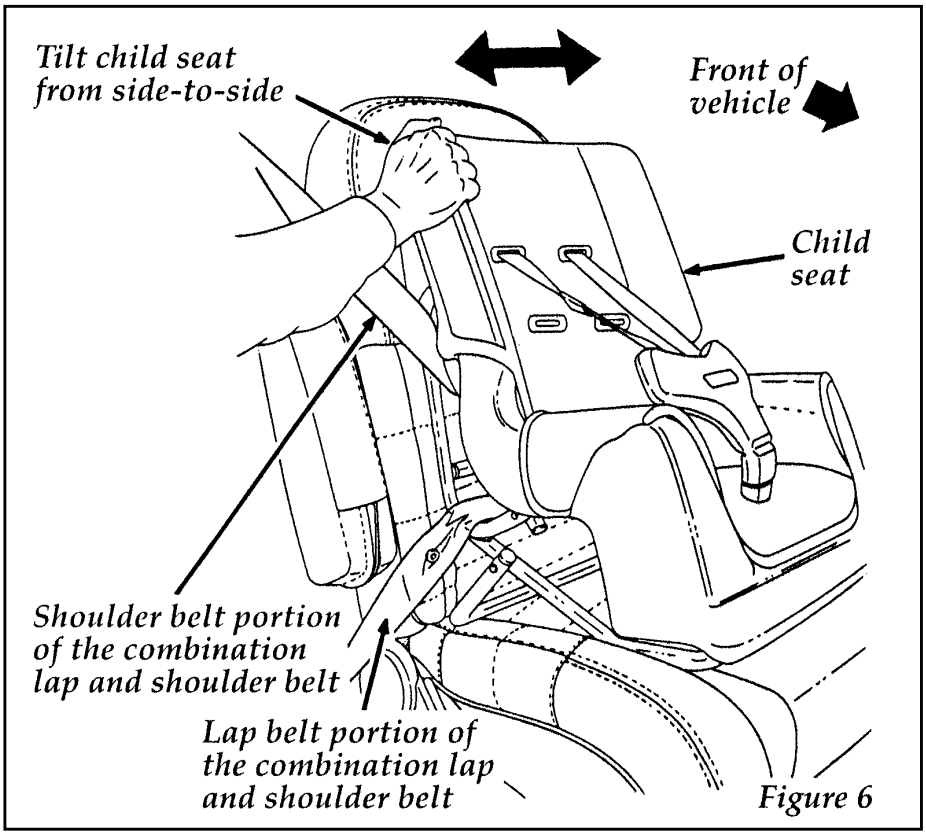

Figure 6

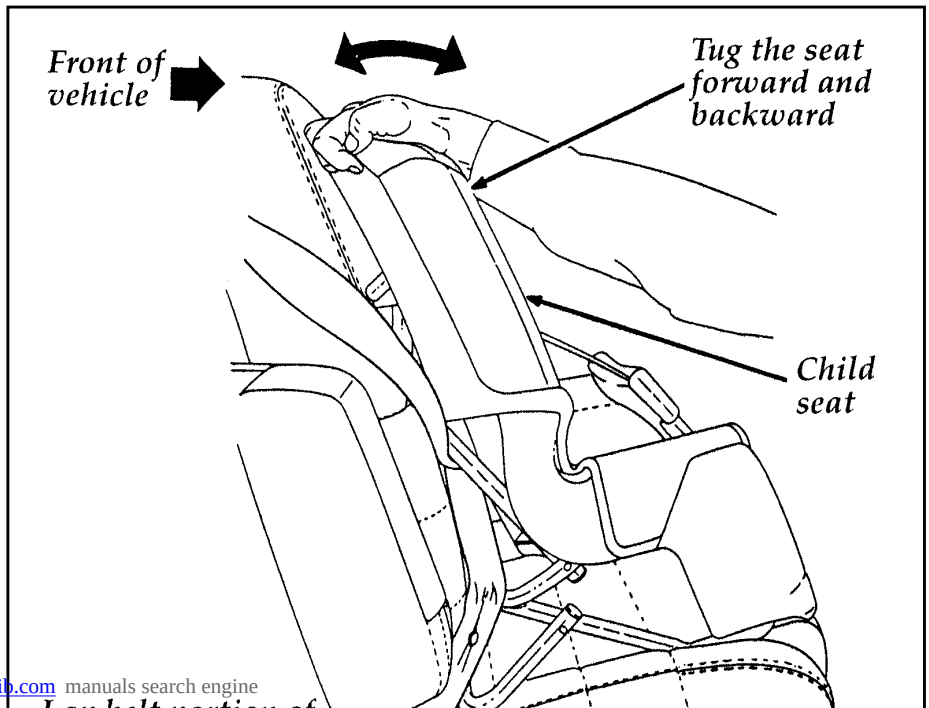

Downloaded from www.Manualslib.com manuals search engine

9. Check from time to time to be sure that there is no slack in the lap/shoulder belt. The shoulder belt must be snug to keep the lap belt tight during a collision.

Installing a Child Safety Seat at the Rear Center Seating Position with Adjustable Lap Belt

1. Lengthen the lap belt. To lengthen the belt, hold the tongue so that its bottom is perpendicular to the direction of webbing while sliding the tongue up the webbing.

2. Place the child safety seat in the center seating position.

3. Route the tongue and webbing through the child seat according to the child seat manufacturer's instructions.

4. Insert the belt tongue into the proper buckle for the center seating position until you hear a snap and feel it latch. Make sure the tongue is securely fastened to the buckle by pulling on tongue.

5. Push down on the child seat while pulling on the loose end of the lap belt webbing to tighten the belt.

6. Before placing the child into child seat, forcibly tilt the child seat from side-to-side and in forward direction to ensure that the seat is held securely in place. If the child seat moves excessively, repeat steps 5 through 6, or properly install the child seat in a different position.

Downloaded from www.Manualslib.com manuals search engine

Safety Belts for Children

Children who are too large for child safety seats should always wear safety belts. (See instructions with your child seat, or contact its manufacturer, to determine maximum size of child that will safely fit in the seat.)

⚠WARNING

If safety belts are not properly worn and adjusted as described, the risk of serious injury to the child in a collision will be much greater.

If the shoulder belt portion of one of the lap and shoulder belts can be positioned so that it does not cross or rest in front of the child's face or neck, the child should wear the lap and shoulder belt. Moving the child closer to the center of the vehicle may help provide a good shoulder belt fit.

⚠WARNING

If the shoulder belt cannot be properly positioned, the child should sit in the center rear seat and use the lap belt.

Downloaded from www.Manualslib.com manuals search engine

To improve the fit of lap and shoulder belts on children who have outgrown child safety seats, Ford recommends use of a belt-positioning booster seat that is labelled as conforming to all Federal motor vehicle safety standards. Belt-positioning booster seats raise the child and provide a shorter, firmer seating cushion that encourages safer seating posture and better fit of lap and shoulder belts on the child. A belt-positioning booster should be used if the shoulder belt rests in front of the child's face or neck, or if the lap belt does not fit snugly on both thighs, or if the thighs are too short to let the child sit all the way back on the seat cushion when the lower legs hang over the edge of the seat cushion. You may wish to discuss the specific needs of your child with your pediatrician.

⚠WARNING
Do not use a belt-positioning booster with a lap-only belt.

Lap belts and the lap belt portion of lap and shoulder belts should always be worn snugly and below the hips, touching the child's thighs.

⚠WARNING
To reduce the risk of serious injury in a collision, children should always ride with the seatback upright.

Downloaded from www.Manualslib.com manuals search engine

Starting Your Cougar

Ignition

Understanding the Positions of the Ignition

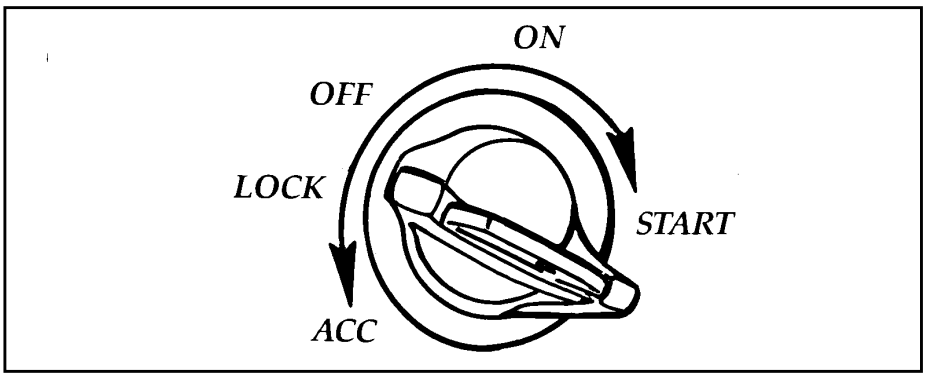

The positions of the key in the ignition

ACCESSORY allows some of your vehicle's electrical accessories such as the radio and the windshield wipers to operate while the engine is not running.

LOCK locks the steering wheel. It also locks the automatic transmission gearshift lever.

LOCK is the only position that allows you to remove the key. The LOCK feature helps to protect your vehicle from theft.

OFF allows you to shut off the engine and all accessories without locking the steering wheel or the automatic transmission gearshift lever.

ON allows you to test your vehicle's warning lights (except the brake system warning light) to

Downloaded from www.Manualslib.com manuals search engine

START cranks the engine. Release the key once the engine starts so that you do not damage the starter. The key should return to ON when you release it. The START position also allows you to test the brake warning light.

Removing the Key From the Ignition

1. Put the gearshift in P (Park).
2. Set the parking brake fully.
3. Turn the ignition key to LOCK.
4. Remove the key.

NOTE: The automatic transmission gearshift must be in P (Park) to move the key to the lock position.

If the key is stuck in the LOCK position, move the steering wheel left or right until the key turns freely.

If the driver's door is open while the key is still in the ignition, a warning chime sounds.

⚠WARNING

Always set the parking brake fully and make sure that the gearshift is securely latched in P (Park).

⚠WARNING

Do not leave children, unreliable adults, or pets alone in your vehicle. They could accidentally injure themselves or others through inadvertent operation of the vehicle. Further, on hot, sunny days,

Downloaded from www.Manualslib.com manuals search engine

Fuel-Injected Engines

When starting a fuel-injected engine, **the most important thing to remember is to avoid pressing down on the accelerator before or during starting**. Only use the accelerator when you have problems getting your vehicle started. See *Starting Your Engine* in this chapter for details about when to use the accelerator while you start your vehicle.

Starting Your Vehicle

Preparing to Start Your Vehicle

⚠WARNING
Do not start your vehicle in a closed garage or other enclosed area. Never sit in a stopped vehicle for more than a short period of time with the engine running. Exhaust fumes are toxic. See *Guarding Against Exhaust Fumes* in this chapter for more instructions.

Before you start your vehicle, do the following:

1. Make sure you and all your passengers buckle your safety belts. See *Safety Restraints* in the Index for more details.
2. Make sure the headlamps and other accessories are turned off when starting.
3. Make sure that the gearshift is in P (Park) and the parking brake is set before you turn the key.

Before you start your vehicle, you should test

Downloaded from www.Manualslib.com manuals search engine

Starting Your Engine

To start your engine:

1. Follow the steps under *Preparing to Start Your Vehicle* at the beginning of this section.
2. Turn the ignition key to the ON position.
3. DO NOT depress the accelerator pedal when starting your engine. DO NOT use the accelerator while the vehicle is parked.
4. Turn the key to the START position (cranking) until the engine starts. Allow the key to return to the ON position after the engine has started.

   If you have difficulty in turning the key, rotate the steering wheel slightly because it may be binding.

For a cold engine:

- ❑ At temperatures **10˚F (-12˚C) and below:** If the engine does not start in **fifteen (15) seconds** on the first try, turn the key to OFF, wait approximately ten (10) seconds so you do not flood the engine, then try again.
- ❑ At temperatures **above 10˚F (-12˚C):** If the engine does not start in **five (5) seconds** on the first try, turn the key to OFF, wait approximately ten (10) seconds so you do not flood the engine, then try again.

For a warm engine:

- ❑ Do not hold the key in the START position for more than **five (5) seconds** at a time. If the engine does not start within five (5)

Downloaded from www.Manualslib.com manuals search engine

Whenever you start your vehicle, release the key as soon as the engine starts. Excessive cranking could damage the starter or flood the engine.

After you start the engine, let it idle for a few seconds. Keep your foot on the brake pedal and put the gearshift lever in gear. Release the parking brake. Slowly release the brake pedal and drive away in the normal manner.

NOTE: Your vehicle has an interlock that prevents you from shifting out of P (Park) unless your foot is on the brake pedal.

If the engine does not start after two attempts:

1. Turn the ignition key to the OFF position.
2. Press the accelerator all the way to the floor and hold it.
3. Turn the ignition key to the START position.
4. Release the ignition key when the engine starts.
5. Release the accelerator gradually as the engine speeds up. Then drive away in the normal manner.

If the engine still does not start, the fuel pump shut-off switch may have been triggered. For directions on how to reset the switch see *Fuel Pump Shut-Off Switch* later in this chapter.

A computer system controls the engine's idle speed. When you start your vehicle, the engine's idle speed normally runs higher than when it's warmed up. These faster engine speeds will make your vehicle move slightly faster than its

Downloaded from www.Manualslib.com manuals search engine

If the engine idle speed does not slow down automatically, do not allow your vehicle to idle for more than 10 minutes. Have the vehicle checked.

⚠WARNING

Extended idling at high engine speeds can produce very high temperatures in the engine and exhaust system, creating the risk of fire or other damage.

⚠WARNING

Do not park, idle, or drive your vehicle in dry grass or other dry ground cover. The emission system heats up the engine compartment and exhaust system, which can start a fire.

If you consistently start your vehicle in subzero temperatures, use an engine block heater (if your vehicle has this option).

Engine Block Heater (If equipped)

Engine block heaters are strongly recommended if you live in a region where temperatures reach -10˚F (-23˚C) or below. An engine block heater warms the engine coolant, which improves starting, warms up the engine faster, and allows the heater-defrost system to respond quickly.

To turn the heater on, simply plug it into a grounded 110-volt outlet. Ford recommends that you use a 110-volt circuit that is protected by a ground fault circuit interrupter.

Downloaded from www.Manualslib.com manuals search engine

⚠WARNING

To prevent electrical shock, do not use your heater with ungrounded electrical systems or two-pronged (cheater) adapters.

For best results, plug the heater in at least three hours before you start your vehicle. Using the heater for longer than three hours will not damage the engine, so you can plug it in at night to start your vehicle the following morning.

NOTE: Be sure to disconnect the engine block heater before driving your vehicle.

Guarding Against Exhaust Fumes

Carbon monoxide, although colorless and odorless, is present in exhaust fumes. Take precautions to avoid its dangerous effects.

⚠WARNING

Do not start your vehicle in a closed garage or other enclosed area. Never sit in a stopped vehicle for more than a short period of time with the engine running. Exhaust fumes are toxic. See *Guarding Against Exhaust Fumes* in this chapter for more instructions.

⚠WARNING

If you smell exhaust fumes inside your vehicle, have your dealer inspect your vehicle immediately. Do not drive if you smell exhaust fumes.

Downloaded from www.Manualslib.com manuals search engine

Have the exhaust and body ventilation systems checked whenever:

- ❑ your vehicle is raised for service
- ❑ the sound of the exhaust system changes
- ❑ your vehicle has been damaged in a collision

Improve your ventilation by keeping all air inlet vents clear of snow, leaves, and other debris.

If the engine is idling while you are stopped in an open area for long periods of time, open the windows at least one inch (2.5 cm). Also, the heating or air conditioning system should be set to any function except MAX A/C or AUTO.

- ❑ If you use the heater, set the fan speed on MEDIUM or HIGH with the function control on any position except OFF and the temperature control at any desired position.
- ❑ If you use the air conditioner, set the fan speed on MEDIUM or HIGH with the function control on any position except OFF or MAX and the temperature control at any desired position.

Downloaded from www.Manualslib.com manuals search engine

If the Engine Cranks but Does Not Start or Does Not Start After a Collision

Fuel Pump Shut-off Switch

If the engine cranks but does not start or does not start after a collision, the fuel pump shut-off switch may have been triggered. The shut-off switch is a device intended to stop the fuel pump when your vehicle has been involved in a substantial jolt.

Once the shut-off switch is triggered, you must reset the switch by hand before you can start your vehicle. The switch is on the left side of the trunk.

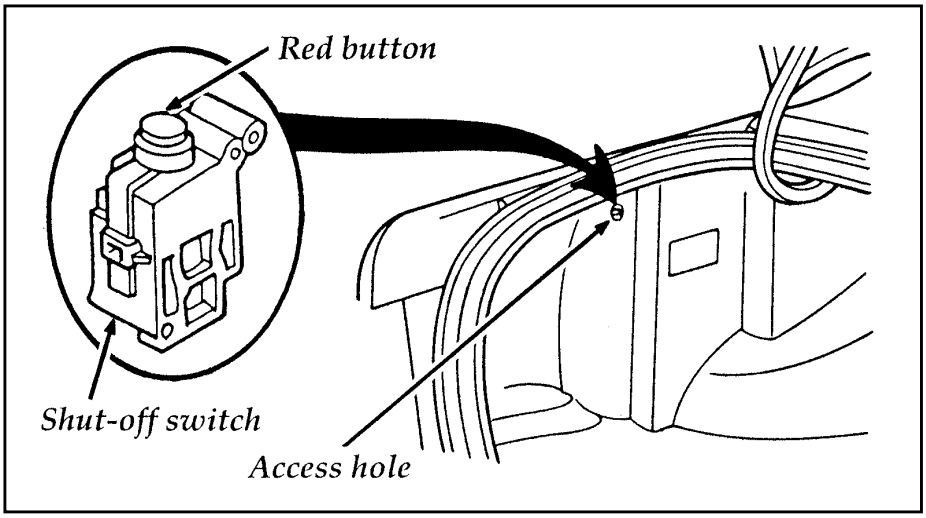

The fuel pump shut-off switch

⚠WARNING

If you see or smell fuel, do not reset the switch or try to start your vehicle. Have all the passengers get out of the vehicle and call the local fire department or a

Downloaded from www.Manualslib.com manuals search engine

If your engine cranks but does not start after a collision or substantial jolt:

1. Turn the ignition key to the OFF position.
2. Check under the vehicle for leaking fuel.
3. If you do not see or smell fuel, push the red reset button down. If the button is already set, you may have a different mechanical problem.
4. Turn the ignition key to the ON position for a few seconds, then turn it to the OFF position.
5. Check under the vehicle again for leaking fuel. **If you see or smell fuel, do not start your vehicle again.** If you do not see or smell fuel, you can try to start your vehicle again.
6. Check all vehicle warning lights before driving the vehicle.

Pushing

Vehicles with automatic transmissions cannot be started by pushing. Follow the directions under *If Your Vehicle Needs a Jump-Start.*

Downloaded from www.Manualslib.com manuals search engine

Warning Lights and Gauges

The instrument panel (dashboard) on your vehicle is divided into several different sections. The illustrations on the following pages show the major parts of the instrument panel that are described in this chapter. Some items shown may not be on all vehicles.

In your vehicle, the warning lights and gauges are grouped together in the instrument cluster and the indicator lamp module.

Downloaded from www.Manualslib.com manuals search engine

Downloaded from www.Manualslib.com manuals search engine

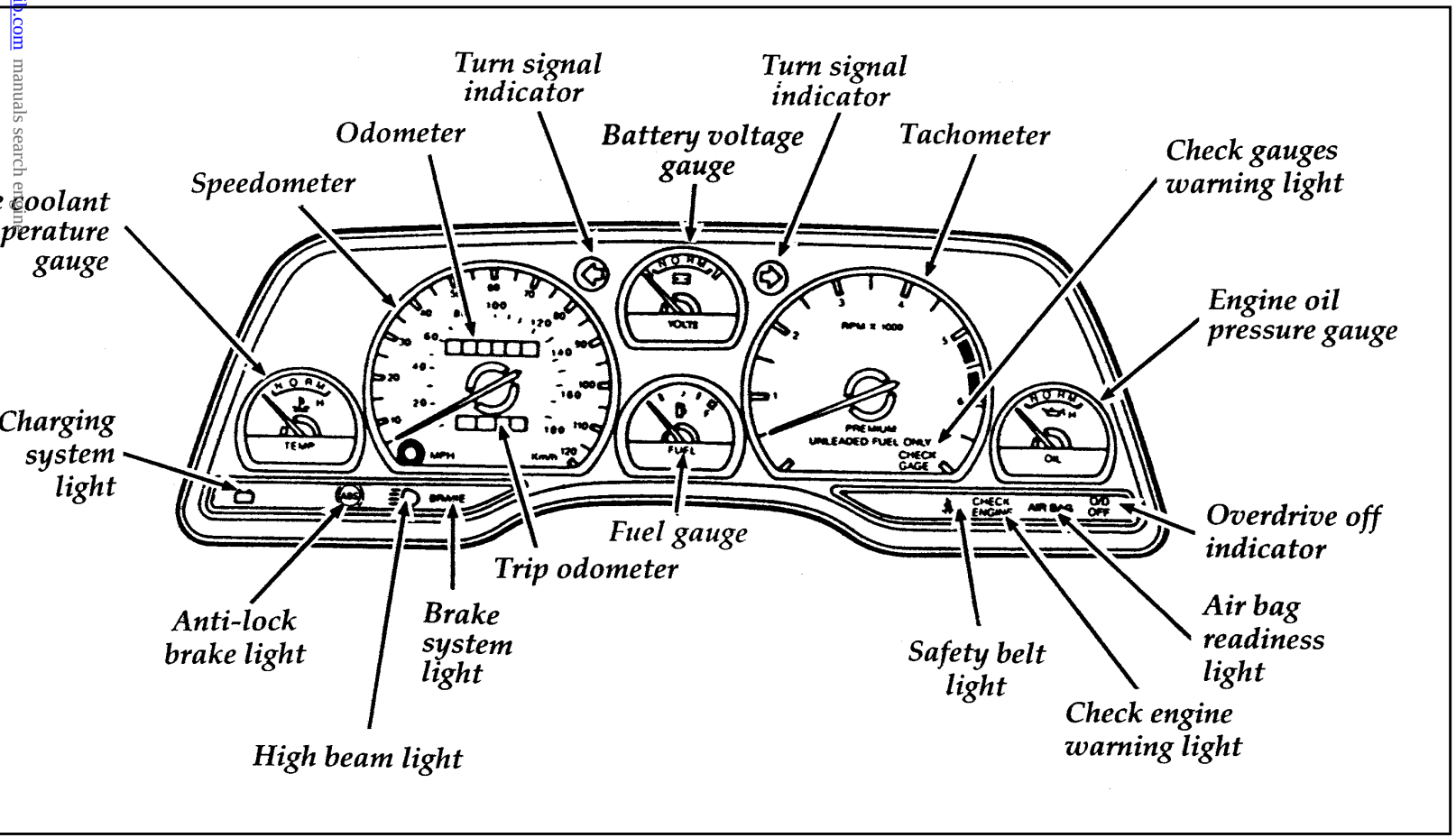

The Mechanical Cluster

The following warning lights and gauges are on the mechanical cluster. All of the warning lights and gauges alert you to possible problems with your vehicle. Some of the lights listed are optional. The following sections detail what each of these indicators means.

Brake System Warning Light

The warning light for the brakes can show two things — that the parking brake is not fully released, or that the brake fluid level is low in the master cylinder reservoir. If the fluid level is low, the brake system should be checked by a qualified service technician.

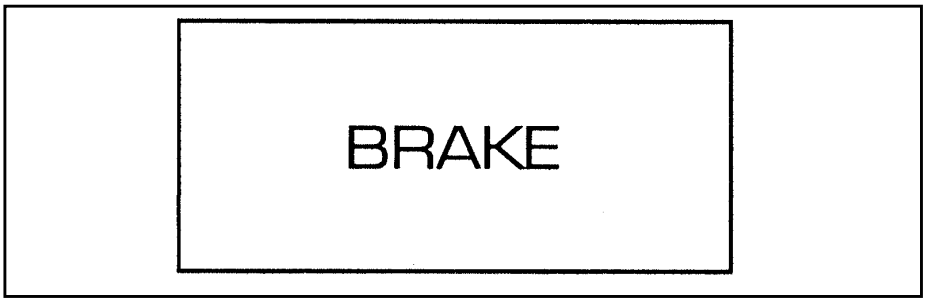

This light comes on when the parking brake is set, or if it is not set, it comes on briefly when you turn the ignition key to START. It normally goes off shortly after the engine starts and you release the parking brake. If the light stays on after you have fully released the parking brake, have the hydraulic brake system serviced.

⚠WARNING
The BRAKE light indicates that the brakes

Downloaded from www.Manualslib.com manuals search engine

Anti-Lock Brake System Light (If equipped)

This warning light will go on each time you start your vehicle. If it remains on for longer than five seconds, you should shut off your engine and restart. If the anti-lock brake light stays on, this indicates that the anti-lock feature is disabled and should receive immediate attention by a qualified service technician. Normal braking is not affected unless the brake warning light is also lit.

The Anti-Lock Brake System has self-check capabilities. As previously described, the system turns on the anti-lock light each time you start your engine. After the engine is started and the anti-lock light is out, the system performs another test the first time the vehicle reaches 14 mph (22 km/h). The system turns on the Anti-Lock Brake System (ABS) pump motor for approximately 1/2 second. At this time a mechanical noise may be heard. This is a normal part of the self-check feature. If a malfunction is found during this check the anti-lock light will come on.

Downloaded from www.Manualslib.com manuals search engine

⚠WARNING

If the anti-lock brake system warning light remains on or comes on while driving, have the braking system checked by a qualified service technician as soon as possible.

NOTE: If a fault occurs in the anti-lock system, and the brake warning light is not lit, the anti-lock system is disabled but normal brake function remains operational.

Safety Belt Warning Light and Chime

This warning light and chime remind you to fasten your safety belt. The following conditions will take place:

- ❑ If the safety belt is not buckled when the key is turned to the ON position, the light will come on for 1 to 2 minutes and the chime will sound for 4 to 8 seconds.
- ❑ If the safety belt is buckled while the light is on and the chime is sounding, both the light and chime will turn off.
- ❑ If the safety belt is buckled before the key is turned to the ON position, the light will come on for 1 to 2 minutes.

Downloaded from www.Manualslib.com manuals search engine

Air Bag Readiness Light

The air bag system uses a readiness light to indicate the condition of the system. If the system is functioning properly, the light will stay on for 6 seconds when the ignition switch is turned to the ON position.

If there is a problem with the system, two things may happen: the readiness light will either flash or stay lit up, or you will hear a beeping sound. If either of these things happen, have the air bag system serviced at your Ford or Lincoln-Mercury dealer immediately.

Charging System Light

This light indicates that your battery is not being charged and that you need to have the electrical system checked.

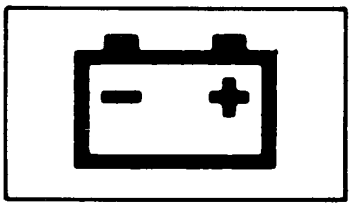

Downloaded from www.Manualslib.com manuals search engine

If the light stays on or comes on when the engine is running, have the electrical system checked as soon as possible.

Overdrive Off Indicator

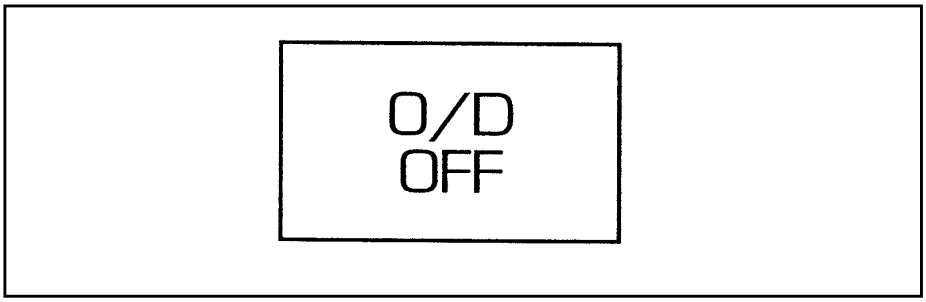

This light tells you that the Transmission Control Switch (TCS) on the gearshift lever has been pushed. When the light is on, the transmission will not shift into overdrive. Depressing the button on the shifter will return the vehicle to "overdrive on" mode. The transmission will be in the "overdrive on" mode when the vehicle is started even if the O/D OFF mode was selected when the vehicle was last shut off.

NOTE: If the light does not come on when the TCS is depressed or if the light flashes when you are driving, have your vehicle serviced at the first opportunity. If this condition persists, damage could occur to the transmission.

Downloaded from www.Manualslib.com manuals search engine

High Beam Light

This light comes on when the headlamps are turned to high beam or when you flash the lights.

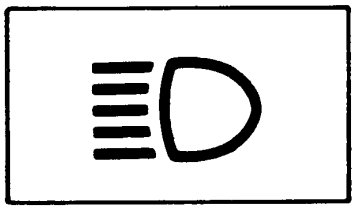

Check Gauges Warning Light (if equipped)

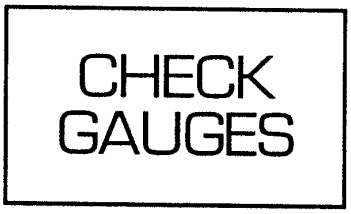

This light will come on when the key is in the ON position and the:

- ❑ engine coolant temperature gauge is high, or
- ❑ engine oil pressure gauge is low, or
- ❑ when the fuel tank has reached empty reserve.

This light serves as a reminder for you to check the engine coolant temperature gauge, the engine oil pressure gauge or the fuel gauge. It will come on if there is a condition that needs

Downloaded from www.Manualslib.com manuals search engine

Check Engine Warning Light

The Powertrain On-Board Diagnostic II (OBD II) system consists of the hardware and software necessary to monitor the operation of the powertrain. The OBD II system is designed to check the function of the vehicle's powertrain control system during normal operation. If an emission problem is detected, the Check Engine Warning Light (in the cluster) is turned on.

Modification or additions to the vehicle may cause incorrect operation of the OBD II system. Additions such as burglar alarms, cellular phones, and CB radios must be carefully installed. Do not install these devices by tapping into or running wires close to powertrain control system wires or components.

The light comes on briefly when you turn the ignition key to **ON**, but it should turn off when the engine starts. If the light does not come on when you turn the ignition to **ON** or if it comes on and stays on when you are driving, have your vehicle serviced as soon as possible. This indicates a possible problem with one of the vehicle's emission control systems. You do not need to have your vehicle towed in.

If the light turns on and off at one (1) second intervals while you are driving the vehicle, it means that the engine is misfiring. If this condition persists, damage could occur to the engine or catalytic convertor. Have your vehicle serviced at the first opportunity. You do not need to have your vehicle towed in.

Downloaded from www.Manualslib.com manuals search engine

If the light turns on and off on rare occasions while you are driving, it means that a malfunction occurred and the condition corrected itself.

An example of a condition which corrects itself occurs when an engine running out of fuel begins to misfire. In this case, the Check Engine Warning Light may turn on and will then set a Diagnostic Trouble Code indicating that the engine was misfiring while the last of the fuel was being consumed. After refueling, the Check Engine Warning Light will turn off after the vehicle has completed three consecutive warm up cycles without a misfire condition occurring. A warm up cycle consists of engine start from a cold condition (engine at ambient temperature) and running until the engine reaches normal operating temperature.

On the fourth engine start up, the Check Engine Warning Light will turn off as soon as the engine begins to crank. It is not necessary to have the engine serviced.

Under certain conditions, the Check Engine Warning Light may come on if the fuel cap is not properly installed. If the Check Engine Warning Light comes on and you suspect that the fuel cap is not properly installed, pull off the road as soon as it is safely possible and turn off the engine. Remove and replace the fuel cap, making sure it is properly seated.

After completing the three consecutive warm up cycles and on the fourth engine start up, the Check Engine Warning Light should turn off. If

Downloaded from www.Manualslib.com manuals search engine

Turn Signal Indicator Lights

The turn signal arrow will flash to indicate the direction in which you are going to be turning.

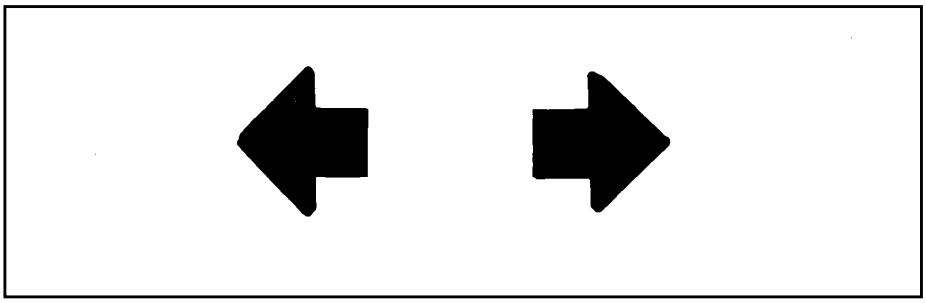

Fuel Gauge

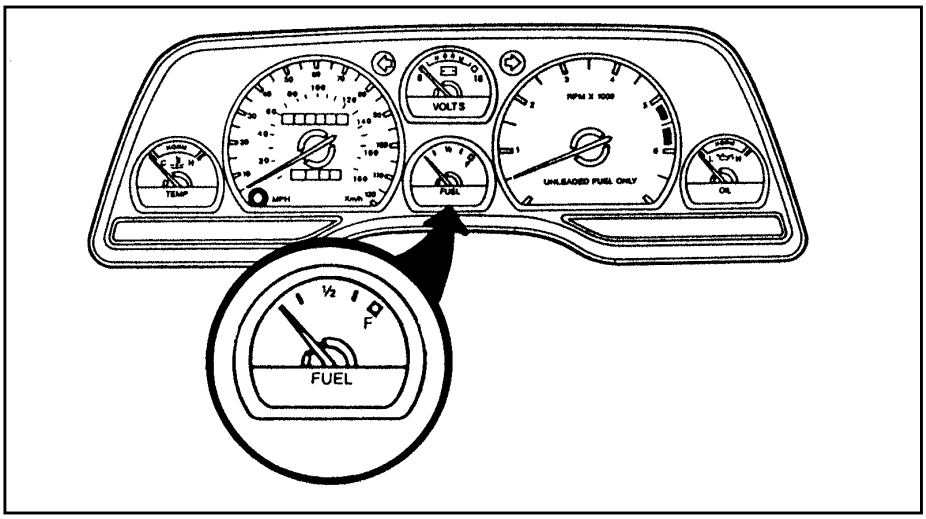

The fuel gauge

The fuel gauge displays approximately how much fuel is in the fuel tank only when the ignition switch is ON. For proper fuel gauge indication after adding fuel, turn the ignition switch OFF while refueling the vehicle.

The fuel gauge indicator may vary slightly when the vehicle is in motion. The most accurate reading is obtained with the vehicle on level

Downloaded from www.Manualslib.com manuals search engine

Engine Coolant Temperature Gauge

This gauge indicates the temperature of the engine coolant, not the coolant level. If the coolant is not at its proper level or mixture, the gauge indication will not be accurate.

The pointer moves from the C (cold) mark into the NORMAL band as your engine coolant warms up. Under normal driving conditions, the pointer should stay in the NORMAL band. It is acceptable for the pointer to fluctuate within the NORMAL band under normal driving conditions, and under certain driving conditions such as, heavy stop and go traffic, or driving up hills in hot weather, for the pointer to indicate at the top of the NORMAL band.

If, under any circumstances, the pointer moves above the NORMAL band, the engine is overheating and continued operation may cause engine damage.

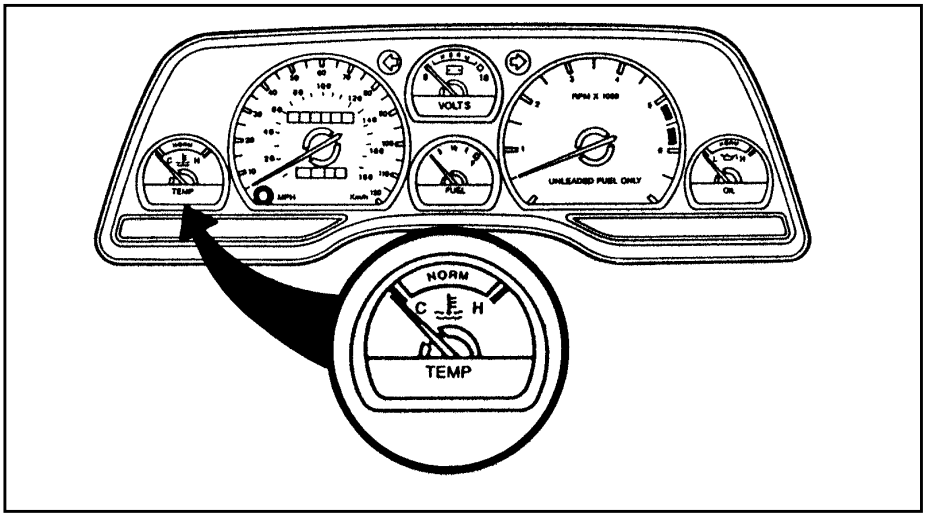

The engine coolant temperature gauge

Downloaded from www.Manualslib.com manuals search engine

If your engine coolant overheats:

1. Pull off the road as soon as safely possible.

2. Turn off the engine.

3. Let the engine cool. **DO NOT REMOVE COOLANT SYSTEM FILL CAP UNTIL THE ENGINE IS COOL.**

4. Check the coolant level following the instructions on checking and adding coolant to your engine, see *Engine Coolant* in the Index. If you do not follow these instructions, you or others could be injured.

If the coolant continues to overheat, have the coolant system serviced.

Speedometer

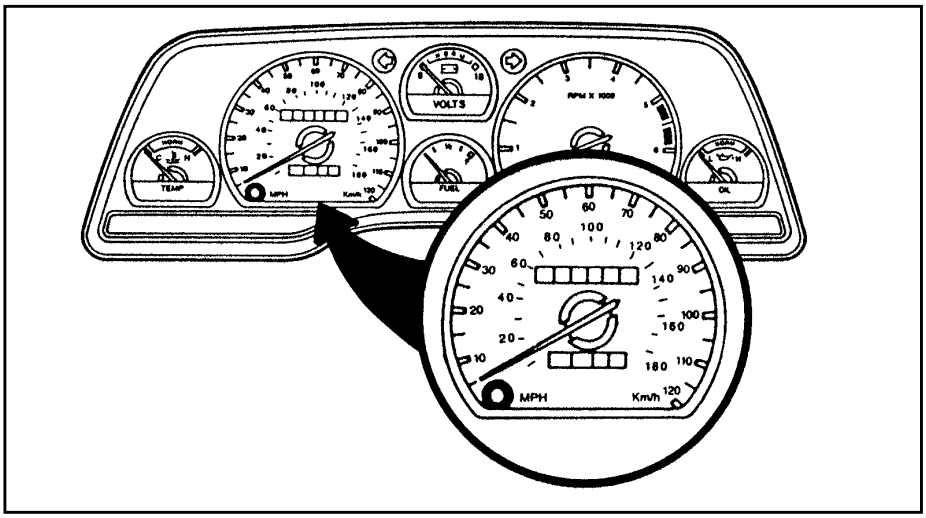

The speedometer

The speedometer tells you how many miles (kilometers) per hour your vehicle is moving.

Odometer

Downloaded from www.Manualslib.com manuals search engine

Trip Odometer

If you want to track your mileage up to 999.9 miles (kilometers), use the trip odometer. Simply set the trip odometer to zero by pressing the reset button firmly when beginning the distance you wish to measure.

Since the trip odometer displays distance independent of the odometer it will not always advance to the next mile (kilometer) at the same time as the odometer.

Tachometer

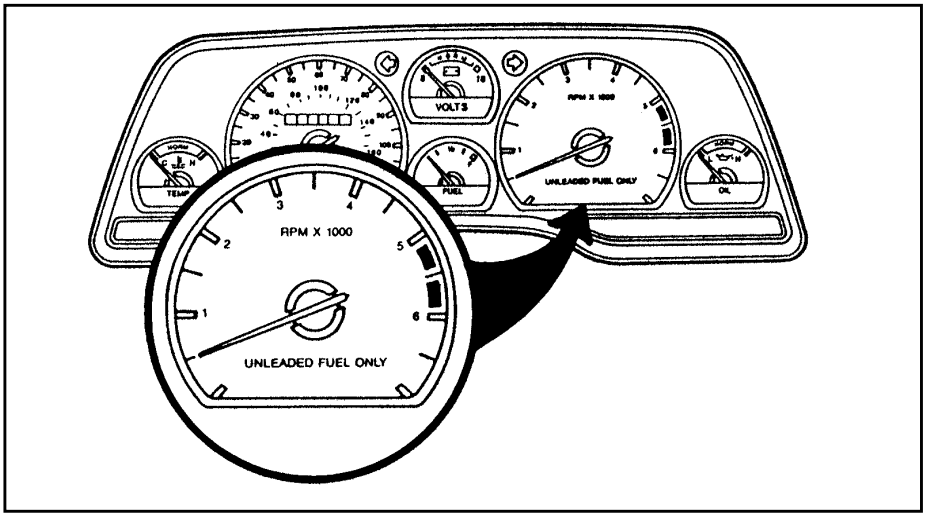

The tachometer

The tachometer displays the approximate engine revolutions per minute (rpm), or how fast the engine is running.

You can drive your vehicle at most rpm points on the tachometer but you must stay out of the red zone.

Regardless of the type of transmission in your

Downloaded from www.Manualslib.com manuals search engine

Battery Voltage Gauge (If Equipped)

This gauge shows you the battery voltage when the ignition key is in the ON position.

If the battery is operating under cold weather conditions, the pointer may indicate in the upper range of the NORMAL band while the battery is charging. If you are running electrical accessories (when the engine is off, or idling at a low speed), the pointer may move toward the lower end of the NORMAL band.

If it stays outside the NORMAL band, have your vehicle's electrical system checked as soon as it is safely possible.

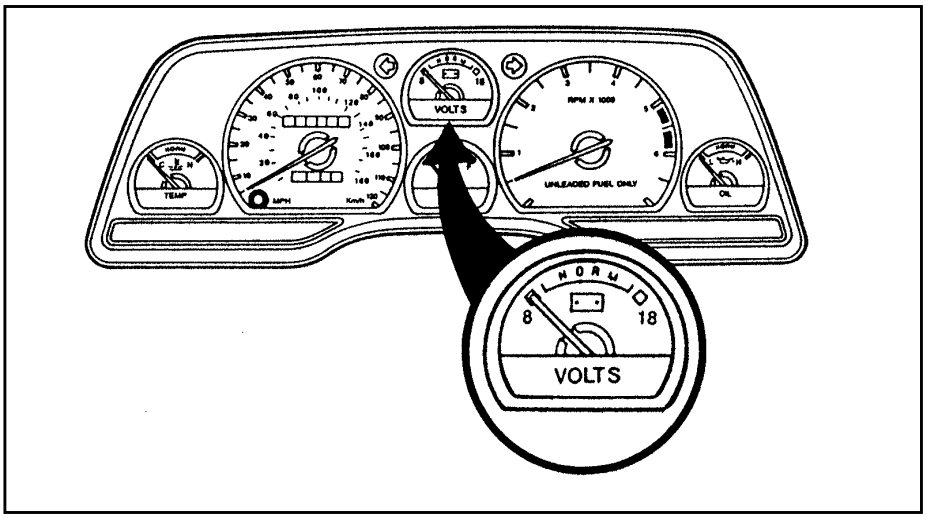

Battery voltage gauge

Engine Oil Pressure Gauge

This gauge indicates the engine oil pressure, not the oil level. However, if your engine's oil level is low, it could affect the oil pressure. With the engine running, the pointer should move into the NORMAL band. If the pointer drops below

Downloaded from www.Manualslib.com manuals search engine

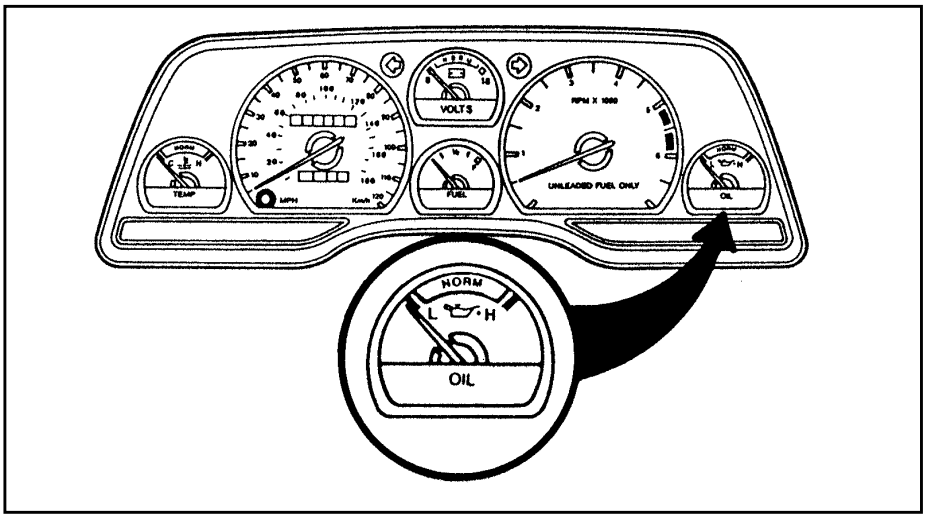

Engine oil pressure gauge

If you lose engine oil pressure:

1. Pull off the road as soon as safely possible.

2. Shut off the engine immediately or severe engine damage could result.

3. Check the engine's oil level, following the instructions on checking and adding engine oil, see the *Engine Oil* in the Index. If you do not follow these instructions, you or others could be injured. To assure an accurate reading, your car should be on level ground.

4. If the level is low, add oil as necessary before you start the engine again. Do not overfill. Do not operate the engine if the pointer is below the NORMAL band, regardless of the oil level. Contact your nearest dealer for further service actions.

For more information about adding oil, see *Engine Oil Recommendations* in the Index.

Downloaded from www.Manualslib.com manuals search engine

Indicator Lamp Module (If equipped)

The following warning lights are on the indicator lamp module. All of the warning lights alert you to possible problems. Some of the lights listed are optional. The following section details what each of these indicators mean.

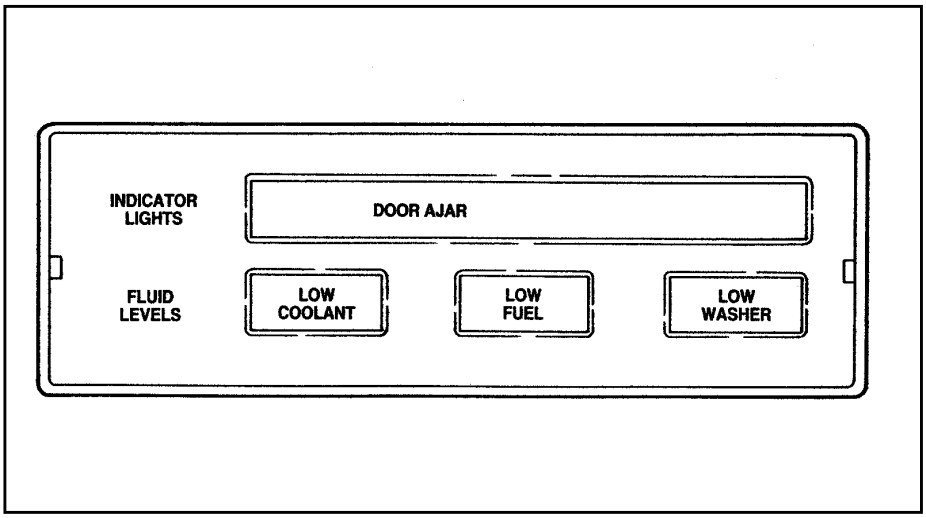

The indicator lamp module

Door Ajar Light (If equipped)

This light tells you when any door is not completely shut. It glows when the key is in the ON position.

The door ajar light

Downloaded from www.Manualslib.com manuals search engine

Low Coolant Light

This light indicates that the level of the engine coolant is low inside the coolant recovery bottle and that you should add more coolant. See *Engine Coolant* in the Index.

LOW
COOLANT

The low coolant light

Low Fuel Light

This light comes on when your fuel gauge indicates approximately 1/16 of a tank. Your car must be turned to ON for this light to come on. This light will either flicker or glow steadily.

LOW
FUEL

The low fuel light

Washer Fluid Low Light

This light comes on if the reservoir is less than a quarter full when you turn on the windshield washers.

Downloaded from www.Manualslib.com manuals search engine

Instrument Panel Controls

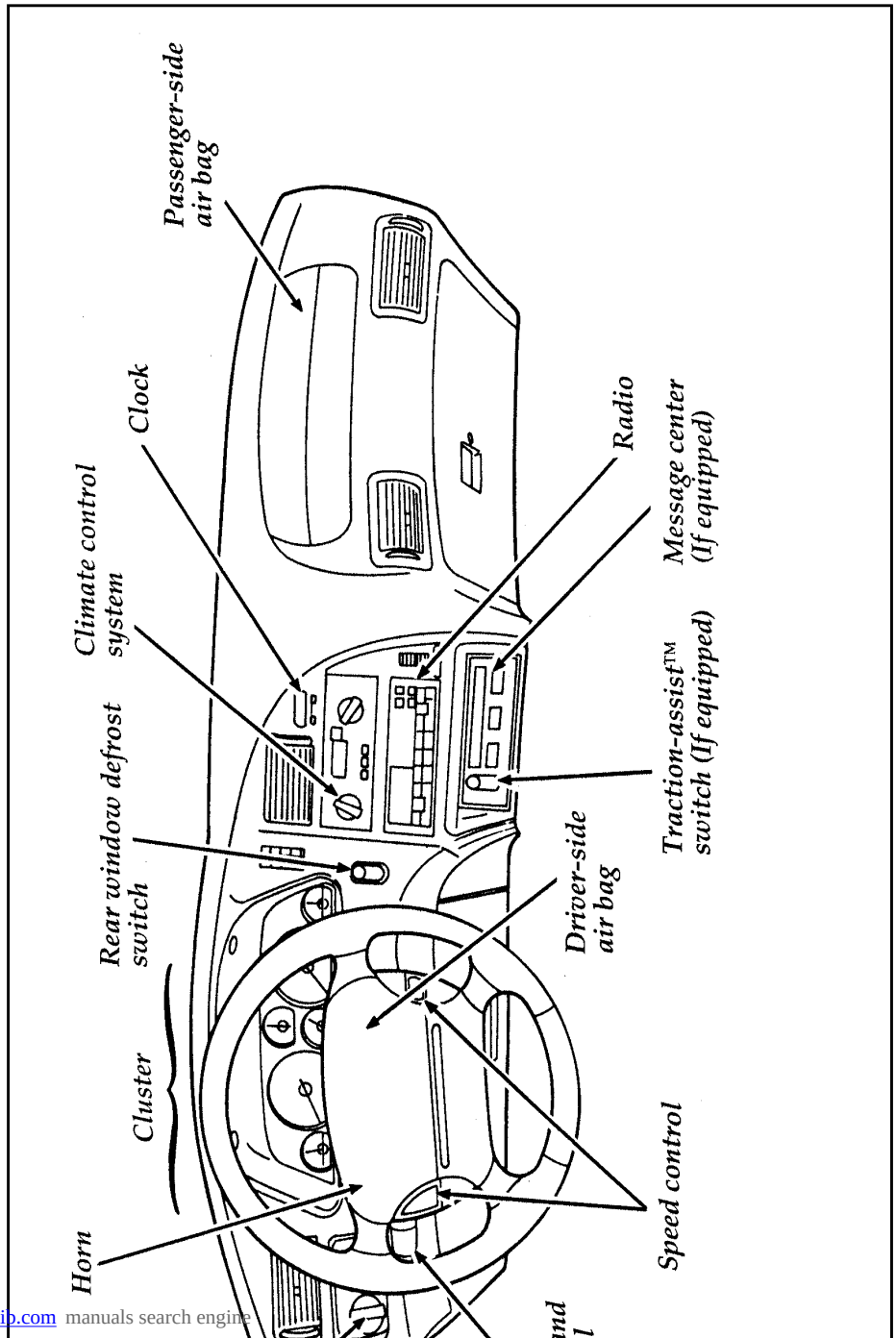

Downloaded from www.Manualslip.com manuals search engine

The main controls for the climate control system, clock, and radio are on the instrument panel.

NOTE: Any cleaner or polish that increases the gloss (shine) of the upper part of the instrument panel should be avoided. The dull finish in this area is to help protect the driver from undesirable windshield reflection.

The Climate Control Systems

Your vehicle has one of two different climate control systems. The two systems are:

- ❑ a manual heating and air conditioning system
- ❑ a semi-automatic temperature control system (if equipped)

If you are not sure which system your vehicle has, see the diagrams on the following pages.

The Manual Heating and Air Conditioning System

You can heat the inside of your vehicle, defrost the windshield, and turn on the air conditioning with the three knobs in the center of the instrument panel:

- ❑ FAN
- ❑ TEMP
- ❑ SELECT

Downloaded from www.Manualslib.com manuals search engine

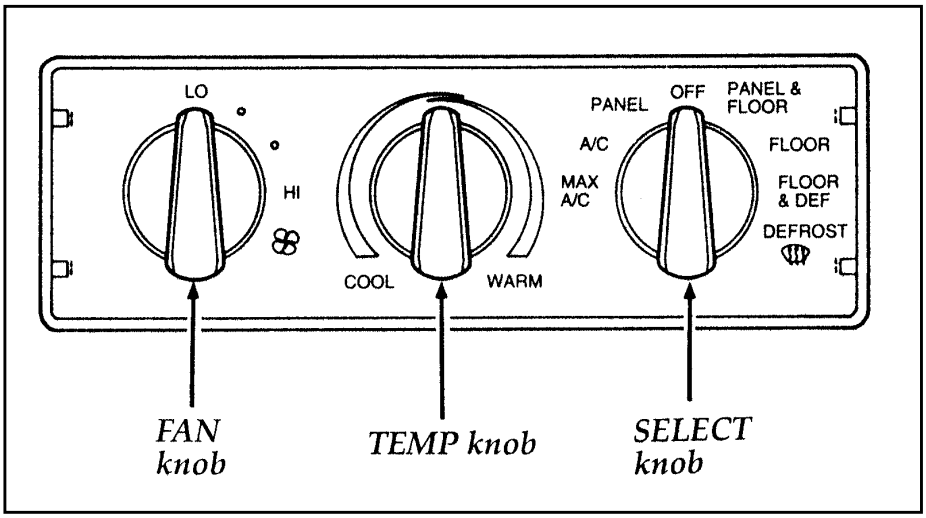

The knobs that control the manual heating and air conditioning system

To heat the interior of your vehicle, turn the SELECT knob to FLOOR, turn the TEMP knob to the end of the red range (full right) and turn the FAN knob to HI. Temperature and fan speed can be adjusted as desired.

To defrost the windshield and side windows, turn the SELECT knob to defrost, turn the TEMP knob to the end of the red range (full right) and turn the FAN knob to HI. Temperature and fan speed can be adjusted as desired.

To heat the interior and defrost the windshield and side windows, at the same time, turn the SELECT knob to FLOOR & DEF, turn the TEMP knob to the end of the red range (full right) and turn the FAN knob to HI.

To direct either heated or cooled air to the panel registers and the floor at the same time, turn the SELECT knob to PANEL & FLOOR, turn the TEMP knob for the temperature desired and set

Downloaded from www.Manualslib.com manuals search engine

To cool your vehicle using outside air, turn the SELECT knob to A/C, turn the TEMP knob all the way to the end of the blue range (full left) and turn the FAN knob to the desired speed between LO and HI. A/C provides quieter system operation than MAX A/C, but it is not as efficient as MAX A/C which uses recirculated air.

To ventilate your car with outside air, during mild weather, turn the SELECT knob to PANEL, turn the TEMP knob for the temperature desired and set the FAN knob to the speed desired.

Under normal conditions, the SELECT knob should be left in any position other than MAX A/C or OFF when the vehicle is parked. This allows the vehicle to “breathe” through the outside air inlet duct.

To cool your vehicle quickly in warm weather, turn the SELECT knob to MAX A/C, turn the TEMP knob all the way to the end of the blue range (full left) and turn the FAN knob to HI. MAX A/C uses recirculated air and is the most fuel efficient way to cool your vehicle and can also be used in heavy traffic to prevent exhaust fumes from entering the vehicle. MAX A/C can also be used in high humidity areas for more efficient operation.

If the interior of your vehicle is very warm, drive for the first few minutes with the windows open. This forces most of the hot, stale air out of the vehicle and allows the air conditioning to work faster.

Downloaded from www.Manualslib.com manuals search engine

Adjusting the panel register airflow

The instrument panel registers may be adjusted to your comfort needs. The thumbwheel controls the volume of air and the knob in the center of the register controls direction up or down or side to side.

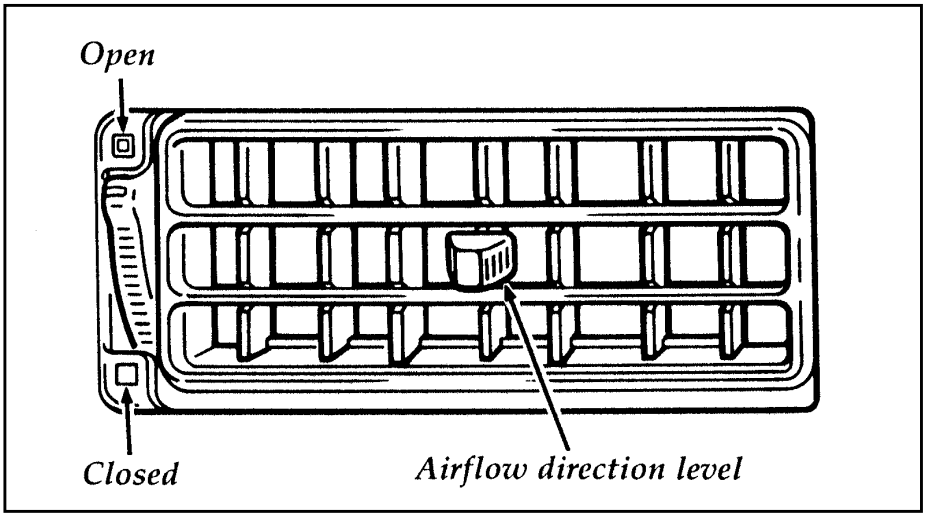

Controlling the airflow from panel registers

The Semi Automatic Temperature Control System (If equipped)

System Characteristics

The Semi Automatic Temperature Control System (SATC) is designed to provide comfort consistent with the temperature setting you select. The discharge air temperature and fan speed will be automatically controlled to bring the vehicle to the desired set temperature, as fast as possible, and then gradually be changed to maintain that temperature. The system also gives you the capability of manually adjusting the location of the discharge air and fan speed for desired comfort or specific operating requirements.

Downloaded from www.Manualslib.com manuals search engine

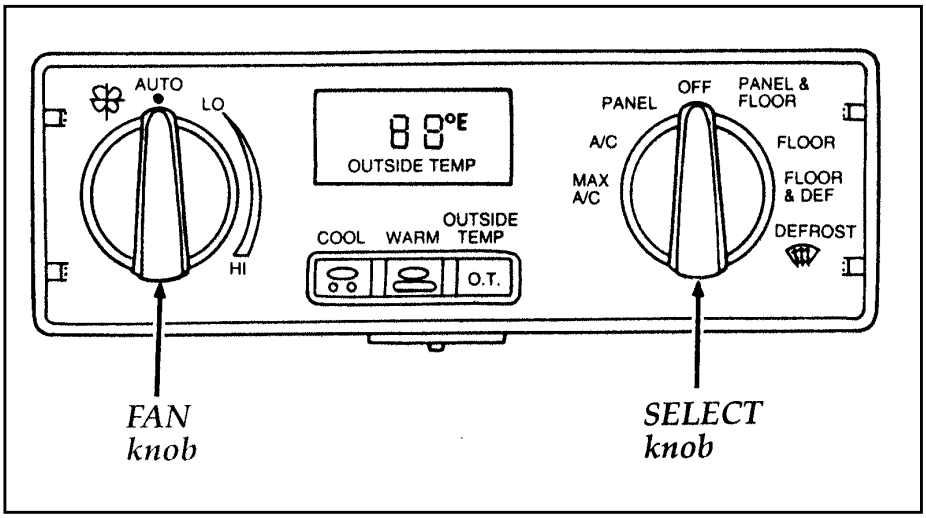

The controls for the Semi-Automatic Temperature Control system

System Controls

Digital display

The temperature you select for your driving comfort is displayed here. You can change the temperature by pressing either the COOL or the WARM button. You may also display outside temperature for four seconds by depressing the OUTSIDE TEMP button.

Cool button

This button is used to LOWER the temperature setting. Press the button once to lower the displayed temperature one degree. Holding the button in will continuously reduce the temperature setting in one degree increments until you either release it or 65˚F (18˚C) is reached.

If the button is pressed after 65˚F (18˚C) is reached, only 60˚F (16˚C) will be displayed and the system will provide continuous maximum

Downloaded from www.Manualslib.com manuals search engine

Warm button

This button is used to RAISE the temperature setting. Press the button once to raise the displayed temperature one degree. Holding the button in will continuously increase the temperature setting in one degree increments until you either release it or 85˚F (29˚C) is reached.

If the button is pressed after 85˚F (29˚C) is reached, only 90˚F (32˚C) will be displayed and the system will provide continuous maximum heating.

System Operation

To heat the inside of your vehicle, turn the SELECT knob to FLOOR and turn the FAN knob to AUTO. The fan will remain off until the engine reaches operating temperature or until 3-1/2 minutes have elapsed. As the interior of your vehicle warms up, the discharge air temperature and the fan speed will be automatically and gradually changed to maintain the set temperature. If you prefer a fixed fan speed, turn the fan speed switch to the desired setting.

To defrost the windshield and side windows, turn the SELECT knob to Defrost, turn the FAN knob to HI and set the temperature as necessary to clear the windshield.

To direct either cooled or heated air to the panel registers and the floor at the same time, turn the SELECT knob to PANEL & FLOOR, push the COOL or WARM button for the desired temperature and set the FAN speed as desired.

Downloaded from www.Manualslib.com manuals search engine

To cool your car quickly in warm weather, turn the SELECT knob to MAX A/C and turn the FAN knob to AUTO. As the vehicle interior cools down, the discharge air temperature and fan speed will automatically and gradually be changed to maintain the set temperature with airflow from the instrument panel registers.

If the interior of your vehicle is very warm, drive for the first few minutes with the windows open. This will force the hot, stale air out and allow the air conditioning to work faster.

To cool your vehicle with outside air, turn the SELECT knob to A/C and turn the FAN knob to AUTO or to a fixed speed setting as you desire. Cooling your vehicle in this manner provides a quieter system operation, but it will not cool as efficiently and is not as fuel efficient as MAX A/C which uses recirculated air.

To ventilate your vehicle with outside air, turn the SELECT knob to PANEL and the FAN knob to AUTO. The fan will remain off until the engine is warm enough to provide heat. However, if the interior temperature is above the set temperature, the fan will turn on immediately. Temperature may be set as desired and FAN speed can be selected.

A/C compressor override

The A/C compressor can be disengaged for more economical driving. This can be done by turning the SELECT knob to PANEL. The A/C compressor is automatically engaged by the control in MAX A/C, NORM A/C, FLOOR & DEF, and DEFROST positions if the outside

Downloaded from www.Manualslib.com manuals search engine

Rear Window Defroster (If equipped) (Standard in Canada)

The defroster for the rear window clears frost, fog, or thin ice from both the inside and outside of the rear window.

The button for the rear window defroster is located on the lower right side of the instrument panel, just left of the climate control panel.

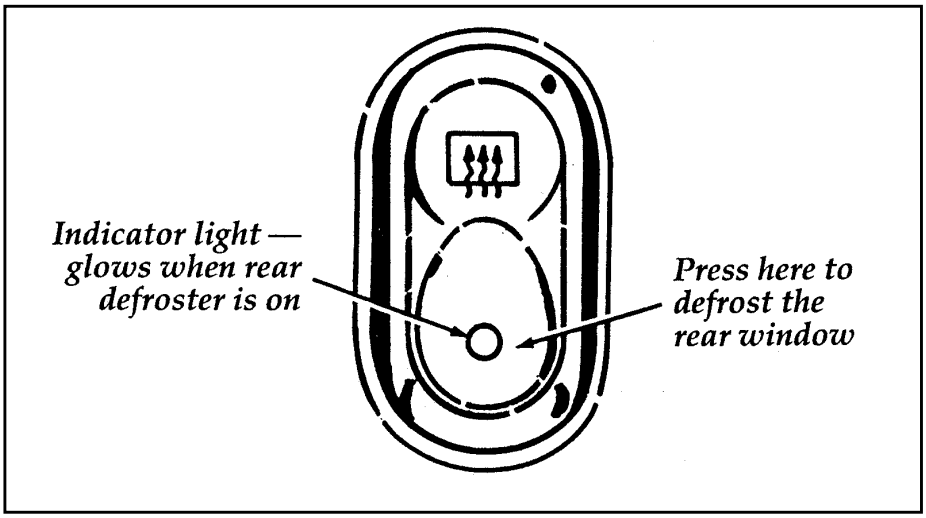

The button that controls the rear window defroster

Clear away any snow that is on the rear window before using the defroster. With the engine running, push the defrost button.

After approximately 10 minutes, the defroster will turn off. If the window is still not clear, turn the defroster on again.

The defroster will turn off when the ignition key is turned to the OFF position.

The heating elements are bonded to the inside of the rear window. Do not use sharp objects to

Downloaded from www.Manualslib.com manuals search engine

The Interior and Exterior Lights

Daytime Running Light System

(Canadian vehicles only)

The Daytime Running Light (DRL) system turns the high beam headlamps on, with a reduced light output, when:

- ❑ The headlamp system is in the OFF position, and
- ❑ The vehicle is running, and
- ❑ The vehicle has a fully released parking brake.

NOTE: If you have a vehicle with an automatic lighting system, the DRL system is active until the automatic system turns on the headlamps.

NOTE: The high beam indicator will not turn on in the flash-to-pass mode during nighttime driving.

NOTE: You may notice that the lights flicker when the vehicle is turned on or off. This is a normal condition.

⚠WARNING
The Daytime Running Light (DRL) system will not illuminate the tail lamps and parking lamps. Turn on your headlamps at dusk. Failure to do so may result in a collision.

Downloaded from www.Manualslib.com manuals search engine

Turning On the Exterior Lights

To turn on the headlamps, parking lamps, side markers, and tail lamps, use the rotary knob that is to the left of the steering wheel.

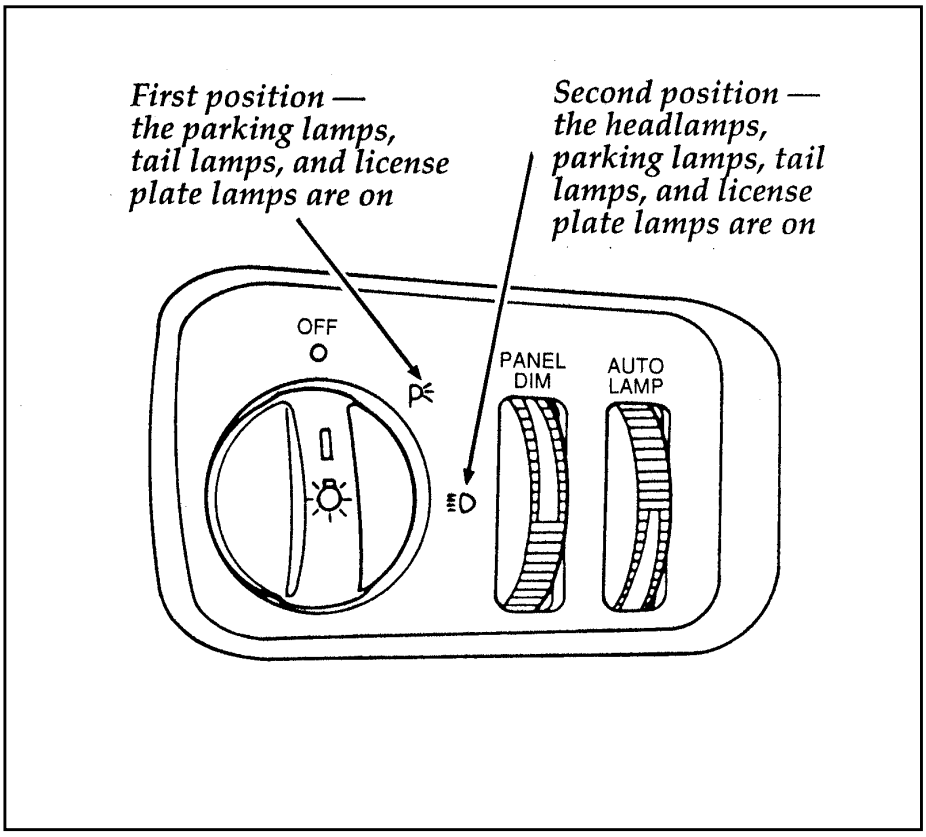

The knob that controls the headlamps and parking lamps (shown with autolamp feature — other models similar)

When you turn on the headlamps, the parking lamps, tail lamps, and side markers automatically turn on. But you can turn on the parking lamps, tail lamps, and side markers without turning on the headlamps.

For more information about how the high beams work, refer to the *Steering Column Controls* chapter.

Downloaded from www.Manualslib.com manuals search engine

Chime for headlamps on

This chime sounds if the driver or any passenger door is open when the parking lamps or headlamps are on. The chime sounds until you close the door, turn off the lamps or turn the ignition to the ON position.

Cleaning the Exterior Lamps

Do not use dry paper towel, chemical solvents or abrasive cleaners to clean the lamps, as these may cause scratches or crack the lamps.

Setting the Autolamp Delay System (If equipped)

The autolamp sets the headlamps to turn on and off automatically. You can use the autolamp to:

- ❑ turn on the lamps automatically at night
- ❑ turn off the lamps automatically during daylight
- ❑ keep the lamps on for up to three minutes after you turn the key to OFF.

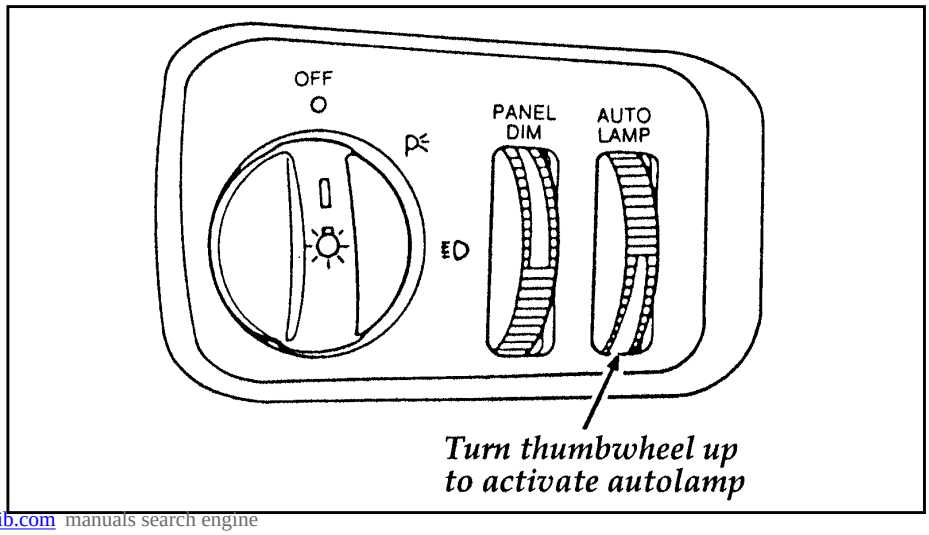

Downloaded from www.Manualslib.com manuals search engine

To set the autolamp:

1. Make sure the headlamp knob is in the OFF position. If the knob for the headlamps is ON, you cancel the autolamp.
2. Turn the ignition key to ON or start your vehicle.
3. Find the autolamp thumbwheel to the right of the panel dim thumbwheel.
4. Turn the thumbwheel up to the beginning of the MAX position (within the DELAY range).
5. The autolamp automatically turns the lamps on and off for you.

Do not put any articles on top of the photocell that is located in the top left corner of the instrument panel. This photocell controls the autolamp. If you cover it, the photocell reacts as if it is nighttime, and the lamps turn on.

To turn the autolamp off, move the thumbwheel back to OFF.

You can set the autolamp so the lamps stay on for up to three minutes after you turn your vehicle off.

To keep the lamps on after you leave your vehicle, turn the thumbwheel as far into the MAX range as you want.

If you move the thumbwheel only slightly into the DELAY area, your lamps will stay on for only a moment after you turn your vehicle off. The further you move the thumbwheel into the DELAY area (toward the MAX position), the longer the lamps will stay on after you turn

Downloaded from www.Manualslib.com manuals search engine

Lighting Up the Interior and Instrument Panel

Manual operation

With the light knob in the parking lamps or the headlamps position, you can brighten or dim the lights in the instrument panel. To do this, use the thumbwheel to the left of the steering wheel. This wheel also turns on the interior lights with the light knob on or off.

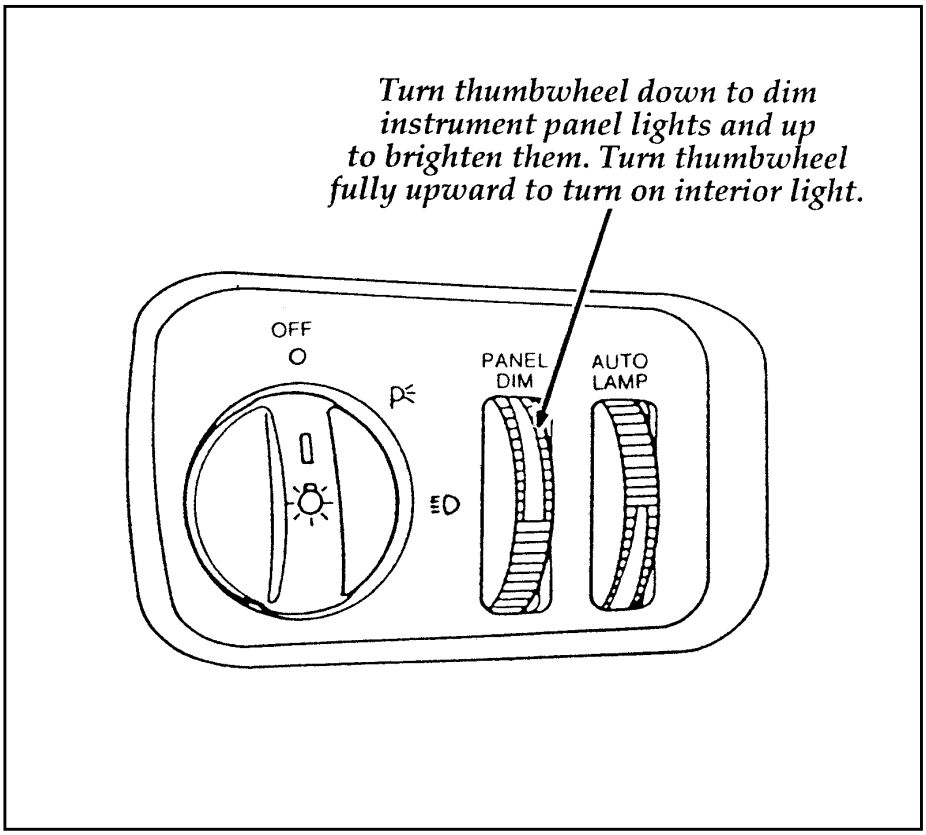

The thumbwheel controls the light on the instrument panel and the interior light

Downloaded from www.Manualslib.com manuals search engine

Using the Automatic Illuminated Entry System (If equipped)

The interior lights turn on when you lift the outside door handle on either front door, when any button of the keyless entry system is pushed or when you press UNLOCK, TRUNK, or PANIC on a programmed remote entry transmitter if your vehicle is equipped with remote entry.

These lights automatically turn off after 25 seconds or when you turn the ignition key to ON or ACC. The inside lights will not turn off if your have turned them on manually or if a door is open.

Tips on the illuminated entry system:

- ❑ The illuminated entry timer will not turn off the courtesy lamp if that lamp has been turned on manually or by the door switch.
- ❑ Occasionally, you will need to clean the lens of the door lock assembly. Use Ford Multi-Purpose Cleaner Concentrate, a mild soap, or household ammonia and water solution. Apply with a soft cloth or cotton swab, followed by a clear water rinse.

Downloaded from www.Manualslib.com manuals search engine

Turning on the Map and Reading Lamps

Your vehicle has two map lamps for the passenger and the driver. To turn on the map lamps, push the switch next to each lamp.

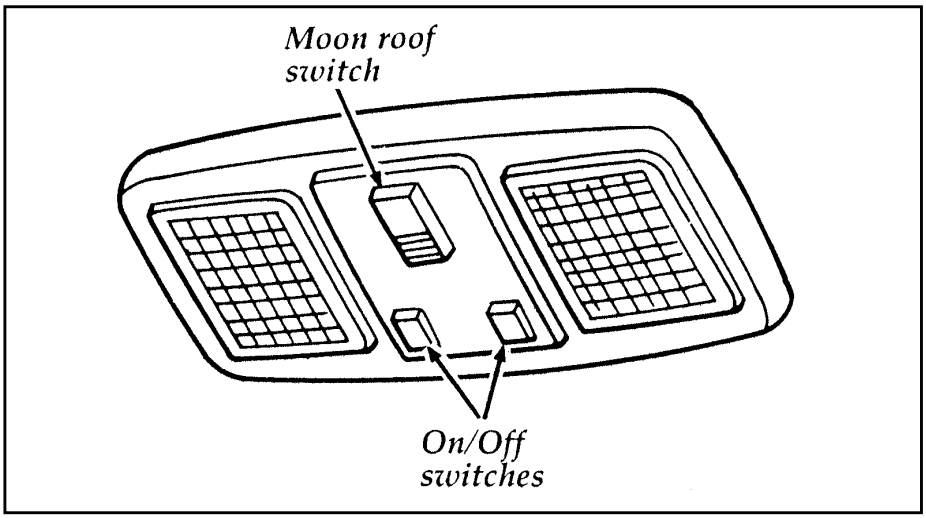

Map lamp (with optional moon roof)

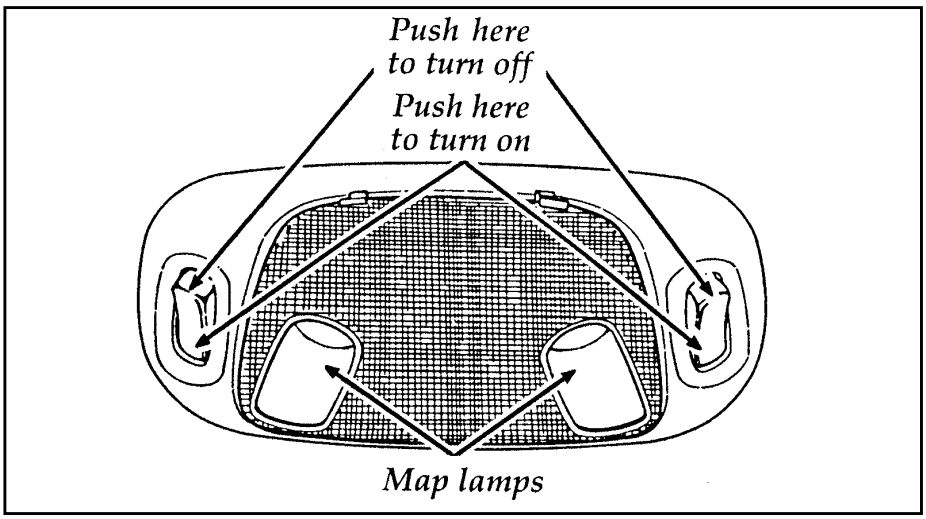

Front seat map and dome lamps (without optional moon roof)

The dual beam map lamps are located on each side of the dome lamp. Each map lamp can be turned on by the switches on the lamp.

Downloaded from www.Manualslib.com manuals search engine

Rear Seat Courtesy Lamps

Your vehicle has rear seat courtesy lamps which are activated when the interior lights are turned on. These lamps are located on the quarter trim panels.

Cleaning the Interior Lamps

Your interior dome lamps and map lamps are plastic and should be cleaned with a mild detergent diluted in water. Rinse them with clear water.

Clock

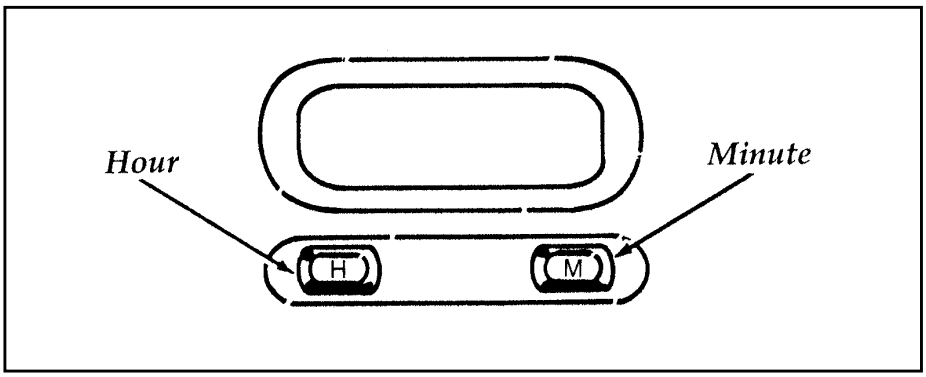

The digital clock

1. To set the hour, press and hold the H button. When the desired hour appears, release the button.

2. To set the minutes, press and hold the M button. When the desired minute appears, release the button.

Downloaded from www.Manualslib.com manuals search engine

Cellular Phone (If equipped)

For information about the cellular phone in your vehicle, refer to the *Cellular Phone User's Manual* provided with your phone. For further questions about your Ford or Lincoln-Mercury cellular phone, contact the Ford Cellular System at 1-800-367-3013. In Canada contact your Ford Dealer.

NOTE: It is recommended that you remove your cellular phone antenna before entering a car wash. Unscrew the antenna from its base, located on the rear window.

Cleaning the Instrument Panel Lens

Clean the instrument panel lens with a soft cloth and a glass cleaner, such as Ford Ultra-Clear Spray Glass Cleaner, or equivalent. Do not use paper towel or any abrasive cleaner to clean the lens as these may cause scratches.

Downloaded from www.Manualslib.com manuals search engine

Steering Column Controls

The controls on the steering column and wheel are designed to give you easy access to the controls while you are driving.

The Turn Signal Lever

You can use the turn signal lever on the left side of the steering column to:

- ❑ operate the turn signals
- ❑ turn the high beams on/off
- ❑ flash the lights
- ❑ turn the windshield wipers and washer on/off

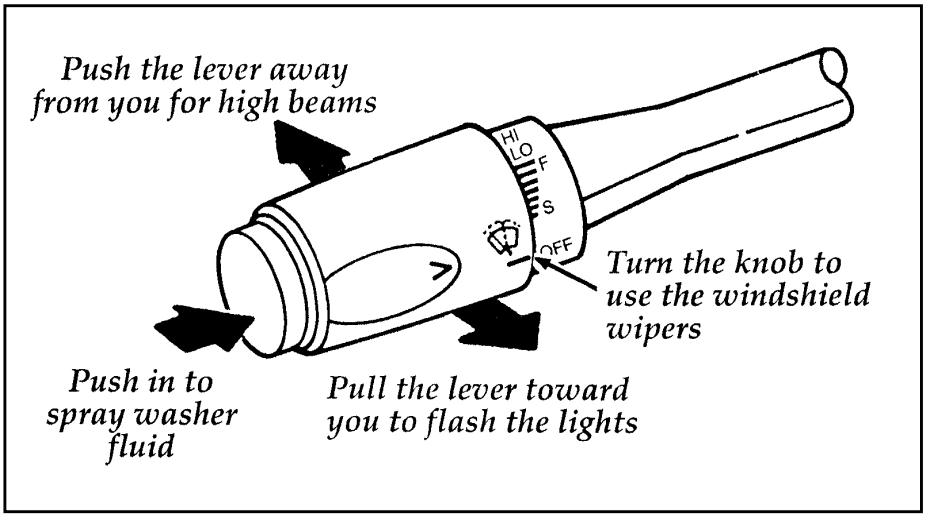

The turn signal lever

Turn Signals

Downloaded from www.Manualslib.com manuals search engine

If the turn signal stays on after you turn, move the lever back to the center (off) position.

For lane changes, move the lever far enough to signal but not to latch. The lever will return to the off position when you release it.

High Beams

To turn on the high beams, turn the headlamp control knob to the headlamp ON position and push the turn signal lever away from you until it latches. When the high beams are ON, the high beam indicator light on the instrument panel comes on.

To turn off the high beams, pull the lever toward you until it latches. The high beam indicator light turns off.

Flashing the Lights

To flash the headlamps, pull the lever toward you for a moment and then release it. The headlamps will flash whether the headlamp knob is in the on or off position.

Windshield Wipers and Washer

To turn on the windshield wipers, the ignition key must be turned to the ON or ACC position.

Rotate the end of the lever away from you to activate the wipers. The first seven detents are interval wipe positions, the eighth detent is the LO position and the ninth detent is the HI position.

Downloaded from www.Manualslib.com manuals search engine

Variable Interval Wipers

In addition to two speed wipers, your vehicle has wipers that you can set to operate at varying intervals. For example, you can set the interval so they wipe less often when it drizzles or more often in heavier rain.

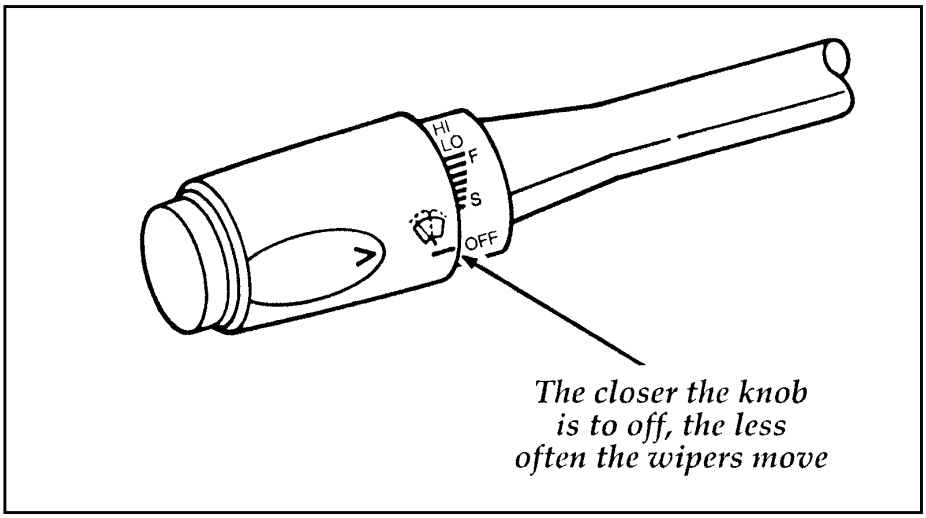

The variable interval wiper on the turn signal lever

To set the interval wipers, turn the knob at the end of the turn signal lever toward or away from you until the wipers are going at the desired interval.

Windshield Washer

To clean the windshield, push in the end of the wiper knob. For a constant spray, keep the knob pushed in. After you release the knob, the wipers operate for two to three cycles before turning off (if the wipers were OFF) or returning to HI, LO, or the interval setting selected.

If the washer does not work, check the washer

Downloaded from www.Manualslib.com manuals search engine

Do not try to clean the windshield when the washer fluid container is empty or activate the washers at any time for more than 15 seconds continuously. This could damage the washer pump system.

⚠WARNING
In freezing weather, the washer solution may freeze on the windshield and obscure your vision. Always warm up the windshield with the defroster before you use the washer fluid. If you cannot see through the windshield clearly, it can increase the risk of being involved in a collision.

For information about refilling the washer fluid or replacing your windshield wiper blades, see *Windshield washer fluid and Wipers* in the Index.

Hazard Flasher

To alert other drivers to hazardous situations, push in the hazard flasher on the top of the steering column. The same switch turns the flashers off.

The flashers work whether your vehicle is running or not. The flashers work for up to two hours when the battery is fully charged and in good condition without draining the battery excessively. If the flashers run for longer than two hours or if the battery is not fully charged, the battery can be drained.

Downloaded from www.Manualslib.com manuals search engine

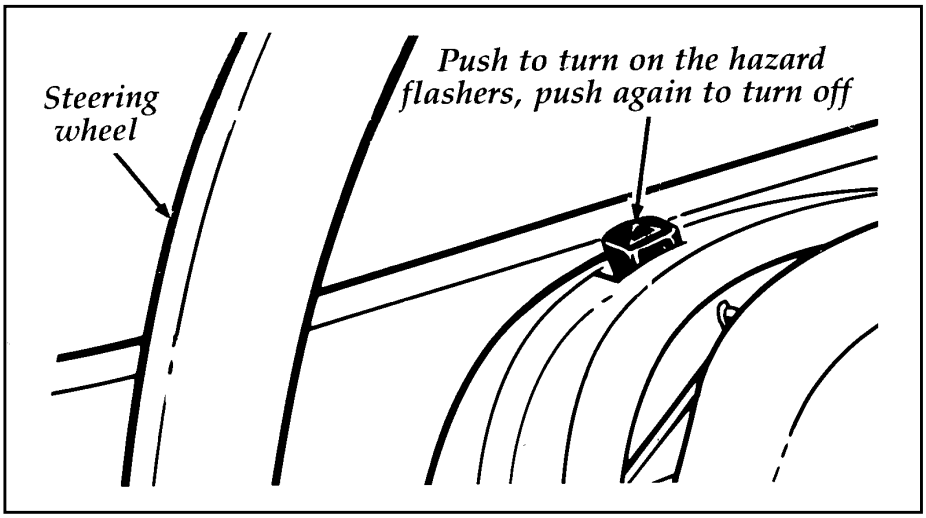

The control switch for the hazard flashers

Horn

To sound the horn, push the center pad area of the steering wheel.

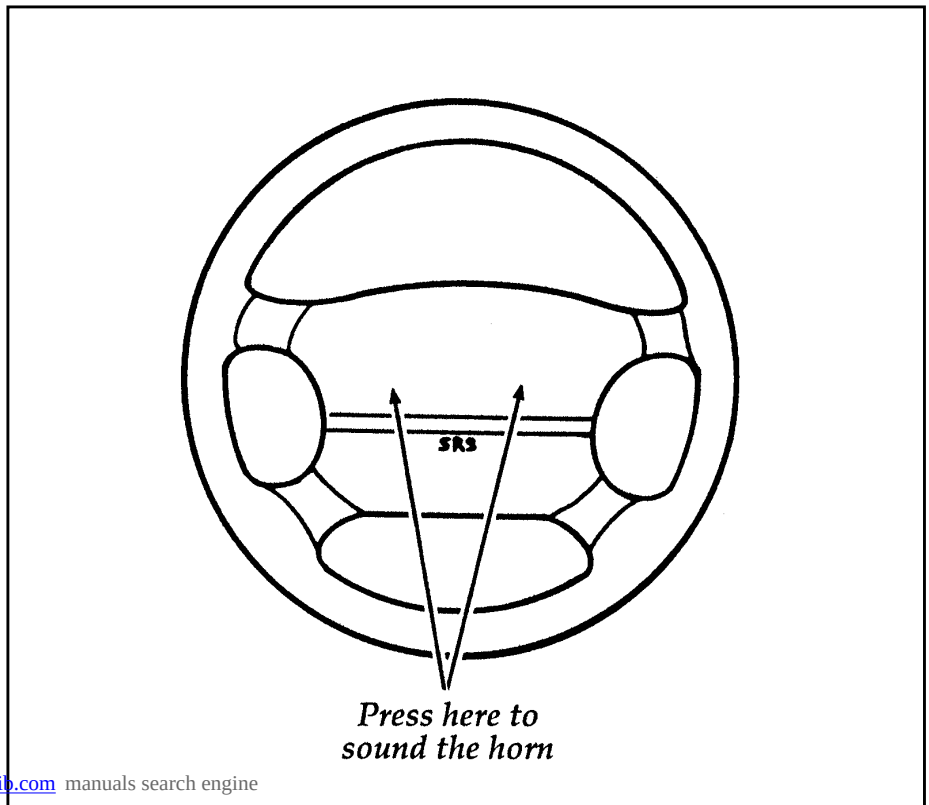

Downloaded from www.Manualslib.com manuals search engine

Tilt Steering

⚠WARNING

Never adjust the steering wheel when the vehicle is moving.

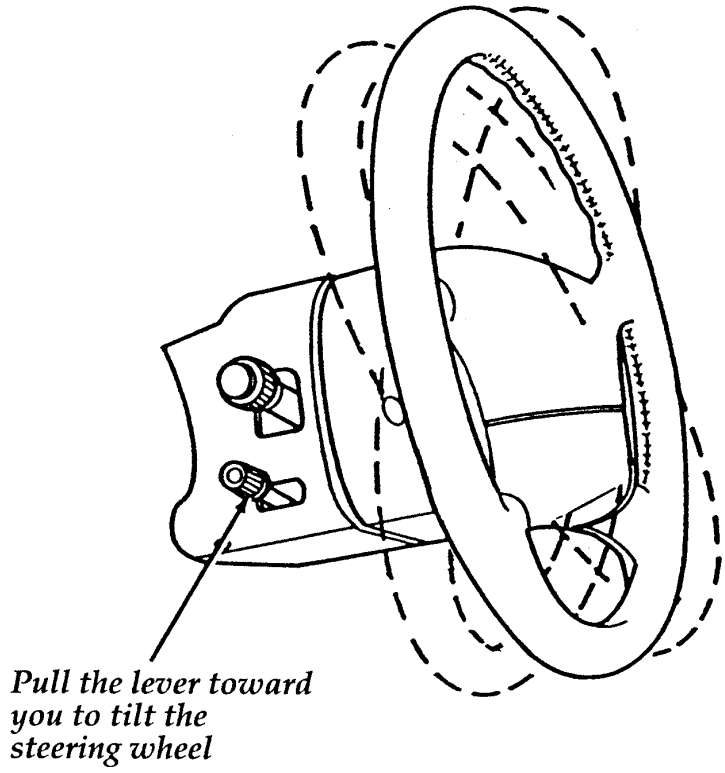

The lever to tilt the steering wheel

To change the position of the steering wheel, pull the release lever on the column toward you. Tip the steering wheel to the desired position. Release the lever to lock the steering wheel in place.

Downloaded from www.Manualslib.com manuals search engine

Speed Control (If equipped)

If your vehicle has speed control, you can automatically maintain a constant speed at or above 30 mph (50 km/h).

Use of radio transmitting equipment that is not Federal Communications Commission (FCC) or in Canada the Canadian Radio and Telecommunications Commission (CRTC) approved may cause the speed control to malfunction. Therefore, use only properly installed FCC (CRTC in Canada) approved radio transmitting equipment in your vehicle.

NOTE: When driving in hilly terrain, at high elevations, or when pulling a trailer, it may be desirable to drive with the transmission in the Overdrive off mode. This can be done by depressing the Transmission Control Switch on the transmission gear selection lever. Driving in this mode prevents the transmission from shifting excessively when ascending grades, and helps maintain speed when going down steep hills.

NOTE: Do not shift to N (Neutral) when using the speed control. This will cause the engine to overspeed.

When driving uphill, especially with a heavy load, significant speed drops may occur. If the speed drops more than 10 mph (16 km/h) the automatic speed control will, by design, be suspended. Some vehicles may require

Downloaded from www.Manualslib.com manuals search engine

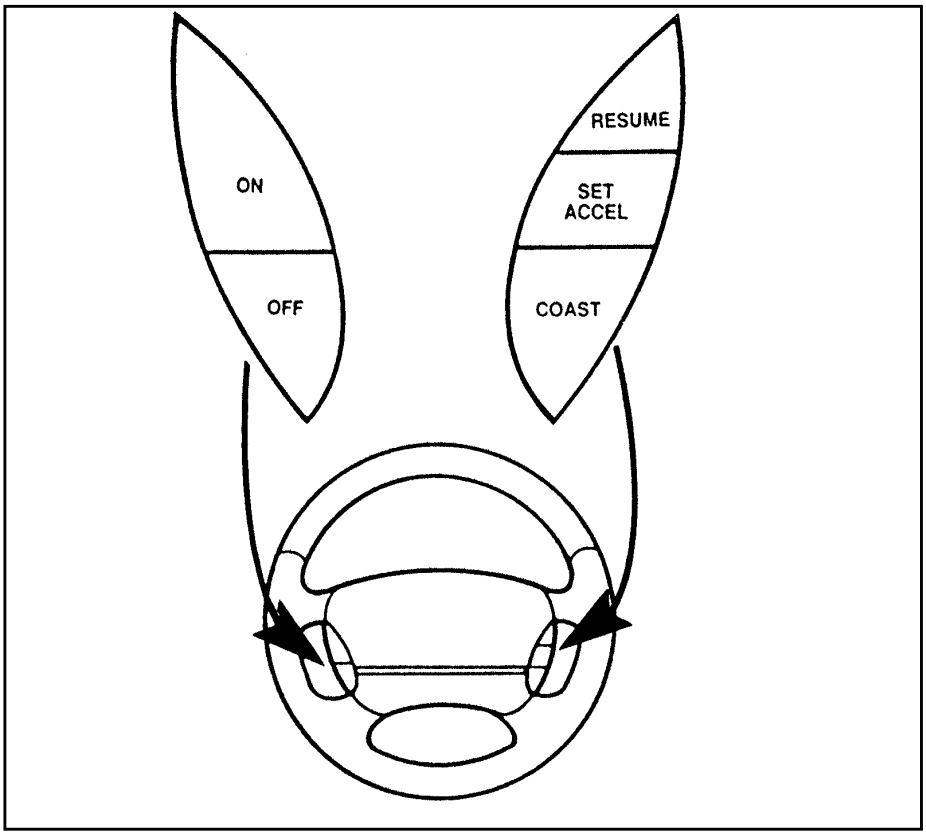

The speed control switches on the steering wheel

To set the speed control:

1. Press and release the ON switch.

2. Accelerate to the desired speed above 30 mph (50 km/h) using the accelerator pedal.

3. Press the SET ACCEL switch and release it immediately to set your speed. If you keep this switch pressed, your speed will continue to increase.

4. Take your foot off the accelerator pedal. Your vehicle will maintain the speed you set.

If you drive up or down a steep hill, your

Downloaded from www.Manualslib.com manuals search engine

NOTE: If your speed increases above your set speed while driving in D (Drive) on a downhill grade, you may want to depress the Transmission Control Switch located on the shift lever to turn off overdrive to reduce vehicle speed. Speed control cannot reduce the vehicle speed if it goes above your set speed on a downhill grade.

⚠WARNING
Do not use the speed control in heavy traffic or on roads that are winding, slippery, or unpaved.

Accelerating With the Speed Control Operating

You can use the accelerator pedal to speed up momentarily. When you take your foot off the accelerator, the vehicle will return to the set speed.

Resetting the Speed Control

To reset the speed control to a **lower speed**, use one of the following procedures:

- ❑ **COAST —** Press and hold the COAST switch. Release the switch when the vehicle slows down to the desired speed.
- ❑ Lightly tap the brake pedal. When the vehicle attains the desired speed, press the SET ACCEL switch and release it immediately.

Downloaded from www.Manualslib.com, manuals search engine

If vehicle speed is reduced below 30 mph

To reset the speed control to **a higher speed**, follow one of these procedures:

- ❑ **ACCEL —** Press and hold the SET ACCEL switch. Release the switch when the vehicle has accelerated to the desired speed.
- ❑ Depress the accelerator pedal. When the vehicle attains the desired speed, press the SET ACCEL switch and release it immediately.

Cancelling and Resuming a Set Speed

If you press the brake pedal, speed control is suspended. You can return to the set speed by pressing the RESUME switch, as long as you did not press the OFF switch. You must be driving at least 30 mph (48 km/h).

Your vehicle will gradually return to the previously set speed and then maintain it.

To Turn Speed Control Off

Press the OFF switch.

Speed control is also turned OFF each time the vehicle ignition is shut off.

Downloaded from www.Manualslib.com manuals search engine

Features

Your vehicle has a variety of features designed for your comfort, convenience and safety. Read this chapter to find out about standard and optional features.

Doors

Anti-theft front door lock knobs

Anti-theft lock knobs are designed to prevent unlocking the door by pulling up on the lock knob. To unlock and open the front door from inside the vehicle, pull on the inside door handle.

Downloaded from www.Manualslib.com manuals search engine

Power Door Locks (If equipped)

If your vehicle has power door locks, the controls to lock the doors are on the trim panel of the front door. When you close the doors after you set the door locks, the doors remain locked. If the power mechanism fails, the manual door locks will override the power controls. Pulling on a front inside door handle will automatically override and release the front door lock.

Power door locks on vehicles equipped with keyless entry will activate when the interior courtesy/dome lamps are turned on or off using the instrument panel dimmer or thumbwheel control.

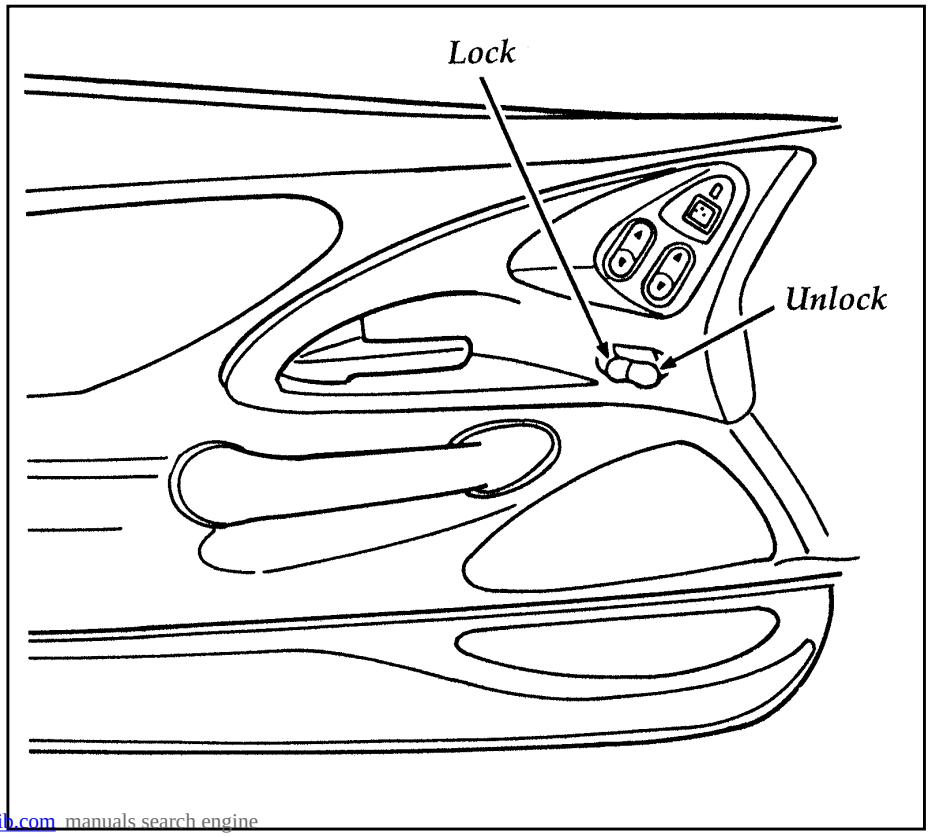

Downloaded from www.Manualslib.com manuals search engine

Using the Illuminated Entry System (If equipped)

The interior lights turn on when you lift the outside door handle on either front door when you press UNLOCK, TRUNK, or PANIC on a programmed remote entry transmitter if your vehicle is equipped with remote entry.

These lights automatically turn off after 25 seconds or when you turn the ignition key to ON or ACC. The inside lights will not turn off if you have turned them on manually or if a door is open.

Downloaded from www.Manualslib.com manuals search engine

Anti-Theft Alarm System (If equipped)

When armed, this system helps protect your vehicle against break-ins or theft.

When an unauthorized entry occurs, the system triggers and will:

- ❑ flash the headlamps, parking lamps, and alarm indicator lamp
- ❑ honk the horn
- ❑ disable the starting circuit to prevent the vehicle from being started

NOTE: The factory installed Remote Entry System has a PANIC feature that also chirps the vehicle horn and flashes the interior/exterior lamps when the PANIC button on the remote entry transmitter is pushed. The PANIC alarm and the Anti-Theft alarm are two separate features. Both the anti-theft alarm and the PANIC feature can be active at the same time.

Downloaded from www.Manualslib.com manuals search engine

To tell the difference between a PANIC alarm and a triggered Anti-theft alarm:

- ❑ only the Anti-Theft alarm will cause the alarm indicator lamp (located in the center of the instrument panel) to flash on and off.
- ❑ only the Anti-Theft alarm will disable the start circuit so that the vehicle can not be started.
- ❑ the Anti-Theft alarm will not stop by pushing the PANIC button on the Remote Entry transmitter.

For more information on the PANIC alarm, see *Remote Entry System* in the Index.

Downloaded from www.Manualslib.com manuals search engine

Arming the system

To arm the system, do the following steps in sequence:

1. Remove the key from the ignition.

At this point, the anti-theft system automatically monitors the ignition keylock cylinder. If the lock cylinder is forcibly removed, the anti-theft alarm system will trigger. To arm the remaining portion of the system, follow steps 2-4.

2. Open any door. The alarm indicator light will start flashing to remind you to arm the system.

3. Lock the doors by using the power door lock switch or by pressing the remote entry transmitter LOCK button.

   The alarm indicator will now glow steadily.

4. Close all doors. The alarm indicator light will then remain on steadily for approximately 30 seconds and then go out. When the light goes out, the system is armed.

NOTE: Be sure to close all doors completely. If not, the alarm indicator light will remain on. Remember, your anti-theft system is armed only after the alarm indicator light remains on steadily for approximately 30 seconds after the last door is closed, and then goes out.

Downloaded from www.Manualslib.com manuals search engine

You can also arm the anti-theft system by following this sequence:

1. Remove key from ignition.

2. Close all of the doors.

3. Press the remote entry transmitter LOCK button to lock the doors. The alarm indicator will come on for 30 seconds to show that the alarm is arming and then turn off to show that the alarm has been armed.

The anti-theft system is designed to work with the factory installed remote entry system. It may not work with other remote entry systems.

Downloaded from www.Manualslib.com manuals search engine

Disarming an untriggered anti-theft system

You can disarm the system by:

- ❑ unlocking a door with the key (turn the key all the way to the end of travel or the system may not disarm.
- ❑ using the UNLOCK button of the remote entry transmitter
- ❑ using the keyless entry unlock code on the keypad
- ❑ if remaining in the vehicle, turn the ignition switch to ON or ACC

Triggering the alarm system

The armed system will be triggered if:

- ❑ any door is opened without disarming the system first (see previous paragraphs)
- ❑ the trunk lock cylinder is removed, or

NOTE: You can open the trunk with your key without setting off the alarm.

- ❑ the ignition key lock cylinder is forcibly removed from the steering column.

Downloaded from www.Manualslib.com manuals search engine

Disarming a triggered system

The alarm can be disarmed by:

- ❑ unlocking a front door with the key
- ❑ using the UNLOCK button of the remote entry transmitter
- ❑ using the keyless entry unlock code

NOTE: The flashing lights and honking horn will shut off automatically within 2 minutes 45 seconds after the system is triggered. It will trigger again if another intrusion occurs. However, the starter circuit remains disabled until the system is disarmed.

Downloaded from www.Manualslib.com manuals search engine

Remote Entry System (If equipped)

If your vehicle has the remote entry system, you can lock and unlock the vehicle doors and open the trunk without using a key. The remote also has a personal alarm feature. The buttons for the system are located on the hand held transmitter(s) that came with your vehicle.

The system will work with up to four transmitters. Your vehicle came with two transmitters. Additional transmitters can be ordered from your dealer.

The remote entry features only operate with the ignition in the OFF position.

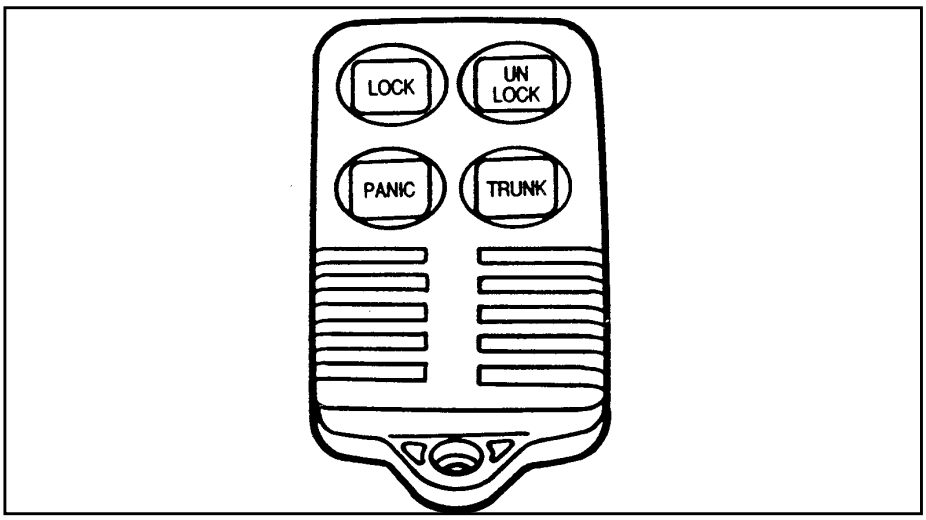

Remote entry transmitter

Downloaded from www.Manualslib.com manuals search engine

Unlocking the doors and opening the trunk

To unlock the driver's door, press the UNLOCK button.

To unlock the other doors, press the UNLOCK button a second time within five seconds of unlocking the driver's door.

To open the trunk, press the TRUNK button.

Locking the doors

To lock all the doors, press the LOCK button.

If you would like a signal that the doors are being locked, press the LOCK button again within five seconds. The doors will lock again, the horn will beep and the low beam headlamps and tail lamps will flash.

Downloaded from www.Manualslib.com manuals search engine

Activating the remote personal alarm

If you wish to activate the remote personal alarm, press the PANIC button. This will honk the horn and flash the low beam headlamps and tail lamps for approximately two minutes and forty-five seconds. You can turn it OFF by pressing the PANIC button again or by turning the ignition key to the RUN position.

When you use the remote entry UNLOCK, TRUNK or PANIC buttons, the illuminated entry system turns on the interior lights for 25 seconds. You can turn these lights off with the LOCK button or by turning the ignition to the RUN position. The interior lights will not turn off if you have turned them on manually or if a door is open.

Replacing the batteries

The remote entry transmitter is powered by two coin type three-volt lithium 2016 batteries (included) that should last for several years of normal use. If you notice a significant decrease in operating range, the batteries should be replaced. Replacement batteries can be purchased at most pharmacies, watch stores or at your Ford or Lincoln-Mercury dealer.

Downloaded from www.Manualslib.com manuals search engine

NOTE: The operating range of the remote entry system can also be affected by weather conditions (such as very cold temperatures) or structures around the vehicle (buildings, other vehicles, radio and TV towers, etc.). Typical operating range will allow you to be up to 33 feet (10 meters) away from your vehicle.

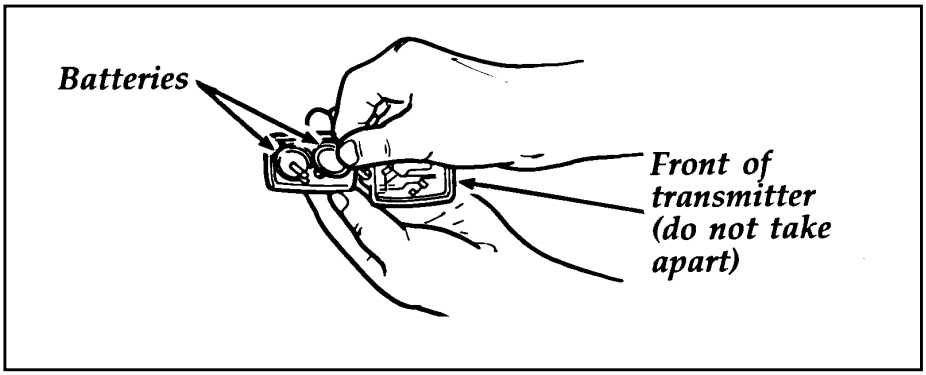

Replacing the batteries

The transmitter can be snapped apart to replace the batteries by twisting a thin coin between the two halves of the transmitter. DO NOT TAKE THE FRONT PART OF THE TRANSMITTER APART. When installing the new batteries, be sure to place the positive (+) side down as marked. Snap the two halves back together.

Replacement/additional transmitters

In the event a transmitter is lost, return the remaining transmitters to your dealer for reprogramming of your remote entry system. This is necessary to prevent further unauthorized use of the lost transmitter.

Additional transmitters may be purchased from

Downloaded from www.Manualslib.com manuals search engine

THIS DEVICE COMPLIES WITH PART 15 OF THE FCC RULES. OPERATION IS SUBJECT TO THE FOLLOWING TWO CONDITIONS: (1) THIS DEVICE MAY NOT CAUSE HARMFUL INTERFERENCE, AND (2) THIS DEVICE MUST ACCEPT ANY INTERFERENCE RECEIVED, INCLUDING INTERFERENCE THAT MAY CAUSE UNDESIRED OPERATION.

Windows

Using the Power Windows

Each door has a power control that opens and closes the window on that door. The driver's door has a master control panel that operates the windows.

Power windows can only be opened or closed when the ignition switch is in the ON or ACC position.

⚠WARNING
Do not let children play with the power windows. They may seriously hurt themselves. Make sure occupants are clear of the window(s) before closing.

Downloaded from www.Manualslib.com manuals search engine

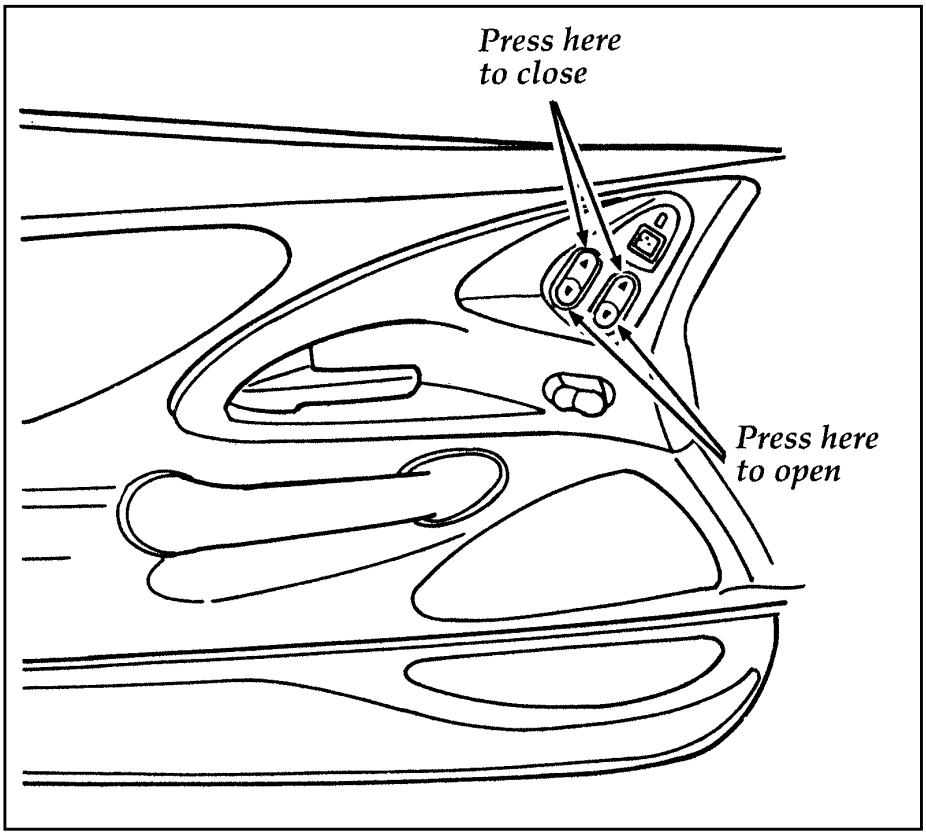

The master controls on the driver's door

Moon Roof (If equipped)

You can move the moon roof back to open the glass panel, or you can tilt it up to ventilate the vehicle. There is also an intermediate position between closed and open which can reduce wind noise at speeds between 30 and 45 miles per hour (50 and 70 km/h).

The rocker type switch is used to open and close the moon roof. You must press and hold the switch until the desired position is reached. At fully open, closed and intermediate positions, the motor will automatically turn off. Release the switch at this time to avoid motor damage.

Downloaded from www.Manualslib.com manuals search engine

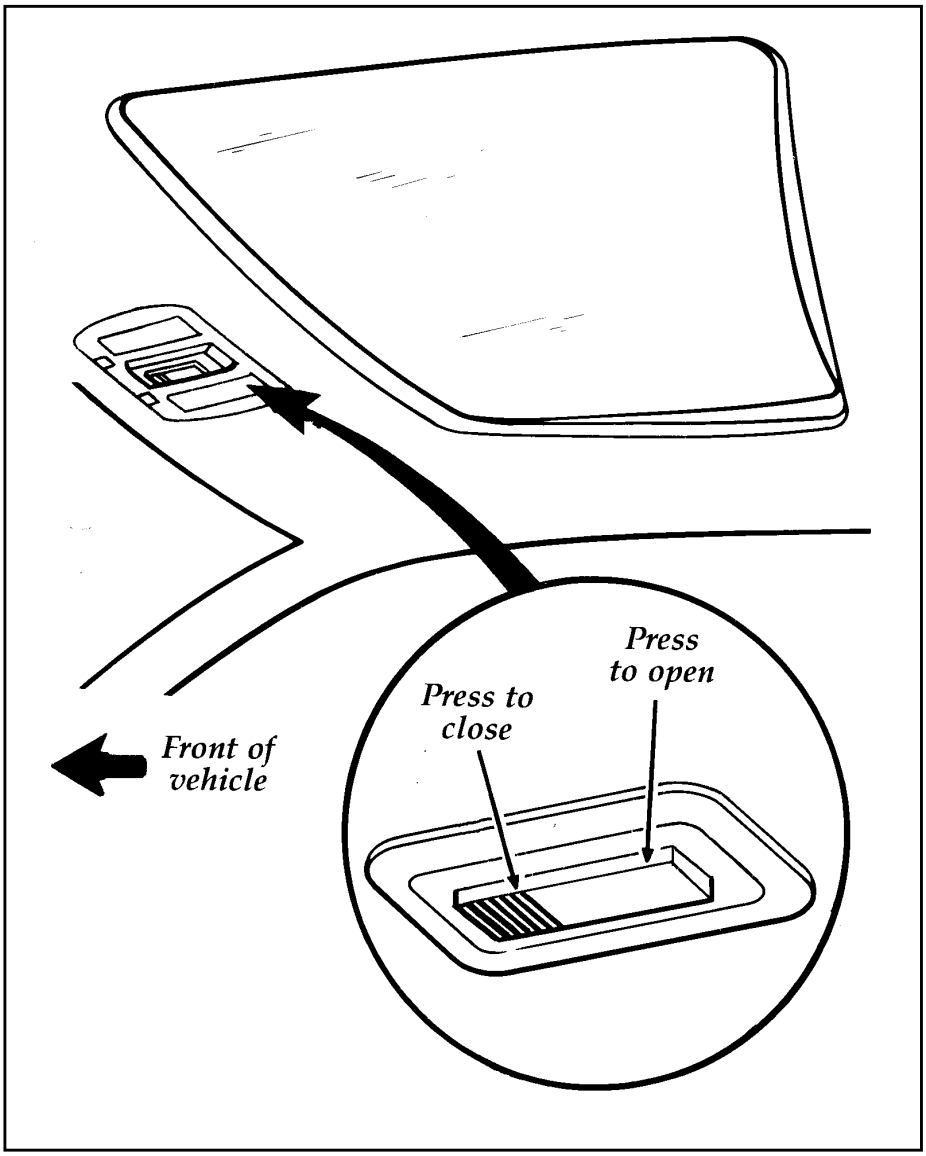

The switch for the moon roof

To open the moon roof, press and hold the rear portion of the switch. The glass panel will move to the intermediate position and stop. If the rear of the switch is pressed again the glass panel will move to the full open position and stop.

To close the moon roof, press and hold the front portion of the switch. The glass panel will move to the intermediate position and stop. Press and

Downloaded from www.Manualslib.com manuals search engine

To tilt the moon roof into vent position when the glass panel is closed, press the front portion of the switch.

To close from vent position, press and hold the rear portion of the switch.

Occasionally wiping the outside guide rail covers of the moon roof with a clean cloth will help keep the moon roof working properly.

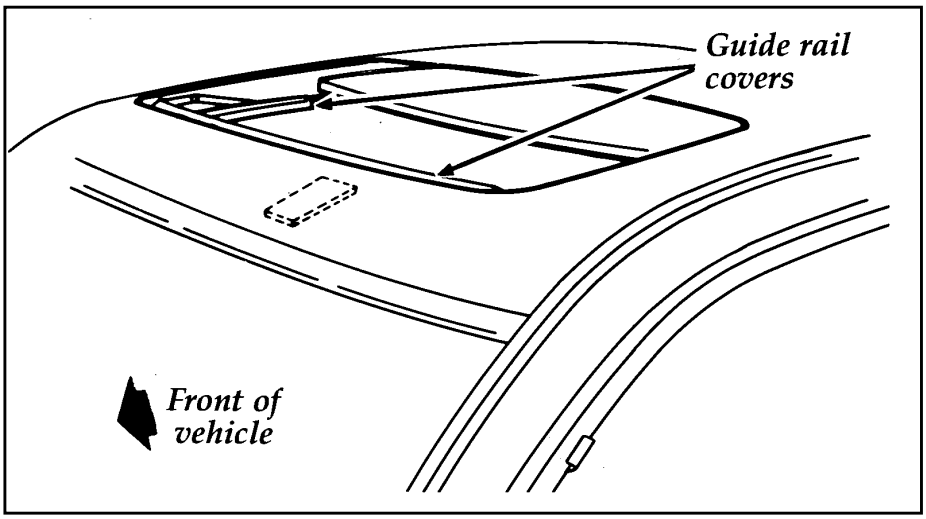

The moon roof

⚠WARNING
Do not let children play with the moon roof. They may seriously hurt themselves.

Sliding Shade

The moon roof has a sliding shade that you can manually open or close to block the sun when the glass panel is shut.

To close the sliding shade, pull the shade toward the front of the vehicle. The shade automatically

Downloaded from www.Manualslib.com manuals search engine

Seats

Head Restraints

If you use them properly, head restraints will help protect your head and neck in a collision.

A head restraint helps protect you best if you position it behind your head and not behind your neck.

Standard head restraints

You can adjust the head restraints for your comfort and protection.

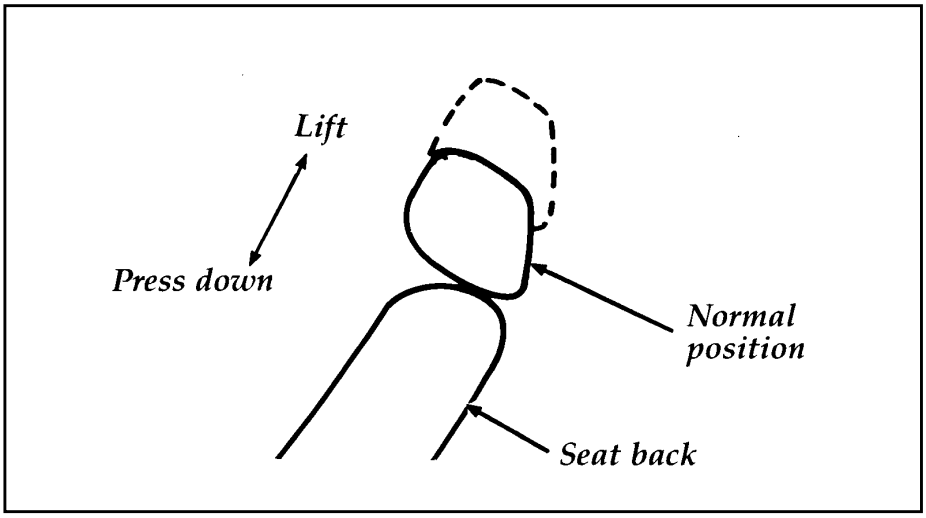

Adjusting the head restraint

Adjusting Manual Seats

In the front seats, you can move the whole seat forward or backward or tilt the back of the seat forward or backward.

To move the seats forward or backward:

1. Find the adjustment bar underneath the front

Downloaded from www.Manualslib.com manuals search engine

4. Release the bar to latch the seat in its new position. Make sure the seat locks securely in place.

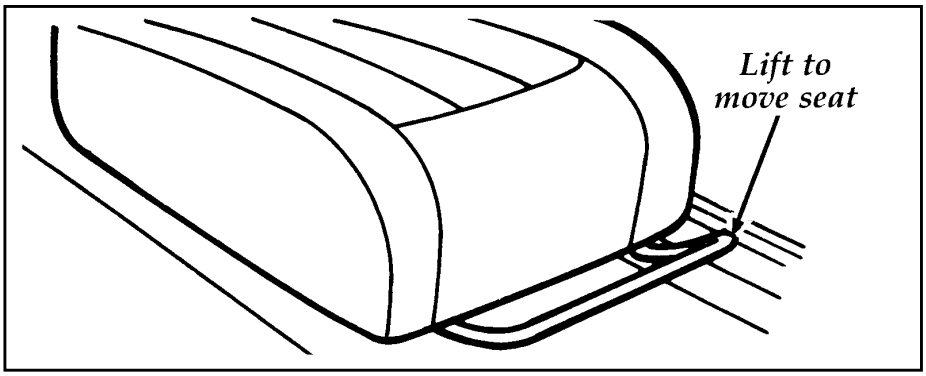

The front seat adjustment bar

To recline the front manual seats:

1. On the side of the seat, find the handle for the recliner.

2. Lift the handle up and hold it in place.

3. Lean against the back of the seat and adjust it to the position you want. You can tilt the seat back or bring it forward.

4. Release the handle to lock the seat in its new position.

⚠WARNING
Never adjust the driver's seat or seatback when the vehicle is moving.

⚠WARNING
To reduce the risk of serious injury in a collision, always drive and ride with your seatback upright and the lap belt snug

Downloaded from www.Manualslib.com manuals search engine

Seatback Recline

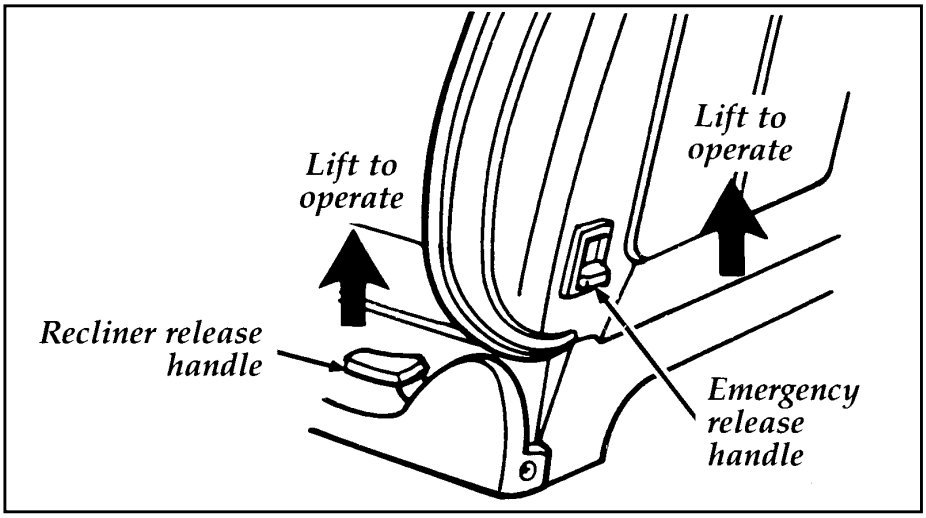

Front seatback release levers

It is not necessary to use the emergency seatback release lever for rear seat entry or exit. The seatback remains unlocked with normal usage and locks only during emergency stopping, upon impact, or on steep downhill grades. The inertia seatback latch will allow the seatback to rotate approximately 5˚ forward before it locks. The release is provided only to unlock the seatback when parked on steep downhill grades or after a collision.

⚠WARNING

A seatback which is folded forward even a small degree may not lock properly in the event of a sudden stop or collision.

Downloaded from www.Manualslib.com manuals search engine

Using the Power Seats (If equipped)

If your vehicle has power seats, you can adjust them in several directions. The controls are on the side of the seats.

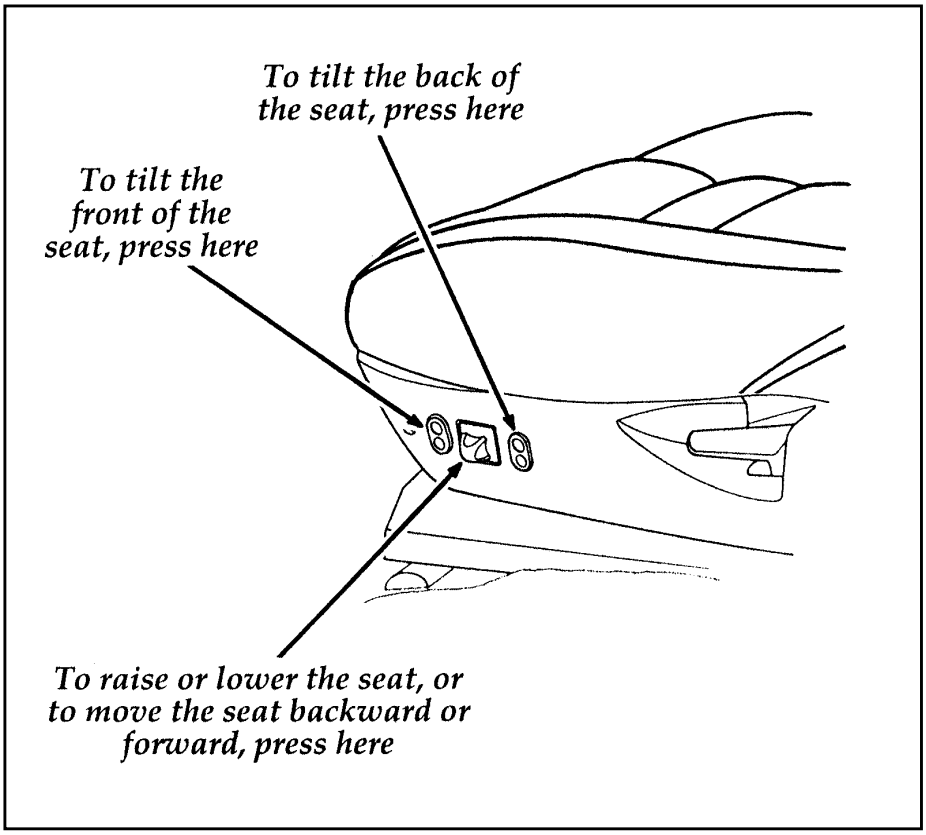

The power controls on the driver's seat

⚠WARNING

Do not pile cargo higher than the seatbacks to avoid injuring people in a collision or sudden stop.

Downloaded from www.Manualslib.com manuals search engine

Sport Seat

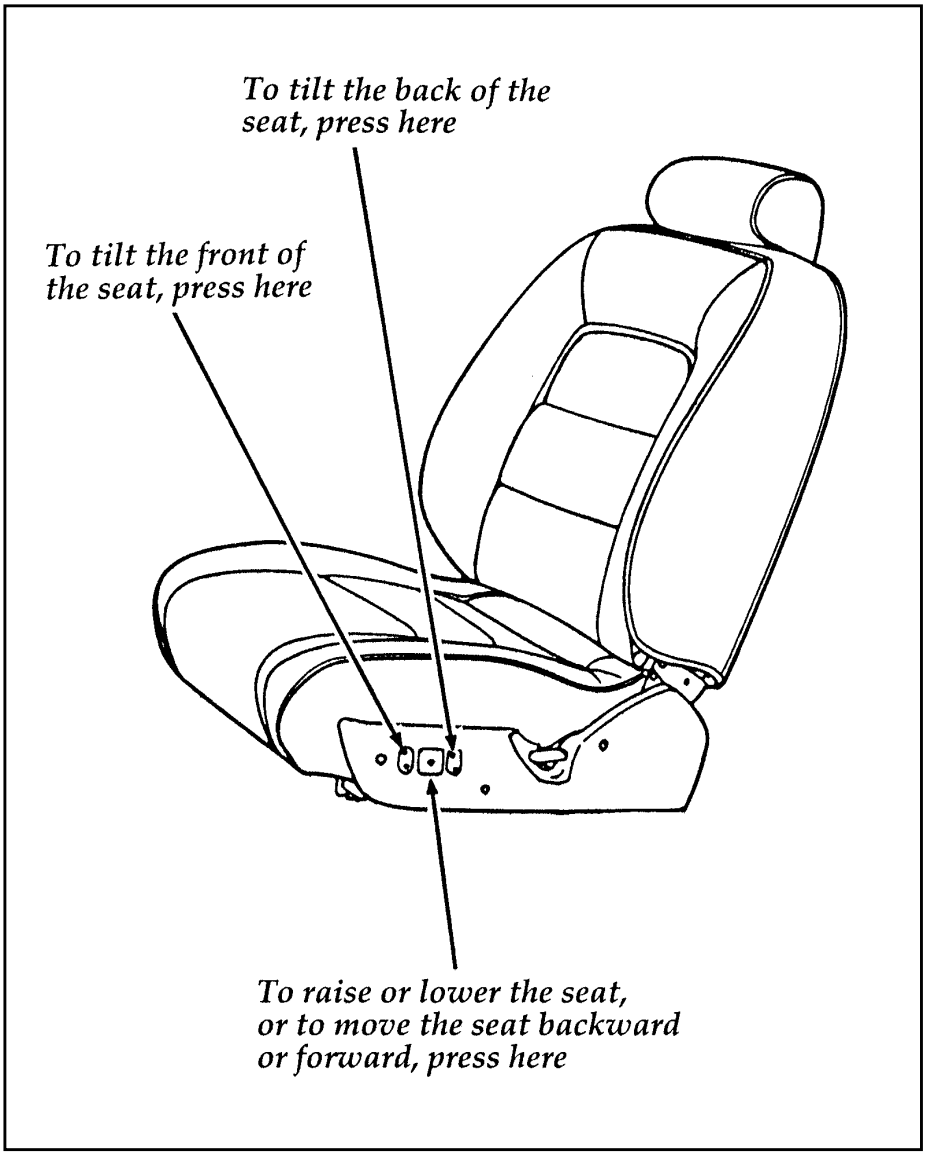

Sport seat controls

Downloaded from www.Manualslib.com manuals search engine

Rear Seat Entry

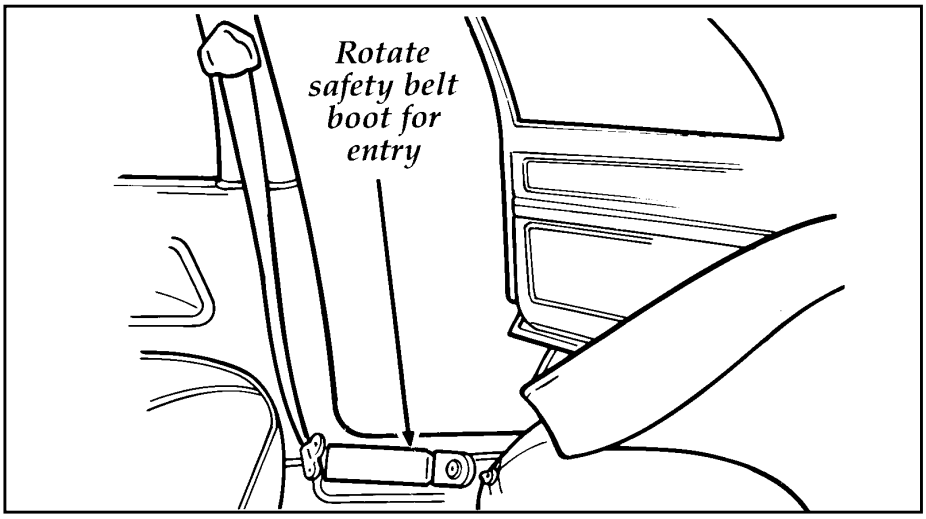

Entering the rear seat

The rotating boot on the lap belt is designed to allow rear seat entry/exit. To enter the rear seat:

1. Rotate the safety belt boot rearward.
2. Enter the rear seat in front of the safety belt.
3. Rotate the safety belt boot forward to allow use by the front seat passengers.

Cleaning the Seats

Leather and vinyl

For routine cleaning, wipe the surface with a soft, damp cloth. For more thorough cleaning, wipe the surface with a leather and vinyl cleaner or a mild soap.

Fabric

Remove dust and loose dirt with a whisk broom or a vacuum cleaner. Remove fresh spots immediately. Follow the directions that come with the cleaner.

Downloaded from www.Manualslib.com manuals search engine

Mirrors

You can adjust your rearview mirror in any direction. The special swivel bracket lets you move the mirror up or down and from side to side.

⚠WARNING
Make sure you can see clearly through the rearview mirror at all times. Do not block your vision. If you cannot see through the mirror, it could result in a collision, injuring yourself and others.

Adjusting the Dual Electric Remote Control Mirrors

The switch for controlling the dual electric remote control mirrors is located on the driver's door.

Do not clean the housing or glass of any mirror with harsh abrasives, fuel or other petroleum-based cleaning products.

Downloaded from www.Manualslib.com manuals search engine

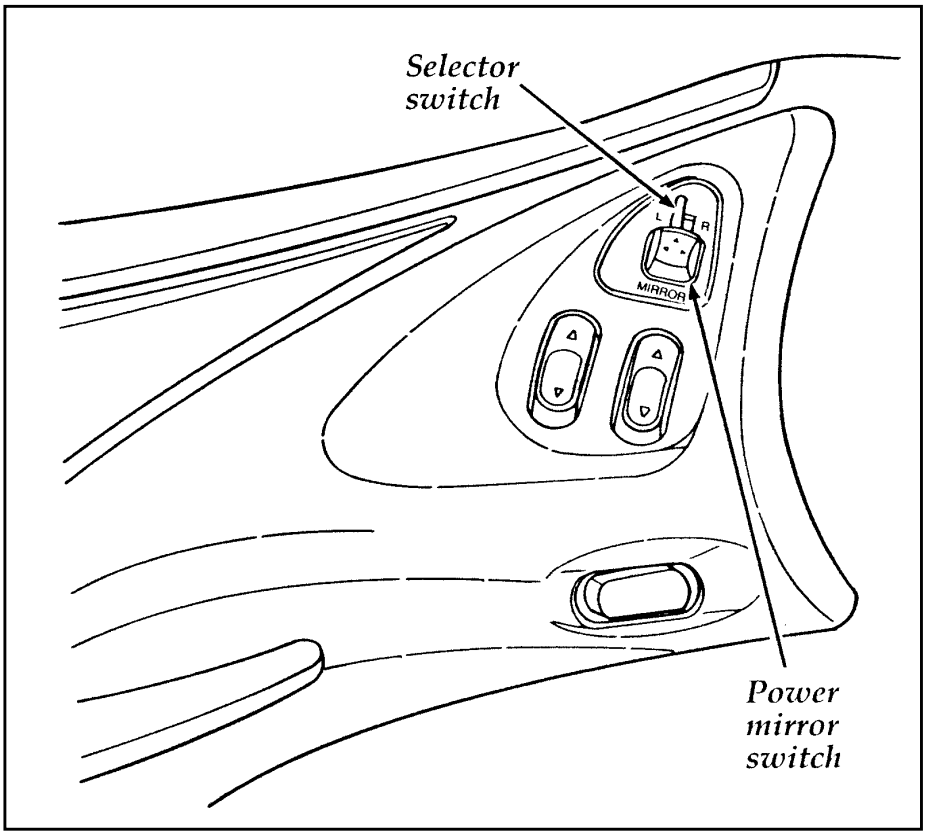

The mirror controls on the driver's door

To adjust the side mirrors:

1. Find the control switch in the driver's door panel.

2. Select the right or left mirror by moving the selector switch to R or L.

3. Move the knob in the direction of the arrows for the direction you want to move the mirror.

4. Return the selector switch to the middle position to keep the mirror in place.

Downloaded from www.Manualslib.com manuals search engine

The Right Side Convex Mirror

The side view mirror on the right is a convex mirror. This mirror gives you a wider view of the lanes on your right and behind you.

⚠WARNING
The side view mirror on the right makes objects appear smaller and farther away than they actually are.

Sun Visors

Turning on the Mirror Light on the Sun Visors (If equipped)

To turn on the visor mirror light, lift the mirror cover.

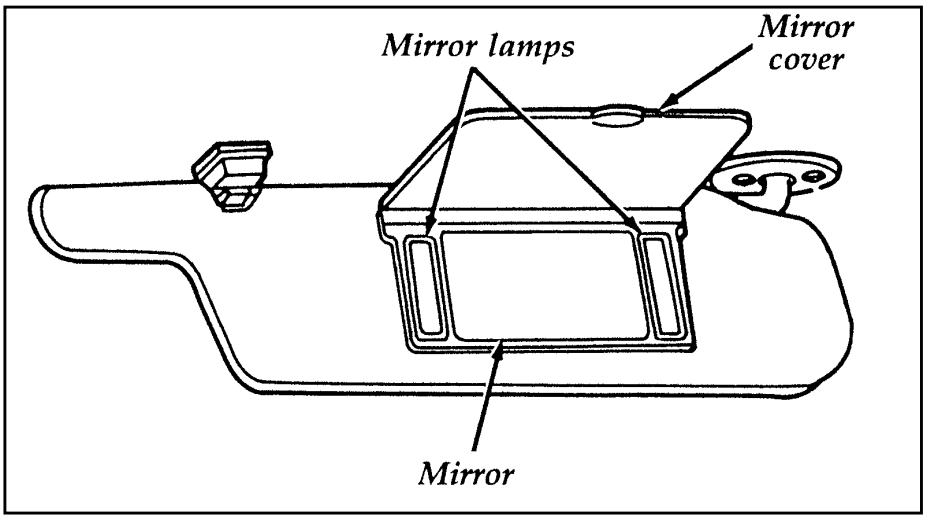

The mirror on the sun visor

Downloaded from www.Manualslib.com manuals search engine

Console

Your vehicle has a full console. The full console has the features shown in the illustration below.

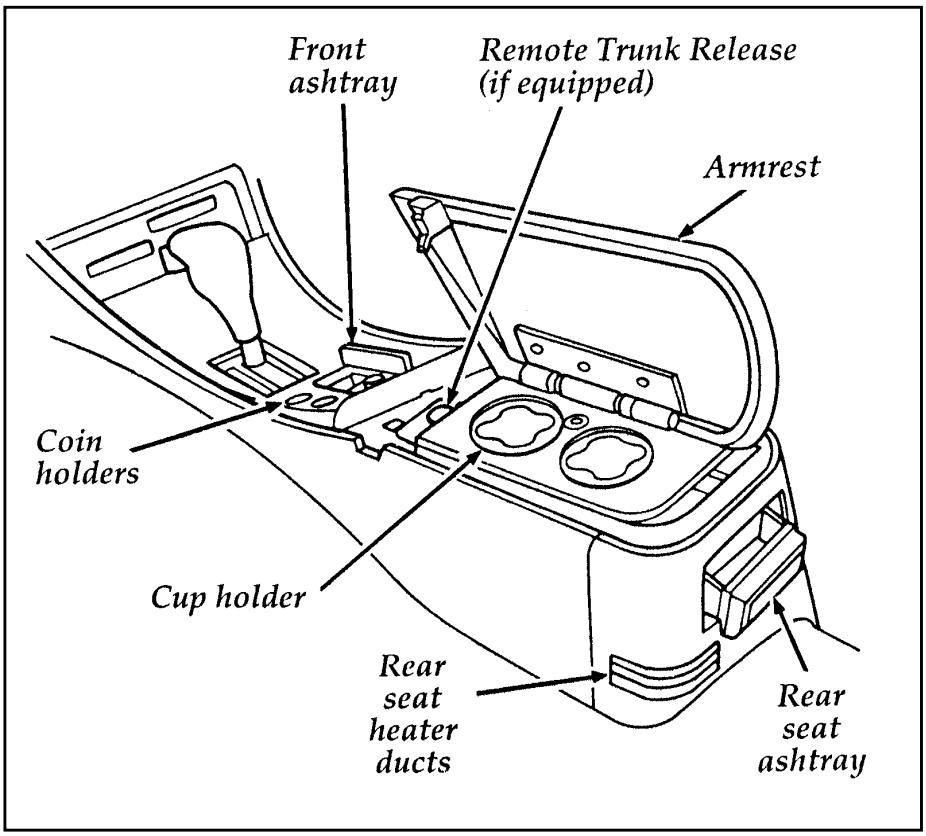

The features on the full console

Storage Compartments

In addition to the console, your vehicle may have several small storage compartments:

- ❑ a glove compartment that locks. Use the round key to lock and unlock it.
- ❑ two map pockets on the panels of the front doors.

Downloaded from www.Manualslib.com manuals search engine

⚠ **WARNING**

Trunk

Opening the Trunk Manually

The trunk in your vehicle gives you plenty of room for storage — 15.1 cubic feet (.42 cubic meters).

To open and close the trunk from the outside:

1. Insert the key into the lock on the trunk.
2. Turn the key to the right until the trunk opens.
3. Remove the key before you close and lock the lid.
4. Shut the trunk lid completely.

Using the Remote Control for the Trunk (If equipped)

With the ignition switch in the ON or ACC position, you can use the remote control under your console armrest to unlock and open the trunk.

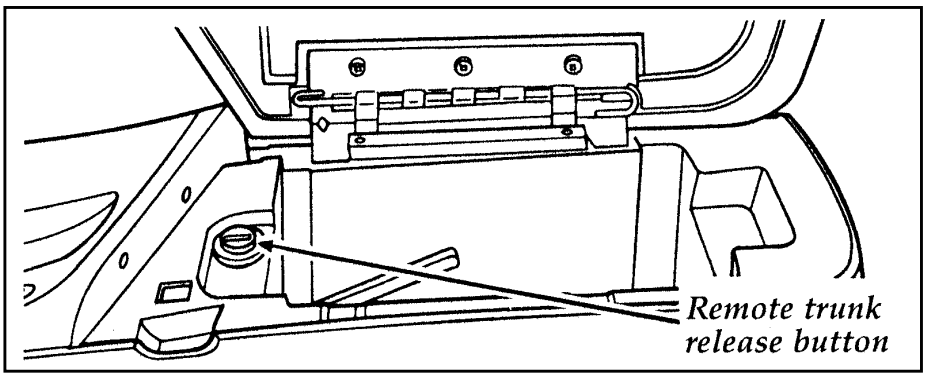

The trunk release button located under the armrest

Downloaded from www.Manualslib.com manuals search engine

Positive Location Floor Mat

When installing or removing the driver's side floor mat you must attach/detach the positive location grommet from the hook on the floor. The hook is just forward of the left hand track of the driver's seat.

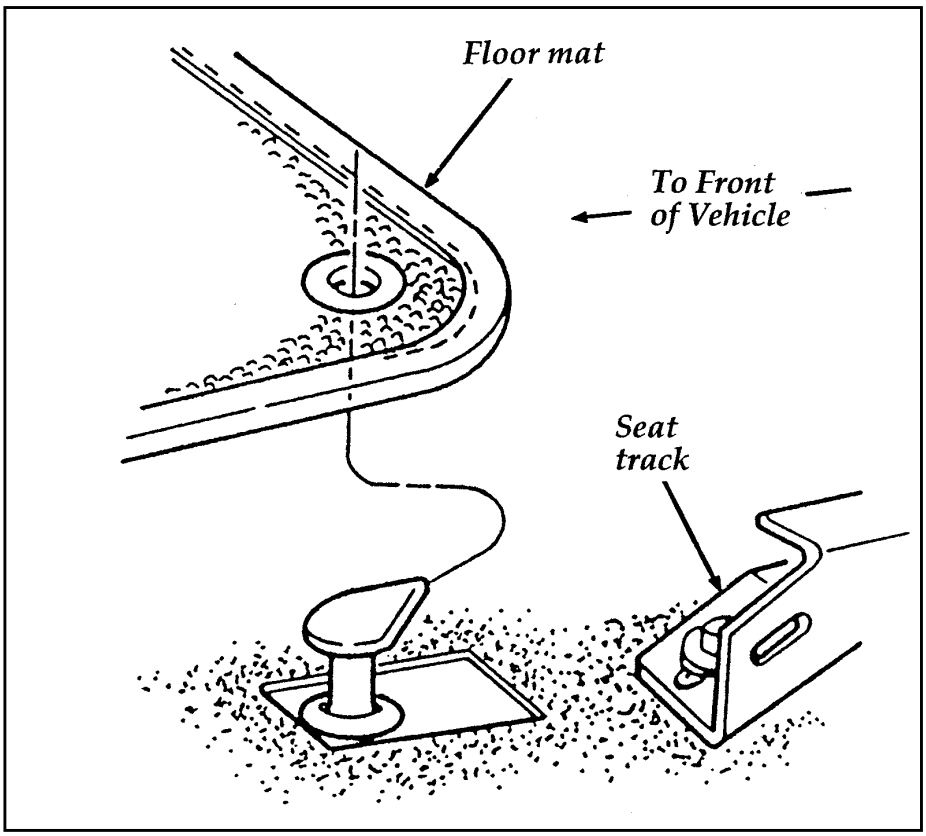

The positive location floor mat hook

Downloaded from www.Manualslib.com manuals search engine

Decklid Luggage Rack (If equipped)

NOTE: The factory-installed luggage rack has a load carrying capacity of 50 lbs. (23 kg.). Do not exceed this load limit or cause the vehicle to exceed the gross vehicle weight rating (GVWR), which is shown on the Safety Compliance Certification Label.

Downloaded from www.Manualslib.com manuals search engine

Electronic Sound Systems

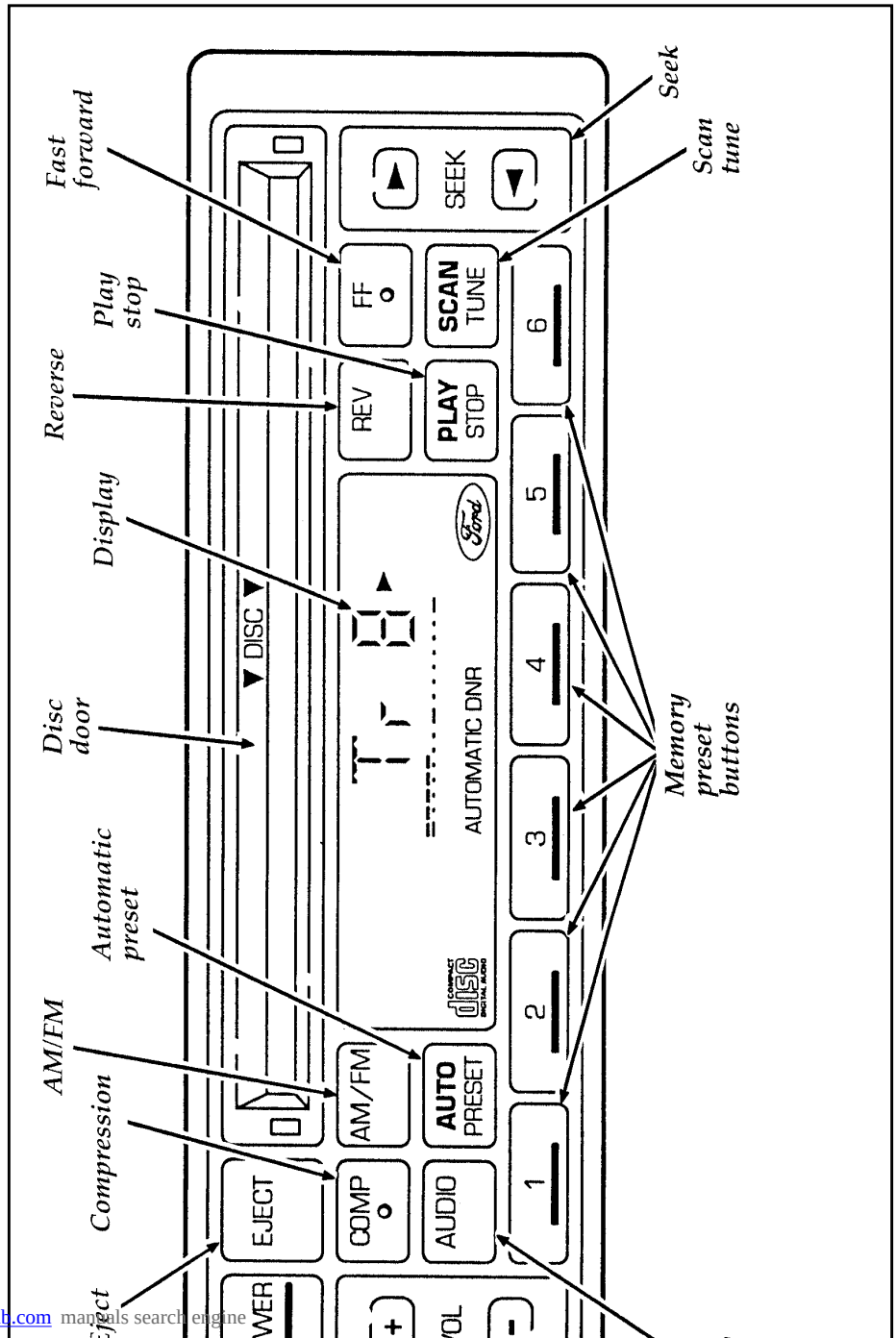

Downloaded from www.Manualslib.com manuals search engine

Compact Disc Radio

The Compact Disc Radio combines the Electronic Stereo Radio with the Ford Compact Disc Player.

Using the Controls on Your New Compact Disc Radio

Most of the features of this unit work for both radio and CD operation. Also, some of the knobs and buttons control several different functions, so be sure to read all of the operating instructions carefully.

How to turn the radio on and off

Press the “POWER” button to turn the radio on. Press it again to turn it off.

How to adjust the volume

Press the (+/−) side of the “VOL” button to increase/decrease the volume. Bars illuminate in the display to show the relative volume level.

NOTE: If the volume level is set above a certain listening level when the ignition switch is turned off, when the ignition switch is turned back on, the volume will come back to a “nominal” listening level. However, if the radio power is turned off (with the “POWER” button), the volume will remain in the position it was set at when radio power is switched back on.

Selecting the AM or FM frequency band

Push the “AM/FM” button to select the desired

Downloaded from www.Manualslib.com manuals search engine

How to tune radio stations

There are four ways for you to tune in a particular station. You can manually locate the station using the "SCAN/TUNE" button, "SEEK" the station, "SCAN" to the station or select the station by using the memory buttons, which you can set to any desired frequency. These four methods are described below.

❑ Using the "SCAN/TUNE" button to manually tune

You can change the frequency up or down one increment at a time (FM changes in increments of 200kHz; AM changes in increments of 10kHz) by first pressing the "SCAN/TUNE" button twice (display shows "TUNE"), then — **within approximately five seconds** —pressing and releasing either the top ▶ or bottom ◀ half of the "SEEK" button. To change frequencies quickly, press and **hold down** either the top or bottom half of the "SEEK" button. While you are manually tuning, the display will show a blinking "M".

Manual tuning adjusts your radio to any allowable broadcast frequency, whether or not a station is present on that frequency. (See *All About Radio Frequencies* in this section.)

❑ Using the "SEEK" function

This feature on your radio allows you to automatically select listenable stations up or down the frequency band. Press the top ▶ half of the "SEEK" button to select the next listenable station up the frequency band.

Downloaded from www.Manualslib.com manuals search engine

❑ Using the “SCAN/TUNE” button to scan radio stations

Pressing the “SCAN/TUNE” button once enters the scan mode (display will indicate “SCN”). Pushing the top ▶ half of the “SEEK” button will begin the scan mode up the frequency band, stopping on each listenable station for approximately five seconds. Pushing the bottom ◀ half of the “SEEK” button will begin the scan mode down the frequency band, again stopping on each listenable station for approximately five seconds.

To stop the scan mode on the presently sampled station press the “SCAN/TUNE” button again.

❑ Setting the Station Memory Preset buttons

Your radio is equipped with 6 station memory buttons. These buttons can be used to select up to 6 preset AM stations and 12 FM stations (6 in FM1 and 6 in FM2).

Follow the easy steps below to set these buttons to the desired frequencies:

1. Select a band, then select a frequency.

2. Press one of the memory buttons and hold the button until the sound returns. That station is now held in memory on that button.

3. Follow the two steps above for each station memory preset button you want to set.

Downloaded from www.Manualslib.com manuals search engine

❑ Using the Automatic Memory Load feature

If no stations are in memory preset, you can activate the **Auto Memory Load** feature by pressing and holding the “AUTO PRESET” button **for approximately three seconds**. Auto Memory Load sets all memory buttons in AM, FM1 and FM2 sequentially by seeking out the first six strong stations for the respective band and storing them in memory buttons 1-5. (FM2 will store the second set of strong stations from the FM band.)

With Auto Memory Store, you can continually set strong stations into your memory buttons without losing your existing memory presets, which is especially handy while traveling. Your radio will automatically set your memory buttons to the strong local stations so you don’t have to continually manually tune to existing stations.

Activate Auto Memory Store by pushing the “AUTO PRESET” button once. Your radio will set the first five strong stations of the band you are in (AM, FM1 or FM2) into the memory buttons. The display will show “AUTO”, then run through the frequencies, stopping momentarily on the stations being set into the memory buttons. The radio is now in the “AUTO” mode and this display will show “AUTO” each time a preset is activated.

NOTE: If there are fewer than five strong stations in the frequency band, the remaining unfilled buttons will store

Downloaded from www.Manualslib.com manuals search engine

After all stations have been filled, the radio will begin playing the station stored on memory button 1.

To deactivate the Auto Memory Store mode and return to the manually-set memory button stations (or those stations set using Auto Memory Load), simply push the “AUTO PRESET” button. Display will show “AUTO” then “OFF”. The next time Auto Memory Store is activated on that band, the radio will store the next set of five strong stations.

Adjusting the tone balance and speaker output of your radio

❑ Increasing or decreasing bass response

Push the “AUDIO” button repeatedly until the display reads “BASS”. Push the top (+) side of the “VOLUME” button to increase bass (more “lows”), and push the bottom (–) side to decrease bass (less “lows”).

❑ Increasing or decreasing treble response

Push the “AUDIO” button repeatedly until the display reads “TREB”. Push the top (+) side of the “VOLUME” button to increase treble (more “highs”), and push the bottom (–) side to decrease treble (less “highs”).

❑ Adjusting speaker balance

Balance control allows you to adjust the sound distribution between the right and left speakers. Push the “AUDIO” button

Downloaded from www.Manualslib.com manuals search engine

❑ Adjusting speaker fader

Fade control allows you to adjust the sound distribution between the front and rear speakers. Push the “AUDIO” button repeatedly until the display reads “FADE”. Push the top (+) side of the “VOLUME” button to shift the sound to the front speakers, and push the bottom (–) side to shift the sound to the rear speakers.

NOTE: Illuminated bars in the display show relative levels of bass and treble, and positions of speaker balance and fader functions (left to right, front to rear).

Using the Controls on Your New Compact Disc Player

Your new Ford Compact Disc Player is capable of playing 12 cm *or* 8 cm discs, without an adapter! The Player operates when the power is on and a disc is inserted (**label side up**). Handle the disc by its edge only. (Be sure to read and follow all of the care and cleaning instructions under *How To Take Care of and Clean Your CD Player and Discs.*

NOTE: If after you insert a disc, the disc is ejected and “ERROR” begins scrolling in the display, remove the disc and reinsert it right side up (label side up).

The digital display on your CD player will either show the track (selection) number or the elapsed time. (The display mode can be selected by pressing the memory preset button #6.) Indicators for play ◀, stop ■ and compression

Downloaded from www.Manualslib.com manuals search engine

NOTE: The volume, bass, treble, balance and fader controls on the radio are also used with the CD player. Refer to earlier operating instructions on these controls.

How to insert a disc and begin play

Insert one disc, **label side up** into the disc opening. When inserted, the disc automatically loads into the unit and play starts at the beginning of the first track (selection).

When the disc reaches the end, the disc player automatically returns to the beginning of the disc and resumes playing.

How to change the track being played

Press the top ▶ side of the "SEEK" button to seek forward to the next track of the disc. If the button is held and the last track is reached, the disc player will automatically begin playing the last track of the disc.

Press the bottom ◀ side of the "SEEK" button to seek the previous track on the disc.

NOTE: Once a disc is inserted, the disc opening is secured to prevent the accidental insertion of a second disc.

NOTE: The CD player has heat protection circuitry to protect the laser diode. If the temperature of the player reaches 167˚F (75˚C), the heat detection circuit will shut off the player and "TOO HOT" will scroll in the display for

Downloaded from www.Manualslib.com manuals search engine

How to stop and restart the CD player

When a disc is loaded, the unit automatically enters the play mode and the play indicator ▶ illuminates. To stop temporarily, press the "PLAY/STOP" button or the "AM/FM" button. The stop indicator ■ in the display illuminates and operation returns to the radio mode. To resume CD play, press the "PLAY/STOP" button once again.

NOTE: If the ignition key is turned OFF during play and then is set to the ON or ACCESSORY position, the CD player will resume playing in the mode it was in when ignition was turned off.

How to fast forward or reverse your CD player

To quickly search for a particular point in a selection, press the "FF" button (to fast forward) or the "REV" button (to reverse). While either button is pressed, the disc goes forward or backward at two different speeds depending on how long the button is held down. (Pressing either button for more than approximately three seconds will speed up the process.) Release the button at the desired point (found by watching the elapsed playing time in the display or by listening to the sound during fast forward or reverse). When you have reached the beginning of track 1, the CD player will begin playing.

When you have reached the end of the disc by keeping the fast forward button pressed, the display will show "END" and the player will go

Downloaded from www.Manualslib.com manuals search engine

Using the "SCAN" function

Press the "SCAN/TUNE" button to enter the scan mode. Once in the scan mode, press the top ▶ or bottom ◀ half of the "SEEK" button to scan forward or reverse, respectively. The CD player will begin scanning the disc, stopping on each listenable track for approximately eight seconds. This continues until you press the "SCAN/TUNE" button a second time. While in the scan mode, the display shows the current sampled track number.

Special features of your CD player

❑ Compression

The compression feature will bring soft and loud passages closer together for a more consistent listening level.

To turn the compression on, press the "COMP" button. When on, the compression indicator ("C") will appear in the display. Press the button again to turn off.

❑ Automatic Disc Storage

If the disc is ejected from the CD player but is not removed from the disc opening within approximately 10 seconds, the player will automatically reload the disc for storage, unless the disc is automatically ejected due to a "focus error" (disc inserted upside down). In this case, the disc will not be automatically reloaded.

How to eject the disc

Downloaded from www.Manualslib.com manuals search engine

Push the "EJECT" button to stop play, eject the

Downloaded from www.Manualslib.com manuals search engine

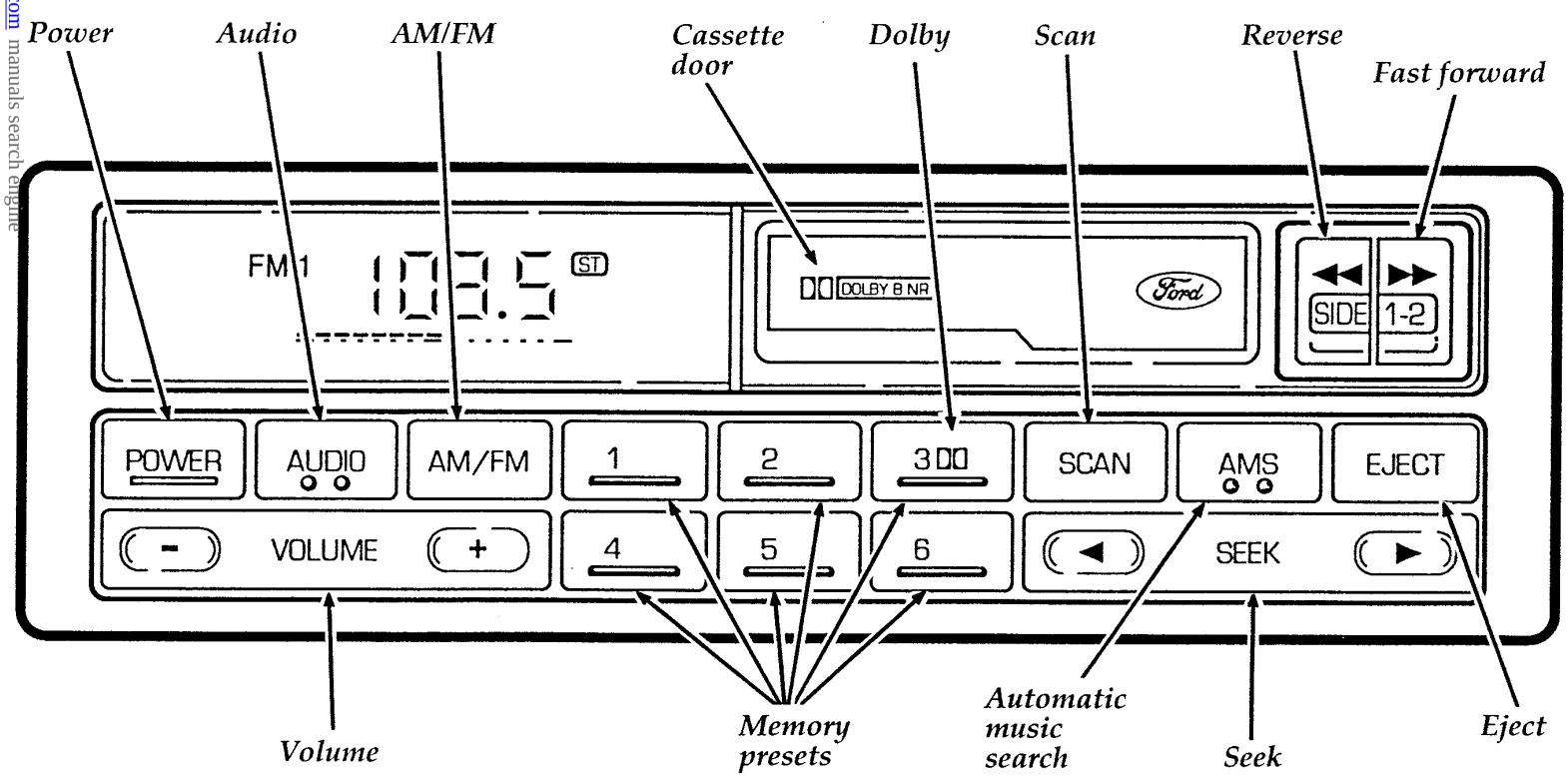

Electronic Stereo Cassette Radio

Using the Controls on Your New Radio

How to turn the radio on and adjust the volume

Press the “POWER” button to turn the radio on. Press it again to turn it off.

Press the right (+) side of the “VOLUME” button to increase the volume. Press the left (–) side of the button to decrease the volume. Illuminated bars in the display show the relative volume level.

NOTE: If the volume level is set above a certain listening level when the ignition switch is turned off, when the ignition switch is turned back on, the volume will come back to a “nominal” listening level. However, if the radio power is turned off (with the “POWER” button), the volume will remain in the position it was set at when radio power is switched back on.

Selecting the AM or FM frequency band

Push the “AM/FM” button to select the desired frequency band or to stop/store cassette tape (when in cassette mode). Pushing the button more than once will alternate between AM, FM1 and FM2. These functions are used with the station memory buttons described under *How to tune radio stations.*

How to tune radio stations

There are four ways for you to tune in to a particular station. You can manually locate the

Downloaded from www.Manualslib.com manuals search engine

❑ Using the “AMS” function to manually tune your radio

You can change the frequency up or down one increment at a time by first pressing the “AMS” button, (display shows “TUNE”) then pressing and releasing either the right ▶ or left ◀ side of the “SEEK” button. To change frequencies quickly, press and **hold down** either the right or left side of the “SEEK” button.

Manual tuning adjusts your radio to any allowable broadcast frequency, whether or not a station is present on that frequency. (See *All About Radio Frequencies* in this section.)

❑ Using the “SEEK” function

This feature on your radio allows you to automatically select listenable stations up or down the frequency band. Press the right (▶) side of the “SEEK” button to select the next listenable station up the frequency band. Press the left (◀) side of the button to select the next listenable station down the frequency band. By holding the button down, listenable stations can be passed over to reach the desired station.

❑ Using the “SCAN” function

Press the “SCAN” button to enter the scan mode. The radio will begin scanning up the frequency band, stopping on each listenable station for approximately a five-second sampling. This continues until you press the

Downloaded from www.Manualslib.com manuals search engine

❑ Setting the Station Memory Preset buttons

Your radio is equipped with 6 station memory buttons. These buttons can be used to select up to 6 preset AM stations and 12 FM stations (6 in FM1 and 6 in FM2).

Follow the easy steps below to set these buttons to the desired frequencies:

1. Select a band, then select a frequency.
2. Press one of the memory buttons and hold the button until the sound returns. That station is now held in memory on that button.
3. Follow the two steps above for each station memory preset button you want to set.

NOTE: If the vehicle's battery is disconnected, the station memory preset buttons will need to be reset.

Adjusting the tone balance and speaker output of your radio

❑ Increasing or decreasing bass response

Push the "AUDIO" button repeatedly until the display reads "BASS." Push the right (+) side of the "VOLUME" button to increase bass (more "lows"), and push the left (−) side to decrease bass (less "lows").

❑ Increasing or decreasing treble response

Push the "AUDIO" button repeatedly until the display reads "TREB." Push the right (+)

Downloaded from www.Manualslib.com manuals search engine

Speaker features and operation

❑ Adjusting speaker balance

Balance control allows you to adjust the sound distribution between the right and left speakers. Push the “AUDIO” button repeatedly until the display reads “BAL.” Push the right (+) side of the “VOLUME” button to shift the sound to the right speakers, and push the left (−) side to shift the sound to the left speakers.

❑ Adjusting speaker fader

Fade control allows you to adjust the sound distribution between the front and rear speakers. Push the “AUDIO” button repeatedly until the display reads “FADE.” Push the right (+) side of the “VOLUME” button to shift the sound to the front speakers, and push the left (−) side to shift the sound to the rear speakers.

NOTE: Illuminated bars in the display show relative levels of bass and treble, and positions of speaker balance and fader functions (left to right, front to rear).

Using the Controls of Your Cassette Tape Player

How to insert a tape

Insert a cassette (with the open edge to the right) firmly into the tape door opening, making sure the cassette is completely in and “seated.”

How to locate a desired track on the tape

NOTE: The tape track number indicated in the

Downloaded from www.Manualslib.com manuals search engine

NOTE: Depending on your vehicle, the display of your radio may show arrows (▶▶ or ◀◀) or numerals ("1" or "2") to indicate the direction of tape travel. In either case, at the end of the tape, the direction automatically reverses and plays the other side of the tape.

❑ Using the Automatic Music Search ("AMS")(If your display shows numerals)

Press and hold the "AMS" button ("AMS" will appear in the display). Then, push the left (◀◀) button to rewind to the beginning of the current selection or press the right (▶▶) button to fast forward to the beginning of the next selection.

❑ Fast forwarding the tape (if your display shows numerals)

Push the right (▶▶) button to fast forward the tape.

❑ Rewinding the tape (if your diplay shows numerals)

Push the left (◀◀) button to rewind the tape.

❑ Using the Automatic Music Search ("AMS") (if your display shows arrows)

Press and hold the "AMS" button. Then, push the appropriate fast-wind button, depending upon the direction of the tape travel arrow in the display. For example, if the tape travel arrow is pointing to the left,

Downloaded from www.Manualslib.com manuals search engine

- Fast forwarding the tape (if your display shows arrows)

  To fast forward the tape, press the fast-wind button with the arrows pointing in the same direction as indicated in the display. For example, if the tape travel arrow in the display is pointing to the left, press the left (◀◀) button to fast forward the tape. To return to the play mode, press the opposite fast-wind button momentarily, until fast forward stops.

- Rewinding the tape (if your display shows arrows)

  To rewind the tape, press the fast-wind button with the arrows pointing in the opposite direction as indicated in the display. For example, if the tape travel arrow in the display is pointing to the left, press the right (▶▶) button to rewind the tape. To return to the play mode, press the opposite fast-wind button momentarily, until rewind stops.

- How to change the side of the tape being played

  The alternate track (other side) of the tape can be selected at any time by pushing both fast-wind buttons (◀◀ and ▶▶) at the same time.

Downloaded from www.Manualslib.com manuals search engine

How to eject the tape

To stop the tape and eject the cassette, press the "EJECT" button. The radio will resume playing.

Using the Dolby® B noise reduction feature

NOTE: Noise reduction system manufactured under license from Dolby Labs Licensing Corporation. "Dolby" and double-D symbol are trademarks of Dolby Laboratories Licensing Corporation.

Push the DD button to activate. Push again to deactivate.

Tips on Caring for the Cassette Player and Tapes

In order to keep your cassette tape player performing the way it was meant to, read and follow these simple precautions:

- Using a Ford Cassette Cleaning Cartridge to clean the tape player head after 10-12 hours of play will help maintain the best playback sound and proper tape operation.

- Only cassettes that are 90 minutes long or less should be used. Tapes longer than 90 minutes are thinner and subject to breakage or may jam the tape player mechanism.

Downloaded from www.Manualslib.com manuals search engine

- Protect cassettes from exposure to direct sunlight, high humidity and extreme heat or cold. If they are exposed to extreme conditions, allow them to reach a moderate temperature before playing.
- If a tape is loose inside the cassette, tighten it before playing by putting your finger or a pencil into one of the holes and turning the hub until the tape is tight.
- Loose labels on cassette tapes can become lodged in the mechanism. Remove any loose label material before inserting a cassette.
- Do not leave a tape in the cassette tape player when not in use. High heat in the vehicle can cause the cassette to warp.

Downloaded from www.Manualslib.com manuals search engine

Downloaded from www.Manualslib.com manuals search engine

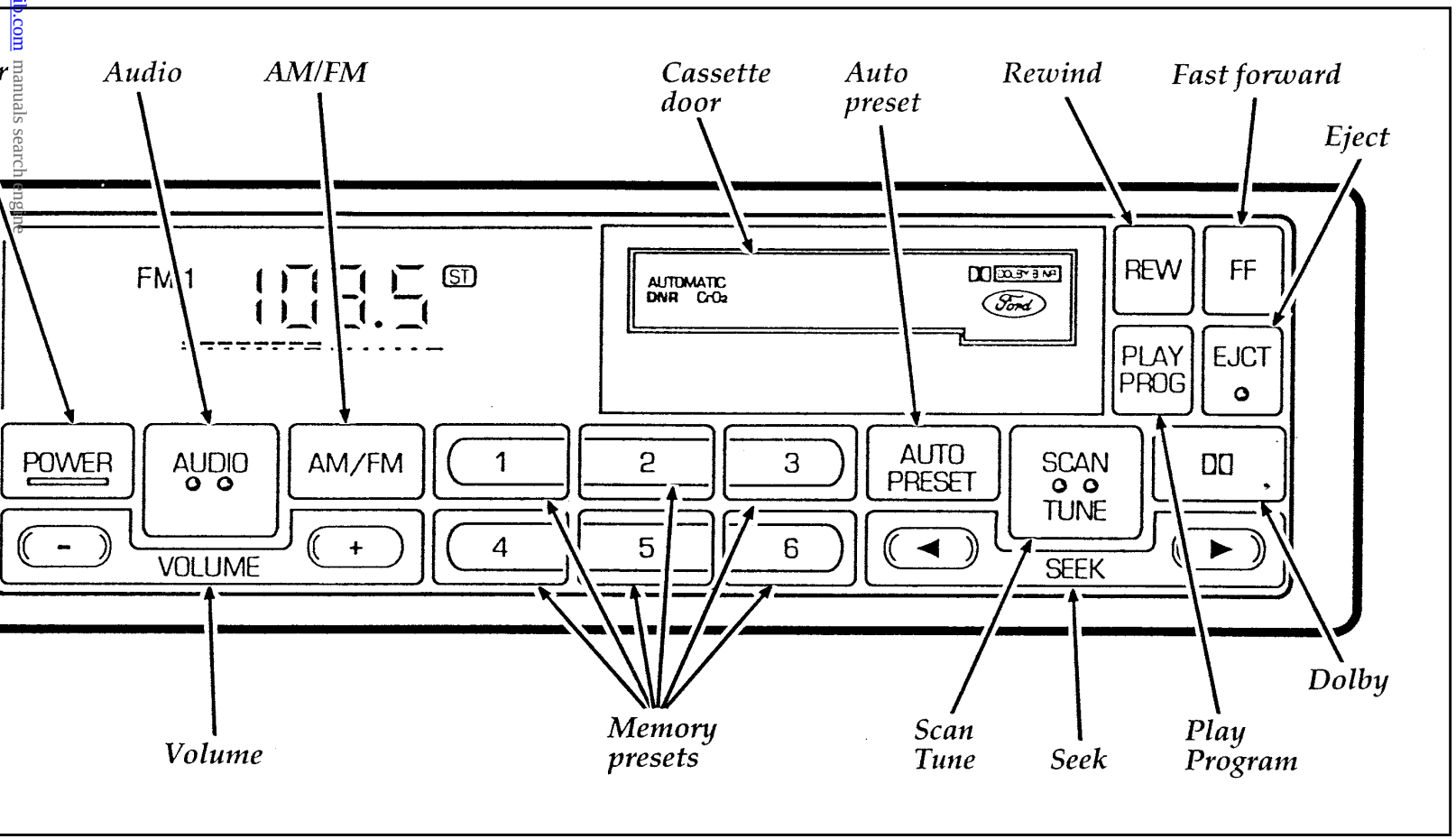

High-Level Audio System

Using the Controls on Your New Radio

How to turn the radio on and off

Press the “POWER” button to turn the radio on. Press it again to turn it off.

How to adjust the volume

Press the +/– side of the “VOLUME” button to increase/decrease volume. Bars illuminate in the display to show the relative volume level.

NOTE: If the volume level is set above a certain listening level when the ignition switch is turned off, when the ignition switch is turned back on, the volume will come back to a “nominal” listening level. However, if the radio power is turned off (with the “POWER” button), the volume will remain in the position it was set at when radio power is switched back on.

Selecting the AM or FM frequency band

Push the “AM/FM” button to select the desired frequency band or to stop/store cassette tape (when in cassette mode). Pushing the button more than once will alternate between AM, FM1 and FM2. These functions are used with the station memory buttons described under *How to tune radio stations.*

Downloaded from www.Manualslib.com manuals search engine

How to tune radio stations

There are four ways for you to tune in a particular station. You can manually locate the station using the “SCAN/TUNE” button, “SEEK” the station, “SCAN” to the station or select the station by using the memory buttons, which you can set to any desired frequency. These four methods are described below.

❑ Using the “TUNE” function

You can change the frequency up or down one increment at a time (FM changes in increments of 200 kHz; AM changes in increments of 10 kHz) by first pressing the “SCAN/TUNE” button twice (display shows “TUNE”), then — **within approximately five seconds** — pressing and releasing either the right (▶) or left (◀) side of the “SEEK” button. To change frequencies quickly, press and **hold down** either the right or left side of the “SEEK” button.

Manual tuning adjusts your radio to any allowable broadcast frequency, whether or not a station is present on that frequency. (See *All About Radio Frequencies* in this section.)

❑ Using the “SEEK” function

This feature on your radio allows you to automatically select listenable stations up or down the frequency band. Press the right (▶) side of the “SEEK” button to select the next listenable station up the frequency band. Press the left (◀) side of the button to select

Downloaded from www.Manualslib.com manuals search engine

❑ Using the “SCAN” function

Pressing the “SCAN/TUNE” button once enters the scan mode (display will indicate “SCN”). Pushing the right (▶) side of the “SEEK” button will begin the scan mode up the frequency band, stopping on each listenable station for approximately a five-second sampling. Pushing the left (◀) side of the “SEEK” button will begin the scan mode down the frequency band, again stopping on each listenable station for approximately a five-second sampling.

To stop the scan mode on the presently sampled station press the “SCAN/TUNE” button again.

❑ Setting the Station Memory Preset buttons

Your radio is equipped with 6 station memory buttons. These buttons can be used to select up to 6 preset AM stations and 12 FM stations (6 in FM1 and 6 in FM2).

Follow the easy steps below to set these buttons to the desired frequencies:

1. Select a band, then select a frequency.
2. Press one of the memory buttons and hold the button until the sound returns. That station is now held in memory on that button.
3. Follow the two steps above for each station memory preset button you want to set.

Downloaded from www.Manualslib.com manuals search engine

❑ Using the Automatic Memory Load feature

If no stations are in memory preset, you can activate the **Auto Memory Load** feature by pressing and holding the “AUTO PRESET” button **for approximately three seconds**. Auto Memory Load sets all memory buttons in AM, FM1 and FM2 sequentially by seeking out the first six strong stations for the respective band and storing them in memory buttons 1-5. (FM2 will store the second set of strong stations from the FM band.)

With Auto Memory Store, you can continually set strong stations into your memory buttons without losing your existing memory presets, which is especially handy while traveling. Your radio will automatically set your memory buttons to the strong local stations so you don’t have to continually manually tune to existing stations.

Activate Auto Memory Store by pushing the “AUTO PRESET” button once. Your radio will set the first five strong stations of the band you are in (AM, FM1 or FM2) into the memory buttons. The display will show “AUTO”, then run through the frequencies, stopping momentarily on the stations being set into the memory buttons. The radio is now in the “AUTO” mode and this display will show “AUTO” each time a preset is activated.

NOTE: If there are less than five strong stations in the frequency band, the remaining unfilled buttons will store

Downloaded from www.Manualslib.com manuals search engine

After all stations have been filled, the radio will begin playing the station stored on memory button 1.

To deactivate the Auto Memory Store mode and return to the manually-set memory button stations (or those stations set using Auto Memory Load), simply push the "AUTO PRESET" button. Display will show "AUTO" then "OFF". The next time Auto Memory Store is activated on that band, the radio will store the next set of five strong stations.

Adjusting the tone balance and speaker output of your radio

❑ Increasing or decreasing bass response

Push the "AUDIO" button repeatedly until the display reads "BASS." Push the right (+) side of the "VOLUME" button to increase bass (more "lows"), and push the left (−) side to decrease bass (less "lows").

❑ Increasing or decreasing treble response

Push the "AUDIO" button repeatedly until the display reads "TREB." Push the right (+) side of the "VOLUME" button to increase treble (more "highs"), and push the left (−) side to decrease treble (less "highs").

❑ Adjusting speaker balance

Balance control allows you to adjust the sound distribution between the right and left speakers. Push the "AUDIO" button

Downloaded from www.Manualslib.com manuals search engine

❑ Adjusting speaker fader

Fade control allows you to adjust the sound distribution between the front and rear speakers. Push the “AUDIO” button repeatedly until the display reads “FADE.” Push the right (+) side of the “VOLUME” button to shift the sound to the front speakers, and push the left (−) side to shift the sound to the rear speakers.

NOTE: Illuminated bars in the display show relative levels of bass and treble, and positions of speaker balance and fader functions (left to right, front to rear).

Using the Controls of Your Cassette Tape Player

NOTE: Radio power must be on to use the cassette tape player or eject a tape.

NOTE: Adjust the volume, treble, bass, balance and fader controls in the same manner as for radio stations.

How to insert a tape

Your cassette tape player is equipped with power loading. Once you insert a tape and push slightly (with the **open edge to the right**), the loading mechanism draws the tape the rest of the way in and play will begin after a momentary tape tightening process. Display indicates “M” (for metal/CrO_2) while tape is playing.

NOTE: A cassette tape can be loaded and

Downloaded from www.Manualslib.com manuals search engine

How to locate a desired track on the tape

There are four ways to quickly locate a desired selection on the tape. You can use the fast forward, rewind, “SEEK” or “SCAN” function. Following are brief descriptions of each.

❑ Fast forwarding the tape

To fast forward the tape, press the “FF” button. The radio will automatically begin playing until fast forward is manually stopped (by pushing the “PLAY PROG” button) or the end of the tape is reached.

At the end of the tape, the direction automatically reverses and plays the other side of the tape.

❑ Fast rewinding the tape

To rewind the tape, press the “REW” button. The radio will automatically begin playing when rewind is manually stopped (by pushing the “PLAY PROG” button) or the beginning of the tape is reached.

❑ Using the “SEEK” function with your cassette tape player

While in the tape mode, push the right (▶) side of the “SEEK” button to seek forward to the next selection on the tape. Push the left (◀) side to seek the beginning of the current tape selection.

NOTE: If you want to restart a currently playing tape selection, press the left (◀) side of the “SEEK” button after

Downloaded from www.Manualslib.com manuals search engine

❑ Using the “SCAN” function with your cassette tape player

Press the “SCAN/TUNE” button to enter the scan mode (display indicates “SCN”). Pushing the right (▶) side of the “SEEK” button will begin the forward scan mode on the tape currently playing, stopping on each tape selection for approximately an eight-second sampling.

Pushing the left (◀) side of the “SEEK” button will begin the reverse scan mode, stopping on each previous tape selection for approximately an eight-second sampling. While scanning, the display indicates whirling sprockets plus an “S” (ooo S).

To stop the scan mode on the presently sampled tape selection press the “SCAN/TUNE” button again.

❑ How to change the side of the tape being played

The alternate side of the tape can be selected at any time by pressing the “PLAY/PROG” button.

How to eject the tape

To stop the tape and eject the cassette, press the “EJCT” button. The radio will resume playing if the radio power is on. The tape cartridge can be ejected with radio power (and/or ignition) on or off.

Downloaded from www.Manualslib.com manuals search engine

How to store the tape

Press the “AM/FM” button to stop the tape player and resume radio play. The cassette will be stored in the tape player and the ■ symbol in the display will be lit until you push the “PLAY PROG” button to resume tape play. Fast forward and fast rewind can be used while the tape is in storage mode without interrupting radio play.

Using the Dolby® B noise reduction feature

NOTE: Noise reduction system manufactured under license from Dolby Labs Licensing Corporation. “Dolby” and double-D symbol are trademarks of Dolby Laboratories Licensing Corporation.

Push the DD button to activate Dolby B Noise Reduction. Push again to deactivate.

Tape error messages

Your cassette tape player is equipped to diagnose certain problems you may experience. Error codes are as follows:

Error 0 — Communication error between the radio controller and the tape controller. The cassette player will eject the tape. Insert the tape again. If the same error code appears, turn the ignition off, then back on again and insert the tape.

Error 1 — Possible problem cartridge. The cassette tape player will eject the tape. Insert the

Downloaded from www.Manualslib.com manuals search engine

Error 2 — Tape eject or load failure. Your cassette tape player will go into the pause mode. Push “EJCT” to eject the tape. If the tape doesn’t eject, refer the problem to qualified personnel for service.

Tips on Caring for the Cassette Player and Tapes

In order to keep your cassette tape player performing the way it was meant to, read and follow these simple precautions:

- ❑ Using a Ford Cassette Cleaning Cartridge to clean the tape player head after 10-12 hours of play will help maintain the best playback sound and proper tape operation.
- ❑ Only cassettes that are 90 minutes long or less should be used. Tapes longer than 90 minutes are thinner and subject to breakage or may jam the tape player mechanism.
- ❑ Protect cassettes from exposure to direct sunlight, high humidity and extreme heat or cold. If they are exposed to extreme conditions, allow them to reach a moderate temperature before playing.
- ❑ Loose labels on cassette tapes can become lodged in the mechanism. Remove any loose label material before inserting cassette.
- ❑ Do not leave a tape in the cassette tape player. High heat in the vehicle can cause the cassette to warp.

Downloaded from www.Manualslib.com manuals search engine

Common Radio Reception Conditions

Several conditions prevent FM reception from being completely clear and noise-free, such as the following:

1. Distance/Strength

The strength of the FM signal is directly related to the distance the signal must travel. The listenable range of an average FM signal is approximately 25 miles (40 kilometers). Beyond this distance, the radio is operating in a fringe area and the signal becomes weaker.

NOTE: Always make sure your antenna (whether you have a power antenna or a manually adjustable antenna) is fully extended to the maximum length for proper reception. If your antenna is not fully extended, you may experience signal loss while traveling in fringe reception areas.

2. Terrain

The terrain (hilly, mountainous, tall buildings) of the area over which the signal travels may prevent the FM signal from being noise-free.

If there is a building or large structure between the antenna and station, some of the signal "bends" around the building, but certain spots receive almost no signal. Moving out of the "shadow" of the structure will allow the station to return to normal.

When the radio waves are reflected off objects or structures, the reflected signal cancels the normal

Downloaded from www.Manualslib.com manuals search engine

To minimize these conditions, a stereo/mono blend circuit has been incorporated into this system. This feature automatically switches a weak stereo signal to a clearer monaural signal, which improves the quality of reception.

Several sources of static are normal conditions on AM frequencies. These can be caused by power lines, electric fences, traffic lights and thunderstorms.

Another reception phenomenon is **Strong Signal Capture and Overload**. This can occur when listening to a weak station and when passing another broadcast tower. The close station may capture the more distant station, although the displayed frequency does not change. While passing the tower, the station may switch back and forth a few times before returning to the original station.

When several broadcast towers are present (common in metropolitan areas) several stations may overload the receiver, resulting in considerable station changing, mixing and distortion.

Automatic gain control circuitry for both AM and FM bands has been incorporated into this system to reduce strong signal capture and overload.

Downloaded from www.Manualslib.com manuals search engine

All About Radio Frequencies

The Federal Communications Commission (FCC) establishes the frequencies that AM and FM radio stations may use for their broadcasts. The allowable frequencies are, AM: 530, 540...1600, 1610 kHz in 10 kHz steps; FM: 87.9, 88.1...107.7, 107.9 MHz in 0.2 MHz steps.

Not all frequencies will be assigned to a given area. This radio will tune to each of these frequencies using MANUAL TUNE and no fine tuning is necessary as radio stations may not use other frequencies.

Some FM radio stations advertise a “rounded-off” frequency which is not the frequency they actually broadcast on. For example, a radio station that is assigned a frequency of 98.7 MHz may call itself “Radio 99” even though 99.0 MHz is not an allowable FM broadcast frequency.

Downloaded from www.Manualslib.com manuals search engine

Important Warranty and Service Information

❑ Warranty

Your sound system is warranted for three years or 36,000 miles (60,000 kilometers), whichever comes first. Consult your vehicle warranty booklet for further information. Ask your dealer for a copy of this limited warranty.

❑ Service

At Ford Electronics, we stand behind our audio systems with a comprehensive service and repair program. If anything should go wrong with your Ford audio system, return to your dealer for service. There is a nationwide network of qualified Ford authorized repair centers to assist you.

Downloaded from www.Manualslib.com manuals search engine

Driving Your Cougar

Driving with an Automatic Overdrive Transmission

The gearshift lever is floor mounted.

The automatic overdrive transmission operates very much like a regular automatic transmission, except it offers the extra overdrive feature.

Putting Your Vehicle in Gear

⚠WARNING
Hold the brake pedal down while you move the gearshift lever from position to position. If you do not hold the brake pedal down, your vehicle may move unexpectedly and injure someone.

To move the shifter out of P (Park), the ignition key must be turned to either the OFF or the ON position and the thumb button must be pushed in. This vehicle is also equipped with the brake shift interlock safety feature which prevents shifting the transmission out of the P (Park) position without the brake pedal being depressed if the key is in the ON position.

To operate:

1. Start the engine.

Downloaded from www.Manualslib.com manuals search engine

Your vehicle is equipped with a Brake Shift Interlock safety feature. This feature prevents the gearshift from being moved from the P (Park) position until the brake pedal is depressed. This feature is active when the ignition is in the ON position. If the gearshift lever CANNOT be moved from P (Park) with the brake pedal depressed:

1. Turn the engine off and remove the ignition key.
2. Apply parking brake.
3. Reinsert the ignition key and turn clockwise to the first position (OFF).
4. Depress the brake pedal, move the gearshift lever to N (Neutral) and start the engine.

⚠**WARNING**
DO NOT DRIVE YOUR VEHICLE UNTIL YOU VERIFY THAT THE BRAKELAMPS ARE WORKING.

If you need to shift out of P (Park) by using the alternate procedure described above, it is possible that a fuse has blown and that your brakelamps may also not be functional. Please refer to the chapter titled *Servicing Your Cougar* in this Owner Guide for instructions on checking and replacing fuses.

The console-mounted gearshift will lock in P (Park) when you turn the key to the LOCK position. When the gearshift is in any position except P (Park), the ignition key cannot be

Downloaded from www.Manualslib.com manuals search engine

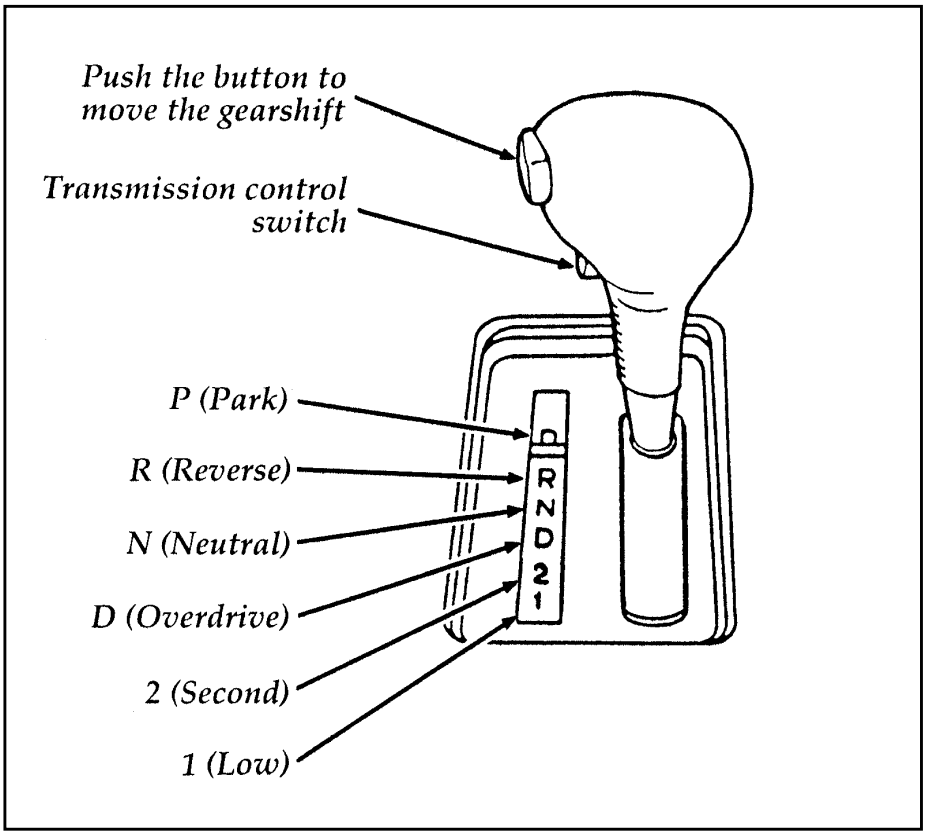

The positions of the console-mounted gearshift

Once the gearshift is secure in the desired position, release the brake pedal and use the accelerator as necessary.

R (Reverse)

With the gearshift in the R (Reverse) position, the vehicle will move backward. You should always come to a complete stop before shifting into or out of R (Reverse).

N (Neutral)

In N (Neutral), the wheels of the transmission are not locked. Your vehicle will roll freely, even on the slightest incline, unless the parking brake or brakes are on.

Downloaded from www.Manualslib.com manuals search engine

Driving

Your vehicle's gearshift is console-mounted on the floor. The Transmission Control Switch (TCS) is located on the gearshift handle. The Transmission Control Indicator Light (O/D OFF) is located on the instrument panel. You can put the gearshift lever in any of the several positions.

The OVERDRIVE OFF light is off (not illuminated) during normal vehicle operation. This allows the transmission to upshift and downshift from 1st through 4th gears. When the TCS is pressed, the Transmission Control Indicator Light will illuminate (O/D OFF) on the instrument panel. When this O/D OFF is illuminated the transmission will upshift and downshift from 1st through 3rd gears.

If the O/D OFF light does not come "on" when the TCS is depressed or if the light "FLASHES" when you are driving, have your vehicle serviced at the first opportunity. If this condition persists, damage could occur to the transmission.

To return the transmission to normal operation (1st through 4th gear) depress the TCS again. This switch may be used to cancel overdrive any time the vehicle is being driven. Each time your vehicle is started, the overdrive system will automatically be in the normal overdrive mode and the light will not be illuminated.

When to use D (Overdrive)

Overdrive is the usual driving position for an automatic overdrive transmission. It works the same way Drive works, automatically upshifting or downshifting as the vehicle speeds or slows.

However, Overdrive also shifts into a fourth

Downloaded from www.Manualslib.com manuals search engine

When to use D (Overdrive) — with transmission control switch activated (O/D OFF light illuminated)

Overdrive may not be appropriate for certain terrain. If the transmission shifts back and forth between Third and Fourth gears while you are driving on hilly roads or if your vehicle does not have adequate power for climbing hills, depress the TCS.

You can depress the TCS at any speed.

When to use 2 (Second)

Use 2 (Second) for start-up on slippery roads or to give you more engine braking to slow your vehicle on downgrades.

When to use 1 (Low)

Use 1 (Low) when driving down steep grades. It gives more engine braking to slow your vehicle than 2 (Second) on the downgrades. You can upshift from 1 (Low) to 2 (Second) or from 1 (Low) to Overdrive at any speed.

P (Park)

Always come to a complete stop before you shift into P (Park). Make sure that the gearshift is securely latched in P (Park). This locks the transmission and prevents the rear wheels from rotating.

Downloaded from www.Manualslib.com manuals search engine

⚠WARNING
Always set the parking brake fully and make sure that the gearshift is securely latched in P (Park).

⚠WARNING
Never leave your vehicle unattended while it is running.

You can tell a console-mounted gearshift is securely latched in P (Park) if the lever is adjacent to the P (Park) and you cannot move it without pushing in the thumb button.

Traction-Lok Axle (If equipped)

This axle provides added traction on slippery surfaces, particularly when one wheel is on a poor traction surface. Under normal conditions the Traction-Lok axle functions as a standard rear axle.

Extended use of other than matching size tires on a Traction-Lok rear axle could result in a permanent reduction in effectiveness. This loss of effectiveness does not affect normal driving and should not be noticeable to the driver.

⚠WARNING
To avoid injury, never run the engine with one wheel off the ground, such as when changing a tire.

Downloaded from www.Manualslib.com manuals search engine

Traction Assist™ (If equipped)

Your vehicle may be equipped with the optional Traction Assist™ system. This system helps prevent wheel spin in order to improve tire traction and is an especially useful feature when you drive in hilly areas or on slippery, icy or snowy roads.

Traction Assist™ works automatically by rapidly applying and releasing the brakes to prevent one or both of the rear drive wheels from spinning during acceleration.

The Traction Assist™ system can be manually turned off, to allow wheelspin if you want, by pushing the TRACTION ASSIST. switch (located on the console) when the vehicle is not in the Traction Assist™ mode. The word “OFF” in the switch will light up to indicate the system is off. The Traction Assist™ system will automatically be on each time the engine is started. During ordinary driving, it is recommended to leave the system turned on. The Traction Assist™ system will then always be ready to operate when needed.

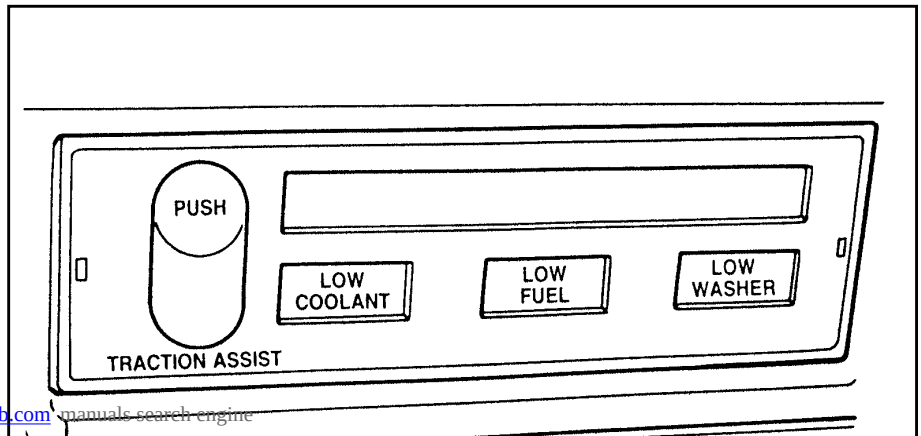

Downloaded from www.Manualslib.com manuals search engine

During the Traction Assist™ function, which most often occurs during low speed acceleration on slippery surfaces, a noise may be heard coming from the engine compartment. This noise is created by the ABS pump and is normal and may last for a few seconds during the acceleration of the vehicle.

In general, this system improves your vehicle's stability and acceleration performance when road conditions warrant. Traction Assist™ is fully effective up to approximately 25 mph (40 km/h). At 25 mph (40 km/h) the function begins to taper off until it no longer operates above 34 mph (55 km/h).

If the Traction Assist™ system is cycled excessively, the system will shut down to prevent the rear brakes from overheating. During this shutdown period, the word OFF in the traction assist switch will be illuminated showing that the traction assist system is inoperative. A cooling down period is required to prevent damage to the rear brakes. This time period varies and depends on brake usage during the cooling down period. Anti-Lock braking is not affected and will function normally during the cool down period.

NOTE: Traction-Lok axles are not an available option on vehicles equipped with traction assist.

Downloaded from www.Manualslib.com manuals search engine

Steering Your Vehicle

Your vehicle comes with power steering. Power steering uses energy from the engine to help steer your vehicle.

If the amount of effort needed to steer your vehicle changes at a constant vehicle speed, have the power steering system checked. If the power steering system breaks down (or if the engine is turned off), you can steer the vehicle manually but it takes more effort.

Never hold the steering wheel to the extreme right or left for more than five seconds if the engine is running. This can damage the power steering pump.

Speed Sensitive Power Steering (If equipped)

The steering system in 4.6L engine vehicles is speed sensitive. This means that the steering effort is light for parking and heavier for highway driving. However, if you have to swerve around an object or another vehicle, your steering will have full power assist.

Brakes

Applying the Brakes

Braking non ABS models

Your vehicle has power front disc brakes and rear drum brakes. Anti-lock disc brakes on all four wheels are optional. They adjust automatically as the brake pads or linings wear down.

Downloaded from www.Manualslib.com manuals search engine

On vehicles without anti-lock brakes, extreme braking can make the wheels lock and slide, possibly decreasing your control of the steering. If you lock the wheels, release the brake pedal and repeat the “squeeze” technique.

Braking with ABS brakes

On vehicles with anti-lock brakes, the wheels will not lock and slide when you press down hard on the brake pedal. The anti-lock brakes automatically start releasing and reapplying the front brakes independently and the rear brakes together whenever your wheels start to lock. Do not “pump” the brake pedal on vehicles equipped with anti-lock brakes. When this happens, you will feel the brake pedal pulse. This “pulse” may be an unfamiliar feeling but it is normal and indicates the ABS is working as designed.

Do not drive with your foot resting on the brake pedal; you will wear out the linings and increase your vehicle’s stopping distance. Brake rotor damage may also eventually occur.

NOTE: If you are driving down a long or steep hill, shift to a lower gear and do not apply your brakes continuously. If you apply your brakes continuously, they may overheat and become less effective.

Occasional brake squeal during light to moderate stops does not affect the function of the brake system and is normal. However, if the squeal becomes louder or more frequent, have your

Downloaded from www.Manualslib.com manuals search engine

Ford Motor Company has not found any detrimental effects of popular mobile radio transmitting equipment installed on vehicles with the anti-lock brake system, if the equipment is installed according to the manufacturer's instructions. However, if mobile radio transmitting equipment is installed in your vehicle and, if either the anti-lock brake system cycles or the check anti-lock light comes on at any time other than right after you turn the key to ON or during a sudden stop, have your mobile radio dealer inspect the installation.

Parking Brake

The parking brake should be used whenever you park your vehicle.

The parking brake pedal is suspended just below the bottom of the instrument panel to the left of the brake pedal.

To set the parking brake while parking your vehicle, apply the brake pedal with your right foot and hold it while you push the parking brake down firmly with your left foot. The brake system warning light will glow.

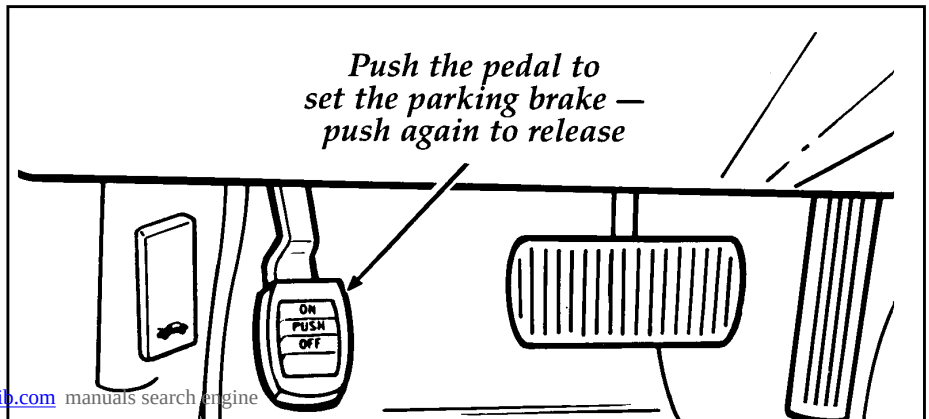

Downloaded from www.Manualslib.com manuals search engine

⚠WARNING

Always set the parking brake fully and make sure that the gearshift is securely latched in P (Park).

To release the parking brake, press down on the pedal until you hear a click. Lift your foot off the pedal. The brake is now released and will reset to lock the next time you press the pedal, located below the lower left corner of the instrument panel. The Brake System Warning Light will glow if the parking brake is not fully released when the engine is running.

Always check the Brake Warning Light each time you start your engine. Driving with the parking brake on will cause the brakes to wear out quickly and will reduce the fuel economy.

⚠WARNING

If the parking brake is fully released, but the Brake System light remains on, have the brakes checked immediately. They may not be working properly.

The parking brake system is designed for static parking only and is not designed to stop a moving vehicle, but you can use the parking brake to stop your vehicle in an emergency if the normal brakes fail. However, since the parking brake applies only the rear brakes, the stopping distance will increase greatly and the handling of your vehicle will be adversely affected.

Downloaded from www.Manualslib.com manuals search engine

Driving Under Special Conditions

Tips for Safe Driving

As with any new vehicle, yours may drive and handle differently from your previous vehicle. Use care until you become accustomed to its various features and driving characteristics.

Operate your vehicle within reasonable limits. Sudden acceleration, deceleration, turning, or combinations of these maneuvers can cause a vehicle to behave differently than anticipated.

Driving in Bad Weather

Slippery roads

Drive cautiously on wet or snowy roads:

- ❑ Do not quickly move the steering wheel unless necessary.
- ❑ Drive slower than you normally would.
- ❑ Do not use speed control.
- ❑ Give your vehicle more distance to stop.
- ❑ Pump the brake pedal steadily and evenly to avoid locking your wheels. (Does not apply to vehicles with anti-lock brakes.)
- ❑ Consider using one of the lower gears.

⚠WARNING
To avoid skidding and losing control on slippery roads, do not downshift into First

Downloaded from www.Manualslib.com manuals search engine

⚠WARNING

If your vehicle has speed control, do not use it on slippery roads. You could lose control of your vehicle and could injure someone.

If your vehicle gets stuck (for example, in mud or snow), you may try to “rock” it out of the spot. Shift, in a steady rhythm, between forward and reverse gears. At the same time, press lightly on the accelerator.

⚠WARNING

Do not spin the wheels at over 35 mph (55 km/h). The tires may fail and injure a passenger or bystander.

By moving the vehicle backward and forward, you may gain enough momentum to move out of the spot. Do not rock the vehicle for more than a few minutes. This may overheat the engine, damage the transmission, or damage the tires. If you are still stuck after a minute or two of rocking, call for a tow truck.

High water

Do not drive through flooded areas unless you are sure that the water is below the bottom of the wheel rims.

If you must drive through high water, drive slowly. You may have limited traction or wet brakes, so allow extra stopping distance because your vehicle will not stop as quickly as usual.

Downloaded from www.Manualslib.com manuals search engine

Driving With a Heavy Load

There are limits to the amount of weight your vehicle can carry or tow. The total weight of your vehicle, plus the weight of the passengers and cargo, should never be more than the Gross Vehicle Weight Rating (GVWR). Also, the weight that your vehicle carries over the front axle and rear axle should never be more than the Gross Axle Weight Rating (GAWR) for the respective axle.

You can find your vehicle's GVWR and GAWR on the Safety Compliance Certification Label on the left front door lock facing or the door latch post pillar.

The weight limits of your vehicle's tires affect the GVWR or GAWR limitations. Usage of replacement tires with higher weight limit than originals does not increase GVWR or GAWR. Usage of lower capacity replacement tires may lower GVWR and GAWR limitations.

⚠WARNING

If the GVWR or the GAWR specified on the Safety Compliance Certification Label is exceeded, your vehicle may be damaged or you may lose control and injure someone.

Downloaded from www.Manualslib.com manuals search engine

Limiting Your Vehicle's Load

The load that you add to your vehicle must not exceed the maximum load stated on the Safety Compliance Certification Decal attached to the left front door pillar.

To figure the weight of your vehicle's load, add the weights of:

- ❑ the driver and passengers
- ❑ luggage and any other items that you put in your vehicle
- ❑ the tongue load of the loaded trailer
- ❑ the weight of any equipment that has been added to your vehicle since it was delivered to your dealer

If you do not know the actual weights of these items, use the following procedure to figure the weight of a load:

1. Weigh your vehicle without the driver, passengers and luggage. You might take your vehicle to a shipping company or an inspection station for trucks.
2. Then weigh your vehicle with the driver, passengers and luggage.
3. Subtract the first reading from the second to figure the total weight of the load.

After determining this load, you must also make sure that the total weight of your vehicle, plus the load it carries, is less than its GVWR. Also,

Downloaded from www.Manualslib.com manuals search engine

If your vehicle exceeds the GVWR, remove cargo from your vehicle accordingly. If your vehicle exceeds the GAWR for either axle, shift the load or remove cargo accordingly.

⚠WARNING

Improper distribution of your vehicle's load or carrying weight in excess of the amount shown on the tire decal can cause rapid tire wear or loss of vehicle control.

Trailer Towing

Your vehicle does not come from the factory fully equipped to tow. No towing packages are available through Ford or Lincoln/Mercury dealers.

Because towing a trailer puts extra strain on your vehicle, you must follow certain precautions for your safety and the good of your vehicle:

- ❑ Stay within the load limits for towing your vehicle. (See *Trailer towing specifications* in this chapter.)
- ❑ Carefully and thoroughly prepare your vehicle for towing, making sure to use the right equipment and to attach it properly. (See *Preparing to Tow* in this chapter.)
- ❑ Use extra caution when driving your vehicle while you tow. (See *Driving while you tow* in this chapter.)
- ❑ Service your vehicle more frequently if you

Downloaded from www.Manualslib.com manuals search engine

Ten to 15% of the loaded trailer's weight should be on the tongue. However, the tongue load should never exceed 10% of the maximum weight that your vehicle can safely tow.

⚠WARNING
Do not tow a trailer when the temporary spare tire is being used.

Your vehicle is classified as a light duty towing vehicle. The amount of weight that you can safely tow depends on the optional equipment on your vehicle. See the following chart.

Trailer towing specifications

If your vehicle's engine is this size...	...Your loaded trailer should weigh no more than...	
3.8L	2,000 lbs.	907 kg.
4.6L	2,000 lbs.	907 kg.

Preparing to Tow

For your safety and for the good of your vehicle, use the right equipment for the type of trailer you tow. Also, make sure that all towing equipment is properly attached to your vehicle. If you are not certain that you are using the right equipment in the proper manner, see your Ford or Lincoln-Mercury dealer.

Do not use hitches that clamp onto your vehicle's bumper. The bumper is not designed to bear the load.

Downloaded from www.Manualslib.com manuals search engine

Using the hitch

Your vehicle uses a *load carrying* hitch. Because this type of hitch places the tongue load of a trailer on the rear wheels of your vehicle, you must distribute the load in your trailer so that only 10 to 15% of the total weight of the trailer is on the tongue.

Tie down the load so that it does not shift and change the weight on the hitch. This will prevent damage to your vehicle and make your vehicle easier to handle.

Connecting the safety chains

Always attach the trailer's safety chains to your vehicle. They help protect your trailer if the hitch breaks.

To connect the trailer's safety chains:

1. Cross the chains under the trailer tongue and attach them to your vehicle's frame or hook retainers. Never attach the safety chains to your vehicle's bumper. The bumper is not designed to bear the weight of a trailer.

2. Make sure that you leave enough slack in the chains to allow you to turn corners.

If you use a rental trailer, follow the instructions that the rental agency gives you.

Downloaded from www.Manualslib.com manuals search engine

Connecting the trailer's brakes

Electric brakes and manual, automatic, or surge-type hydraulic brakes are safe if you install them properly and adjust them according to the manufacturer's instructions. Be sure that your trailer's brakes meet local and federal regulations.

If your vehicle is equipped with the optional trailer tow package, provisions have been made under the instrument panel for installation of an electronic brake controller.

⚠WARNING

Do not connect a trailer's hydraulic brake system directly to your vehicle's brake system. Your vehicle may not have enough braking power and your chances of having a collision greatly increase.

Connecting the trailer's lights

Do not connect a trailer's lighting system wiring directly to your vehicle's lighting system wiring. To get the proper equipment for hooking up your trailer's lights, see your local trailer dealer and your Ford dealer. Be sure to follow their instructions carefully.

If your vehicle is equipped with the optional trailer tow package, the proper lamp wiring and equipment has been installed at the factory. The trailer feed wire (supplied in a box in the luggage compartment) needs a connector compatible with your trailer prior to installation.

Downloaded from www.Manualslib.com manuals search engine

Driving While You Tow

Be especially careful when driving while you tow a trailer. Never drive faster than 45 mph (70 km/h) when you tow in hilly country on hot days. Also, anticipate stops so that you can brake gradually.

If you tow in Overdrive while riding through hilly country, your vehicle may frequently shift between Overdrive and Third gears. To prevent your vehicle from shifting too much, depress the Transmission Control Switch (TCS). This will also give the engine more power going up hills and better engine braking going down hills.

If you use the speed control while you are towing on very long, steep grades, the speed control may shut off.

Servicing your vehicle if you tow

If you tow a trailer for a long distance, your vehicle will need to be serviced more frequently than usual. Refer to the *Maintenance Schedule and Record* booklet for additional information.

Downloaded from www.Manualslib.com manuals search engine

Roadside Emergencies

Jump-Starting Your Vehicle

Your vehicle's battery may die if you leave the lights on or any electrical equipment on after you turn the engine off. If this happens, you may be able to jump-start from a booster battery to start your vehicle.

⚠WARNING

The gases around the battery can explode if exposed to flames, sparks, or lit cigarettes. An explosion could result in injury or vehicle damage.

⚠WARNING

To protect yourself when charging a battery, always shield your face and eyes. Make sure that you can breathe fresh air.

⚠WARNING

Applying too much pressure on the ends when lifting a battery could cause acid to spill. Lift the battery with a carrier or with your hands on the opposite corners.

⚠WARNING

Downloaded from www.Manualslib.com manuals search engine

Batteries contain sulfuric acid which burns

If the acid touches someone's skin, eyes, or clothing, immediately flush the area with water for at least 15 minutes. If someone swallows the acid, have him or her drink lots of milk or water first, then Milk of Magnesia, a beaten egg, or vegetable oil. Call a doctor immediately.

To avoid damaging your vehicle or your battery, and to avoid injury to yourself, follow these directions for preparing your vehicle to jump-start and connecting the jumper cables in the order they are given. If in doubt, call for road service.

Preparing Your Vehicle

NOTE: also see label on battery.

1. Your vehicle has a 12-volt starting system, so you need to use a 12-volt jumper system. You will damage your starting motor, ignition system, and other electrical parts if you connect them to a 24-volt power supply (either two 12-volt batteries in series or a 24-volt generator set).

2. Do not disconnect the battery of the disabled vehicle. You could damage the vehicle's electrical system.

3. Park the booster vehicle close to the hood of the disabled vehicle. **Make sure the vehicles do not touch each other.** Set the parking brake on both vehicles and stay clear of the engine cooling fan and other moving parts.

4. Check all battery terminals and remove any excessive corrosion before you attach the jumper cables.

5. Turn on the heater fan in both vehicles.

Downloaded from www.Manualslib.com manuals search engine

Connecting the jumper cables

1. Connect one end of the first jumper cable to the positive (+) terminal of the discharged battery. (You can connect either jumper cable to the positive (+) terminal, as long as you use the same cable for both positive terminals.) Most jumper cables have a red cable and a black cable. The red cable is generally used for the positive terminals and the black for the negative ones.

2. Connect the other end of the first cable to the positive (+) terminal of the booster battery.

3. Connect one end of the second cable to the negative (−) terminal of the booster battery — NOT to the discharged battery.

4. Connect the other end of that cable to a good metallic surface on the engine or frame of the disabled vehicle making sure it is clear of any rotating engine components. The following illustrations show where you can find a metallic surface.

⚠WARNING

Do not connect the end of the second cable to the negative (−) terminal of the battery to be jumped. A spark may cause an explosion of the gases that surround the battery.

Downloaded from www.Manualslib.com manuals search engine

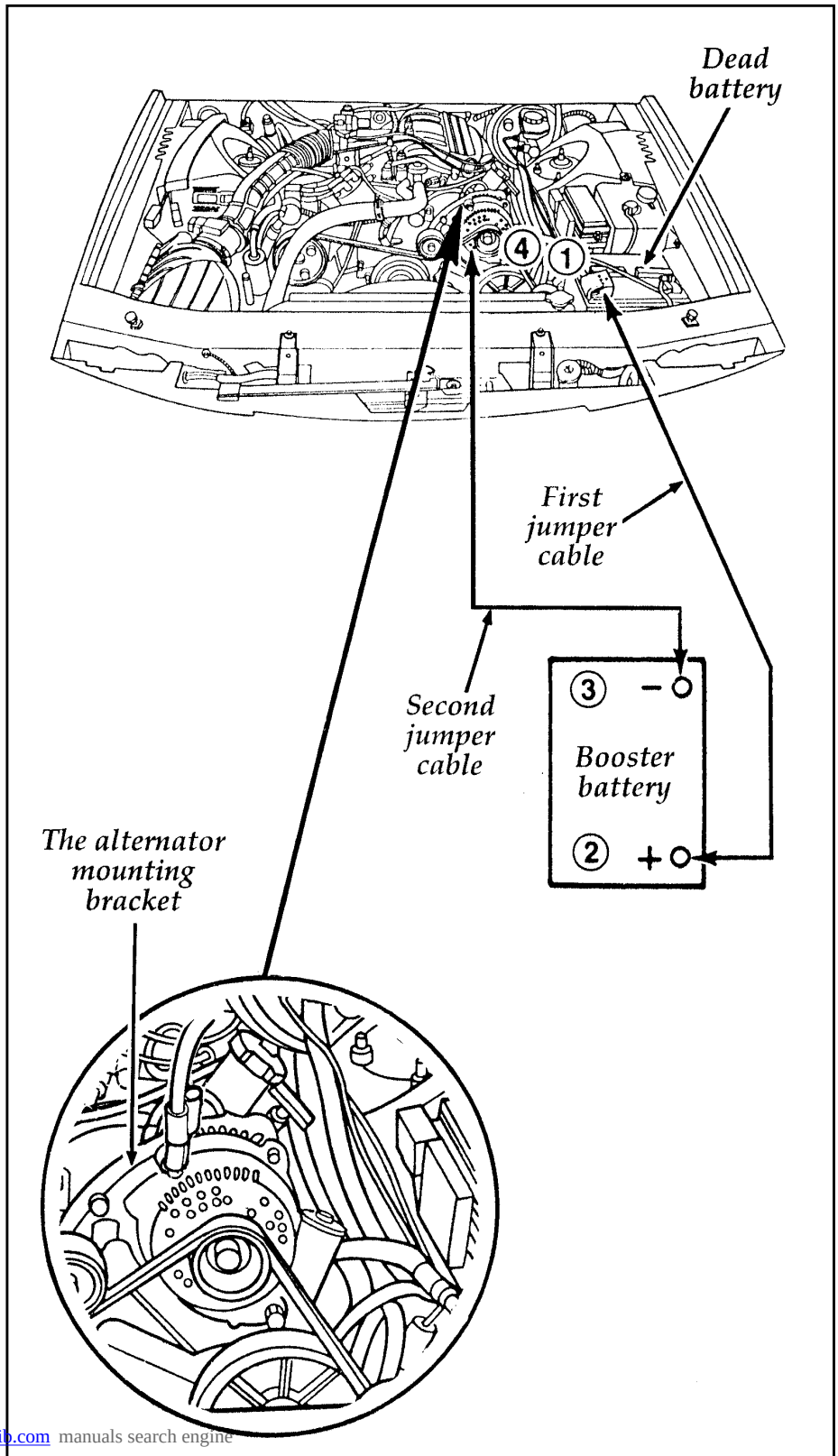

Downloaded from www.Manualslib.com manuals search engine

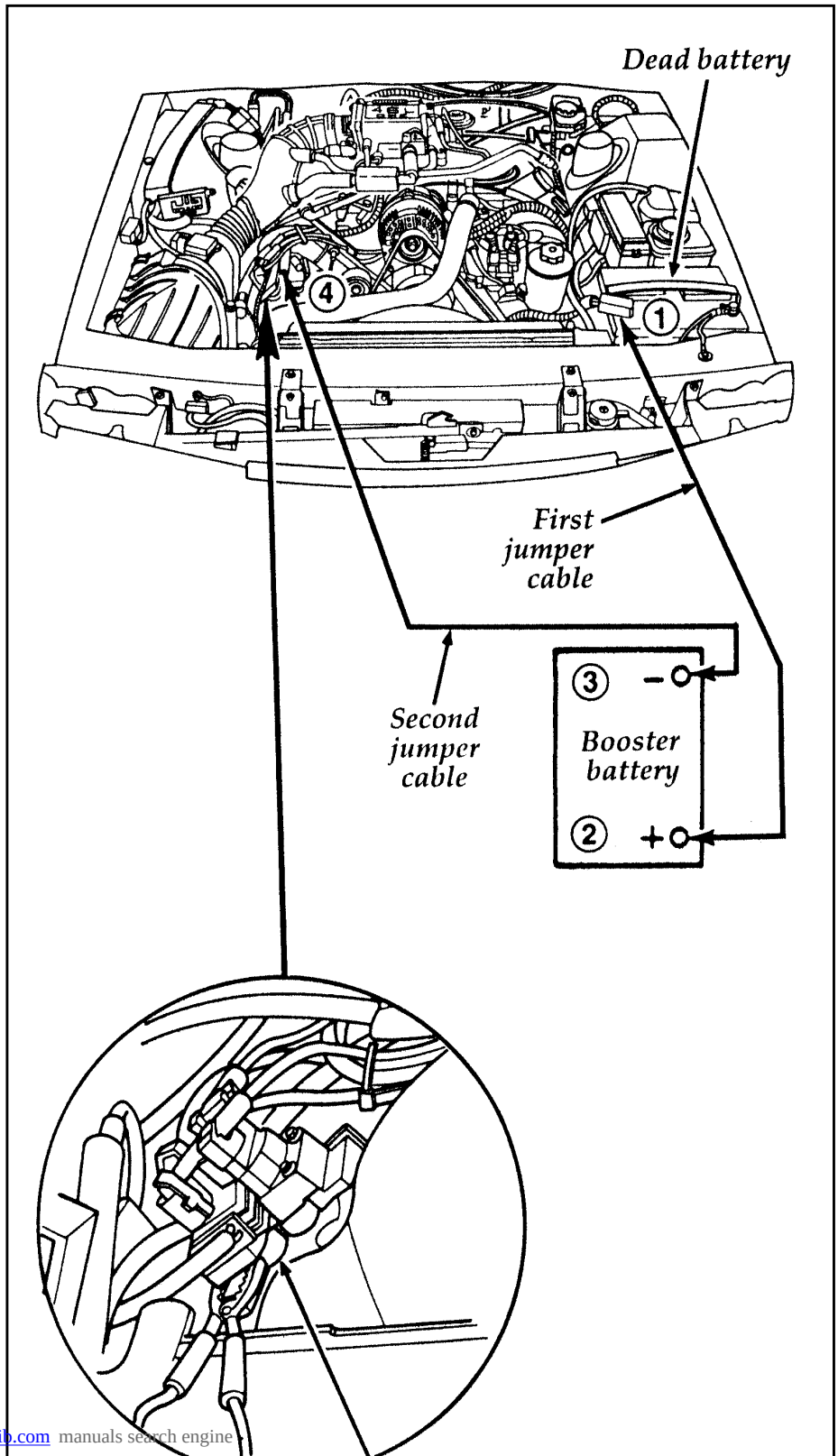

Downloaded from www.Manualslib.com manuals search engine

Jump-Starting

1. Make sure that the jumper cables are not in the way of moving engine parts, then start the booster vehicle. Run the engine at a moderate speed.

2. Let the discharged battery charge for a few minutes and then start the disabled vehicle. It may take a couple of tries before the vehicle starts. If the vehicle does not start after several attempts, there may be a different problem.

3. When both vehicles are running, let them idle for a few minutes to charge the discharged battery.

Removing jumper cables

1. **Always remove the jumper cables in the reverse order.** Remove the negative (−) end of the jumper cable from the metallic surface on the engine or frame of the disabled vehicle.

2. Remove the negative (−) cable from the booster battery.

3. Remove the positive (+) cable from the booster battery.

4. Remove the other end of the positive (+) cable from the discharged battery.

After the vehicle is started, let it idle for a while to let the engine “relearn” its idle conditions. Drive it around for a while with all electrical

Downloaded from www.Manualslib.com manuals search engine

NOTE: If your vehicle is equipped with a 4.6L engine you will need to perform additional steps after your vehicle has been jump started. See *Readiness for Inspection/Maintenance Testing* in Servicing Your Vehicle chapter.

Changing a Tire

If you get a flat tire while you are driving, do not apply the brake heavily. Instead, gradually decrease the speed. Hold the steering wheel firmly and slowly move to a safe place on the side of the road. Park on a level spot, turn off the ignition, set the parking brake, and turn on the hazard flashers.

The Temporary Spare Tire

You have a high pressure temporary spare tire. This spare tire is smaller than a regular tire and is designed for emergency use only. Use it only when you get a flat tire and replace it as soon as you can. This spare tire is marked with the words “TEMPORARY USE ONLY” so that you can easily identify it.

NOTE: Extended use of other than conventional spare tires on a Traction-Lok rear axle could result in a permanent reduction in effectiveness. This loss of effectiveness does not affect normal driving and should not be noticeable to the driver.

⚠WARNING
If you use the temporary spare tire

Downloaded from www.Manualslib.com manuals search engine

When you drive with the temporary spare tire, DO NOT:

- ❑ exceed 50 mph (80 km/h) under any circumstances.
- ❑ load your vehicle so that it is heavier than the maximum vehicle load rating listed on the tire decal.
- ❑ tow a trailer.
- ❑ use tire chains on this tire.
- ❑ try to repair the temporary spare tire or remove it from its wheel.
- ❑ use the wheel for any other type of vehicle.
- ❑ drive through an automatic car wash with this tire. Because the temporary spare tire is smaller than a conventional tire, it reduces the ground clearance. Your vehicle may get caught in the rails and it could be damaged.

Downloaded from www.Manualslib.com manuals search engine

Spare Tire Location

The spare is stored in the trunk.

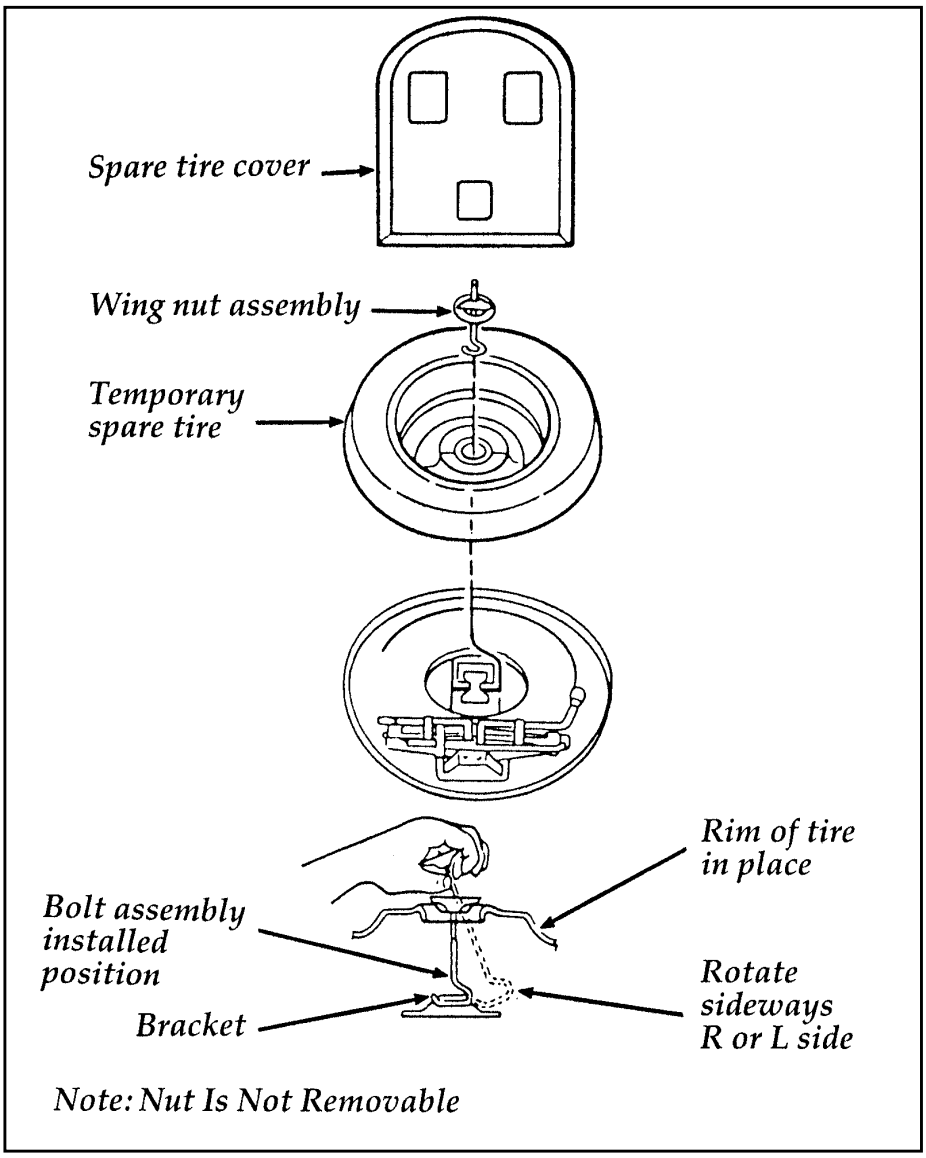

The spare tire location

To remove the spare tire:

1. Remove the spare tire cover.
2. Unscrew the wing-nut holding down the spare tire.

Downloaded from www.Manualslib.com manuals search engine

Preparing to Change the Tire

1. Make sure that your vehicle will not move or roll. Put the gearshift in P (Park). Set the parking brake and block the wheel that is diagonally opposite the tire that you are changing.

When one of the back wheels is off the ground, the transmission alone will not prevent the vehicle from moving or slipping off the jack, even if the vehicle is in P (Park). To prevent the vehicle from moving when you change a tire, be sure the parking brake is set, then block the wheel (both directions) that is diagonally opposite (other side and end of the vehicle) to the tire being changed.

⚠WARNING
If the vehicle slips off the jack, you or someone else could be seriously injured.

⚠WARNING
To avoid injury, never run the engine with one wheel off the ground, such as when changing a tire.

2. Get out the spare tire and jack.

3. Remove any optional wheel covers or hubcaps with the tapered end of a wheel nut wrench. Insert the handle of the wrench and twist it against the inner wheel cover flange. For more about removing wheel covers, see the information later in this chapter.

Downloaded from www.Manualslib.com manuals search engine

4. Loosen each wheel lug nut one-half turn counterclockwise, but do not remove them until the tire is raised off the ground. You should pull up on the handle rather than push to develop maximum force to loosen wheel lug nuts. See *Anti-Theft Wheel Lug Nuts* later in this chapter for information on removing anti-theft lug nuts.

Removing and Replacing the Tire

1. Find the underbody notches closest to the wheel to be removed. Center the jack between (2) underbody notches and turn the handle of the jack clockwise until the wheel is completely off the ground.

⚠**WARNING**
To lessen the risk of personal injury, do not put any part of your body under the vehicle while changing a tire. Do not start the engine when your vehicle is on the jack. The jack is only meant for changing the tire.

Downloaded from www.Manualslib.com manuals search engine

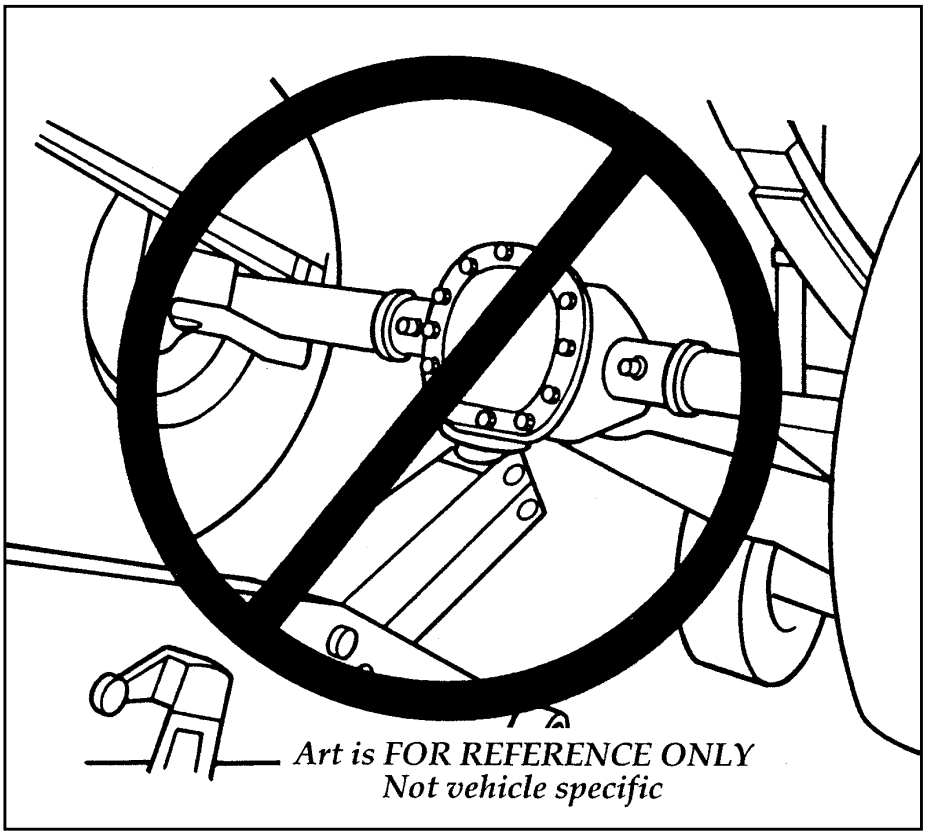

The improper lift point

NOTE: Never use the differential housing as a lift point.

Downloaded from www.Manualslib.com manuals search engine

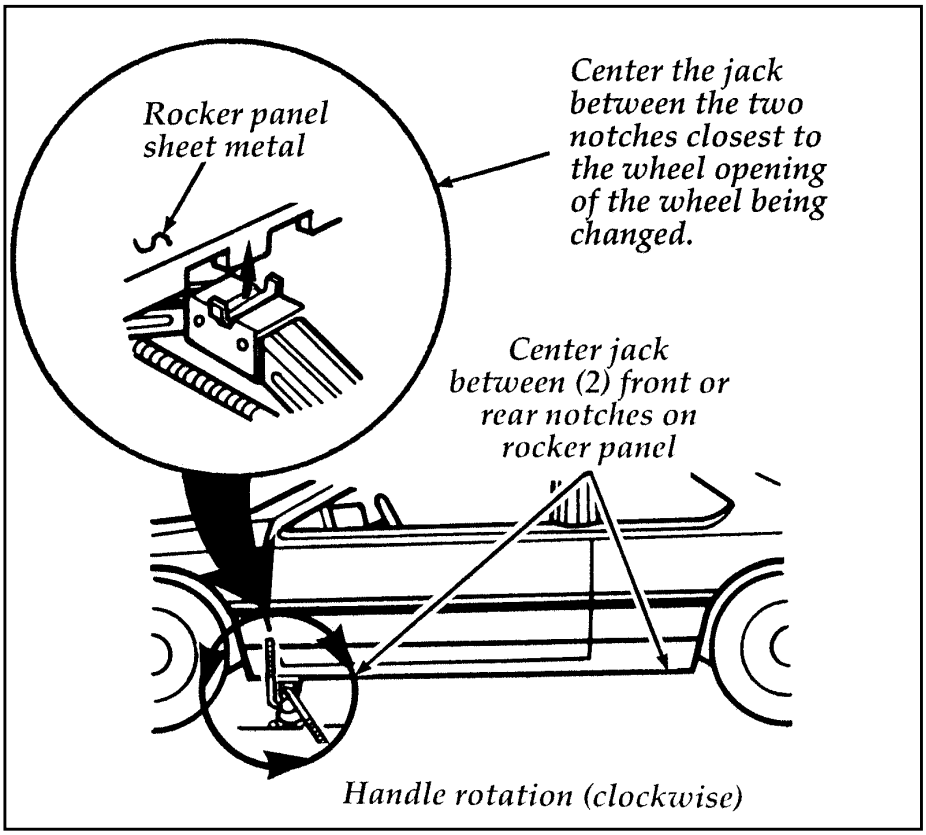

The notches for the jack

2. Turn the jack handle clockwise until the wheel clears the ground. Remove the wheel lug nuts.

3. Replace the flat tire with the spare tire, making sure that the air valve stem is facing outward.

4. Reinstall the lug nuts, tightening until the wheel is snug against the hub. The beveled edges on the lug nuts face inward. Do not fully tighten the lug nuts until you lower the vehicle. If you do, you could force the vehicle off the jack.

5. Lower the vehicle by turning the jack handle

Downloaded from www.Manualslib.com manuals search engine

6. Remove the jack and fully tighten the lug nuts in the order shown in the following illustration. As soon as possible, have your dealer or a qualified service technician check the lug nuts for proper torque specifications.

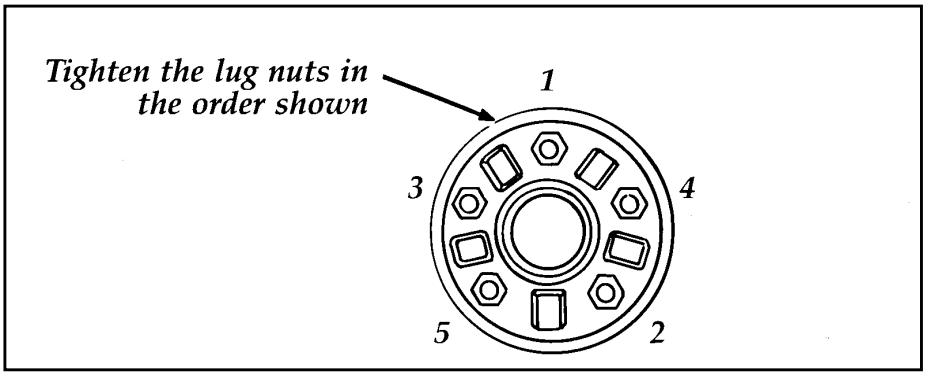

The lug nuts on the wheel

7. Place any wheel covers and ornaments in the trunk.

8. Put the tire, jack, and wrench away. Make sure the jack is securely fastened so it does not rattle when you drive.

9. Unblock the wheels.

Aluminum Road Wheel Ornaments (If equipped)

To remove the ornament, stick the tapered end of the jack handle between the ornament and wheel and pry off the ornament.

To replace the ornament, stick one side of the ornament into the center of the wheel and strike the other side with the palm of your hand.

Downloaded from www.Manualslib.com manuals search engine

Center Wheel Cover

To remove the wheel cover:

1. Pry the center ornament from the wheel cover using the tapered end of the jack handle. Do not use a screwdriver or any other tool. If you do, you may damage the cover. The wheel, with the wheel cover still attached, may now be removed from the vehicle by removing the five lug nuts.
2. If the tire needs to be removed from the wheel, remove the five screws, using a Phillips head screwdriver. Then pull the wheel cover off the wheel.

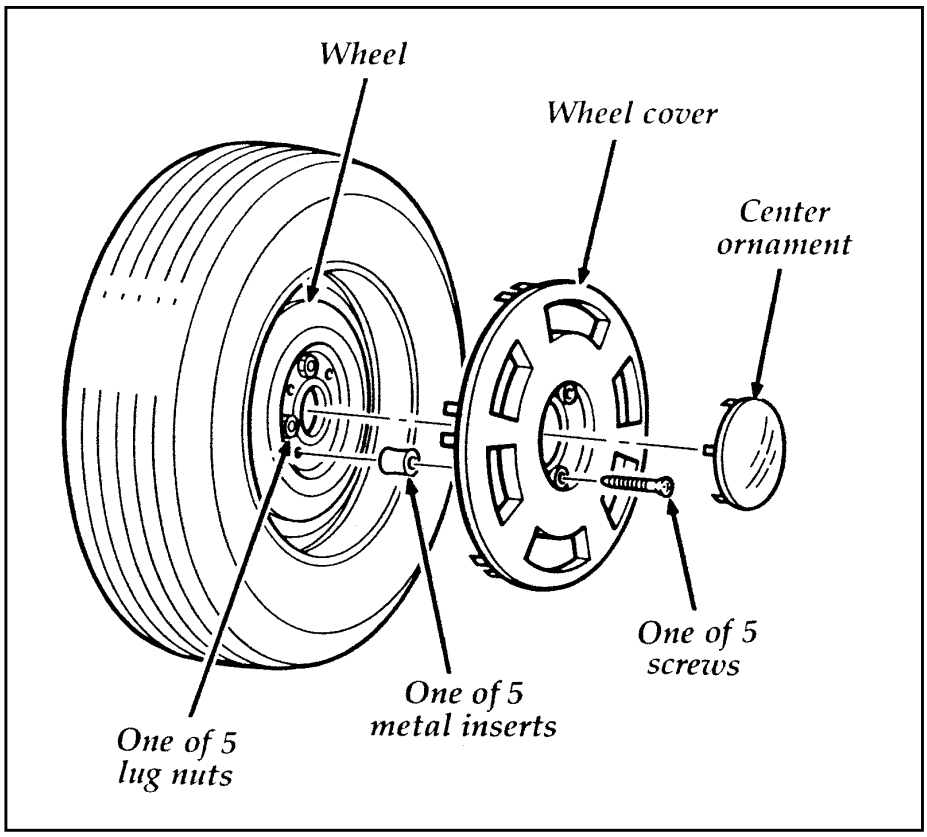

The center attachment wheel cover

To replace the wheel cover:

Downloaded from www.Manualslib.com manuals search engine

2. Align the legs of the ornament with the slots on the wheel cover. Strike the ornament with the palm of your hand.

Anti-Theft Wheel Lug Nuts (If equipped)

If your vehicle has this option, one of the lug nuts on each wheel locks and must be unlocked with a special key. The key and registration card are attached to the lug wrench and stored with the spare tire. If you lose the key, send the registration card to the manufacturer (not the dealer) to get a replacement key.

NOTE: If entire lug wrench/lug nut key assembly is lost, see your nearest Ford or Lincoln-Mercury dealer who has access to a master set of keys.

DO NOT USE A POWER IMPACT WRENCH ON THE LUG NUT KEY.

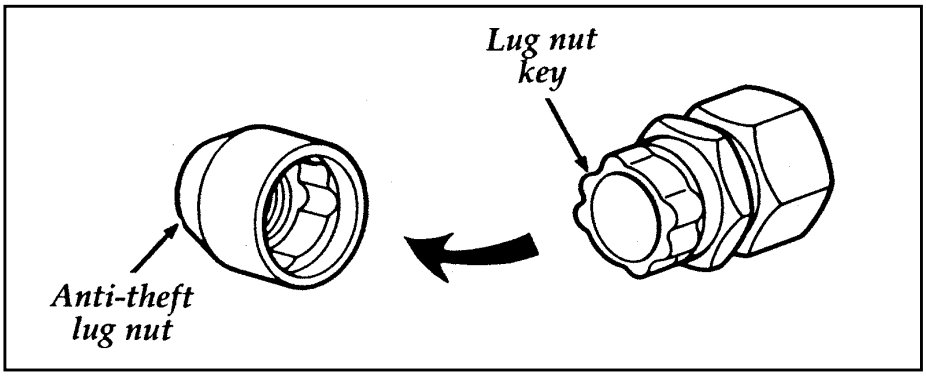

The anti-theft lug nut and key

Removing the anti-theft lug nut

Insert the key over the locking lug nut. Make sure that you hold the key square to the lug nut. If you hold the key on an angle, you may damage the key and the lug nut.

Downloaded from www.Manualslib.com manuals search engine

Replacing the anti-theft lug nut

Insert the key over the locking lug nut. Place the lug nut wrench over the lug nut key and, while applying pressure on the key, install the lug nut.

If the Engine Cranks But Does Not Start or Does Not Start After a Collision

The Fuel Pump Shut-off Switch

If the engine cranks but does not start or if you have had a collision, the fuel pump shut-off switch may have been triggered. The shut-off switch is a device that stops the fuel pump when your vehicle has been involved in a substantial jolt.

For information on how to check and reset the fuel pump shut-off switch, see *Fuel pump shut-off switch* in the Index.

Towing Your Vehicle

If you need to have your vehicle towed, contact a professional towing service or, if you are a member, your roadside assistance center. Recommended towing options include wheel lift towing or flat bed towing.

Downloaded from www.Manualslib.com manuals search engine

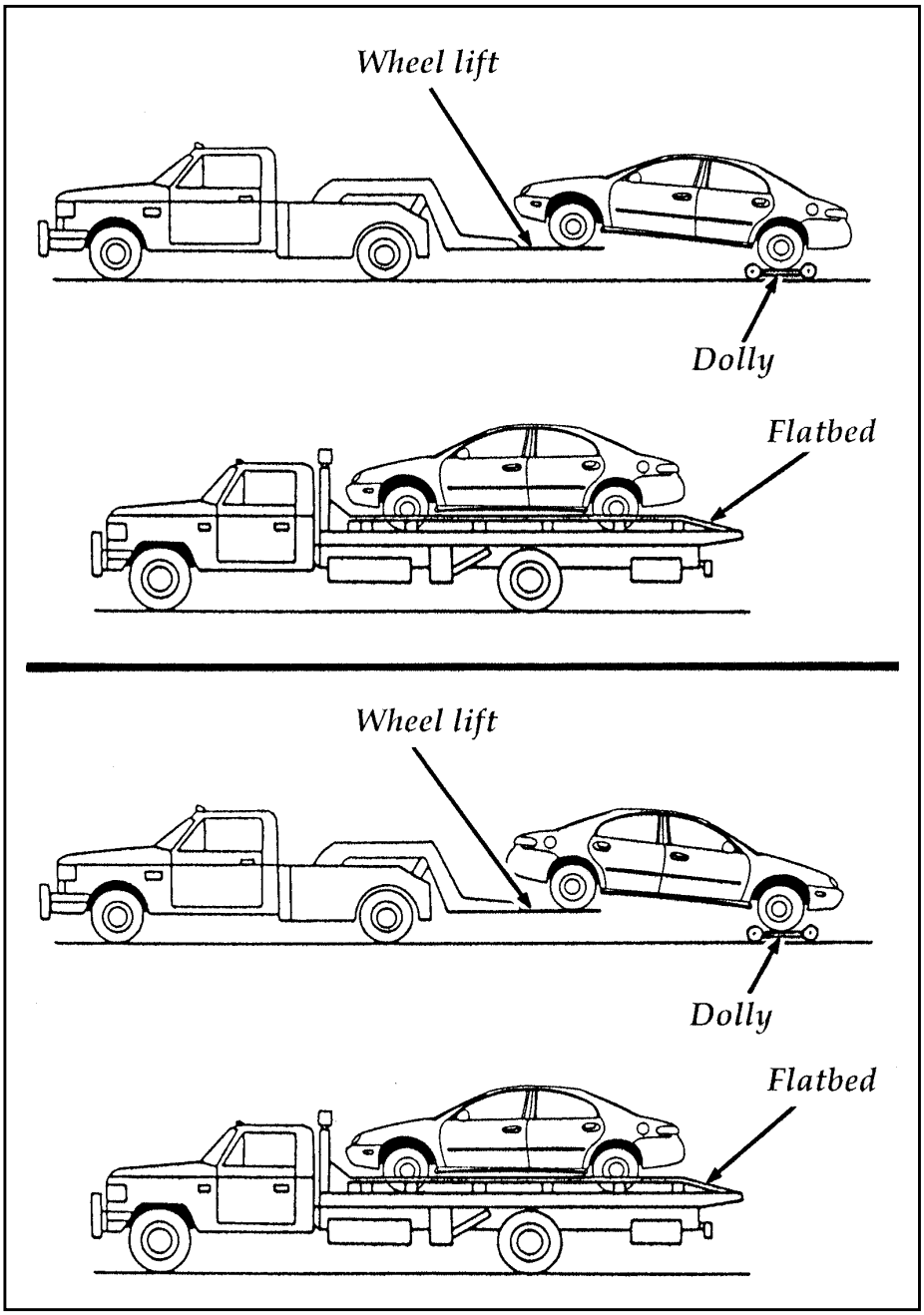

When calling for a tow truck, tell the operator what kind of vehicle you have. A towing manual is available from Ford Motor Company for all authorized tow truck operators. Have your tow truck driver refer to this manual for

Downloaded from www.Manualslib.com manuals search engine

Customer Assistance

Roadside Assistance

Ford Motor Company has set up a 24-hour, seven-day-a-week hotline with trained operators that put you in touch with the help you need if you experience a problem with your vehicle. This complimentary service is provided to you throughout your warranty period of 3 years/36,000 miles (3 years/60,000 km), whichever comes first. To purchase Roadside Assistance coverages beyond this period, through Ford Auto Club, contact your Ford or Lincoln-Mercury dealer (not available in Canada).

Roadside Assistance will cover the following:

- ❑ Mount your spare if you have a flat tire.
- ❑ Jump-start your battery if it is dead.
- ❑ Unlock your vehicle if you are locked out.
- ❑ Bring you fuel if you run out.
- ❑ Tow your vehicle if you are stranded. Even non-warranty related tows, like accidents or getting stuck in mud or snow, are covered (some exclusions apply, such as impound towing and repossession).

Downloaded from www.Manualslib.com manuals search engine

How to use Roadside Assistance

Your Roadside Assistance identification card can be found in the Owner Guide portfolio in your glove compartment. Complete the card and place it in your wallet for quick reference.

To receive roadside assistance in the United States call 1-800-241-FORD (in Canada call 1-800-665-2006).

Should you need to arrange for roadside assistance yourself, Ford Motor Company will reimburse the reasonable cost. To obtain information about reimbursement call 1-800-241-FORD (in Canada call 1-800-665-2006).

If You Have a Service Problem

Ford Motor Company has authorized Ford and Lincoln-Mercury dealerships that can service your vehicle for you. This chapter tells you how to get service or maintenance for your vehicle.

Downloaded from www.Manualslib.com manuals search engine

Service/Maintenance Concerns (U.S. or Canada)

Ford recommends taking your vehicle to your selling dealer who wants to ensure your continued satisfaction. You may, however, take your vehicle to any authorized Ford or Lincoln-Mercury dealer. In most cases, your dealer will be able to resolve your concern.

If you are not satisfied with the service you received from your dealership's service department, talk to the service manager at the dealership, or if you still are not satisfied, talk to the owner or general manager of the dealership. In most cases, you will have your concern resolved at this level.

If you are away from home when your vehicle needs to be serviced, or if you need more help than the dealer gave you, contact the Ford Customer Assistance Center to find an authorized dealership that may be able to help.

Downloaded from www.Manualslib.com manuals search engine

In the U.S., contact:

Ford Motor Company
Customer Assistance Center
300 Renaissance Center
P.O. Box 43360
Detroit, Michigan 48243
1-800-392-3673 (FORD)
TDD for the hearing impaired: 1-800-232-5952

If you live in Canada and have any questions or concerns that the dealership cannot answer, contact the Customer Assistance Centre.

Customer Assistance Centre
Ford Motor Company of Canada, Limited
P.O. Box 2000
Oakville, Ontario L6J 5E4
1-800-565-3673 (FORD)

Please have the following information available when contacting Ford Customer Assistance:

- ❑ your telephone number (both business and home)
- ❑ the name of the dealer and the city where the dealership is located
- ❑ the year and make of your vehicle
- ❑ the date purchased
- ❑ the current mileage on your vehicle
- ❑ your Vehicle Identification Number (VIN)

Downloaded from www.Manualslib.com manuals search engine

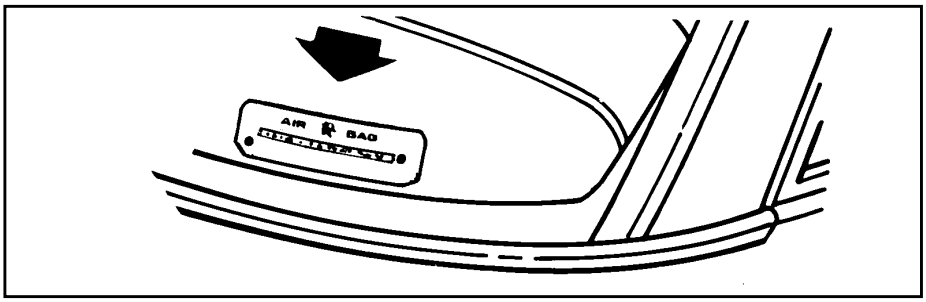

Vehicle Identification Number (VIN/Serial Number)

If you still have a service or product complaint, you may wish to contact the Dispute Settlement Board (U.S. only) or the Canadian Motor Vehicle Arbitration Plan (CAMVAP) in Canada.

The Dispute Settlement Board (U.S. Only)

The Dispute Settlement Board is a voluntary, independent dispute-settlement program available free to owners or lessees of qualifying Ford Motor Company vehicles.

The Dispute Settlement Board may not be available in all states. Ford Motor Company reserves the right to change eligibility limitations, modify procedures and/or to discontinue this process at any time without notice and without incurring obligations.

What Kind of Cases Does the Board Review?

The Board reviews all product performance and service complaints on Ford, Mercury and Lincoln Cars and Ford and Mercury Light Trucks under warranty that have not been resolved by a dealer or Ford Motor Company.

Downloaded from www.Manualslib.com manuals search engine

- ❑ A vehicle sales transaction
- ❑ A request for reimbursement of consequential expenses unless incidental to a service or product complaint being reviewed
- ❑ Items not covered by your warranty
- ❑ Alleged liability claims
- ❑ Property damage where such damage is significant when compared to the economic loss alleged under the warranty dispute
- ❑ Cases currently in litigation
- ❑ Vehicles not used primarily for personal, family, or household purposes

NOTE: Complaints involving vehicles on which applicable express written new vehicle warranties have expired at receipt of your application are not eligible. Eligibility may differ according to state law. For example, see the unique brochure for California purchasers/lessees.

How Does the Board Work?

The Board has four members:

- ❑ three consumer representatives
- ❑ a Ford or Lincoln-Mercury dealer

Consumer candidates for Board membership are recruited and trained by an independent consulting firm. Dealers are chosen because of

Downloaded from www.Manualslib.com manuals search engine

If the involved vehicle is within 36 months and 36,000 miles of the date of delivery (warranty start date), you have a right to make an oral presentation before the Board by indicating your choice on the application. Also, oral presentations may be requested by the Board. A decision is made by the Board by simple majority vote.

Board members review all the materials related to each complaint and, based on the available information, arrive at a fair and impartial decision. Decisions are based on the written statements and any oral presentations made by each of the involved parties.

Because the Board usually meets only once a month, some cases will take longer than 30 days to be reviewed. The Board will make every effort to resolve each case within 40 days after it receives the customer application form.

After your case has been reviewed, the Board will mail you its decision in writing. It will also provide you with a form to indicate your acceptance or rejection of an award decision. The decisions of the Board are binding on the dealer and Ford, but customers may have other options available to them under state or federal law.

The decisions of the Board, however, may be introduced into evidence by any party in subsequent legal proceedings that may be initiated.

How Do You Contact the Board?

Downloaded from www.Manualslib.com manuals search engine

Write to the Board at the following address to

Dispute Settlement Board
P.O. Box 5120
Southfield, MI 48086-5120

What is the Review Process?

Your application will be reviewed and if it is determined to be eligible, you will receive an acknowledgment indicating the file number assigned to your application and the local Board address. At the same time, your dealer and Ford Motor Company representative are asked to submit statements.

To review your case properly, the Board needs the following information:

- ❑ legible copies of all documents and maintenance or repair orders that relate to the case
- ❑ the year, make, model, and vehicle identification number
- ❑ the date you bought your vehicle
- ❑ the date of repair and the mileage at the time of repair
- ❑ the current mileage
- ❑ the name of the dealer who sold you the vehicle or who serviced your vehicle

Downloaded from www.Manualslib.com manuals search engine

- ❑ a brief summary of actions that were taken with the dealer and Ford Motor Company
- ❑ the names (if known) of all people you contacted at the dealership
- ❑ a description of the action you want done to resolve your concern.

Should your application NOT qualify for review, an explanation will be mailed to you.

Reporting Safety Defects (U.S. Only)

If you believe that your vehicle has a defect which could cause a crash or could cause injury or death, you should immediately inform the National Highway Traffic Safety Administration (NHTSA) in addition to notifying Ford Motor Company.

If NHTSA receives similar complaints, it may open an investigation, and if it finds that a safety defect exists in a group of vehicles, it may order a recall and remedy campaign. However, NHTSA cannot become involved in individual problems between you, your dealer, or Ford Motor Company.

To contact NHTSA, you may either call the Auto Safety Hotline toll-free at 1-800-424-9393 (or 366-0123 in the Washington, D.C. area) or write to: NHTSA, U.S. Department of Transportation, 400 Seventh Street, Washington D.C. 20590. You can also obtain other information about motor vehicle safety from the Hotline.

Downloaded from www.Manualslib.com manuals search engine

Ford of Canada Customer Assistance

Ford Motor Company of Canada, Limited

If you live in Canada and have any questions or concerns that the dealership cannot answer, contact the Customer Assistance Centre.

Customer Assistance Centre
Ford Motor Company of Canada, Limited
P.O. Box 2000
Oakville, Ontario L6J 5E4
1-800-565-3673 (FORD)

Canadian Motor Vehicle Arbitration Plan (CAMVAP)

If a specific item of concern arises, where a solution cannot be reached between a vehicle owner, Ford of Canada, and/or one of its dealers (that all parties can agree upon), the owner may wish to use the services offered by the Canadian Motor Vehicle Arbitration Plan (CAMVAP).

CAMVAP uses the services of Provincial Administrators to assist consumers in scheduling and preparing for their arbitration hearings. However, before you can proceed with CAMVAP you must follow your manufacturer's dispute resolution process as outlined under "Service/Maintenance Concerns (U.S. or Canada)" earlier in this chapter.

Downloaded from www.Manualslib.com manuals search engine

Consumers wishing to obtain further information about the program can obtain an information booklet from your dealer or contact the Provincial Administrator, Canadian Motor Vehicle Arbitration Plan, at the address or telephone number shown below.

O & P Services
595 Bay Street — Suite 300
Toronto, Ontario
M5G 2C2
Telephone 1 (800) 207-0685

This plan is not available in the province of Quebec.

Getting Help Outside the U.S. and Canada

Before you export your vehicle to a foreign country, contact the appropriate foreign embassy or consulate to make sure local regulations do not prevent you from registering your vehicle. Officials at the embassy can also help you decide whether you should import your vehicle to that country.

Officials at the embassy or consulate can tell you where to get unleaded fuel. If you cannot get unleaded fuel or can get only fuel with an anti-knock index that is lower than your vehicle needs, contact a district or owner relations office before you leave the U.S. or Canada.

Use of leaded fuel in your vehicle without a proper conversion may damage the effectiveness of your emissions control system and may cause engine knocking or serious engine damage. Ford

Downloaded from www.Manualslib.com manuals search engine

If your vehicle must be serviced while you are traveling or living in Central or South America, the Caribbean, or the Middle East, contact the nearest Ford dealership. If the dealership cannot help you, write to:

Ford Motor Company
Export Operations
1555 Fairlane Drive
Fairlane Business Park #3
Allen Park, Michigan 48101 U.S.A.
Telephone: (313) 317-4282
Fax: (313) 390-0804

If you are in other foreign countries, contact the nearest Ford dealership. If the dealership cannot help you, they can direct you to the appropriate Ford affiliate office.

If you buy your vehicle in North America and then relocate outside of the U.S. or Canada, register your Vehicle Identification Number and new address with Ford Motor Company Export Operations.

Downloaded from www.Manualslib.com manuals search engine

Accessories

Ford Accessories for Your Vehicle

Ford has many fine products available from your dealer to clean your vehicle and protect its finishes. For best results, use the following, or products of equivalent quality:

Ford Custom Clear Coat Polish
Ford Custom Silicone Gloss Polish
Ford Custom Vinyl Protectant
Ford Deluxe Leather and Vinyl Cleaner
Ford Extra Strength Spot and Stain Remover
Ford Extra Strength Tar and Road Oil Remover
Ford Extra Strength Upholstery Cleaner
Ford Extra Strength Whitewall Tire Cleaner
Ford Multi-Purpose Cleaner
Ford Premium Car Wash Concentrate
Ford Triple Clean
Ford Ultra-Clear Spray Glass Cleaner

Downloaded from www.Manualslib.com manuals search engine

A wide selection of accessories is available through your local authorized dealer. These fine accessories have been engineered specifically to fulfill your automotive needs. They are custom designed to complement the style and aerodynamic appearance of your Ford-built vehicle. In addition, each accessory is made from high quality materials and meets or exceeds Ford's rigid engineering and safety specifications. That is why Ford brand accessories are warranted for up to 3 years or 36,000 miles (60,000 km), whichever comes first. See your dealer for complete warranty information and accessory availability.

Safety, Comfort, and Convenience

Travel

Heavy-duty battery
Multi-sport removable rack
- Bike adapter
- Ski/snowboard adapter
- Water sport adapter

Soft luggage cover

Comfort and convenience

Engine block heater
Compact disc radio

Downloaded from www.Manualslib.com manuals search engine

Protection and appearance

Cargo net
Chemicals and paints
Door edge guards
Floor mats
Front-end cover
Mini mask
Molded splash guards (front only)
Remote keyless entry system
Side window deflectors
Super Seal fabric protector (in U.S. only)
Super Seal undercoating (in U.S. only)
Styled wheel protector locks
Trunk mount rack
Vehicle security system
Wheel splash guards (flat)

NOTE: When adding accessories, equipment, passengers, and luggage to your vehicle, do not exceed the total weight capacity of the vehicle or of the front or rear axle (GVWR, GAWR as shown on the Safety Compliance Certification Label). Consult your dealer for specific weight information.

NOTE: The Federal Communications Commission (FCC) or in Canada the Canadian Radio Telecommunications Commission (CRTC) regulates the use of mobile communications systems — such as two-way radios, telephones, and theft alarms — that are equipped with radio transmitters. Any such equipment installed in your vehicle

Downloaded from www.Manualslib.com manuals search engine

NOTE: Mobile communications systems may harm the operation of your vehicle, particularly if they are not properly designed for automotive use or are not properly installed. For example, when operated, such systems may cause the engine to stumble or stall. In addition, such systems may themselves be damaged or their operation affected by operating your vehicle. (Citizens band [CB] transceivers, garage door openers, and other transmitters whose power output is 5 watts or less will not ordinarily affect your vehicle's operation.)

NOTE: Because we have no control over the installation, design, or manufacture of such systems, Ford cannot assume responsibility for any adverse effects or damage that may result if you use this equipment.

Downloaded from www.Manualslib.com manuals search engine

1996 Cougar Owner Manual Order Form

PUBLICATION FORM NO.	DESCRIPTION
FCS-12196-96	1996 Cougar Service Manual
FCS-12106-96	1996 Powertrain Control/ Emission Diagnosis
FCS-12139-96	1996 Car Service Spec. (FWD/RWD)
FCS-12116-96	1996 Cougar Electrical & Vacuum Troubleshooting Manual
93-VID-OM	Ford and the American Dream (50) Minutes of Historic/Nostalgic Videotape

- **NOTE:** For publications prior to year shown above, write for availability to the address shown below.
- Please allow ample time for postal service delivery.

U.S. RESIDENTS

Make checks payable to: HELM, INCORPORATED

MAIL ORDER TO:

HELM, INCORPORATED
P.O. Box 07150
Detroit, Michigan 48207

OR ORDER TOLL FREE:

1-800-782-4356

Monday - Friday 8:00 A.M. - 6:00 P.M. EST
For Credit Card Holder Orders Only

CANADIAN RESIDENTS

Make cheques payable to: Ford Motor Company of Canada, Ltd.

MAIL ORDER TO:

Ford Motor Company of Canada, Ltd.
Service Publications
P.O. Box 1580, Station B
Mississauga, Ontario, Canada L4Y 4G3

OR ORDER TOLL FREE:

1-800-387-4966

Downloaded from www.Manualslib.com manuals search engine

U.S. RESIDENTS USE THIS PAGE

ORDER TOLL FREE
1-800-782-4356

NOTE: For Credit Card Holder Orders Only
Monday-Friday
8:00 A.M.-6:00 P.M. EST

If further information is needed, write to the address shown below or call 1-800-782-4356. Material cannot be returned for credit without receiving advance authorization within 14 days of delivery. On returns, a re-stocking fee may be applied against the original order.

1996

PUBLICATION FORM NUMBER	1996 COUGAR PUBLICATION	QTY.	PRICE EACH	TOTAL PRICE
FCS-12196-96	Cougar SM		$ 75.00	
FCS-12106-96	Powertrain Control/ED		160.00	
FCS-12139-96	Car Service Spec. (FWD/RWD)		32.00	
FCS-12116-96	Cougar EVTM		32.00	
93-VID-OM	Videotape		19.95	

TOTAL MATERIAL	
Michigan Purchasers add 6% sales tax	
Handling Charge	$4.00
GRAND TOTAL	

PAYMENT

☐ Check or Money Order payable to Helm, Inc. (USA funds only – do not send cash.)

☐ MasterCard

☐ VISA ☐ Discover

Account Number ☐☐☐☐ ☐☐☐☐ ☐☐☐☐ ☐☐☐☐

Expiration Date mo/yr: ☐☐ ☐☐

☐ Check here if billing address is different from shipping address shown.

(CUSTOMER SIGNATURE) (DATE)

SHIP

NOTE: Dealers and Companies please provide dealer or company name, along with the name of the person to whom the shipment should be sent. For purchases outside U.S.A. and Canada, please write to the following address for quotation. Mail completed order form to: HELM, INC • P.O. Box 07150 • Detroit, MI 48207. Please allow 6-8 weeks for delivery. Prices are subject to change without notice and without incurring obligation.

(CUSTOMER NAME) (ATTENTION)

(STREET ADDRESS - NO P.O. BOX NUMBERS) (APT.NO.)

(CITY) (STATE) (ZIP CODE)

Downloaded from www.Manualslib.com manuals search engine

CANADIAN RESIDENTS USE THIS PAGE

ORDER TOLL FREE
1-800-387-4966

NOTE: For Credit Card Holder Orders Only
Monday-Friday
8:30 A.M.-6:00 P.M. EST

If further information is needed, write to the address shown below or call 1-800-387-4966. Material cannot be returned for credit without receiving advance authorization within 14 days of delivery. On returns, a re-stocking fee may be applied against the original order.

1996

PUBLICATION FORM NUMBER	1996 COUGAR PUBLICATION	QTY.	PRICE EACH	TOTAL PRICE
FCS-12196-96	Service Manual		$ 76.00	
FCS-12106-96	Powertrain Control/ED		160.00	
FCS-12139-96	Car Service Spec. (FWD/RWD)		39.00	
FCS-12116-96	Electrical & Vacuum T.M.		47.00	

TOTAL MATERIAL	
G.S.T. (7%)	
Handling/Shipping Charge Individual Item Order Except Service Manuals $5.00 OR Service Manuals and Multiple Item Orders $10.00 (French Owner Guide: No Charge)	
GRAND TOTAL	

PAYMENT

☐ Cheques or Money Order payable to Ford Motor Company of Canada, Ltd. (Do not send cash.)

☐ VISA Only

Account Number ☐☐☐☐ ☐☐☐☐ ☐☐☐☐ ☐☐☐☐

Expiration Date mo/yr: ☐☐ ☐☐

☐ Check here if billing address is different from shipping address shown.

(CUSTOMER SIGNATURE) (DATE)

SHIP

NOTE: Dealers and Companies please provide dealer or company name, along with the name of the person to whom the shipment should be sent. Mail completed order form to: Ford Motor Company of Canada, Ltd. • Service Publications • P.O. Box 1580, Station B Mississauga, Ontario, Canada L4Y 4G3. Please allow 6-8 weeks for delivery. Prices are subject to change without notice and without incurring obligation.

(CUSTOMER NAME) (ATTENTION)

(STREET ADDRESS - NO P.O. BOX NUMBERS) (APT.NO.)

(CITY) (PROVINCE) (POSTAL CODE)

Downloaded from www.Manualslib.com manuals search engine

MERCURY

Registered Key Ring

For that special look, Mercury is now able to offer you a unique key ring. This key ring beats the distinguished Mercury logo, as well as being registered on the reverse side to facilitate its return should it ever become lost. If lost, your keys will be mailed back to you.

Once the registration card has been filled out and returned to us, your name, address and registration number will be kept on file. Should you lose your key ring, all the finder has to do is drop it in any mail box, which will in turn be forwarded on to you.

To order a Mercury key ring, simply fill out the order form below, or call our toll-free number, 1-800-735-0482. Please enclose payment of $5.00 (available in the United States only) for each key ring ordered (checks, money orders and Visa or MasterCard are accepted; please no cash or CODs). Michigan residents add 6% Sales Tax.

Make checks payable to Mercury Key Ring Headquarters.

Please send_____Key Ring(s)

at $5.00 each $ _____

MI Residents add 6% $ _____

Total $ _____

Enclosed is my Check ☐ or bill my ☐ Visa ☐ MasterCard

MAIL TO:
Mercury Key Ring Headquarters
P.O. Box 760546
Lathrup Village, MI 48076

Allow 2-3 weeks for delivery.

Credit Card Account Number ☐☐☐☐ ☐☐☐☐ ☐☐☐☐ ☐☐☐☐

Expiration Date_____

SHIP TO:

Name _____

Address _____

Downloaded from www.Manualslib.com manuals search engine

Servicing Your Cougar

Service Made Easy

Ford has two goals for servicing your vehicle.

1. When we can, we design parts that do not need to be serviced.

2. We want to make servicing your vehicle as easy as possible. To help you:

- ❑ We highlight do-it-yourself items in yellow in the engine compartment so that you can find them easily.

- ❑ When possible, we design parts — such as the headlamp bulbs — that can be replaced without tools.

- ❑ We give you a Maintenance Schedule that makes tracking routine service for your vehicle easy. The maintenance schedule is located in the *Maintenance Schedule and Record* booklet.

This chapter tells you about the basic parts that you need to check and service regularly.

If your vehicle needs professional servicing, your dealership can provide the parts and service required. Check your *Warranty Information Booklet* to find out which parts and services are covered. Also see the *Customer Assistance* chapter of this

Downloaded from www.Manualslib.com manuals search engine

Ford Motor Company recommends that the Owner Maintenance Checks listed in the *Maintenance Schedule and Record* booklet be performed for the proper operation of your vehicle. In addition to the conditions listed in the *Owner Maintenance Checklist*, be alert for any unusual noise, vibration, or other indication that your vehicle may need service. If you do notice something unusual, see that your vehicle is serviced promptly.

Use only recommended fuels, lubricants, fluids, and service parts conforming to Ford specifications. Motorcraft parts are designed and built to provide the best performance in your vehicle. Using these parts for replacement is your assurance that Ford-built quality stays in your vehicle.

NOTE: Always dispose of used automotive fluids in a responsible manner. Follow your community's standards for disposing of these types of fluids. Call your local recycling center to find out about recycling automotive fluids.

Precautions When Servicing Your Vehicle

Be especially careful when inspecting or servicing your vehicle. Here are some general precautions for your safety:

- ❑ Do not work on a hot engine. The engine cooling fan may come on unexpectedly. Always turn the engine off and let it cool.

Downloaded from www.Manualslib.com manuals search engine

⚠WARNING

The cooling fan is automatic and may come on at any time. Always disconnect the negative terminal of the battery before working near the fan.

- ❑ If you must work with the engine running, avoid wearing loose clothing or jewelry that could get caught in moving parts. Take appropriate precautions with long hair.
- ❑ Do not work on a vehicle in an enclosed space with the engine running, unless you are sure you have enough ventilation.
- ❑ Never get under a vehicle while it is supported by a jack only. If you must work under a vehicle, use safety stands.
- ❑ Keep all lit cigarettes and other smoking materials away from the battery and all fuel-related parts.

If you disconnect the battery, the engine must "relearn" its idle conditions before your vehicle will drive properly. To find out how the engine does this, see *Battery* in this chapter.

Working with the engine off:

1. Set the parking brake fully and make sure that the gearshift is securely latched in P (Park).
2. Remove the key from the ignition after you turn the engine off.

Downloaded from www.Manualslib.com manuals search engine

Working with the engine on:

1. Set the parking brake fully and make sure that the gearshift is securely latched in P (Park).

2. Block the wheels. This will prevent your vehicle from moving unexpectedly.

⚠WARNING
Do not start your engine with the air cleaner removed and do not remove it while the engine is running.

Opening the Hood

1. Inside the vehicle, pull the hood release located under the lower left corner of the instrument panel.

2. Go around to the front of the vehicle, and release the auxiliary catch that is located under the front edge of the hood at the center of the vehicle.

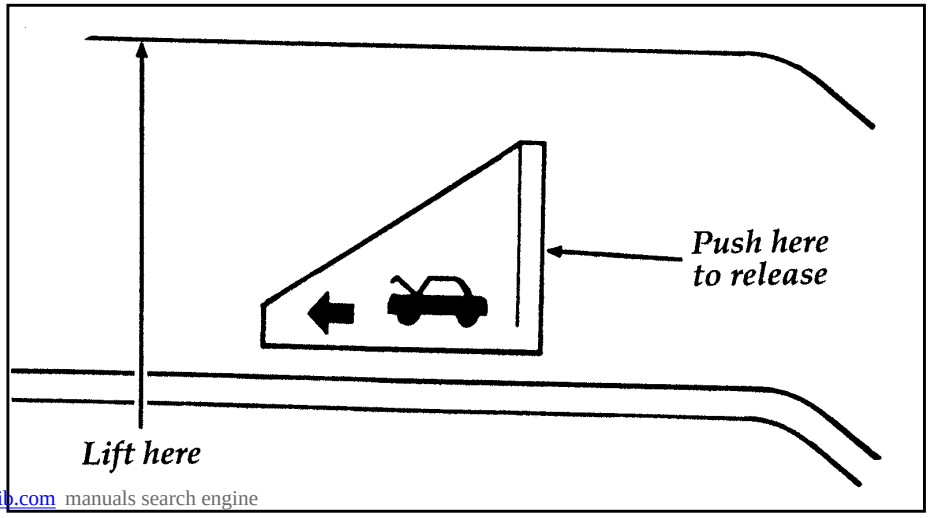

Downloaded from www.Manualslib.com manuals search engine

Whenever you close the hood, latch it securely.

NOTE: Apply lubricant to the hood latch at six-month intervals to maintain smooth and trouble-free operation.

Engine Compartment

Your vehicle has one of these types of engines:

- ❑ a 4.6 liter SFI engine
- ❑ a 3.8 liter SFI engine

The following pages show diagrams of each engine type and where to find items that you should regularly service.

Downloaded from www.Manualslib.com manuals search engine

Downloaded from www.Manualslib.com manuals search engine

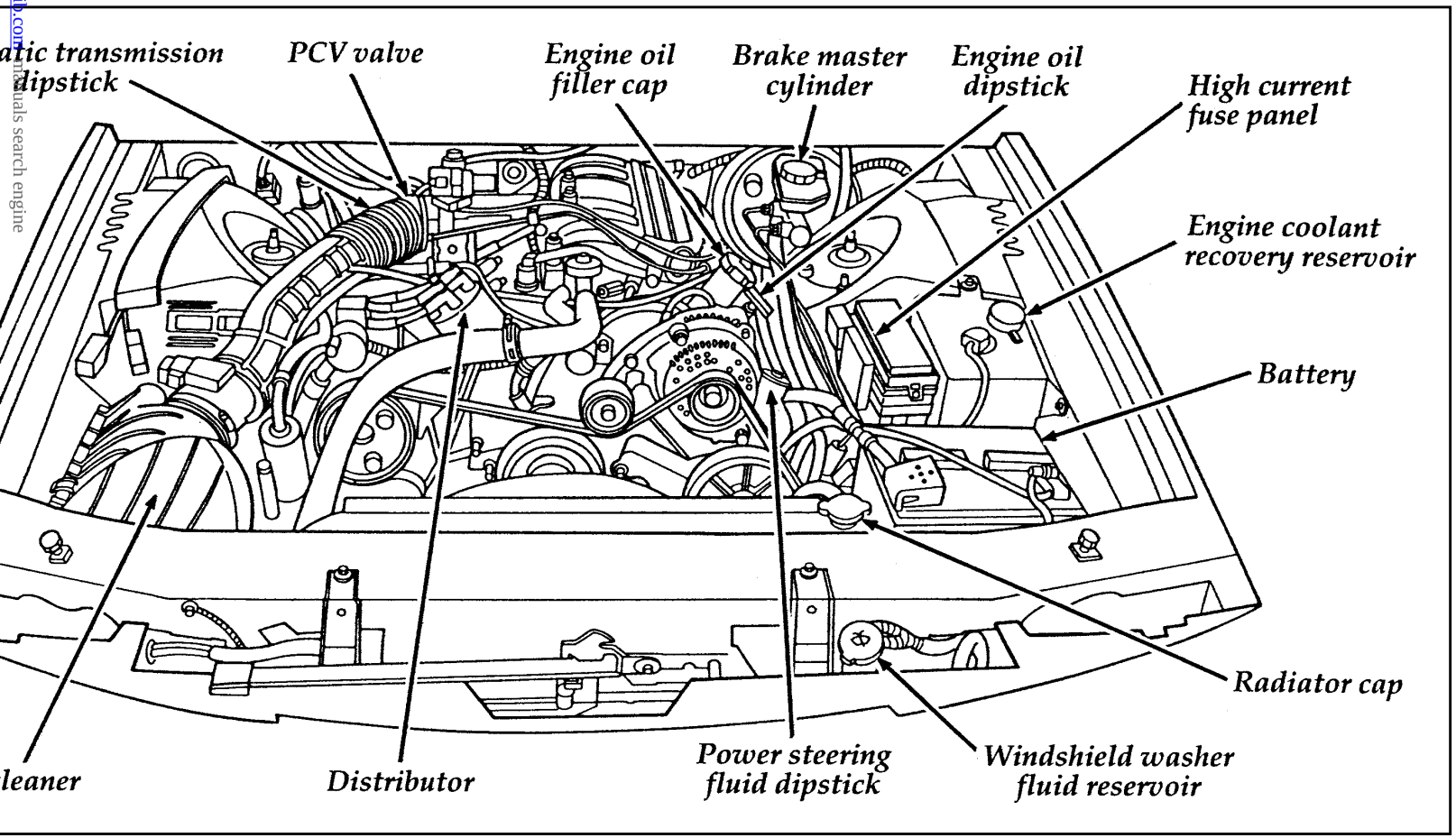

Downloaded from www.Manualslib.com manuals search engine

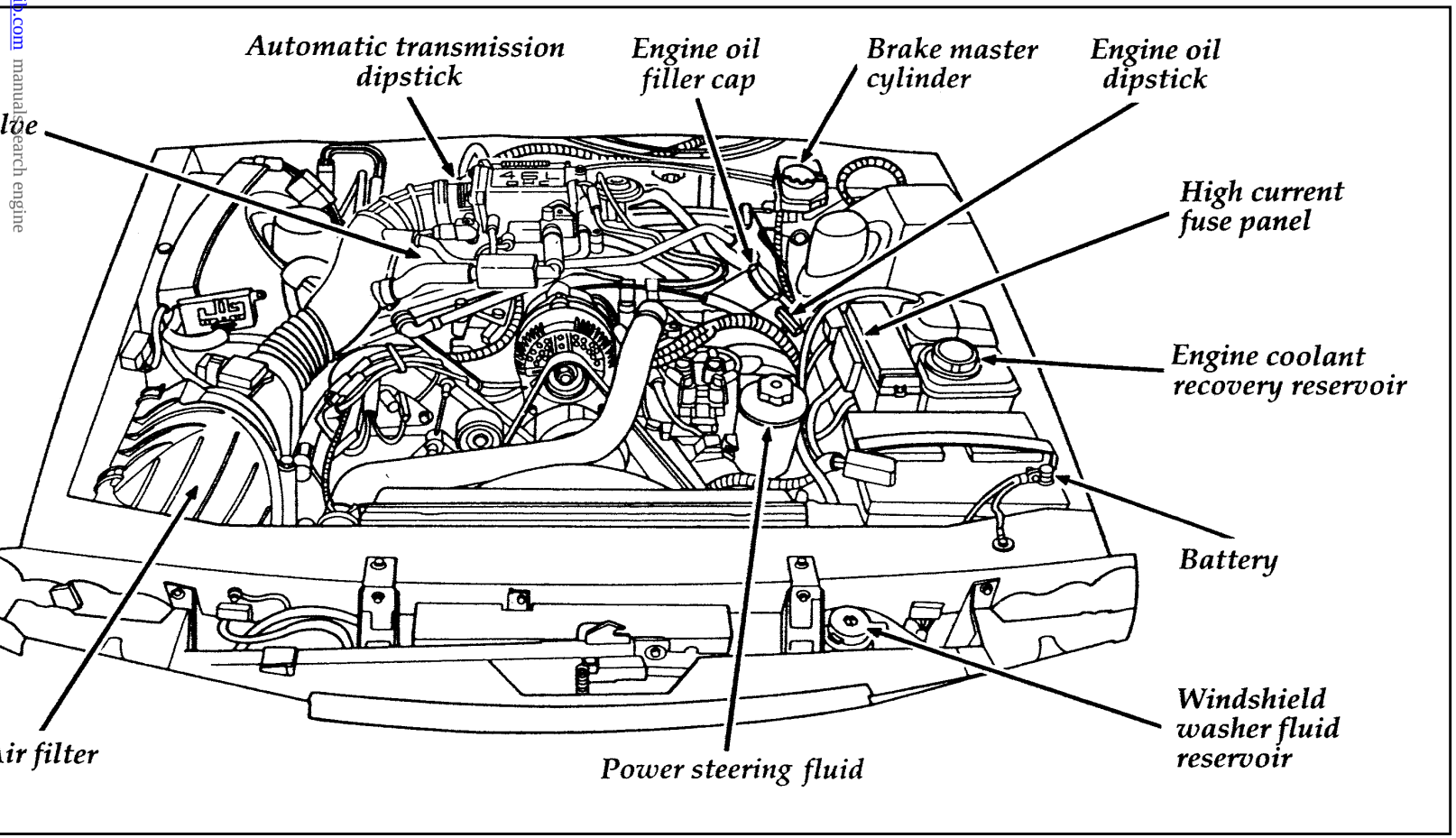

Cleaning the Engine

A clean engine is more efficient because a buildup of grease and dirt acts as an insulator, keeping the engine warmer than usual.

- ❑ Extreme care must be used if a power washer is used to clean the engine. The high pressure fluid could penetrate sealed parts and assemblies causing damage or malfunctions.
- ❑ In order to avoid possible cracking of the engine block or fuel injection pump, do not spray a hot engine or injection pump with cold water.
- ❑ The alternator, distributor and air intake must be covered. Covering these components will help prevent water damage.
- ❑ Never wash or rinse the engine while it is running. Water getting into the engine may cause internal damage.

Filling the Fuel Tank

The fuel door is outside the car on the passenger side near the back. To fill the fuel tank:

1. After opening the fuel filler door, remove the cap carefully and slowly by turning it counterclockwise 1/2 to 3/4 turn.

⚠WARNING

The fuel system may be under pressure. If the fuel cap is venting vapor or if you hear a hissing sound while disengaging

Downloaded from www.Manualslib.com manuals search engine

2. Put the nozzle all the way inside the fuel filler pipe before pumping the fuel.

NOTE: If you spill any fuel on the body of your vehicle, clean it off immediately. The fuel may dull or soften the paint if you do not wash it off.

3. Replace the fuel cap completely when you are finished. Turn it clockwise 1/4 turn until it is tight. It will click when it is fully tightened.

4. Push the fuel door closed.

⚠WARNING
If you lose the fuel cap, replace it with a Motorcraft or equivalent fuel cap. If you do not use the proper fuel cap, the pressure in the fuel tank can damage the fuel system or cause it to work improperly in a collision, endangering you and your passengers.

NOTE: If you replace your fuel cap with an aftermarket fuel filler cap, the customer warranty may be void for any damage to the fuel tank and/or fuel system.

Choosing the Right Fuel

Use only UNLEADED FUEL in your vehicle. Using leaded fuel is prohibited by federal law. Your warranty may not apply if your vehicle is damaged because you used the wrong fuel.

Using a high-quality fuel makes your vehicle

Downloaded from www.Manualslib.com manuals search engine

Octane recommendations

Your engine is designed to use fuel with an octane rating of 87. In most cases it is not necessary to use a fuel with an octane rating higher than 87. At service stations, the octane rating is displayed in a label on the pumps.

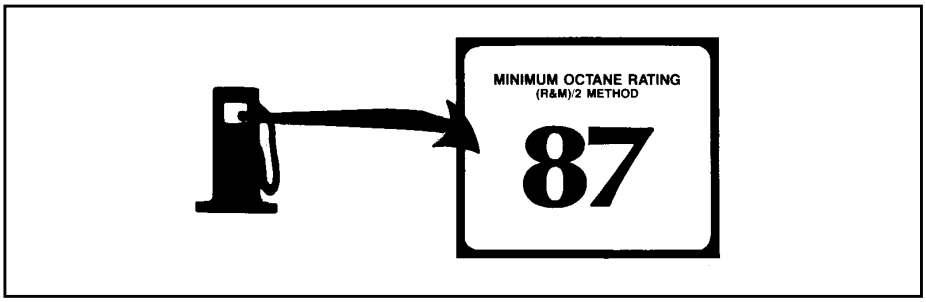

Using a fuel with a lower octane rating can cause persistent and heavy knocking, which can damage the engine.

Do not be concerned if your vehicle sometimes knocks lightly when you drive up a hill or when you accelerate. However, see your dealer or a qualified service technician if persistent heavy knocking occurs because this can damage the engine.

If your vehicle has problems with starting, rough idle or hesitation problems when the engine is cold, it may be caused by fuel with low volatility. Try a different brand of fuel. If the condition persists, see your dealer or a qualified service technician.

Gasolines for clean air

Fuels in certain areas of the country are required to contain oxygenates to improve air quality. Common oxygenates are ethanol or grain alcohol

Downloaded from www.Manualslib.com manuals search engine

Reformulated gasoline is also required in certain areas of the U.S. These fuels are designed to further reduce emissions from your vehicle.

Generally, you should not experience difficulties operating your vehicle on fuels containing oxygenates. We encourage you to use these fuels.

Safety Information Relating to Automotive Fuels

⚠WARNING

Automotive fuels can cause serious injury or death if misused or mishandled. To minimize the risk that you will be injured, please read the following information carefully and observe the recommended precautions.

- ❑ Turn vehicle off when refueling
- ❑ Do not smoke when refueling. Fuels are extremely flammable.
- ❑ Do not siphon any fuel by mouth.

⚠WARNING

Gasoline or gasoline blended with methanol can cause blindness and possible death when swallowed. If any fuel is swallowed, call a physician or poison control center immediately.

- ❑ Avoid breathing vapors while refueling.
- ❑ If fuel is splashed on the skin, wash with

Downloaded from www.Manualslib.com manuals search engine

Gasoline and gasoline blends may contain small amounts of carcinogens, such as benzene. Long-term exposure to unleaded gasoline vapors has caused cancer in laboratory animals.

If you are taking the medication “Antabuse” or other forms of disulfiram for the treatment of alcoholism, vapor or skin contact with a gasoline-methanol blend may cause the same kind of adverse reaction as drinking an alcoholic beverage. In sensitive individuals, serious personal injury or sickness could result. Consult a physician promptly if you experience an adverse reaction.

Running Out of Fuel

NOTE: Avoid running out of fuel because this situation may have an adverse effect on modern powertrain components.

You may need to crank the engine several times before the fuel system starts to pump fuel from the tank to the engine.

Calculating Fuel Economy

Fuel economy is an estimate of the efficiency of your vehicle, and can be calculated as Miles Per Gallon (MPG) or Liters Per 100 Kilometers (L/100K).

Do not calculate fuel economy during your vehicle’s break-in period. This would not be an accurate estimate of how much fuel your vehicle will normally use.

To calculate fuel economy:

Downloaded from www.Manualslib.com manuals search engine

3. After at least 3-5 tankfuls, fill the fuel tank and record the final odometer reading.

4. Use these equations to calculate your fuel economy:

- ❑ English: MPG = (Total miles driven) ÷ (gallons used)
- ❑ Metric: L/100k = (liters used) ÷ (100 kilometers)

Comparisons With EPA Estimates

EPA fuel economy figures are obtained from laboratory tests under simulated road conditions and may not reflect the actual conditions you experience or your style of driving. The EPA fuel economy estimate is not a guarantee that you will achieve the fuel economy shown.

The following decrease fuel economy:

- ❑ Lack of regular, scheduled maintenance
- ❑ Rapid acceleration and excessive speed
- ❑ Driving with your foot on the brake
- ❑ Sudden stops
- ❑ Extended engine idling
- ❑ Using speed control in hilly terrain
- ❑ Extended use of the A/C, defroster, rear window defroster and other accessories
- ❑ Underinflated tires

Downloaded from www.Manualslib.com manuals search engine

Self-Service Pointers

If you choose to do your own fueling, you should also perform a few simple maintenance routines. This extra effort will save you additional money and contribute to the driving efficiency of your vehicle.

The following procedures require only a tire gauge, a rag, an oil can spout and windshield washer fluid.

- ❑ Check the engine oil at every refueling stop
- ❑ Clean the windshield, outside mirrors and headlights
- ❑ Check windshield washer fluid
- ❑ Check tires for excessive wear or worn edges
- ❑ Check the tire pressure at least monthly

Engine Oil Recommendations

We recommend using Motorcraft oil or an equivalent oil meeting Ford Specification ESE-M2C153-E and displaying the American Petroleum Institute CERTIFICATION MARK on the front of the container.

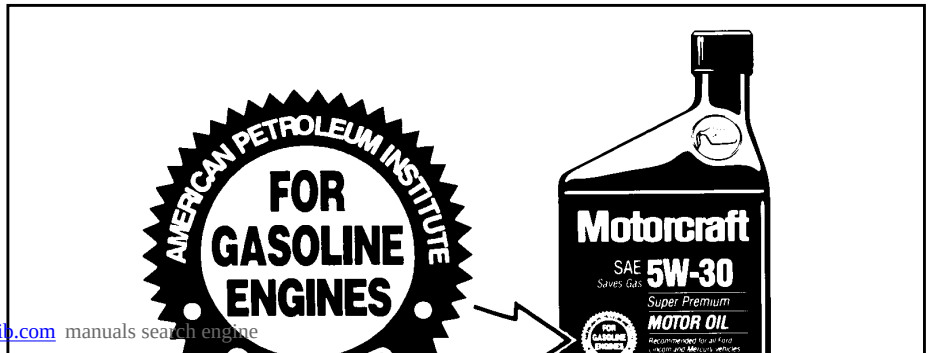

Downloaded from www.Manualslib.com manuals search engine

Never use:

- ❑ "Non-Detergent" oils
- ❑ Oils labeled API SA, SB, SC, SD, SE, SF or SG
- ❑ Additional engine oil additives, oil treatments or engine treatments

Engine oils with an **SAE 5W-30** viscosity are **PREFERRED** for your vehicle. They provide the best engine performance, fuel economy and engine protection for all climates down to -15˚F (-25˚C).

Synthetic engine oils which are CERTIFIED and of the preferred viscosity may be used in your engine. The engine oil and oil filter must still be changed according to the maintenance schedule.

Checking and Adding Engine Oil

Since the proper amount of engine oil is important for safe engine operation, check the oil using the dipstick each time you put fuel in your vehicle. Remember the engine must be off, the oil must be warm and the vehicle must be parked on level ground.

Checking the engine oil level:

1. Turn the engine off after it has warmed up and allow a few minutes for the engine oil to drain back into the oil pan.
2. Set the parking brake, making sure the gearshift is securely latched in P (Park).
3. Open the hood. Protect yourself from engine

Downloaded from www.Manualslib.com manuals search engine

5. Wipe the dipstick clean and put it back into position, making sure it is fully seated.

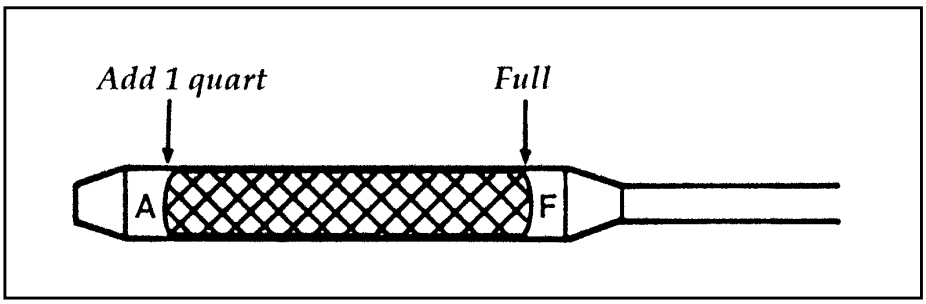

Engine oil dipstick — 4.6 liter engines

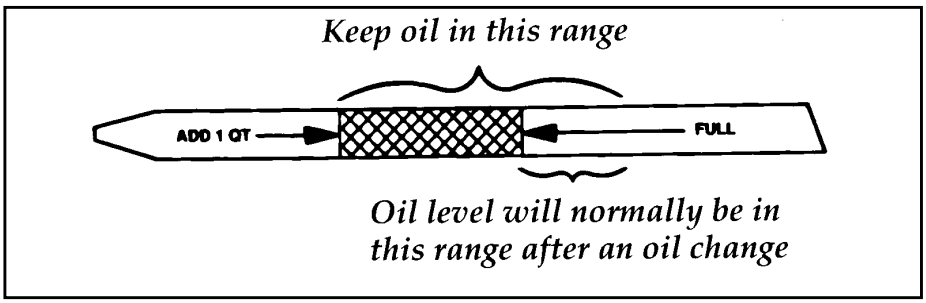

Engine oil dipstick — 3.8 liter engines

6. Carefully, pull the dipstick out again. If the oil level is below the "ADD 1 QT" line, add engine oil as necessary. If the oil level is beyond the letter "F" in Full, engine damage or high oil consumption may occur and some oil must be removed from the engine.

7. Put the dipstick back in and make sure it is fully seated.

It may be necessary to add some oil between oil changes. Make sure you use a CERTIFIED engine oil of the preferred viscosity. Your vehicle's warranty coverage may not apply if engine damage is caused by the use of improper engine oil.

Downloaded from www.Manualslib.com manuals search engine

Changing the Engine Oil and the Oil Filter

Change the engine oil and oil filter per the following, whichever occurs first.

5,000 MILES (8,000 KM) OR 6 MONTHS NORMAL SCHEDULE
3,000 MILES (5,000 KM) OR 3 MONTHS SEVERE DUTY SCHEDULE EXTENSIVE IDLING TRAILER TOWING DRIVING IN SEVERE DUST POLICE, TAXI, OR DELIVERY

Refer to the *Maintenance Schedule and Record* booklet for additional information.

NOTE: Always dispose of used automotive fluids in a responsible manner. Follow your community's standards for disposing of these types of fluids. Call your local recycling center to find out about recycling automotive fluids.

⚠WARNING
Continuous contact with USED motor oil has caused cancer in laboratory mice.

Protect your skin by washing with soap and water.

Downloaded from www.Manualslib.com manuals search engine

Engine Coolant

Checking the Engine Coolant

NOTE: Be sure to read and understand *Precautions When Servicing Your Vehicle* at the beginning of this chapter.

⚠WARNING
The cooling fan is automatic and may come on at any time. Always disconnect the negative terminal of the battery before working near the fan.

Your vehicle's coolant protects your engine from overheating in the summer and from freezing in the winter. Check the level of the coolant at least once a month. Simply look at the engine coolant reservoir located in the engine compartment. To locate the reservoir, see the diagram of your vehicle's engine under *Engine Type*, in this chapter.

The coolant additives also protect the entire cooling system from internal passageway corrosion and these additives lubricate the water pump. The coolant should be serviced as noted in the *Maintenance Schedule and Record* booklet.

Downloaded from www.Manualslib.com manuals search engine

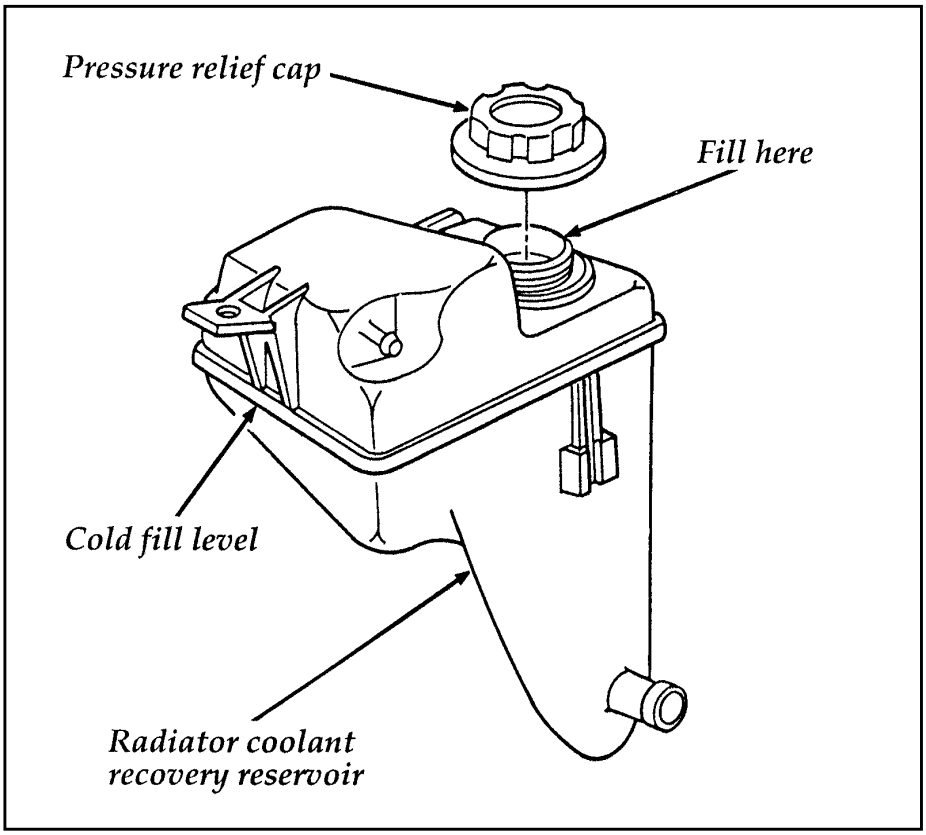

The engine coolant recovery reservoir

Checking hoses

Inspect all engine and heater system hoses and hose connections for deterioration, leaks, and loose hose clamps as specified in the *Maintenance Schedule and Record* booklet. Repair or replace with Motorcraft hoses or equivalent as necessary.

Adding engine coolant

⚠WARNING

Do not put engine coolant in the container for the windshield washer fluid.

If sprayed to clean the glass, engine coolant or

Downloaded from www.Manualslib.com manuals search engine

⚠WARNING
Never remove the radiator cap or vent plug while the engine is running or hot.

Follow these steps to avoid personal injury that can be caused by escaping steam or engine coolant.

1. Before you remove the cap, turn the engine off and let it cool. Even when the engine is cool, be careful when you remove the radiator cap or vent plug.
2. When the engine is cool, wrap a thick towel around the cap and turn it slowly counterclockwise to unscrew.
3. Step back while the pressure releases.
4. When you are sure that all the pressure has been released, use the cloth to press the cap down, turn it, and remove it.
5. Stand away from the radiator opening. Hot steam may blow out or hot engine coolant may even splash out.

To find out how much engine coolant mixture your vehicle's coolant system can hold, see *Refill capacities for fluids* in the Index.

Add engine coolant only to the recovery reservoir. If the coolant level is low, add a 50/50 or appropriate mixture of water and the type of engine coolant that Ford specifies. You may add water by itself only in an emergency, but you should replace it with a 50/50 or appropriate mixture as soon as possible.

Downloaded from www.Manualslib.com manuals search engine

Ford Premium Cooling System Fluid is an optimized formula that will protect all metals and rubber elastomers used in Ford engines for four years or 50,000 miles (80,000 km). It is not necessary and not recommended to use supplemental coolant additives in your gasoline powered vehicle. These additives may harm your engine cooling system. Follow the recommended service interval for changing your engine coolant.

NOTE: When you change or add engine coolant, it is important to maintain your engine coolant concentration between 40% (-11˚F [-24˚C]) and 60% (-62˚F [-52˚C]), depending on your local climate conditions. Below 40% you will lose freeze protection and above 60% your engine may overheat on a warm day.

NOTE: The use of an improper coolant may void your warranty for the engine cooling system. Use only a premium nationally recognized brand name engine coolant. Do not use alcohol, methanol antifreeze or engine coolant mixed with alcohol or methanol antifreeze. If you do not use the proper coolant, the aluminum radiator on your vehicle will corrode.

Ford Motor Company expressly authorizes the Ford Rotunda engine coolant recycling process and chemicals. Use only Ford Rotunda recycled engine coolant or an equivalent recycled engine coolant that is certified by the supplier to meet

Downloaded from www.Manualslib.com manuals search engine

NOTE: Always dispose of used automotive fluids in a responsible manner. Follow your community's standards for disposing of these types of fluids. Call your local recycling center to find out about recycling automotive fluids.

Use Ford Premium Cooling System Fluid E2FZ-19549-AA (in Canada, Motorcraft CXC-8-B) or an equivalent engine coolant that meets Ford Specification ESE-M97B44-A.

Leave the engine coolant in all year. Make sure that the coolant will not freeze at the temperature level in which you drive during winter months. Keep a mixture of engine coolant in your engine that has a protection rating of at least -34˚F (-37˚C), or whatever protection rating is appropriate for the climate in which you live.

Engine coolant drain and flush

Proper procedures for a complete coolant drain and flush of the cooling system can be found in the *Car Service Manual*. Following these recommended procedures will ensure that the specified coolant level and a 50/50 or appropriate mixture of coolant and water is maintained.

Engine coolant refill procedure

When the entire cooling system is drained and refilled, the following procedure should be used to ensure a complete fill:

NOTE: It is imperative the following procedure be adhered to. Failure to do

Downloaded from www.Manualslib.com manuals search engine

3.8L engine only

- ❑ Open the vent plug.
- ❑ Remove coolant recovery reservoir cap.
- ❑ Remove radiator pressure cap.
- ❑ With the engine off and cool, add a 50/50 mixture of recommended cooling system fluid and water to the radiator until full, then add to the reservoir until the reservoir is at the FULL-HOT level.
- ❑ Close the vent plug.
- ❑ Reinstall the coolant recovery reservoir cap by installing the cap to the fully installed position.
- ❑ Reinstall the pressure cap to the pressure relief position by installing the cap to the fully installed position, and then backing off to the first stop.
- ❑ Start and idle engine until the radiator upper hose is warm (this indicates the thermostat is open and coolant is flowing through the entire system).
- ❑ Immediately shut off engine. Cover cap completely with a thick cloth and cautiously remove radiator pressure cap and add a 50/50 mixture of recommended coolant and water until system is full.
- ❑ Reinstall the radiator cap securely.
- ❑ Remove the cap from the engine coolant recovery reservoir and add a 50/50 mixture of recommended cooling system fluid and

Downloaded from www.Manualslib.com manuals search engine

- ❑ Check for leaks at the draincock, block plug and vent plug.
- ❑ Recheck the engine coolant level, using the recommended procedure, after one or two occasions of vehicle use.

4.6L engine only

- ❑ With the engine OFF and cool, remove the pressure cap, located on the coolant reservoir. Remove the heater hose and clamp, located on the rear of the intake manifold.
- ❑ Add a 50/50 mixture of specified coolant and water to the coolant reservoir. Refer to *Refill Capacities* later in this chapter for the correct amount. Add coolant to the reservoir until the coolant continuously flows out of the tube in the rear of engine. Reattach hose and secure clamp.
- ❑ Continue to fill the reservoir until the coolant is at the FULL COLD level.
- ❑ Reinstall the pressure cap to the fully installed position.
- ❑ Start and idle the engine until the radiator upper hose is warm (this indicates the thermostat is open and coolant is flowing through the entire system).
- ❑ Immediately shut off the engine and let cool. Cautiously remove the pressure relief cap and add a 50/50 mixture of specified coolant and water until the coolant is at the COLD FILL level in the coolant reservoir.

Downloaded from www.Manualslib.com manuals search engine

- ❑ Check for leaks at the draincock.
- ❑ Recheck the engine coolant level, using the recommended procedure, after one or two occasions of vehicle use.

Battery

Your vehicle may have a Motorcraft maintenance-free battery. When the original equipment battery is replaced under warranty, it may be replaced by a Motorcraft Low-Maintenance Battery.

The Low-Maintenance Battery has removable vent caps for checking the electrolyte level and for adding water, if necessary. The electrolyte level should be checked at least every 24 months or 24,000 miles (40 000 km) in temperatures up to 90˚F (32˚C) and more often in temperatures above 90˚F (32˚C). Keep the electrolyte level in each cell up to the level indicator. Do not overfill.

If the level gets low, you can add tap water to the battery, provided the water isn't hard or doesn't have a high mineral or alkali content. However, if possible you should refill the battery with distilled water. If the battery needs water quite often, have the charging system checked for a possible malfunction.

Downloaded from www.Manualslib.com manuals search engine

Help Us Protect Our Environment

Ford Motor Company strongly recommends that used lead-acid batteries be returned to an authorized recycling facility for disposal.

Battery recycling symbol

Because your vehicle's engine is electronically controlled by a computer, some control conditions are maintained by power from the battery. If you ever disconnect the battery or install a new battery, you must allow the computer to "relearn" its idle conditions before your vehicle will drive properly. To let the engine do this, put the gearshift in P (Park), turn off all the accessories, and start the vehicle. Let the engine idle for at least one minute. (Engine must be warm in order to "learn.") Also, allow approximately 10 miles (16 km) of stop and go traffic for your vehicle's engine to completely "relearn" its idle.

NOTE: If your vehicle is equipped with a 4.6L engine you will need to perform additional steps after the battery has been disconnected, jump started or replaced. See *Readiness for Inspection/Maintenance Testing* in Servicing Your Vehicle chapter.

Downloaded from www.Manualslib.com manuals search engine

Windshield Washer Fluid and Wipers

Washer Fluid

Check the level of the windshield washer fluid periodically, or when the optional lamp indicates low fluid. The reservoir for washer fluid is located on the driver's side of the engine compartment. Visual inspection can determine if the washer fluid is adequate. Do not operate the washer when the reservoir is empty.

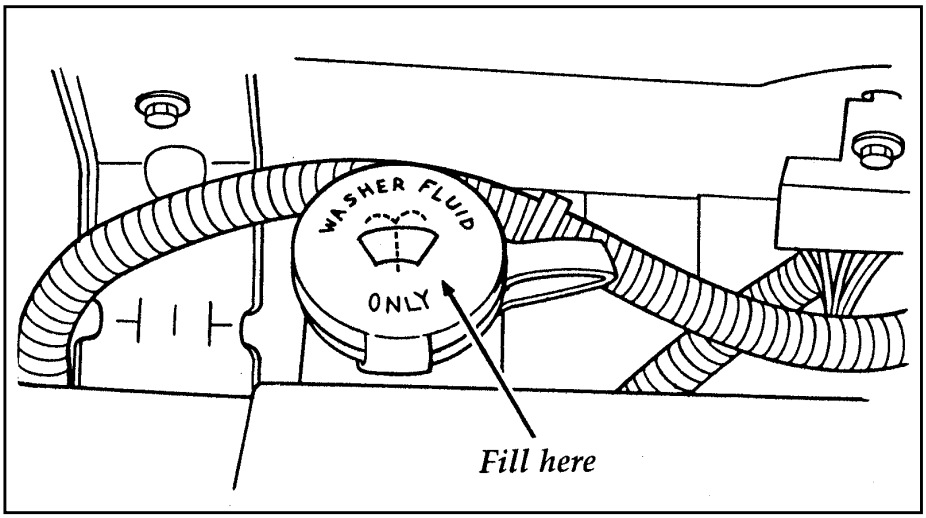

The reservoir for the windshield washer fluid

⚠WARNING
Do not put windshield washer fluid in the container for the engine coolant.

Use specially formulated windshield washer fluid rather than plain water, because specially formulated washer fluids contain additives that dissolve road grime. For safety reasons, washer fluids containing an appropriate antifreeze such

Downloaded from www.Manualslib.com manuals search engine

non-methanol antifreeze agents should be used only if they provide cold weather protection without damaging the vehicle's paint finish, wiper blades, and windshield washer system.

Wiper Blades

Check the windshield wiper blades at least twice a year. Also check them whenever they seem less effective than usual. Substances such as tree sap and some hot wax treatments used by commercial car washes reduce the effectiveness of wiper blades.

If the blades do not wipe properly, clean both the windshield and the wiper blades. Use undiluted windshield washer solution or a mild detergent. Rinse thoroughly with clear water. Do not use fuel, kerosene, paint thinner, or other solvents to clean your wiper blades. These will damage your blades.

To make reaching the wiper blades easy, simply turn the ignition to the ACC position and turn your wipers on. Wait for them to reach a vertical position and turn the ignition to the OFF position. Do not move the wipers manually. Manually moving the wipers across the windshield may damage them.

Wiper blade replacement

If the wiper blades still do not work properly after you clean them, you may need to replace the wiper blade assembly or the blade element. When replacing the wiper blade assembly, blade refill, or wiper arm always use a Motorcraft part or equivalent. To replace the blades, follow the

Downloaded from www.Manualslib.com manuals search engine

Tires

Look at your tires each time you fill your fuel tank. If one tire looks lower than the others, check the pressure in all of them. Always follow these precautions:

- ❑ Keep your tires inflated to the recommended pressures.
- ❑ Stay within the recommended load limits (see *Load limits* in the Index).
- ❑ Make sure the weight of your load is evenly distributed.
- ❑ Drive at safe speeds.

If you do not take these precautions, your tires may fail or go flat.

Ford Motor Company recommends obeying posted speed limits.

⚠WARNING

Driving too fast for conditions creates the possibility of loss of vehicle control. Driving at very high speeds for extended periods of time may result in damage to vehicle components.

At least once a month, check the pressure in all your vehicle's tires, including the spare. Use an accurate tire pressure gauge. Check the tire pressure when tires are cold, after the vehicle has been parked for at least one hour or has been driven less than 3 miles (5 km). You can

Downloaded from www.Manualslib.com manuals search engine

⚠WARNING

Improperly inflated tires can affect vehicle handling and can fail suddenly, possibly resulting in loss of vehicle control.

Tire Rotation

Because your vehicle's front and rear tires perform different jobs, they often wear differently. To make sure your tires wear evenly and last longer, rotate them as indicated in the following diagram.

For tire rotation intervals, see the *Maintenance Schedule*. If you notice that the tires wear unevenly, have them checked.

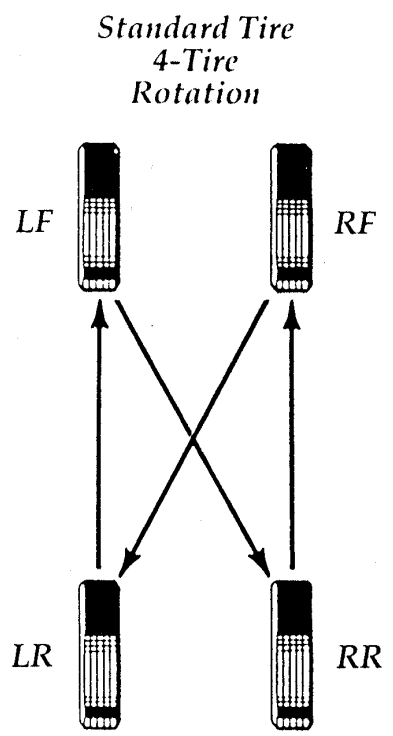

Downloaded from www.Manualslib.com manuals search engine

Replacing the Tires

Replace any tires that show wear bands. When your tire shows a wear band, it has only 1/16 inch (2 mm) of tread left.

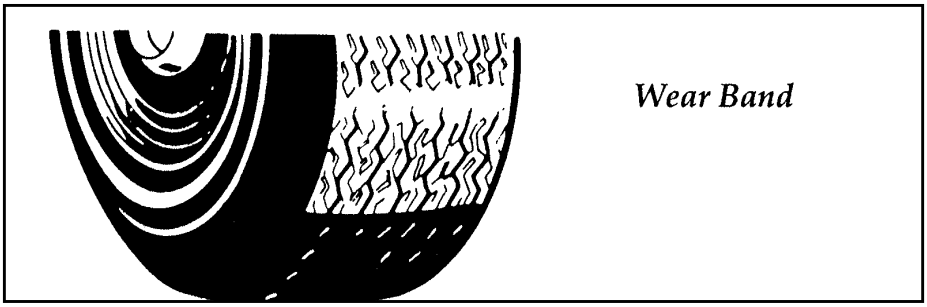

A worn-out tire

Because your vehicle's tires may wear unevenly, you may need to replace them before a wear band appears across the entire tread. Some spots wear more heavily than others.

⚠WARNING

When replacing full size tires, never mix radial, bias-belted, or bias-type tires. Use only the tire sizes that are listed on the tire pressure decal. Make sure that all tires are the same size, speed rating, and load-carrying capacity. Use only the tire combinations recommended on the decal. If you do not follow these precautions, your vehicle may not drive properly and safely.

Tires that are larger or smaller than your vehicle's original tires may also affect the accuracy of your speedometer.

Downloaded from www.Manualslib.com manuals search engine

Information About Tire Quality Grades

New vehicles are fitted with tires that have their Tire Quality Grade (described below) molded into the tire's sidewall. These Tire Quality Grades are determined by standards that the United States Department of Transportation has set.

Tire Quality Grades apply to new pneumatic tires for use on passenger cars. They do not apply to deep tread, winter-type snow tires, space-saver or temporary use spare tires, tires with nominal rim diameters of 10 to 12 inches or limited production tires as defined in Title 49 Code of Federal Regulations Part 575.104(c)(2).

U.S. Department of Transportation — Tire quality grades: The U.S. Department of Transportation requires Ford to give you the following information about tire grades exactly as the government has written it.

Treadwear

The treadwear grade is a comparative rating based on the wear rate of the tire when tested under controlled conditions on a specified government test course. For example, a tire graded 150 would wear one and one-half (1 1/2) times as well on the government course as a tire graded 100. The relative performance of tires depends upon the actual conditions of their use, however, and may depart significantly from the norm due to variations in driving habits, service practices and differences in road characteristics and climate.

Downloaded from www.Manualslib.com manuals search engine

Traction A B C

The traction grades, from highest to lowest, are A, B, and C, and they represent the tire's ability to stop on wet pavement as measured under controlled conditions on specified government test surfaces of asphalt and concrete. A tire marked C may have poor traction performance. Warning: The traction grade assigned to this tire is based on braking (straightahead) traction tests and does not include cornering (turning) traction.

Temperature A B C

The temperature grades are A (the highest), B, and C, representing the tire's resistance to the generation of heat and its ability to dissipate heat when tested under controlled conditions on a specified indoor laboratory test wheel. Sustained high temperature can cause the material of the tire to degenerate and reduce tire life, and excessive temperature can lead to sudden tire failure. The grade C corresponds to a level of performance which all passenger car tires must meet under the Federal Motor Vehicle Safety Standard No. 109. Grades B and A represent higher levels of performance on the laboratory test wheel than the minimum required by law. Warning: The temperature grade for this tire is established for a tire that is properly inflated and not overloaded. Excessive speed, underinflation, or excessive loading, either separately or in combination, can cause heat buildup and possible tire failure.

Downloaded from www.Manualslib.com manuals search engine

Snow Tires and Chains

The tires on your vehicle have all-weather treads that provide traction in rain or snow. However, during the winter months in some climates, you may need to use snow tires and occasionally chains for your tires.

⚠WARNING
Snow tires must be the same size and grade as the tires you currently have on your vehicle.

Use chains on the tires only in an emergency or if the law requires them where you live. If you choose to use chains on your vehicle's tires, be aware of the following:

- ❑ Make sure the chains are the right size for your tires. Use only SAE Class "S" chains. Other types may damage your vehicle.
- ❑ Put the chains on tightly with the ends held down securely. Verify that no chain touches any wiring, brake lines, or fuel lines. Follow the chain manufacturer's instructions.
- ❑ Drive slowly. If you can hear the chains rub or bang against your vehicle, stop the vehicle and tighten the chains. If you continue to hear the chains rub or bang against your vehicle, remove the chains to prevent damage to your vehicle.
- ❑ Avoid fully loading your vehicle if possible.
- ❑ Remove tire chains at the first opportunity

Downloaded from www.Manualslib.com manuals search engine

Cleaning the Wheels

Wash the wheels with the same detergent you use to wash your vehicle's body. Do not use acid-based wheel cleaners, steel wool, abrasives, fuel, or strong detergents. These substances will damage protective coatings. Use tar and road oil remover to remove grease and tar.

NOTE: Before going to a car wash, find out if the brushes are abrasive.

Automatic Transmission Fluid

Under normal circumstances, you do not need to check the fluid level of the transmission, since your vehicle does not use up transmission fluid. Refer to the *Maintenance Schedule and Record* booklet for replacement intervals. However, if the transmission is not working properly — for instance, the transmission may slip or shift slowly, or you may notice some sign of fluid leakage — the fluid level should be checked.

Checking the Automatic Transmission Fluid

It is preferable to check the transmission fluid level at normal operating temperature 150˚F-170˚F (66˚C-77˚C), after approximately 20 miles (30 km) of driving. However, if necessary, you can check the fluid level without having to drive 20 miles (30 km) to obtain a normal operating temperature if outside temperatures are above 50˚F (10˚C).

With the vehicle on a level surface, start the engine and, while fully applying the brake pedal, move the transmission shift selector

Downloaded from www.Manualslib.com manuals search engine

NOTE: Your vehicle should not be driven if the fluid level is below the low cold reading on the dipstick.

Wipe off the dipstick cap, pull the dipstick out and wipe the indicator end clean. Put the dipstick back into the filler tube and make sure it is fully seated. Pull the dipstick out and read the fluid level.

When checking fluid at normal operating temperature 150˚F-170˚F (66˚C-77˚C), the fluid level should be within the hot notched area on the dipstick. When the vehicle has not been driven, and outside temperatures are above 68˚F (20˚C), the fluid levels should be between the hot notch and the tip of the dipstick.

NOTE: If the vehicle has been operated for an extended period at high speeds or in city traffic during hot weather, or pulling a trailer, the vehicle should be turned off for about 30 minutes to allow the fluid to cool before checking.

Adding Automatic Transmission Fluid

Before adding any fluid, be sure that the correct type will be used. Use only MERCON® fluid.

Add fluid in 1/2 pint (.25L) increments through the filler tube to bring the level to the correct area on the dipstick. DO NOT OVERFILL. If the level is above the top hole on the dipstick, excess fluid should be removed by a qualified technician.

NOTE: Always dispose of used automotive

Downloaded from www.Manualslib.com manuals search engine

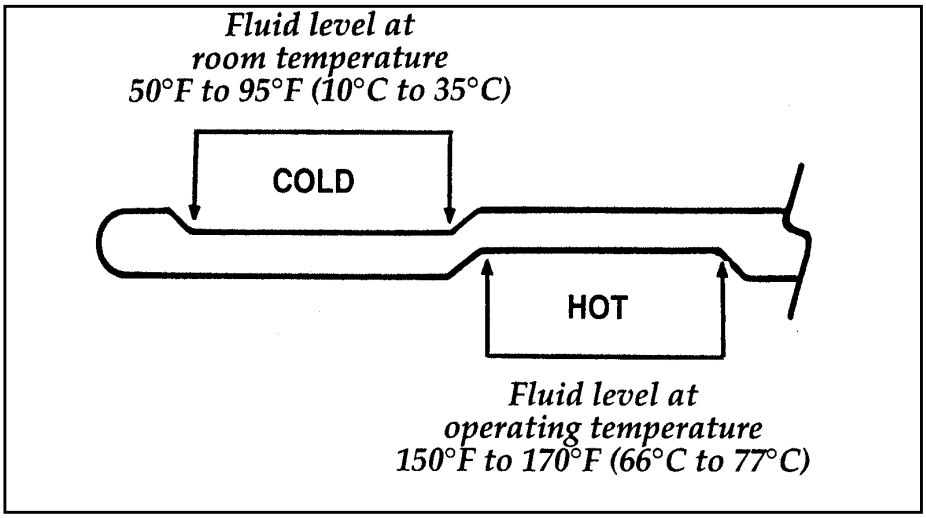

Detail of the automatic transmission dipstick

Brake Fluid

Under normal circumstances, your vehicle should not use up brake fluid rapidly. However, expect the level of the brake fluid to slowly fall as you put more mileage on your vehicle and the brake lining wears.

Check the brake fluid at each scheduled engine oil change or at least once a year. You can do this by looking at the fluid level in the plastic reservoir on the master cylinder. Also, see label on reservoir cap. (To locate the master cylinder, see *The Engine Types* in the Index.) The fluid level should be between the MIN and MAX marks.

⚠**WARNING**
Brake fluid is toxic.

If brake fluid contacts eyes, flush eyes with running water for 15 minutes. Get medical

Downloaded from www.Manualslib.com manuals search engine

If the fluid is low, carefully clean and remove the cap from the reservoir. Fill the reservoir to the MAX line with Ford High Performance DOT 3 Brake Fluid C6AZ-19542-AA, C6AZ-19542-BA, or equivalent DOT 3 fluid meeting Ford specification ESA-M6C25-A.

⚠WARNING
If you use a brake fluid that is not DOT 3, you will cause permanent damage to your brakes.

Do not fill the reservoir above the MAX line.

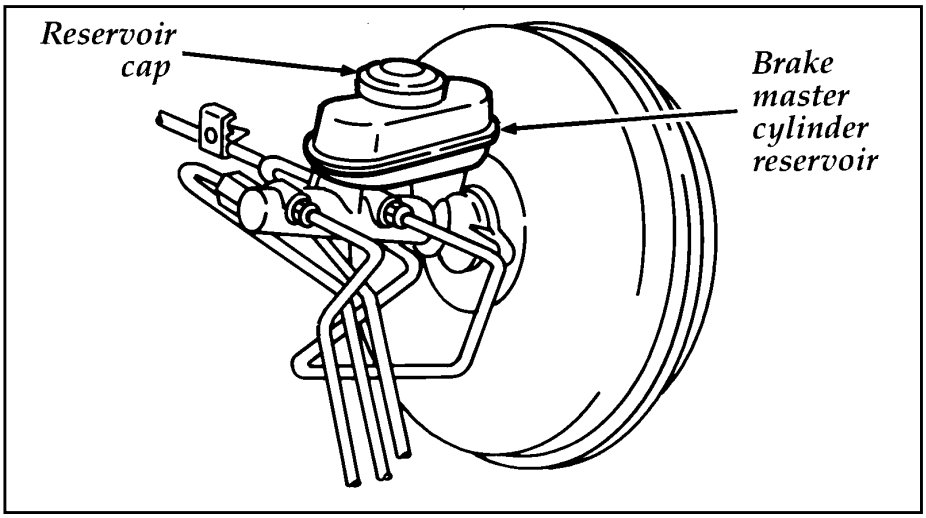

The brake system fluid reservoir

If you find that the fluid level is excessively low — below the seam or ridge on the outside of the plastic reservoir — have the brake system inspected.

⚠WARNING
Do not let the reservoir for the master cylinder run dry. This may cause the

Downloaded from www.Manualslib.com manuals search engine

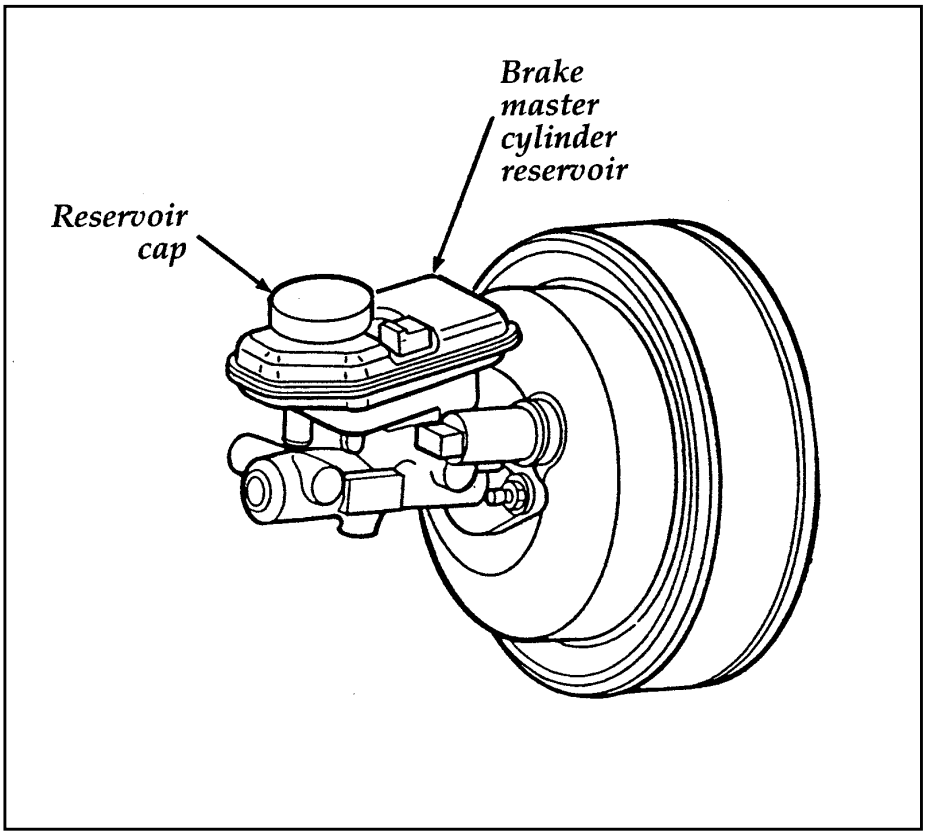

The anti-lock brake system fluid reservoir

Power Steering Fluid

Check the level of the power steering fluid at least twice a year (i.e., every Spring and Fall).

Checking and Adding Power Steering Fluid

3.8L SFI engine

1. Start the engine and let it run until the power steering fluid reaches normal operating temperature. The power steering fluid will be at the right temperature when the engine coolant temperature gauge in the instrument cluster is near the center of the NORMAL operating temperature range.

Downloaded from www.Manualslib.com manuals search engine

3. Turn the engine off.

4. Check the fluid level on the dipstick (which is highlighted in yellow in your vehicle). The fluid level should be between the arrows in the FULL HOT range, which is marked on the side of the dipstick, opposite the side marked FULL COLD. Do not add fluid if the level is within the FULL HOT range.

5. If the power steering fluid is low, add fluid in small amounts, continuously checking the level, until you reach the FULL HOT range. Do not overfill.

6. When you are finished, put the dipstick back in and make sure that it fits snugly.

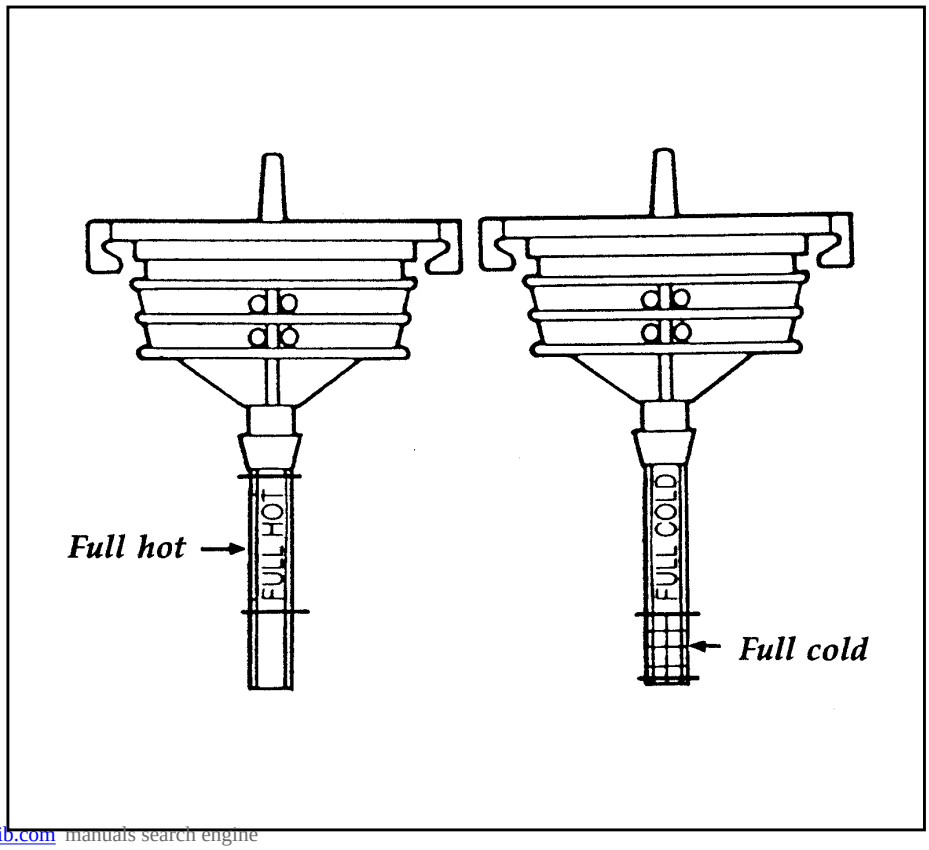

Downloaded from www.Manualslib.com manuals search engine

Use only power steering fluid that meets Ford Specification ESW-M2C33-F, such as Ford Premium Power Steering Fluid, E6AZ-19582-AA or is an equivalent Type F Automatic Transmission Fluid with a Ford registration number (an 8-digit number beginning with “2P” printed on the fluid container).

If the power steering fluid is low, do not drive your vehicle for a long period of time before adding fluid. This can damage the power steering pump.

If you check the power steering fluid when it is cold, make sure that the fluid reaches the FULL COLD range on the dipstick. The reading will only be accurate if the fluid temperature is approximately 50 to 85˚F (10 to 30˚C).

4.6L SFI engine

1. Check the fluid level when the system is COLD (allow at least one half hour after driving for the power steering fluid to cool).

2. Locate the power steering reservoir mounted to the front upper left-hand corner of the engine.

3. Visually verify that the fluid level is above the MIN line adjacent to the reservoir “sight window.”

4. If the power steering fluid is below the MIN line, remove the cap and add fluid in small amounts until the level is between the MIN and MAX lines.

Downloaded from www.Manualslib.com manuals search engine

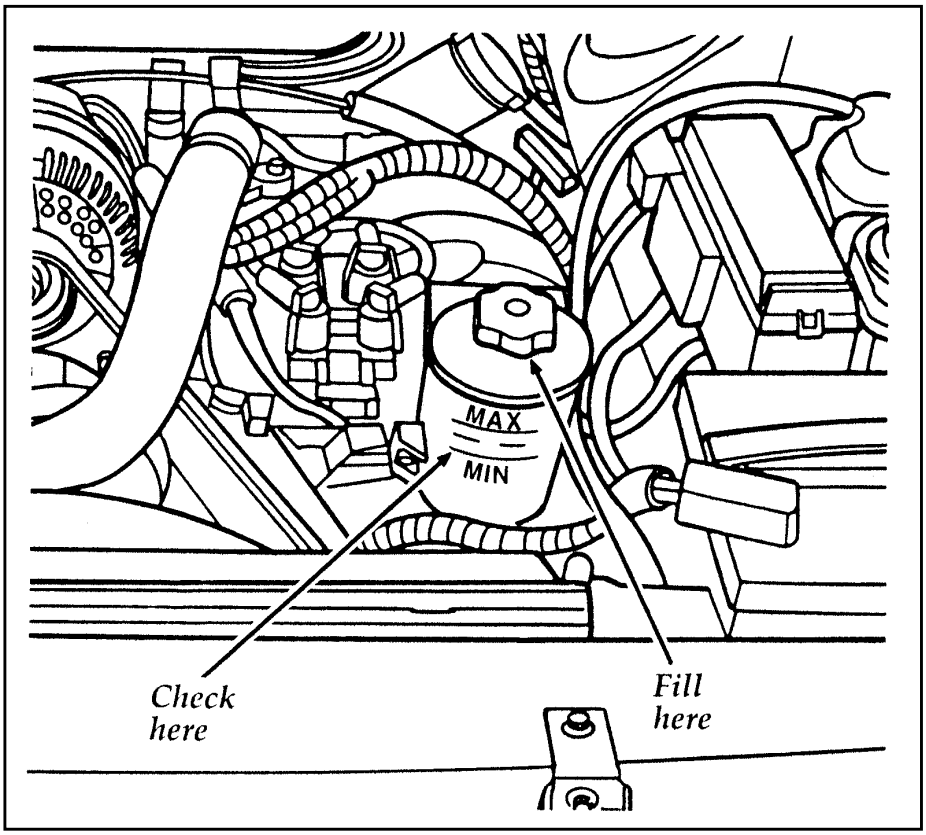

Fluid level for power steering

Use only power steering fluid that meets Ford's Specification ESW-M2C33-F, such as Ford Premium Power Steering Fluid, E6AZ-19582-AA or an equivalent Type F Automatic Transmission Fluid with a Ford registration number (an 8-digit number beginning with "2P" printed on the fluid container).

NOTE: If the power steering fluid is low, do not drive your vehicle for a long period of time before adding fluid. This can damage the power steering pump.

Downloaded from www.Manualslib.com manuals search engine

Fuses, High Current Fuses and Circuit Breakers

Fuses (conventional and high current) and circuit breakers protect your vehicle's wiring system from overloading. If electrical parts in your vehicle are not working, the system may have been overloaded and blown a fuse or tripped a circuit breaker. Before you replace or repair any electrical parts, check the appropriate fuses (conventional and high current) or circuit breakers.

The following charts tell you which fuses or circuit breakers protect the wiring for each electrical part of your vehicle. If a fuse blows or a circuit breaker opens a circuit, **all** the parts of your vehicle that use that circuit will not work.

Once you have determined which fuses or circuit breakers to check, follow the procedures under *Checking and replacing fuses* or *Checking and replacing circuit breakers* in this chapter.

Downloaded from www.Manualslib.com manuals search engine

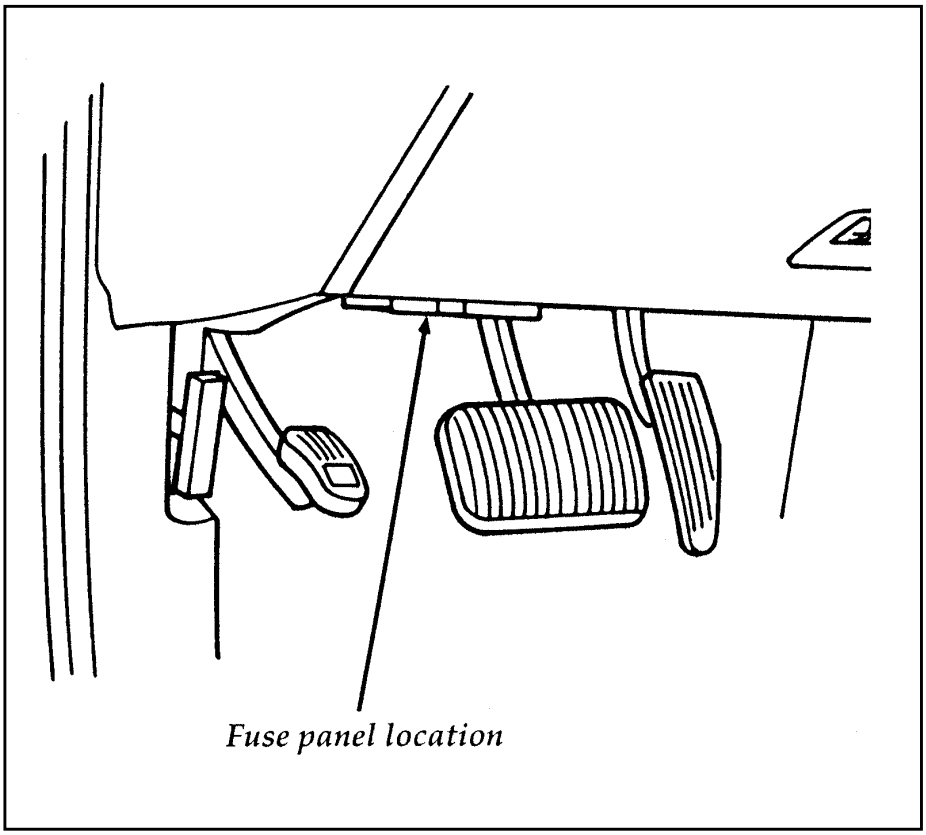

Fuse panel location

The instrument panel fuse panel location

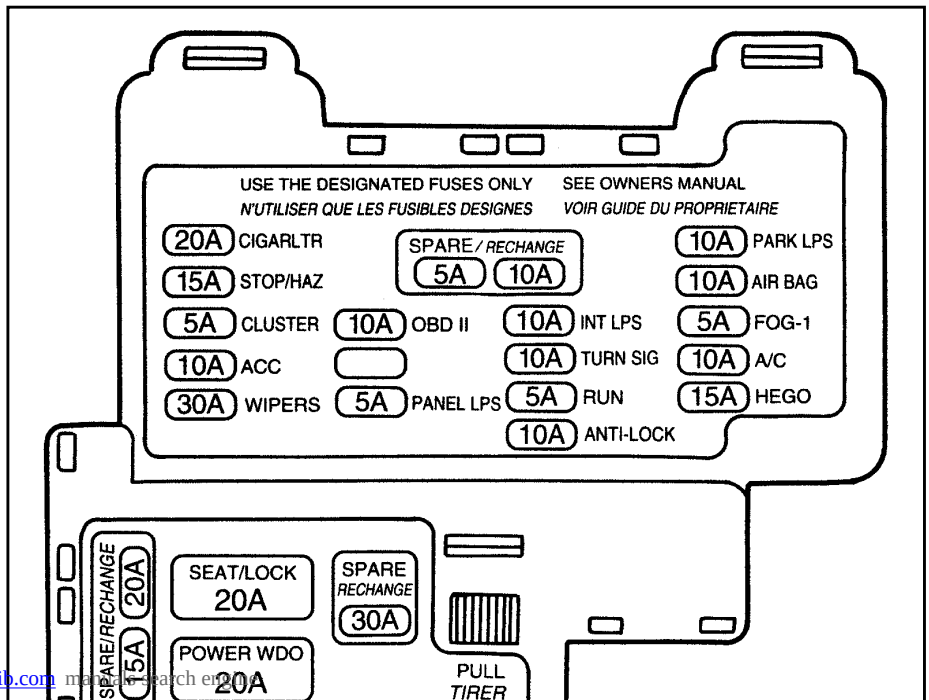

Downloaded from www.Manualslib.com manuals search engine

The Instrument Panel Fuses, Circuit Breakers and Relays

Fuse/CB Location	Fuse Amp Rating	Description
Run	5A	• Cluster • Defrost switch • Coolant level sensor • Washer level sensor • DRL module • EVO test • EVO steering sensor • ARC (EVO) module • ARC switch • Hard ride relay • Soft ride relay • EATC blend door • Air bag module • Overdrive cancel switch • Brake shift solenoid
Anti-Lock	10A	• Main ABS relay • ABS module
OBD-II	10A	• OBD-II test connector
Panel Lps.	5A	• Cluster illumination • Phone switch illumination • Rear defrost switch illumination • A/C switch-manual illumination • PRND21 illumination • Ashtray light • EATC illumination • Clock illumination • Radio illumination
Cigar Ltr.	20A	• Lighter • Flash to pass
Stop/Haz.	15A	• Speed control module • ABS module • Brake shift interlock • High mount brake lamp • Stop lamps • Flashers
Cluster	5A	• Cluster (gauges) • Cluster (ABS) • Cluster (air bags)

Downloaded from www.Manualslib.com manuals search engine

Fuse/CB Location	Fuse Amp Rating	Description
ACC	10A	• Integrated module • Voltmeter • Speed control • Remote keyless entry module • Anti-theft • Power window and lock switch illumination • Radio • CD changer • Power antenna • Clock
Wipers	30A	• Wiper motor • Washer motor

Downloaded from www.Manualslib.com manuals search engine

Fuse/CB Location	Fuse Amp Rating	Description
Seat/Lock	20A	• Power locks • Decklid release solenoid • Fuel door release solenoid • Power seats
Power Wdo	20A	• Power windows • Moon roof motor
Park Lps.	10A	• Panel dimmer • Front parking lamps • Parking lamps • License lamps • Autoshock module • Clock
Air Bag	10A	• Air bag module
A/C	10A	• A/C clutch
Hego	15A	• HEGO 1 and 2
Int. Lps.	10A	• Power mirrors • Anti-theft lamp • Trunk lamp • Map lamps • Vanity lamps • Glove compartment lamp • Engine compartment lamp • Instrument panel lamps • Rear courtesy lamps • Door courtesy lamps • Lock cylinder lamps • Dome lamp
Turn Sig	10A	• Indicators • Turn signals • Backup lamps

Downloaded from www.Manualslib.com manuals search engine

High Current Fuses

High current fuses are circuit protectors that are part of the wiring harness for some electrical equipment. These, like fuses, open when the circuit load exceeds their amperage rating. High current fuses may be purchased from your Ford or Lincoln-Mercury dealer.

The high current fuse panel is located in the engine compartment on the left-hand fender apron.

⚠WARNING
Always disconnect the battery before servicing high current fuses.

Ford recommends that high current fuses be replaced by a qualified technician.

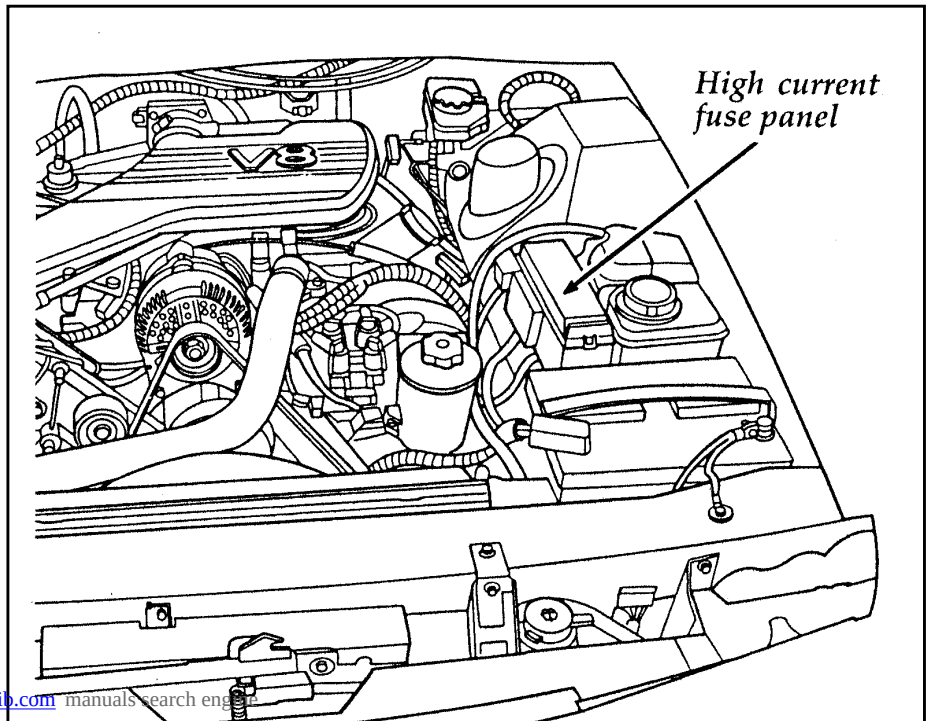

Downloaded from www.Manualslib.com manuals search engine

The high current fuse panel

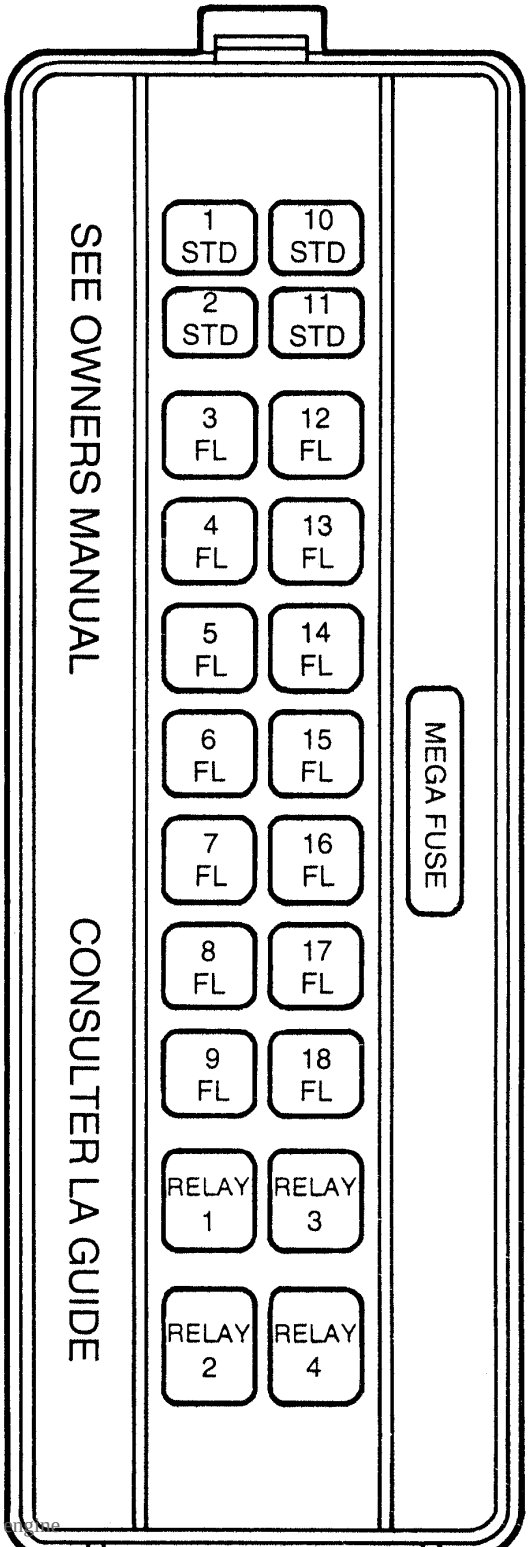

Downloaded from www.Manualslip.com manuals search engine

The high current fuses and relays

Fuse/Relay Location	High Current Fuse Amp Rating	Description
1 STD	15A	• DRL module
2 STD	5A	• Memory
3 FL	20A	• Ignition coil
4 FL	20A	• Autoshock
5 FL	60A	• Engine fan
6 FL	40A	• ABS motor
7 FL	60A	• Headlamps
8 FL	20A	• ABS module
9 FL	60A	• Ignition switch
10 STD	15A	• Horn
11 STD	15A	• Generator
12 FL	40A	• Fuse panel
13 FL	20A	• Fuel pump
14 FL	40A	• Rear defrost
15 FL	20A	• Electronic engine control (EEC) module
16 FL	30A	• Pusher fan
17 FL	60A	• Blower motor
18 FL	—	Not Used
Relay 1	—	Not Used
Relay 2	—	Not Used
Relay 3	—	• Horn
Relay 4	—	• ABS
Mega Fuse	175A	• Power distribution box

Downloaded from www.Manualslib.com manuals search engine

Checking and Replacing Fuses

If you need to check a fuse, follow these steps:

1. Find the fuse panel underneath the instrument panel, to the left of the steering column.

2. Check the fuse to see if it is blown. Look through the clear side of the fuse to see if the metal wire inside is separated. If it is, the fuse should be replaced.

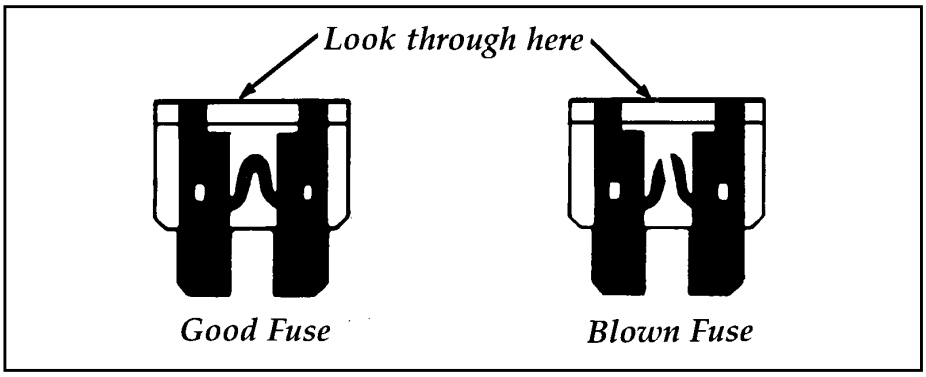

The side view of a fuse

3. Replace the fuse with one that has the right amperage rating. (See the following chart.) To remove the fuse use the pulling tool attached to the inside cover of the fuse panel. There are also four spare fuses attached to the cover.

Instrument Panel Fuse Color	Amperage
Tan	5A
Red	10A
Blue	15A
Yellow	20A
Natural	25A
Green	30A

Downloaded from www.Manualslib.com manuals search engine

Fuselink Cartridge Color	Amperage
Blue	20A
Pink	30A
Green	40A
Red	50A
Yellow	60A

⚠WARNING

Always replace a fuse with one that has the specified amperage rating. Using a fuse with a higher amperage rating can cause severe wire damage and could start a fire.

4. Close the cover.

Even after you replace a fuse, it will continue to blow if you do not find what caused the overload. If the fuse continues to blow, have your electrical system checked.

Circuit Breakers

If you need to check a circuit breaker that is on the fuse panel, see *Checking and replacing fuses* in this chapter to find out how to locate the fuse panel.

Circuit breakers will reset themselves and allow the electrical parts to work again once the overload on the circuit is removed. If the circuit breakers continue to cut off electricity, have your vehicle's electrical system checked.

Downloaded from www.Manualslib.com manuals search engine

If you replace a circuit breaker, use one with the same amperage rating. To remove a circuit breaker mounted in the fuse panel, grip it with your finger and thumb and pull it straight out of its socket.

Lights and Bulb Replacement

It is a good idea to check the operation of the following lights frequently:

- ❑ headlamps
- ❑ tail lamps
- ❑ brakelamps
- ❑ hazard flasher
- ❑ high-mount brakelamp
- ❑ turn signals
- ❑ license plate lamp

The alignment of your headlamps should be checked if:

- ❑ oncoming motorists frequently signal you to turn off your vehicle's high beams when you do not have the high beams on
- ❑ the headlamps do not seem to give you enough light to see clearly at night
- ❑ the headlamp beams are pointed substantially away from a position slightly down and to the right

Downloaded from www.Manualslib.com manuals search engine

Headlamp Bulb

The headlamps on your vehicle use replaceable bulbs. When the lamp burns out, simply replace the bulb, rather than the whole lamp.

⚠WARNING

Handle a halogen headlamp bulb carefully and keep out of children's reach. Grasp the bulb only by its plastic base and do not touch the glass. The oil from your hand could cause the bulb to break the next time the headlamps are operated.

Do not remove the burned-out bulb unless you can immediately replace it with a new one. If a bulb is removed for an extended period of time, contaminants may enter the headlamp housing and affect its performance.

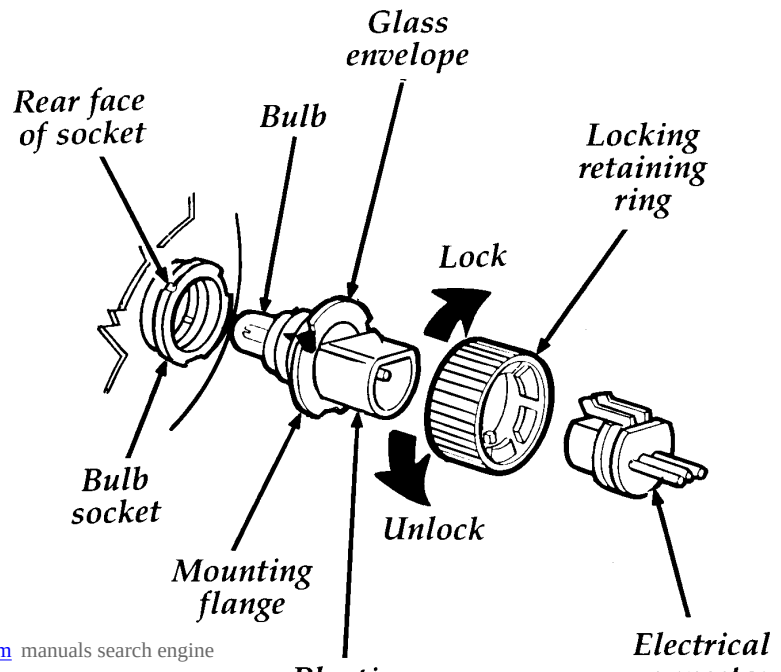

Downloaded from www.Manualslib.com manuals search engine

Removing the headlamp bulb

1. Make sure that the headlamp switch is in the OFF position.

2. Lift the hood and find the bulb in the headlamp socket.

3. Remove the electrical connector from the bulb by grasping the wire with a quick pull rearward.

4. Remove the retaining ring by turning it 1/8 of a turn to free it from the socket. Then slide the ring off the plastic base. **Keep the ring.** You must use it again to hold the new bulb in place.

Installing the headlamp bulb

1. With the flat side of the bulb's plastic base facing upward, insert the glass end of the bulb into the socket. You may need to turn the bulb left or right to line up the grooves in the plastic base with the tabs in the socket. When the grooves are aligned, push the bulb into the socket until the plastic base contacts the rear of the socket.

2. Slip the bulb retaining ring over the plastic base until it contacts the rear of the socket. Lock the ring into the socket by rotating it clockwise until you feel a "stop".

3. Push the electrical connector into the rear of the plastic base until it snaps, locking it into position.

Downloaded from www.Manualslib.com manuals search engine

High-Mount Brakelamp Bulbs

Your vehicle has a brakelamp mounted in the rear window, called a high-mount brakelamp. You may need to remove this lamp at times to replace the brakelamp bulb or to clean the rear window.

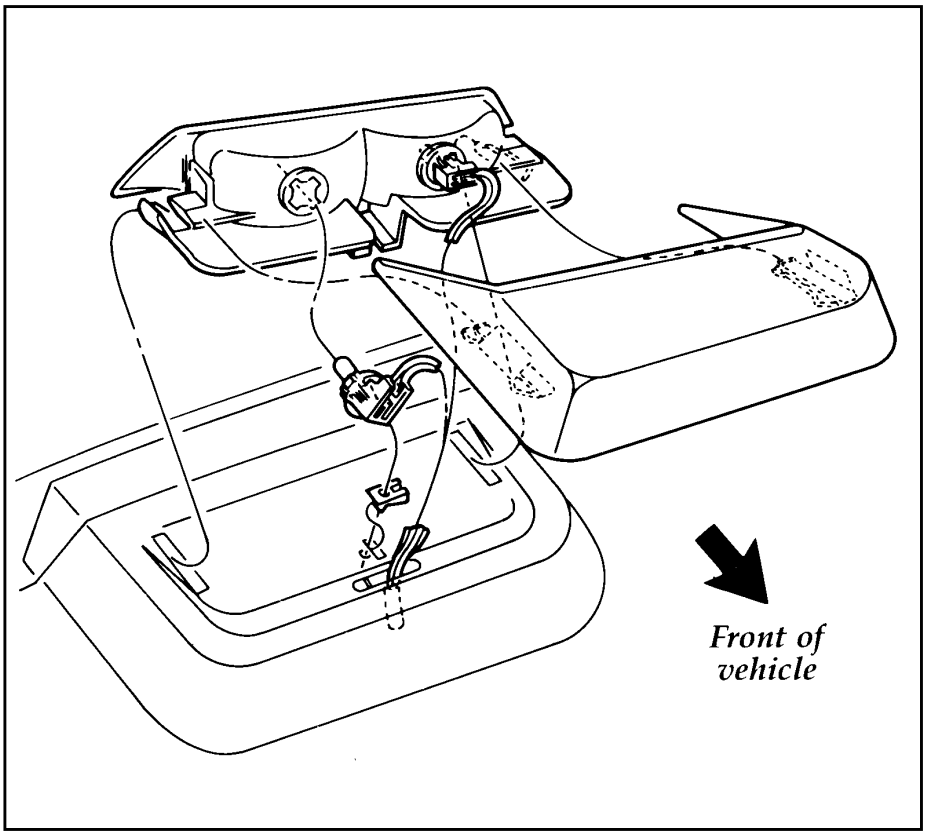

Parts of the high-mount brakelamp

Downloaded from www.Manualslib.com manuals search engine

To **remove** the high-mount brakelamp:

1. Slide the trim cover toward the front of the vehicle to disengage the retaining clips.
2. Twist the socket counterclockwise and remove from lamp.
3. Pull bulb out of socket.
4. Remove the retaining screw.
5. Lift the lamp above the carpet and slide away from the rear window.
6. Replace the burned out bulbs.

To **install** the high-mount brakelamp:

1. Slide the lamp into slots, toward the rear window.
2. Install the screw.
3. Push bulb into the socket.
4. Install the bulb and socket into the lamp and twist socket clockwise until it locks.
5. Slide the trim cover toward rear of vehicle to engage the retaining clips.

Downloaded from www.Manualslib.com manuals search engine

Using the Right Bulbs

Function	Trade number
Exterior lights	
Rear	
Tail lamp, brakelamp, turn lamp side marker	3157
Front	
Parklamp, turn lamp, side marker	3157NA**
Backup lamp	3156
License plate lamp	194
High-mounted brakelamp	921
Headlamps	
Lo beam/Hi beam	9007
Interior lights	
Luggage compartment lamp	912
Dome lamp	912
Dome/map lamp	
Dome	912
Map	105
Courtesy lamps	98
Door courtesy lamp	168
Floor console storage bin lamp	T1865
Floor console ashtray lamp	1893
Visor vanity lamp (opt.)	194
Engine compartment lamp (opt.)	906
Instrument panel lights	
Glove compartment	194
High beam indicator	194
Cigar lighter lamp	161
Radio illumination	•
Warning lights (all)	194
Turn signal indicator	194
Fan	1892
"PRND21" bulb	194
Heater or Heater A/C	37
Semi automatic climate control	37
Instrument cluster lights	
Mechanical	194/37

**NA means Natural Amber

• Refer bulb replacement to a Ford authorized radio service center.

Downloaded from www.Manualslib.com manuals search engine

Emission Control System

Your vehicle is equipped with a catalytic converter which enables your vehicle to comply with applicable exhaust emission requirements.

⚠WARNING

Exhaust leaks may result in the entry of harmful and potentially lethal fumes into the passenger compartment. Under extreme conditions excessive exhaust temperatures could damage the fuel system, the interior floor covering, or other vehicle components, possibly causing a fire.

To make sure that the catalytic converter and the other emission control parts continue to work properly:

- ❑ Use only unleaded fuel.
- ❑ Avoid running out of fuel.
- ❑ Do not turn off the ignition while your vehicle is moving, especially at high speeds.
- ❑ Do not push start your vehicle.
- ❑ Have the services listed in the *Maintenance Schedule and Record* booklet performed according to the specified schedule. The scheduled maintenance services are required because they are considered essential to the life and performance of your vehicle and to its emissions system.

Downloaded from www.Manualslib.com manuals search engine

In general, maintenance, replacement, or service of the emissions control devices or systems in your new Ford Motor Company vehicle or engine may be performed at your expense by any automotive repair establishment or individual using automotive parts equivalent to those which your vehicle or engine was originally equipped.

Ford strongly recommends the use of genuine Ford replacement parts. If other than Ford or Motorcraft parts or Ford authorized remanufactured parts are used for maintenance replacements or for the service of components affecting emissions control, such non-Ford parts should be equivalent to genuine Ford Motor Company parts in performance and durability. It is the owner's responsibility to determine the equivalency of such parts. Please consult your warranty booklet for complete warranty information.

⚠WARNING

Do not park, idle, or drive your vehicle in dry grass or other dry ground cover. The emission system heats up the engine compartment and exhaust system, which can start a fire.

Watch for fluid leaks, strange odors, smoke, loss of oil pressure, the charge warning light, the check engine light, or the temperature warning light. These sometimes indicate that the emission system is not working properly.

Downloaded from www.Manualslib.com manuals search engine

Do not make any unauthorized changes to your

By law, anyone who manufactures, repairs, services, sells, leases, trades vehicles, or supervises a fleet of vehicles is not permitted to intentionally remove an emission control device or prevent it from working. In some of the United States and in Canada, vehicle owners may be liable if their emission control device is removed or is prevented from working.

Never use a metal exhaust collector when you service your vehicle. If the metal collector contacts any of your vehicle's plastic trim or bumper parts they could melt or deform.

Do not drive your vehicle if it does not operate properly. See your dealer if the engine runs on for more than five seconds after you shut it off or if it misfires, surges, stalls, or backfires.

Information about your vehicle's emission control system is on the Vehicle Emission Control Information decal located on or near the engine. This decal identifies engine displacement and gives some tune-up specifications.

Readiness for Inspection/Maintenance Testing

In some localities it may become a legal requirement to pass an Inspection/Maintenance (I/M) test of the On-Board Diagnostic (OBD) II system. If the vehicle's powertrain system or its battery has just been serviced, the OBD II system is reset to a not ready for I/M testing condition. To prepare for I/M testing, the law specifies a "need for additional mixed city and highway

Downloaded from www.Manualslib.com manuals search engine

varies with individual driving patterns. To complete this requirement in the minimum amount of time, refer to the OBD II Drive Cycle defined below. If the vehicle owner cannot or does not want to do the additional driving required by law, a service center can perform this drive cycle as it would any other type of repair work.

OBD II Drive Cycle

The following steps must be run in the order shown. If steps 2 thru 9 are interrupted, repeat the preceding step. Any safe driving mode is acceptable between steps.

Always drive vehicle in safe manner according to traffic conditions and obey all traffic laws.

The engine must be warmed up and at operating temperature before proceeding with the drive modes of the following OBD II Drive Cycle.

1. Start the engine. Drive or idle (in neutral) the vehicle for 4 minutes.

2. Idle the vehicle in drive for 40 seconds.

3. Accelerate the vehicle to 45 mph (72 km/h) at 1/4 to 1/2 throttle for 10 seconds.

4. Drive the vehicle with a steady throttle at 45 mph (72 km/h) for 30 seconds.

5. Idle the vehicle in drive for 40 seconds.

Downloaded from www.Manualslib.com manuals search engine

6. Continue to drive the vehicle in city traffic at speeds between 25 and 40 mph (40-64 km/h) for 15 minutes. During the 15 minute drive cycle the following modes must be achieved:

   a. at least 5 stop and idle modes at 10 seconds each

   b. acceleration from idles at 1/4 to 1/2 throttle position, and

   c. choose 3 different speeds to do 1.5 minute steady state throttle drives.

7. Accelerate the vehicle up to between 45 and 60 mph (72-97 km/h). This should take approximately 5 minutes.

8. Drive vehicle and hold the throttle steady at the selected speed between 45 and 60 mph (72-97 km/h) for approximately 5 minutes.

9. Drive the vehicle for 5 minutes at varying speeds between 45 and 60 mph (72-97 km/h).

10. Bring the vehicle back to idle. Idle in drive for 40 seconds.

11. OBD II drive cycle has been completed. Vehicle can be turned off when convenient.

Downloaded from www.Manualslib.com manuals search engine

Refill Capacities, Motorcraft Parts, and Lubricant Specifications

Refill Capacities

Component	U.S.	Metric
Cooling system (including heater)		
3.8L SFI engine	12.6 qts.	11.9 liters
4.6L SFI engine	14.1 qts.	13.3 liters
Engine oil* (with filter change)		
All engines***	5.3 qts.	5.0 liters
Transmission*		
Automatic — overdrive (4R70W)	13.9 qts.	13.1 liters
Rear axle①		
7.5" Conventional	2.75 pints	1.3 liters
7.5" Traction-Lok**	2.75 pints	1.3 liters
8.8" Conventional	3.25 pints	1.5 liters
8.8" Traction-Lok**	3.25 pints	1.5 liters
Power steering	1.6 pints	.70 liter
Fuel tank	18.0 gallons	68.1 liters
Radiator cap	16 psi	110 kPa

*Dipstick is used to determine the exact fill requirements.
**For Traction-Lok add 4 oz. F3TZ-19B546-MA (WSP-M2C196-A) Friction Modifier for complete refill of independent rear suspension (IRS) rear axle.
① To below bottom of the filler hole.

NOTE: Rear axle lube quantities must be replaced every 100,000 miles (160,000 km) or if the axle has been submerged in water. Otherwise, the lube should not be checked or changed unless a leak is suspected or repair

Downloaded from www.Manualslib.com manuals search engine

Motorcraft Parts

Component	Part Number	
	3.8L SFI Engine	4.6L SFI Engine
Spark plug*	AWSF-44EE**	AWSF-32PP
Air filter	FA-1061	FA-1061
Fuel filter	FG-881	FG-881
Oil filter	FL-400A	FL-820
PCV valve	EV-153	EV-98
Battery Auto. trans. Optional	 BX-58C BXT-65-650	 BXT-65-650 BXT-65-850

*Refer to Vehicle Emission Control Information (VECI) decal for spark plug and gap specifications.
**AWSF-44PP for California vehicles.

If a spark plug is removed for examination, it must be reinstalled in the same cylinder.

For 3.8L engines:

Cylinders #1, #2, #3 have an EG suffix.

Cylinders #4, #5, #6 have an E suffix.

For 4.6L (2V) engines:

Cylinders #1, #2, #3, #4 have a PG suffix.

Cylinders #5, #6, #7, #8 have a P suffix.

If a spark plug needs to be replaced, use only spark plugs with the service number suffix letter as shown on the engine decal.

Downloaded from www.Manualslib.com manuals search engine

Lubricant Specifications

ITEM	FORD PART NO.	PART NAME	FORD SPECIFICATION
Hinges, Hinge Checks and Pivots	D7AZ-19584-AA	Multi-Purpose Grease Spray	ESR-M1C159-A
Brake Master Cylinder	C6AZ-19542-AA	Ford High Performance DOT 3 Brake Fluid	ESA-M6C25-A
Tie Rods	XG-1-C	Long Life Grease	ESA-M1C75-B
Door Latch, Hood Latch and Auxiliary Catch	D0AZ-19584-AA	Multi-Purpose Grease	ESR-M1C159-A and ESB-M1C93-A
Lock Cylinders	D8AZ-19587-AA	Ford Lock Lubricant	ESB-M2C20-A
Door Weatherstrips	C0AZ-19553-AA	Silicone Lube	ESR-M13P4-A
Rear Axle Conventional and Traction-Lok (1)	XY-90-QL	Premium Rear Axle Lubricant	ESP-M2C154-A and WSP-M2C197-A
Power Steering (Pump Reservoir)	XT-1-QF	Motorcraft Automatic Transmission Fluid — Type F	ESW-M2C33-F
Throttle Valve (TV) Linkage or Kickdown Linkage	XG-1-C	Long Life Grease	ESA-M1C75-B
Halfshaft Assemblies	E43Z-19590-A	High Temperature Constant Velocity Joint Grease	ESP-M1C207-A

(1) For Traction-Lok Add 2 oz. of F3TZ-19B546-MA (WSP-M2C196-A) Friction Modifier for complete refill of independent rear suspension (IRS) rear axle.

Downloaded from www.Manualslib.com manuals search engine

ITEM	FORD PART NO.	PART NAME	FORD SPECIFICATION
Automatic Overdrive (4R70W) Transmission•	XT-2-QDX	Motorcraft MERCON® Automatic Transmission Fluid	MERCON®
Engine Oil Filter 3.8L Engines	E4FZ-6731-A (FL-400A)	Motorcraft Oil Filter Long Life Type	ES-E4EE-6714-AA
4.6L Engine	F1AZ-6731-A (FL820)	Motorcraft Oil Filter Long Life Type	ES-F1AE-6714-AB
Engine Oil — Gasoline Engines 3.8L Engines 4.6L Engines	XO-5W30-QSP	Motorcraft Motor Oil: 5W30 Super Premium	ESE-M2C153-E and API Certification Mark
Engine Coolant	E2FZ-19549-AA	Ford Premium Cooling System Fluid	ESE-M97B44-A

• Refer to safety compliance certification label to determine type of transmission.

NOTE: Rear axle lube quantities must be replaced every 100,000 miles (160,000 km) or if the axle has been submerged in water. Otherwise, the lube should not be checked or changed unless a leak is suspected or repair required.

Vehicle Storage

Maintenance Tips

If you plan on storing your vehicle for an extended period of time (60 days or more), refer to the following maintenance recommendations to ensure your vehicle stays in good operating condition.

General

- ❑ Store all vehicles in a dry, ventilated place.
- ❑ Protect from sunlight, if possible.

Downloaded from www.Manualslib.com manuals search engine

Body

- ❑ Wash vehicle thoroughly to remove dirt, grease, oil, tar or mud from exterior surfaces, rear wheel housing and underside of front fenders.
- ❑ Periodically wash vehicles stored in exposed locations.
- ❑ Touch-up raw or primed metal to prevent rust.
- ❑ Cover chrome and stainless steel parts with a thick coat of auto wax to prevent discoloration. Re-wax as necessary when the vehicle is washed.
- ❑ Lubricate all hood, door and trunk lid hinges and latches with a light grade oil.
- ❑ Cover interior soft trim to prevent fading.
- ❑ Keep all rubber parts free from oil and solvents.

Engine

- ❑ Start engine every 15 days. Run at fast idle until it reaches normal operating temperature.
- ❑ With your foot on the brake, shift through all the gears while the engine is running.

Fuel system

- ❑ Fill fuel tank with high-quality unleaded fuel until the first automatic shutoff of the fuel pump nozzle.

NOTE: During extended periods of vehicle storage (60 days or more), fuel may

Downloaded from www.Manualslib.com manuals search engine

Ford Gas Stabilizer should be added whenever actual or expected storage periods exceed 60 days. Follow the instructions on the label. The vehicle should then be operated at idle speed to circulate the additive throughout the fuel system.

Cooling system

- ❑ Protect against freezing temperatures.

Battery

- ❑ Check and recharge as necessary.
- ❑ Keep connections clean and covered with a light coat of grease.
- ❑ If storing your vehicle for more than 30 days without recharging the battery, it may be advisable to disconnect the battery cables to ensure battery charge is maintained for quick starting.

NOTE: If battery cables are disconnected, it will be necessary to reset memory features.

Brakes

- ❑ Make sure brakes and parking brake are fully released.

Downloaded from www.Manualslib.com manuals search engine

Tires

- ❑ Maintain recommended air pressure.

Miscellaneous

- ❑ Make sure all linkages, cables, levers and clevis pins under vehicle are covered with grease to prevent rust.
- ❑ Move vehicles at least 25 feet (8 m) every 15 days to lubricate working parts and prevent corrosion.

Downloaded from www.Manualslib.com manuals search engine

YOU FOUND THE RIGHT PLACE.

Quality Care is more than automotive service.

It's our goal to make you so happy with your vehicle and our service, you'll want to come back. For service. And your next vehicle.

Quality Care.
It's at your dealer.

Mercury

QUALITY CARE

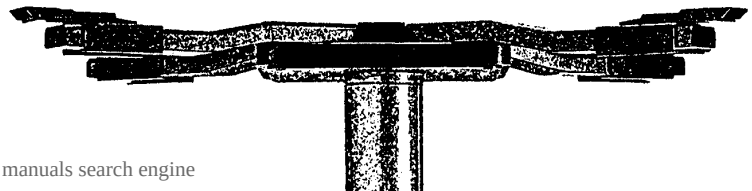

©1995 Ford Motor Company

Downloaded from www.Manualslib.com manuals search engine

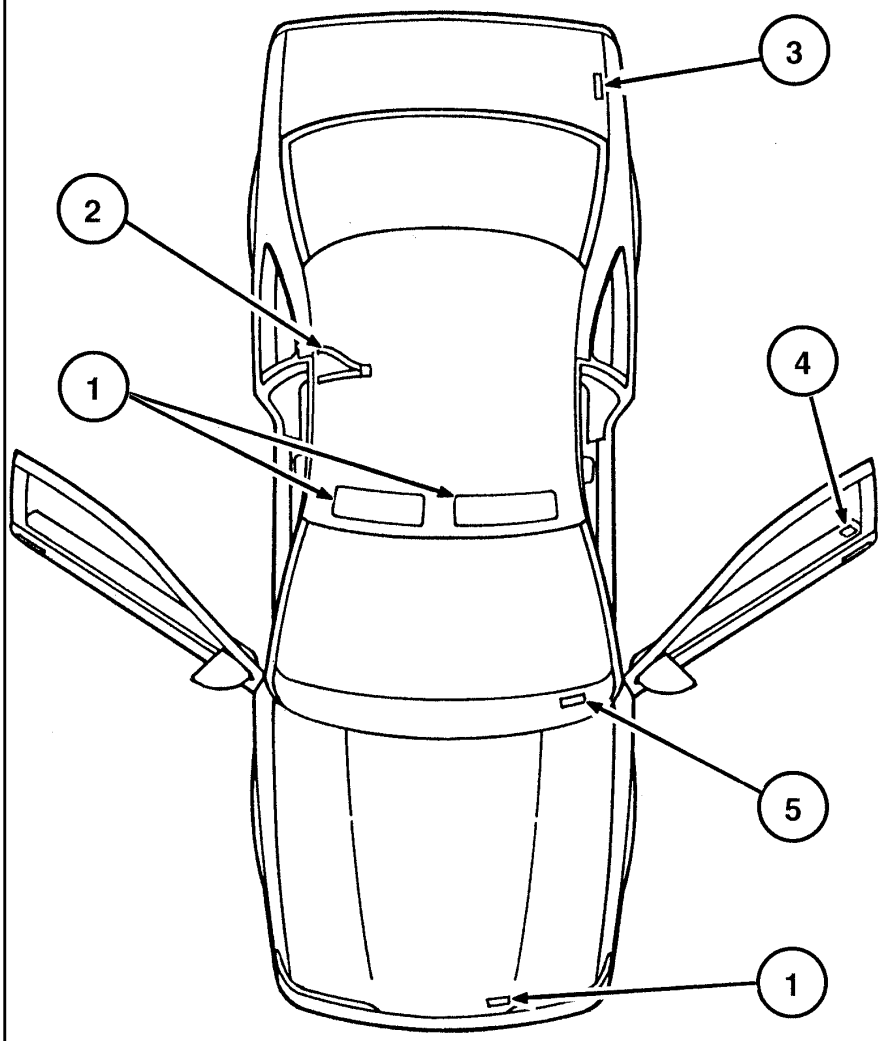

No.	Description	Refer to this label for information regarding:
1	Air Bag Warning Labels	Air bag precautions
2	Child Seat Label	Child seat installation precautions
3	Fuel Pump Shut-Off Label	Fuel pump shut off location
4	Safety Compliance Certification Label	Name and date of manufacturer, GVWR*, GAWR**
5	Vehicle Identification	Servicing or warranty

Downloaded from www.Manualslib.com manuals search engine

Downloaded from www.Manualslib.com manuals search engine

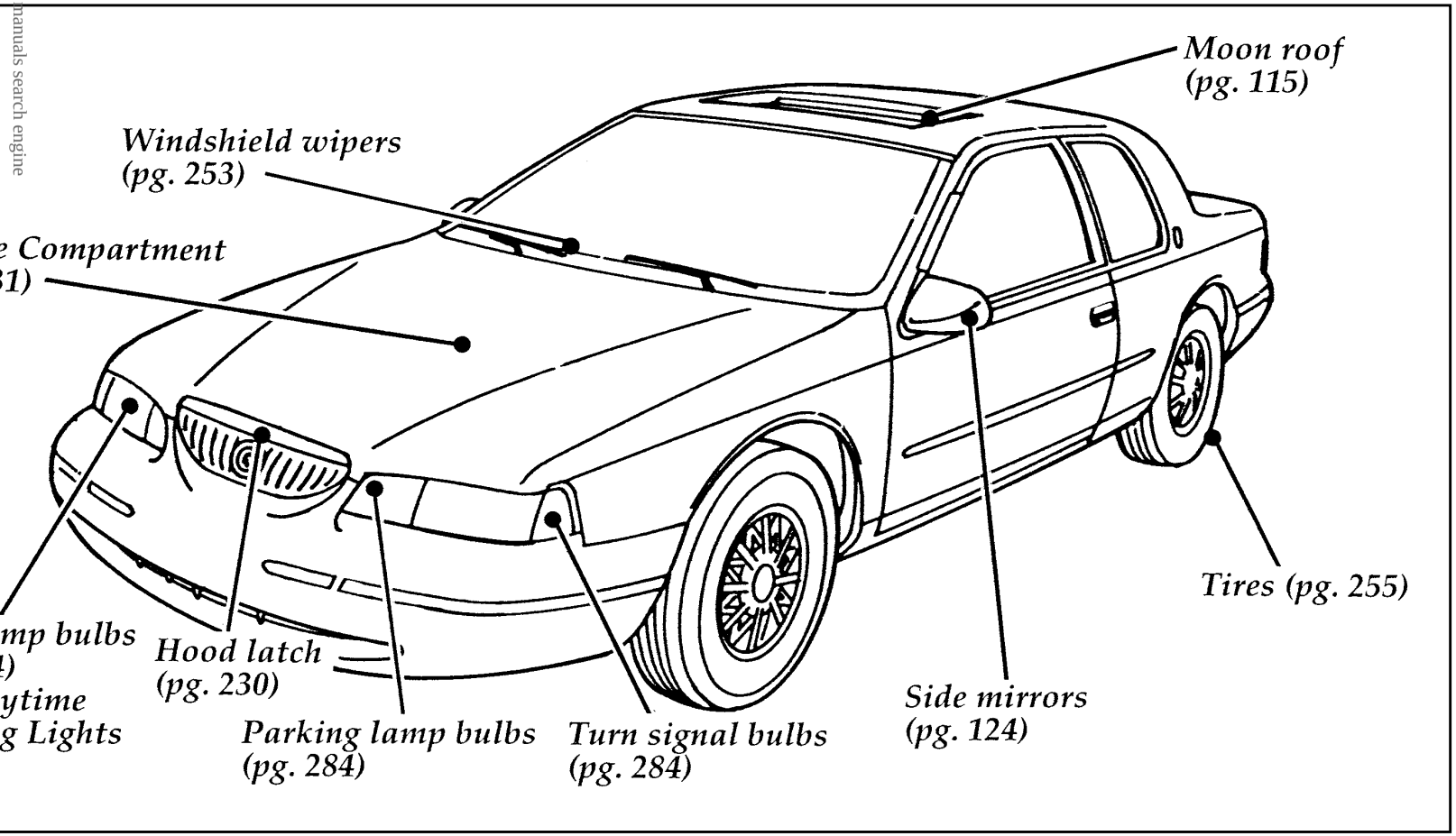

Downloaded from www.Manualslib.com manuals search engine

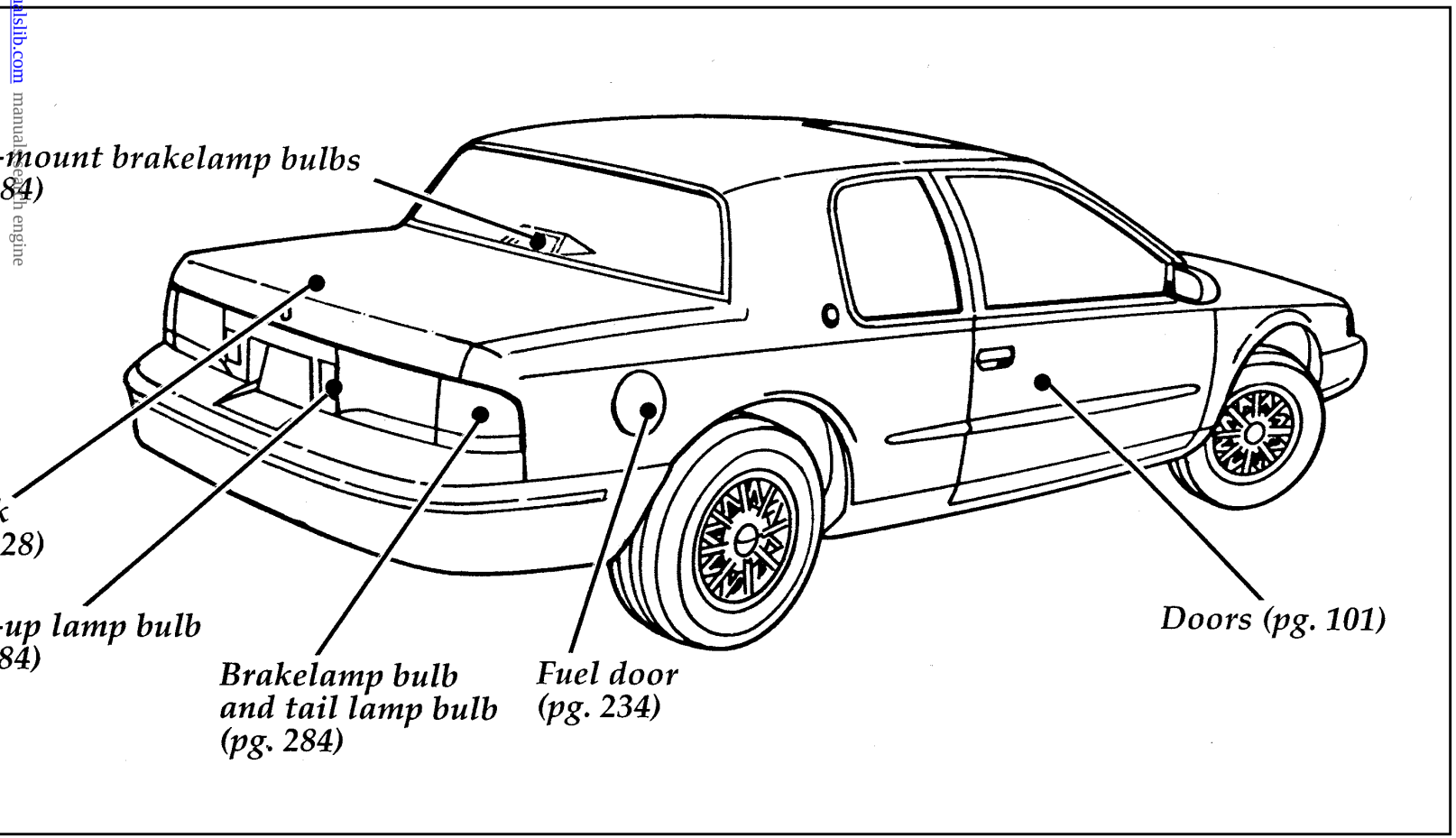

Downloaded from www.Manualslib.com manuals search engine

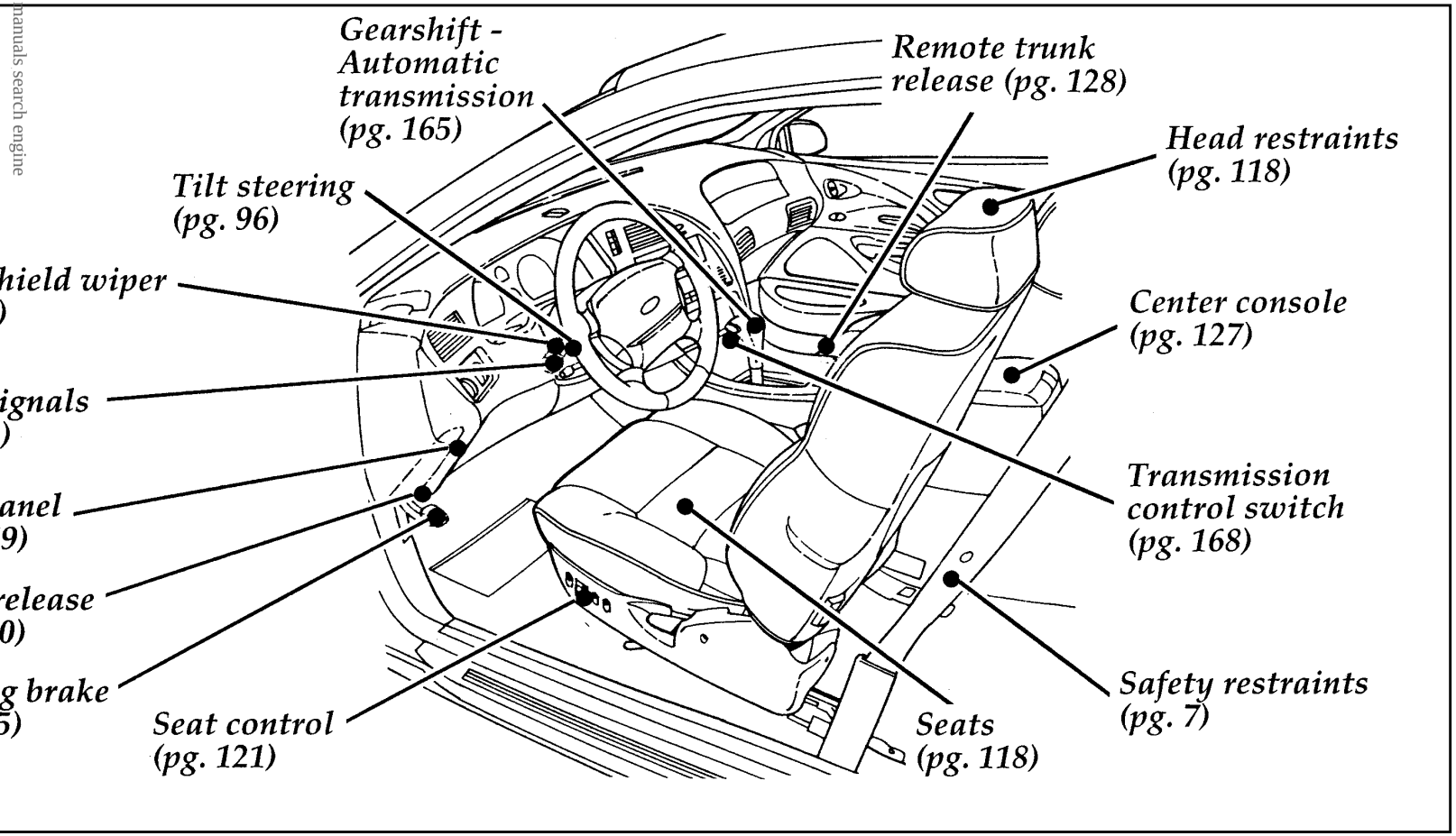

Downloaded from www.Manualslib.com manuals search engine

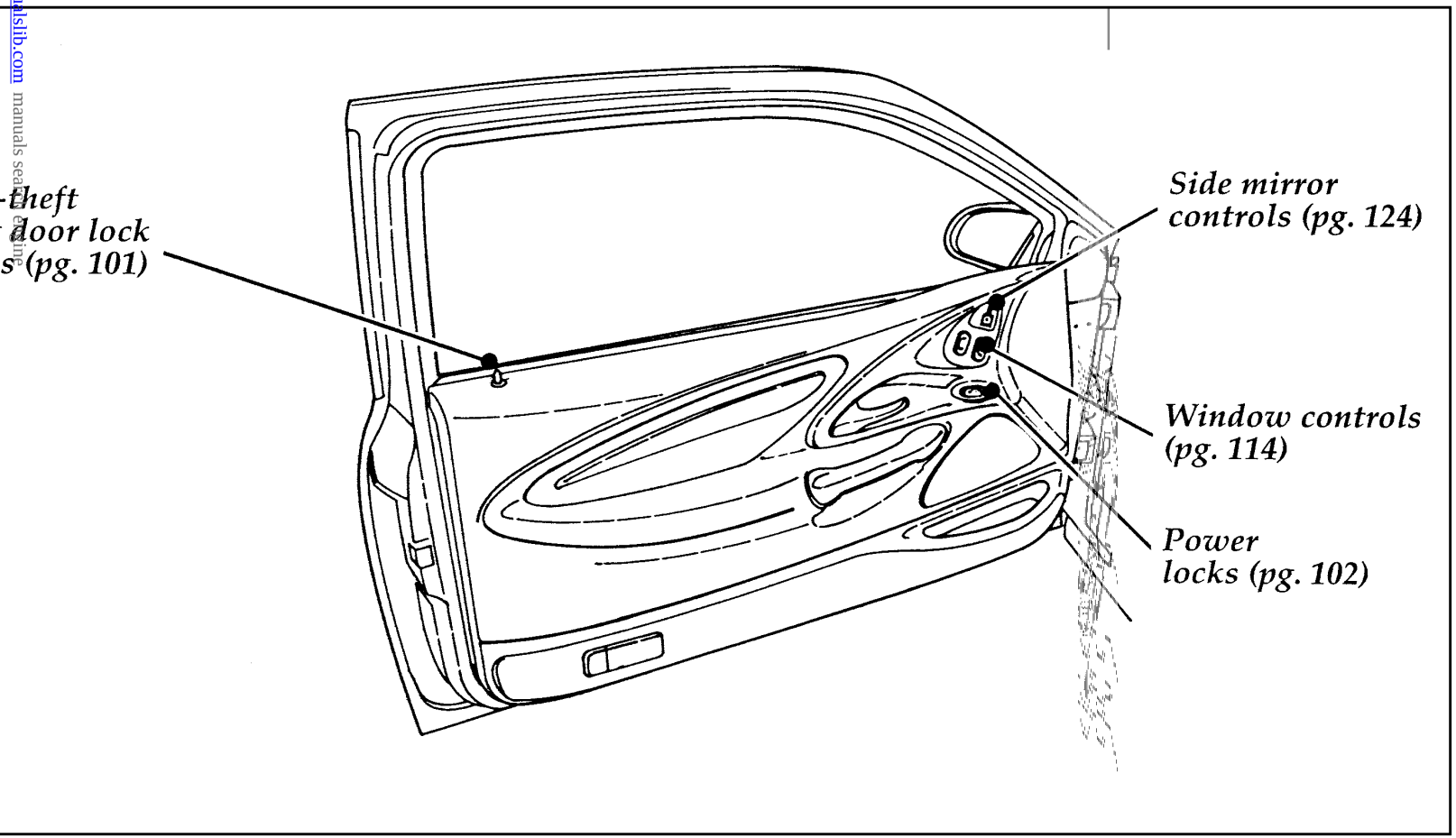

Downloaded from www.Manualslib.com manuals search engine

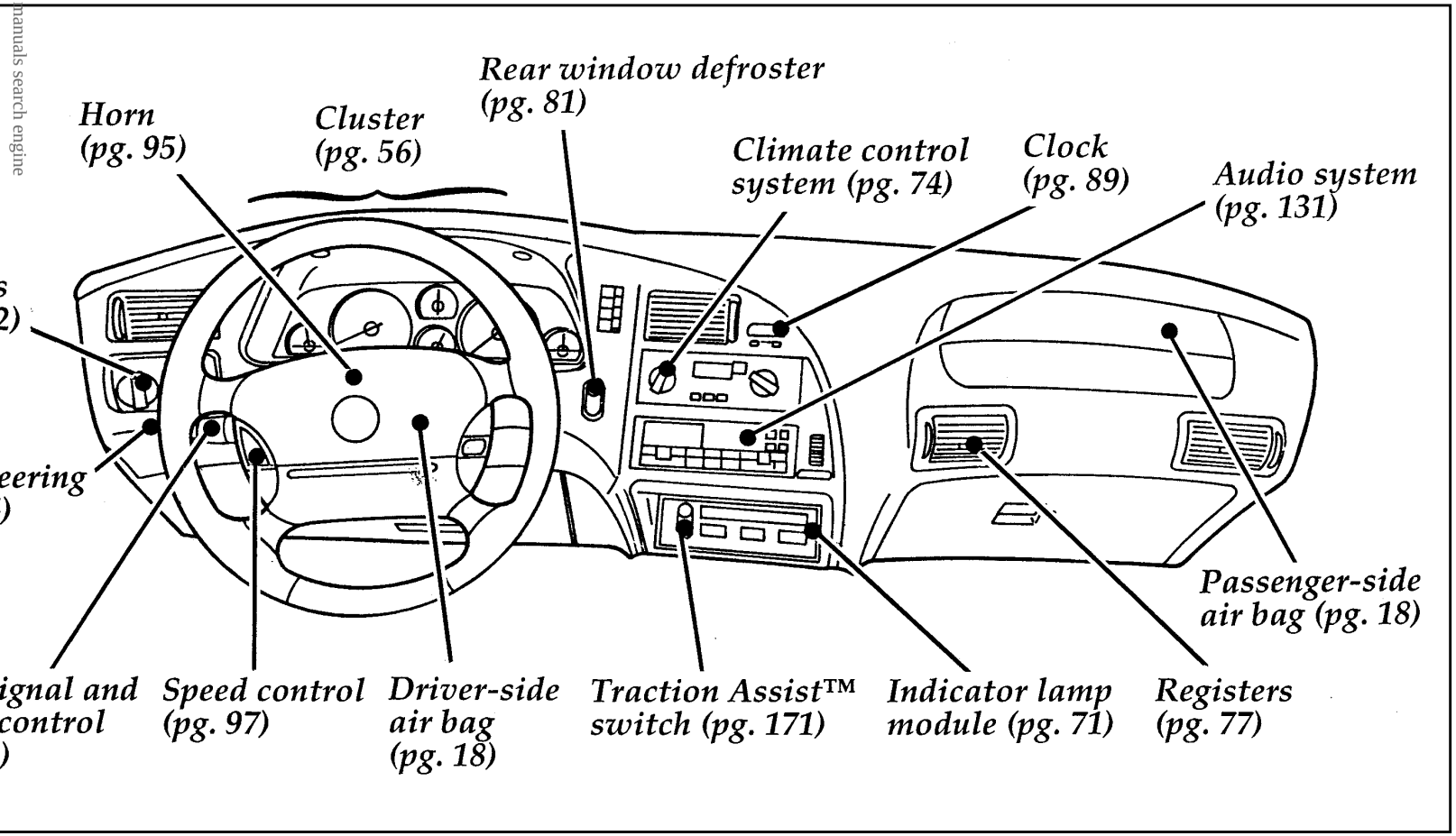

Downloaded from www.Manualslib.com manuals search engine

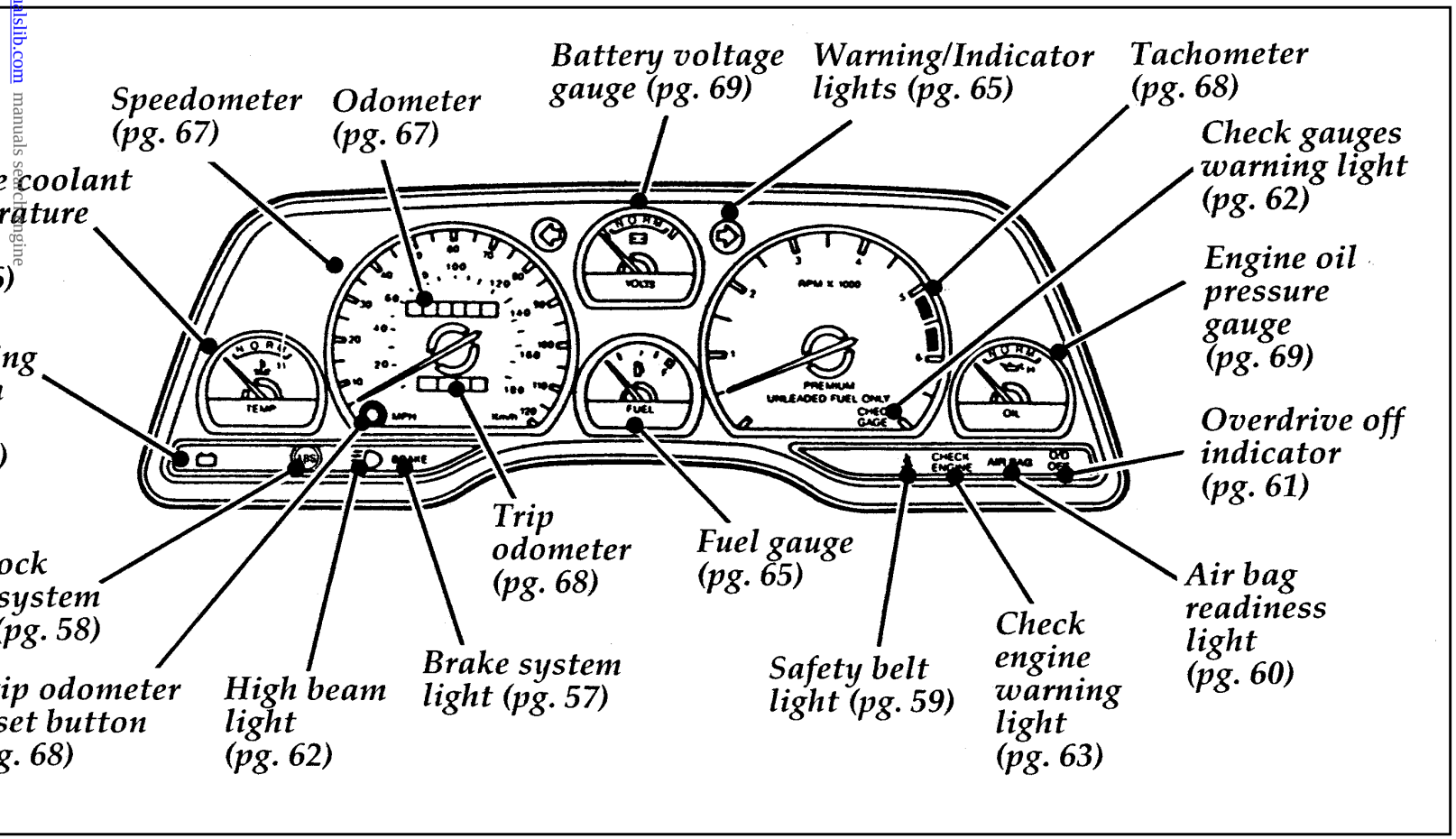

XMOZ- XO-CO

Downloaded from www.Manualslib.com manuals search engine

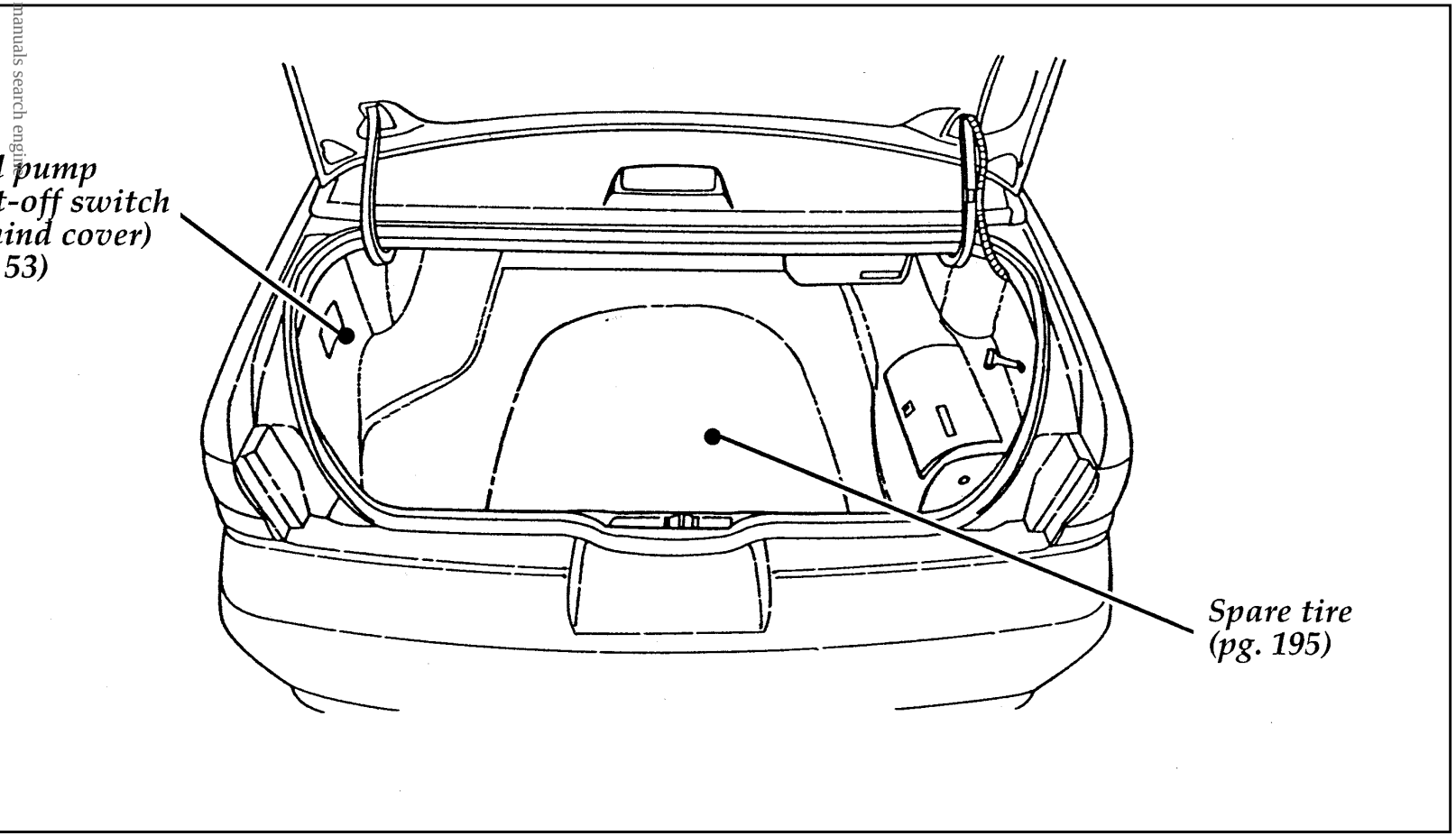

Downloaded from www.Manualslib.com manuals search engine

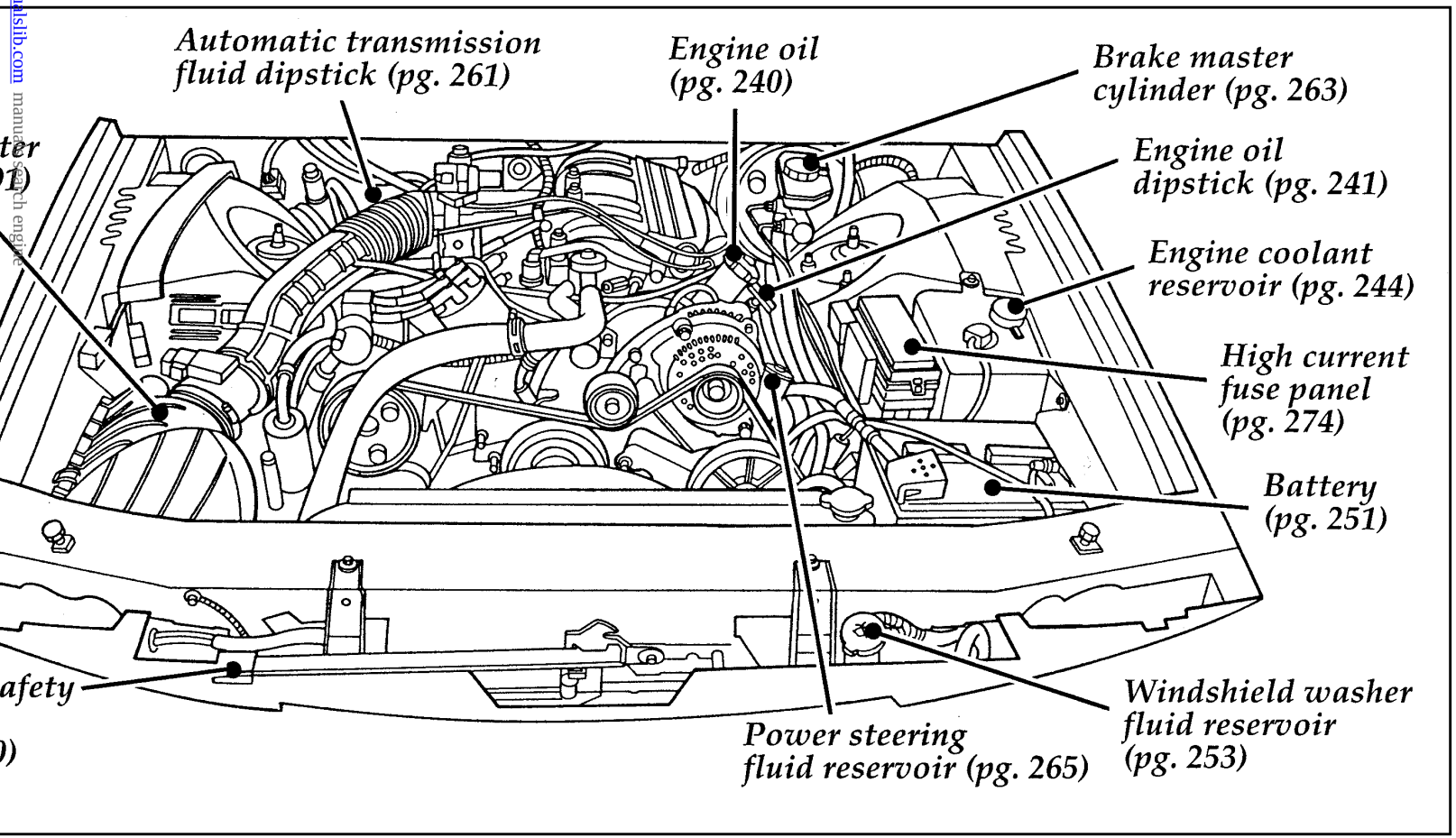

Downloaded from www.Manualslib.com

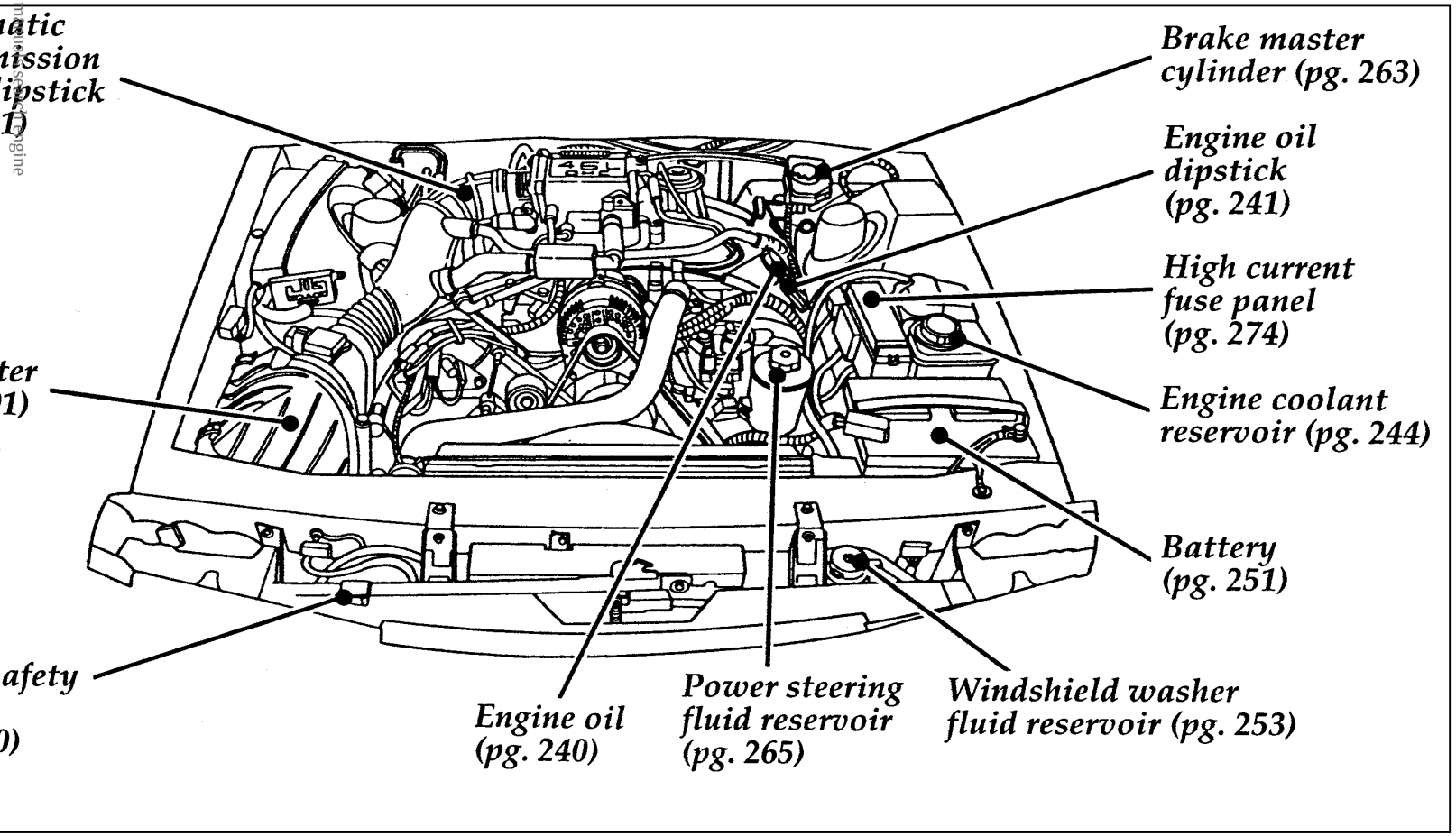

File:rcixc.ex
Update:Wed Jun 28 16:52:09 1995

Index

A

ABS warning light
(see Anti-lock brake system) 58
Accessory position on the ignition 45
Additives, engine oil 241
Air bag supplemental restraint system
description 18
disposal 25
driver air bag 18
indicator light 60
operation 21
proper seating 19
tone generator 25
wearing safety belts. 18
Air cleaner filter, location 231
Air conditioning
manual heating and air
conditioning system 74
semi-automatic temperature
control system 77
Alarm, activating remote personal 112
Antifreeze (see Engine coolant) 244
Anti-lock brake system (ABS)
description 174
see also Brake 173
warning light. 58
Anti-theft lug nuts and key 202
Anti-theft system
arming the system 106
description 104
disarming an untriggered system. . . . 108
disarming a triggered system 109
triggering 108
Assistance (see Customer assistance) . . . 205

Downloaded from www.Manualslib.com manuals search engine

Audio system
(see Electronic sound system) 131
Autolamp system (see Headlamps) 84
Automatic transmission
driving an automatic overdrive. 165
fluid, adding 262
fluid, checking 261
fluid, refill capacities 290
fluid, specifications 292
Axle, traction lok 170

B

Backing up 167
Basic vehicle warranty 3
Battery
acid, treating emergencies 187
charging system warning light 60
disconnecting 252
how to service 251
jumping a disabled battery. 187
maintenance-free 251
proper disposal, recycling 252
replacement, specifications 291
voltage gauge. 69
when storing your vehicle 295
Brake fluid
brake warning light 57
specifications 292
Brakelamp
bulb replacement 284
high-mount brakelamp 282
Brakes
adjustment 173
anti-lock 174
anti-lock brake system (ABS)
warning light. 58
applying the brakes 173
brake warning light 57

Downloaded from www.Manualslib.com manuals search engine

fluid, checking and adding 263
fluid, refill capacities 290
fluid, specifications 292
front disc 173
new brake linings. 4
noise 174
parking 175
trailer 184
when storing your vehicle 295
Brake-shift interlock 166
Break-in period 4
Bulbs, replacing
headlamps 280
specifications 284

C

Canada, customer assistance 214
Canadian Motor Vehicle Arbitration
Plan (CAMVAP) 214
Capacities for refilling fluids 290
Carbon monoxide in exhaust 51
Car seats for children
(see Child safety seats) 27
Cassette tape player (see Electronic
sound system) 141, 150
Catalytic converter 285
CD player (see Electronic sound system) . 131
Chains, tires 260
Changing a tire 193
Charging system gauge 69
Charging system warning light 60
Child safety restraints 25
child safety belts 43
child safety seats 27
Child safety seats
and air bags 20, 27
automatic locking mode (retractor) 29
in front seat 29
in rear outboard seat 35
in rear seat. 42

Downloaded from www.Manualslib.com manuals search engine

Chime
key in ignition 46
safety belt 59
Circuit breakers
checking and replacing 278
see also fuses 269
Cleaning your vehicle
chrome and aluminum parts 6
engine compartment. 234
exterior 5
exterior lamps 84
fabric 123
headlamps 84
instrument panel 74
instrument panel lens 90
interior lamps. 89
mirrors. 124
plastic parts 6
polishing 6
rustproofing 6
safety belts 18
tail lamps 84
upholstery and interior trim 123
washing 5
wheels 261
Climate control system
air conditioning 74, 77
heating. 74, 77
Clock. 89
Cold engine starting 48
Compact disc radio
(see Electronic sound system) 132
Console, description 127
Coolant (see Engine coolant)
checking and adding 244
drain and flush 248
preparing for storage 295

Downloaded from www.Manualslib.com manuals search engine

Coolant (see Engine coolant) (continued)
proper solution 246
refill capacities 290
refill procedure 248
specifications 292
temperature gauge 66
Cooling fan 228
Cruise control (see Speed control) 97
Customer Assistance Center,
Ford (U.S.) 208
Customer Assistance Centre,
Ford of Canada 208

D

Dashboard (see Instrument panel) 73
Daytime running light system 82
Defrost
rear window 81
windshield 75, 79
Dipstick, automatic transmission fluid . . . 262
Dispute Settlement Board 209
Doors
door ajar warning light 71
lubricant specifications 292
Driving under special conditions
bad weather 177
heavy load 179
high water 178
slippery roads 177
towing a trailer 181

E

Electrical system
circuit breakers 278
fuses 269
operating when the engine is off 45
Electronic sound system
radio reception 161
tuning the radio 133, 152
warranty and service information . . . 164

Downloaded from www.Manualslib.com manuals search engine

File:rcixc.ex
Update:Wed Jun 28 16:52:09 1995

Electronic stereo cassette radio
(see Electronic sound system) 142
Emergencies, roadside
assistance. 205
battery acid spills 187
jump-starting 187
towing 203
Emergency brake (parking brake) 175
Emission control system, catalytic
converter 285
Engine
check engine warning light 63
does not start 49
fuel injected engine, starting 47
fuel pump shut-off switch 53
preparing to start 47
service points 231
starting. 48
starting after a collision 53
storing your vehicle 294
Engine block heater 50
Engine coolant
checking and adding 244
checking hoses 245
disposal 248
low coolant warning light 72
preparing for storage 295
proper solution 246
recovery reservoir 244
refill capacities 290
specifications 292
Engine coolant temperature gauge
description 66
mechanical 66
Engine fan 228
Engine oil
changing oil and oil filter 243
checking and adding 241
dipstick 241
disposal 243

Downloaded from www.Manualslib.com manuals search engine

Engine oil (continued)
engine oil pressure gauge 69
filter, specifications 291
refill capacities 290
specifications 292
synthetic oil 241
“break-in” oils 5
viscosity 241
Entry system
illuminated. 103
remote. 110
Exhaust fumes 51
Extended Service Plan, Ford 4

F

Federal Communications Commission. . . 163
Flashers, hazard. 94
Flashing the lights. 92
Flat tire 193
Floor mats 129
Fluid refill capacities 290
Ford Customer Assistance Center. 208
Ford Dispute Settlement Board 209
Ford Extended Service Plan 4
Ford Motor Company of Canada 214
Ford of Canada Customer
Assistance Centre. 214
Foreign registration 215
French owner guides, how to obtain 3
Fuel
capacity 290
filling your vehicle with fuel. 234
filter, specifications 291
fuel gauge 65
low fuel warning light 72
storing your vehicle. 294
Fuel cap, removing 234

Downloaded from www.Manualslib.com manuals search engine

Fuel filter, specifications 291
Fuel gauge 65
Fuel pump shut-off switch, starting after a
collision 53
Fuse panels
engine compartment. 274
high current fuse panel 275
instrument panel 269
Fuses
charts 271
checking and replacing 277
circuit breakers 278

G

Gas cap (see Fuel cap) 234
Gasoline (see Fuel). 235
Gauges, Mechanical
engine coolant temperature gauge 66
engine oil pressure gauge 69
fuel gauge 65
multi-gauge 62
odometer. 67
speedometer 67
tachometer 68
trip odometer. 68
GAWR (Gross Axle Weight Rating)
calculating 180
definition. 179
location 179
Gearshift
automatic operation 165
console-mounted 167
positions 165
shift-lock 166

Downloaded from www.Manualslib.com manuals search engine

GVWR (Gross Vehicle Weight Rating)
calculating 180
definition 179
location 179

H

Hazard flashers 94
Headlamps
autolamp system 84
bulb specification 284
checking alignment 279
cleaning 84
daytime running lights 82
flashing 92
high beam 92
replacing bulbs 279
turning on and off 83
Head restraints 118
Heating
manual heating and air conditioning
system 74
semi-automatic system 77
High beams, indicator light 62
High-mount brakelamp
description 282
replacing the bulb 283
Hitch 183
Hood
latch location 230
lubrication specifications. 292
release lever 230
Horn. 95
Hoses, checking 245

Downloaded from www.Manualslib.com manuals search engine

I

Identification Number, Vehicle (VIN) . . . 208
Idle
  relearning 252
  speed 49
Ignition
  chime 46
  positions of the ignition 45
  removing the key 46
Indicator lamp module. 71
Infant seats (see Safety seats) 27
Instrument cluster, mechanical 56
Instrument panel
  cleaning 90
  lighting up panel and interior 86
  location of components 73
Interval wipers 93

J

Jack
  operation. 197
  positioning 199
Jump-starting your vehicle
  attaching cables 189
  disconnecting cables 192

K

Keys
  key in ignition chime 46
  positions of the ignition 45
  removing from the ignition 46
  stuck in lock position 46

Downloaded from www.Manualslib.com manuals search engine

L

Lamps
bulb replacement specifications chart . . 284
checking 279
courtesy lamps 89
daytime running light system 82
dome lamps 88
flashing the lamps 92
hazard flashers 94
headlamps 83
high beams 92
high-mount brakelamp 282
illuminated entry system 103
illuminated mirrors 126
interior lamps 86
map lamps. 88
replacing bulbs 279
trailer 184
Lane change indicator (see Turn signal) . . . 91
Lap belts 16
Lights, warning and indicator
air bag. 60
anti-lock brakes (ABS). 58
brake 57
charging system 60
check engine 63
check gauges 62
door ajar. 71
high beam 62
low coolant 72
low fuel 62, 72
low washer fluid 72
overdrive off 61
safety belt 59
turn signal indicator 65

Downloaded from www.Manualslib.com manuals search engine

Load limits
GAWR 179
GVWR 179
trailer towing 181
Lubricant specifications 292
Luggage compartment 128
Lug nuts
anti-theft 202
tightening sequence 200

M

Maintenance (see Servicing) 227
Map pockets 127
Master cylinder, brakes 263
Mirrors
rearview 124
side view mirrors (power) 124
vanity mirror, illuminated 126
Moon roof 115
Motorcraft parts 291

N

National Highway Traffic
Safety Administration 213

O

Odometer
description 67
trip odometer 68
Oil filter 291
Oil (see Engine oil) 240
Oil viscosity 241
On-board diagnostic (OBD II) system . . . 287
Overdrive. 168

Downloaded from www.Manualslib.com manuals search engine

P

Panic alarm feature,
remote entry system 112
Parking brake
operation 175
warning light. 57
Parts (see Motorcraft Parts) 291
PCV valve, specifications 291
Phone, cellular 90
Power distribution box (see Fuses) 269
Power door locks 101
Power features
door locks 102
mirrors 124
moon roof 115
seats. 121
windows. 114
Power steering
dipstick 266
driving with power steering 173
fluid, checking and adding 265
fluid, refill capacity 290
fluid, specifications 292

R

Radio (see Electronic sound systems) . . . 131
Rear window, defroster 81
Refill capacities for fluids 290
Relays 269
Remote control, trunk 128
Remote entry system
locking/unlocking doors 111
opening the trunk 111
panic alarm 112
replacement/additional transmitters . . 113
replacing the batteries. 112

Downloaded from www.Manualslib.com manuals search engine

Restraints, safety (see Safety restraints)
adult 7
child 25
head 118
infant 25
Roadside assistance 205
Roadside emergencies 187
Rotating the tires 256

S

Safe driving tips. 177
Safety belts (see Safety restraints) 7
Safety chains, when towing a trailer. . . . 183
Safety defects, reporting 213
Safety restraints
adjusting the safety belts. 10, 12, 16
automatic locking mode (retractor) 10
center rear lap belt 16
cleaning the safety belts 18
extension assembly 17
for children. 25
for infants 25
for pregnant women. 14
replacement 17
warning light and chime. 59
Safety seats for children
and air bags 20
attaching with tether straps 27
automatic locking mode (retractor) 29
in center seating positions 42
in front seat 29
in rear outboard 35
tether anchorage hardware. 27
Seats
adjusting the seat, manual 118
adjusting the seats, power 121
child safety seats 27
cleaning upholstery 123

Downloaded from www.Manualslib.com manuals search engine

Seats (continued)
head restraints 118
rear seat access 123
reclining the seat 120
sport seat 122
Serial number (VIN). 208
Service concerns 207
Servicing your vehicle, precautions when servicing 228
Shift-lock system 166
Side mirrors, adjusting. 124
Sliding moon roof (see Moon roof) 115
Snow tires and chains 260
Spare tire
changing the tire 196
finding the spare 195
removing the spare tire 195
temporary spare 193
Spark plugs, specifications 291
Specification chart, lubricants. 292
Speed control
accelerating 99
canceling a set speed 100
resetting 99
resuming a set speed 100
turning off 100
when towing a trailer 185
Speedometer 67
Starting your vehicle
preparing to start your vehicle. 47
starting a cold engine 48
starting after a collision 53
starting a warm engine 48
Steering, power 173
Steering wheel
horn. 95
locking 45
speed controls 97
tilting 96

Downloaded from www.Manualslib.com manuals search engine

Storage compartments
  center console. 127
  map pockets 127
Storing your vehicle 293
Sun visor 126
Supplemental air bag readiness light 60
Supplemental Restraint System (SRS) 18

T

Tachometer 68
Tail lamps
  bulb replacement 284
  cleaning 84
Temperature control
  (see Climate control) 74
Tether anchor installation
  (see Child restraints) 27
Tilt steering wheel. 96
Tires
  changing 193
  checking the pressure 255
  cleaning 261
  replacing 257
  rotating 256
  snow tires and chains 260
  storing your vehicle 296
  tire grades 258
  treadwear 258
  wear bands. 257
Towing a trailer (see Trailer towing) . . . 181
Towing your vehicle, with a tow truck . . 203
Traction assist. 171
Traction-lok rear axle 170
Trailer towing
  calculating maximum trailer weight. . . 182
  safety chains 183
  tips 185
  trailer brakes 184
  trailer lamps 184

Downloaded from www.Manualslib.com manuals search engine

Transmission
automatic operation 165
fluid, checking and adding
(automatic) 261
fluid, refill capacities 290
lubricant specifications 292
Transmission control switch 168
Transmitter (see Remote entry) 110
Trip odometer 68
Trunk
remote release lever. 128
using the keys to open 128
using the remote entry system
to open 111
Tune-up specifications (VECI) 287
Turn signal
indicator lights 65
lever 91

U

Used engine oil, disposal 243

V

Vanity mirror. 126
Variable interval wipers 93
VECI (Vehicle Emission Control Information)
decal 287
Vehicle Identification Number (VIN) . . . 208
Vehicle loading
automatic transmissions 179
calculating the load 180
Vehicle storage 293
Ventilating your vehicle
(see Climate control) 76, 80
Viscosity (see Engine oil) 241
Visor (see Sun visor) 126

Downloaded from www.Manualslib.com manuals search engine

W

Warm engine, starting 48
Warning chimes
  key in ignition 46
  safety belt 59
Warranties, radio 164
Warranty Information Booklet 3
Washer fluid
  reservoir 253
  warning light 72
Weight limits (GAWR, GVWR) 179
Wheels
  anti-theft lugnuts 202
  cleaning 261
  covers 201
  inspection and maintenance 255
  ornaments 200
Windows
  power windows, operating 114
  rear, defrosting 81
Windshield washer fluid and wipers
  checking and adding fluid 253
  checking and replacing wiper blades . . 254
  low washer fluid light 72
  operation 92
  reservoir 253
  specifications 253

Downloaded from www.Manualslib.com manuals search engine

Service Station Information

Engine	3.8L SFI	4.6L SFI OHC V8
Fuel	UNLEADED FUEL ONLY — Octane 87	
Fuel Tank Capacity	18.0 gallons (68.1 Liters)	
Tire Size	See tire pressure decal below the right door jamb	
Tire Pressure	See tire pressure decal below the right door jamb	
Hood Release	Pull handle under left side of dash	
Engine Oil	Use only engine oil displaying the American Petroleum Certification Mark — 5W-30 preferred	
Engine Oil Capacity w/filter	5.3 quarts (5.0 Liters)	
Automatic Transmission	Motorcraft Mercon® (ATF) 13.9 quarts (13.1 Liters)	
Power Steering Fluid	Use only power steering fluid that meets Ford's Specification Motorcraft Mercon® (ATF) .	
Engine Coolant	12.6 quarts (11.9 Liters)	14.1 quarts (13.3 liters)

Downloaded from www.Manualslib.com manuals search engine