GMC

2021

6.6L Duramax Diesel Engine Supplement

Contents

Introduction 1
Instruments and Controls 3
Driving and Operating 11
Vehicle Care 44
Service and Maintenance 59
Technical Data 67
Index. 70

Litho in U.S.A.
Part No. 84557035 C Third Printing

Introduction

The names, logos, emblems, slogans, vehicle model names, and vehicle body designs appearing in this manual including, but not limited to, GM, the GM logo, CHEVROLET, GMC, the CHEVROLET and GMC Truck Emblems, SILVERADO, SIERRA, DENALI, and Duramax are trademarks and/or service marks of General Motors LLC, its subsidiaries, affiliates, or licensors.

For vehicles first sold in Canada, substitute the name “General Motors of Canada Company” for GMC and Chevrolet Motor Division wherever it appears in this manual.

This manual describes features that may or may not be on the vehicle because of optional equipment that was not purchased on the vehicle, model variants, country specifications, features/applications that may not be available in your region, or changes subsequent to the printing of this owner’s manual.

Refer to the purchase documentation relating to your specific vehicle to confirm the features.

This manual contains information that pertains to the operation of your diesel engine. It also contains your Diesel Maintenance Schedule. The sections in this manual correspond to the sections in your owner’s manual. This manual, along with your owner’s manual, will assist you in the proper use and maintenance of your vehicle.

Keep this manual in the vehicle for quick reference.

Canadian Vehicle Owners

A French language manual can be obtained from your dealer, at www.helminc.com, or from:

Propriétaires Canadiens

On peut obtenir un exemplaire de ce guide en français auprès du concessionnaire ou à l'adresse suivante:

Helm, Incorporated
Attention: Customer Service
47911 Halyard Drive
Plymouth, MI 48170
USA

©2021 General Motors LLC. All Rights Reserved.

Using this Supplement

This supplement contains information specific to the unique components of the vehicle. It does not explain everything you need to know about the vehicle. Read this supplement along with the owner’s manual to learn about the vehicle's features and controls.

Index

A good place to look for what you need is the Index in the back of this supplement. It is an alphabetical list of what is in the supplement, and the page number where you will find it.

Instruments and Controls

Warning Lights, Gauges, and Indicators
Instrument Cluster 3
Malfunction Indicator Lamp (Check Engine Light) 6
Wait-to-Start Light 7
Diesel Exhaust Fluid (DEF) Warning Light 8
Power Take-Off Light 8

Information Displays
Driver Information Center (DIC) 8

Vehicle Personalization
Vehicle Personalization 9

Warning Lights, Gauges, and Indicators

Instrument Cluster

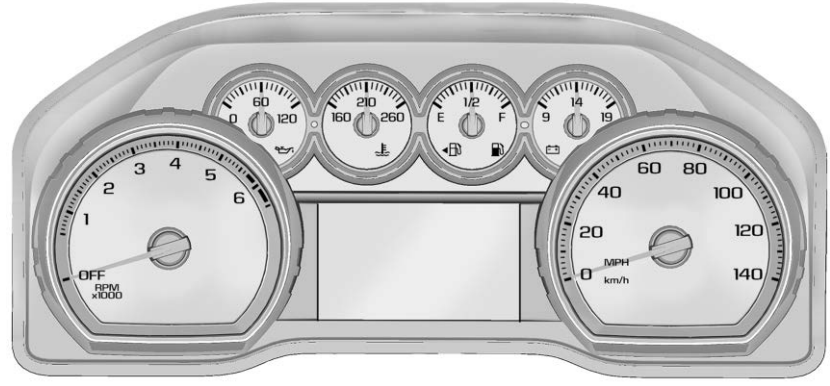

Base Level Chevrolet English Cluster Shown, Metric Similar

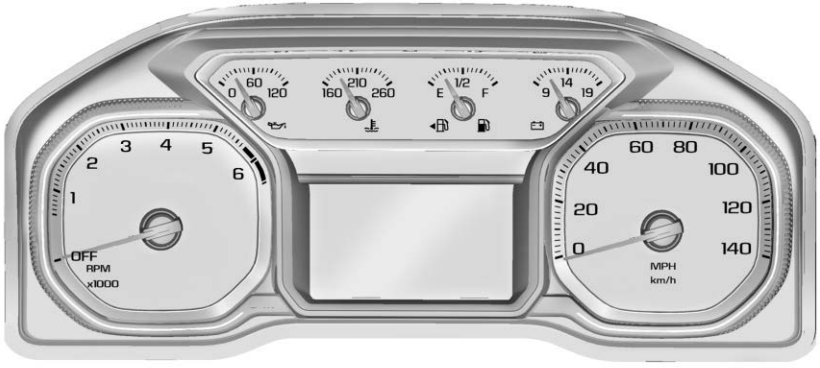

Base Level GMC English Cluster Shown, Metric Similar

Uplevel Chevrolet English Cluster Shown, Metric Similar

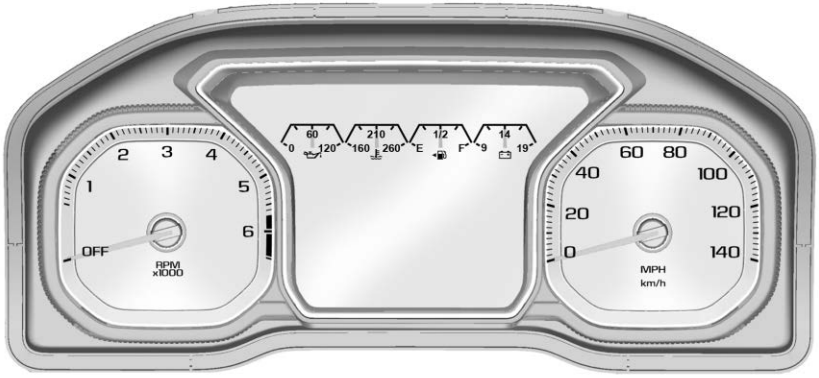

Uplevel GMC English Cluster Shown, Metric Similar

Malfunction Indicator Lamp (Check Engine Light)

This light is part of the vehicle's emission control on-board diagnostic system. If this light is on while the engine is running, a malfunction has been detected and the vehicle may require service. The light should come on to show that it is working when the ignition is on with the engine not running. See "Ignition Positions" in the owner's manual.

This light may also come on when the system has detected a problem with the Diesel Exhaust Fluid (DEF) management system. See *Diesel Exhaust Fluid* ⇨ *18*.

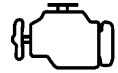

Malfunctions are often indicated by the system before any problem is noticeable. Being aware of the light and seeking service promptly when it comes on may prevent damage.

Caution

If the vehicle is driven continually with this light on, the emission control system may not work as well, the fuel economy may be lower, and the vehicle may not run smoothly. This could lead to costly repairs that might not be covered by the vehicle warranty.

Caution

Modifications to the engine, transmission, exhaust, intake, or fuel system, or the use of replacement tires that do not meet the original tire specifications, can cause this light to come on. This could

(Continued)

Caution (Continued)

lead to costly repairs not covered by the vehicle warranty. This could also affect the vehicle's ability to pass an Emissions Inspection/Maintenance test. See *Accessories and Modifications* ⇨ *44*.

When the light is on, a malfunction has been detected. Diagnosis and service may be required.

Poor fuel quality can cause inefficient engine operation and poor driveability, which may go away once the engine is warmed up. If this occurs, change the fuel brand. It may require at least one full tank of the proper fuel to turn the light off. See *Fuel for Diesel Engines* ⇨ *22*.

If the light remains on, see your dealer.

Emissions Inspection and Maintenance Programs

If the vehicle requires an Emissions Inspection/Maintenance test, the test equipment will likely connect to the vehicle's Data Link Connector (DLC).

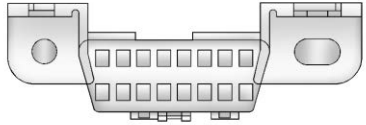

The DLC is under the instrument panel to the left of the steering wheel. Connecting devices that are not used to perform an Emissions Inspection/Maintenance test or to service the vehicle may affect vehicle operation. See "Add-On Electrical Equipment" in the owner's manual. See your dealer if assistance is needed.

The vehicle may not pass inspection if:

- The light is on when the engine is running.
- The light does not come on when the ignition is on with the engine not running.
- Critical emission control systems have not been completely diagnosed. If this happens, the vehicle would not be ready for inspection and might require several days of routine driving before the system is ready for inspection. This can happen if the 12-volt battery has recently been replaced or run down, or if the vehicle has recently been serviced.

See your dealer if the vehicle will not pass or cannot be made ready for the test.

Wait-to-Start Light

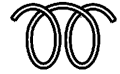

This light comes on briefly while starting the engine, as a check to show the light is working.

If the wait-to-start light comes on, the glow plug system is required and operating. Wait until the light turns off before starting the engine. This light may not come on in warm temperatures.

The fast warm-up glow plug system makes the wait-to-start light stay on for a shorter amount of time than most diesel engines.

See *Starting the Diesel Engine* ⇨ *11*.

Diesel Exhaust Fluid (DEF) Warning Light

This light, a Driver Information Center (DIC) message, and a chime come on when there is an issue with the Diesel Exhaust Fluid.

If the DEF level has not been corrected, the light will continue to flash when the vehicle is started. The vehicle's speed may also be limited.

See *Diesel Exhaust Fluid* ⇨ *18*.

Power Take-Off Light

Chassis Cab

The vehicle may have a Power Take-Off (PTO) light. Under normal operating conditions, the PTO light will remain on throughout the PTO operating cycle. If all conditions required to engage PTO have not been met when enabling PTO, the PTO light will turn on, then turn off after one second. See *Power Take-Off (PTO)* ⇨ *29*.

Information Displays

Driver Information Center (DIC)

The DIC is in the instrument cluster. The DIC comes on when the ignition is on.

A Duramax diesel vehicle may have the following additional DIC menu items:

DEF : Displays the Diesel Exhaust Fluid (DEF) level as a bar graph with individual segments that illuminate from Empty (E) to Full (F). When LOW appears on the display and the segments turn red, add DEF as soon as possible. For a guide on how much DEF to add, see *Diesel Exhaust Fluid* ⇨ *18*.

Fuel Filter Life Remaining : This display shows an estimate of the fuel filter's remaining useful life. If 90% Fuel Filter Life Remaining is displayed, it means 90% of the current fuel filter life remains. The fuel filter life system will alert when to change the fuel filter on a schedule consistent with your driving conditions.

When the remaining fuel filter life is low, the CHANGE FUEL FILTER message will appear on the display. Change the fuel filter as soon as possible.

Fuel Filter Life Reset : Reset the Fuel Filter Life Remaining display after each fuel filter change. It will not reset itself. Also, be careful not to reset the display at any time other than when the fuel filter has just been changed because it cannot be reset accurately until the next fuel filter change. The fuel filter life will change to 100% when the system has been reset. To reset the system, press and hold the thumbwheel for two seconds while Fuel Filter Life Remaining is displayed on the DIC.

Engine Air Filter Life : Displays an estimate of the engine air filter's remaining useful life and the state of the system. Engine Air Filter Life 95% means 95% of the current air filter life remains. Messages will display based on the engine air filter life and the state of the system. When the REPLACE AT NEXT OIL CHANGE message displays, the engine air filter should be replaced at the time of the next oil change. When the

REPLACE SOON message displays, the engine air filter should be replaced at the earliest convenience. The Air Filter Life display must be reset after the engine air filter replacement. To reset, see *Engine Air Filter Life System* ⇨ *49*.

Vehicle Personalization

Use the audio system controls to access the personalization menus for customizing vehicle features.

The following features may be available on some vehicles with a diesel engine. See "Vehicle Personalization" in the owner's manual for additional vehicle personalizations.

If equipped, these features may be selected using the infotainment display.

To access the vehicle personalization menu:

1. Touch the Settings icon on the Home Page of the infotainment display.
2. Touch Vehicle to display a list of available options.
3. Touch to select the desired feature setting.
4. Touch ◯ or | to turn a feature off or on.
5. Touch ✕ to go to the top level of the Settings menu.

Climate and Air Quality

Select and the following may display:

- Rapid Heat-Elevated Idle

Rapid Heat-Elevated Idle

This allows the feature to be turned on and off. See "Elevated Idle" in *Starting the Diesel Engine* ⇨ *11*.

Select Off or On.

Power Take-Off (PTO) (If Equipped)

There may be additional features that can be customized for the PTO. See *Power Take-Off (PTO)* ⇨ *29*. See your dealer to enable these features.

Select and the following may display:

- Standby Speed
- Set 1 Speed
- Set 2 Speed
- Tap Step Speed
- Shutdown Time

STANDBY SPEED

This feature allows for modifying the PTO Standby Speed.

Select the desired setting.

SET 1 SPEED

This feature is available if the vehicle is configured for stationary preset PTO, and allows the selection of the PTO set 1 speed.

Select the desired PTO Standby Set 1 setting.

SET 2 SPEED

This feature is available if the vehicle is configured for stationary preset PTO, and allows the selection of the PTO set 2 speed.

Select the desired PTO Standby Set 2 setting.

TAP STEP SPEED

This feature is available if the vehicle is configured for stationary variable or mobile PTO, and allows the selection of the PTO tap step speed.

Select the desired PTO Tap Step Speed setting.

SHUTDOWN TIME

This feature is available if the vehicle is configured for stationary preset or stationary variable PTO, and allows the selection of the PTO shutdown time.

Select the desired PTO Shutdown Time setting.

Driving and Operating

Starting and Operating
Starting the Diesel Engine 11
Winter Cover 14
Engine Heater 17

Diesel Particulate Filter
Diesel Particulate Filter 17

Diesel Exhaust Fluid
Diesel Exhaust Fluid 18

Brakes
Exhaust Brake 21

Fuel
Top Tier Fuel 21
Fuel Additives 22
Fuel for Diesel Engines 22
Biodiesel 23
Cold Weather Operation 23
Water in Fuel 24
Running Out of Fuel 26
Fuel Filter Replacement 26
Filling the Tank 27
Filling a Portable Fuel Container 28

Trailer Towing
Trailer Towing 28

Conversions and Add-Ons
Power Take-Off (PTO) 29

Starting and Operating

Starting the Diesel Engine

The diesel engine starts differently than a gasoline engine.

Caution
If the steering wheel is turned until it reaches the end of its travel, and is held in that position while starting the vehicle, damage may occur to the hydraulic power steering system and there may be loss of power steering assist.

Move the shift lever to P (Park) or N (Neutral). To restart the engine when the vehicle is already moving, use N (Neutral) only.

Caution
Do not try to shift to P (Park) if the vehicle is moving. If you do, you could damage the transmission. Shift to P (Park) only when the vehicle is stopped.

Starting the Engine

1. Turn the ignition key to ON/RUN.

Observe the wait-to-start light. See *Wait-to-Start Light* ⇨ *7*. This light may not come on if the engine is warm.

2. If the wait-to-start light is on, wait until this light goes off. Turn the ignition key to START, then release the ignition key. The engine will continue to crank until the engine starts.

   The engine has a fast warm-up glow plug system. The wait-to-start light will illuminate for a much shorter time than most diesel engines, due to the rapid heating of the glow plug system.

Caution
If the wait-to-start light stays on after starting the vehicle, the vehicle may not run properly. Have the vehicle serviced right away.

3. If the engine does not start after 15 seconds of cranking, turn the ignition off. Wait one minute for the cranking motor to cool, then try the same steps again.

If you are trying to start the engine after you have run out of fuel, follow the steps in *Running Out of Fuel* ⇨ *26*.

When the engine is cold, let it run for a few minutes before driving. This lets oil pressure build up. The engine will sound louder when it is cold.

For turbo protection, engine power at speeds above idle may be limited if the engine is cold. This protection can last up to 40 seconds at extreme cold coolant and ambient temperatures.

Cold Weather Starting

Use the recommended engine oil when the outside temperature drops below freezing. See *Engine Oil* ⇨ *46*. When the outside temperature drops below –18 °C (0 °F), use of the engine coolant heater is recommended.

If you experience longer cranking times, notice an unusual amount of exhaust smoke, or are at higher elevations (over 2 135 m or 7,000 ft), you may use the engine coolant heater. See *Engine Heater* ⇨ *17*.

See *Fuel for Diesel Engines* ⇨ *22* for information on what fuel to use in cold weather.

If the Diesel Engine Will Not Start

If the vehicle runs out of fuel, see *Running Out of Fuel* ⇨ *26*.

If the vehicle is not out of fuel, and the engine will not start:

Turn the ignition key to ON/RUN. After the wait-to-start light goes off, turn the ignition key to START.

If the light does not go off, wait a few seconds, then try starting the engine again. See your dealer as soon as you can for a starting system check.

If the light comes on and then goes off and you know the batteries are charged, but the engine still will not start, the vehicle needs service.

If the light does not come on when the engine is cold, the vehicle needs service.

If the batteries do not have enough charge to start the engine, see “Battery” in the owner’s manual.

Check that the correct engine oil has been used and changed at appropriate intervals. If the wrong oil is used, the engine may be harder to start.

Be sure you are using the proper fuel for existing weather conditions. See *Fuel for Diesel Engines* ⇨ *22*.

If the engine starts, runs a short time, then stops, the vehicle needs service.

⚠ Warning

Do not use gasoline or starting aids, such as ether, in the air intake. They could damage the engine, which may not be covered by the vehicle warranty. They could also cause a fire, which could cause serious personal injury.

Engine Idle Variations

Under certain conditions the engine idle speed can vary or be elevated. Change in idle speed is normal and does not indicate a problem. Normal conditions that can raise idle speed are low voltage, DPF regeneration, air conditioning compressor loads, and engine warmup. These speeds can range from approximately 600 to 1000 rpm.

Elevated Idle

The engine has a cold temperature high idle feature which elevates the engine idle speed from base idle to 1050 to 1100 rpm when outside temperatures are below 0 °C (32 °F), and the engine coolant temperature is below 65 °C (150 °F). This feature enhances heater performance by raising the engine coolant temperature faster.

To turn this feature on or off, see *Vehicle Personalization* ⇨ *9*.

When the engine is started, it will slowly ramp up to the high idle speed after a delay of a few seconds up to approximately two minutes. For this method to work properly there must be no throttle or brake pedal faults.

The engine idle speed will return to normal once the following conditions are met:

- Engine coolant temperature reaches 65 °C (150 °F).
- Air intake temperature reaches 0 °C (32 °F).

The high idle speed will be temporarily interrupted and the engine speed will return to normal if any of the following conditions occur:

- The brake pedal is applied.
- The accelerator pedal is pressed.
- The transmission is shifted out of P (Park) or N (Neutral).
- Vehicle speed is detected.

Once these inputs are removed, the engine idle speed will slowly ramp back up to high idle after the normal delay, if the conditions for engine coolant temperature and air intake temperature are still met.

Fast Idle Control

If equipped, this system can be used to increase the engine idle speed.

Fast Idle control will be enabled when the following conditions are met:

- The parking brake is set.
- The transmission is in P (Park) or N (Neutral).
- The vehicle speed is about 0 km/h (0 mph).
- The cruise control Set switch is pressed and released for Preset Fast Idle Speed (1200 rpm).

Fast Idle control will be disabled when one or more of the following conditions occur:

- The cruise control Set switch is pressed and released. See “Cruise Control” in the owner’s manual.
- The cruise control Cancel switch is pressed.
- The brake pedal is pressed.

- The transmission is shifted out of P (Park) or N (Neutral).
- The parking brake is released.
- The vehicle speed is not 0 km/h (0 mph).

Winter Cover

If equipped, the winter cover should be used to enhance heater performance in cold conditions below -5 °C (23 °F). The winter cover installs over the grille and restricts airflow to the engine compartment.

For vehicles that did not come with a winter cover, a GM winter cover can be purchased. See your dealer for additional information.

When the winter cover is in use, the heater, ventilation, and air conditioning AUTO mode may not function properly. Use the manual settings for comfort.

Usage Guidelines

The winter cover should only be used while operating the vehicle in cold temperatures or in heavy snow. In these temperatures, the vehicle does not need a large amount of air to properly cool the engine. When more airflow is required to cool the vehicle, the winter cover should not be used. The following usage guidelines will allow adequate airflow for proper radiator and air cooler performance:

- Do not use the winter cover if towing a trailer in conditions above 0 °C (32 °F). The vehicle may overheat if the radiator is covered while towing.
- Do not use the winter cover if a snow plow is mounted on the truck.

- Do not cover the opening in the front bumper.
- Do not modify the cover. The winter cover does not cover some sections of the front of the vehicle to provide enough airflow.
- When the winter cover is used, the outside air temperature display may not function properly.
- Keep the underside of the winter cover as clean as possible. Remove monthly or as necessary and clean away dust and debris.
- Use only a mild soap to clean. Do not use harsh soap, strong detergents, or vinyl protectant/sealant type products as they may damage the special finish. Allow the winter cover to dry completely before reinstalling.

Installation Instructions

When first trying to fit the cover, it may appear to be undersized but will stretch during installation to ensure a tight fit. The initial installation of the cover is best performed when the winter cover is warm.

Installation (Chevrolet Pickup)

1. The white label must be at the top and back of the cover.

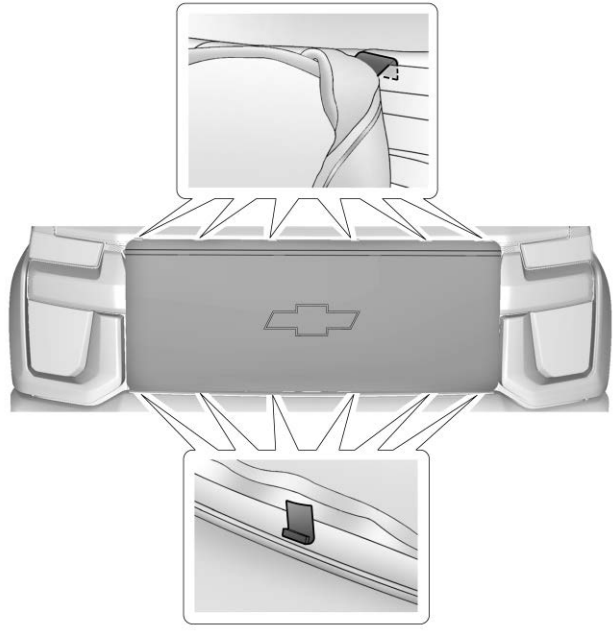

2. Starting in the middle, attach fastening points as illustrated.
3. To remove, reverse the steps listed previously.

Installation (GMC Pickup)

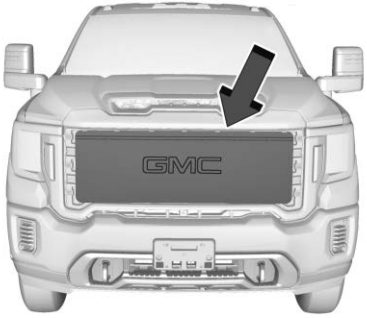

1. The white label must be at the top and back of the cover.

2. Starting in the middle, attach fastening points as illustrated.
3. To remove, reverse the steps listed previously.

Engine Heater

⚠ Warning

Do not plug in the engine block heater while the vehicle is parked in a garage or under a carport. Property damage or personal injury may result. Always park the vehicle in a clear open area away from buildings or structures.

If equipped, the engine heater can provide easier starting in cold weather conditions at or below −18 °C (0 °F).

For engine heater operation, see "Engine Heater" in the owner's manual.

Diesel Particulate Filter

The exhaust system has a Diesel Particulate Filter (DPF) to reduce vehicle emissions. On some exhaust systems with a DPF, the exhaust cooler mixes air with the exhaust to lower the temperature before it leaves the tailpipe.

The DPF, the tailpipe, and other exhaust system components must not be altered. Inspect regularly and clean any mud or dirt from the exhaust cooler, especially where the exhaust cooler connects to the tailpipe and the openings where fresh air enters the cooler.

The DPF will clean itself as part of normal operation. Several factors including fuel consumed, hours of engine operation, and miles driven are monitored by the Engine Control Module (ECM). The self-cleaning occurs approximately once per tank of fuel.

Vehicles with the DPF have specific fuel and engine oil requirements. See *Fuel for Diesel Engines* ⇨ *22* and *Engine Oil* ⇨ *46*.

Caution

Damage can occur to the DPF components if the required Ultra Low Sulfur Diesel (15 ppm sulfur maximum) fuel and engine oil specified in the Recommended Fluids and Lubricants section of this manual are not used. This damage would not be covered by the vehicle warranty.

Under certain conditions, such as idling or very short trips, the self-cleaning process has less efficiency and cannot be completed.

To resolve this, continue driving safely at a steady speed as close to the posted speed limit as possible, preferably without stopping, until the message turns off. This can take up to 30 minutes.

⚠ Warning

During DPF self cleaning or during extended idling in P (Park), the exhaust system and exhaust gases are very hot. Things that burn could touch hot exhaust parts under the vehicle and ignite. You or others could be burned. Do not park, or idle for an extended period of time, near or over papers, leaves, dry grass, or other things that can burn. Keep the exhaust area clear of material that could ignite or burn. See "Parking over Things That Burn" in the owner's manual.

Caution

Avoid extended idling because the DPF system is not capable of self-cleaning at idle. During extended idling, monitor the instrument cluster lights and DIC for messages and take appropriate action. Continued idling with the warning light/

(Continued)

Caution (Continued)

message on could cause damage to the DPF requiring repair and possible replacement that might not be covered by the vehicle warranty.

During self-cleaning there will be a change in the exhaust sound and engine idle speed. Along with this, a burning smell and reduction in fuel economy may be noticed. This is normal.

If the vehicle is idled or driven on very short trips with the DPF warning message on and the exhaust filter is not cleaned as required, the malfunction indicator lamp and a DIC message will display. See your dealer. Also see *Malfunction Indicator Lamp (Check Engine Light)* ⇨ *6*.

See *Accessories and Modifications* ⇨ *44* if you are adding accessories or modifying the vehicle.

Diesel Exhaust Fluid

⚠ Warning

Avoid getting Diesel Exhaust Fluid (DEF) on your skin or in your eyes as it could cause irritation. For more safety, handling, and storage information, see the Diesel Exhaust Fluid container label.

Caution

Use only DEF that is GM approved, or fluid containing the API certified or ISO 22241 label. The use of other fluids could damage the system, requiring costly repairs that will not be covered by the vehicle warranty.

Caution

Do not mix fuel with DEF, and do not put DEF in the fuel tank. This could lead to costly repairs that might not be covered by the vehicle warranty.

Diesel Exhaust Fluid (DEF) is used with diesel engines to reduce the amount of regulated emissions produced. Products such as AdBlue are types of DEF. The fluid level in the DEF tank must be maintained for the vehicle to run properly. DEF is not a fuel additive. DEF freezes when exposed to temperatures below −11 °C (12 °F). For DEF tank capacity see *Capacities and Specifications* ⇨ *68*.

It is normal to hear the DEF system purge fluid back into the tank after the vehicle is shut off.

Locating Diesel Exhaust Fluid

DEF can be purchased at your authorized dealers. Additionally, some diesel truck fueling stations or retailers may have DEF for purchase. For vehicles with an active OnStar or connected services plan, OnStar can help to locate a DEF retailer. See “Customer Assistance Offices” in the owner’s manual for phone numbers to assist in contacting a GM dealer. See *Recommended Fluids and Lubricants* ⇨ *64*.

Filling the DEF Tank

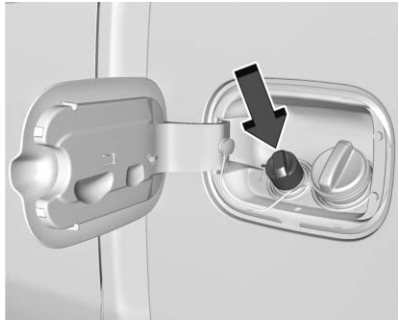

The blue DEF cap is behind the fuel/DEF door. Do not remove the fuel and DEF caps at the same time. Fill diesel fuel and DEF independently. Turn the DEF cap counterclockwise to remove.

In cold conditions DEF can freeze in the DEF fill pipe opening. If this prevents the filling of the DEF tank, place the vehicle in a warm garage overnight.

DEF Gauge Indication	Approximate minimum volume of DEF that can be added *
E 1/2 F	0 L (0 gal)
E 1/2 F	2 L (0.5 gal)
E 1/2 F	4.5 L (1 gal)
E 1/2 F	7 L (2 gal)
E 1/2 F	10 L (2.5 gal)
E 1/2 F	12.5 L (3.5 gal)
E 1/2 F	15 L (4 gal)
E 1/2 F	18 L (4.5 gal)
* Final gauge reading after fill may not illuminate all segments	

Fill the DEF tank on level ground and with the vehicle off. When adding DEF, it is recommended to fully fill the DEF tank. For DEF tank capacity see *Capacities and Specifications* ⇨ *68*. When adding DEF to an empty or very low tank, always add at least 7.5L (2 gal) of fluid to release the vehicle from speed limitation.

When fluid reaches the top of the DEF fill pipe, stop filling. Do not top off the DEF tank. If using a bottle or jug to refill DEF, follow the instructions on the container label and use a dedicated fill aid.

Caution
Do not overfill the DEF tank and do not allow DEF to contact the finished surfaces of the vehicle, as it could damage the vehicle finish. If DEF is spilled during filling, wipe any affected surface with a damp cloth.

When replacing the DEF cap, turn it clockwise until it clicks. Make sure the cap is fully installed.

Push the fuel/DEF door closed.

DEF Low

As the DEF level drops, warnings will automatically be displayed in the Driver Information Center (DIC). Select Vehicle Information in the DIC to view DEF level status. See *Driver Information Center (DIC)* ⇨ *8*.

Refill the DEF tank at the first opportunity after a low warning indication to avoid vehicle speed limitations.

It may take some time while driving for the vehicle to detect that DEF has been added. If there was a vehicle speed limitation, it will be removed gradually and it may take several kilometers/miles for the DIC message to update.

If DEF is added below −11 °C (12 °F), additional driving time may be required to remove speed limitations.

The DEF range DIC message first displays at approximately 1 600 km (1,000 mi). This message appears again at approximately 500 km (300 mi) of remaining range before the exhaust fluid tank becomes empty.

As the fluid level nears empty, these messages appear every time the vehicle is started.

If the DEF low warnings are ignored and the DEF tank becomes empty, the DIC will display messages that describe the action needed and distance until vehicle speed is limited. For the DEF warning light symbol, see *Diesel Exhaust Fluid (DEF) Warning Light* ⇨ *8*.

DEF Quality Poor

Use only DEF that is GM approved, or fluid containing the API certified or ISO 22241 label.

DEF has an expiration date. If the system detects poor quality, or contaminated or diluted DEF, a DIC message will display along with distance until vehicle speed is limited.

The speed limitation will occur in a series of steps with the final speed limitation being 8 km/h (5 mph) along with a flashing warning light and chimes.

Adding fresh DEF to the system may resolve the problem after several kilometers/miles of driving, depending on several factors. If the DIC message persists, see your dealer or additional DIC messages may display.

Service DEF System

If a problem occurs with the DEF system, a DIC message displays along with distance until vehicle speed is limited.

The speed limitation will occur in a series of steps with the final speed limitation being 8 km/h (5 mph) along with a flashing warning light and chimes.

In some cases, this message will clear itself, indicating that the DEF system was able to correct the condition. If the DIC message persists, see your dealer or additional DIC messages may display.

Service Emission System

If a problem occurs with the vehicle emission system, a DIC message displays along with distance until vehicle speed is limited. The speed limitation will occur in a series of steps with the final speed limitation of 88 km/h (55 mph) and chimes. In some cases, this message will clear itself, indicating that the emission system was able to correct the condition. If the DIC message persists, see your dealer or additional DIC messages may display.

Brakes

Exhaust Brake

The exhaust brake can be used to enhance the vehicle brake system and reduce brake lining wear.

Downshifts may be automatically selected to increase engine speed, which increases the effectiveness of the exhaust brake. The number of downshifts selected is determined by the length of time the brakes are applied and the rate the vehicle is slowing. The system delivers the correct amount of braking to assist in vehicle control. The heavier the vehicle load, the more active the engine exhaust brake will be. Use of the exhaust brake will help maintain vehicle speed when used with cruise control. See “Cruise Control” in the owner’s manual.

There still may be occasions when the brake pedal will need to be used to maintain vehicle speed.

Automatic downshifts will not occur if the vehicle is in Range Selection Mode. See “Manual Mode” in the owner’s manual.

The exhaust brake only activates when the transmission torque converter is locked. This can vary based on vehicle speed, gear, and load.

To activate the system, press EXHAUST BRAKE on the center stack.

A light in the switch will come on when the exhaust brake is activated. The switch must be pressed at each vehicle start for the system to be active.

The Driver Information Center (DIC) displays the message EXHAUST BRAKE ON for approximately three seconds, then clears.

To turn the brake off, press the exhaust brake switch a second time. The DIC displays the message EXHAUST BRAKE OFF for approximately three seconds, then clears.

The exhaust brake will be more active when in Tow/Haul Mode.

Fuel

Top Tier Fuel

GM recommends the use of TOP TIER Diesel Fuel to keep the engine clean, reduce engine deposits, and maintain optimal vehicle performance. Look for the TOP TIER Logo or see www.toptiergas.com for a list of TOP TIER Diesel Fuel marketers and applicable countries.

Fuel Additives

TOP TIER Detergent Diesel is highly recommended for use with your vehicle. If your area does not have TOP TIER Detergent Diesel, GM recommends the use of ACDelco Diesel Fuel Conditioner. This will help maintain optimal engine performance. GM does not recommend other aftermarket diesel additives.

If low-quality diesel is used for refueling, GM recommends adding ACDelco Fuel System Treatment Plus-Diesel to help clean engine deposits. This is available at your GM dealer.

Fuel for Diesel Engines

The selection of a high-quality fuel is important for maintaining optimum vehicle performance. Diesel fuel should meet or exceed the minimum requirements in the most current versions of the local fuel standards.

Do not use fuel with more than 15 ppm sulfur, commonly referred to as Ultra Low Sulfur Fuel.

Do not use a diesel blend containing more than 20% biodiesel by volume.

Caution

Use of fuel that does not comply with the required technical standards can lead to engine power loss, increased wear, or engine damage and may void your warranty.

Some improper fuels are:

- Diesel fuel with the addition of gasoline.
- Diesel fuel mixed with engine oil or automatic transmission fluid.
- Triglyceride fuels, such as raw vegetable oil or animal fat, in any form, including with blends of diesel or biodiesel.
- Marine diesel fuel and fuel oils.
- Diesel-water emulsions, such as Aquazole.
- Aftermarket diesel fuel additives, which contain alcohols, organo-metallic additives, or water emulsifiers.

Caution

If the vehicle is accidentally refueled with gasoline, do not continue driving the vehicle. Driving the vehicle will damage the fuel system. Have the vehicle towed to a qualified technician to have the gasoline removed from the tank and fuel system. Refuel with Ultra Low Sulfur Diesel fuel. It is also recommended to have the fuel system flushed with Ultra Low Sulfur Diesel, to ensure all gasoline is removed.

Some conditions, such as dirty fuel, may decrease fuel filter life and a CHANGE FUEL FILTER message may come on in the Driver Information Center (DIC).

Climate Grade Diesel Fuels

At temperatures below 0 °C (32 °F), avoid using biodiesel blends above 5% by volume. Using such a fuel may cause fuel filter plugging, system gelling, and freezing, which may adversely impact vehicle starting.

Severe winter grade diesel fuel, such as 1-D diesel fuel or Arctic grade diesel fuel, can be used in extreme cold temperatures (below −18 °C or 0 °F); however, doing so will

reduce power and fuel economy. Avoid using severe winter grade fuel in warm or hot climates. It can result in stalling, poor starting, and damage to the fuel injection system.

Fuels improperly blended for cold temperature operation may result in restricted fuel filters. The vehicle is equipped with a fuel heating system to prevent gelling or waxing of conventional diesel fuel and biodiesel blends, but may not prevent all cases.

In case of severe winter conditions, the fuel filter may become clogged by wax naturally present in the fuel. To unclog it, move the vehicle to a warm garage area and allow the filter to warm up. The fuel filter may need to be replaced. See *Fuel Filter Replacement* ⇨ *26*.

Biodiesel

Biodiesel is a renewable fuel produced from vegetable oils or animal fats that have been chemically modified to make it compatible with diesel fuel.

Caution

Do not use home-made biodiesel or home test kits because the quality cannot be verified by approved scientific methods. Do not use raw vegetable oil or other unmodified bio-oils, fats, or blends of vegetable oil with diesel. They could damage the fuel system and engine, and damages would not be covered by the vehicle warranty.

Biodiesel Blends

Fuels with a biodiesel content up to 20% by volume may be used (e.g., named B20). Only use biodiesel blends up to 20% by volume that comply with your country's or region's fuel standards.

Caution

Do not use blends containing more than 20% biodiesel. Any engine, fuel system, or exhaust after-treatment system damage would not be covered by the vehicle warranty.

As a renewable fuel, biodiesel provides some environmental benefits. However, biodiesel has unique properties and needs to be handled differently than diesel fuel. Its use presents additional risks and may not be appropriate in all situations. Certain vehicle operating modes increase these risks and should be avoided.

Biodiesel fuel quality degrades with time and exposure to high temperature quicker than Ultra Low Sulfur Diesel fuel. More frequent refueling provides the best opportunity to have a supply of fresh fuel. Storage at hot ambient temperatures will accelerate biodiesel degradation.

If the vehicle is not driven often and uses little fuel, or if it is stored for extended periods of time, avoid the use of biodiesel blended fuels above 5% by volume. When the vehicle is stored for longer than one month, it should be run out of biodiesel to below one-quarter tank, refueled with biodiesel-free fuel, and driven several kilometers (miles) before storage.

Cold Weather Operation

In cold weather, the fuel filter may become clogged by wax naturally present in the fuel. To unclog it, move the vehicle to a warm garage area and allow the filter to warm up. The fuel filter may need to be replaced. See *Fuel Filter Replacement* ⇨ *26*.

At temperatures below 0 °C (32 °F), it is recommended to avoid using biodiesel blends above 5% blend. This blend may cause fuel filter plugging, system gelling, and freezing that may affect vehicle starting. You may need to turn the ignition on and off a few times before the vehicle will start. Also, idle the vehicle for a couple of minutes before accelerating.

It is recommended to use Ultra Low Sulfur No. 1-D diesel fuel or a blend of No. 1-D and No. 2-D diesel fuel to enhance vehicle operation in cold weather at temperatures below 0 °C (32 °F). Use of No. 1-D diesel fuel may lower the fuel economy. For additional information for better cold weather operation, see *Engine Heater* ⇨ *17*.

Water in Fuel

Improper fuel tank inspection or cleaning, or contaminated fuel from suppliers, can cause water to be pumped into the fuel tank along with the diesel fuel. If a WATER IN FUEL SERVICE REQUIRED message displays, the water must be drained immediately.

⚠ Warning

Diesel fuel containing water is still combustible. You or others could be burned. If the fuel needs to be drained, keep sparks, flames, and smoking materials away from the mixture.

Caution

Water in the diesel fuel can corrode internal components of the fuel system and lead to severe damage. It can also support fungus or bacteria growth, which can damage the fuel system. Even with a diesel fuel biocide, the fuel system may still need to be cleaned. Your dealer can advise of the appropriate solution.

If the fuel tank needs to be purged to remove water, see your dealer or a qualified technician. Improper purging can damage the fuel system.

Water in Fuel Troubleshooting

If the WATER IN FUEL SERVICE REQUIRED message comes on:

Problem	Recommended Action
Message displays but goes off during the ignition cycle.	The fuel filter is partially filled with water. Drain the water as soon as possible. See "Removing Water from the Fuel Filter" following.
Message displays and stays on.	Drain the fuel filter immediately. If no water can be drained, and the temperature is below freezing, then water may be frozen in the filter. Move the vehicle to a warm location to thaw the water, then drain the fuel. If water still does not drain, see your dealer.

Problem	Recommended Action
Immediately after refueling, message displays and stays on.	A large amount of water is in the fuel tank. Drain the fuel filter immediately. If the message stays on or comes back on without refueling, then fuel tank purging is required. See your dealer. If the message displays and the engine stalls or runs rough, do not drive until the water contaminated fuel is drained.

Caution

Driving with this message on can damage the fuel injection system and the engine. If the message comes on right after a

(Continued)

Caution (Continued)

refuel, water was pumped into the fuel tank. Turn off the engine and drain the water immediately.

Removing Water from the Fuel Filter

To drain water:

1. Turn the engine off and apply the parking brake.

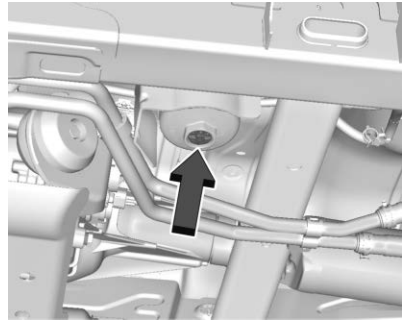

2. Place a container under the filter drain valve. The filter drain valve is on the bottom of the fuel filter. The filter drain valve is under the vehicle on the driver side, inside the frame rail.
3. Open the drain valve by turning it counterclockwise. Allow the filter to drain until all of the water has been removed. Close the valve.
4. Properly dispose of the water contaminated fuel.
5. Start the engine and let it run for a few minutes. During the draining process, air may have entered the fuel system. If the engine stalls, the fuel system may need to be primed. See “Fuel Priming” following.

Fuel Priming

For the fuel system to work properly, the fuel lines must be full of fuel. If air gets in, the fuel lines need to be primed before operating the vehicle.

If air is present, the following may have happened:

- The vehicle ran out of fuel.
- The fuel filter was removed.
- The fuel lines were removed or disconnected.
- The fuel filter water drain valve was opened while the engine was running.

Priming the Fuel System

There is an electric priming pump that will bring fuel to the engine and eliminate air in the fuel lines. To prime the engine:

1. Correct any condition that caused the loss of prime.
2. Turn the ignition on for 30 seconds. Do not start the engine. The fuel pump will start priming.
3. Turn the ignition off, then back on, and crank the engine for 15 seconds.
4. If the engine does not start, repeat Steps 2 and 3 until the engine starts.

   If the engine does not start after repeating Steps 2 and 3 three times, turn the ignition off for 60 seconds.
5. Repeat the above steps until the engine starts.
6. If the engine starts, but does not run smoothly, increase the engine speed slightly.
7. If the engine starts and runs but stalls again, turn the ignition off for 60 seconds.
8. When the engine starts, let it idle for a few minutes and check the filter for any leaks.

Running Out of Fuel

If the engine has stalled due to running out of fuel, try to restart it:

1. If parked on a level surface, add at least 3.8 L (1 gal) of fuel. Up to 18.9 L (5 gal) may be needed if parked on a slope.
2. Follow the vehicle fuel system priming procedure earlier in this section to re-prime the system and restart the engine.

If the malfunction indicator lamp (check engine light) comes on due to running out of fuel, it may take a few drive cycles to clear.

Fuel Filter Replacement

⚠ Warning

Diesel fuel is flammable. It could start a fire if something ignites it, and people could be burned. Do not let it get on hot engine parts, and keep matches or other ignition sources away.

The fuel filter is on the driver side, inside the frame rail.

To replace the fuel filter:

1. Drain any water from the filter. See “Removing Water from the Fuel Filter” in *Water in Fuel* ⇨ *24*.

   Keep the engine off until the procedure is completed.
2. Apply the parking brake.

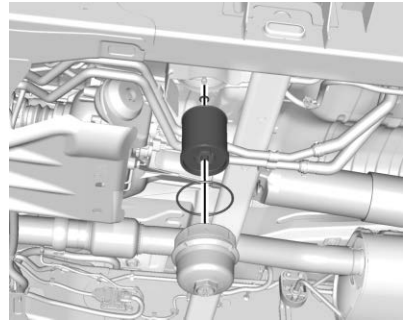

3. Remove the filter element cap by turning it counterclockwise.
4. Remove the filter element. If there is any dirt on the filter sealing surface, clean it off.
5. Install the new filter element and o-ring.
6. Reinstall and tighten the filter cap to the housing.

7. Use the fuel filter priming procedure to prime the fuel filter. See “Fuel Priming” in *Water in Fuel* ⇨ *24*.
8. Start the engine and let it idle for five minutes. Check the fuel filter and air bleed valve for leaks.
9. Reset the fuel filter monitor. See *Driver Information Center (DIC)* ⇨ *8*.

Filling the Tank

An arrow on the fuel gauge indicates which side of the vehicle the fuel door is on. See “Fuel Gauge” in the Owner’s Manual. Do not refill the diesel fuel and Diesel Exhaust Fluid (DEF) at the same time.

⚠ Warning

Fuel vapors and fuel fires burn violently and can cause injury or death.

Follow these guidelines to help avoid injuries to you and others:

- Read and follow all the instructions on the fuel pump island.
- Turn off the engine when refueling.
- Keep sparks, flames, and smoking materials away from fuel.

(Continued)

Warning (Continued)

- Do not leave the fuel pump unattended.
- Avoid using electronic devices while refueling.
- Do not re-enter the vehicle while pumping fuel.
- Keep children away from the fuel pump and never let children pump fuel.
- Before touching the fill nozzle, touch a metallic object to discharge static electricity from your body.
- Fuel can spray out if the fuel cap is opened too quickly. This spray can happen if the tank is nearly full, and is more likely in hot weather. Open the fuel cap slowly and wait for any hiss noise to stop, then unscrew the cap all the way.

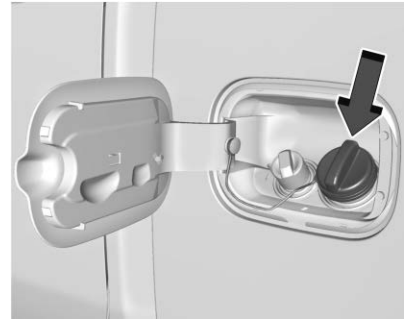

Double Cab Shown, Crew Cab Similar

Turn the fuel cap counterclockwise to remove. When refueling, hang the fuel cap from the hook on the fuel door. Fully insert and latch the fill nozzle, begin fueling.

For models with dual fuel tanks, the fuel gauge shows an average of both tanks. When refueling, refuel the primary front tank first, then add fuel to the auxiliary rear tank.

⚠ Warning

Overfilling the fuel tank by more than three clicks of a standard fill nozzle may cause:

(Continued)

Warning (Continued)

- Vehicle performance issues, including engine stalling and damage to the fuel system.
- Fuel spills.
- Under certain conditions, fuel fires.

Diesel fuel can foam when filling the tank. The automatic pump nozzle may shut off, even if the tank is not full. Wait for the foaming to stop, and then fill the tank more slowly. Be careful not to spill fuel. Wait five seconds after pumping before removing the fill nozzle. Clean fuel from painted surfaces as soon as possible. See *Exterior Care* ⇨ *58*.

Reinstall the cap by turning it clockwise until it clicks. Push the fuel door closed.

⚠ Warning

If a fire starts while you are refueling, do not remove the fill nozzle. Shut off the flow of fuel by shutting off the pump or by notifying the station attendant. Leave the area immediately.

Caution

If a new fuel cap is needed, be sure to get the right type of cap from your dealer. The wrong type of fuel cap may not fit properly and could damage the fuel system.

Accidental Refueling with Gasoline

Caution

If the vehicle is accidentally refueled with gasoline, do not continue driving the vehicle except to get to a location where it can be stopped safely. Driving the vehicle will damage the engine. Tow the vehicle for service. Have the gasoline removed from the tank and fuel system.

Filling a Portable Fuel Container

⚠ Warning

Never fill a portable fuel container while it is in the vehicle. Static electricity discharge from the container can ignite the fuel vapor. You or others could be

(Continued)

Warning (Continued)

badly burned and the vehicle could be damaged. To help avoid injury to you and others:

- Dispense fuel only into approved containers.
- Do not fill a container while it is inside a vehicle, in a vehicle's trunk, in a pickup bed, or on any surface other than the ground.
- Bring the fill nozzle in contact with the inside of the fill opening before operating the nozzle. Maintain contact until filling is complete.
- Keep sparks, flames, and smoking materials away from fuel.
- Avoid using electronic devices while pumping fuel.

Trailer Towing

When towing at high elevation on steep uphill grades, consider the following:

Engine coolant at higher elevation will boil at a lower temperature than at or near sea level. If the engine is turned off immediately after towing at high elevation on steep

uphill grades, the vehicle may show signs similar to engine overheating. To avoid this, let the engine run while parked (preferably on level ground) with the transmission in P (Park) and the parking brake applied for at least five minutes before turning the engine off. If the overheat warning comes on, see *Engine Overheating* ⇨ *55*.

A trailering information label on the driver's side door B-pillar shows tow rating information for your vehicle.

All axles of the trailer must be equipped with brakes adequate for the intended use. Trailer braking equipment conforming to Canadian Standards Association (CSA) requirement CAN3-D313, or its equivalent, is recommended.

See “Trailer Towing” in the owner’s manual for kingpin weight and trailer tongue weight information.

Weight of the Trailer Tongue

The tongue weight load (1) of any trailer is very important because it is also part of the vehicle weight. The Gross Vehicle Weight (GVW) includes the curb weight of the vehicle, any cargo carried in it, and the people who will be riding in the vehicle as well as trailer tongue weight. Vehicle options, equipment, passengers, and cargo in the vehicle reduce the amount of tongue weight the vehicle can carry, which will also reduce the trailer weight the vehicle can tow.

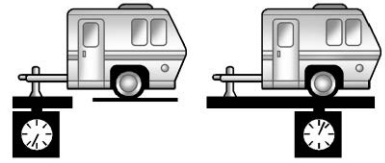

The trailer tongue weight (1) should be 10-15% of the total loaded trailer (2).

Do not exceed the maximum allowable tongue weight for the vehicle. Choose the shortest hitch extension that will position the hitch ball closest to the vehicle. This will help reduce the effect of trailer tongue weight on the rear axle.

Trailer rating may be limited by the vehicle's ability to carry tongue weight. Tongue or kingpin weight cannot cause the vehicle to exceed the GVWR (Gross Vehicle Weight Rating) or the RGAWR (Rear Gross Axle Weight Rating). See “Total Weight on the Vehicle's Tires” in the owner’s manual.

After loading the trailer, weigh the trailer and then the tongue, separately, to see if the weights are proper. If they are not, adjustments might be made by moving some items around in the trailer.

If a cargo carrier is used in the trailer hitch receiver, choose a carrier that positions the load as close to the vehicle as possible. Make sure the total weight, including the carrier, is no more than half of the maximum allowable tongue weight for the vehicle or 227 kg (500 lb), whichever is less.

Conversions and Add-Ons

Power Take-Off (PTO)

If equipped, the Power Take-Off (PTO) is a GM Upfitter integrated system that creates an auxiliary power source for running add-on equipment, such as salt spreaders, snow plows, winches, and lift buckets. It controls engine speed to values higher than normal base idle, PTO integral clutch engagement, and remote starting and shutdown of the engine.

PTO Switch

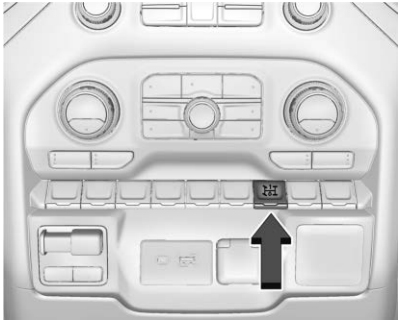

If equipped, there is an available PTO switch in the auxiliary switchbank in one of the right side positions.

When installing PTO aftermarket equipment, the PTO wiring and operation recommendations provided by the service manual and GM Upfitter documentation must be strictly followed.

Refer to the bulletins in the GM Upfitter Integration website www.gmupfitter.com for the PTO Operating Description and Application Guide.

⚠ Warning

Engine exhaust contains Carbon Monoxide (CO), which cannot be seen or smelled. Exposure to CO can cause unconsciousness or even death. Never operate PTO in an enclosed area such as a garage or building that has no fresh air ventilation. See “Engine Exhaust” in the owner’s manual.

⚠ Warning

If the key is in the ignition (Key Access) or the RKE transmitter is in the vehicle (Keyless Access) during Remote PTO operation, the vehicle can be shifted out of P (Park). Even though PTO will be disengaged, depending on PTO Upfitter application, personal injury or property damage may result from vehicle movement. Always remove the key from the ignition or the RKE transmitter from the vehicle before operating Remote PTO, unless the Remote Operation In-Cab Enable feature is used.

Primary PTO Operating Modes

PTO modes of operation are:

- Preset

  Stationary operation only: In-cab control is standard, remote control is available. Preset speed control is standard.

- Variable

  Available in in-cab control and in remote control.

- Mobile

  In-cab control only. Variable speed control only available.

- Operator Selectable In-Cab Mode (OSIM)

  In-cab operation only.

  OSIM is for vehicles that require both stationary and mobile modes. OSIM is available via the GM Service Tool only. During the configuration of OSIM, two modes must be paired: stationary preset and mobile, or stationary variable and mobile. During activation of OSIM, one of the two modes within the pre-configured pairing must be selected. If an OSIM mode is not selected, PTO will not operate.

OSIM modes of operation are:

- Stationary

  The configuration may be stationary preset or stationary variable.

- Mobile

  The configuration is variable only.

  Selection between OSIM pairings is not available.

  Remote modes are not available.

The factory default programming enables in-cab control. For stationary modes, the GM Service Tool can reprogram the system to allow for remote control and disable the in-cab control.

All PTO modes provide for engine rpm control and PTO clutch control.

All PTO modes provide for safety interlocks for PTO load disengagement.

Remote PTO modes provide for remote engine starting and shutdown.

Stationary in-cab and Remote PTO modes provide for engine shutdown due to critical engine conditions, as well as a timed engine shutdown feature.

Preset PTO

Preset Enable Conditions – In-Cab Operation

To enable PTO:

1. With the engine running, shift the vehicle into P (Park) and set the parking brake. Do not press the brake pedal.
2. Confirm cruise control is off.
3. Press and release the PTO in-cab switch below the climate controls in the center stack. The PTO clutch will engage. The PTO indicator light will flash rapidly until the engine reaches the PTO Standby Speed and it will then be on steady.
4. Once the PTO Standby Speed is reached, use SET– and +RES on the cruise control to reach the Set 1 or Set 2 PTO engine speeds.

   The accelerator pedal is disabled in standard configuration. The accelerator pedal may be used to override the PTO present speeds if configured by the GM Service Tool. The PTO must be operated below the Max PTO Engine Speed configured.

Factory Default PTO Engine Speeds	
Standby	900 rpm
Set 1 (SET–)	1200 rpm
Set 2 (+RES)	1900 rpm

The first time PTO is used:

1. The PTO Control setting on the GM Service Tool is programmed to Interior Mode PTO Switch.
2. Check the correct operation of the default PTO preset stationary mode to observe the three idle up speeds. The PTO function should be confirmed before any wiring modifications are done or any reprogramming is attempted. See your dealer if the default presets are not functioning properly.
3. When the PTO indicator light is either flashing or on solid, the PTO clutch will be activated.

Preset Enable Conditions – Remote Operation

This requires programming with the GM Service Tool and remote switch panel provided by GM Upfitter.

1. Confirm cruise control is off.
2. Set the parking brake and shift the transmission into P (Park).

3. Turn the ignition off or remove the ignition key, if equipped.
4. Confirm the hood is closed.
5. From outside the vehicle, press and release the Remote PTO Arm switch.
6. Within five seconds, open and close the Remote PTO Engine Start/Shutdown switch.
7. The horn will chirp, and engine starting will be initiated. The PTO system will then elevate engine rpm to PTO Standby Speed and engage the PTO clutch. Park lamps will come on.
8. The Remote PTO Set switch can now be used to set the PTO Set 1 and Set 2 engine speeds.

The accelerator pedal is disabled when Remote PTO operation is selected.

⚠ Warning

If the key is in the ignition (Key Access) or the RKE transmitter is in the vehicle (Keyless Access) during Remote PTO operation, the vehicle can be shifted out of P (Park). Even though PTO will be disengaged, depending on PTO Upfitter

(Continued)

Warning (Continued)

application, personal injury or property damage may result from vehicle movement. Always remove the key from the ignition or the RKE transmitter from the vehicle before operating Remote PTO, unless the Remote Operation In-Cab Enable feature is used.

Preset Enable Conditions – Remote Operation In-Cab Enable

This requires programming with the GM Service Tool and remote switch panel provided by GM Upfitter.

To start remote operation in-cab:

1. With the engine running, shift the vehicle into P (Park), release the brake pedal, and set the parking brake.
2. Confirm cruise control is off.
3. Confirm the hood is closed.
4. Press and release the in-cab PTO switch.
5. The horn will chirp, the PTO clutch will engage, and the engine will advance to the PTO Standby Speed. Park lamps will come on.
6. The Remote PTO Set switch may be used to select PTO Set 1 and Set 2 engine speeds.

The accelerator pedal is disabled when Remote PTO operation is selected.

The vehicle may be exited.

With the Remote Operation In-Cab Enable feature remote PTO operation may be ended by pressing the brake pedal, at which time the PTO clutch disengages and the engine returns to base idle speed. The vehicle can be driven after the parking brake is released.

Preset Enable Conditions – Operator Selectable In-Cab Mode (OSIM)

This requires programming with the GM Service Tool and requires pairing OSIM stationary preset with OSIM mobile mode. If OSIM pairing has been configured, initiate OSIM preset operation:

1. With the engine running, shift the vehicle into P (Park), release the brake pedal, and set the parking brake.
2. Confirm cruise control is off.
3. Confirm the hood is closed.
4. Press and release the in-cab PTO switch. The PTO indicator light will flash slowly.

5. Within 10 seconds, press and release SET – on the cruise control.
   - The PTO clutch engages when the PTO operation is initiated by the switch input.
   - The first elevated engine speed, PTO Standby Speed, is intended as verification that the system is active and ready to go to a working speed. This speed can be modified to a working speed with the GM Service Tool. The upper limit for PTO Standby Speed is 1500 rpm.
6. The PTO clutch will engage and the PTO indicator light will change to solid when the engine speed reaches the PTO Standby Speed. Press and release SET– on the cruise control to select the PTO Set 1 speed. Press and release +RES on the cruise control to select the PTO Set 2 speed.

Variable PTO

Variable Enable Conditions – In-Cab Operation

This requires programming with the GM Service Tool.

To enable PTO:

1. With the engine running, shift the vehicle into P (Park), release the brake pedal, and set the parking brake. Make sure Cruise Control is off.
2. Press and release the PTO in-cab switch below the climate controls in the center stack. The PTO clutch will engage. The PTO indicator light will flash rapidly until the engine reaches the PTO Standby Speed and it will then be on steady.
3. Once PTO Standby Speed is reached, SET – and +RES on the cruise control can be used to tap up and tap down the engine speed. Factory setting for the tap step is 100 rpm and the setting for the ramp rate is 148 rpm/sec. The GM Service Tool can enable changing the default value for tap step through vehicle personalization. The default values for both tap step and ramp rate can be changed with the GM Service Tool. The accelerator pedal is disabled, and cannot be used to control PTO engine speed.

Variable Enable Conditions – Remote Operation

This requires programming with the GM Service Tool and the appropriate remote switch panel provided by GM Upfitter.

1. Confirm cruise control is off.
2. Set the parking brake and shift the transmission into P (Park).
3. Turn the ignition off or remove the ignition key, if equipped.
4. Confirm the hood is closed.
5. From outside the vehicle, press and release the Remote PTO Arm switch.
6. Within five seconds, open and close the Remote PTO Engine Start/Shutdown switch.
7. The horn will chirp, and then engine starting will be automatically initiated. The PTO system will engage the PTO clutch and then elevate engine rpm to PTO Standby Speed.

⚠ Warning

If the key is in the ignition (Key Access) or the RKE transmitter is in the vehicle (Keyless Access) during Remote PTO operation, the vehicle can be shifted out of P (Park). Even though PTO will be disengaged, depending on PTO Upfitter application, personal injury or property damage may result from vehicle movement. Always remove the key from the ignition or the RKE transmitter from

(Continued)

Warning (Continued)

the vehicle before operating Remote PTO, unless the Remote Operation In-Cab Enable feature is used.

Variable Enable Conditions – Remote Operation In-Cab Enable Starting Remote Operation from In-Cab

This requires programming with the GM Service Tool and remote switch panel provided by GM Upfitter.

1. With the engine running, shift the vehicle into P (Park), release the brake pedal, and set the parking brake.
2. Confirm cruise control is off.
3. Confirm the hood is closed.
4. Press and release the PTO in-cab switch.
5. The horn will chirp, the PTO clutch will engage, and the engine will advance to the PTO Standby Speed.

The vehicle may be exited.

The accelerator pedal is disabled when Remote PTO operation is selected.

- The desired engine operating speed can now be reached. Switches or potentiometer engine rpm controls are available, depending on which one was installed.
  - Switches – The Remote PTO Set and Resume switches can be used to tap up and tap down to the desired engine speed.
  - Potentiometer – A Remote PTO Throttle Potentiometer can be used as a continuous variable throttle control to dial in the desired engine speed.

Press the brake pedal to end remote PTO operation. The PTO clutch disengages and the engine returns to base idle speed. The vehicle can be driven after the parking brake is released.

Variable Enable Conditions – OSIM

This requires programming with the GM Service Tool and specific pairing of stationary variable and mobile modes. Remote operation is not available.

If OSIM pairing has been configured, initiate OSIM stationary variable operation:

1. With the engine running, shift the vehicle into P (Park), release the brake pedal, and set the parking brake.
2. Confirm cruise control is off.
3. Confirm the hood is closed.
4. Press and release the PTO in-cab switch. The PTO indicator light will flash slowly.
5. Within 10 seconds, press and release SET – on the cruise control. The PTO clutch will engage and the engine speed will advance to the PTO Standby Speed. The PTO indicator light will change to solid.
6. Tap +RES and SET– on the cruise control for the desired operating speed.

- The first elevated engine speed, PTO Standby Speed, is intended as verification that the system is active and ready to go to a working speed.
- The engine speeds can be adjusted between the low of PTO Standby Speed and the high of PTO Max Engine Speed limits. Both values can be modified with the GM Service Tool. Based on the value chosen for PTO Max Engine Speed, the PTO menu in the center stack may show speeds that are not available.
- Factory setting for the tap step is 100 rpm and the setting for ramp rate is 148 rpm/sec. The value for tap step can be modified through vehicle personalization.

The values for both tap step and ramp rate can be changed with the GM Service Tool.

- Refer to the service manual or go to the GM Upfitter Integration website www.gmupfitter.com.

Mobile PTO

Mobile Enable Conditions – In-Cab Operation Only

This requires programming with the GM Service Tool.

1. The engine must be running.
2. The parking brake must be released.
3. Confirm cruise control is off.
4. Engine rpm must be less than 1500 rpm.
5. Shift the transmission to L1, L2, L3, L4, or L5.
6. Tap the brake pedal but do not continue pressing the brake pedal.
7. Keep the driver door closed. The driver door can be kept open if reconfigured using the GM Service Tool. See www.gmupfitter.com.
8. Press and release the PTO in-cab switch below the climate controls in the center stack. Within 10 seconds press and release +RES on the cruise control. The PTO indicator light will flash slowly between presses. The PTO clutch will engage and the PTO indicator light will flash rapidly until PTO reaches Standby Speed, and then the light will become steady. The engine speed will remain at the current throttle setting or advance to PTO Standby Speed, whichever value is greater. If the engine speed is above 1500 rpm (configurable), the PTO clutch will not engage. PTO can be engaged when the engine speed drops below 1500 rpm.
9. Once engaged, if additional engine speed is desired, use either the cruise control or the accelerator pedal to temporarily adjust the engine speed.
   - +RES or SET– on the cruise control can be used to tap up or down, or if continuously held to ramp up or down, to the desired operating speed. Top limit is PTO Max Engine Speed, default 2100 rpm and programmable to 3100 rpm. Lower limit is PTO Standby Speed, default 900 rpm with program range from base idle to 900 rpm.
   - The accelerator pedal can be used to achieve the desired speed. When the desired speed is reached, use SET– on the cruise control to capture and maintain that speed. Normal tap up and tap down can then be used to fine tune the setting.

In Mobile PTO mode, the vehicle speed reached is the result of the current engine speed requested and the transmission gear range selected. The gears available for selection are L1 through L5. The transmission may limit the selection of a higher gear until a minimum speed for that gear is reached. Attempts to up-shift higher than L5 will be denied by the transmission system.

Mobile Enable Conditions – Operator Selectable In-Cab Mode (OSIM)

This requires programming with the GM Service Tool and specific pairing mobile mode with either stationary preset or variable. Remote operation is not available.

See “Mobile PTO” previously in this section.

PTO System Disengage Conditions

Preset or Variable Stationary Modes – In-Cab Operation

To disengage PTO, do one of the following:

- Press the brake pedal. The engine returns to base idle, but the PTO clutch remains engaged. The PTO indicator light will flash slowly indicating that a PTO set speed is still stored in memory. When the brake pedal is released, the engine speed will return to curb idle. A press and release of +RES on the cruise control will restore engine rpm to the last PTO set speed. The PTO system can also be programmed to return engine rpm to the PTO Standby Speed setting.
- Press on the cruise control. The engine returns to base idle, but the PTO clutch remains engaged. The PTO indicator light will flash slowly indicating that a PTO set speed is still stored in memory. Pressing +RES on the cruise control will restore engine rpm to the last PTO set speed.
- Press the PTO in-cab switch. The PTO clutch disengages and the engine returns to base idle. The PTO indicator light will turn off, indicating the PTO clutch is disengaged and the stored set speed has been cleared from memory.

Stationary Modes (Preset or Variable) – Remote Control

To disengage PTO:

- Open the Remote PTO Engine Start/ Shutdown switch. The PTO clutch disengages and the engine will stop.
- If equipped, press the PTO Emergency Stop switch. The PTO clutch disengages and the engine will stop. Refer to the bulletins in the GM Upfitter Integration website www.gmupfitter.com for the Power Take Off (PTO) operating description and application guide.
- For key access vehicles, turn the ignition on and press the brake pedal. For keyless access vehicles, hold the push button start for two seconds. Press the brake pedal. The PTO clutch disengages and the engine returns to base idle speed.

Stationary Modes will also disengage if:

- Vehicle movement is detected.
- The parking brake is released.
- The transmission is shifted out of P (Park).
- The ignition is cycled from on to off.
- The PTO feedback signal is lost indicating the load is disengaged if used. See www.gmupfitter.com.
- Cruise control becomes enabled.
- Timed auto-engine shutdown: PTO must be operational for this function to be active.
- The engine is shut down based on critical engine or PTO system fault conditions: This feature will shut down the engine when PTO is operating if a critical engine condition such as low oil, low oil pressure, hot engine, hot transmission, low fuel, or Diesel Particulate Filter regeneration is detected by the vehicle system. If PTO operation is continued when critical engine conditions are present, a horn chirp warning will occur after 30–60 seconds. The engine will shut down two minutes after the horn warning. The engine can be restarted with the ignition key or with the Remote PTO engine start controls or by push button start. The horn warning and engine shutdown will again occur if the critical engine condition is still present.
- Maximum engine torque limit has been reached.

Resume memory speed is cleared for the above actions.

When Remote PTO engine starting has been initialized with the ignition key in the RUN position, the shift lever will remain locked.

A shift out of P (Park) will not be allowed while the engine is running and PTO is active, until one of the following actions is taken:

- Press the brake pedal. PTO will disengage. Engine will run at idle speed and shift lever can be shifted from P (Park).
- Press the PTO in-cab switch, only if the PTO in-cab Remote Start/Stop feature is enabled. This requires programming with the GM Service Tool. PTO will disengage and shift lever can be shifted from P (Park).

Mobile Mode

To disengage PTO:

- Press the brake pedal. The PTO system releases control of engine speed, but the PTO clutch remains engaged. The engine will return to base idle unless the accelerator pedal is pressed. The PTO clutch remains engaged. The PTO indicator light will flash slowly indicating that a PTO set speed is still stored in memory. Upon releasing the brake, the factory default programming is for the engine speed to remain at curb idle awaiting an input from +RES on the cruise control to restore engine rpm to the last PTO set speed. The system can also be programmed to return engine rpm to the PTO Standby Speed setting.
- Press on the cruise control. The engine returns to base idle, but the PTO clutch remains engaged. The PTO indicator light will flash slowly indicating that a PTO set speed is still stored in memory. Pressing +RES on the cruise control will restore engine rpm to the last PTO set speed.
- Press the PTO in-cab switch. The PTO clutch disengages and the engine returns to base idle. The PTO indicator light will turn off, indicating the PTO clutch is disengaged and the stored set speed has been cleared from memory.

Mobile Mode will also disengage if:

- PTO feedback input is lost. The engine speed is returned to the PTO Standby speed setting and the load is still engaged. This is configurable with the GM Service Tool.
- Vehicle Speed exceeds Max Vehicle Speed. Factory default setting = 94 km/h (58 mph). PTO will re-engage and advance to the last engine speed stored in memory when both the vehicle speed is reduced below 94 km/h (58 mph) and the engine speed ramps down below the maximum PTO engagement speed (1500 rpm factory default setting).
- Engine Speed exceeds Max Engine Speed for more than 15 seconds. Factory default setting = 2100 rpm.
- on the cruise control is pressed.
- The parking brake is applied.
- Maximum engine torque limit has been reached.

Resume memory speed is cleared for the above actions.

Although the PTO system attempts to limit accelerator and PTO switch inputs to comply with maximum speed and/or rpm parameters, some vehicle operating conditions such as downhill acceleration can cause the vehicle speed or engine rpm to exceed these limits. In those cases, the PTO system may disengage.

Operator Selectable In-Cab Mode (OSIM)

To disable OSIM Stationary PTO:

- Press and release the PTO in-cab switch.

To disable OSIM Mobile PTO:

- Press and release the PTO in-cab switch.

Prolonged or Extended PTO Operation

When operating the vehicle in stationary PTO mode, the Diesel Particulate Filter (DPF) will continue to filter the exhaust and build up soot. The engine control system, depending on the speed and load being applied by the PTO, may not be able to generate enough energy or adequate heat needed to automatically clean or regenerate the DPF. If manual regeneration is not initiated, continued operation under conditions that do not allow effective regeneration or cleaning will eventually plug the DPF and result in reduced power. The ENGINE POWER IS REDUCED Driver Information Center (DIC) message and malfunction indicator lamp will display. See your dealer for service. To prevent this, frequently monitor the vehicle during stationary PTO operation, and pay attention to horn chirps and/or the CLEAN EXHAUST FILTER SEE OWNER MANUAL NOW DIC warning messages. If the DIC message is displayed during PTO operation, see *Diesel Particulate Filter* ⇨ *17* for information on how to clean or regenerate the DPF.

PTO Operational Speed Control

Variable PTO operational speed control provides the following functions:

Cruise Control SET– (In-Cab) or Remote PTO Set 1 Switch

SET : When PTO is engaged press and hold the accelerator to obtain the desired engine speed, then press and release SET– on the cruise control. The current engine speed will be maintained. This action can be repeated as desired to capture a higher rpm value. The PTO set speed cannot exceed 3100 rpm, or the PTO Max Engine Speed configured.

TAP DOWN : Press and release SET– on the cruise control to reduce the engine speed by decrements of 100 rpm. The tap down engine speed decrements can be adjusted by the GM Service Tool. In Remote Mode use Set 1 Switch to reduce engine speed. Adjustment of tap down engine speed decrements can be done through vehicle personalization.

COAST : Press and hold SET– on the cruise control to reduce the rpm at 148 rpm/sec until the desired engine speed is reached or until the initial PTO Standby Speed is reached. Use Set 1 Switch in Remote Mode. The speed change will happen after three seconds of holding SET– or Set 1 switch.

In-Cab Cruise Control +RES or Remote PTO Set 2 Switch

RESUME : After a PTO set speed has been met, a Resume Speed message is retained, after applying the brake pedal or pressing on the cruise control . Engine speed will reduce to basic idle speed. The PTO indicator light will flash slowly indicating the previous PTO set speed has been retained in memory. Press and release +RES on the cruise control to resume the previous PTO set speed.

TAP UP : Press and release +RES on the cruise control to increase the engine speed by increments of 100 rpm. The tap up engine speed increments can be adjusted by the GM Service Tool. In Remote Mode use Set 2 Switch to increase engine speed. Adjustment of tap down engine speed increments can be done through vehicle personalization.

ACCEL : Press and hold +RES on the cruise control to increase the rpm by 148 rpm/sec until the desired engine speed is reached or until the maximum allowable PTO set speed is reached. The speed change will happen after three seconds of holding +RES or Set 2 switch. Alternatively, the engine speed acceleration can be adjusted by the GM Service Tool.

Factory Preset Parameters

The following table lists the factory preset parameters. These may be altered by the GM Service Tool to configure the various PTO features.

Programmable Parameters	Factory Setting	Minimum Value	Maximum Value
PTO Option Configuration	VEHICLE STATIONARY, PRESET SPEED	VEHICLE STATIONARY, PRESET SPEED VEHICLE STATIONARY, VARIABLE SPEED VEHICLE MOBILE, VARIABLE SPEED	
PTO Control	In-Cab PTO Mode	In-Cab PTO Mode, Remote PTO Mode, Operator In-Cab Selectable Mode (OSIM)	
Type of Set Switch Operation	MOMENTARY	MOMENTARY	LATCHING
PTO SET 1 Engine Speed After PTO On	DISABLED	DISABLED	ENABLED
Interlock or Redundant Emergency Stop Feedback	DISABLED	DISABLED	ENABLED
Keep PTO Clutch Engaged during Braking or upon Pressing	ENABLED	DISABLED	ENABLED

Programmable Parameters	Factory Setting	Minimum Value	Maximum Value
Action after Brake Is Released	RETURN TO BASE IDLE rpm	RETURN TO BASE IDLE rpm	RETURN TO STANDBY rpm Max. vehicle speed may be limited to 40 km/h (25 mph) if this is programmed with the GM Service Tool. After reverting back to RETURN TO BASE IDLE rpm using the GM Service Tool, Max. vehicle speed is also to be set to required speed.
Set Low Fuel Level for Engine Shutdown	15%	0%	25%
Engine Run Time with PTO Active Timer	ENABLED	DISABLED	ENABLED
Engine Run Time while PTO Is Active	420 min	10 min	3480 min
PTO Max. Engine Speed	2100 rpm	1100 rpm	3100 rpm
Min. Engine Speed for PTO Engagement	500 rpm	500 rpm	1000 rpm
Max. Engine Speed for PTO Engagement	1500 rpm	1000 rpm	1800 rpm
PTO Standby rpm	900 rpm	700 rpm	1500 rpm
PTO Set Speed 1	1200 rpm	1100 rpm	2900 rpm

Programmable Parameters	Factory Setting	Minimum Value	Maximum Value
PTO Set Speed 2	1900 rpm	1700 rpm	3100 rpm
Engine Speed Tap Step	100 rpm	4 rpm	500 rpm
Engine Speed Ramp Rate	148 rpm/s	4 rpm/s	148 rpm/s
Maximum Vehicle Speed	94 km/h (58 mph)	30 km/h (19 mph)	94 km/h (58 mph)
Minimum Remote Potentiometer Threshold	2%	0%	50%
Maximum Remote Potentiometer Threshold	95%	50%	100%
Remote Set Switch Transition to Low Voltage (<33% of Ignition Voltage)	SET SPEED 1	STANDBY SPEED, SET SPEED 1, or SET SPEED 2	
Remote Set Switch Transition to Open State (>33% of Ignition, and <67% of Ignition Voltage)	PTO STANDBY	STANDBY SPEED, SET SPEED 1, or SET SPEED 2	
Remote Set Switch Transition to High Voltage (>67% of Ignition Voltage)	SET SPEED 2	STANDBY SPEED, SET SPEED 1, or SET SPEED 2	
Horn Chirps during a Remote Start Event	ENABLED	DISABLED	ENABLED
Standby Speed Menu	ENABLED	DISABLED	ENABLED

Programmable Parameters	Factory Setting	Minimum Value	Maximum Value
Set 1 Speed Menu (In Stationary Preset)	ENABLED	DISABLED	ENABLED
Set 2 Speed Menu (In Stationary Preset)	ENABLED	DISABLED	ENABLED
Engine Run Shutdown Time Menu (In Stationary Preset)	ENABLED	DISABLED	ENABLED
Engine Speed Tap Step Menu (In Stationary Variable and Mobile)	ENABLED	DISABLED	ENABLED
Remote Set Switch Speed Control	DISABLED	DISABLED	ENABLED
Remote Throttle Speed Control	DISABLED	DISABLED	ENABLED
Remote Engine Start	DISABLED	DISABLED	ENABLED
Remote Engine Shutdown	DISABLED	DISABLED	ENABLED
Throttle Override	ENABLED	DISABLED	ENABLED
Throttle Override Timer	10 Minutes	1 Minute	13 Minutes
Driver Door Status Usage	ENABLED	DISABLED	ENABLED
Remote PTO In Cab Control	DISABLED	DISABLED	ENABLED

If the PTO factory preset parameters do not match the settings described above, then they may have already been altered to satisfy the requirements of the installed PTO system and body equipment.

The following PTO settings are also offered through vehicle personalization, which can be enabled by your dealer. These include the following parameters:

- PTO Standby rpm
- PTO Set 1 Speed
- PTO Set 2 Speed
- Tap Step Speed
- PTO Engine Run Timer

Driver Information Center (DIC) Warning Messages

If the PTO indicator light does not remain on, then not all PTO enabling conditions have been met. One or more DIC messages may display if the PTO will not engage and the appropriate action must be taken.

In addition, the PTO indicator light will come on when all conditions required to engage PTO have not been met. When enabling PTO, the PTO indicator light will turn on, then turn off after one second. Under normal operating conditions, the PTO indicator light will remain on throughout the PTO operating cycle.

Additional in-vehicle PTO module information can be accessed by the dealer. Also see the service manual for more information.

Your dealer can access Service Tool information to determine why PTO may not engage and why PTO may unexpectedly disengage due to system conditions.

See www.gmupfitter.com for information on the installation of wiring and programming for PTO aftermarket equipment.

Diesel Particulate Filter Cleaning during PTO Operation

This feature is only available on fleet and commercial vehicles. To verify that the vehicle has this feature, see www.gmupfitter.com to contact the GM Upfitter Integration Group.

If equipped, this feature allows for manual cleaning/regeneration of the Diesel Particulate Filter (DPF) when it is unable to clean itself. It may be necessary to perform a manual regeneration if driving conditions — such as extended slow speed, stop-and-go traffic, extended idles, short drive cycles, or stationary PTO operation — prevent DPF self-cleaning.

Manual regeneration can only be used when the DPF has become at least 90% full. In PTO stationary session when DPF is in this condition, one minute of horn chirps is initiated as a warning to the operator to look for the DIC message and take action for Manual Regeneration. At 100% full, it will attempt to automatically self-clean if proper driving conditions are met. The DPF will clean itself if the vehicle can be driven above 50 km/h (30 mph) for about 30 minutes.

Manual regeneration can be used during a stationary PTO session. However it is strongly recommended that the exhaust filter be cleaned before continuous PTO. If manual regeneration is operating concurrently with PTO then the PTO system will retain control of the engine speed. Low PTO engine speeds will cause regeneration to take longer. To initiate a manual DPF regeneration, see “Manual Regeneration of Diesel Particulate Filter” under Diesel Particulate Filter.

Vehicle Care

General Information
Accessories and Modifications 44

Vehicle Checks
Engine Compartment Overview 45
Engine Oil 46
Engine Oil Life System 48
Automatic Transmission Fluid 48
Engine Air Filter Life System 49
Engine Air Cleaner/Filter 49
Cooling System (Engine) 51
Cooling System (Low Temperature Cooling Circuit) 53
Engine Overheating 55
Engine Fan 57

Electrical System
Engine Compartment Fuse Block 57

Appearance Care
Exterior Care 58

General Information

Accessories and Modifications

Adding non-dealer accessories or making modifications to the vehicle can affect vehicle performance and safety, including such things as airbags, braking, stability, ride and handling, emissions systems, aerodynamics, durability, and electronic systems like antilock brakes, traction control, and stability control. These accessories or modifications could even cause malfunction or damage not covered by the vehicle warranty.

Damage to vehicle components resulting from modifications or the installation or use of non-GM certified parts, including control module or software modifications, is not covered under the terms of the vehicle warranty and may affect remaining warranty coverage for affected parts.

GM Accessories are designed to complement and function with other systems on the vehicle. See your dealer to accessorize the vehicle using genuine GM Accessories installed by a dealer technician.

See the warranty manual.

Aftermarket Engine Performance Enhancement Products and Modifications

Some aftermarket engine performance products and modifications promise a way to increase the horsepower and torque levels of the vehicle's powertrain. You should be aware that these products could have harmful effects on the performance and life of the engine, exhaust emission system, transmission, and drivetrain. The engine, transmission, and drivetrain have been designed and built to offer industry leading durability and performance in the most demanding applications. Engine power enhancement products may enable the engine to operate at horsepower and torque levels that could damage, create failure, or reduce the life of the engine, engine emission system, transmission, and drivetrain. Damage, failure, or reduced life of the engine, transmission, emission system, drivetrain, or other vehicle components caused by aftermarket engine performance enhancement products or modifications might not be covered under the vehicle warranty.

Vehicle Checks

Engine Compartment Overview

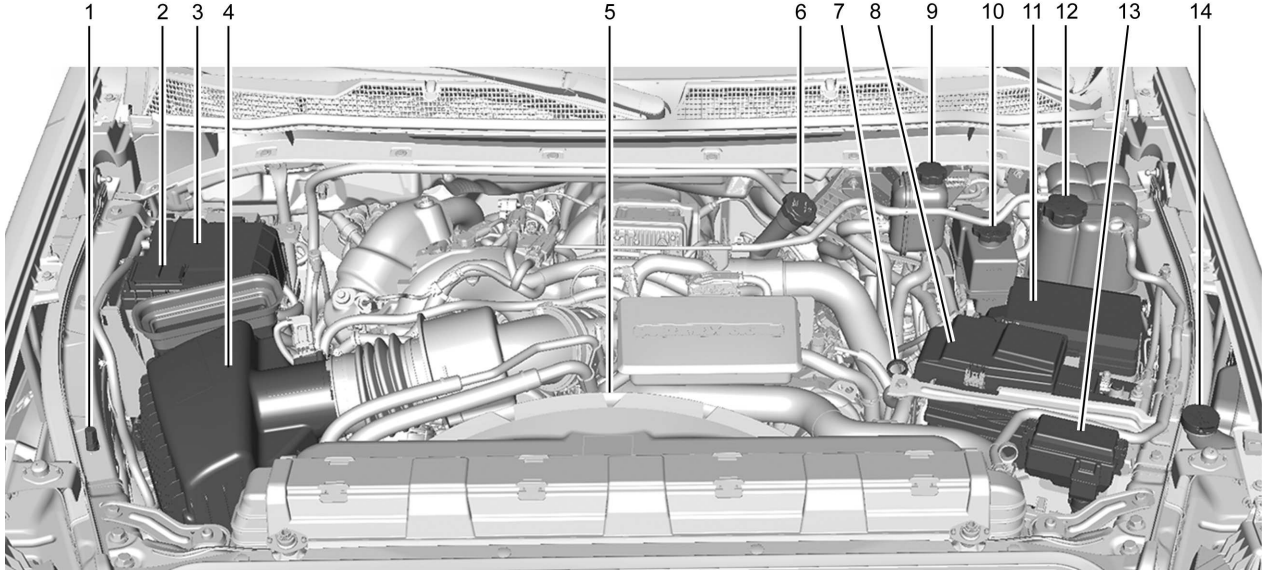

1. Remote Negative (–) Terminal
2. Remote Positive (+) Terminal
3. Battery
4. Engine Air Cleaner/Filter
5. Engine Fan (Out of View)
6. Engine Oil Fill Cap
7. Engine Oil Dipstick
8. Auxiliary Battery
9. Low Temperature Cooling Circuit Coolant Reservoir and Pressure Cap
10. Brake Fluid Reservoir
11. Engine Compartment Fuse Block
12. Engine Coolant Surge Tank and Pressure Cap
13. Auxiliary Fuse Block
14. Windshield Washer Fluid Reservoir

Engine Oil

To ensure proper engine performance and long life, careful attention must be paid to engine oil. Following these simple, but important steps will help protect your investment:

- Use engine oil approved to the proper specification and of the proper viscosity grade. See “Selecting the Right Engine Oil” in this section.
- Check the engine oil level regularly and maintain the proper oil level. See “Checking Engine Oil” and “When to Add Engine Oil” in this section.
- Change the engine oil at the appropriate time. See “Engine Oil Life System” in the owner’s manual.
- Always dispose of engine oil properly. See “What to Do with Used Oil” in this section.

Checking Engine Oil

Check the engine oil level regularly, every 650 km (400 mi), especially prior to a long trip. The engine oil dipstick handle is a loop. See *Engine Compartment Overview* ⇨ *45* for the location.

⚠ Warning

The engine oil dipstick handle may be hot; it could burn you. Use a towel or glove to touch the dipstick handle.

If a low oil Driver Information Center (DIC) message displays, check the oil level.

Follow these guidelines:

- To get an accurate reading, park the vehicle on level ground. Check the engine oil level after the engine has been off for at least two hours. Checking the engine oil level on steep grades or too soon after engine shutoff can result in incorrect readings. Accuracy improves when checking a cold engine prior to starting. Remove the dipstick and check the level.
- If unable to wait two hours, the engine must be off for at least 15 minutes if the engine is warm, or at least 30 minutes if the engine is not warm. Pull out the dipstick, wipe it with a clean paper towel or cloth, then push it back in all the way. Remove it again, keeping the tip down, and check the level.

When to Add Engine Oil

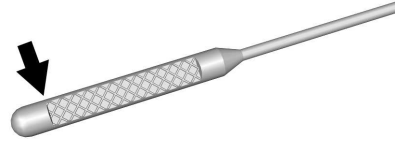

If the oil is below the cross-hatched area at the tip of the dipstick and the engine has been off for at least 15 minutes, add 1 L

(1 qt) of the recommended oil and then recheck the level. See "Selecting the Right Engine Oil" later in this section for an explanation of what kind of oil to use. For engine oil crankcase capacity, see *Capacities and Specifications* ⇨ *68*.

Caution

Do not add too much oil. Oil levels above or below the acceptable operating range shown on the dipstick are harmful to the engine. If the oil level is above the operating range (i.e., the engine has so much oil that the oil level gets above the cross-hatched area that shows the proper operating range), the engine could be damaged. Drain the excess oil or limit driving of the vehicle, and seek a service professional to remove the excess oil.

See *Engine Compartment Overview* ⇨ *45* for the location of the engine oil fill cap.

Be sure to add enough oil to put the level somewhere in the proper operating range. Push the dipstick all the way back in when through.

Selecting the Right Engine Oil

Specification

Oils designated as API CJ-4 or CK-4 are required for the vehicle. The CJ-4 or CK-4 designation can appear either alone or in combination with other American Petroleum Institute (API) designations, such as API CJ-4/SL. These letters show API levels of quality.

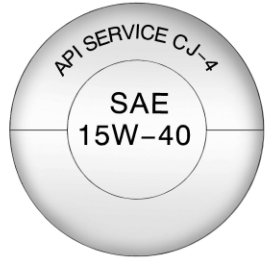

American Petroleum Institute (API) Symbol

This doughnut-shaped logo (symbol) is used on most oil containers to help you select the correct oil. It means that the oil has been certified by the American Petroleum Institute.

Look for this on the oil container, and use only those oils that display this logo.

Caution

Use only engine oils that have the designation CJ-4 or CK-4 for the diesel engine. Failure to use the recommended oil can damage the DPF and result in engine damage not covered by the vehicle warranty.

Viscosity Grade

Use SAE 15W-40 viscosity grade engine oil.

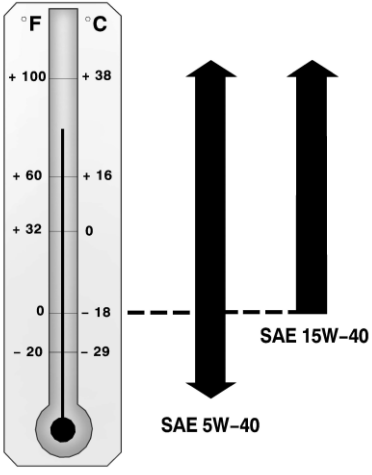

When it is very cold, below –18 °C (0 °F), use SAE 5W-40 to improve cold starting. These numbers on the oil container show its viscosity, or thickness.

When selecting an oil of the appropriate viscosity grade, always select an oil of the correct specification. See "Specification" earlier in this section.

Engine Oil Additives/Engine Oil Flushes — API

Do not add anything to the oil. The recommended oils with the API service symbol are all that is needed for good performance and engine protection.

Engine oil system flushes are not recommended and could cause engine damage not covered by the vehicle warranty.

What to Do with Used Oil

Used engine oil contains certain elements that can be unhealthy for your skin and could even cause cancer. Do not let used oil stay on your skin for very long. Clean your skin and nails with soap and water, or a good hand cleaner. Wash or properly dispose of clothing or rags containing used engine oil. See the manufacturer's warnings about the use and disposal of oil products.

Used oil can be a threat to the environment. If you change your own oil, be sure to drain all the oil from the filter before disposal.

Never dispose of oil by putting it in the trash or pouring it on the ground, into sewers, or into streams or bodies of water. Recycle it by taking it to a place that collects used oil.

Engine Oil Life System

The engine oil life system calculates engine oil life based on vehicle use and displays the CHANGE ENGINE OIL SOON message when it is time to change the engine oil and filter. The oil life system should be reset to 100% only following an oil change. See "Engine Oil Life System" in the owner's manual.

Automatic Transmission Fluid

When to Check and Change Automatic Transmission Fluid

It is usually not necessary to check the transmission fluid level. The only reason for fluid loss is a transmission leak or overheated transmission. This vehicle is not equipped with a transmission fluid level dipstick. There is a special procedure for checking and changing the transmission fluid in these vehicles. Because this procedure is difficult, this should be done at your dealer.

Contact your dealer for additional information or refer to the service manual for the procedure.

Caution

Use of the incorrect automatic transmission fluid may damage the vehicle, and the damage may not be covered by the vehicle warranty. Always use the correct automatic transmission fluid. See *Recommended Fluids and Lubricants* ⇨ *64*.

Change the fluid and filter at the scheduled maintenance intervals listed in *Maintenance Schedule* ⇨ *60*. Be sure to use the transmission fluid listed in *Recommended Fluids and Lubricants* ⇨ *64*.

Engine Air Filter Life System

If equipped, this feature provides the engine air filter's remaining life and best timing for a change. The timing to change an engine air filter depends on driving and environmental conditions.

When to Change the Engine Air Filter

When the Driver Information Center (DIC) displays a message to replace the engine air filter at the next oil change, follow this timing.

When the DIC displays a message to replace the engine air filter soon, replace the engine air filter at the earliest convenience.

The system must be reset after the engine air filter is changed.

If the DIC displays a message to check the engine air filter system, see your dealer.

How to Reset the Engine Air Filter Life System

To reset:

1. Place the vehicle in P (Park).
2. Display the Air Filter Life on the DIC. See *Driver Information Center (DIC)* ⇨ *8* in the owner's manual.
3. Press > on the steering wheel, or press the trip odometer reset stem if the vehicle does not have DIC controls, to move to the Reset/Disable display area. Select Reset, then press the thumbwheel or press the reset stem for several seconds.
4. Press the thumbwheel or the reset stem to confirm the reset.

Engine Air Cleaner/Filter

The engine air cleaner/filter is in the engine compartment. See *Engine Compartment Overview* ⇨ *45*.

When to Inspect the Engine Air Cleaner/Filter

If the vehicle is not equipped with the engine air filter life system, see *Maintenance Schedule* ⇨ *60* for intervals on inspecting and replacing the engine air cleaner/filter.

How to Inspect/Replace the Engine Air Cleaner/Filter

⚠ Warning

If part replacement is necessary, the part must be replaced with one of the same part number or with an equivalent part. Use of a replacement part without the same fit, form, and function may result in personal injury or damage to the vehicle.

Do not start the engine or have the engine running with the engine air filter housing open. Before removing the engine air filter,

make sure that the engine air filter housing and nearby components are free of dirt and debris. Remove the engine air filter. Lightly tap and shake the engine air filter (away from the vehicle) to release dust and dirt. Inspect the engine air filter for damage, and replace if damaged. Do not clean the engine air filter or components with water or compressed air. When changing the air filter, remove the dust valve from the front intake air duct and clean out any debris if necessary.

Caution
Water sprayed into or on the air intake box in the engine compartment may damage the air filter or electrical components. Do not spray water into or on the air intake box.

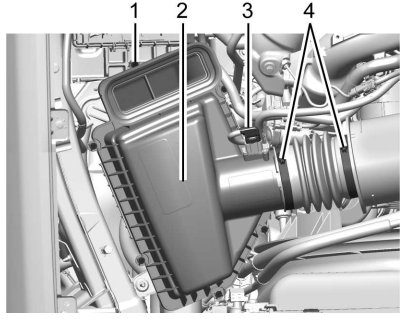

1. Screws (6)
2. Housing Cover
3. Electrical Connector
4. Clamps

To inspect and replace the filter:

1. Disconnect the wiring harness electrical connector (3) from the air cleaner/filter housing cover (2).
2. Loosen the screws on the clamps (4) holding the air outlet duct in place. Do not remove the clamps. Move the air duct aside.
3. Remove the six screws (1) from the housing cover (2).
4. Raise the housing cover. Take care not to move the air cleaner/filter housing base, to avoid any air leaks.
5. Remove the air cleaner/filter from the housing base. Take care to dislodge as little dirt as possible.

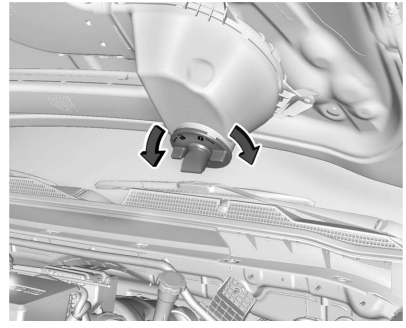

6. Turn the dust valve counterclockwise to remove from the front intake air duct. Check it for debris and clean out if necessary.
7. Turn the dust valve clockwise to reinstall.
8. Clean the air cleaner/filter sealing surface and the housing base.
9. Install the engine air cleaner/filter.
10. Lower the air cleaner/filter housing cover and secure with the six screws.

11. Move the air duct in place and tighten the two clamp screws.
12. Reinstall the wiring harness electrical connector.
13. If equipped, reset the engine air filter life system after replacing the engine air filter. See *Engine Air Filter Life System* ⇨ *49*.

⚠ Warning

Operating the engine with the air cleaner/filter off can cause you or others to be burned. Use caution when working on the engine. Do not start the engine or drive the vehicle with the air cleaner/filter off, as flames may be present if the engine backfires.

Caution

If the air cleaner/filter is off, dirt can easily get into the engine, which could damage it. Always have the air cleaner/filter in place when driving.

Cooling System (Engine)

The cooling system allows the engine to maintain the correct working temperature.

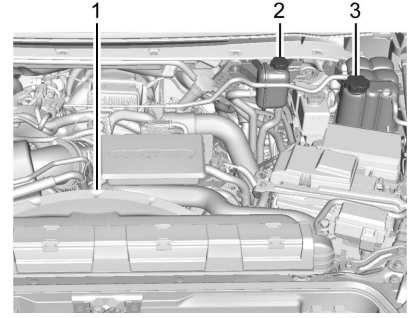

1. Engine Cooling Fan (Out of View)
2. Low Temp Cooling Circuit Coolant Reservoir and Pressure Cap
3. Engine Coolant Surge Tank and Pressure Cap

⚠ Warning

Do not touch heater or radiator hoses, or other engine parts. They can be very hot and can burn you. Do not run the engine if there is a leak; all coolant could leak out. That could cause an engine fire and can burn you. Fix any leak before driving the vehicle.

Engine Coolant

The cooling system in the vehicle is filled with DEX-COOL engine coolant mixture. See *Recommended Fluids and Lubricants* ⇨ *64* and *Maintenance Schedule* ⇨ *60*.

The following explains the cooling system and how to add coolant when it is low. If there is a problem with engine overheating, see *Engine Overheating* ⇨ *55*.

A 50/50 mixture of clean, drinkable water and DEX-COOL coolant will:

- Give freezing protection down to −37 °C (−34 °F).
- Give boiling protection up to 129 °C (265 °F).
- Protect against rust and corrosion.
- Help keep the proper engine temperature.
- Let the warning lights and gauges work as they should.

What to Use

⚠ Warning

Plain water, or other liquids such as alcohol, can boil before the proper coolant mixture will. With plain water or

(Continued)

Warning (Continued)

the wrong mixture, the engine could get too hot but there would not be an overheat warning. The engine could catch fire and you or others could be burned.

Use a 50/50 mixture of clean, drinkable water and DEX-COOL coolant which will not damage aluminum parts. If using this mixture, nothing else needs to be added.

If coolant has to be added more than four times a year, have your dealer check the vehicle cooling system.

Caution

Do not use anything other than a mix of DEX-COOL coolant that meets GM Standard GMW3420 and clean, drinkable water. Anything else can cause damage to the engine cooling system and the vehicle, which would not be covered by the vehicle warranty.

Never dispose of engine coolant by putting it in the trash, or by pouring it on the ground or into sewers, streams, or bodies of water. Have the coolant changed by an authorized service center, familiar with legal requirements regarding used coolant disposal. This will help protect the environment and your health.

Checking Coolant

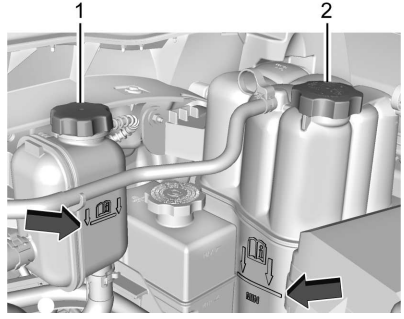

The coolant surge tank (2) is in the engine compartment on the driver side of the vehicle. See *Engine Compartment Overview* ⇨ *45* for location.

The vehicle must be on a level surface. When the engine is cold, the coolant level should be at the indicated mark.

Adding Coolant

Caution

If coolant is changed or added, always add enough to fill the system completely or engine damage may occur.

If more coolant is needed, add the proper DEX-COOL coolant mixture at the surge tank, but be careful not to spill it.

⚠ Warning

Spilling coolant on hot engine parts can burn you. Coolant contains ethylene glycol and it will burn if the engine parts are hot enough.

⚠ Warning

Steam and scalding liquids from a hot cooling system are under pressure. Turning the pressure cap, even a little, can cause them to come out at high speed and you could be burned. Never turn the cap when the cooling system, including the pressure cap, is hot. Wait for the cooling system and pressure cap to cool.

If no coolant is visible in the surge tank, add coolant as follows:

1. Remove the coolant surge tank pressure cap when the cooling system, including the coolant surge tank pressure cap and upper radiator hose, is no longer hot.

   Turn the pressure cap slowly counterclockwise about one-half turn. If a hiss is heard, wait for that to stop. A hiss means there is still some pressure left.

2. Keep turning the pressure cap slowly, and remove it.

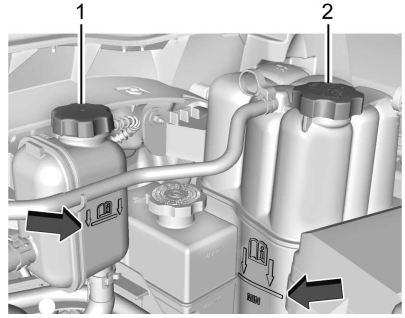

3. Slowly fill the coolant surge tank (2). Do not let the coolant level go above the indicated mark in the tank until after the engine comes to operating temperature in Step 4.

4. With the coolant surge tank pressure cap off, start the engine and let it run until the engine coolant temperature gauge indicates approximately 90 °C (195 °F).

   By this time, the coolant level inside the coolant surge tank may be lower. If the level is lower, slowly add more of the proper mixture to the coolant surge tank until it reaches the indicated mark.

5. Replace the pressure cap.

   Be sure the pressure cap is locked.

6. Verify coolant level after the engine is shut off and the coolant is cold.
   If necessary, repeat coolant fill procedure Steps 1–6.

If the coolant level is still low after having followed these steps twice, have the coolant system checked by a certified technician at the dealer for a possible leak.

Caution
If the pressure cap is not tightly installed, coolant loss and engine damage may occur. Be sure the cap is properly and tightly secured.

Cooling System (Low Temperature Cooling Circuit)

The cooling system allows the diesel fuel and diesel emission fluid injector to maintain the correct working temperature.

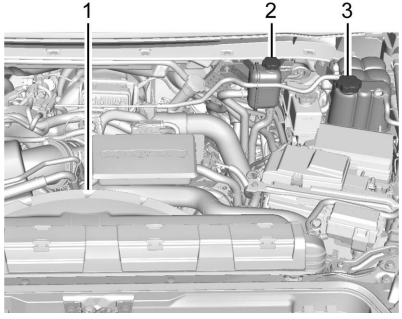

1. Engine Cooling Fan (Out of View)
2. Low Temperature Cooling Circuit Coolant Surge Tank and Pressure Cap
3. Engine Coolant Surge Tank and Pressure Cap

⚠ Warning

Do not touch heater or radiator hoses, or other engine parts. They can be very hot and can burn you. Do not run the engine if there is a leak; all coolant could leak out. That could cause an engine fire and can burn you. Fix any leak before driving the vehicle.

Low Temperature Cooling Circuit Coolant

The low temperature cooling circuit cooling system in the vehicle is filled with DEX-COOL engine coolant mixture. See *Recommended Fluids and Lubricants* ⇨ *64* and *Maintenance Schedule* ⇨ *60*.

The following explains the cooling system and how to add coolant when it is low. If there is a problem with engine overheating, see *Engine Overheating* ⇨ *55*.

A 50/50 mixture of clean, drinkable water and DEX-COOL coolant will:

- Give freezing protection down to −37 °C (−34 °F).
- Give boiling protection up to 129 °C (265 °F).
- Protect against rust and corrosion.
- Help keep the proper engine temperature.
- Let the warning lights and gauges work as they should.

What to Use

⚠ Warning

Plain water, or other liquids such as alcohol, can boil before the proper coolant mixture will. With plain water or

(Continued)

Warning (Continued)

the wrong mixture, the engine could get too hot but there would not be an overheat warning. The engine could catch fire and you or others could be burned.

Use a 50/50 mixture of clean, drinkable water and DEX-COOL coolant which will not damage aluminum parts. If using this mixture, nothing else needs to be added.

If coolant has to be added more than four times a year, have your dealer check the vehicle charge air cooling system.

Caution

Do not use anything other than a mix of DEX-COOL coolant that meets GM Standard GMW3420 and clean, drinkable water. Anything else can cause damage to the engine cooling system and the vehicle, which would not be covered by the vehicle warranty.

Never dispose of engine coolant by putting it in the trash, or by pouring it on the ground or into sewers, streams, or bodies of water. Have the coolant changed by an authorized service center, familiar with legal

requirements regarding used coolant disposal. This will help protect the environment and your health.

Checking Coolant

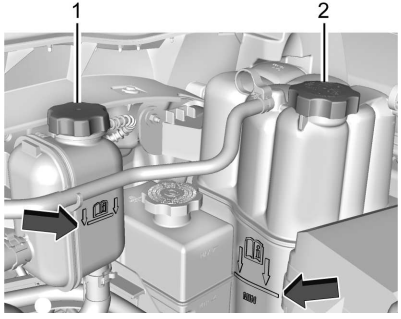

The low temperature cooling circuit coolant surge tank (1) is in the engine compartment on the driver side of the vehicle. See *Engine Compartment Overview* ⇨ *45* for location.

The vehicle must be on a level surface. When the engine is cold, the coolant level should be at the indicated mark.

Adding Coolant

If the coolant level in the low temperature cooling circuit coolant surge tank is low, see your dealer to have the system checked for leaks and purged of air, and the coolant level adjusted.

Engine Overheating

There is an engine coolant temperature gauge on the instrument cluster. See the owner's manual.

If Steam Is Coming from the Engine Compartment

⚠ Warning

Steam and scalding liquids from a hot cooling system are under pressure. Turning the pressure cap, even a little, can cause them to come out at high speed and you could be burned. Never turn the cap when the cooling system, including the pressure cap, is hot. Wait for the cooling system and pressure cap to cool.

Caution

Do not run the engine if there is a leak in the engine cooling system. This can cause a loss of all coolant and can damage the system and vehicle. Have any leaks fixed right away.

If No Steam Is Coming from the Engine Compartment

A Driver Information Center (DIC) message, along with a low coolant condition, can indicate a serious problem.

If there is an engine overheat warning and the vehicle does not have a low coolant condition, and no steam is heard or seen, the problem may not be too serious. Sometimes the engine can get a little too hot when the vehicle:

- Climbs a long hill on a hot day.
- Stops after high-speed driving.
- Idles for long periods in traffic.
- Tows a trailer. See "Driving on Grades" under "Driving Characteristics and Towing Tips" in the owner's manual.

If the DIC message comes on with no sign of steam, try this for a minute or so:

1. In heavy traffic, let the engine idle in N (Neutral) while stopped. If it is safe to do so, pull off the road, shift to P (Park) or N (Neutral), and let the engine idle.
2. Turn on the heater to full hot at the highest fan speed and open the window as necessary.

If the vehicle no longer has the overheat warning, the vehicle can be driven. Just to be safe, drive slower for about 10 minutes. If the warning does not come back on, drive normally and have the cooling system checked for proper fill and function.

If the warning continues, pull over, stop, and park the vehicle right away.

If there is still no sign of steam and the vehicle is equipped with an engine driven cooling fan, push down the accelerator until the engine speed is about twice as fast as normal idle speed for at least five minutes while the vehicle is parked. If the warning is still there, turn off the engine and get everyone out of the vehicle until it cools down.

If the Action Required - Idle Vehicle To Cool Engine DIC message displays, do not turn the engine off. Keep the engine running until the message goes away.

Intended Vehicle Use: After a Heavy Towing Event

If equipped, when the vehicle is turned off after towing heavy loads, the system may automatically restart the engine. A chime will sound and DIC messages will display. The engine will automatically turn off after 10–15 minutes of run time or if enough cooling has occurred.

If the DIC messages display after the vehicle has been stopped and placed in P (Park) with the engine still running, remain in the vehicle with the engine running until these messages no longer display. It may take up to 15 minutes of idling. Do not park the vehicle in an enclosed area if the messages display.

If the system determines that the engine should be restarted and the ignition is turned off, the engine will turn off and then automatically restart. If the engine is restarted, DIC messages display and chimes will sound. The vehicle cannot be shifted out of P (Park) unless the feature is overridden.

Never leave occupants in the vehicle, and always take the keys and lock the doors if you must leave the vehicle idling. Some local laws prohibit a vehicle from idling unattended. Always remain with the vehicle until it automatically turns off. This could take up to 15 minutes.

If the system determines that the vehicle was not allowed to restart, or if a condition such as an open hood has been detected, then DIC messages display and a chime will sound. To help with system performance, either restart the engine, or if the engine is not running and the hood can be safely opened after one minute, open the hood to allow cooling.

If the system has automatically restarted the engine, the vehicle cannot move until cooling has completed and the engine automatically turns off. Overriding this feature will allow normal vehicle operation. To override, start the vehicle as you would normally. Then either drive the vehicle as normal or turn off the ignition if you must exit the vehicle. Opening the hood will prevent the restart or will turn the engine off when this feature is active.

Interactions with Manual Regen

If the system has determined that the engine should be restarted, then the manual regen feature will not be allowed.

If manual regen has been enabled, and the system has determined that the engine should be restarted, there will be no chime or DIC messages related to the Diesel Engine After Run Feature until the manual regen completes. If the engine is turned off during the manual regen, a restart may occur without any alerts.

Engine Fan

The vehicle has a clutched engine cooling fan. When the clutch is engaged, the fan spins faster to provide more air to cool the engine. In most everyday driving conditions, the fan is spinning slower and the clutch is not fully engaged. This improves fuel economy and reduces fan noise. Under heavy vehicle loading, trailer towing, and/or high outside temperatures, the fan speed increases as the clutch more fully engages, so an increase in fan noise may be heard. This is normal and should not be mistaken as the transmission slipping or making extra shifts. It is merely the cooling system functioning properly. The fan will slow down when additional cooling is not required and the clutch partially disengages.

This fan noise may be heard when starting the engine. It will go away as the fan clutch partially disengages.

Electrical System

Engine Compartment Fuse Block

For additional fuse and electrical information, see “Electrical System” in the owner’s manual.

The Auxilary fuse block is in the engine compartment, on the driver side of the vehicle.

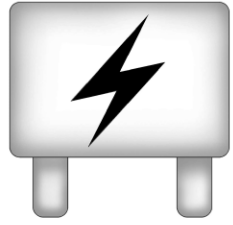

Lift the cover to access the fuse block.

Caution

Spilling liquid on any electrical component on the vehicle may damage it. Always keep the covers on any electrical component.

A fuse puller is available in the left instrument panel end cap.

The vehicle may not be equipped with all the fuses, relays, and features shown.

⚠ Danger

Fuses and circuit breakers are marked with their ampere rating. Do not exceed the specified amperage rating when replacing fuses and circuit breakers. Use of an oversized fuse or circuit breaker can result in a vehicle fire. You and others could be seriously injured or killed.

Auxiliary Fuse Block

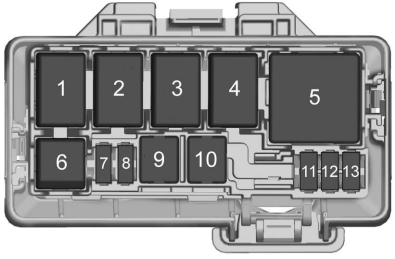

Fuses	Usage
7	Powertrain sensor
8	—
9	Diesel exhaust fluid control
10	Fuel heater
11	Smart sensors
12	SCRPM
13	100 watt pump/—

Relays	Usage
1	Diesel exhaust fluid control
2	Fuel heater
3	100 watt pump (LD)
4	Powertrain sensor (LD)
5	Cooling fan clutch (HD)
6	Powertrain sensor (HD)

Appearance Care

Exterior Care

See the owner's manual for additional exterior care information.

Caution
Water sprayed into or on the air intake box in the engine compartment may damage the air filter or electrical components. Do not spray water into or on the air intake box.

Service and Maintenance

General Information
General Information 59

Maintenance Schedule
Maintenance Schedule 60

Recommended Fluids, Lubricants, and Parts
Recommended Fluids and Lubricants ... 64
Maintenance Replacement Parts 65

Maintenance Records
Maintenance Records 66

General Information

This maintenance section applies to vehicles with a diesel engine. For gasoline engine vehicles, see the maintenance schedule section in the owner's manual.

Your vehicle is an important investment. This section describes the required maintenance for the vehicle. Follow this schedule to help protect against major repair expenses resulting from neglect or inadequate maintenance. It may also help to maintain the value of the vehicle if it is sold. It is the responsibility of the owner to have all required maintenance performed.

Your dealer has trained technicians who can perform required maintenance using genuine replacement parts. They have up-to-date tools and equipment for fast and accurate diagnostics. Many dealers have extended evening and Saturday hours, courtesy transportation, and online scheduling to assist with service needs.

Your dealer recognizes the importance of providing competitively priced maintenance and repair services. With trained technicians, your dealer is the place for routine maintenance such as oil changes and tire rotations and additional maintenance items like tires, brakes, batteries, and wiper blades.

Caution

Damage caused by improper maintenance can lead to costly repairs and may not be covered by the vehicle warranty. Maintenance intervals, checks, inspections, recommended fluids, and lubricants are important to keep the vehicle in good working condition.

Do not have chemical flushes that are not approved by GM performed on the vehicle. The use of flushes, solvents, cleaners, or lubricants that are not approved by GM could damage the vehicle, requiring expensive repairs that are not covered by the vehicle warranty.

The Tire Rotation and Required Services are the responsibility of the vehicle owner. It is recommended to have your dealer perform these services every 12 000 km/7,500 mi. Proper vehicle maintenance helps to keep the vehicle in good working condition, improves fuel economy, and reduces vehicle emissions.

Because of the way people use vehicles, maintenance needs vary. There may need to be more frequent checks and services. The Additional Required Services - Normal are for vehicles that:

- Carry passengers and cargo within recommended limits on the Tire and Loading Information label. See "Vehicle Load Limits" in the owner's manual.
- Are driven on reasonable road surfaces within legal driving limits.
- Use the recommended fuel. See *Fuel for Diesel Engines* ⇨ *22*.

Refer to the information in the Maintenance Schedule Additional Required Services - Normal chart.

The Additional Required Services - Severe are for vehicles that are:

- Mainly driven in heavy city traffic in hot weather.
- Mainly driven in hilly or mountainous terrain.
- Frequently towing a trailer.
- Used for high speed or competitive driving.
- Used for taxi, police, or delivery service.

Refer to the information in the Maintenance Schedule Additional Required Services - Severe chart.

⚠ Warning

Performing maintenance work can be dangerous and can cause serious injury. Perform maintenance work only if the required information, proper tools, and equipment are available. If they are not, see your dealer to have a trained technician do the work. See "Doing Your Own Service Work" in the owner's manual.

Maintenance Schedule

See the owner's manual for other services and intervals that may be required.

Owner Checks and Services

Check the engine oil level. See *Engine Oil* ⇨ *46*.

Check the DEF percentage at each fuel stop. See *Diesel Exhaust Fluid* ⇨ *18*.

Engine Oil Change

When the CHANGE ENGINE OIL SOON message displays, have the engine oil and filter changed within the next 1 000 km/ 600 mi. If driven under the best conditions, the engine oil life system may not indicate the need for vehicle service for up to a year. The engine oil and filter must be changed at least once a year and the oil life system must be reset. Your trained dealer technician can perform this work. If the engine oil life system is reset accidentally, service the vehicle within 5 000 km/3,000 mi since the last service. Reset the oil life system when the oil is changed. See *Engine Oil Life System* ⇨ *48*.

Engine Air Filter Change

When the REPLACE AT NEXT OIL CHANGE message displays, the engine air filter should be replaced at the next engine oil change. When the REPLACE ENGINE AIR FILTER SOON message displays, the engine air filter should be replaced at the earliest convenience. Reset the engine air filter life system after the engine air filter is replaced. See *Engine Air Filter Life System* ⇨ *49*.

Power Take Off (PTO) and Extended Idle Use

When the vehicle is used with the PTO equipment or used in a way that requires extended idle time, one hour of use shall be deemed the same as 53 km (33 mi). See Driver Information Center (DIC) for hourmeter, if equipped.

Required Services Every 12 000 km/ 7,500 mi

- Check engine oil level and oil life percentage. If needed, change engine oil and filter, and reset oil life system. See *Engine Oil* ⇨ *46* and *Engine Oil Life System* ⇨ *48*.
- Check the air filter life percentage. If necessary, replace the engine air filter and reset the engine air filter life system. See *Engine Air Filter Life System* ⇨ *49*.
- Check engine coolant level. See *Cooling System (Low Temperature Cooling Circuit)* ⇨ *53* or *Cooling System (Engine)* ⇨ *51*.
- Visually check for fluid leaks.
- Visually inspect fuel system for damage or leaks.
- Visually inspect exhaust system and nearby heat shields for loose or damaged parts.

Maintenance Schedule Additional Required Services - Normal	12 000 km/7,500 mi	24 000 km/15,000 mi	36 000 km/22,500 mi	48 000 km/30,000 mi	60 000 km/37,500 mi	72 000 km/45,000 mi	84 000 km/52,500 mi	96 000 km/60,000 mi	108 000 km/67,500 mi	120 000 km/75,000 mi	132 000 km/82,500 mi	144 000 km/90,000 mi	156 000 km/97,500 mi	168 000 km/105,000 mi	180 000 km/112,500 mi	192 000 km/120,000 mi	204 000 km/127,500 mi	216 000 km/135,000 mi	228 000 km/142,500 mi	240 000 km/150,000 mi
Perform Required Services. Check engine oil level and oil life percentage. Change engine oil and filter, if needed. Check engine air filter life percentage and status. Change engine air filter, if needed. (1)	✓	✓	✓	✓	✓	✓	✓	✓	✓	✓	✓	✓	✓	✓	✓	✓	✓	✓	✓	✓
Drain and fill engine cooling system. (2)																				✓
Visually inspect accessory drive belts. (3)																				✓
Replace fuel filter. (4)			✓			✓			✓			✓			✓			✓		

Footnotes — Maintenance Schedule Additional Required Services - Normal

(1) If driving in dusty conditions, inspect the filter at each oil change or more often as needed. See *Engine Air Cleaner/Filter* ⇨ *49*.

(2) Or every five years, whichever comes first. See *Cooling System (Low Temperature Cooling Circuit)* ⇨ *53* or *Cooling System (Engine)* ⇨ *51*.

(3) Or every 10 years, whichever comes first. Inspect for fraying, excessive cracking, or damage; replace, if needed.

(4) Or every two years, or when the CHANGE FUEL FILTER message in the Driver Information Center (DIC) comes on, whichever comes first. The fuel filter may need to be replaced more often based on biodiesel usage, driving in climates with severe dust, off-road driving, or towing a trailer for extended periods.

Maintenance Schedule Additional Required Services - Severe	12 000 km/7,500 mi	24 000 km/15,000 mi	36 000 km/22,500 mi	48 000 km/30,000 mi	60 000 km/37,500 mi	72 000 km/45,000 mi	84 000 km/52,500 mi	96 000 km/60,000 mi	108 000 km/67,500 mi	120 000 km/75,000 mi	132 000 km/82,500 mi	144 000 km/90,000 mi	156 000 km/97,500 mi	168 000 km/105,000 mi	180 000 km/112,500 mi	192 000 km/120,000 mi	204 000 km/127,500 mi	216 000 km/135,000 mi	228 000 km/142,500 mi	240 000 km/150,000 mi
Perform Required Services. Check engine oil level and oil life percentage. Change engine oil and filter, if needed. Check engine air filter life percentage and status. Change engine air filter, if needed. (1)	✓	✓	✓	✓	✓	✓	✓	✓	✓	✓	✓	✓	✓	✓	✓	✓	✓	✓	✓	✓
If the vehicle is not equipped with the engine air filter life system, replace engine air cleaner filter. (1)						✓						✓						✓		
Change automatic transmission fluid and filter.						✓						✓						✓		
Drain and fill engine cooling system. (2)																				✓
Visually inspect accessory drive belts. (3)																				✓
Replace fuel filter. (4)			✓			✓			✓			✓			✓			✓		

Footnotes — Maintenance Schedule Additional Required Services - Severe

(1) If driving in dusty conditions, inspect the filter at each oil change or more often as needed. See *Engine Air Cleaner/Filter* ⇨ *49*.

(2) Or every five years, whichever comes first. See *Cooling System (Low Temperature Cooling Circuit)* ⇨ *53* or *Cooling System (Engine)* ⇨ *51*.

(3) Or every 10 years, whichever comes first. Inspect for fraying, excessive cracking, or damage; replace, if needed.

(4) Or every two years, or when the CHANGE FUEL FILTER message in the Driver Information Center (DIC) comes on, whichever comes first. The fuel filter may need to be replaced more often based on biodiesel usage, when driving in climates with excessive dust, or when off-road driving or towing a trailer for extended periods.

Recommended Fluids, Lubricants, and Parts

Recommended Fluids and Lubricants

The following fluids apply to vehicles with a Duramax diesel engine. For other fluids not listed here, see “Recommended Fluids and Lubricants” in the owner’s manual.

Fluids and lubricants identified below by name or specification, including fluids or lubricants not listed here, can be obtained from your dealer.

Usage	Fluid/Lubricant
Automatic Transmission	DEXRON ULV Automatic Transmission Fluid.
Diesel Exhaust Aftertreatment System	Diesel Exhaust Fluid that meets ISO 22241 or displays the API Diesel Exhaust Fluid Certification Mark.
Engine Coolant	50/50 mixture of clean, drinkable water and use only DEX-COOL coolant. See *Cooling System (Low Temperature Cooling Circuit)* ⇨ *53* or *Cooling System (Engine)* ⇨ *51*.
Engine Oil	Engine oils with the letters CJ-4 or CK-4 are required for your vehicle. The CJ-4 or CK-4 designation can appear either alone or in combination with other American Petroleum Institute (API) designations, such as API CJ-4/SL. These letters show API levels of quality. To determine the preferred viscosity for your vehicle's diesel engine, see *Engine Oil* ⇨ *46*.
Hydraulic Power Steering System	GM Power Steering Fluid. See your dealer.

Maintenance Replacement Parts

Replacement parts identified below by name, part number, or specification can be obtained from your dealer.

Part	GM Part Number	ACDelco Part Number
Engine Air Cleaner/Filter	84554703	A3248C
Fuel Filter	23304096	TP1015
Engine Oil Filter	12684038	PF26
Use only the specified filters.		

Maintenance Records

After the scheduled services are performed, record the date, odometer reading, who performed the service, and the type of services performed in the boxes provided. Retain all maintenance receipts.

Date	Odometer Reading	Serviced By	Services Performed

Technical Data

Vehicle Data

Capacities and Specifications 68
Engine Drive Belt Routing 69

Vehicle Data

Capacities and Specifications

The following approximate capacities are given in metric and English conversions. See *Recommended Fluids and Lubricants* ⇨ *64*.

Application	Capacities	
	Metric	English
Engine Cooling System*	28.5 L	30.1 qt
Low Temperature Cooling Circuit Cooling System*	1.9 L	2.0 qt
Diesel Exhaust Fluid (DEF) Tank**	26.5 L	7.0 gal
Engine Oil with Filter	9.5 L	10.0 qt
Transfer Case Fluid	2.3 L	2.4 qt
Hydraulic Power Steering Fluid	2.0 L	2.1 qt
*Engine cooling system capacity values are based on the entire cooling system and its components.		
**Do not overfill the DEF tank. See *Diesel Exhaust Fluid* ⇨ *18*.		
All quantities are approximate. When adding, be sure to fill to the appropriate level, as recommended in this manual. Recheck fluid level after filling.		

Engine Specifications

Engine	VIN Code	Type
6.6L 8-Cylinder Turbo Diesel (L5P Engine)	Y	V8

Engine Drive Belt Routing

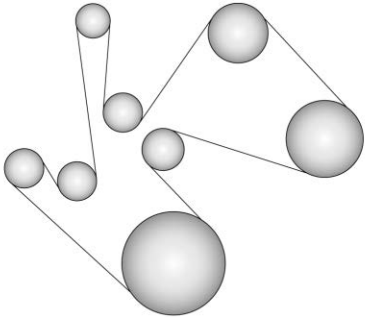

6.6L 8-Cylinder Engine (Single Generator)

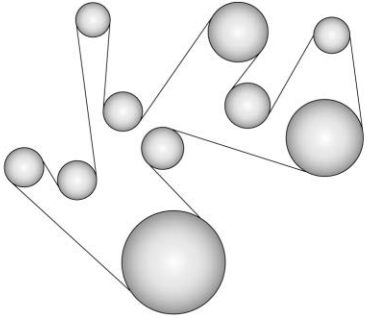

6.6L 8-Cylinder Engine (Dual Generator)

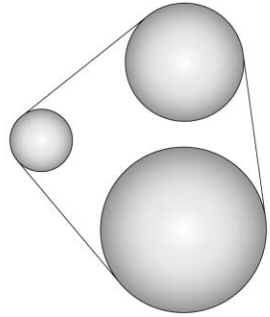

Fan Drive Belt Routing (Secondary/Auxiliary Drive)

Index

A

Accessories and Modifications 44
Air Cleaner/Filter, Engine 49
Air Filter
  Life System 49
Appearance Care
  Exterior 58
Automatic
  Transmission Fluid 48

B

Biodiesel 23
Brake
  Exhaust 21

C

Canadian Vehicle Owners 1
Capacities and Specifications 68
Check
  Engine Light (Malfunction Indicator) 6
Cleaning
  Exterior Care 58
Cluster, Instrument 3
Cold Weather Operation 23
Cooling System 51, 53
Covers
  Winter 14

D

Diesel
  Starting Your Engine 11
Diesel Exhaust Fluid 18
Diesel Exhaust Fluid (DEF) Warning
  Light 8
Diesel Particulate Filter 17
Drive Belt Routing, Engine 69
Driver Information Center (DIC) 8

E

Electrical System
  Engine Compartment Fuse Block 57
Engine
  Air Cleaner/Filter 49
  Check Light (Malfunction Indicator) 6
  Compartment Overview 45
  Cooling System 51, 53
  Drive Belt Routing 69
  Fan 57
  Heater 17
  Oil Life System 48
  Overheating 55
  Starting Your Diesel 11
Engine Air Filter Life System 49
Engines
  Diesel Fuel 22
Exhaust Brake 21

Exhaust Fluid
Diesel 18

F

Fan
Engine 57
Filter 17
Replacement (Fuel) 26
Filter,
Engine Air Cleaner 49
Fluid
Automatic Transmission 48
Fuel
Additives 22
Biodiesel 23
Cold Weather Operation 23
Diesel Engines 22
Filling a Portable Fuel Container 28
Filling the Tank 27
Filter Replacement 26
Running out of Fuel 26
Top Tier 21
Water in Fuel 24
Fuel for Diesel Engines 22
Fuses
Engine Compartment Fuse Block 57

G

General Information
Service and Maintenance 59

H

Heater
Engine 17

I

Instrument Cluster 3
Introduction 1

L

Lamps
Malfunction Indicator (Check Engine) 6
Lights
Check Engine (Malfunction Indicator) 6
Diesel Exhaust Fluid (DEF) 8
Power Take-off 8
Wait to Start 7

M

Maintenance
Records 66
Maintenance Schedule 60
Recommended Fluids and Lubricants 64
Malfunction Indicator Lamp 6

O

Oil
Engine 46
Engine Oil Life System 48
Overheating, Engine 55

P

Personalization
Vehicle 9
Power Take-Off (PTO) 29
Power Take-Off Light 8

R

Recommended Fluids and Lubricants 64
Records
Maintenance 66
Replacement Parts
Maintenance 65
Routing, Engine Drive Belt 69
Running out of Fuel 26

S

Service
Accessories and Modifications 44
Maintenance Records 66
Maintenance, General Information 59
Specifications and Capacities 68
Starting the Diesel Engine 11

Supplement
Using 2
System
Engine Air Filter Life 49

T

Top Tier Fuel 21
Towing
Trailer 28
Trailer
Towing 28
Transmission
Fluid, Automatic 48

U

Using This Supplement 2

V

Vehicle
Canadian Owners 1
Personalization 9

W

Wait to Start Light 7
Water in Fuel 24
Winter Cover 14

Certified Service

84557035 C