POWER DOOR LOCK CONTROL SYSTEM

PARTS LOCATION

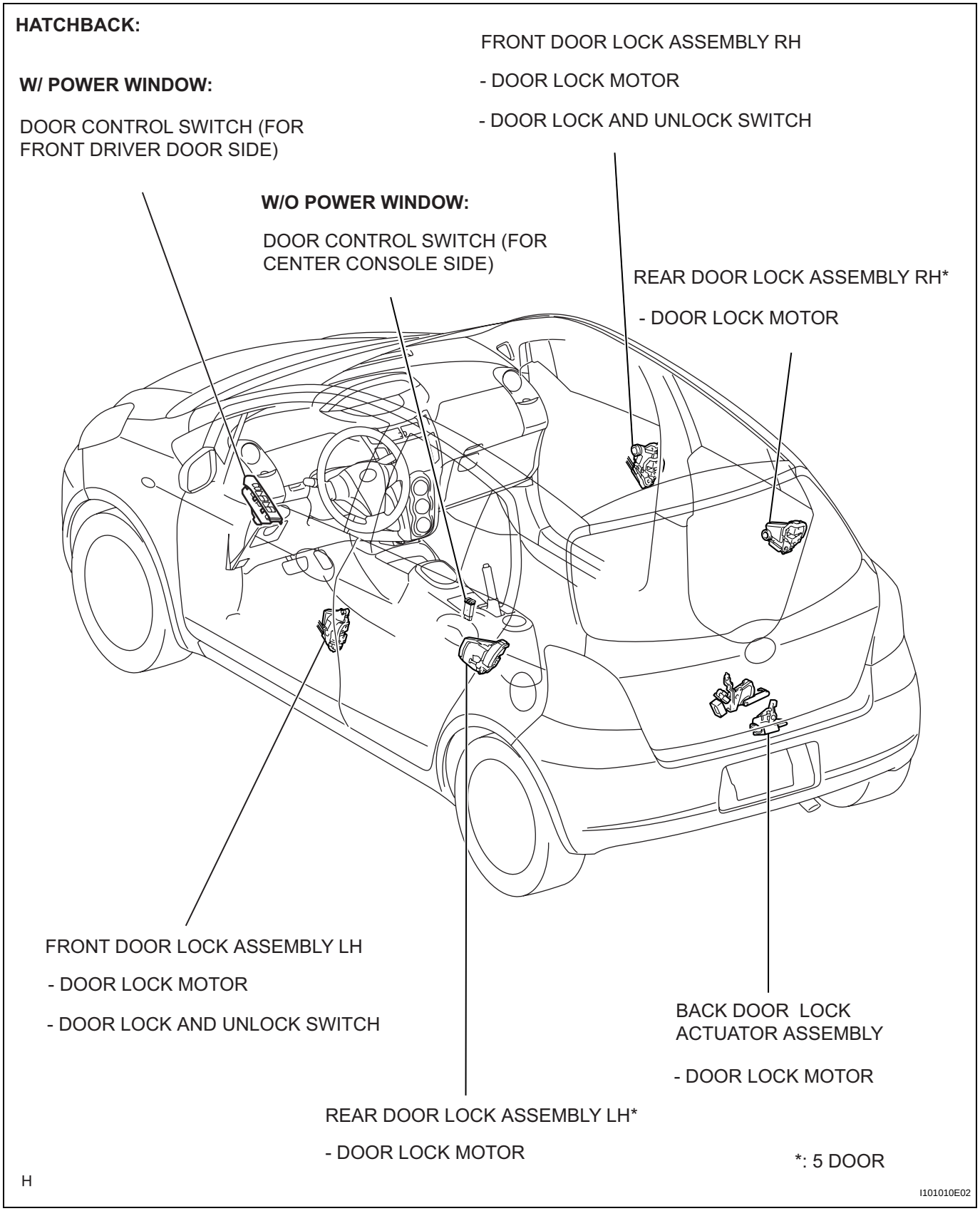

DL

SEDAN:

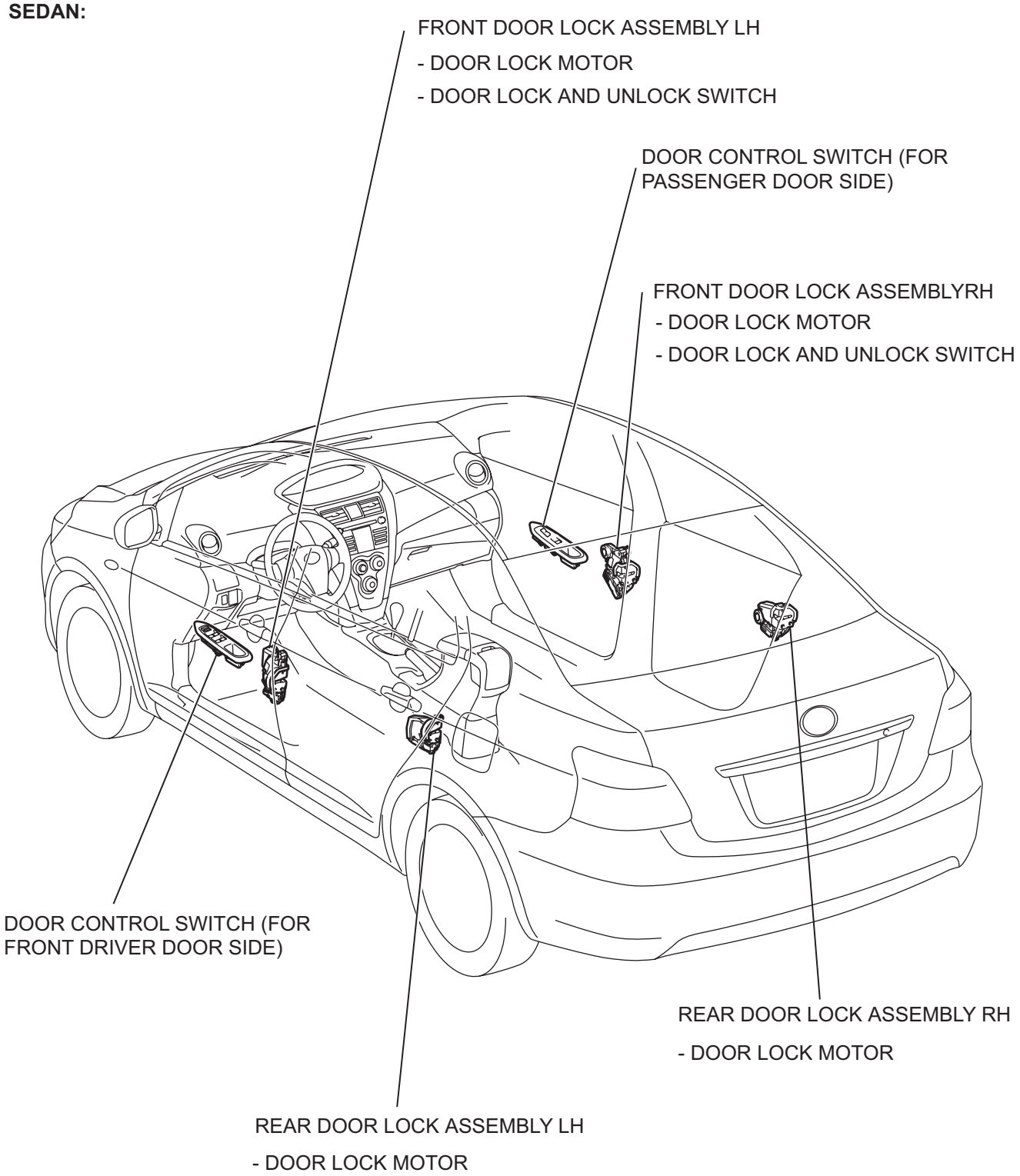

B145635E01

HATCHBACK:

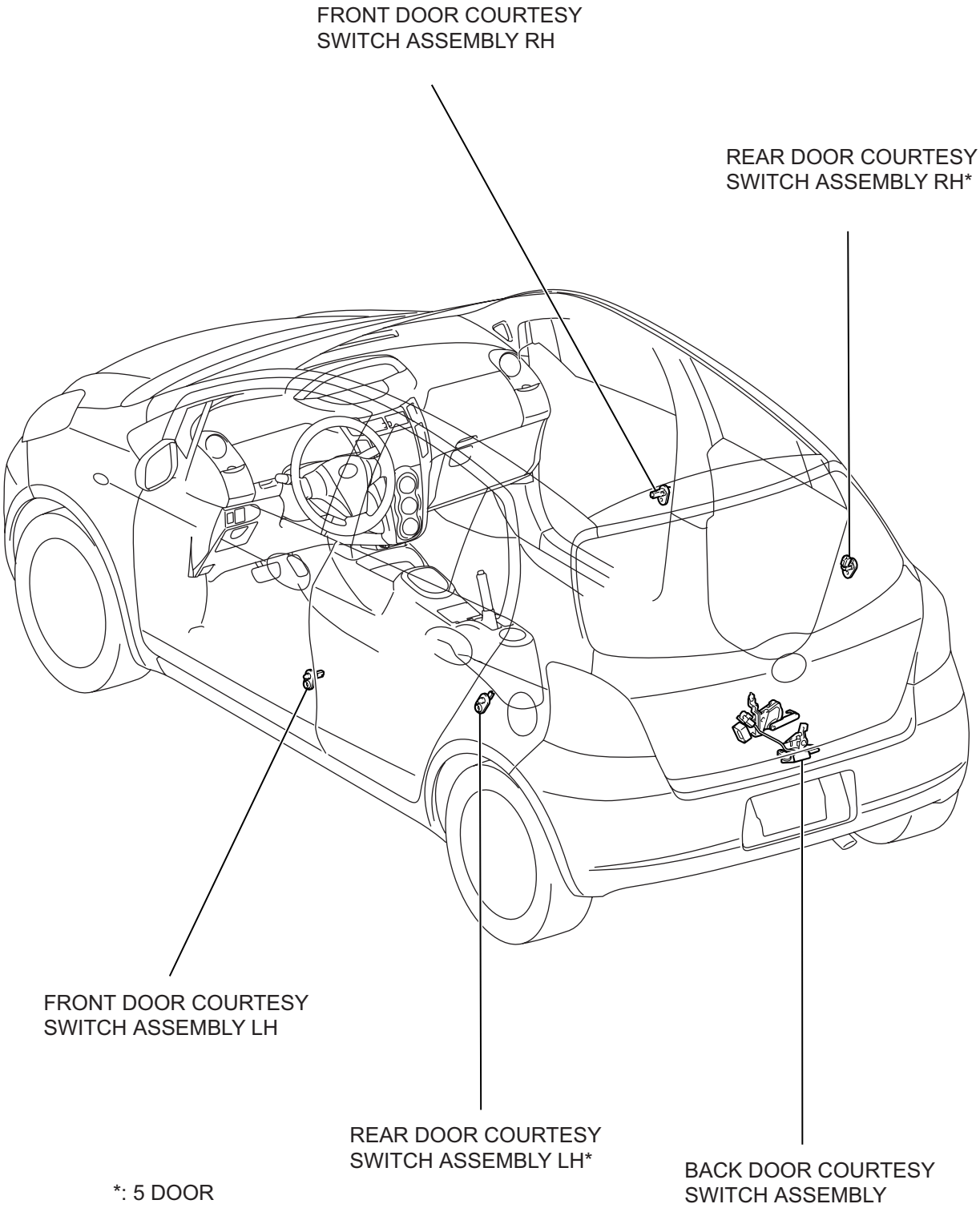

*: 5 DOOR

H

B123850E02

SEDAN:

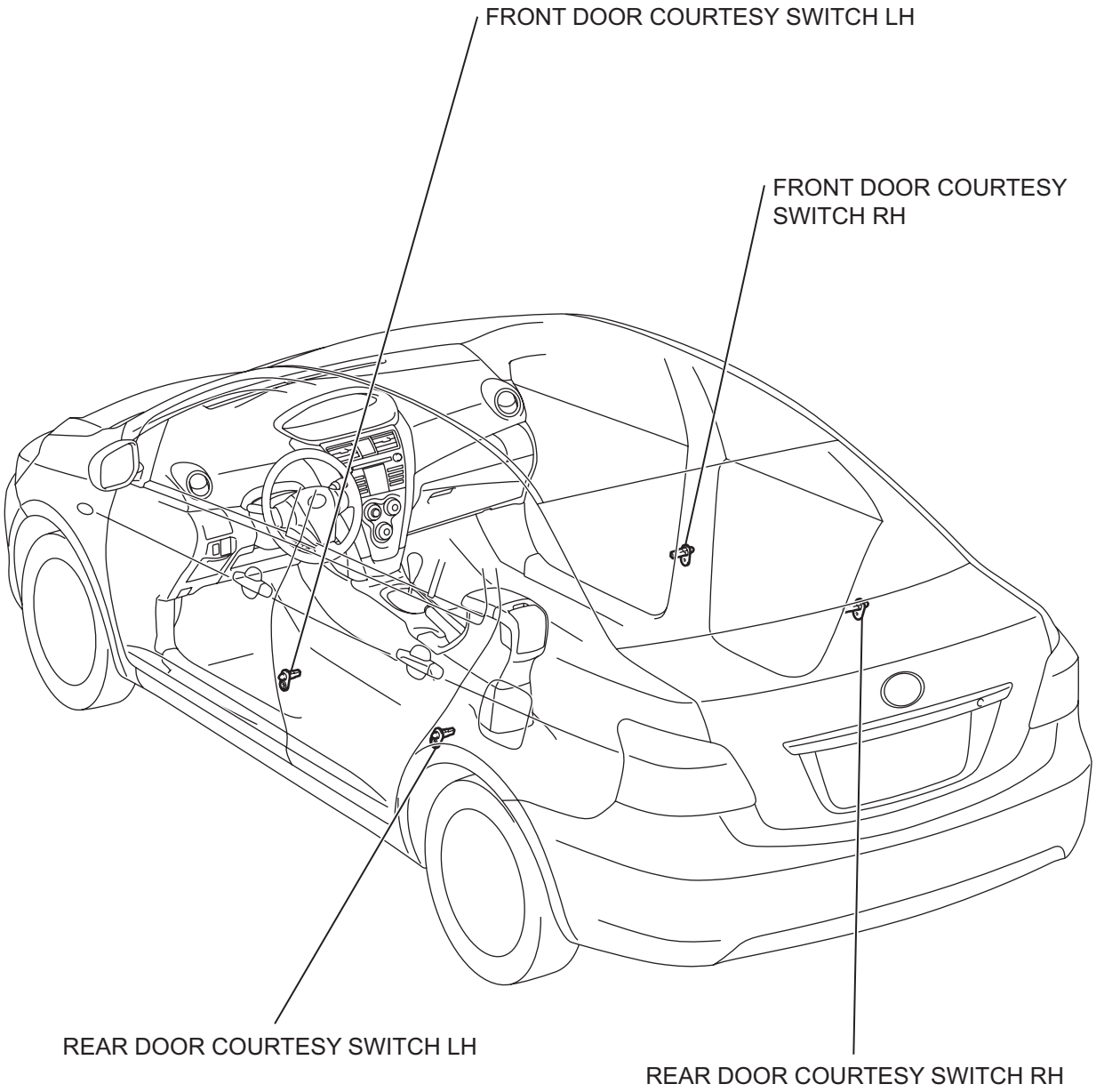

H

B140310E01

HATCHBACK:

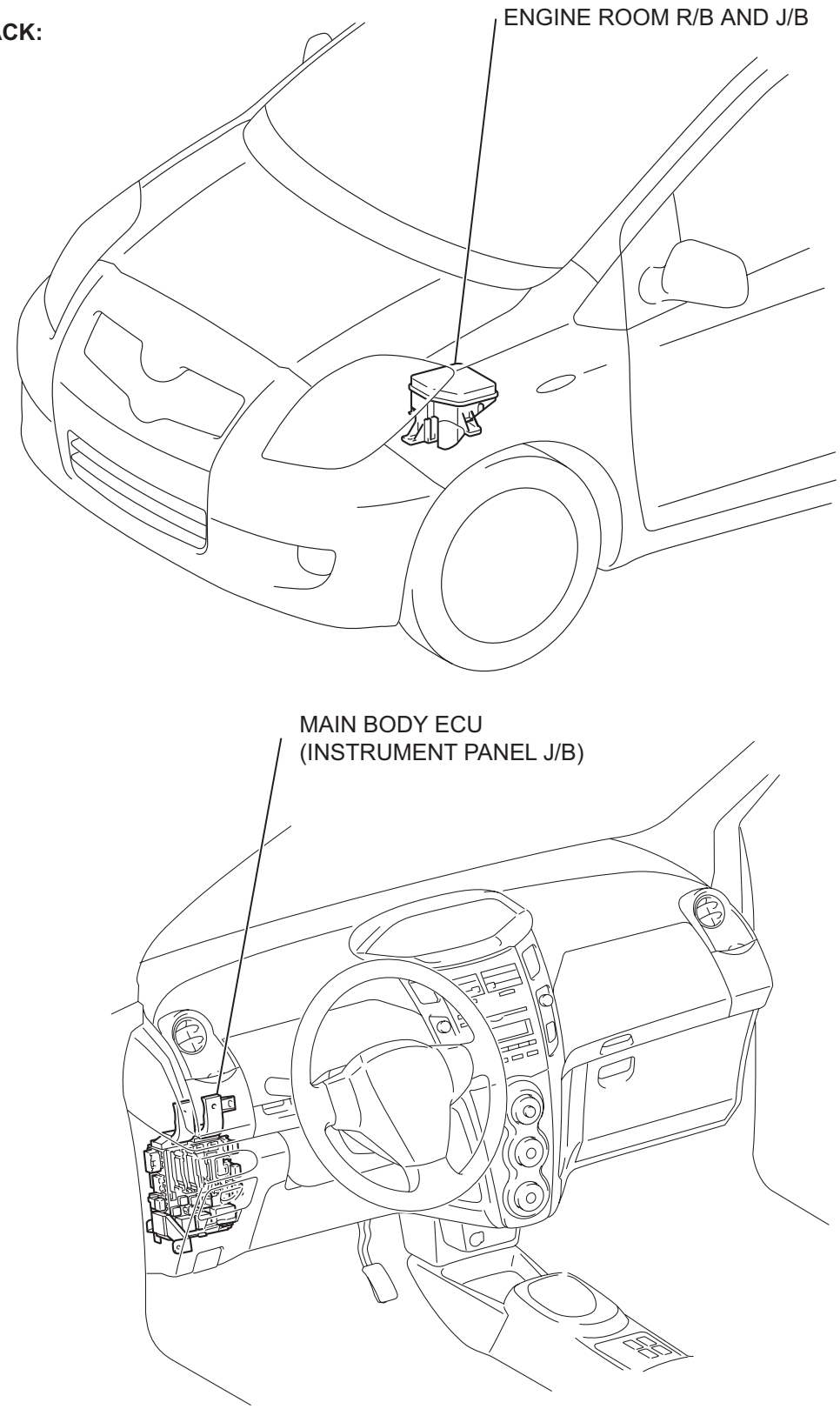

Y

I101011E08

SEDAN:

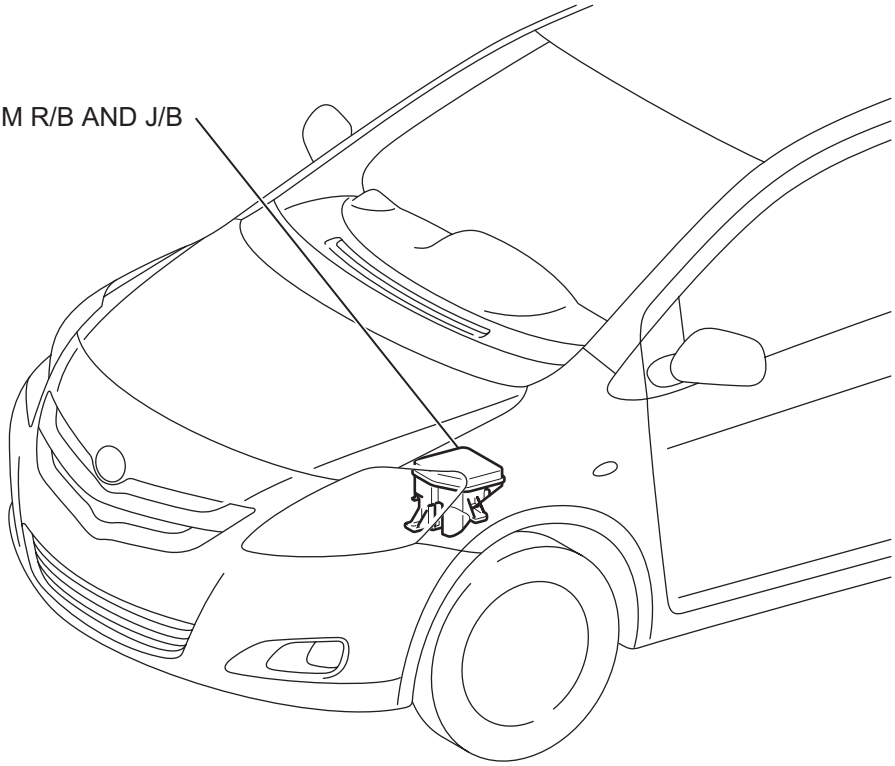

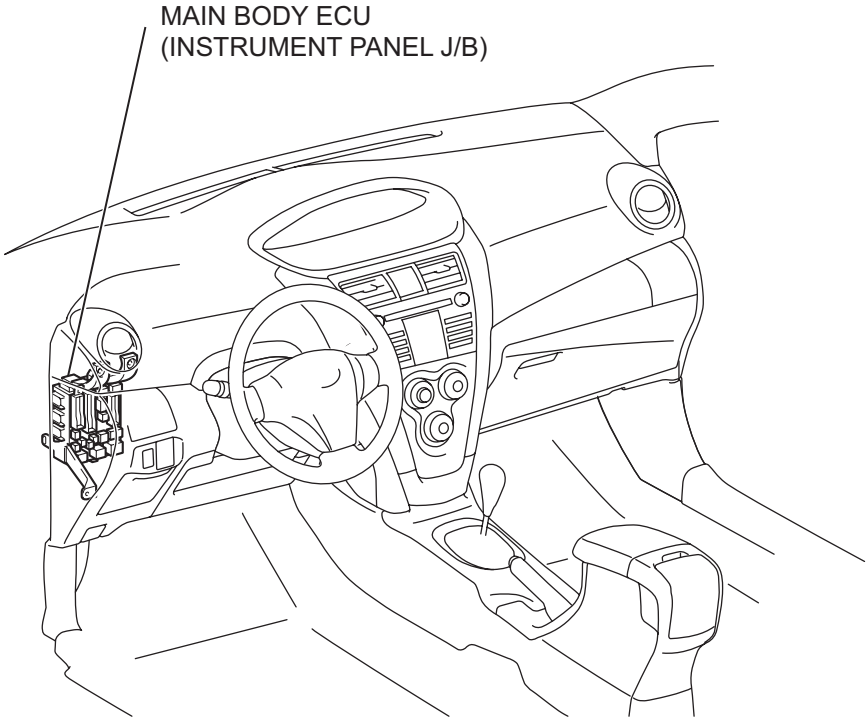

B142328E04

SYSTEM DIAGRAM

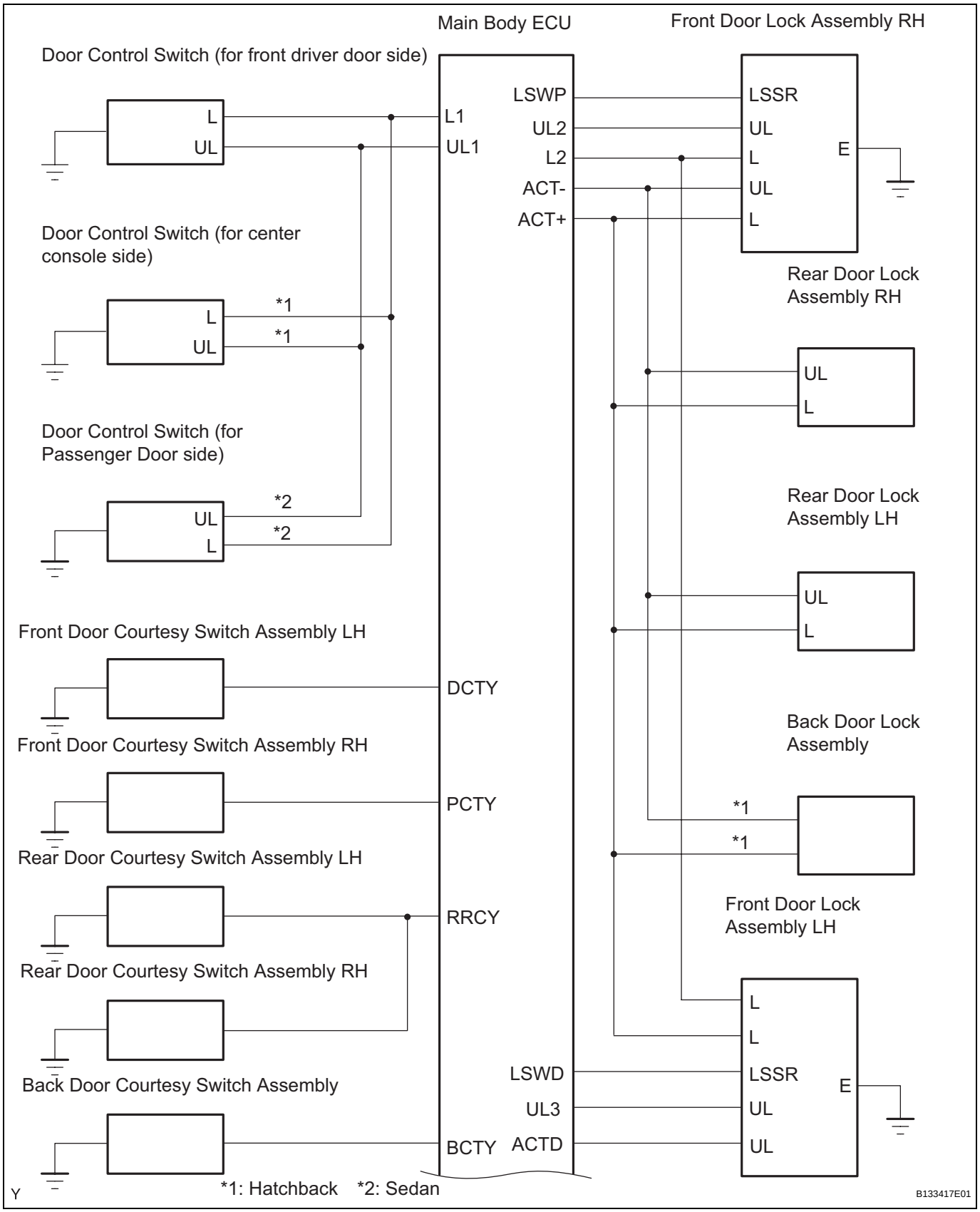

DL

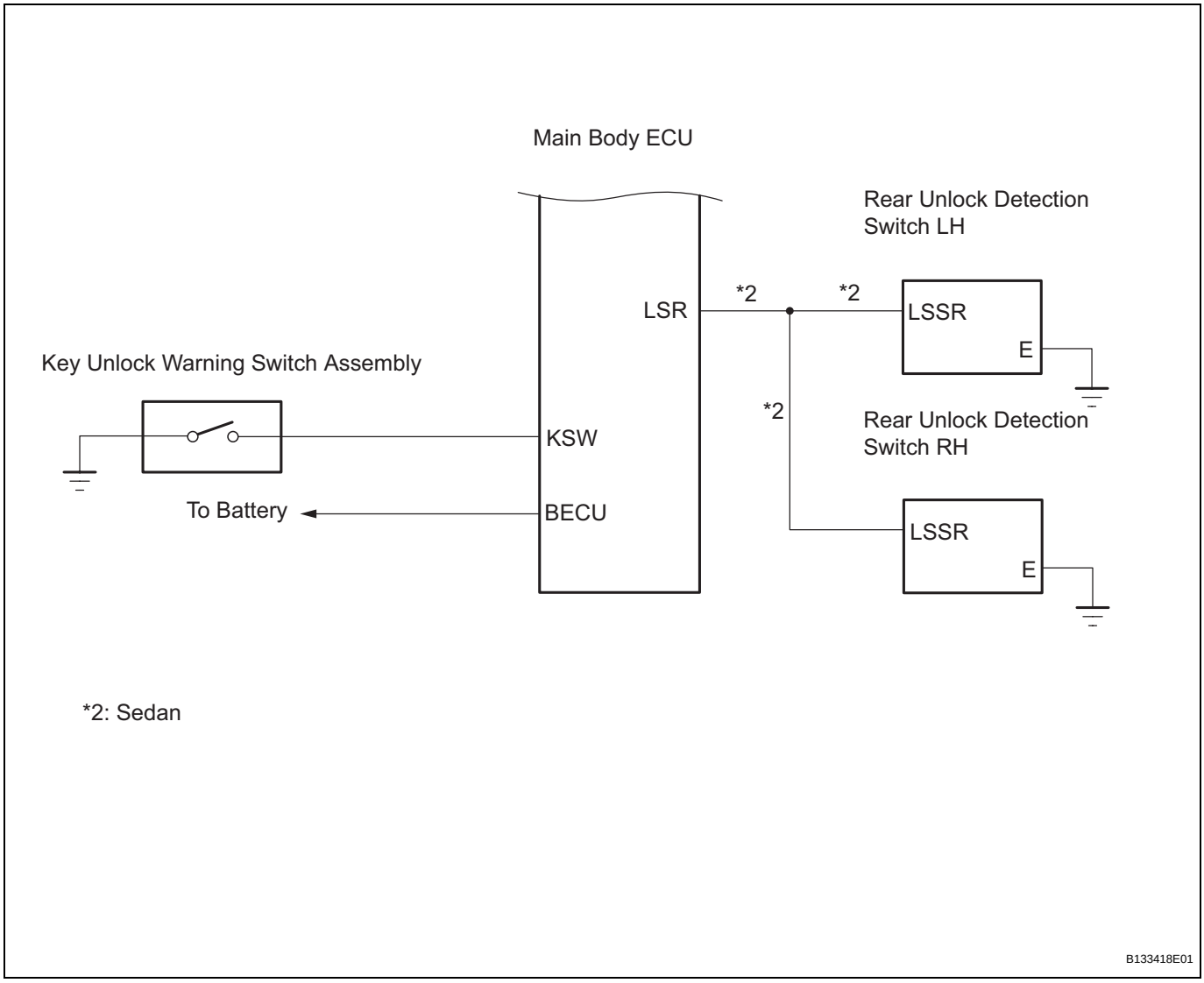
Main Body ECU
Rear Unlock Detection Switch LH
LSR
*2
*2
LSSR
E
Key Unlock Warning Switch Assembly
*2
Rear Unlock Detection Switch RH
KSW
To Battery
BECU
LSSR
E
*2: Sedan
B133418E01

SYSTEM DESCRIPTION

1. POWER DOOR LOCK CONTROL SYSTEM DESCRIPTION

The power door lock system locks / unlocks all the doors simultaneously.
The door control switch sends lock / unlock request signals to the main body ECU. Then, the main body ECU sends these requests to lock motors in each door to lock / unlock all the doors simultaneously. Operating the driver or front passenger side door lock using a key sends lock / unlock request signals to the main body ECU.

2. FUNCTION OF MAIN COMPONENT

Component	Function
Master switch	Door control switch (for front driver door side) on master switch locks / unlocks all doors
Door courtesy switch	• One for each door • Detects door status (open or closed) and outputs data to integration relay • Turns on when door is open and off when door is closed
Driver door lock	• Built-in motor locks / unlocks door • Built-in door control switch (key-linked) detects door lock status (locked or unlocked) and outputs data to integration relay
Passenger door, rear LH door, rear RH door and back door locks	Built-in motor locks / unlocks doors

3. DESCRIPTION

This system is controlled by the main body ECU. The main body ECU outputs signals to each door lock motor. The door lock control system in the vehicle has the following functions:

Function	Outline
Manual lock and unlock function	Locks / unlocks all doors by door control switch lock operation (manual operation)
Key-linked lock and unlock function	• Linked with driver door key cylinder • Locks / unlocks all doors when lock / unlock operation is possible • Driver side door key-linked lock / unlock function does not operate when seat belt is fastened
Key-linked 2-step unlock	This function is provided to unlock driver's door by turning key cylinder first step and to unlock all doors by turning it second step. However, second step must be performed within three seconds.
All doors lock with transmitter*	Pressing transmitter's LOCK switch locks all doors
All doors unlock with transmitter*	Pressing transmitter's UNLOCK switch unlocks all doors

HINT:
*: Only for models with wireless door lock system

HOW TO PROCEED WITH TROUBLESHOOTING

HINT:
Use these procedures to troubleshoot the power door lock control system.

1 VEHICLE BROUGHT TO WORKSHOP

NEXT

2 INSPECT BATTERY VOLTAGE

Standard voltage:
11 to 14 V
If the voltage is below 11 V, recharge or replace the battery before proceeding.

NEXT

3 PROBLEM SYMPTOMS TABLE

Result:

Result	Proceed to
Fault is not listed in problem symptoms table	A
Fault is listed in problem symptoms table	B

B → **Go to step 5**

A

4 OVERALL ANALYSIS AND TROUBLESHOOTING

(a) Terminals of ECU (see page DL-12)
(b) On-vehicle Inspection (see page DL-17)

NEXT

5 ADJUST, REPAIR OR REPLACE

NEXT

6 CONFIRMATION TEST

NEXT

END

CUSTOMIZE PARAMETERS

1. CUSTOMIZING FUNCTION WITH INTELLIGENT TESTER (REFERENCE)

HINT:

The following item can be customized.

NOTICE:

- **When the customer requests a change in a function, first make sure that the function can be customized.**
- **Make a note of the current settings before customizing.**
- **When troubleshooting a function, first make sure that the function is set to the default setting.**

Power door lock control system:

Display (Item)	Default	Function	Setting
UNLK/KEY TWICE	ON	Unlocks only driver side door when driver side door key cylinder turned to unlock once, and unlocks all doors when turned to unlock twice. For OFF setting, turning it once unlocks all doors	ON/OFF

PROBLEM SYMPTOMS TABLE

HINT:
Use the table below to help determine the causes of the problem symptom. The potential cases of the symptoms are listed in order of probability in the "Suspected Area" column of the table. Check each symptom by checking the suspected areas in the order they are listed. Replace parts as necessary.

Power door lock control system

Symptom	Suspected area	See page
All Doors LOCK / UNLOCK Functions do not Operate Via Master Switch, Driver	Door control switch (for front driver door side)	DL-19
	Front door lock assembly LH	DL-19
	Wire harness	DL-19
	Main body ECU	DL-19
Only driver door lock/unlock functions do not operate	Front door lock assembly LH	DL-30
	Wire harness	DL-30
	Main body ECU	DL-30
Only passenger door lock/unlock functions do not operate	Front door lock assembly RH	DL-32
	Wire harness	DL-32
	Main body ECU	DL-32
Only rear door LH lock/unlock functions do not operate	Rear door lock assembly LH	DL-34
	Wire harness	DL-34
	Main body ECU	DL-34
Only rear door RH lock/unlock functions do not operate	Rear door lock assembly RH	DL-36
	Wire harness	DL-36
	Main body ECU	DL-36
Only back door lock/unlock functions do not operate (Hatchback)	Back door lock assembly RH	DL-38
	Wire harness	DL-38
	Main body ECU	DL-38
Key lock-in prevention function does not work properly (manual operation and key-linked lock available)	Front door courtesy switch assembly LH	DL-40
	Unlock warning switch assembly	DL-40
	Wire harness	DL-40
	Main body ECU	DL-40

TERMINALS OF ECU

1. CHECK MAIN BODY ECU

Main Body ECU (Rear View):

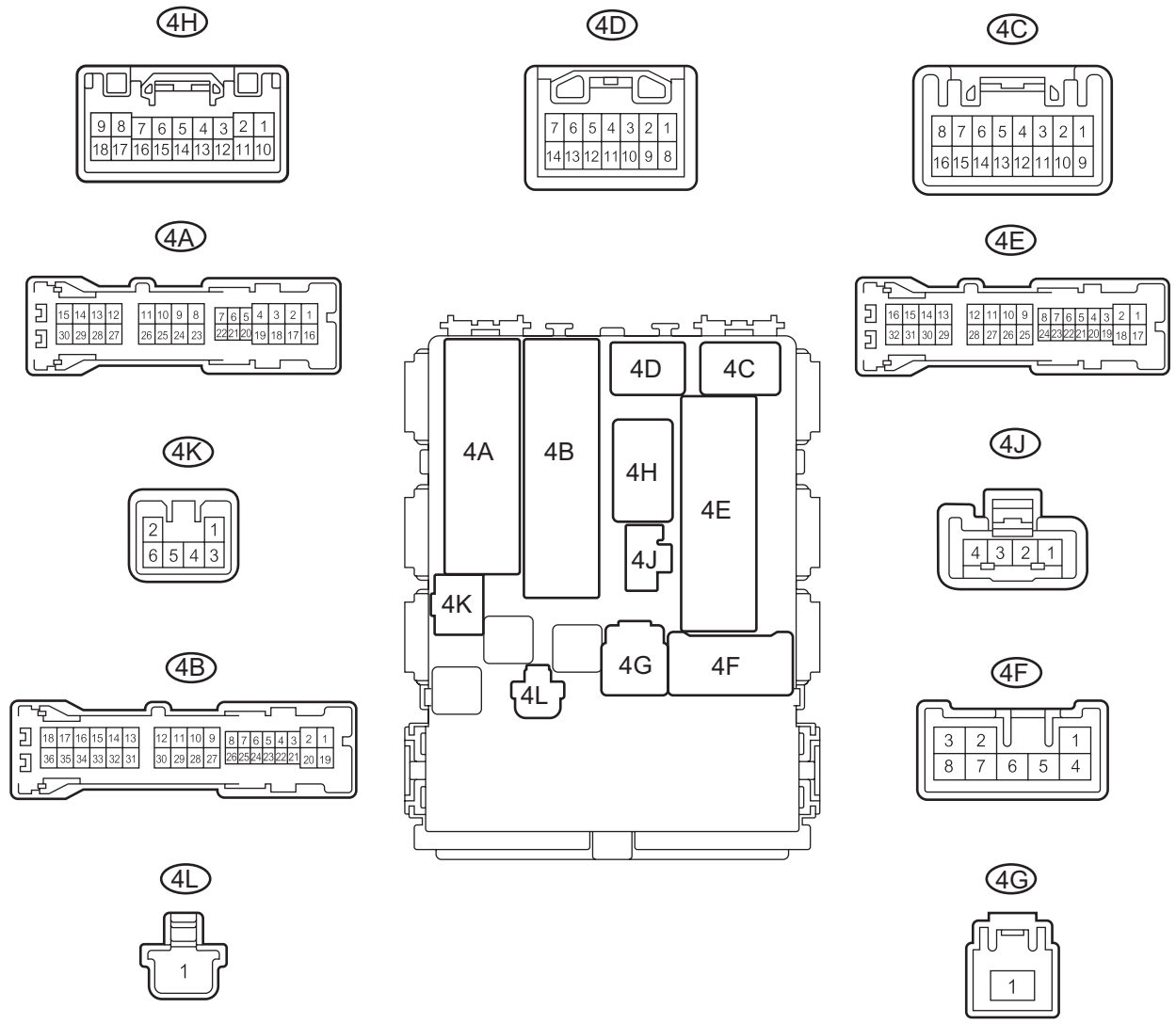

H

E114510E06

DL

Main Body ECU (Front View):

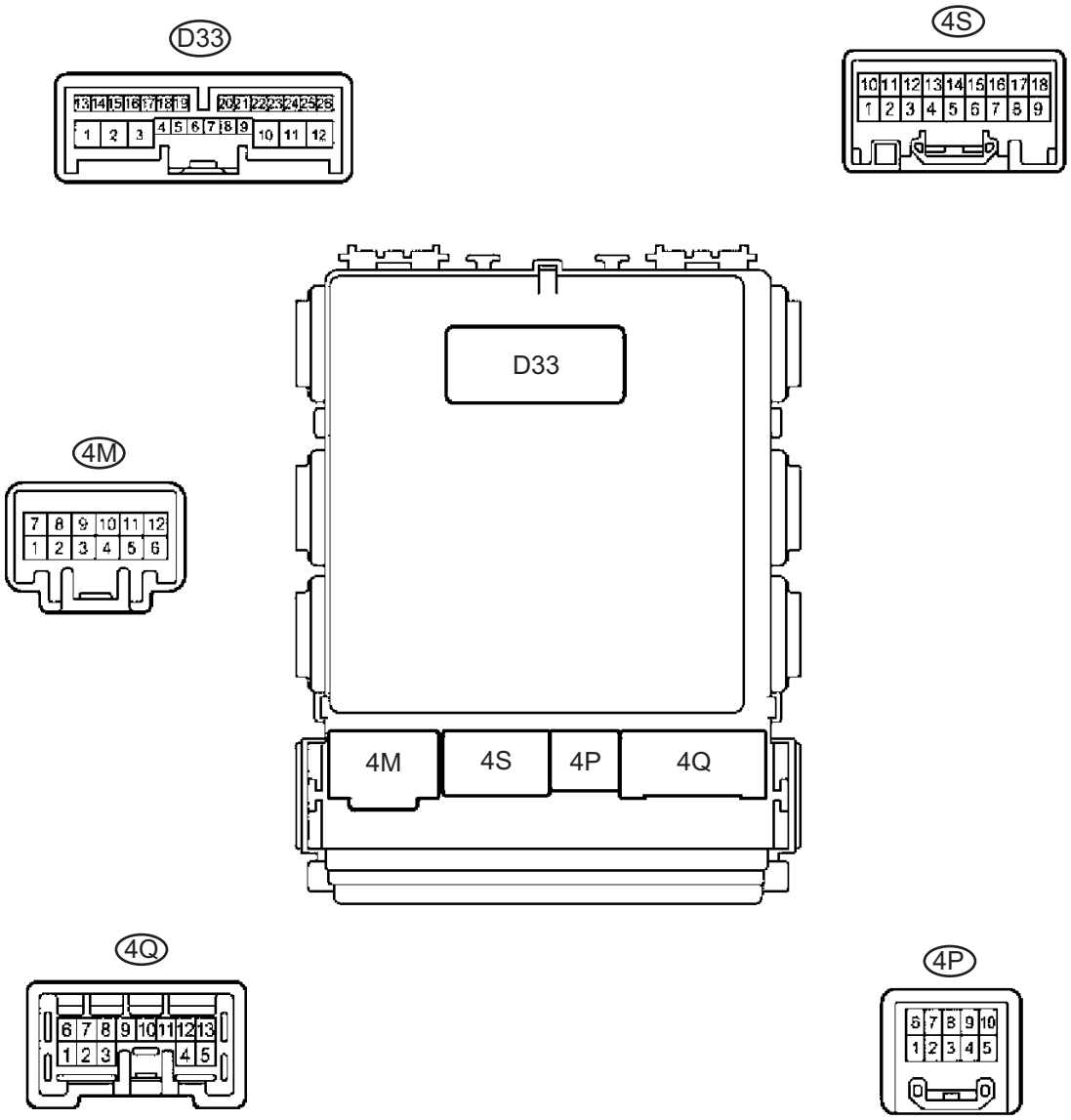

B108641E08

(a) Disconnect the 4B and 4E main body ECU (vehicle rear side) connectors.
(b) Measure the voltage and resistance of the wire harness side connectors.

Standard:

Symbols (Terminal No.)	Wiring Color	Terminal Description	Condition	Specified Condition
BECU (4B-30) - GND1 (4E-17)	L - W-B	Battery (power supply)	Always	11 to 14 V
GND1 (4E-17) - Body ground	W-B - Body ground	Ground	Always	Below 1 Ω

If the result is not as specified, there may be a malfunction in the wire harness.
(c) Reconnect the main body ECU (vehicle rear side) connectors.

(d) Measure the voltage of the wire harness side connectors.

Standard voltage:

Symbols (Terminal No.)	Wiring Color	Terminal Description	Condition	Specified Condition
KSW (4D-7) - GND1 (4E-17)	Y - W-B	Key unlock warning switch input	Key inserted	0 V
KSW (4D-7) - GND1 (4E-17)	Y - W-B	Key unlock warning switch input	No key in ignition key cylinder	11 to 14 V
DCTY (4A-21) - Body ground	R - Body ground	Driver side door courtesy switch input	Driver side door closed	11 to 14 V
DCTY (4A-21) - Body ground	R - Body ground	Driver side door courtesy switch input	Driver side door open	0 V
PCTY (4A-24) - Body ground	L - Body ground	Passenger side door courtesy switch input	Passenger side door closed	11 to 14 V
PCTY (4A-24) - Body ground	L - Body ground	Passenger side door courtesy switch input	Passenger side door open	0 V
RRCY (4A-20) - Body ground*3	L - Body ground	Rear RH door courtesy switch input	Rear RH door closed	11 to 14 V
RRCY (4A-20) - Body ground*3	L - Body ground	Rear RH door courtesy switch input	Rear RH door open	0 V
RRCY (4A-5) - Body ground*3	G - Body ground	Rear LH door courtesy switch input	Rear LH door closed	11 to 14 V
RRCY (4A-5) - Body ground*3	G - Body ground	Rear LH door courtesy switch input	Rear LH door open	0 V
RRCY (4A-5) - Body ground*4	Y - Body ground	Rear LH and RH door courtesy switch input	Rear LH and RH door closed	11 to 14 V
RRCY (4A-5) - Body ground*4	Y - Body ground	Rear LH and RH door courtesy switch input	Rear LH and RH door open	0 V
BCTY (4A-7) - Body ground*1	SB- Body ground	Back door courtesy switch input	Back side door closed	11 to 14 V
BCTY (4A-7) - Body ground*1	SB- Body ground	Back door courtesy switch input	Back side door open	0 V
LGCY (4A-7) - Body ground*2	SB- Body ground	Luggage room courtesy switch input	Luggage room closed	11 to 14 V
LGCY (4A-7) - Body ground*2	SB- Body ground	Luggage room courtesy switch input	Luggage room open	0 V
L1 (4H-4) - Body ground	LG - Body ground	Door control switch lock input	Door control switch OFF	11 to 14 V
L1 (4H-4) - Body ground	LG - Body ground	Door control switch lock input	Door control switch ON (LOCK)	0 V
UL1 (4H-5) - Body ground	O - Body ground	Door control switch unlock input	Door control switch OFF	11 to 14 V
UL1 (4H-5) - Body ground	O - Body ground	Door control switch unlock input	Door control switch ON (UNLOCK)	0 V
ACTD (D33-2) - Body ground	SB - Body ground	Door lock motor UNLOCK drive output	Door control switch or driver side door key cylinder OFF	0 V
ACTD (D33-2) - Body ground	SB - Body ground	Door lock motor UNLOCK drive output	Door control switch or driver side door key cylinder ON (UNLOCK)	11 to 14 V → 0 V
ACT+ (4H-8) - Body ground	O - Body ground	Door lock motor LOCK drive output	Door control switch or driver side door key cylinder OFF	0 V
ACT+ (4H-8) - Body ground	O - Body ground	Door lock motor LOCK drive output	Door control switch or driver side door key cylinder ON (LOCK)	11 to 14 V → 0 V
ACT+ (4A-3) - Body ground	GR - Body ground	Door lock motor LOCK drive output	Door control switch or driver side door key cylinder OFF	0 V

Symbols (Terminal No.)	Wiring Color	Terminal Description	Condition	Specified Condition
ACT+ (4A-3) - Body ground	GR - Body ground	Door lock motor LOCK drive output	Door control switch or driver side door key cylinder ON (LOCK)	11 to 14 V → 0 V
ACT+ (4H-17) - Body ground	W - Body ground	Door lock motor LOCK drive output	Door control switch or driver side door key cylinder OFF	0 V
ACT+ (4H-17) - Body ground	W - Body ground	Door lock motor LOCK drive output	Door control switch or driver side door key cylinder ON (LOCK)	11 to 14 V → 0 V
ACT- (4H-18) - Body ground	P - Body ground	Door lock motor UNLOCK drive output	Door control switch or driver side door key cylinder OFF	0 V
ACT- (4H-18) - Body ground	P - Body ground	Door lock motor UNLOCK drive output	Door control switch or driver side door key cylinder ON (UNLOCK)	11 to 14 V → 0 V
ACT- (4A-4) - Body ground	P - Body ground	Door lock motor UNLOCK drive output	Door control switch or driver side door key cylinder OFF	0 V
ACT- (4A-4) - Body ground	P - Body ground	Door lock motor UNLOCK drive output	Door control switch or driver side door key cylinder ON (UNLOCK)	11 to 14 V → 0 V
LSWD (D33-21) - Body ground	L - Body ground	Driver side door lock position switch input	Driver side door UNLOCK	0 V
LSWD (D33-21) - Body ground	L - Body ground	Driver side door lock position switch input	Driver side door LOCK	11 to 14 V
LSWP (D33-5) - Body ground	L - Body ground	Passenger side door lock position switch input	Passenger side door UNLOCK	0 V
LSWP (D33-5) - Body ground	L - Body ground	Passenger side door lock position switch input	Passenger side door LOCK	11 to 14 V
LSR (D33-24) - Body ground	O - Body ground	Rear LH or rear RH door lock position switch input	Rear LH or rear RH door UNLOCK	0 V
LSR (D33-24) - Body ground	O - Body ground	Rear LH or rear RH door lock position switch input	Rear LH or rear RH door LOCK	11 to 14 V
UL3 (D33-14) - Body ground	Y - Body ground	Door lock motor UNLOCK drive output	Driver side door key cylinder OFF	11 to 14 V
UL3 (D33-14) - Body ground	Y - Body ground	Door lock motor UNLOCK drive output	Driver side door key cylinder ON (UNLOCK)	0 V
UL2 (4H-15) - Body ground	G - Body ground	Door lock motor UNLOCK drive output	Passenger side door key cylinder OFF	11 to 14 V
UL2 (4H-15) - Body ground	G - Body ground	Door lock motor UNLOCK drive output	Passenger side door key cylinder ON (UNLOCK)	0 V
L2 (4H-16) - Body ground	O - Body ground	Door lock motor LOCK drive output	Door control switch or driver side door key cylinder OFF	0 V
L2 (4H-16) - Body ground	O - Body ground	Door lock motor LOCK drive output	Door control switch or driver side door key cylinder ON (LOCK)	11 to 14 V

*1: Hatchback
*2: Sedan
*3: Hatchback, Sedan except *5
*4: Sedan *5
*5: Cold area specification, w/ Engine immobilizer system, w/ ABS, w/ Rear window defogger, w/ Power door lock system, w/ Daytime running light, w/ Remote control mirror, w/ Air conditioning
If the result is not as specified, there may be a malfunction in the wire harness.

DATA LIST / ACTIVE TEST

1. READ DATA LIST

HINT:
Using the intelligent tester's DATA LIST allows switch, sensor, actuator and other item values to be read without removing any parts. Reading the DATA LIST early in troubleshooting is one way to save time.

(a) Connect the intelligent tester to the DLC3.
(b) Turn the ignition switch ON.
(c) Read the DATA LIST in accordance with the display on the tester.

Main body ECU:

Item	Measurement Item/Display (Range)	Normal Condition	Diagnostic Note
D DOR CTY SW	Driver side door courtesy switch signal/ ON or OFF	ON: Driver side door is open OFF: Driver side door is closed	-
D LOCK POS SW	Driver side door lock position switch signal/ ON or OFF	ON: Driver side door is unlocked OFF: Driver side door is locked	-
D/L SW-LOCK	Door manual lock switch signal/ ON or OFF	ON: Door control switch (for front driver door side) is turned to lock position OFF: Door control switch (for front driver door side) is turned to unlock position	-
D/L SW-UNLOCK	Door manual unlock switch signal/ ON or OFF	ON: Door control switch (for front driver door side) is turned to unlock position OFF: Door control switch (for front driver door side) is turned to lock position	-
DOR KEY SW-LOCK	Door key linked lock switch signal/ ON or OFF	ON: Driver side door key cylinder is turned to lock position OFF: Driver side door key cylinder is turned to unlock position	-
DOR KEY SW-UNLOCK	Door key linked unlock switch signal/ ON or OFF	ON: Driver side door key cylinder is turned to unlock position OFF: Driver side door key cylinder is turned to lock position	-
D DOR KEY SW-UL	Driver side door key linked unlock switch signal/ ON or OFF	ON: Driver side door key cylinder is turned to unlock position OFF: Driver side door key cylinder is turned to lock position	-
P DOR CTY SW	Passenger side door courtesy switch signal/ ON or OFF	ON: Passenger side door is open OFF: Passenger side door is closed	-
P LOCK POS SW	Passenger side door lock position switch signal/ ON or OFF	ON: Passenger side door is unlocked OFF: Passenger side door is locked	-
RR DOR CTY SW	Rear door RH courtesy switch signal/ ON or OFF	ON: Rear door RH is open OFF: Rear door RH is closed	-
RL DOR CTY SW	Rear door LH courtesy switch signal/ ON or OFF	ON: Rear door LHis open OFF: Rear door LH is closed	-
BACK DOR CTY SW	Back door courtesy switch signal/ ON or OFF	ON: Back door is open OFF: Back door is closed	-
BACK LOCK POS SW	Back door lock position switch signal/ ON or OFF	ON: Back door is unlocked OFF: Back door is locked	-

Item	Measurement Item/Display (Range)	Normal Condition	Diagnostic Note
KEY UNLK WRN SW	Unlock warning switch signal/ ON or OFF	ON: Key is in ignition key cylinder OFF: No key is in ignition key cylinder	-

2. PERFORM ACTIVE TEST

HINT:
Performing the intelligent tester's ACTIVE TEST allows relays, VSV, actuators and other items to be operated without removing any parts. Performing the ACTIVE TEST early in troubleshooting is one way to save time. The DATA LIST can be displayed during the ACTIVE TEST.

(a) Connect the intelligent tester to the DLC3.
(b) Turn the ignition switch ON.
(c) Perform the ACTIVE TEST in accordance with the display on the tester.

Main body ECU:

Item	Test Details	Diagnostic Note
DOOR LOCK	Operate door lock motor LOCK/UNLOCK	-
D DOOR UNLOCK	Operate driver door lock motor unlock side ON/OFF	-

ON-VEHICLE INSPECTION

1. CHECK DOOR LOCK FAIL-SAFE

(a) When a malfunction in the door control switch or driver side door key cylinder is detected, the door lock/unlock operation is disabled.

2. CHECK ELECTRICAL DOOR LOCK OPERATION

(a) Check that all doors are locked and unlocked in accordance with the door control switch operation.

(b) Check that only the driver side door unlocks when the driver side door lock key cylinder is turned to UNLOCK and all doors unlock when turned to UNLOCK once again within 3 seconds using the key (2-step unlocking function).
HINT:
Doors cannot be locked or unlocked using the key when the ignition switch is on and the driver seat belt is fastened.

(c) Check the key lock-in prevention function.
NOTICE:
Perform this operation with the driver door window open to prevent the key from being locked inside the vehicle.

(1) Insert the ignition key into the ignition key cylinder.

(2) Check that all doors are immediately unlocked when the driver side door lock knob is turned to the lock position with the driver door open.

(3) Check that all doors are immediately unlocked when the door control switch is turned to the lock position with the driver door open.

(4) Check that all doors are unlocked when the driver door is closed after the driver door lock knob is held in the lock position for 2 seconds with the driver door open.

(d) Check the key-linked lock and unlock function.

(1) Check that doors cannot be locked or unlocked using the key from outside the vehicle when the ignition switch is on and the driver seat belt is fastened.

All Doors cannot be Locked / Unlocked Simultaneously

DESCRIPTION

The main body ECU receives switch signals from the door control switch and driver side door key cylinder, and activates the door lock motor on each door accordingly.

WIRING DIAGRAM

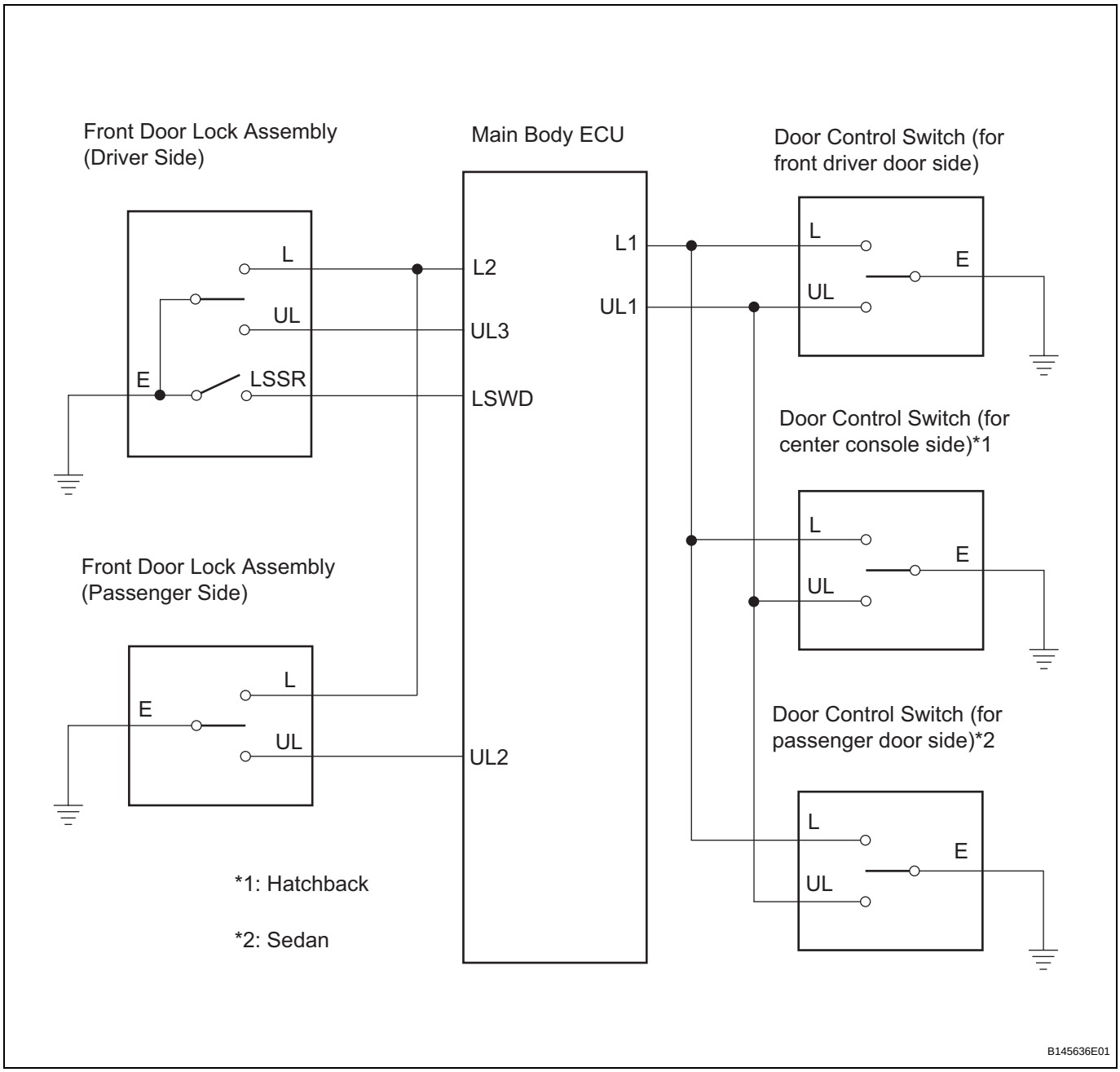

INSPECTION PROCEDURE

1 INSPECT FRONT DOOR LOCK ASSEMBLY LH

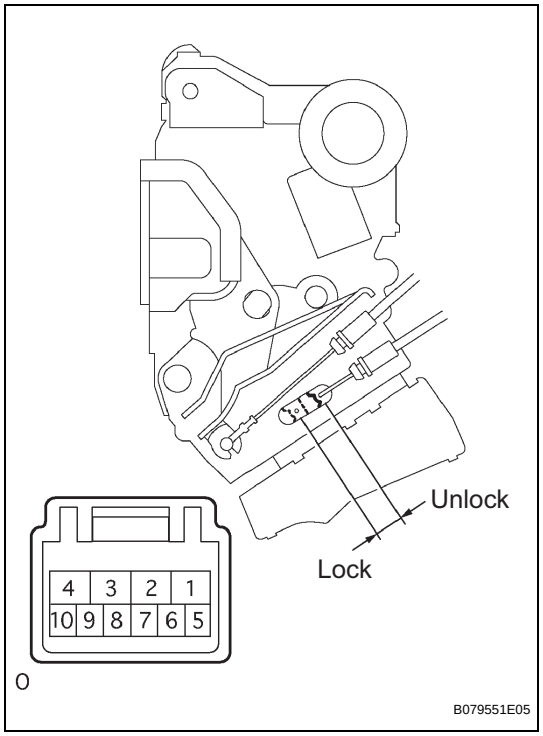

(a) Apply the battery voltage to the door lock motor and measure the resistance.

Standard resistance

Tester Connection	Condition	Specified Condition
8 (LSSR) - 7 (E)	Battery positive (+) → Terminal 1 Battery negative(-) → Terminal 4	Below 1 Ω
8 (LSSR) - 7 (E)	Battery positive (+) → Terminal 4 Battery negative(-) → Terminal 1	10 kΩ or higher

NG → **REPLACE FRONT DOOR LOCK ASSEMBLY LH**

OK

2 CHECK HARNESS AND CONNECTOR (MAIN BODY ECU - FRONT DOOR LOCK ASSEMBLY LH)

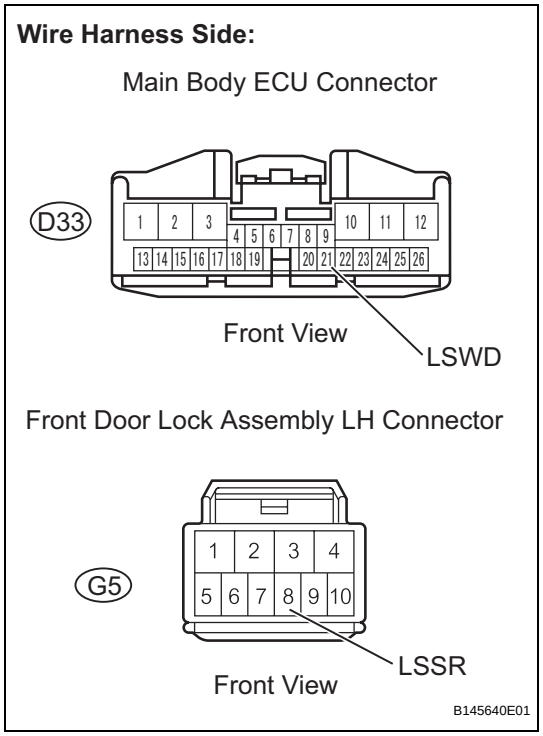

(a) Disconnect the D33main body ECU connector.
(b) Disconnect the G5 door lock connector.
(c) Measure the resistance.

Standard resistance

Tester Connection	Specified Condition
D33-21 (LSWD) - G5-8 (LSSR)	Below 1 Ω
D33-21 (LSWD) or G5-8 (LSSR) - Body ground	10 kΩ or higher

(d) Reconnect the main body ECU connector.
(e) Reconnect the door lock connector.

NG → **REPAIR OR REPLACE HARNESS OR CONNECTOR**

DL

OK

3 CHECK DOOR LOCK OPERATION

(a) Proceed to the next step according to the symptom listed in the table below.

Result

Symptom	Proceed to
Doors cannot be locked using door control switch (for front driver door side)	A
Doors cannot be locked using driver side door key cylinder	B
Hatchback only: Doors cannot be locked using door control switch (for center console side)	C
Doors cannot be locked using front passenger side door key cylinder	D
Sedan only: Doors cannot be locked using door control switch (for passenger side)	E

B → Go to step 6

C → Go to step 8

D → Go to step 10

E → Go to step 12

A

4 INSPECT DOOR CONTROL SWITCH (for Front Driver Door Side)

Component Side:

Door Control Switch (for front driver door side)

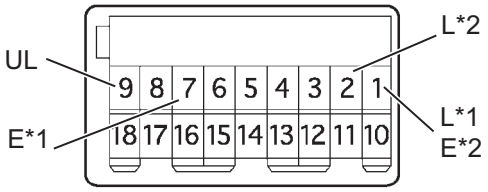

*1: 3 door

*2: 5 door

B108644E01

(a) 3 Door, 5 Door, Sedan w/ Power window:
(1) Disconnect the G1 door control switch (for front driver door side) connector.
(2) Measure the resistance of the switch.

Standard resistance (3 Door)

Tester Connection	Switch Condition	Specified Condition
1 (L) - 7 (E)	Lock	Below 1 Ω
9 (UL) - 7 (E)	Unlock	Below 1 Ω
1 (L) - 7 (E)	OFF	10 kΩ or higher
9 (UL) - 7 (E)	OFF	10 kΩ or higher

Standard resistance (5 Door, Sedan w/ Power window)

Tester Connection	Switch Condition	Specified Condition
2 (L) - 1 (E)	Lock	Below 1 Ω
9 (UL) - 1 (E)	Unlock	Below 1 Ω
2 (L) - 1 (E)	OFF	10 kΩ or higher
9 (UL) - 1 (E)	OFF	10 kΩ or higher

(3) Reconnect the door control switch (for front driver door side) connector.

Component Side:

Door Control Switch (for front driver door side)

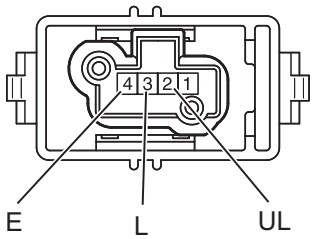

B145638E01

(b) Sedan w/o Power window:
(1) Disconnect the G7 door control switch (for front driver door side) connector.
(2) Measure the resistance of the switch.
Standard resistance

Tester Connection	Switch Condition	Specified Condition
3 (L) - 4 (E)	Lock	Below 1 Ω
2 (UL) - 4 (E)	Unlock	Below 1 Ω
3 (L) - 4 (E)	OFF	10 kΩ or higher
2 (UL) - 4 (E)	OFF	10 kΩ or higher

(3) Reconnect the door control switch (for front driver door side) connector.

NG → **REPLACE DOOR CONTROL SWITCH (for Front Driver Door Side)**

OK

DL

5 CHECK HARNESS AND CONNECTOR (MAIN BODY ECU - DOOR CONTROL SWITCH (Front Driver Door Side))

Wire Harness Side:

Main Body ECU Connector

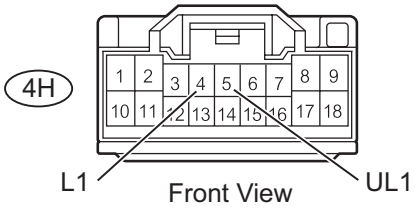

Door Control Switch (for front driver door side) Connector

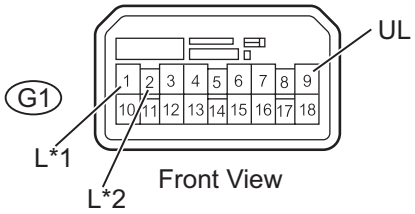

*1: 3 door

*2: 5 door

B123822E01

(a) 3 Door, 5 Door, Sedan w/ Power window:
(1) Disconnect the 4H main body ECU connector.
(2) Disconnect the G1 door control switch (for front driver door side) connector.
(3) Measure the resistance.
Standard resistance (3 Door)

Tester Connection	Specified Condition
4H-5 (UL1) - G1-9 (UL)	Below 1 Ω
4H-4 (L1) - G1-1 (L)	Below 1 Ω
4H-5 (UL1) or G1-9 (UL) - Body ground	10 kΩ or higher
4H-4 (L1) or G1-1 (L) - Body ground	10 kΩ or higher

Standard resistance (5 Door, Sedan w/ Power window)

Tester Connection	Specified Condition
4H-5(UL1) - G1-9(UL)	Below 1 Ω
4H-4(L1) - G1-2(L)	Below 1 Ω
4H-5(UL1) or G1-9(UL) - Body ground	10 kΩ or higher
4H-4(L1) or G1-2(L) - Body ground	10 kΩ or higher

(4) Reconnect the main body ECU connector.
(5) Reconnect the door control switch (for front driver door side) connector.

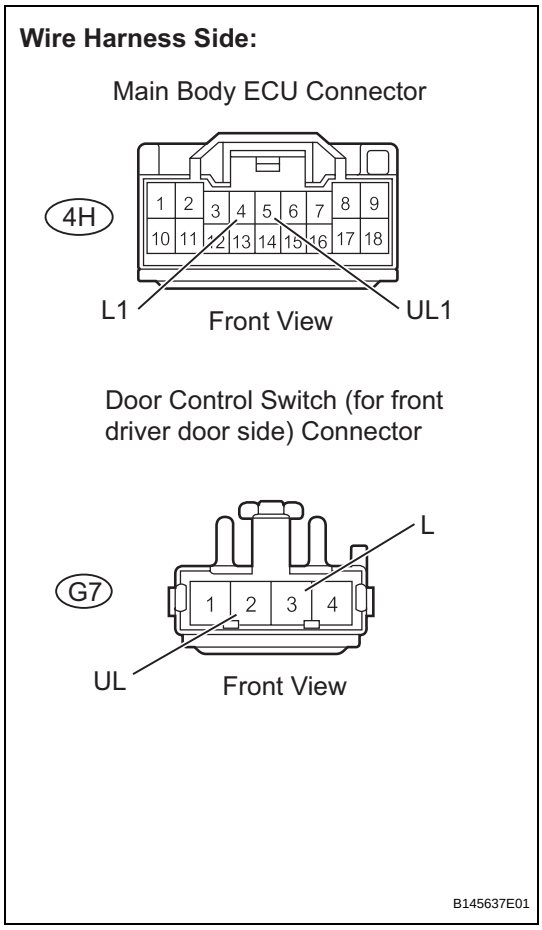

(b) Sedan w/o Power window:
(1) Disconnect the 4H main body ECU connector.
(2) Disconnect the G7 door control switch (for front driver door side) connector.
(3) Measure the resistance.
Standard resistance

Tester Connection	Specified Condition
4H-5 (UL1) - G7-2 (UL)	Below 1 Ω
4H-4 (L1) - G7-3 (L)	Below 1 Ω
4H-5 (UL1) or G7-2 (UL) - Body ground	10 kΩ or higher
4H-4 (L1) or G7-3 (L) - Body ground	10 kΩ or higher

(4) Reconnect the main body ECU connector.
(5) Reconnect the door control switch (for front driver door side) connector.

NG → **REPAIR OR REPLACE HARNESS OR CONNECTOR**

OK

REPLACE MAIN BODY ECU

6 READ VALUE OF INTELLIGENT TESTER (DOR KEY SW-LOCK)

(a) Check the DATA LIST to ensure the proper operation of the door lock and unlock switch.

Main Body ECU

Item	Measurement Item/Display (Range)	Normal Condition	Diagnostic Note
Dor Key SW-Lock	Door key-linked lock switch signal/ ON or OFF	ON: Door key cylinder is turned to lock position OFF: Driver side door key cylinder is turned to unlock position	-

Main Body ECU

Item	Measurement Item/Display (Range)	Normal Condition	Diagnostic Note
Dor Key SW-ULock	Door key-linked lock switch signal/ ON or OFF	ON: Door key cylinder is turned to lock position OFF: Driver side door key cylinder is turned to unlock position	-

OK:
ON (driver side door key cylinder is turned to lock/ unlock position) appears on tester screen.

OK → **REPLACE MAIN BODY ECU**

NG

7 CHECK HARNESS AND CONNECTOR (DRIVER SIDE DOOR LOCK ASSEMBLY - MAIN BODY ECU)

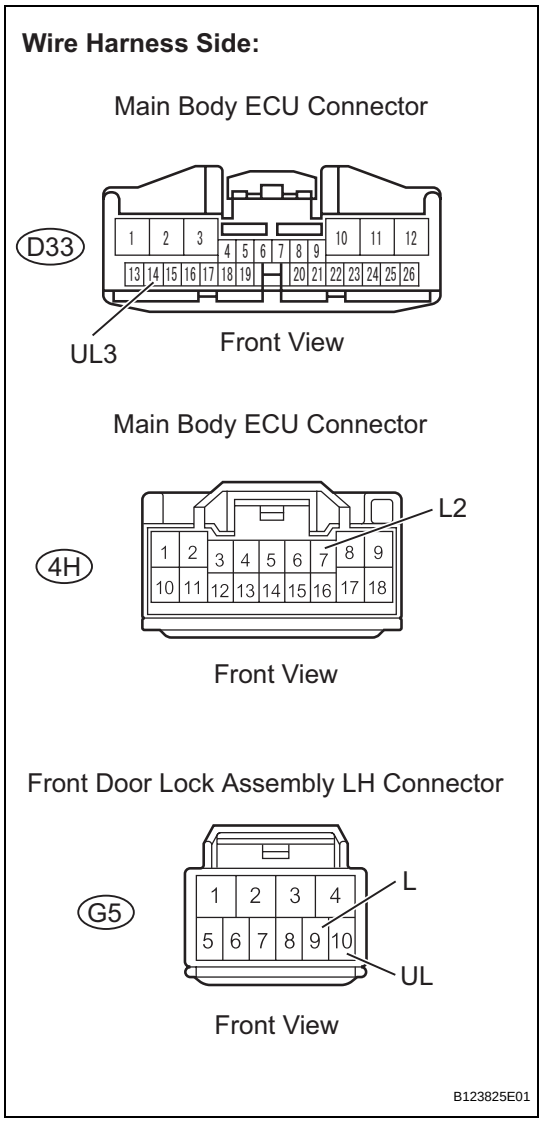

(a) Disconnect the D33 and 4H main body ECU connectors.
(b) Disconnect the G5 door lock connector.
(c) Measure the resistance.
Standard resistance

Tester Connection	Specified Condition
D33-14 (UL3) - G5-10 (UL)	Below 1 Ω
4H-7 (L2) - G5-9 (L)	Below 1 Ω
D33-14 (UL3) or G5-10 (UL) - Body ground	10 kΩ or higher
4H-7 (L2) or G5-9 (L) - Body ground	10 kΩ or higher

(d) Reconnect the main body ECU connectors.
(e) Reconnect the door lock connector.

NG → **REPAIR OR REPLACE HARNESS OR CONNECTOR**

OK

REPLACE MAIN BODY ECU

DL

8	**INSPECT DOOR CONTROL SWITCH (for Center Console Side)**

Component Side:

Door Control Switch (for center console side)

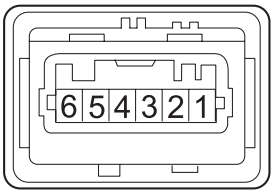

B145639E02

(a) Disconnect the D30 door control switch (for center console side) connector.

(b) Measure the resistance.

Standard resistance

Tester Connection	Condition	Specified Condition
5 - 6	Lock	Below 1 Ω
4 - 6	Unlock	Below 1 Ω
5 - 6	OFF	Below 1 Ω
4 - 6	OFF	Below 1 Ω

(c) Reconnect the door control switch (for center console side) connector.

NG → **REPLACE DOOR CONTROL SWITCH (for Center Console Side)**

OK

9	**CHECK HARNESS AND CONNECTOR (MAIN BODY ECU - DOOR CONTROL SWITCH (Center Console Side))**

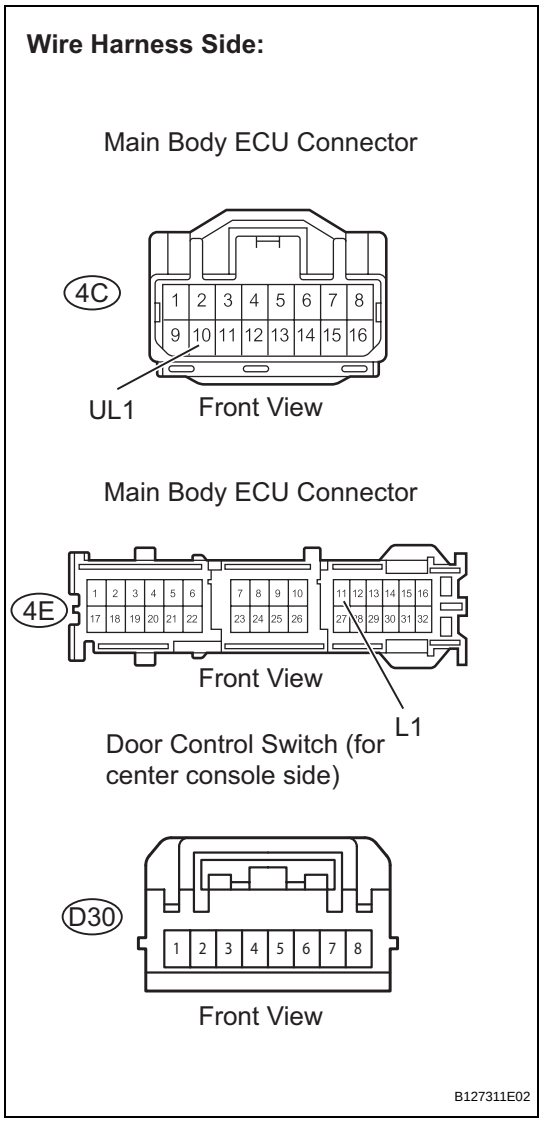

(a) Disconnect the 4C and 4E main body ECU connectors.
(b) Disconnect the D30 door control switch (for center console side) connector.
(c) Measure the resistance of the fuses.
Standard resistance

Tester Connection	Specified Condition
4C-10(UL1) - D30-4	Below 1 Ω
4E-11(L1) - D30-5	Below 1 Ω
4C-10(UL1) or D30-4 - Body ground	10 kΩ or higher
4E-11(L1) or D30-5 - Body ground	10 kΩ or higher

(d) Reconnect the main body ECU connector.
(e) Reconnect the door control switch (for center console side) connector.

NG → **REPAIR OR REPLACE HARNESS OR CONNECTOR**

OK

REPLACE MAIN BODY ECU

10	**READ VALUE OF INTELLIGENT TESTER (DOR KEY SW-LOCK, DOR KEY SW-ULCK)**

(a) Check the DATA LIST to ensure the proper operation of the door lock and unlock switch.

DL

Main Body ECU

Item	Measurement Item/Display (Range)	Normal Condition	Diagnostic Note
Dor Key SW-Lock	Door key-linked lock switch signal/ ON or OFF	ON: Door key cylinder is turned to lock position OFF: Driver side door key cylinder is turned to unlock position	-

Main Body ECU

Item	Measurement Item/Display (Range)	Normal Condition	Diagnostic Note
Dor Key SW-ULck	Door key-linked unlock switch signal/ ON or OFF	ON: Door key cylinder is turned to unlock position OFF: Door key cylinder is turned to lock position	-

OK:
ON (driver side door key cylinder is turned to lock/ unlock position) appears on screen.

DL

OK → **REPLACE MAIN BODY ECU**

NG

11 CHECK HARNESS AND CONNECTOR (PASSENGER SIDE DOOR LOCK ASSEMBLY - MAIN BODY ECU)

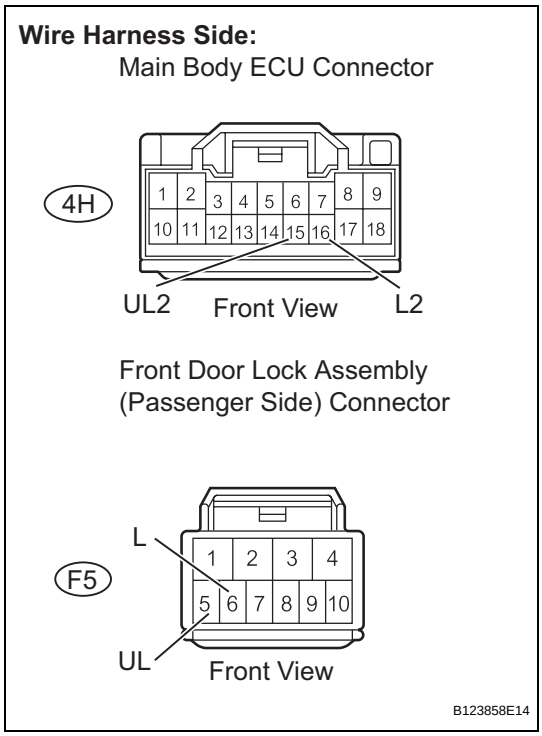

(a) Disconnect the 4H main body ECU connector.
(b) Disconnect the F5 front door lock assembly connector.
(c) Measure the resistance.
Standard resistance

Tester Connection	Specified Condition
4H-15(UL2) - F5-5(UL)	Below 1 Ω
4H-16(L2) - F5-6(L)	Below 1 Ω
4H-15(UL2) or F5-5(UL) - Body ground	10 kΩ or higher
4H-16(L2) or F5-6(L) - Body ground	10 kΩ or higher

(d) Reconnect the main body ECU connector.
(e) Reconnect the front door lock assembly connector.

NG → **REPAIR OR REPLACE HARNESS OR CONNECTOR**

OK

REPLACE MAIN BODY ECU

12 INSPECT DOOR CONTROL SWITCH (for Front Passenger Door Side)

Component Side:

Door Control Switch (for front passenger door side)

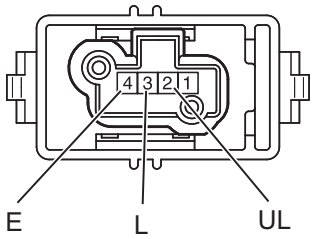

B145638E02

(a) Disconnect the F7 door control switch (for front passenger door side) connector.
(b) Measure the resistance of the switch.
Standard resistance

Tester Connection	Switch Condition	Specified Condition
3 (L) - 4 (E)	Lock	Below 1 Ω
2 (UL) - 4 (E)	Unlock	Below 1 Ω
3 (L) - 4 (E)	OFF	10 kΩ or higher
2 (UL) - 4 (E)	OFF	10 kΩ or higher

(c) Reconnect the door control switch (for front passenger door side) connector.

NG → **REPLACE DOOR CONTROL SWITCH (for Front Passenger Door Side)**

OK

13 CHECK HARNESS AND CONNECTOR (MAIN BODY ECU - DOOR CONTROL SWITCH (Passenger Door Side))

Wire Harness Side:

Main Body ECU Connector

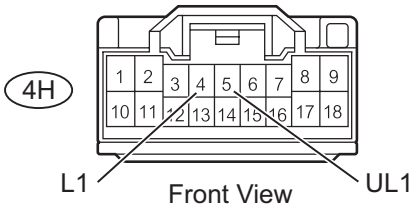

Door Control Switch (for front passenger door side) Connector

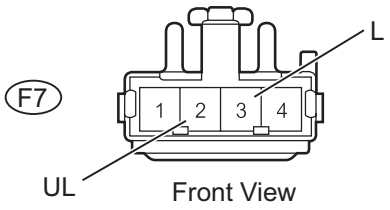

B145637E02

(a) Disconnect the 4H main body ECU connector.
(b) Disconnect the F7 door control switch (for front passenger door side) connector.
(c) Measure the resistance.
Standard resistance

Tester Connection	Specified Condition
4H-5 (UL1) - F7-2 (UL)	Below 1 Ω
4H-4 (L1) - F7-3 (L)	Below 1 Ω
4H-5 (UL1) or F7-2 (UL) - Body ground	10 kΩ or higher
4H-4 (L1) or F7-3 (L) - Body ground	10 kΩ or higher

(d) Reconnect the main body ECU connector.
(e) Reconnect the door control switch (for front passenger door side) connector.

NG → **REPAIR OR REPLACE HARNESS OR CONNECTOR**

OK

REPLACE MAIN BODY ECU

Only Driver Door LOCK / UNLOCK Functions do not Operate

DESCRIPTION

The main body ECU receives lock/unlock switch signals and activates the door lock motor accordingly.

WIRING DIAGRAM

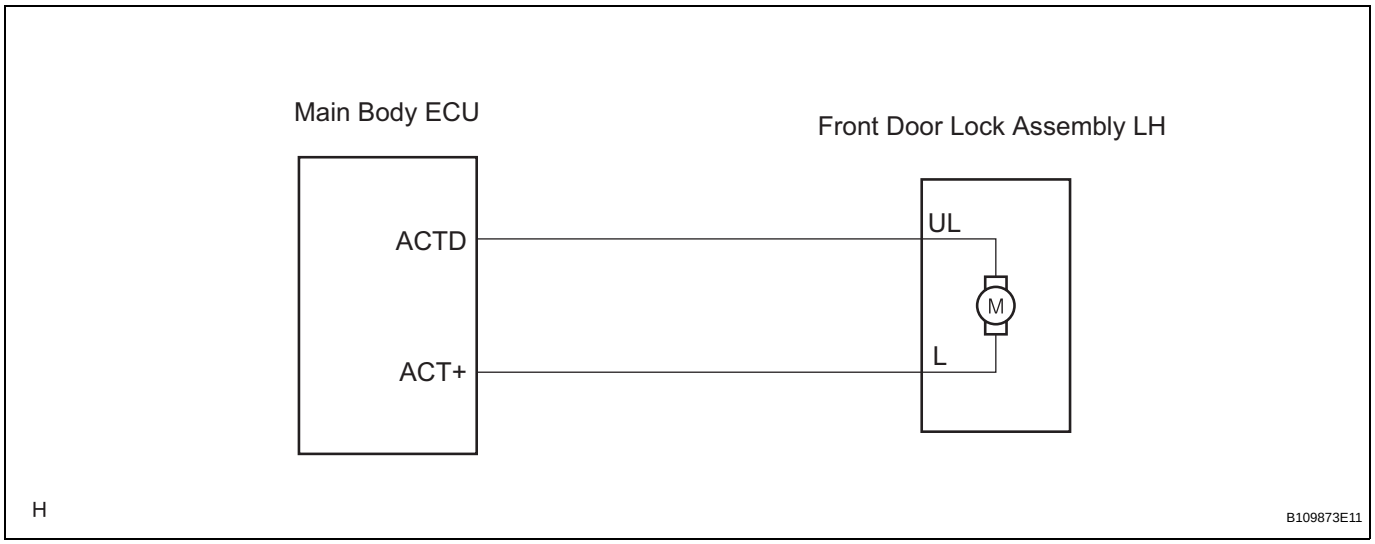

INSPECTION PROCEDURE

1	INSPECT FRONT DOOR LOCK ASSEMBLY LH

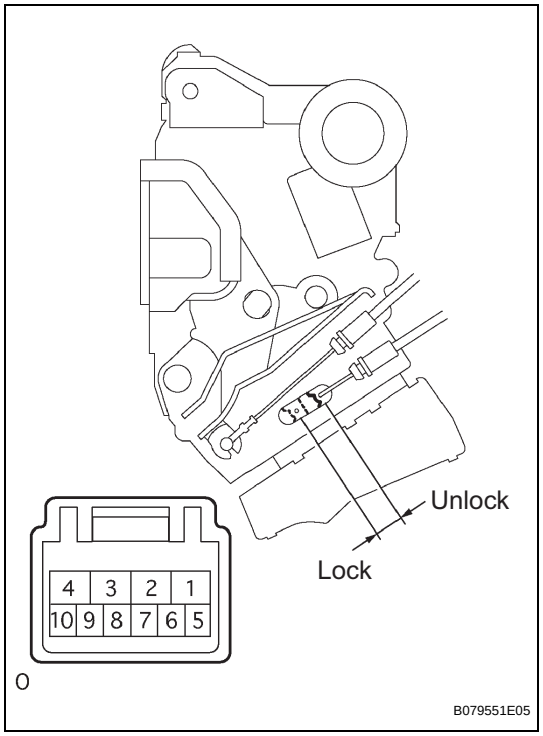

(a) Apply the battery voltage to the door lock motor and check the operation of the door lock motor.
OK

Measurement Condition	Specified Condition
Battery positive (+) → Terminal 4 Battery negative(-) → Terminal 1	Lock
Battery positive (+) → Terminal 1 Battery negative(-) → Terminal 4	Unlock

NG → **REPLACE FRONT DOOR LOCK ASSEMBLY LH**

OK

DL

2	**CHECK HARNESS AND CONNECTOR (MAIN BODY ECU - FRONT DOOR LOCK ASSEMBLY LH)**

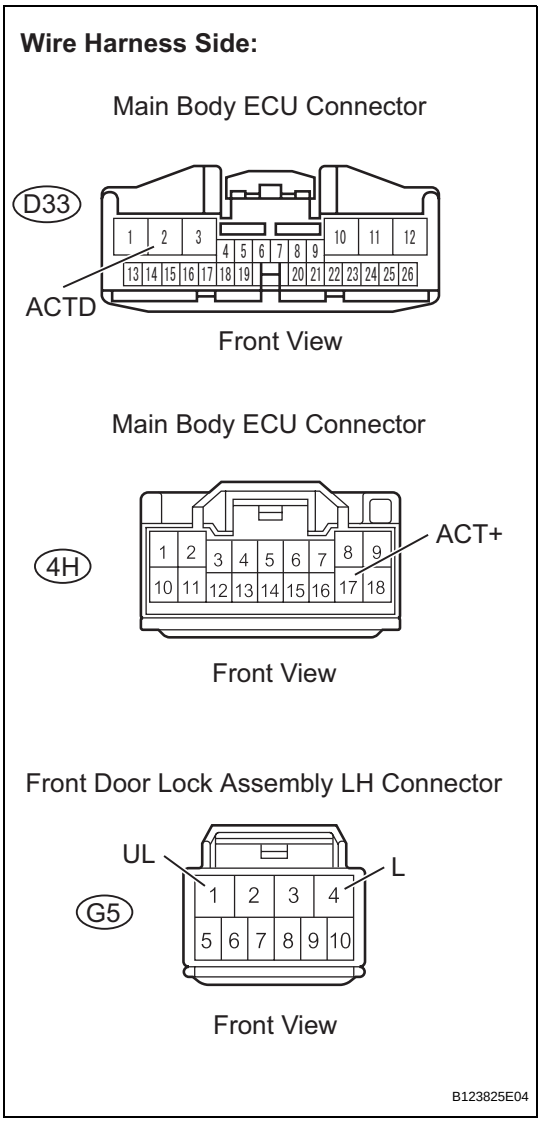

(a) Disconnect the D33 and 4H main body ECU connectors.
(b) Disconnect the G5 door lock connector.
(c) Measure the resistance.
Standard resistance

Tester Connection	Specified Condition
4H-17 (ACT+) - G5-4 (L)	Below 1 Ω
D33-2 (ACTD) - G5-1 (UL)	Below 1 Ω

(d) Reconnect the main body ECU connectors.
(e) Reconnect the door lock connector.

NG → **REPAIR OR REPLACE HARNESS OR CONNECTOR**

OK

REPLACE MAIN BODY ECU

Only Passenger Door LOCK / UNLOCK Functions do not Operate

DESCRIPTION

The main body ECU receives lock/unlock switch signals and activates the door lock motor accordingly.

WIRING DIAGRAM

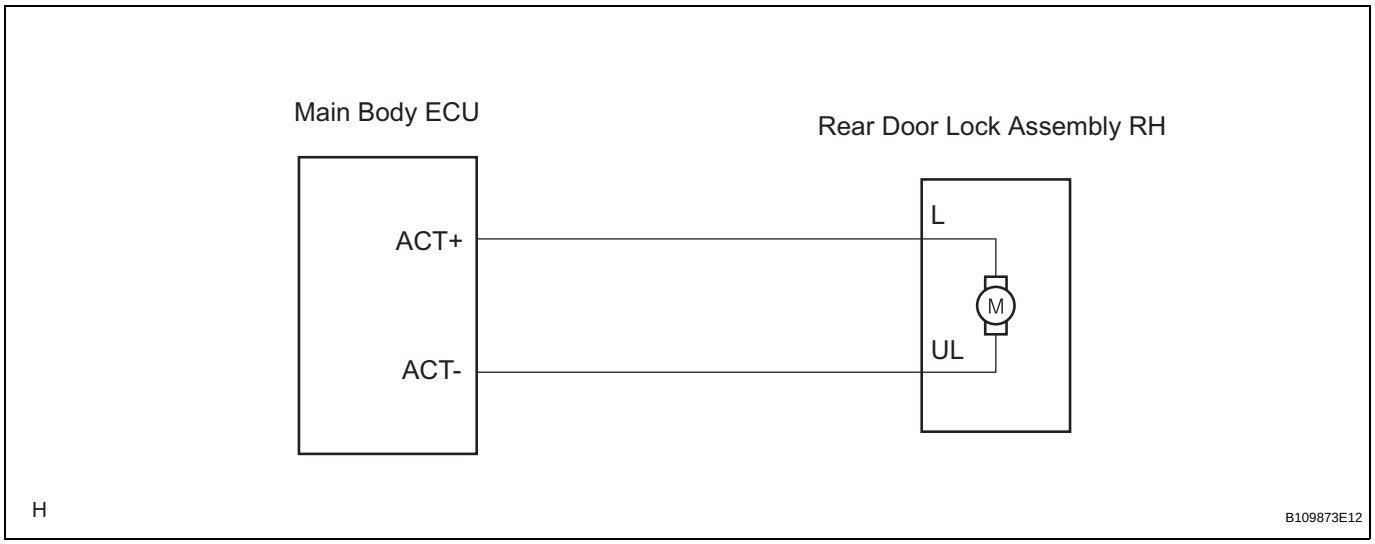

INSPECTION PROCEDURE

1	INSPECT FRONT DOOR LOCK ASSEMBLY RH

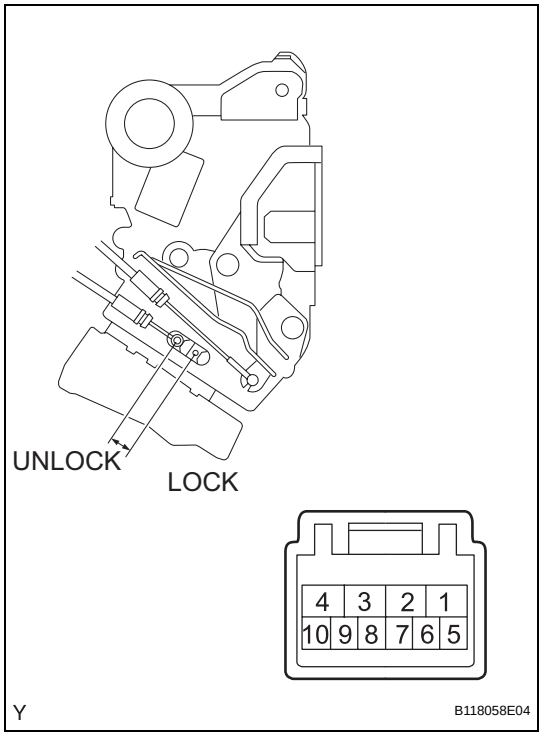

(a) Apply the battery voltage to the door lock motor and check the operation of the door lock motor.
OK

Measurement Condition	Specified Condition
Battery position (+) → Terminal 4 Battery negative (-) → Terminal 1	Lock
Battery position (+) → Terminal 1 Battery negative (-) → Terminal 4	Unlock

NG → **REPLACE FRONT DOOR LOCK ASSEMBLY RH**

OK

DL

2	**CHECK HARNESS AND CONNECTOR (MAIN BODY ECU - FRONT DOOR LOCK ASSEMBLY RH)**

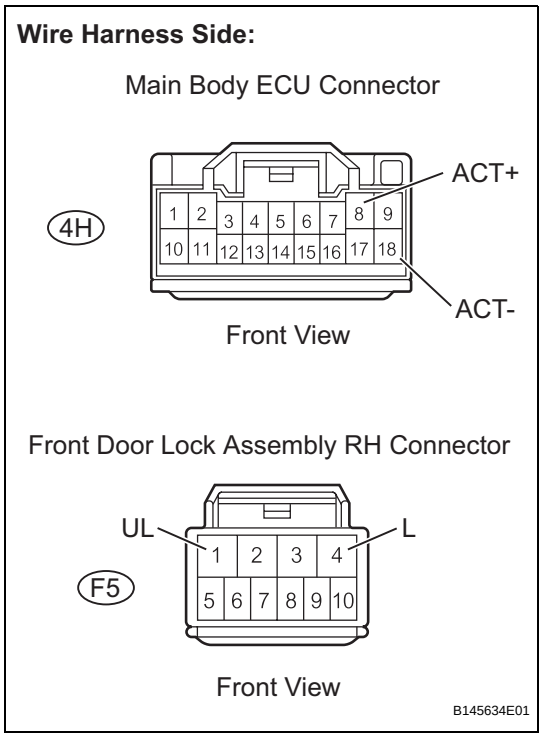

(a) Disconnect the 4H main body ECU connector.
(b) Disconnect the F5 door lock connector.
(c) Measure the resistance.
Standard resistance

Tester Connection	Specified Condition
4H-8 (ACT+) - F5-4 (L)	Below 1 Ω
4H-18 (ACT-) - F5-1 (UL)	Below 1 Ω

(d) Reconnect the main body ECU connectors.
(e) Reconnect the door lock connector.

NG → **REPAIR OR REPLACE HARNESS OR CONNECTOR**

OK

REPLACE MAIN BODY ECU

DL

Only Rear Door LH LOCK / UNLOCK Functions do not Operate

DESCRIPTION

The main body ECU receives lock/unlock switch signals and activates the door lock motor accordingly.

WIRING DIAGRAM

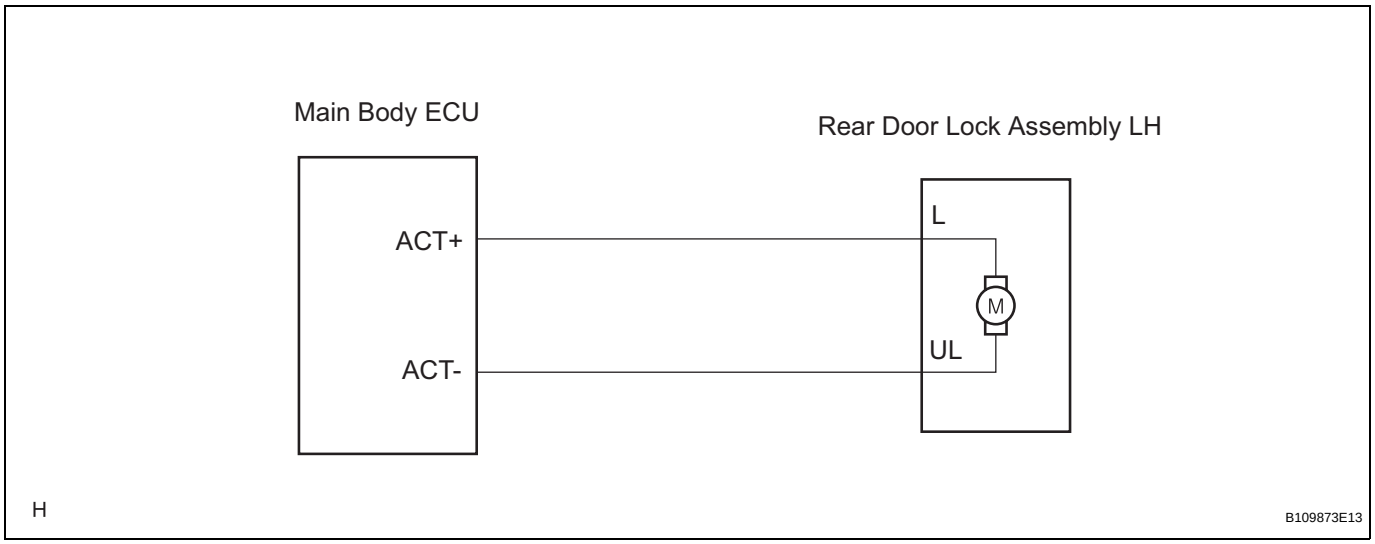

INSPECTION PROCEDURE

1	INSPECT REAR DOOR LOCK ASSEMBLY LH

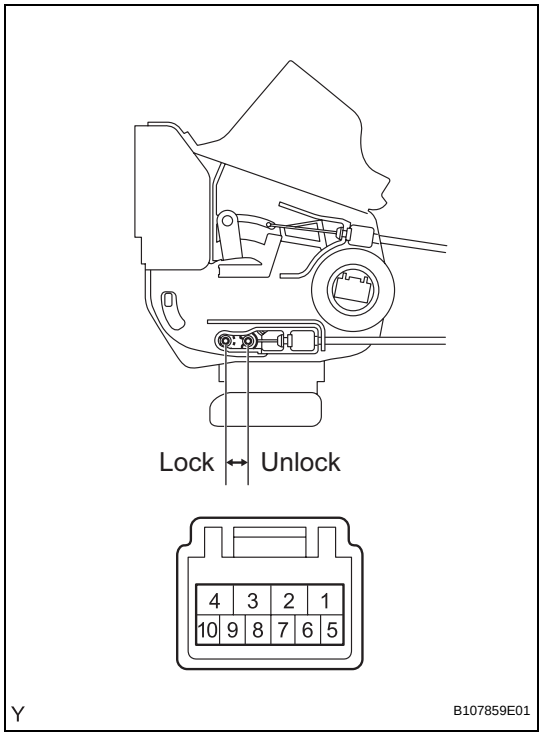

(a) Apply the battery voltage to the door lock motor and check the operation of the door lock motor.
OK

Measurement Condition	Specified Condition
Battery positive (+) → Terminal 4 Battery negative (-) → Terminal 1	Lock
Battery positive (+) → Terminal 1 Battery negative (-) → Terminal 4	Unlock

NG → **REPLACE REAR DOOR LOCK ASSEMBLY LH**

OK

DL

2	**CHECK HARNESS AND CONNECTOR (MAIN BODY ECU - REAR DOOR LOCK ASSEMBLY LH)**

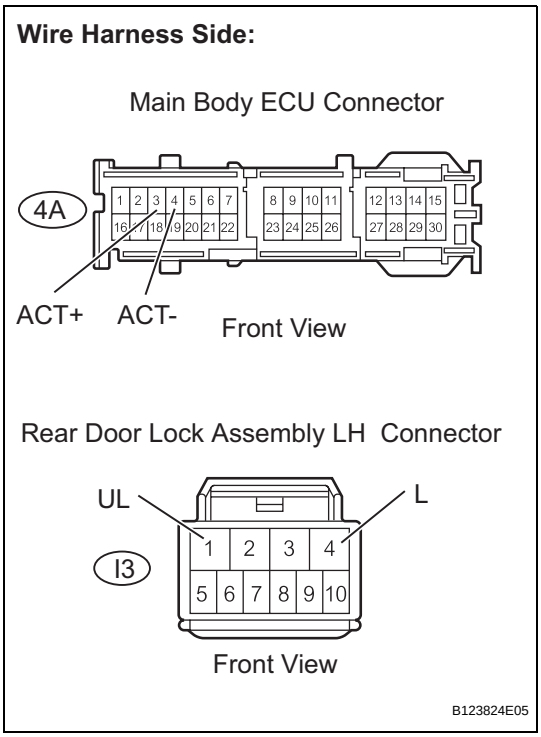

(a) Disconnect the 4A main body ECU connector.
(b) Disconnect the I3 door lock connector.
(c) Measure the resistance.
Standard resistance

Tester Connection	Specified Condition
4A-3 (ACT+) - I3-4 (L)	Below 1 Ω
4A-4 (ACT-) - I3-1 (UL)	Below 1 Ω

(d) Reconnect the main body ECU connector.
(e) Reconnect the door lock connector.

NG → **REPAIR OR REPLACE HARNESS OR CONNECTOR**

OK

REPLACE MAIN BODY ECU

Only Rear Door RH LOCK / UNLOCK Functions do not Operate

DESCRIPTION

The main body ECU receives lock/unlock switch signals and activates the door lock motor accordingly.

WIRING DIAGRAM

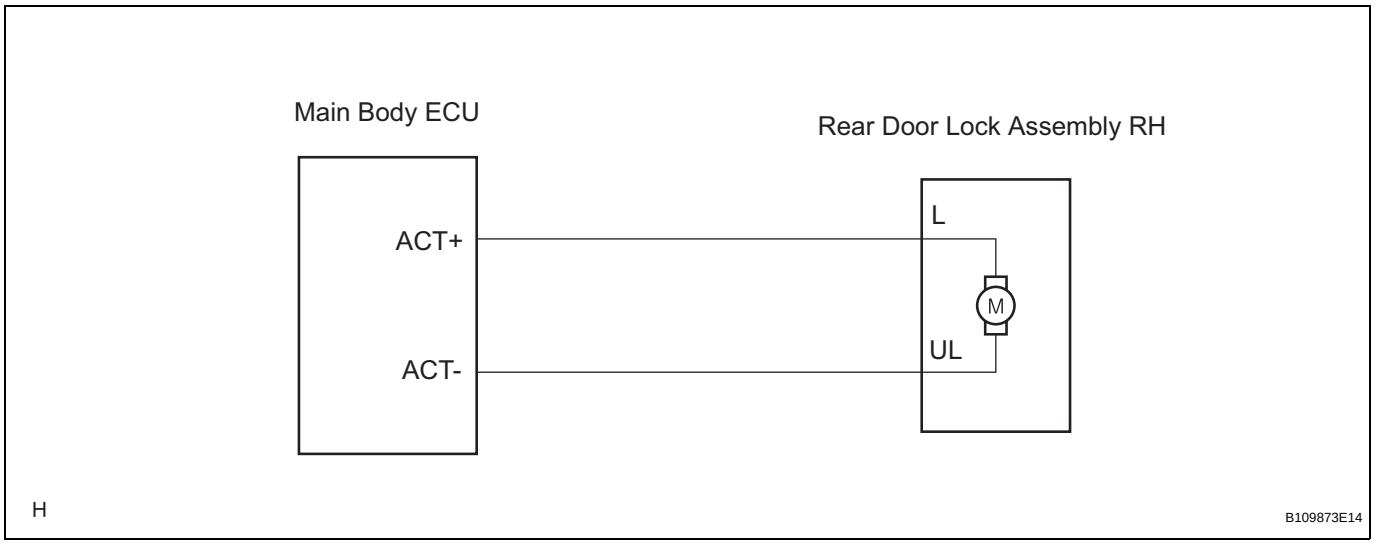

INSPECTION PROCEDURE

1	INSPECT REAR DOOR LOCK ASSEMBLY RH

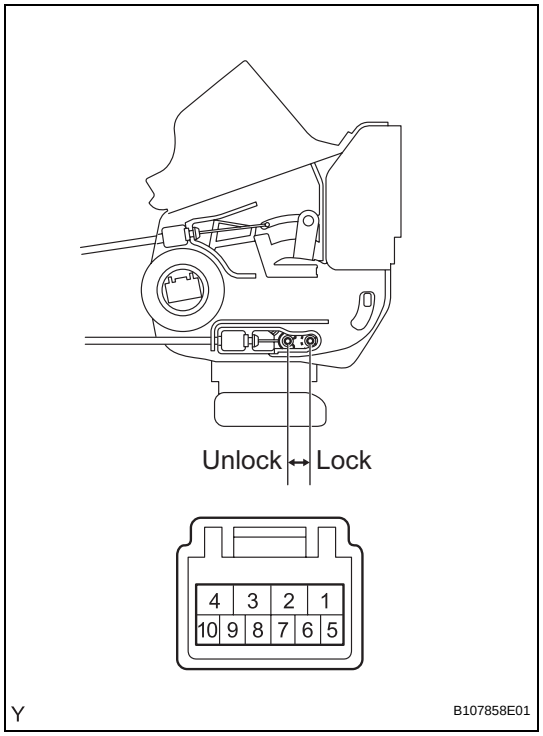

(a) Apply the battery voltage to the door lock motor and check the operation of the door lock motor.
OK

Measurement Condition	Specified Condition
Battery position (+) → Terminal 4 Battery negative (-) → Terminal 1	Lock
Battery position (+) → Terminal 1 Battery negative (-) → Terminal 4	Unlock

NG → **REPLACE REAR DOOR LOCK ASSEMBLY RH**

OK

DL

2	**CHECK HARNESS AND CONNECTOR (MAIN BODY ECU - REAR DOOR LOCK ASSEMBLY RH)**

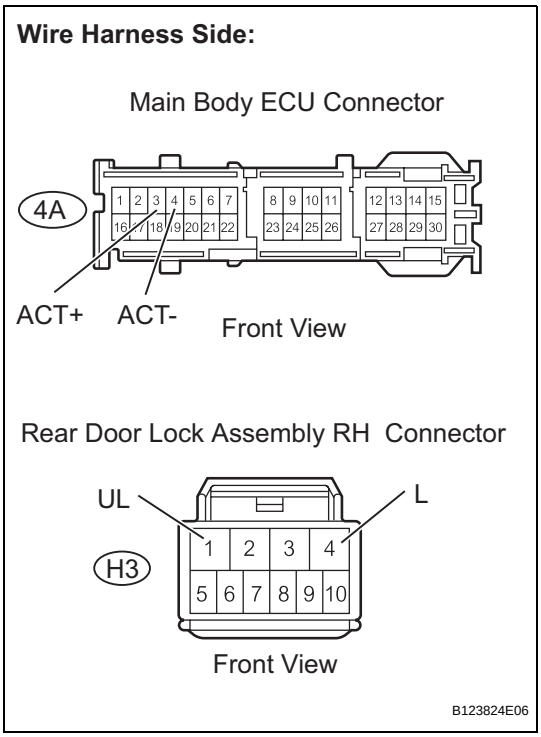

(a) Disconnect the 4A main body ECU connector.
(b) Disconnect the H3 door lock connector.
(c) Measure the resistance.
Standard resistance

Tester Connection	Specified Condition
4A-3 (ACT+) - H3-4 (L)	Below 1 Ω
4A-4 (ACT-) - H3-1 (UL)	Below 1 Ω

(d) Reconnect the main body ECU connector.
(e) Reconnect the door lock connector.

NG → **REPAIR OR REPLACE HARNESS OR CONNECTOR**

OK

REPLACE MAIN BODY ECU

Only Back Door LOCK / UNLOCK Functions do not Operate

DESCRIPTION

This circuit inspection is necessary for hatchback models.
The main body ECU receives lock/unlock switch signals and activates the door lock motor accordingly.

WIRING DIAGRAM

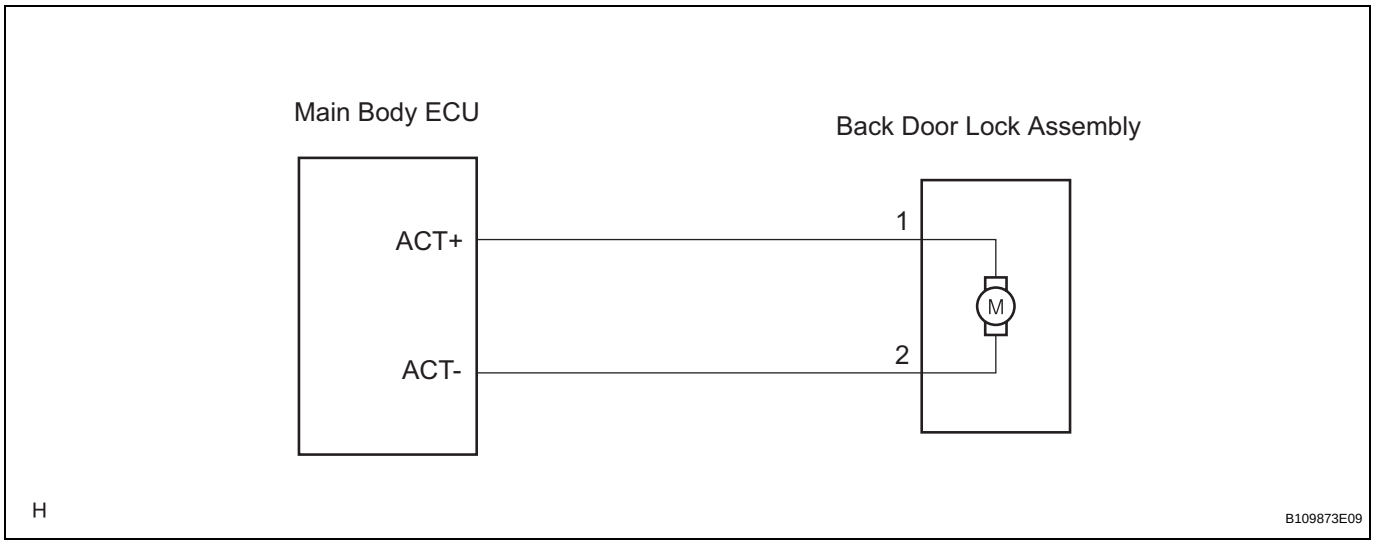

INSPECTION PROCEDURE

1	INSPECT BACK DOOR LOCK ASSEMBLY

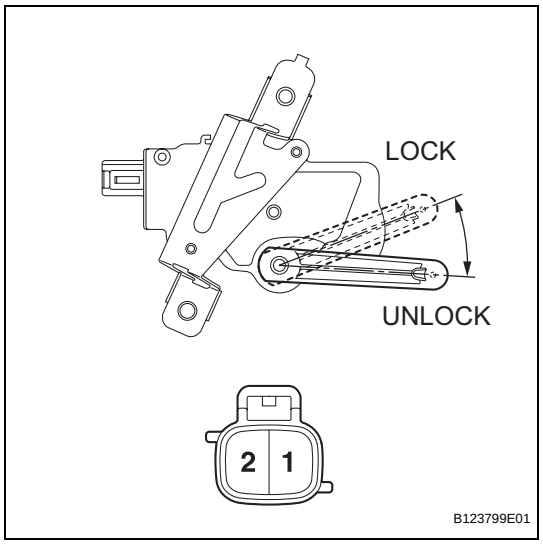

(a) Apply the battery voltage to the door lock motor and check the operation of the door lock motor.
OK

Measurement Condition	Specified Condition
Battery position (+) → Terminal 1 Battery negative (-) → Terminal 2	Lock
Battery position (+) → Terminal 2 Battery negative (-) → Terminal 1	Unlock

NG → **REPLACE BACK DOOR LOCK ASSEMBLY**

OK

DL

2	**CHECK HARNESS AND CONNECTOR (MAIN BODY ECU - BACK DOOR LOCK ASSEMBLY)**

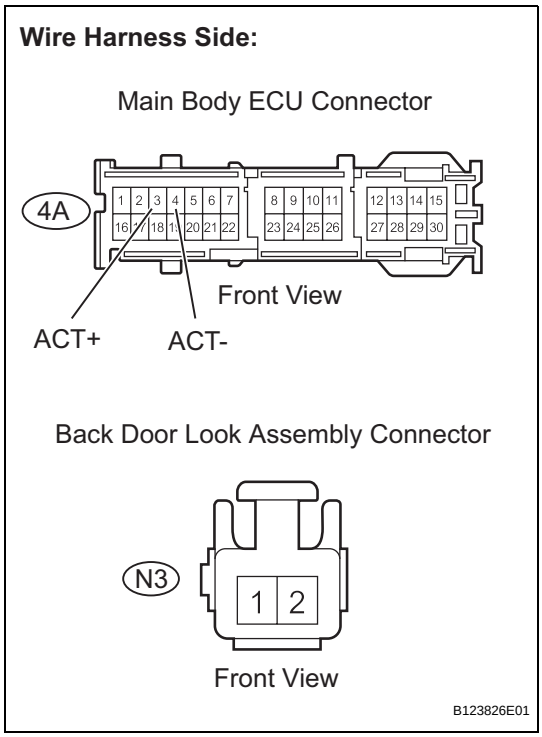

(a) Disconnect the 4A main body ECU connector.
(b) Disconnect the N3 door lock connector.
(c) Measure the resistance.
Standard resistance

Tester Connection	Specified Condition
4A-3 (ACT+) - N3-1	**Below 1 Ω**
4A-4 (ACT-) - N3-2	**Below 1 Ω**

(d) Reconnect the main body ECU connector.
(e) Reconnect the door lock connector.

NG → **REPAIR OR REPLACE HARNESS OR CONNECTOR**

OK

REPLACE MAIN BODY ECU

DL

Key Lock-in Prevention Function does not Work Properly

DESCRIPTION

When the key is in the ignition key cylinder or the door courtesy light ON signal is output to the main body ECU, performing the door lock operation with the lock switch does not lock the doors.
HINT:
Since the key reminder warning system has functions that use CAN communication, firstly confirm that there is no malfunction in the communication system by inspecting the CAN communication functions in accordance with How to Proceed with Troubleshooting. Then, conduct the following troubleshooting procedure.

WIRING DIAGRAM

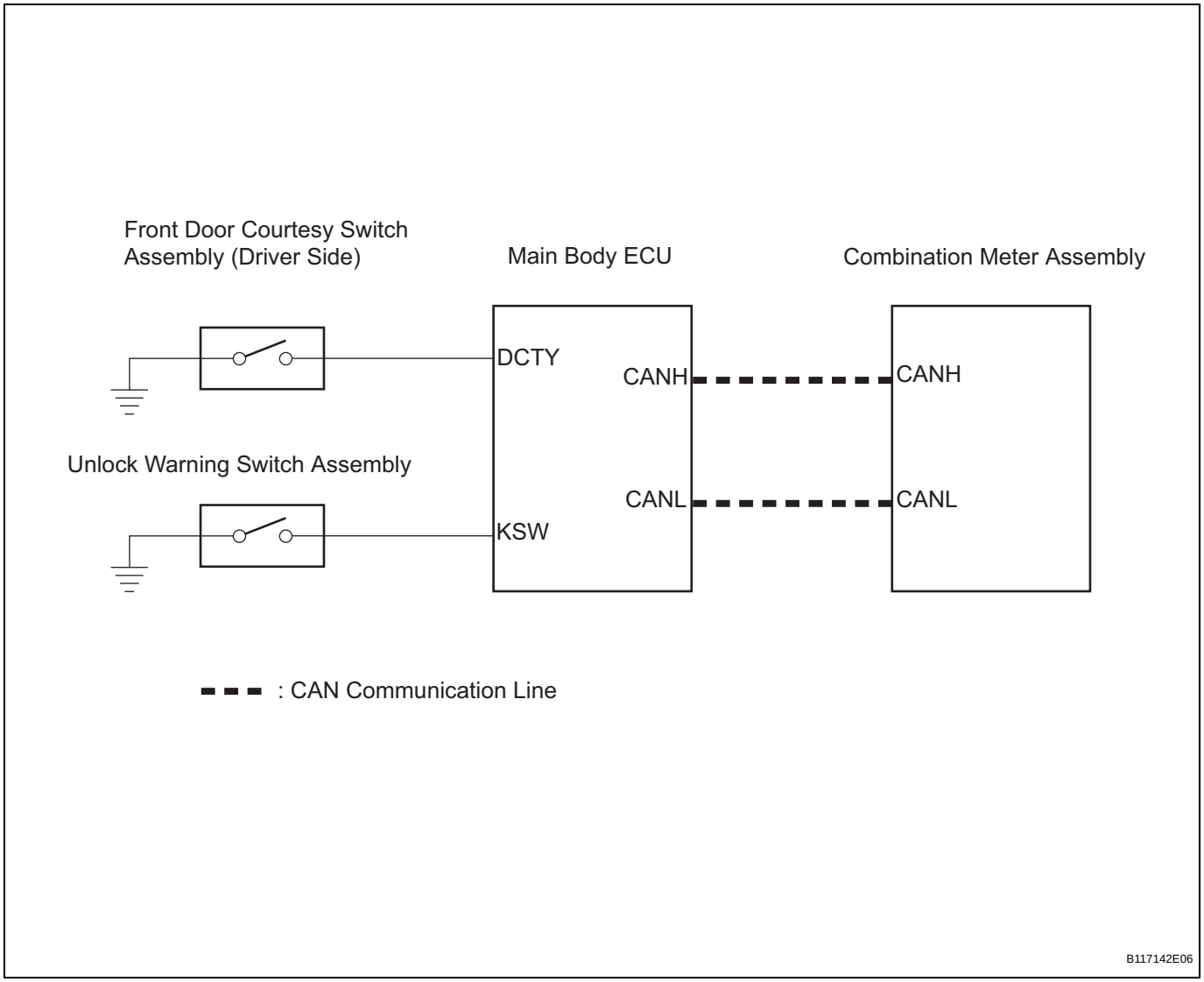

INSPECTION PROCEDURE

1	READ VALUE OF INTELLIGENT TESTER

(a) Use the DATA LIST to check the operation of the front door courtesy light switch.

Main Body ECU

Item	Measurement Item / Display (Range)	Normal Condition	Diagnostic Note
D DOR CTY SW	Driver side door courtesy switch signal / ON or OFF	ON: Driver side door is open OFF: Driver side door is closed	-

OK:
The display is as specified in the normal condition.

NG → **Go to step 5**

OK

2 READ VALUE OF INTELLIGENT TESTER

(a) Use the DATA LIST to check the operation of the door unlock warning switch.

Main Body ECU

Item	Measurement Item / Display (Range)	Normal Condition	Diagnostic Note
KEY UNLK WRN SW	Unlock warning switch signal / ON or OFF	ON: Key is in ignition key cylinder OFF: No key is in ignition key cylinder	-

OK:
The display is as specified in the normal condition.

NG → **REPLACE COMBINATION METER ASSEMBLY**

OK

3 INSPECT UNLOCK WARNING SWITCH ASSEMBLY

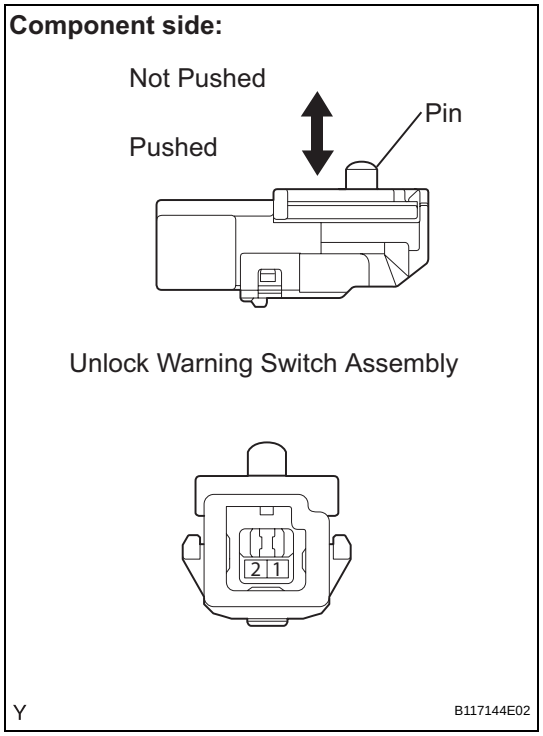

(a) Remove the unlock warning switch assembly.
(b) Measure the resistance.
Standard resistance

Tester Connection	Condition	Specified Condition
1 - 2	Not pushed	10 kΩor higher
1 - 2	Pushed	Below 1 Ω

NG → **REPLACE UNLOCK WARNING SWITCH ASSEMBLY**

OK

4 CHECK HARNESS AND CONNECTOR (UNLOCK WARNING SWITCH ASSEMBLY - MAIN BODY ECU)

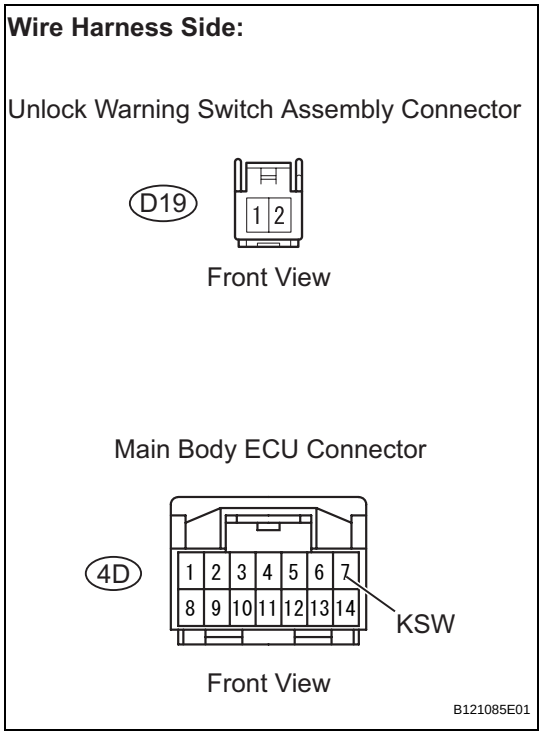

(a) Disconnect the D19 unlock warning switch connector.
(b) Disconnect the 4D main body ECU connector.
(c) Measure the resistance.
Standard resistance

Tester Connection	Specified Condition
D19-1 - 4D-7 (KSW)	Below 1 Ω
D19-2 - Body ground	Below 1 Ω

(d) Reconnect the unlock warning switch connector.
(e) Reconnect the main body ECU connector.

NG → **REPAIR OR REPLACE HARNESS OR CONNECTOR**

DL

OK

REPLACE MAIN BODY ECU

5 INSPECT FRONT DOOR COURTESY SWITCH ASSEMBLY (DRIVER SIDE)

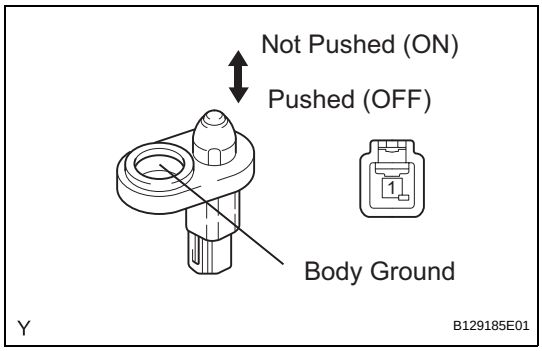

(a) Remove the door courtesy switch.
(b) Measure the resistance.
Standard resistance

Tester Connection	Condition	Specified Condition
1 - Body ground	Not pushed (ON)	Below 1 Ω
1 - Body ground	Pushed (OFF)	10 kΩor higher

(c) Reinstall the courtesy switch.

NG → **REPLACE FRONT DOOR COURTESY SWITCH ASSEMBLY (DRIVER SIDE)**

OK

6	**CHECK HARNESS AND CONNECTOR (FRONT DOOR COURTESY SWITCH - MAIN BODY ECU)**

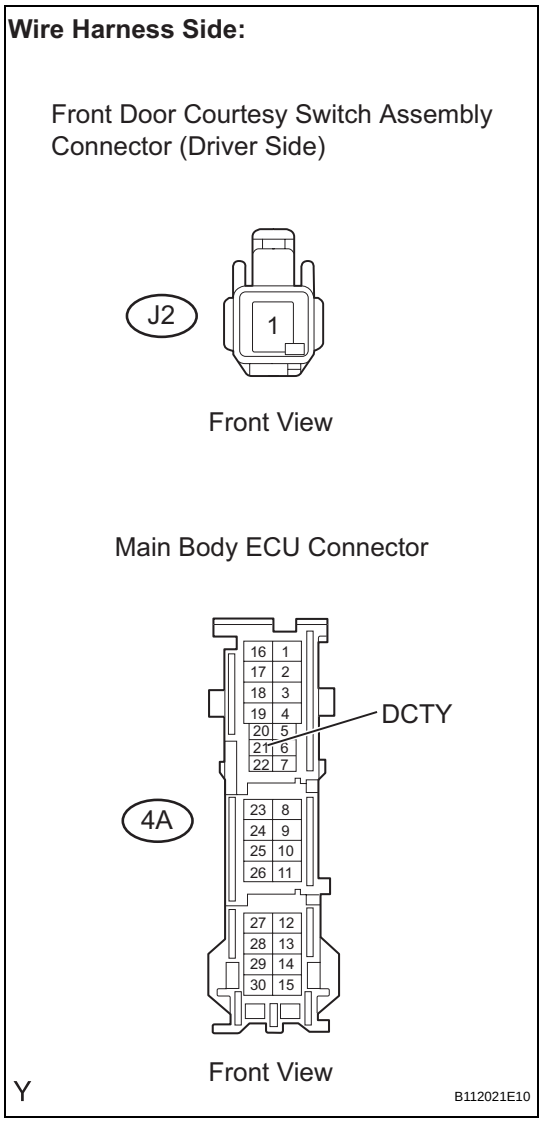

(a) Disconnect the J2 door courtesy switch connector.
(b) Disconnect the 4A main body ECU connector.
(c) Measure the resistance.
Standard resistance

Tester Connection	Specified Condition
J2-1 - 4A-21 (DCTY)	Below 1 Ω

(d) Reconnect the door courtesy switch connector.
(e) Reconnect the main body ECU connector.

NG → **REPAIR OR REPLACE HARNESS OR CONNECTOR**

DL

OK

REPLACE MAIN BODY ECU

WIRELESS DOOR LOCK CONTROL SYSTEM

PARTS LOCATION

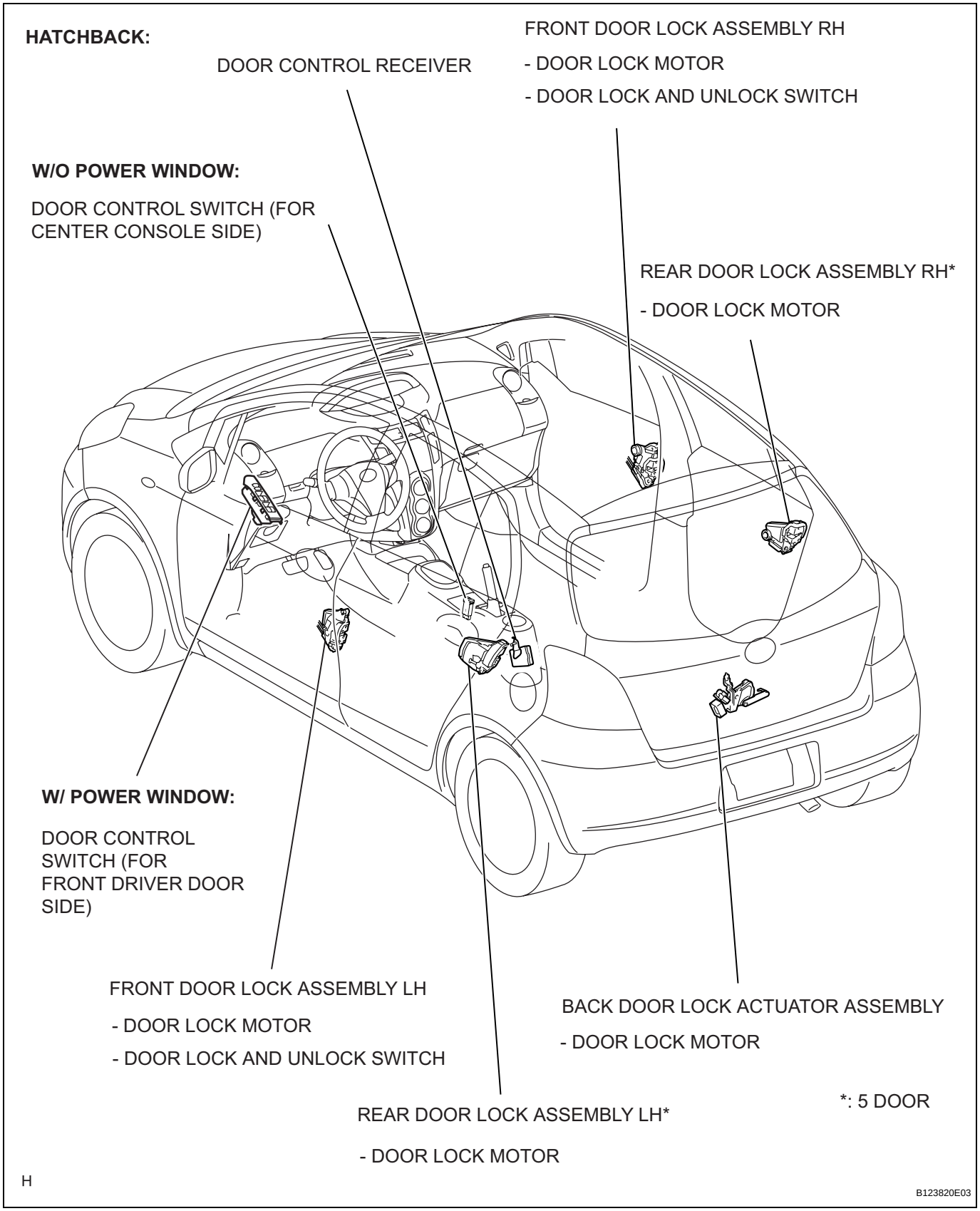

DL

SEDAN:

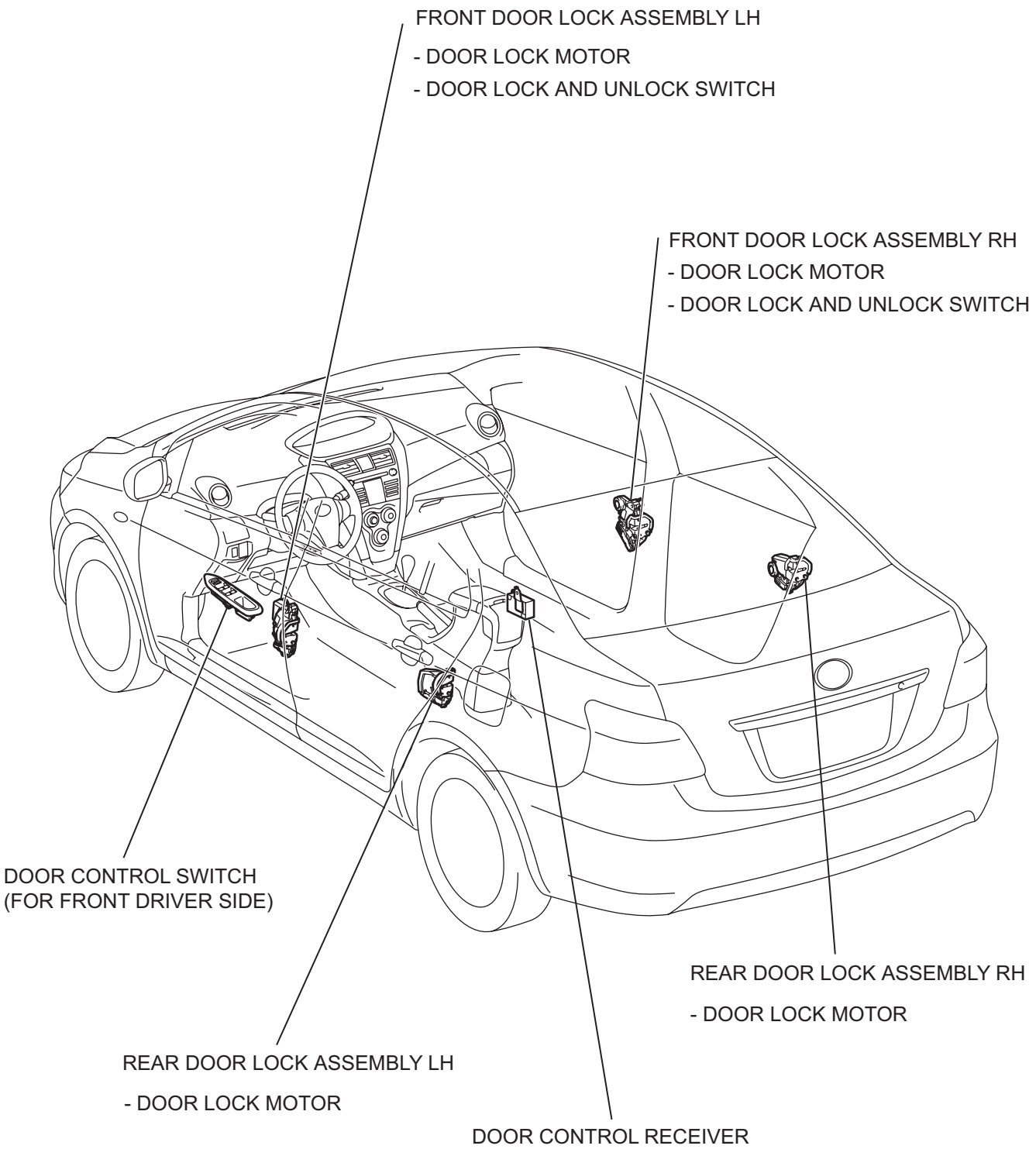

B144913E03

HATCHBACK:

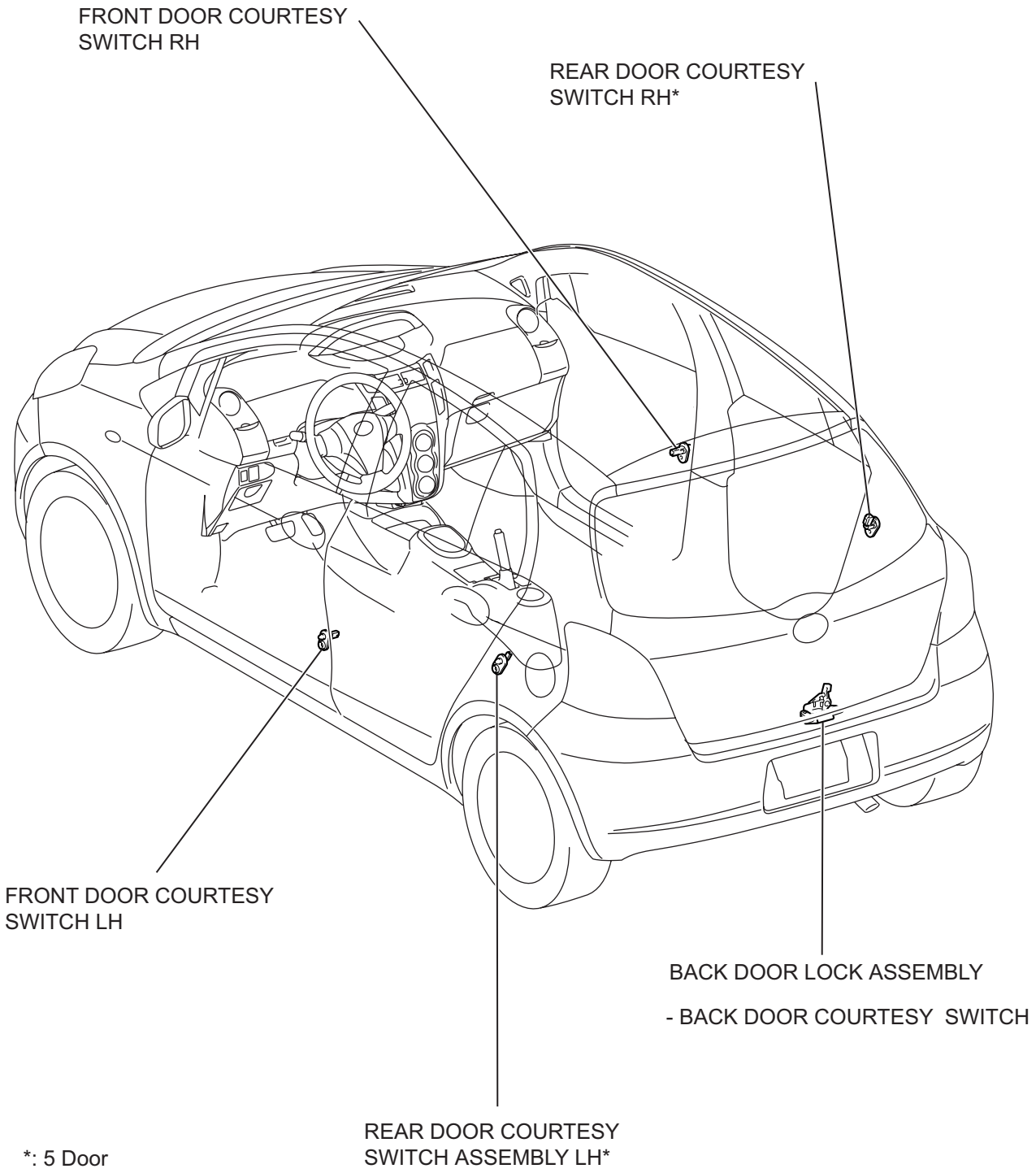

*: 5 Door

H

B123849E05

SEDAN:

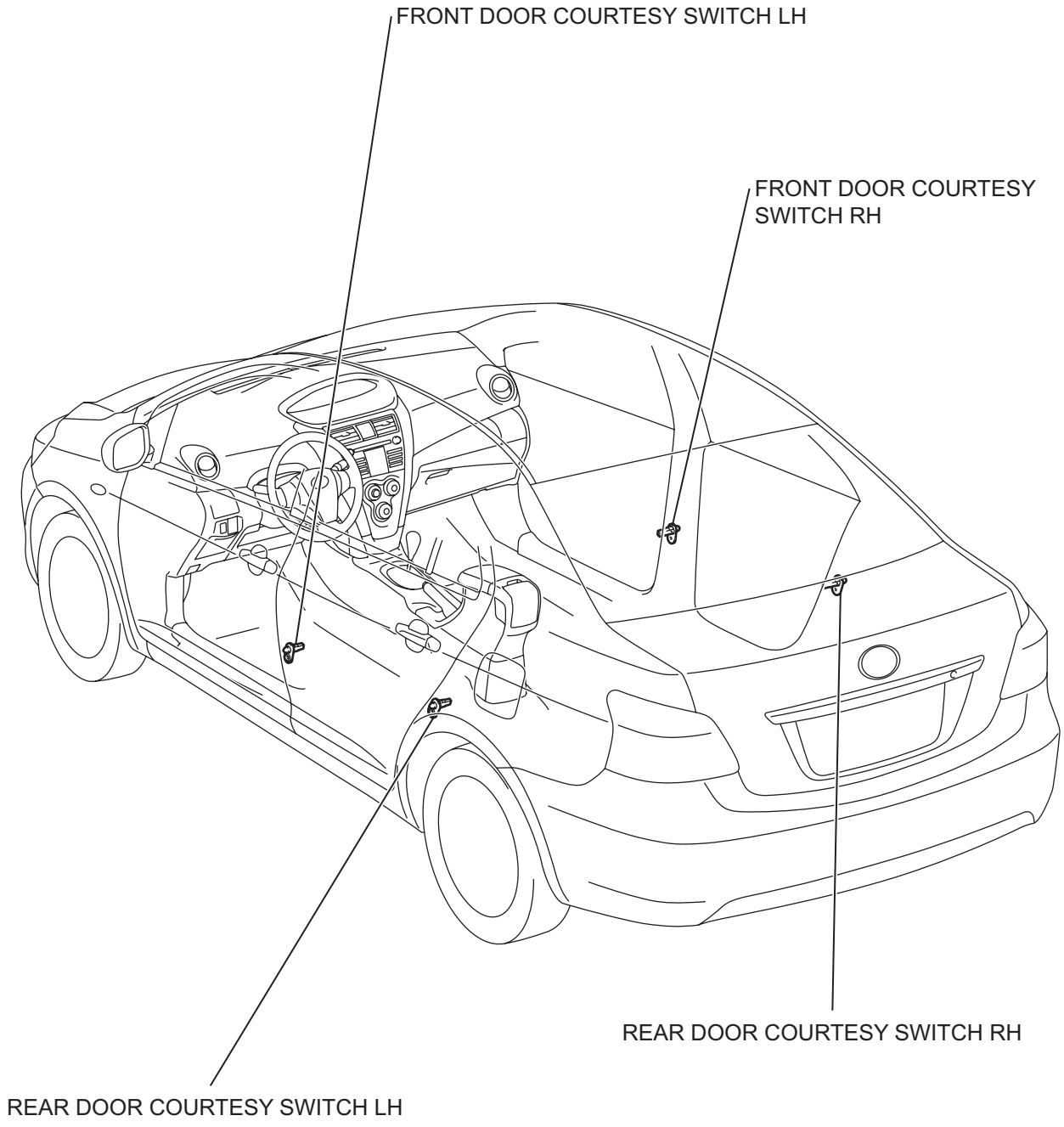

H

B140310E02

HATCHBACK:

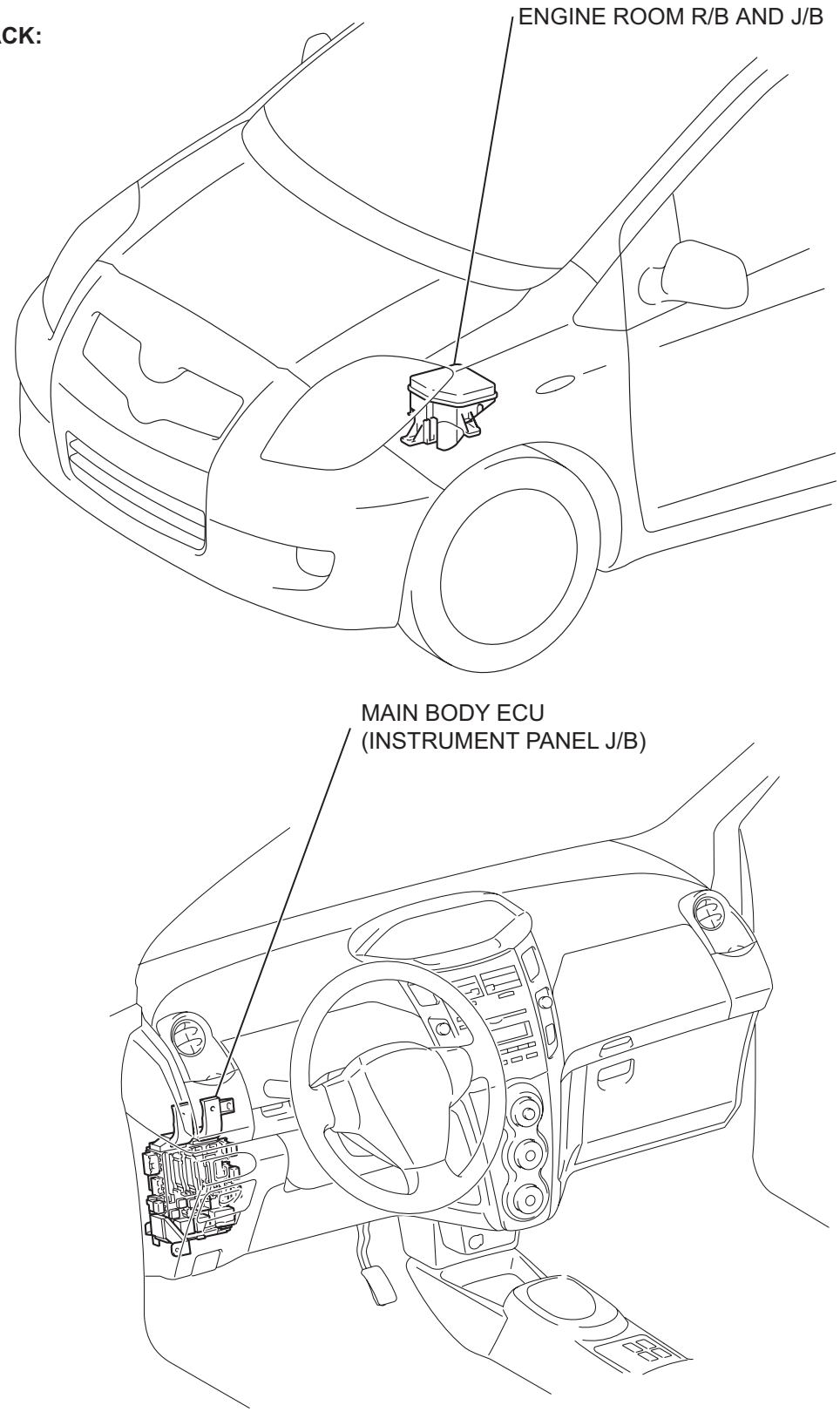

Y

I101011E07

SEDAN:

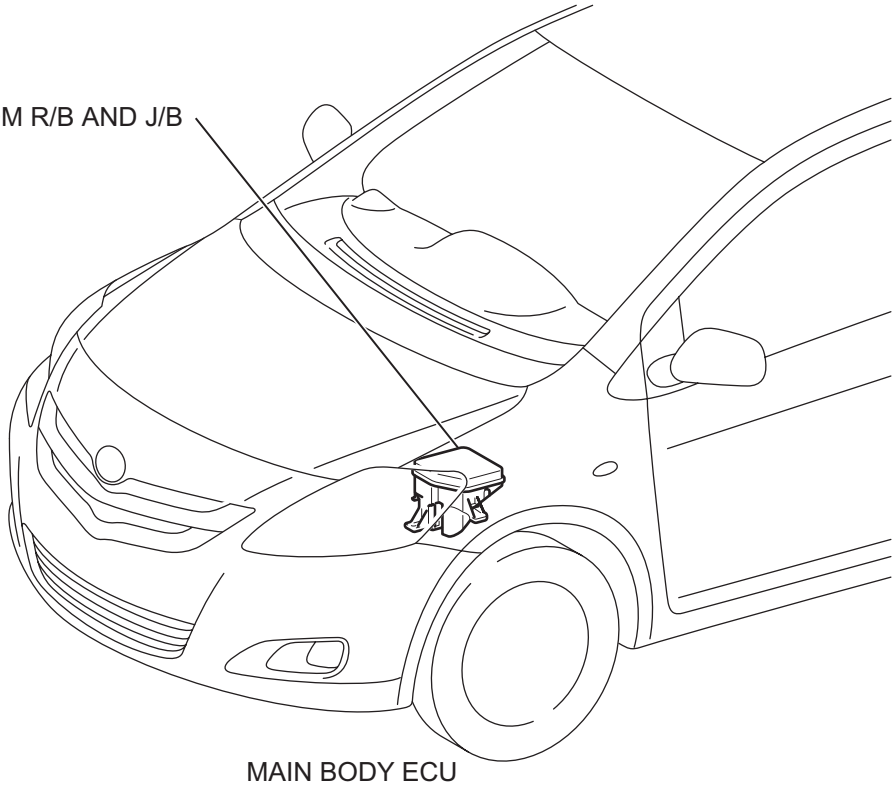

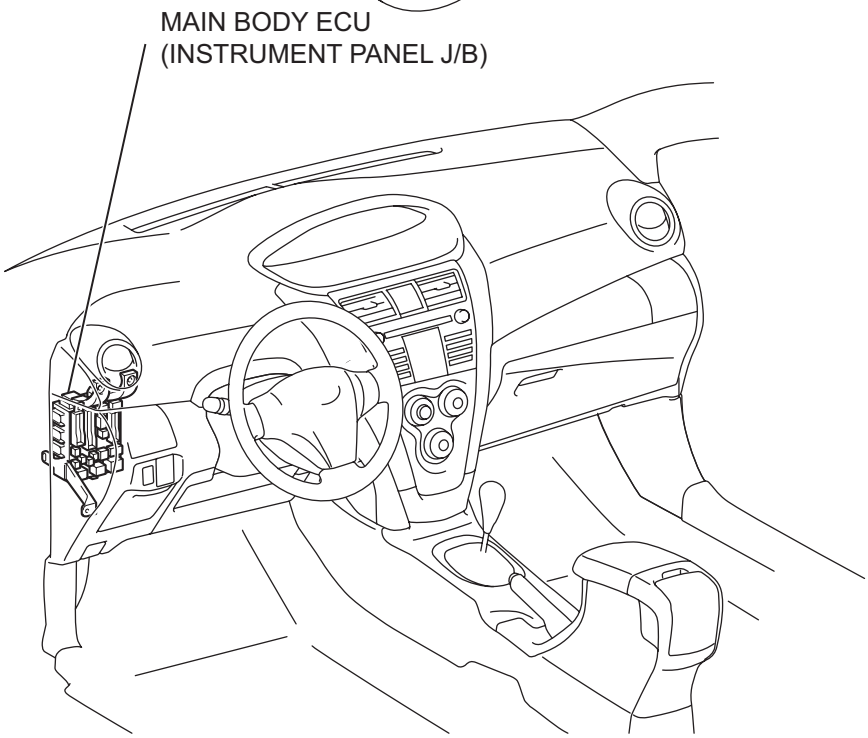

B142328E03

SYSTEM DIAGRAM

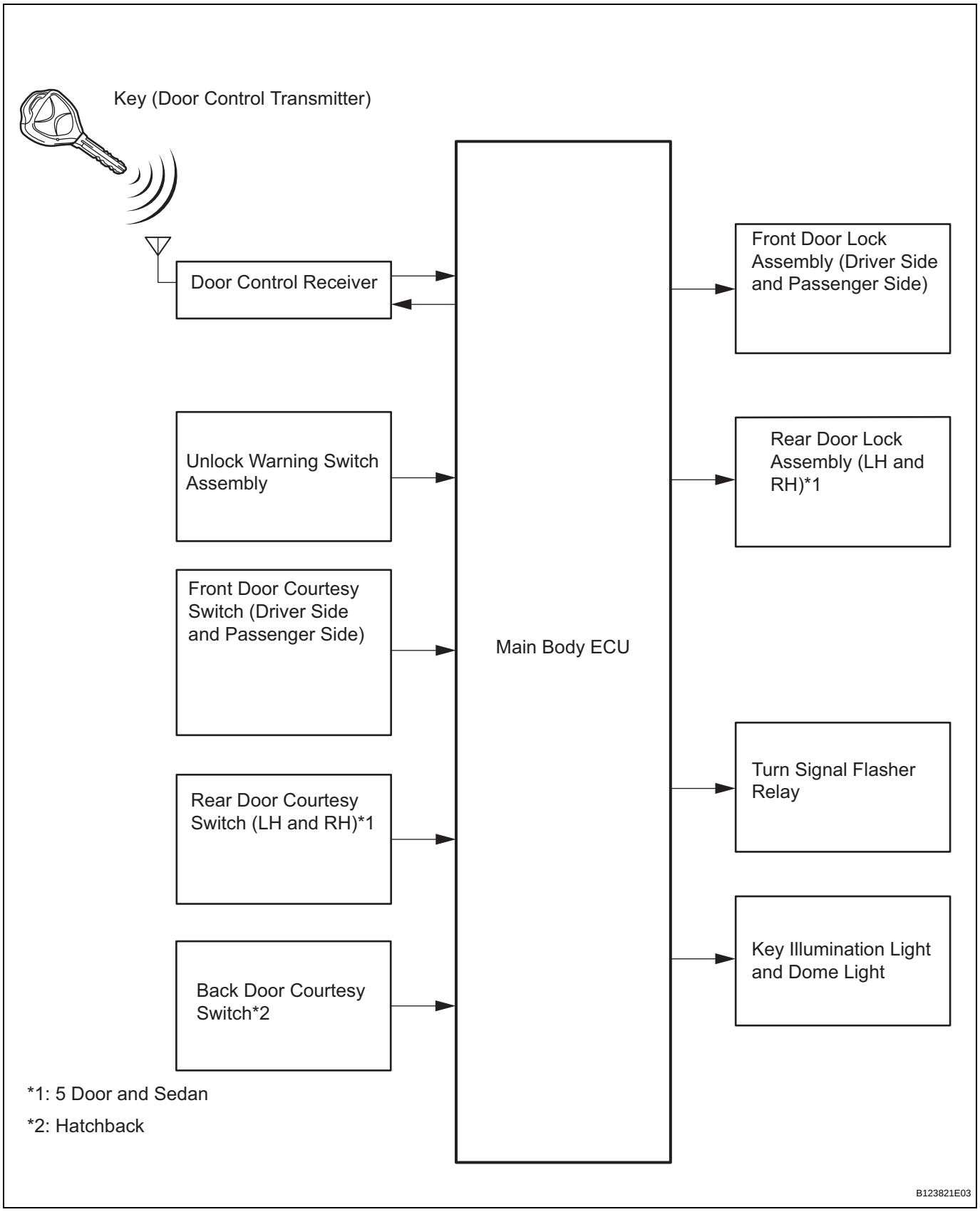

SYSTEM DESCRIPTION

1. WIRELESS DOOR CONTROL SYSTEM DESCRIPTION

(a) This system locks and unlocks the vehicle's doors remotely. The wireless control system has the following features:

- The door control receiver performs the code identification procedure and the main body ECU operates the door lock control. A serial data link is provided for communication between the receiver and main body ECU.
- A key-integrated type transmitter is used and it contains the following 2 switches: the door lock switch and door unlock switch.
- An LED is built into the transmitter so that the battery status can be checked.

2. FUNCTION OF MAIN COMPONENTS

Components	Functions
Door control transmitter	• Contains LOCK and UNLOCK switches • Transmits faint electric waves (recognition codes and function codes) to door control receiver • Illuminates indicator light (LED) during transmission
Door control receiver	Receives weak electric waves (recognition codes and function codes) from door control transmitter, and changes waves to code data
Door lock position switch	Transmits door lock conditions of each door to main body ECU
Unlock warning switch assembly	Detects if key is in ignition key cylinder
Front door courtesy light switch assembly Rear door courtesy light switch assembly Back door courtesy light switch assembly	Turns ON when door is open and turns OFF when door is closed. Outputs door status (open or closed) to main body ECU.

3. SYSTEM FUNCTION

(a) Door lock / unlock function:

With no key in the ignition key cylinder (unlock warning switch is OFF) and all door courtesy light switches OFF, pressing the door control transmitter's LOCK / UNLOCK switch causes the transmitter to output faint electric waves. The transmitter sends the faint electrical wave to the door control receiver. The high frequency circuit built into the door control receiver demodulates the wave into code data, computes the data, and compares the data with previously registered ID codes. If the data is verified, a door lock / unlock request signal is output to the main body ECU. When the request signal is received, the main body ECU outputs a door lock / unlock control signal to each door lock assembly. Each door lock assembly then locks / unlocks its respective door and turns ON / OFF its door lock position switch in accordance with the signal.

(b) Answer-back function:
The main body ECU receives the door unlock detection switch's ON / OFF signals and uses these signals to confirm if the door control operation has been completed. The main body ECU then outputs the hazard warning light control signals to flash the hazard warning lights as an answer-back indication.

(c) The wireless door lock control system has the following functions.

Function	Outline
All door lock function	Pressing LOCK switch locks all doors
All door unlock function	Pressing UNLOCK switch unlocks all doors
Answer-back function	Hazard warning lights flash once when doors are locked, and flash twice when doors are unlocked to indicate that operation has been completed
Automatic locking function	If no doors are opened within 30 seconds after being unlocked by wireless transmitter, all doors are locked again automatically
Illuminated entry function	If locked doors are unlocked through wireless operation, ignition key cylinder light and dome light illuminate. If one of following situations occurs, lights fade out: • Within 15 seconds, doors are not opened and doors are locked through wireless operation • Within 15 seconds, key is inserted into ignition key cylinder and ignition switch is turned ON • No operations or actions are performed within 15 seconds
Panic alarm function	Pressing PANIC switch for more than 1 second sounds horn
Security function	Sends signal as rolling code
Transmitter recognition code registration function	Enables 4 modes for registering (writing and storing) transmitter recognition codes in EEPROM, built into door control receiver

HOW TO PROCEED WITH TROUBLESHOOTING

HINT:
- The wireless door lock control system troubleshooting procedures are based on the premise that the power door lock system is operating normally. Check the power door lock system first before troubleshooting the wireless door lock control system.
- Use these procedures to troubleshoot the wireless door lock control system.
- *: Use the intelligent tester.

1	VEHICLE BROUGHT TO WORKSHOP

NEXT

2	INSPECT BATTERY VOLTAGE

Standard voltage:
11 to 14 V
If the voltage is below 11 V, recharge or replace the battery before proceeding.

NEXT

3	PROBLEM SYMPTOMS TABLE

Result:

Result	Proceed to
Fault is not listed in problem symptoms table	A
Fault is listed in problem symptoms table	B

B → **Go to step 5**

A

4	OVERALL ANALYSIS AND TROUBLESHOOTING*

(a) Terminals of ECU (see page DL-56)
(b) Data List / Active Test (see page DL-63)
(c) On-vehicle Inspection (see page DL-64)

NEXT

5	REPAIR OR REPLACE

NEXT

6	**CONFIRMATION TEST**

NEXT

END

CUSTOMIZE PARAMETERS

1. CUSTOMIZING FUNCTION WITH INTELLIGENT TESTER (REFERENCE)

HINT:
The following items can be customized.

NOTICE:

- **When the customer requests a change in a function, first make sure that the function can be customized.**
- **Record the current settings before customizing.**
- **When troubleshooting a function, first make sure that the function is set to the default setting.**

Wireless door lock control system

Display (Item)	Default	Contents	Setting
HAZARD ANS BACK	ON	When wireless lock switch on transmitter pressed, illuminates all hazard warning lights once. When unlock switch pressed, all hazard warning lights illuminate twice	ON / OFF
WIRELESS OPER	ON	ON /OFF of wireless door lock function	ON / OFF
ALARM FUNCTION	ON	Operates security alarm when panic switch on transmitter continuously pressed for 1 second	ON / OFF
UNLOCK/2 OPER	ON	Function that unlocks driver side door when unlock switch on transmitter is pressed once, and unlocks all doors when pressed twice. if setting is OFF, pressing unlock switch once makes all doors unlock.	ON / OFF
AUTO LOCK DELAY	30 seconds	Time until relocking after unlocking with wireless door lock function	60 seconds / 30 seconds

PROBLEM SYMPTOMS TABLE

Use the table below to help determine the cause of the problem symptom. The potential causes of the symptoms are listed in order of probability in the "Suspected Area" column of the table. Check each symptom by checking the suspected areas in the order they are listed. Replace parts as necessary.

Wireless door lock control

Symptom	Suspected area	See page
Only wireless control function inoperative	Transmitter battery	DL-71
	Door control transmitter	DL-71
	Door control receiver	DL-71
	Wire harness	DL-71
	Main body ECU	DL-71
No answer-back	Lighting system	DL-79
	Wire harness	DL-79
	Main body ECU	DL-79

TERMINALS OF ECU

1. CHECK MAIN BODY ECU

Main Body ECU (Rear View):

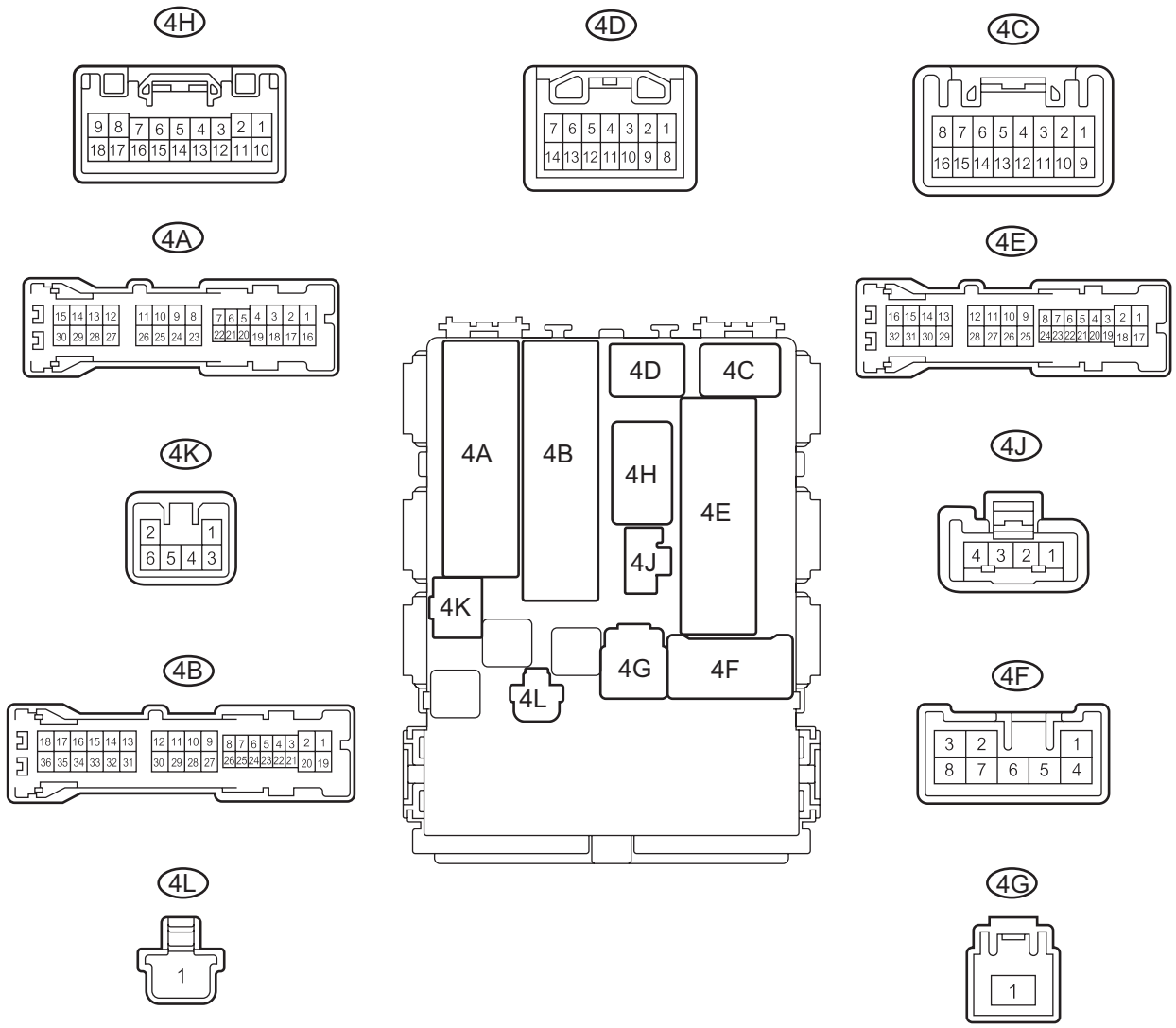

H

E114510E06

Main Body ECU (Front View):

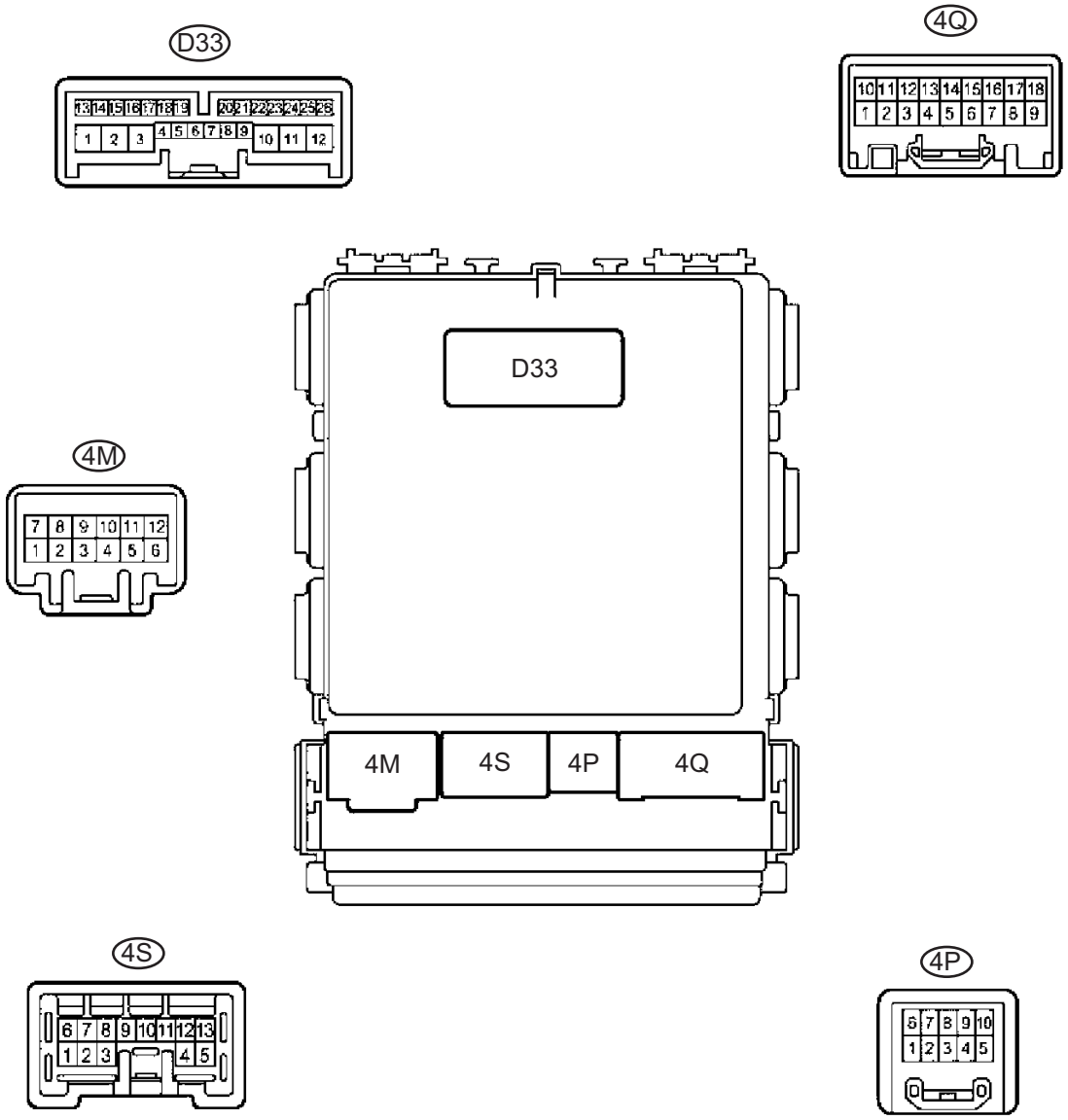

B108641E09

(a) Disconnect the 4B and 4E main body ECU (vehicle rear side) connectors.

(b) Measure the voltage and resistance of the wire harness side connectors.

Standard:

Symbols (Terminal No.)	Wiring Color	Terminal Description	Condition	Specified Condition
BECU (4B-30) - GND1 (4E-17)	L - W-B	Battery (power supply)	Always	11 to 14 V
GND1 (4E-17) - Body ground	W-B - Body ground	Ground	Always	Below 1 Ω

If the result is not as specified, there may be a malfunction in the wire harness.

(c) Reconnect the main body ECU (vehicle rear side) connectors.

(d) Measure the voltage of the wire harness side connectors.

Standard voltage:

Symbols (Terminal No.)	Wiring Color	Terminal Description	Condition	Specified Condition
KSW (4D-7) - GND1 (4E-17)	Y - W-B	Key unlock warning switch input	Key inserted	0 V
KSW (4D-7) - GND1 (4E-17)	Y - W-B	Key unlock warning switch input	No key in ignition key cylinder	11 to 14 V
DCTY (4A-21) - Body ground	R - Body ground	Driver side door courtesy switch input	Driver side door closed	11 to 14 V
DCTY (4A-21) - Body ground	R - Body ground	Driver side door courtesy switch input	Driver side door open	0 V
PCTY (4A-24) - Body ground	L - Body ground	Passenger side door courtesy switch input	Passenger side door closed	11 to 14 V
PCTY (4A-24) - Body ground	L - Body ground	Passenger side door courtesy switch input	Passenger side door open	0 V
RRCY (4A-20) - Body ground*3	L - Body ground	Rear RH door courtesy switch input	Rear RH door closed	11 to 14 V
RRCY (4A-20) - Body ground*3	L - Body ground	Rear RH door courtesy switch input	Rear RH door open	0 V
RRCY (4A-5) - Body ground*3	G - Body ground	Rear LH door courtesy switch input	Rear LH door closed	11 to 14 V
RRCY (4A-5) - Body ground*3	G - Body ground	Rear LH door courtesy switch input	Rear LH door open	0 V
RRCY (4A-5) - Body ground*4	Y - Body ground	Rear LH and RH door courtesy switch input	Rear LH and RH door closed	11 to 14 V
RRCY (4A-5) - Body ground*4	Y - Body ground	Rear LH and RH door courtesy switch input	Rear LH and RH door open	0 V
BCTY (4A-7) - Body ground*1	SB- Body ground	Back door courtesy switch input	Back side door closed	11 to 14 V
BCTY (4A-7) - Body ground*1	SB- Body ground	Back door courtesy switch input	Back side door open	0 V
LGCY (4A-7) - Body ground*2	SB- Body ground	Luggage room courtesy switch input	Luggage room closed	11 to 14 V
LGCY (4A-7) - Body ground*2	SB- Body ground	Luggage room courtesy switch input	Luggage room open	0 V
PRG (D33-17) - Body ground	W - Body ground	Door control receiver output	Transmitter switch ON → OFF (No key in ignition key cylinder, all doors closed)	6 to 7 V → Below 1 V → 6 to 7 V
RDA (D33-16) - Body ground	R - Body ground	Door control receiver input	Transmitter switch ON → OFF (No key in ignition key cylinder, all doors closed)	Below 1 V → 6 to 7 V → Below 1 V
HAZ (4S-17) - Body ground	B- Body ground	Hazard warning light signal	Answer-back ON	Pulse generation
HAZ (4S-17) - Body ground	B- Body ground	Hazard warning light signal	Answer-back OFF	11 to 14 V

*1: Hatchback
*2: Sedan
*3: Hatchback, Sedan except *5
*4: Sedan *5
*5: Cold area specification, w/ Engine immobilizer system, w/ ABS, w/ Rear window defogger, w/ Power door lock system, w/ Daytime running light, w/ Remote control mirror, w/ Air conditioning
If the result is not as specified, there may be a malfunction in the wire harness.

2. CHECK DOOR CONTROL RECEIVER

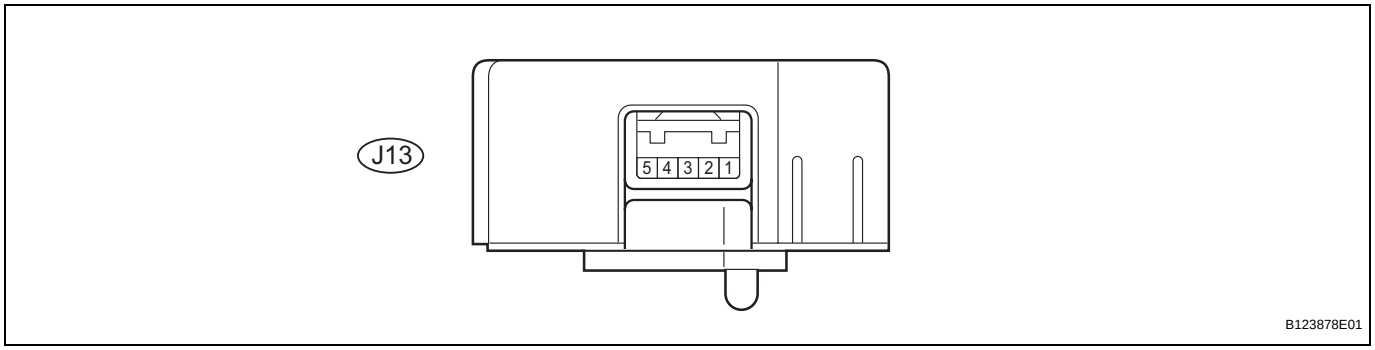

(a) Disconnect the door control receiver connector.
(b) Measure the voltage and resistance of the wire harness side connectors.

Standard:

Symbols (Terminal No.)	Wiring Color	Terminal Description	Condition	Specified Condition
+B (J13-5) - GND (J13-1)	L - W-B	Battery (power supply)	Always	11 to 14 V
GND (J13-1) - Body ground	W-B - Body ground	Ground	Always	Below 1 Ω

If the result is not as specified, there may be a malfunction in the wire harness.

(c) Reconnect the door control receiver connector.
(d) Measure the voltage of the wire harness side connectors.

Standard voltage:

Symbols (Terminal No.)	Wiring Color	Terminal Description	Condition	Specified Condition
PRG (J13-3) - Body ground	W - Body ground	Door control receiver output	Transmitter switch ON → OFF (No key in ignition key cylinder, all doors closed)	6 to 7 V → Below 1 V → 6 to 7 V
RDA (J13-2) - Body ground	R - Body ground	Door control receiver input	Transmitter switch ON → OFF (No key in ignition key cylinder, all doors closed)	Below 1 V → 6 to 7 V → Below 1 V

If the result is not as specified, there may be a malfunction in the wire harness.

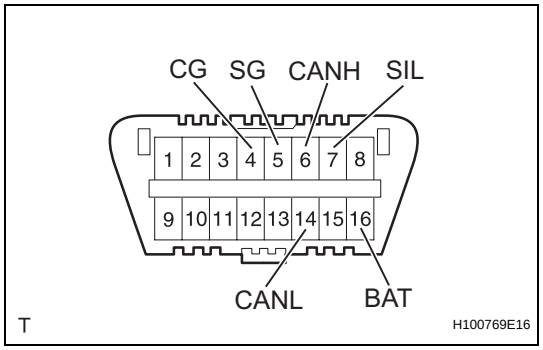

DIAGNOSIS SYSTEM

1. CHECK DLC3

(a) The ECU uses ISO 15765-4 for communication. The terminal arrangement of the DLC3 complies with SAE J1962 and matches the ISO 15765-4 format.

Symbols (Terminal No.)	Terminal Description	Condition	Specified Condition
SIL (7) - SG (5)	Bus " +" line	During transmission	Pulse generation
CG (4) - Body ground	Chassis ground	Always	Below 1 Ω
SG (5) - Body ground	Signal ground	Always	Below 1 Ω
BAT (16) - Body ground	Battery positive	Always	11 to 14 V
CANH (6) - CANL (14)	CAN bus line	Ignition switch OFF*	54 to 69 Ω

Symbols (Terminal No.)	Terminal Description	Condition	Specified Condition
CANH (6) - CG (4)	HIGH-level CAN bus line	Ignition switch OFF*	200 Ω or higher
CANL (14) - CG (4)	LOW-level CAN bus line	Ignition switch OFF*	200 Ω or higher
CANH (6) - BAT (16)	HIGH-level CAN bus line	Ignition switch OFF*	6 kΩ or higher
CANL (14) - BAT (16)	LOW-level CAN bus line	Ignition switch OFF*	6 kΩ or higher

NOTICE:
***: Before measuring the resistance, leave the vehicle as is for at least 1 minute and do not operate the ignition switch, any other switches or the doors.**
If the result is not as specified, the DLC3 may have a malfunction. Repair or replace the harness and connector.

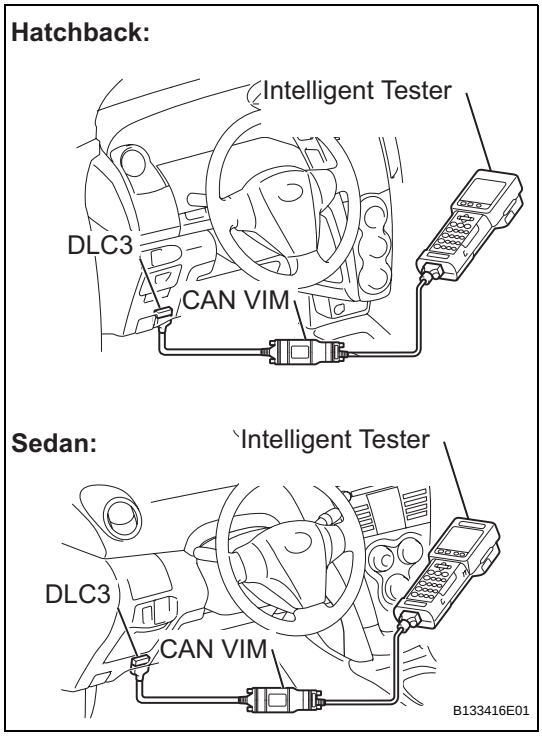

HINT:
Connect the cable of the intelligent tester to the CAN VIM, connect the CAN VIM to the DLC3, turn the ignition switch ON and attempt to use the tester. If the display indicates that a communication error has occurred, there is a problem either with the vehicle or with the tester.

- If communication is normal when the tester is connected to another vehicle, inspect the DLC3 of the original vehicle.
- If communication is still not possible when the tester is connected to another vehicle, the problem is probably in the tester itself. Consult the Service Department listed in the tester's instruction manual.

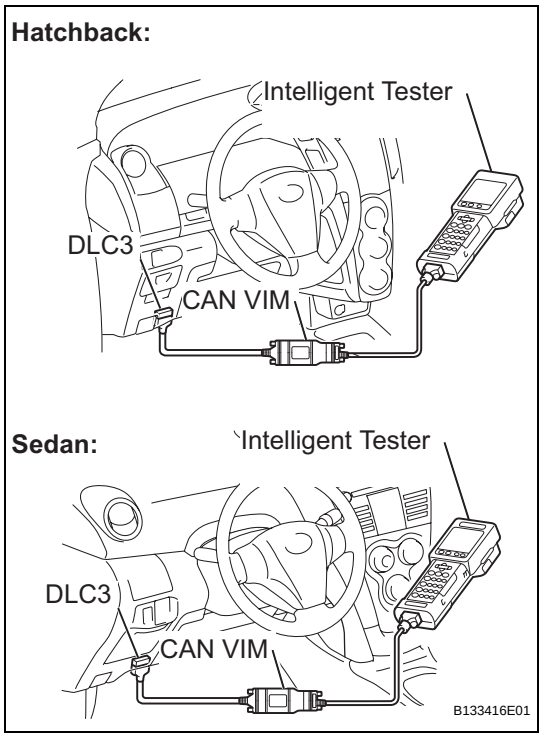

DTC CHECK / CLEAR

1. DTC CHECK

(a) Connect the intelligent tester with CAN VIM to the DLC3.

(b) Turn the ignition switch ON.

(c) Read the DTCs by following the prompts on the tester's screen.

HINT:

Refer to the intelligent tester operator's manual for further details.

2. DTC CLEAR

(a) Connect the intelligent tester with CAN VIM to the DLC3.

(b) Turn the ignition switch ON.

(c) Erase the DTCs by following the prompts on the tester's screen.

HINT:

Refer to the intelligent tester operator's manual for further details.

3. SELF-DIAGNOSTIC MODE (OPERATING IGNITION KEY CYLINDER)

(a) Switch to self-diagnostic mode.

(1) Establish the vehicle's initial condition.

(2) Insert the key into the ignition key cylinder and remove it.

(3) Within 5 seconds of removing the key, insert it into the ignition key cylinder again.

(4) Turn the ignition switch ON and then OFF.

(5) Within 30 seconds of turning the ignition switch OFF, perform the following operation 9 more times: Turn the ignition switch ON and then OFF.

HINT:

- Turning the ignition switch ON after the procedure above has been completed ends self-diagnostic mode.
- Do not lock or unlock doors while in self-diagnostic mode.

NOTICE:

If the system cannot enter self-diagnostic mode, the system returns to normal mode.

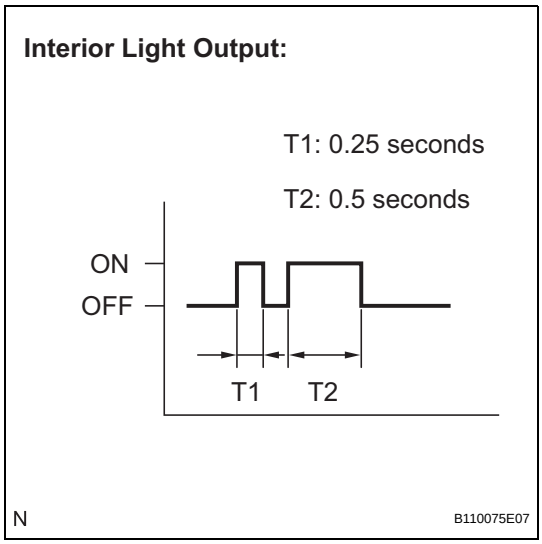

(b) Check that the system has switched to self-diagnostic mode by checking the flash pattern of the interior light.

(c) Check the diagnostic outputs when the door control transmitter switch is held down. The diagnostic outputs can be checked by the flash patterns of the interior light.

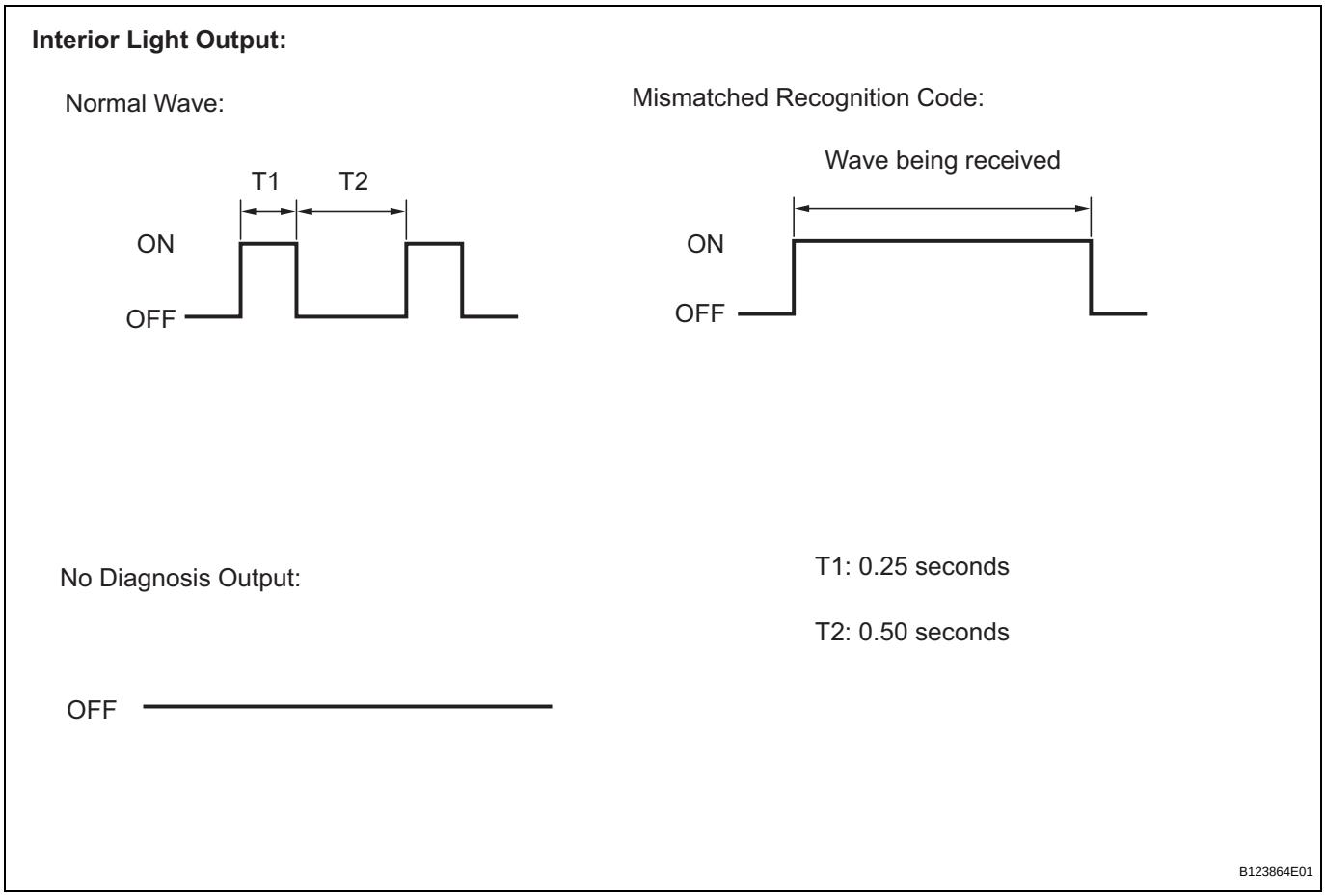

4. SELF-DIAGNOSTIC MODE (USING INTELLIGENT TESTER)

(a) Switch to self-diagnostic mode.

(1) Connect the intelligent tester to the DLC3.

(2) Turn the ignition switch ON and turn the intelligent tester main switch on.

HINT:

Refer to the intelligent tester operator's manual for further details.

DATA LIST / ACTIVE TEST

1. READ DATA LIST

HINT:
Using the intelligent tester's DATA LIST allows switch, sensor, actuator and other item values to be read without removing any parts. Reading the DATA LIST early in troubleshooting is one way to save time.

(a) Connect the intelligent tester to the DLC3.
(b) Turn the ignition switch ON.
(c) Read the DATA LIST in accordance with the display on the tester.

Main body ECU:

Item	Measurement Item/Display (Range)	Normal Condition	Diagnostic Note
D DOR CTY SW	Driver side door courtesy light switch signal/ ON or OFF	ON: Driver side door is open OFF: Driver side door is closed	-
D LOCK POS SW	Driver side door lock position switch signal/ ON or OFF	ON: Driver side door is unlocked OFF: Driver side door is locked	-
D/L SW-LOCK	Door manual lock switch signal/ ON or OFF	ON: Door control switch (for front driver door side) is turned to lock position OFF: Door control switch (for front driver door side) is turned to unlock position	-
D/L SW-UNLOCK	Door manual unlock switch signal/ ON or OFF	ON: Door control switch (for front driver door side) is turned to unlock position OFF: Door control switch (for front driver door side) is turned to lock position	-
DOR KEY SW-LOCK	Door key linked lock switch signal/ ON or OFF	ON: Driver side door key cylinder is turned to lock position OFF: Driver side door key cylinder is turned to unlock position	-
DOR KEY SW-UNLOCK	Door key linked unlock switch signal/ ON or OFF	ON: Driver side door key cylinder is turned to unlock position OFF: Driver side door key cylinder is turned to lock position	-
D DOR KEY SW-UL	Driver side door key linked unlock switch signal/ ON or OFF	ON: Driver side door key cylinder is turned to unlock position OFF: Driver side door key cylinder is turned to lock position	-
P DOR CTY SW	Passenger side door courtesy light switch signal/ ON or OFF	ON: Passenger side door is open OFF: Passenger side door is closed	-
RR DOR CTY SW*1	Rear door RH courtesy light switch signal/ ON or OFF	ON: Rear door RH is open OFF: Rear door RH is closed	-
RL DOR CTY SW*1	Rear door LH courtesy light switch signal/ ON or OFF	ON: Rear door LH is open OFF: Rear door LH is closed	-
BACK DOR CTY SW*2	BACK DOR CTY SW	ON: Back door is open OFF: Back door is closed	-
KEY UNLK WRN SW	Unlock warning switch / ON or OFF	ON: Ignition key is inserted OFF: Ignition key is not inserted	-

*1: 5 Door, Sedan
*2: Hatchback

2. PERFORM ACTIVE TEST

HINT:

Performing the intelligent tester's ACTIVE TEST allows relays, VSV, actuators and other items to be operated without removing any parts. Performing the ACTIVE TEST early in troubleshooting is one way to save time. The DATA LIST can be displayed during the ACTIVE TEST.

(a) Connect the intelligent tester to the DLC3.
(b) Turn the ignition switch ON.
(c) Perform the ACTIVE TEST in accordance with the display on the tester.

Main body ECU:

Item	Test Details	Diagnostic Note
DOOR LOCK	Operate door lock motor LOCK/UNLOCK	-
D DOOR UNLOCK	Operate driver door lock motor unlock side ON/OFF	-
HAZARD	Turns turn signal flasher relay ON / OFF	-

DIAGNOSTIC TROUBLE CODE CHART

HINT:

- If a trouble code is displayed during the DTC check, inspect the suspected areas listed for that code. For details of the code, refer to the "See page" in the DTC chart.
- Inspect the fuse and relay before investigating the suspected areas shown in the table below.

Wirelass Door Lock Control

DTC No.	Detection Item	Suspected Area	See page
B1242	Wireless Door Lock Tuner Circuit Malfunction	1. Wire harness 2. Door control receiver 3. Main body ECU	DL-67

ON-VEHICLE INSPECTION

1. NOTICES WHEN CHECKING

(a) Wireless door LOCK / UNLOCK function:
This function operates only when the vehicle is in its initial condition (the following 3 conditions are met).
(1) No key is inserted into the ignition key cylinder.
(2) All the doors are closed.
(3) The power door lock system is functioning normally.
HINT:
- The UNLOCK function operates even when one of the doors is open.
- The UNLOCK function operates even when the key is inserted into the ignition key cylinder. However, the ignition switch must be OFF.

(b) The operating range differs depending on the situation.
(1) The operating range differs depending on the user, the way the transmitter is held and the location.
(2) In certain areas, the operating range will be reduced due to the vehicle body shape and the influence of the surrounding environment.
(3) The transmitter's faint electric waves may be affected if the area has strong electric waves or noise. The transmitter's operating range may be reduced or the transmitter may not function.
(4) When the battery weakens, the operating range is reduced or the transmitter may not function.
HINT:
If the transmitter has had prolonged exposure to direct sunlight, such as being left on the instrument panel, the battery may weaken or other problems may occur.

2. CHECK WIRELESS DOOR LOCK CONTROL FUNCTIONS

HINT:
- The switches described below transmit signals and are built into the door control transmitter.
- The transmitter's operating range must be taken into account while checks are being made.

(a) Make sure the vehicle is in a condition in which the wireless control functions can be operated (see above).
(b) Check the basic functions.
(1) Check that the transmitter's LED illuminates 3 times when each switch is pressed 3 times.
HINT:
If the LED does not illuminate when the switch has been pressed 3 times or more, the battery may be depleted.

DL

(c) Check the chattering prevention function.
  (1) When a switch is pressed, check that the corresponding operation occurs only once. When the switch is held down, check that the corresponding operation occurs only once and does not repeatedly activate. Lastly, when the switch is pressed at 1 second intervals, check that the corresponding operation activates once for each press of the switch.

(d) Check the automatic locking function.
  (1) When all doors are unlocked with the UNLOCK switch and none of the doors are opened or locked within 30 seconds, check that the doors are relocked automatically.

(e) Check the switch operation fail-safe function.
  (1) If the key is in the ignition key cylinder, check that the doors cannot be locked by the LOCK switch. However, this does not apply when the system is in recognition code registration mode.

(f) Check the answer-back function.
  (1) When the LOCK switch is pressed, check that the hazard warning lights flash once and all doors are locked.
  (2) When the UNLOCK switch is pressed, check that the hazard warning lights flash twice and all doors are unlocked.

DTC	B1242	Wireless Door Lock Tuner Circuit Malfunction

DESCRIPTION

The door control receiver receives signals from the transmitter and sends these signals to the main body ECU.

DTC No.	DTC Detection Condition	Suspected Area
B1242	In diagnostic mode, applicable RDA signal cannot be received within 1 second of PRG signal being output from main body ECU.	• Wire harness • Door control receiver • Main body ECU

WIRING DIAGRAM

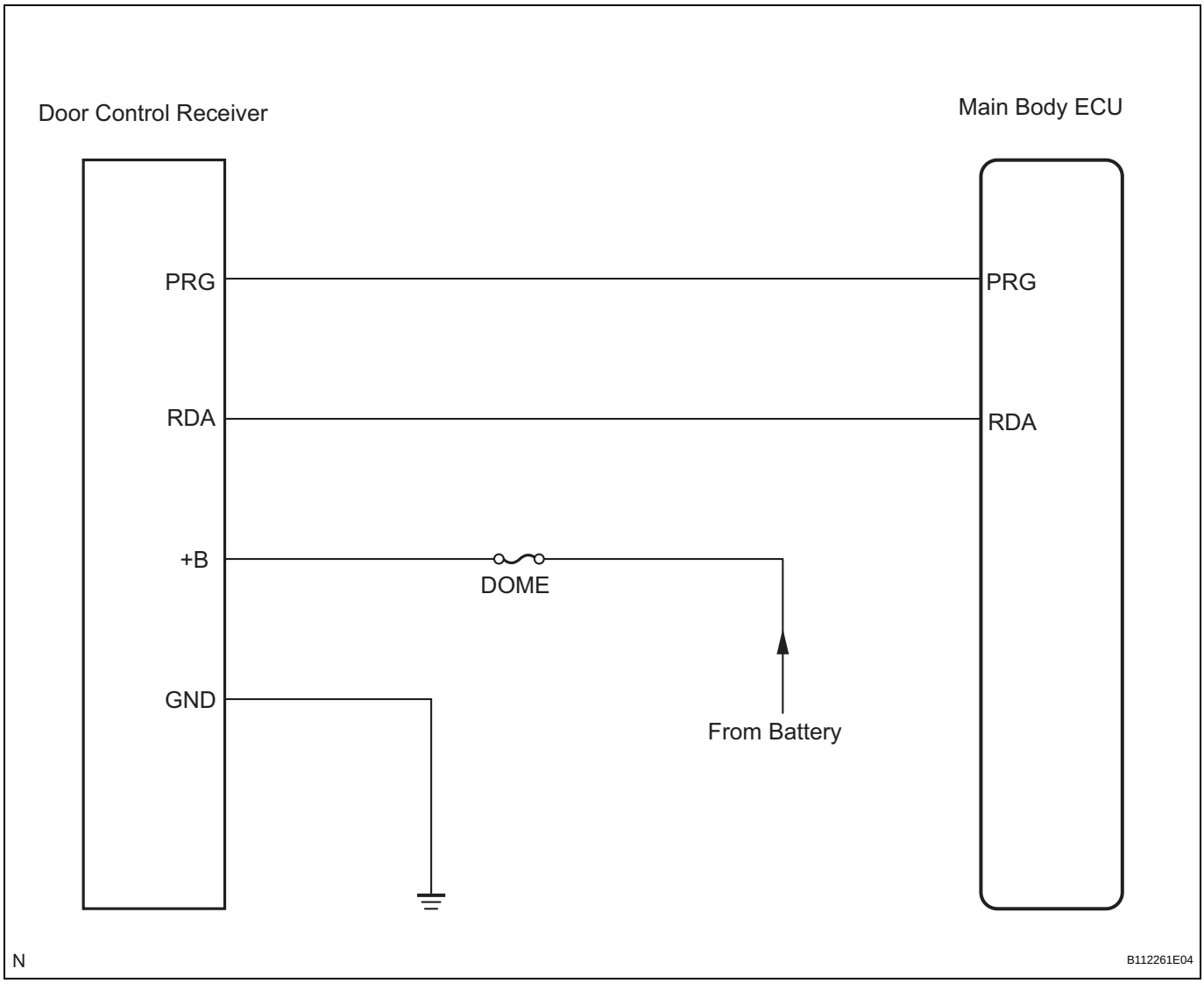

DL

INSPECTION PROCEDURE

1 CHECK HARNESS AND CONNECTOR (MAIN BODY ECU - DOOR CONTROL RECEIVER)

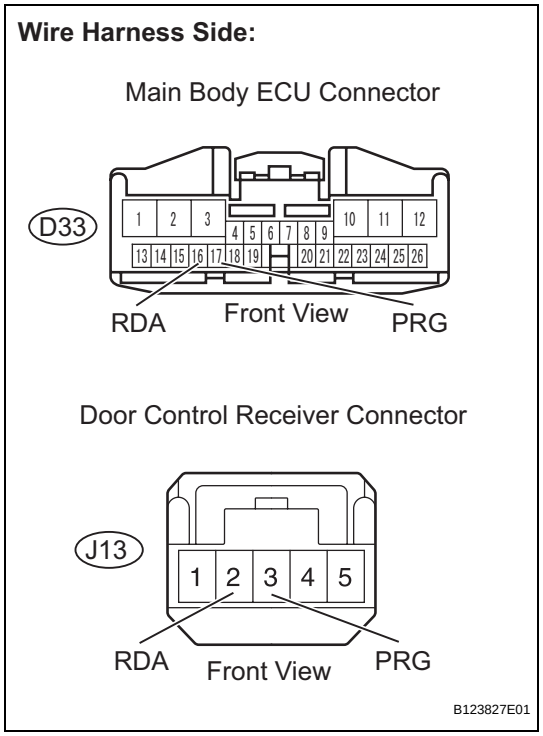

(a) Disconnect the D33 main body ECU connector.
(b) Disconnect the J13 door control receiver connector.
(c) Measure the resistance.

Standard resistance

Tester Connection	Specified Condition
D33-16 (RDA) - J13-2 (RDA)	Below 1 Ω
D33-16 (RDA) or J13-2 (RDA) - Body ground	10 kΩ or higher
D33-17 (PRG) - J13-3 (PRG)	Below 1 Ω
D33-17 (PRG) or J13-3 (PRG) - Body ground	10 kΩ or higher

(d) Reconnect the main body ECU connector.
(e) Reconnect the door control receiver connector.

NG → **REPAIR OR REPLACE HARNESS OR CONNECTOR**

OK

2 INSPECT DOOR CONTROL RECEIVER (+B TERMINAL)

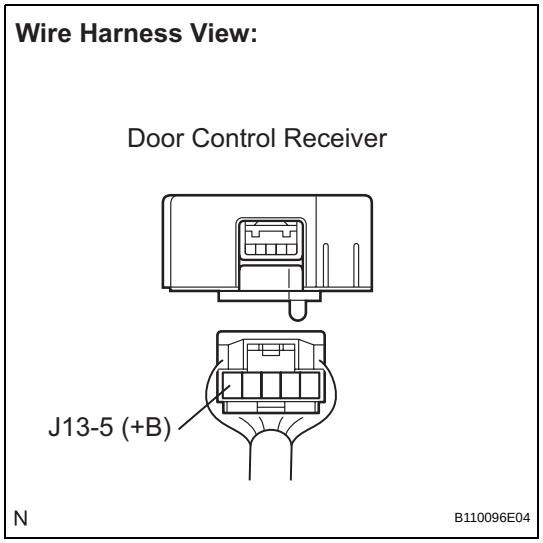

(a) Disconnect the J13 door control receiver connector.
(b) Measure the voltage.

Standard voltage

Tester Connection	Condition	Specified Condition
J13-5 (+B) - Body ground	Always	11 to 14 V

(c) Reconnect the door control receiver connector.

NG → **REPAIR OR REPLACE HARNESS OR CONNECTOR (+B CIRCUIT)**

OK

3 INSPECT DOOR CONTROL RECEIVER (GND TERMINAL)

(a) Disconnect the J13 door control receiver connector.

DL

Wire Harness View:

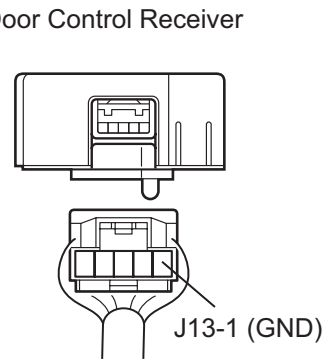

(b) Measure the resistance.
Standard resistance

Tester Connection	Specified Condition
J13-1 (GND) - Body ground	Below 1 Ω

(c) Reconnect the door control receiver connector.

NG → **REPAIR OR REPLACE HARNESS OR CONNECTOR (E CIRCUIT)**

OK

DL

4 REPLACE DOOR CONTROL RECEIVER

(a) Replace the door control receiver.
(b) Perform the REGISTRATION procedures (See page DL-97).
HINT:
If a new or normal functioning door control receiver is available, connect it and check if the wireless door lock function is normal or the DTC is output. If the alternative receiver functions normally, replace the original door control receiver.

NEXT

5 RECHECK DTC

(a) Clear the DTC.
(b) Check if the same DTC is detected.
HINT:
Reinstall the parts, such as sensors and connectors, and restore the vehicle to its previous conditions before rechecking for DTCs.

Result:

Condition	Proceed to
DTC (B1242) is output	A
DTC (B1242) is not output (When troubleshooting in accordance with DTC CHART)	B
DTC (B1242) is not output (When troubleshooting in accordance with PROBLEM SYMPTOMS TABLE)	C

B → **END**

C → **PROCEED TO NEXT CIRCUIT INSPECTION SHOWN IN PROBLEM SYMPTOMS TABLE**

A

REPLACE MAIN BODY ECU

Only Wireless Control Function is Inoperative

DESCRIPTION

The door control receiver receives signals from the transmitter and sends these signals to the main body ECU. The main body ECU then controls all doors by sending lock / unlock signals to each door, and sends hazard flasher relay signals to the turn signal flasher relay (hazard warning lights).

WIRING DIAGRAM

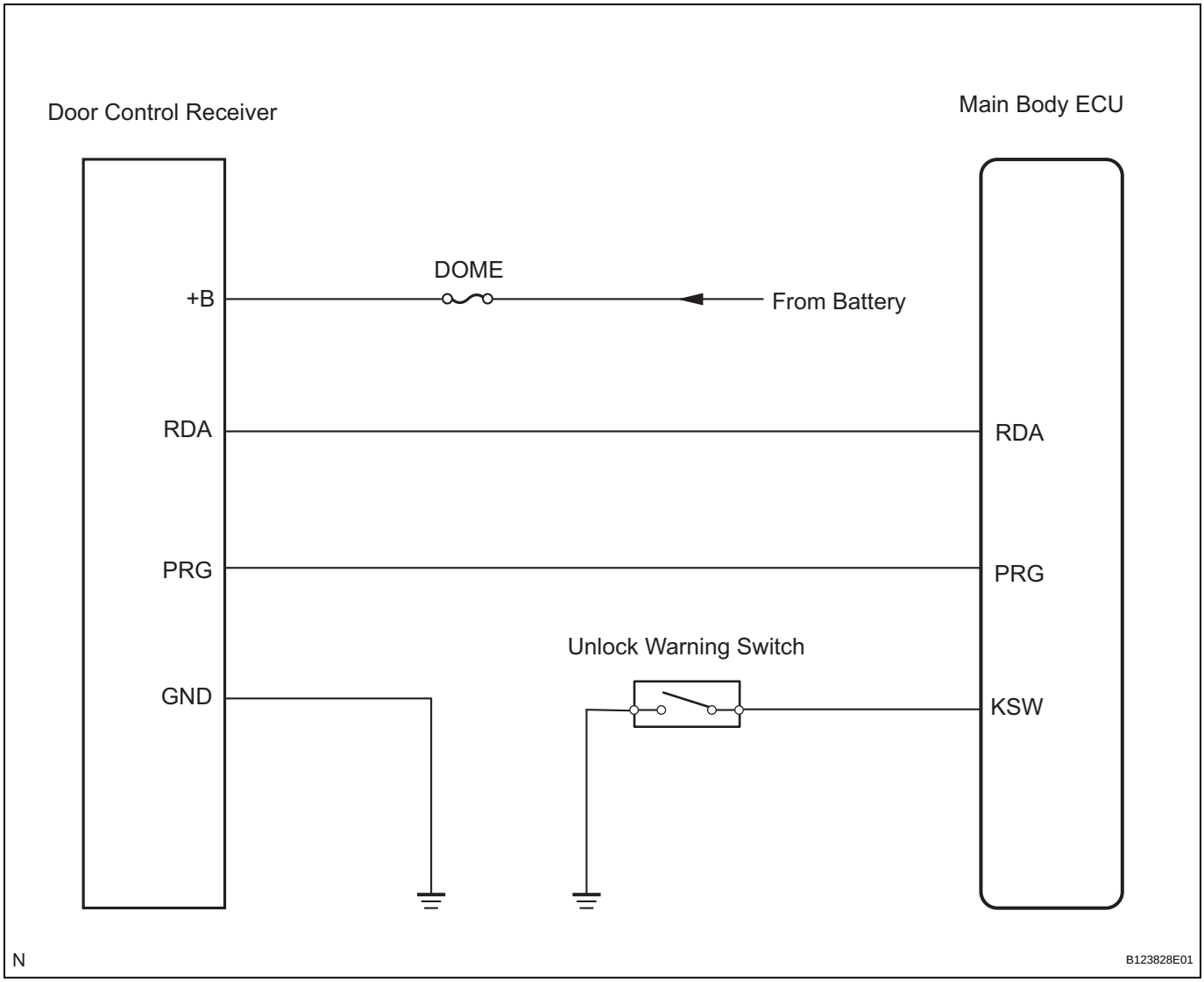

INSPECTION PROCEDURE

1	CHECK WIRELESS DOOR LOCK CONTROL FUNCTIONS

OK:

Each function of wireless door lock control system operates normally using transmitter switches (see page DL-64).

OK	END

NG

2	**CHECK TRANSMITTER LED ILLUMINATION**

(a) Check that the transmitter's LED illuminates 3 times when the switch is pressed 3 times.
OK:
Transmitter's LED illuminates 3 times when switch is pressed 3 times.

NG → **Go to step 4**

OK

3	**CHECK WIRELESS DOOR LOCK CONTROL FUNCTIONS (STANDARD OPERATION FUNCTION)**

HINT:
Use the following standard test procedure to check the transmitter again.

(a) Hold the transmitter approximately 1 m (3.28 ft.) from the driver side door outside handle. The transmitter must be held parallel to the ground and perpendicular to the side of the vehicle.
(b) Press and hold either the LOCK or UNLOCK transmitter switch for 1 second, and check that the doors are locked or unlocked, accordingly.
OK:
Doors can be locked and unlocked with transmitter switches.

NG → **Go to step 5**

OK

REPLACE DOOR CONTROL TRANSMITTER MODULE

4	**REPLACE TRANSMITTER BATTERY**

(a) After replacing the transmitter battery, check that the doors can be locked and unlocked using the transmitter switches.
OK:
Doors can be locked and unlocked with transmitter.

NG → **REPLACE DOOR CONTROL TRANSMITTER MODULE**

OK

END (TRANSMITTER BATTERY DEFECTIVE)

5	CHECK NO. 1 ROOM LIGHT ASSEMBLY

(a) Check that the No. 1 room light illumination operates normally.
OK:
No. 1 room light illumination operates normally.

NG → **GO TO LIGHTING SYSTEM**

OK

6	SWITCH TO SELF DIAGNOSTIC MODE

(a) Switch to self-diagnostic mode by operating the ignition key cylinder.
(1) Make sure the vehicle is in its initial condition. Then insert the key into the ignition key cylinder and remove it.
(2) Within 5 seconds of removing the key, insert the key into the ignition key cylinder (ignition switch OFF). Then turn the ignition switch ON and OFF.
(3) Within 30 seconds of turning the ignition switch OFF, perform the following operation 9 times: turn the ignition switch ON and OFF.
NOTICE:
If the system cannot enter self-diagnostic mode, the system returns to normal mode.
HINT:
- Turning the ignition switch ON after the above operations have been completed ends self-diagnostic mode.
- Do not lock or unlock doors during self-diagnostic mode.

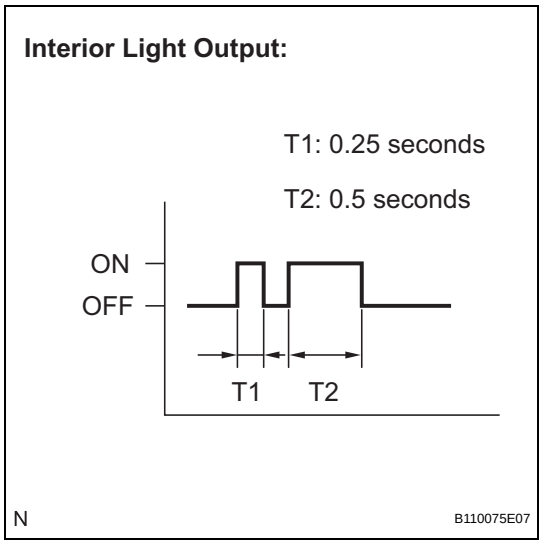

(b) Check that the system has switched to self-diagnostic mode by checking the No. 1 room light assembly flash pattern.
OK:
Flash pattern is same as illustration on left.

NG → **Go to step 11**

OK

DL

7	CHECK BY SELF DIAGNOSTIC MODE

(a) Inspect the diagnosis outputs when the door control transmitter switch is held down. The diagnosis outputs can be checked by the flash patterns of the No. 1 room light assembly.

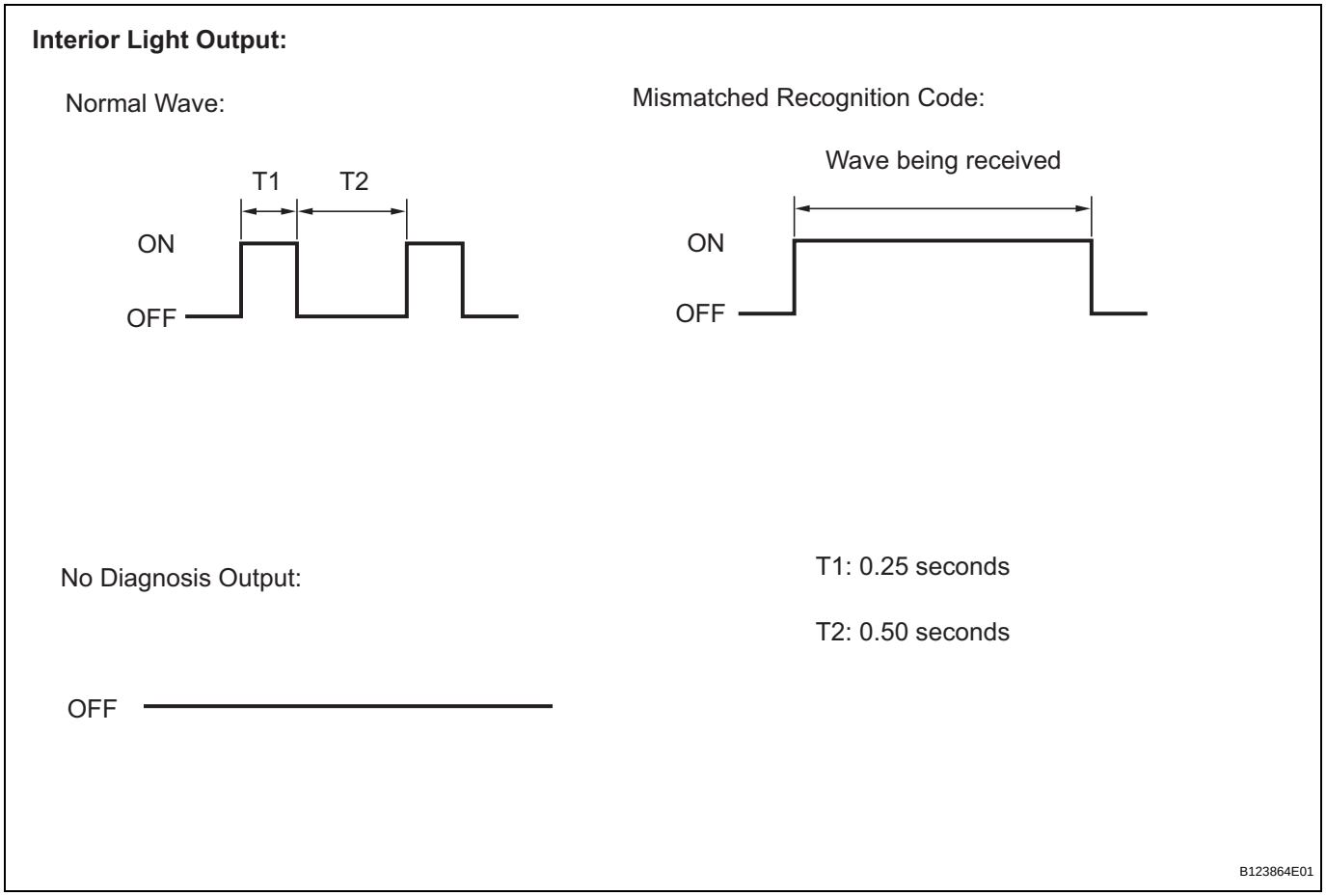

Result

Result	Proceed to
Unmatching recognition code is output	A
Normal waves (light flash patterns) for LOCK and UNLOCK switches are output	B
No diagnosis outputs	C

B → **REPLACE MAIN BODY ECU**

C → **Go to step 9**

A

8 REGISTER RECOGNITION CODE

(a) Check that the system can be switched to rewrite mode or add mode, and that a recognition code can be registered.
OK:
Recognition code can be registered.

NG → **Go to step 15**

OK

END

9 CHECK RESPONSE OF DOOR CONTROL RECEIVER

(a) When a new or normally functioning door lock control transmitter switch for the same type vehicle is held down, check that an unmatching recognition code is output.
OK:
Unmatching recognition code is output.

OK → **REPLACE DOOR CONTROL TRANSMITTER MODULE**

NG

10 REPLACE DOOR CONTROL RECEIVER

(a) After replacing the door control receiver, check that the doors can be locked and unlocked by using the transmitter LOCK and UNLOCK switches.
OK:
Doors can be locked and unlocked with transmitter.

NG → **REPLACE MAIN BODY ECU**

OK

END

11 CONFIRM PROCEDURES TO ENTER SELF DIAGNOSTIC MODE

Result:

Result	Proceed to
Self-diagnostic mode entry successful	A
Self-diagnostic mode entry unsuccessful	B

B → **Go to step 6**

A

12 INSPECT UNLOCK WARNING SWITCH ASSEMBLY

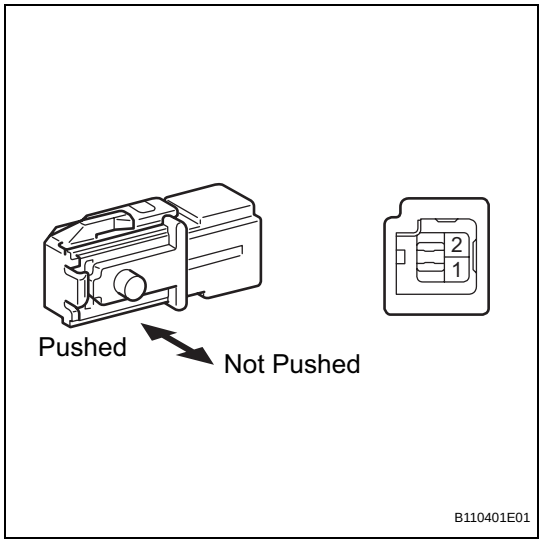

(a) Remove the unlock warning switch.
(b) Measure the resistance.
Standard resistance

Tester Connection	Condition	Specified Condition
1 - 2	Not pushed	10 kΩ or higher
	Pushed	Below 1 Ω

NG → **REPLACE UNLOCK WARNING SWITCH ASSEMBLY**

OK

DL

13 CHECK HARNESS AND CONNECTOR (DOOR CONTROL RECEIVER - MAIN BODY ECU)

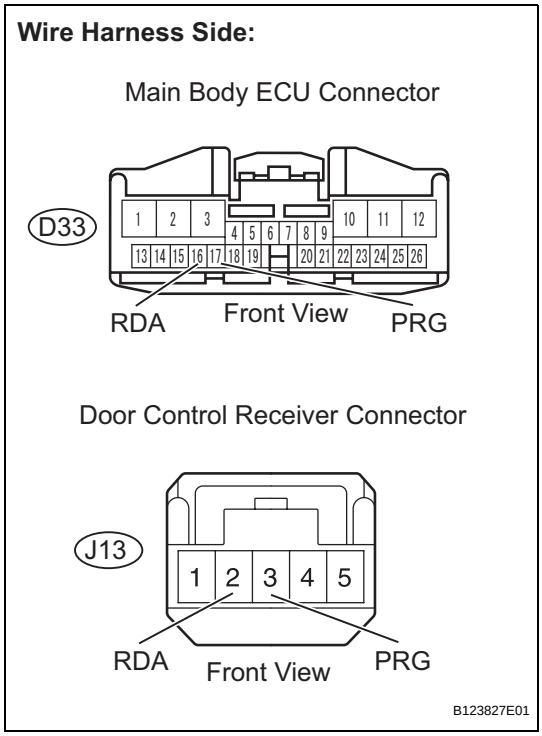

(a) Disconnect the D33 main body ECU connector.
(b) Disconnect the J13 door control receiver connector.
(c) Measure the resistance.
Standard resistance

Tester Connection	Specified Condition
D33-16 (RDA) - J13-2 (RDA)	Below 1 Ω
D33-16 (RDA) - Body ground	10 kΩ or higher
D33-17 (PRG) - J13-3 (PRG)	Below 1 Ω
D33-17 (PRG) - Body ground	10 kΩ or higher

(d) Reconnect the main body ECU connector.
(e) Reconnect the door control receiver connector.

NG → **REPAIR OR REPLACE HARNESS OR CONNECTOR**

OK

14 CHECK DOOR CONTROL RECEIVER (OUTPUT)

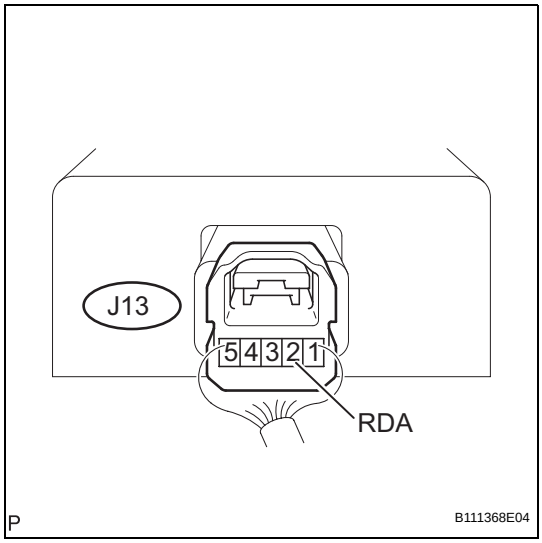

(a) Measure the voltage of the connector.
Standard voltage

Tester Connection	Condition	Specified Condition
J13-2 (RDA) - Body ground	Transmitter switch ON→OFF (No key in ignition key cylinder, all doors closed)	Below 1 V→ 6 to 7 V→ Below 1 V

OK → **REPLACE MAIN BODY ECU**

NG

15 REPLACE DOOR CONTROL TRANSMITTER MODULE

(a) Check that the doors can be locked and unlocked by using the transmitter LOCK and UNLOCK switches.

OK:
Doors can be locked and unlocked with transmitter.

NG → **REPLACE DOOR CONTROL RECEIVER**

OK

END (DOOR CONTROL TRANSMITTER MODULE DEFECTIVE)

No Answer-Back

DESCRIPTION

In this case, wireless control functions are normal but the hazard warning light answer-back function does not operate (main body ECU turn signal flasher relay output may be malfunctioning).

WIRING DIAGRAM

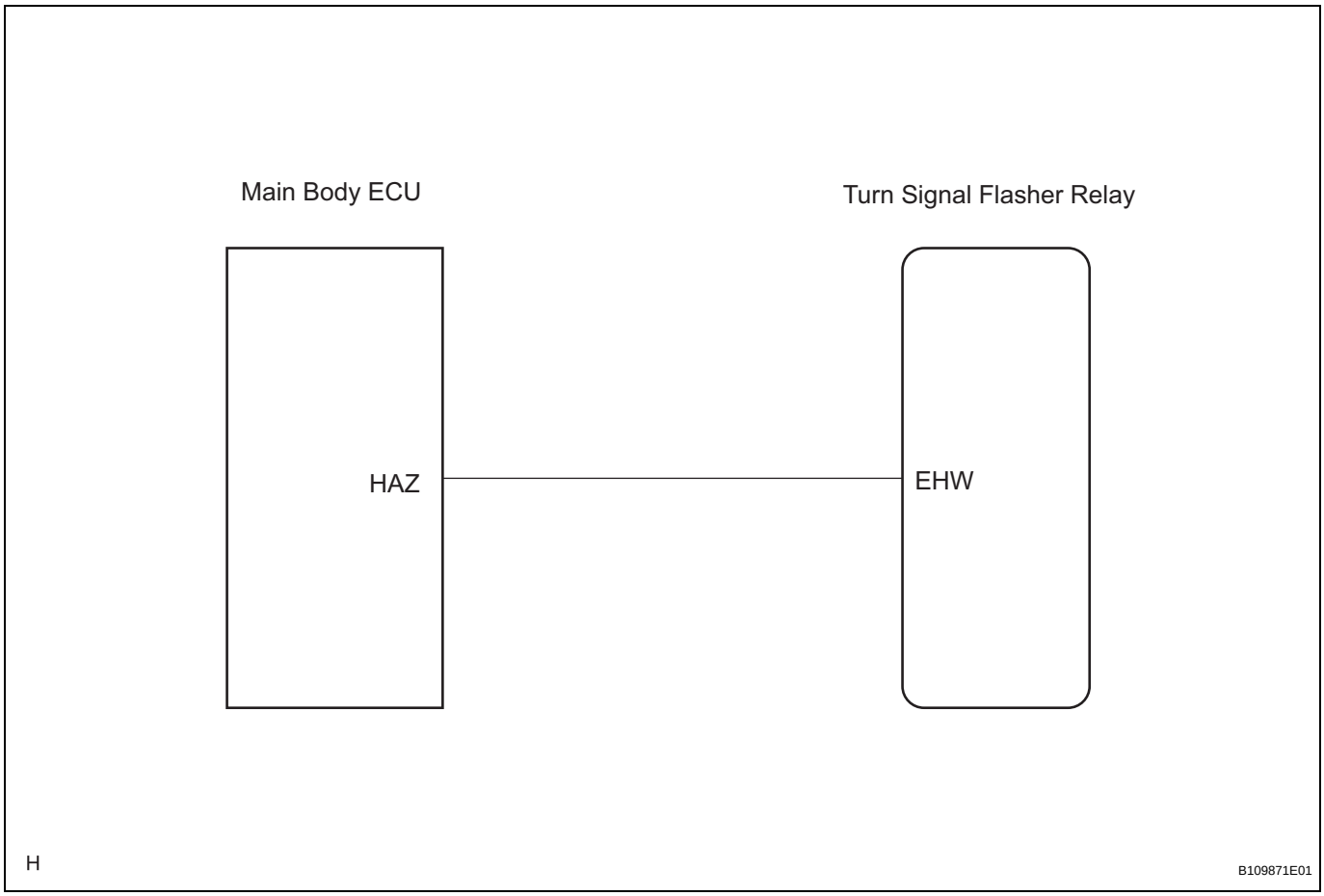

INSPECTION PROCEDURE

1	CHECK WIRELESS DOOR LOCK CONTROL FUNCTIONS

(a) Check the wireless door lock functions by operating the transmitter switches.

Result

Result	Proceed to
Wireless door lock functions are normal but hazard warning light answer-back does not occur	A
Wireless door lock functions are abnormal	B

B → GO TO PROBLEM SYMPTOMS TABLE

A

2	**CHECK HAZARD WARNING LIGHTS**

(a) Check that the hazard warning lights flash when the hazard warning signal switch is pressed.
OK:
Hazard warning lights flash when hazard warning signal switch is pressed.

NG → **GO TO LIGHTING SYSTEM**

OK ↓

REPLACE MAIN BODY ECU

KEY REMINDER WARNING SYSTEM

PARTS LOCATION

HATCHBACK:

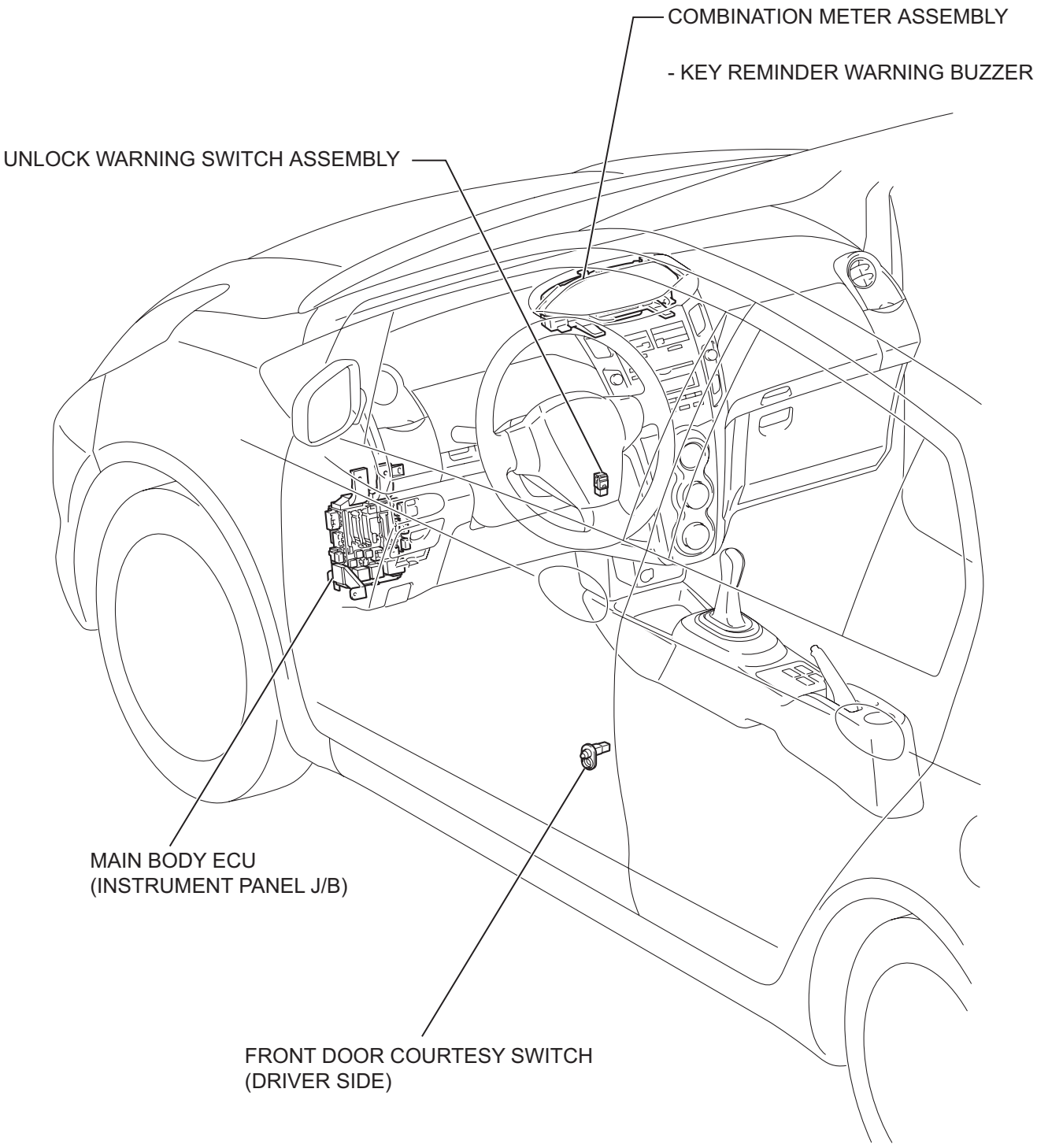

Y

B117137E04

SEDAN:

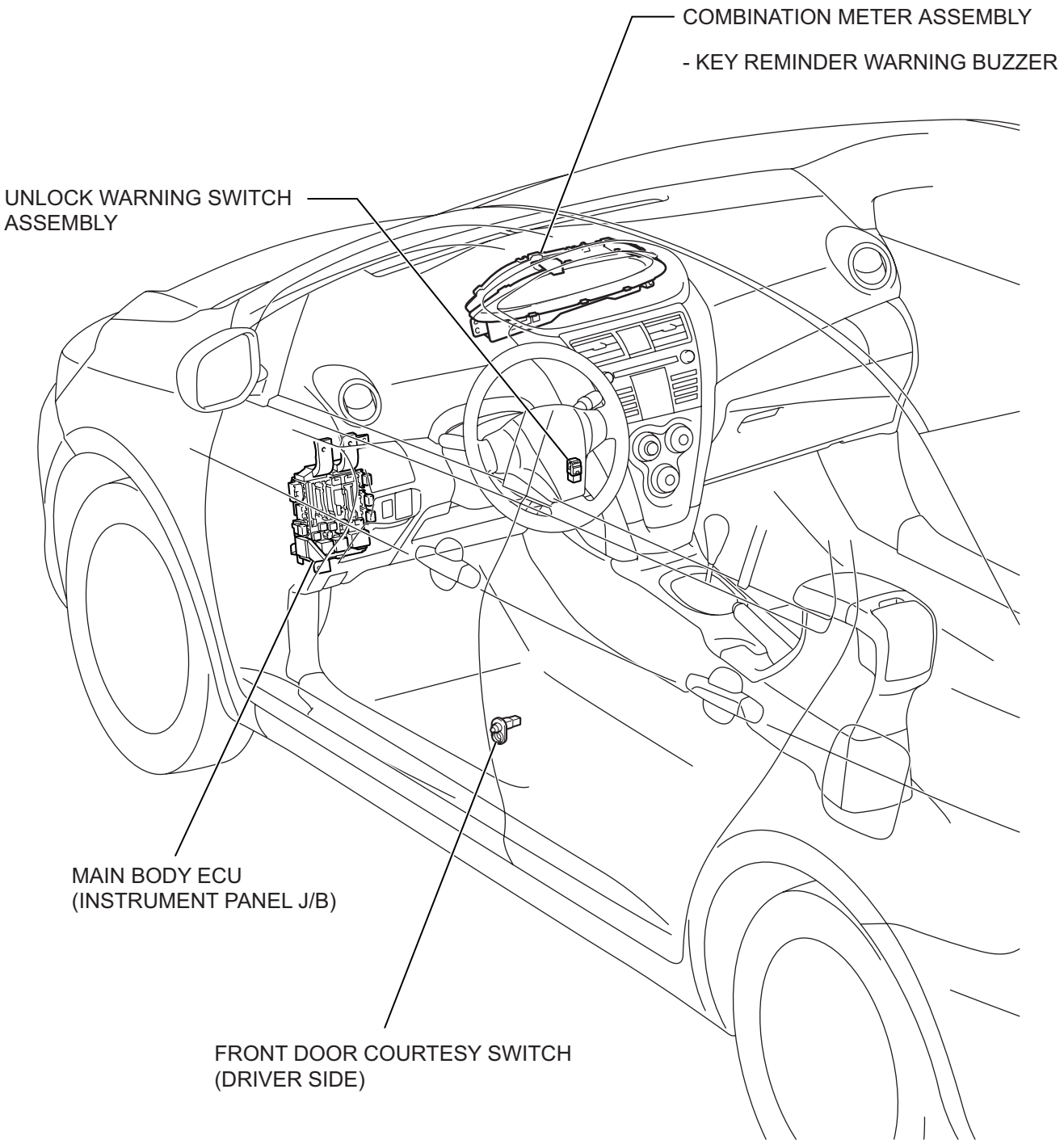

B142256E01

SYSTEM DIAGRAM

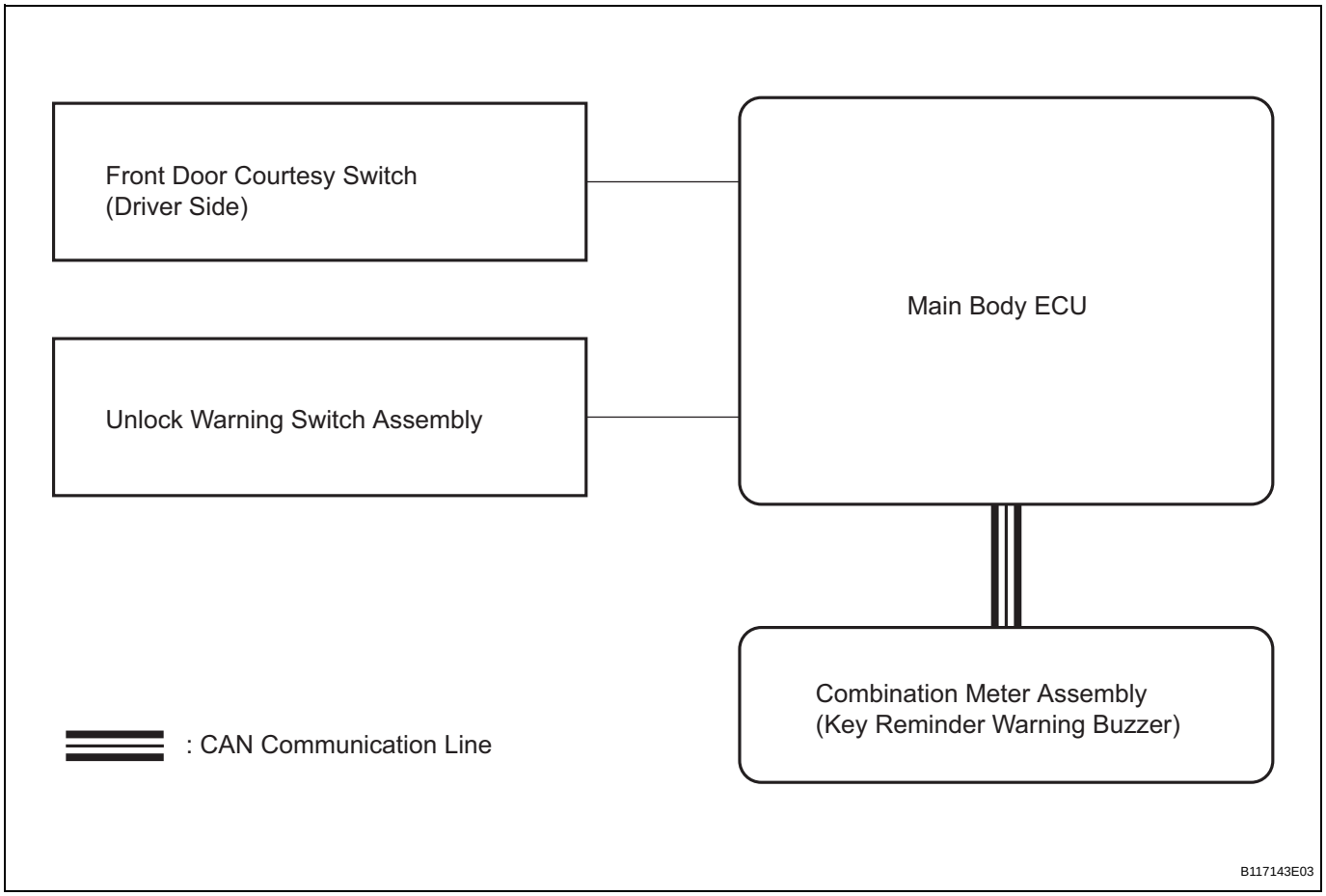

SYSTEM DESCRIPTION

1. KEY REMINDER WARNING SYSTEM DESCRIPTION

(a) When the driver side door is opened with the ignition key in the ACC or LOCK position, this system causes the key reminder warning buzzer to sound in order to warn the driver that the ignition key has not been removed.

HOW TO PROCEED WITH TROUBLESHOOTING

HINT:
- Use these procedures to troubleshoot the key reminder warning system.
- The intelligent tester should be used in steps 3 and 5.

1 VEHICLE BROUGHT TO WORKSHOP

NEXT

2 INSPECT BATTERY VOLTAGE

Standard voltage:
11 to 14 V

HINT:
If the voltage is below 11 V, recharge or replace the battery before proceeding.

NEXT

3 INSPECT COMMUNICATION FUNCTION OF CAN COMMUNICATION SYSTEM

(a) Use the intelligent tester with CAN VIM to check if the CAN communication system is functioning normally.
Result:

Result	Proceed to
DTC is not output	A
DTC is output	B

B → **GO TO CAN COMMUNICATION SYSTEM**

A

4 PROBLEM SYMPTOMS TABLE

Result:

Result	Proceed to
Fault is not listed on problem symptoms table	A
Fault is listed on problem symptoms table	B

B → **Go to step 6**

A

5 OVERALL ANALYSIS AND TROUBLESHOOTING

(a) Operation Check
(See page DL-85)

DL

(b) Terminals of ECU
(See page DL-86)
(c) Data list/Active test
(See page DL-88)

NEXT

6	**REPAIR OR REPLACE**

NEXT

7	**CONFIRMATION TEST**

NEXT

END

OPERATION CHECK

1. REMOVE CHECK FUNCTION

(a) Check that the key reminder warning buzzer sounds.

(1) With the driver side door closed, insert the key into the ignition key cylinder and then turn the key to LOCK or ACC.

(2) Check that the buzzer sounds intermittently when the driver side door is open.

(b) Check that the key reminder warning buzzer stops.

(1) Check that the buzzer stops sounding if any of the following operations is performed while the buzzer is sounding:

- Close the driver side door (front door courtesy switch is off).
- Turn the ignition switch ON.
- Remove the key from the ignition key cylinder.

CUSTOMIZE PARAMETERS

HINT:
The following item can be customized.

Meter ECU:

Display (Item)	Default	Function	Setting
KEY REMND SOUND	NORMAL	Changes key reminder warning buzzer interval	FAST /NORMAL / SLOW

NOTICE:

- **When the customer requests the modification of an item, first make sure that the function can be customized.**
- **Be sure to record the current settings before customizing.**
- **When troubleshooting a function, first make sure that the function is not set to OFF.**

PROBLEM SYMPTOMS TABLE

HINT:
Use the table below to help determine the causes of the problem symptom. The potential causes of the symptoms are listed in order of probability in the "Suspected Area" column of the table. Check each symptom by checking the suspected areas in the order they are listed. Replace parts as necessary.

Key reminder warning system

Symptom	Suspected area	See page
Key reminder buzzer does not sound	Unlock warning switch assembly	DL-116
	Front door courtesy switch (Driver side) for hatchback	LI-182
	Front door courtesy switch (Driver side) for sedan	LI-182
	Combination meter assembly (Key reminder warning buzzer)	DL-86
	Main body ECU	DL-86
	CAN communication system	CA-38
	Wire harness	-

TERMINALS OF ECU

1. CHECK COMBINATION METER ASSEMBLY

(a) Using the tester probes, touch the terminals from the back of the vehicle wire harness connectors, and measure the voltages and resistances of each terminal.

Combination Meter Assembly:

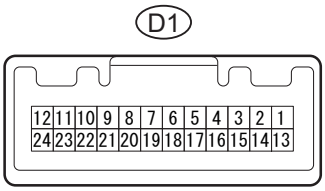

B142255E01

DL

Standard:

Symbols (Terminal No.)	Wiring Color	Terminal Description	Condition	Specified Condition
IG2 (D1-1) - Body ground	B - Body ground	Ignition switch signal	Ignition switch OFF → ON	Below 1 V → 11 to 14 V
ECUB (D1-2) - Body ground	L - Body ground	Battery	Always	11 to 14 V
CANH (D1-20) - Body ground	G - Body ground	CAN communication line	Ignition switch ON	Pulse generation
CANL (D1-21) - Body ground	W - Body ground	CAN communication line	Ignition switch ON	Pulse generation
ET (D1-24) - Body ground	BR - Body ground	Ground	Always	Below 1 Ω

2. CHECK MAIN BODY ECU

(a) Using the tester probes, touch the terminals from the back of the vehicle wire harness connectors, and measure the voltages and resistances of each terminal.

Vehicle Rear Side:

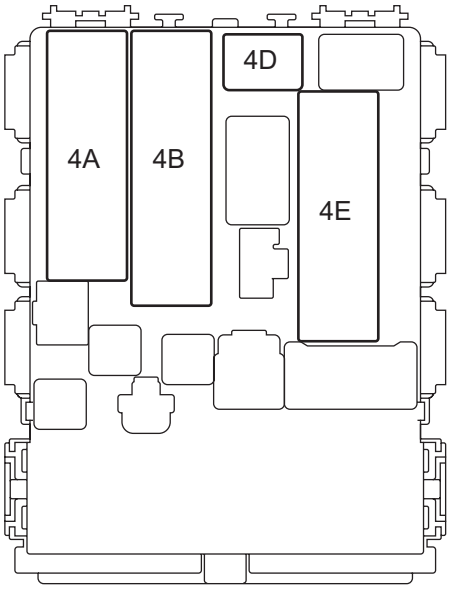

Vehicle Front Side:

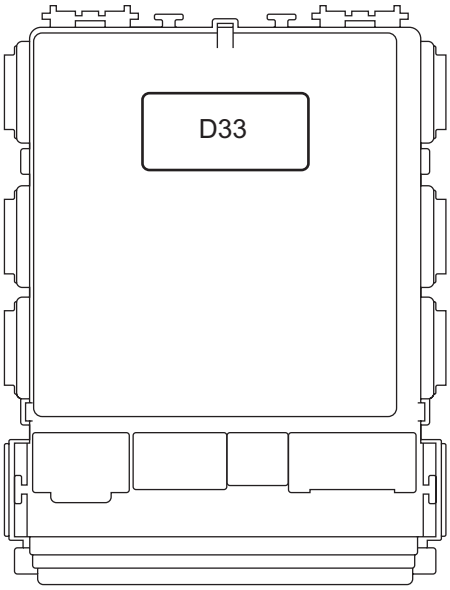

4A

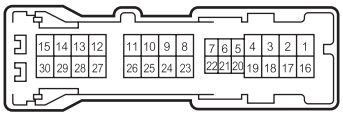

D33

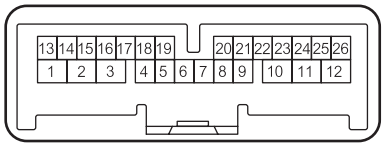

4B

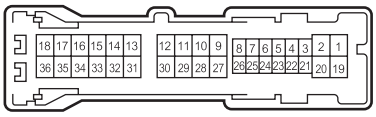

4D

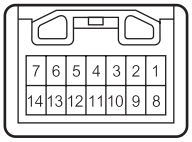

4E

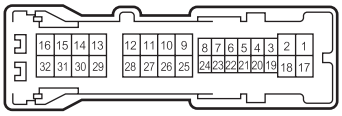

B117140E02

DL

Standard:

Symbols (Terminal No.)	Wiring Color	Terminal Description	Condition	Specified Condition
KSW (4D-7) - Body ground	Y - Body ground	Key unlock warning switch input	Key inserted → Key removed from ignition key cylinder	Below 1 V → 11 to 14 V
GND1 (4E-17) - Body ground	W-B - Body ground	Ground	Always	Below 1 Ω
BECU (4B-30) - Body ground	L - Body ground	Battery	Always	11 to 14 V
DCTY (4A-21) - Body ground	R - Body ground	Driver door courtesy switch input	Driver door closed → open	11 to 14 V → Below 1 V
CANL (D33-22) - Body ground	W - Body ground	CAN communication line	Ignition switch ON	Pulse generation
CANH (D33-23) - Body ground	R - Body ground	CAN communication line	Ignition switch ON	Pulse generation

DATA LIST / ACTIVE TEST

1. READ DATA LIST

HINT:
Using the intelligent tester's DATA LIST allows switch, actuator and other item values to be read without removing any parts. Reading the DATA LIST early in troubleshooting is one way to save time.

(a) Connect the intelligent tester with CAN VIM to the DLC3.
(b) Turn the ignition switch ON.
(c) Read the DATA LIST.

Main Body ECU:

Item	Measurement Item / Display (Range)	Normal Condition	Diagnostic Note
KEY UNLK WRN SW	Unlock warning switch signal /ON or OFF	ON: Key is in ignition key cylinder OFF: No key is in ignition key cylinder	-
D DOR CTY SW	Driver side door courtesy switch signal /ON or OFF	ON: Driver side door is open OFF: Driver side door is closed	-

Key Reminder Buzzer does not Sound

DESCRIPTION

The key reminder warning buzzer sounds when the driver side door is opened while the ignition switch is in the LOCK or ACC positions. The key reminder warning buzzer is activated when the main body ECU sends a key switch signal and driver side courtesy switch signal to the combination meter.

WIRING DIAGRAM

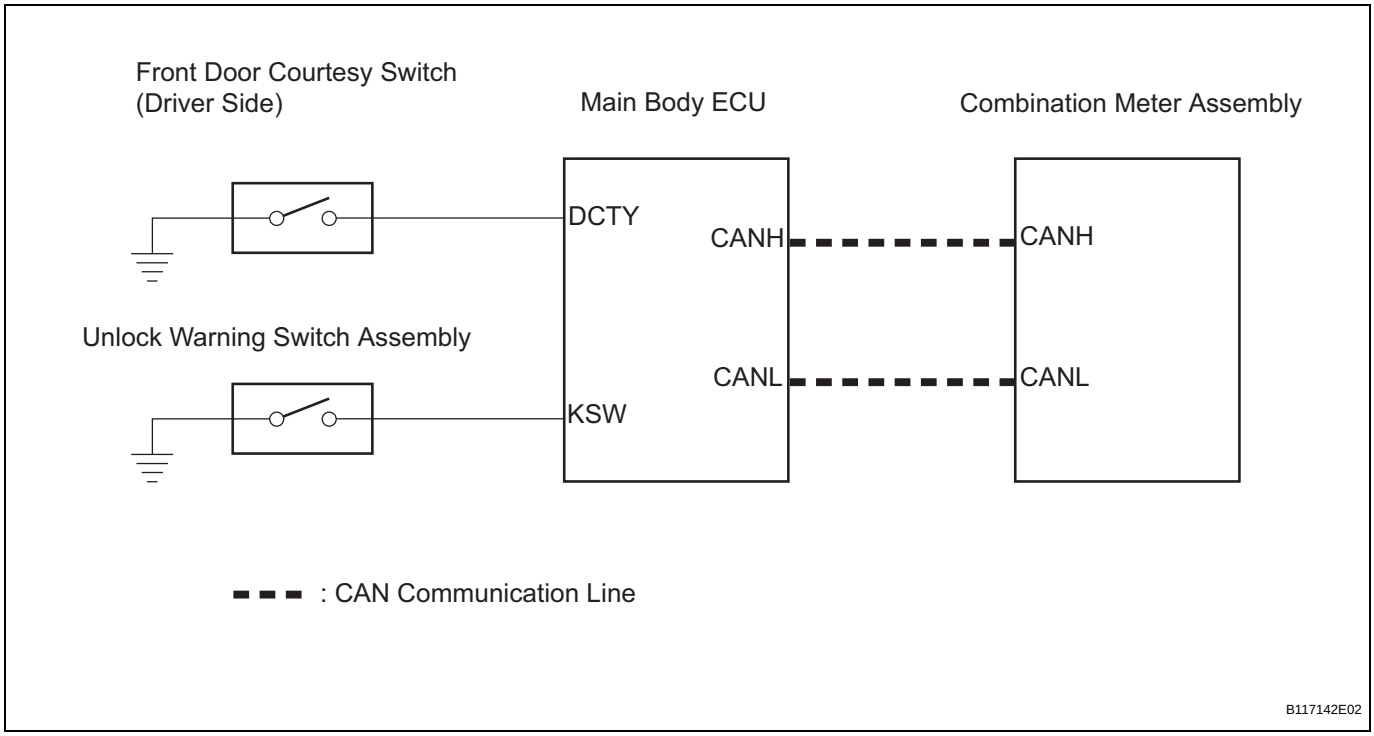

INSPECTION PROCEDURE

HINT:
Since the key reminder warning system has functions that use CAN communication, firstly confirm that there is no malfunction in the communication system by inspecting the CAN communication functions in accordance with How to Proceed with Troubleshooting. Then, conduct the following troubleshooting procedure.

1	READ VALUE USING INTELLIGENT TESTER (KEY UNLOCK WARNING SW)

(a) Check the DATA LIST to ensure proper operation of the door unlock warning switch.

Main Body ECU

Item	Measurement Item / Display (Range)	Normal Condition	Diagnostic Note
KEY UNLK WRN SW	Unlock warning switch signal / ON or OFF	ON: Key is in ignition key cylinder OFF: No key is in ignition key cylinder	-

OK:

The display is as specified in the normal condition column.

NG → Go to step 4

OK

2 READ VALUE USING INTELLIGENT TESTER (D DOOR COURTESY SW)

(a) Check the DATA LIST to ensure proper operation of the front door courtesy light switch.

Main Body ECU

Item	Measurement Item / Display (Range)	Normal Condition	Diagnostic Note
D DOR CTY SW	Driver side door courtesy switch signal / ON or OFF	ON: Driver side door is open OFF: Driver side door is closed	-

OK:
The display is as specified in the normal condition column.

NG → Go to step 6

OK

3 CHECK COMBINATION METER ASSEMBLY (WARNING BUZZER)

(a) Temporarily replace the combination meter assembly with a new or normally functioning one.
(b) Check the key reminder warning system function. (See page DL-85)
OK:
The key reminder warning system functions properly.

NG → REPLACE MAIN BODY ECU

OK

END (COMBINATION METER ASSEMBLY IS FAULTY)

4 INSPECT UNLOCK WARNING SWITCH ASSEMBLY

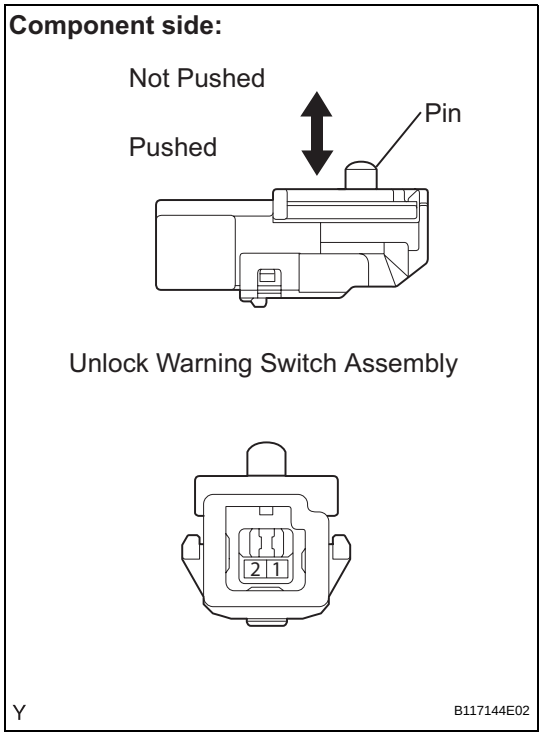

(a) Remove the unlock warning switch assembly.
(b) Measure the resistance.
Standard resistance

Tester Connection	Condition	Specified Condition
1 - 2	Not pushed	10 kΩor higher
1 - 2	Pushed	Below 1 Ω

(c) Reinstall the unlock warning switch assembly.

NG → **REPLACE UNLOCK WARNING SWITCH ASSEMBLY**

OK

5 CHECK WIRE HARNESS AND CONNECTOR (UNLOCK WARNING SWITCH ASSEMBLY - MAIN BODY ECU)

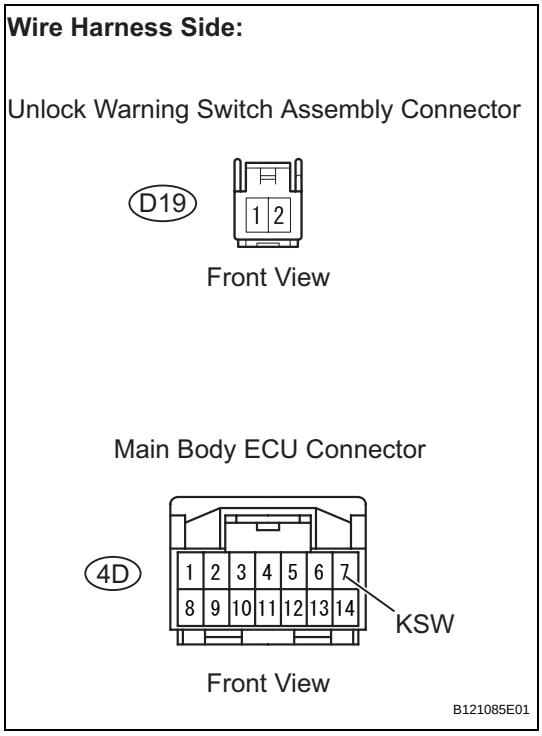

(a) Disconnect the D19 unlock warning switch connector.
(b) Disconnect the 4D main body ECU connector.
(c) Measure the resistance between the wire harness side connectors.
Standard resistance

Tester Connection	Specified Condition
D19-1 - 4D-7 (KSW)	Below 1 Ω
D19-1 or 4D-7 (KSW) - Body ground	10 kΩor higher
D19-2 - Body ground	Below 1 Ω

(d) Reconnect the unlock warning switch and the main body ECU connectors.

NG → **REPAIR OR REPLACE HARNESS OR CONNECTOR**

OK

REPLACE MAIN BODY ECU

6 INSPECT FRONT DOOR COURTESY SWITCH (DRIVER SIDE)

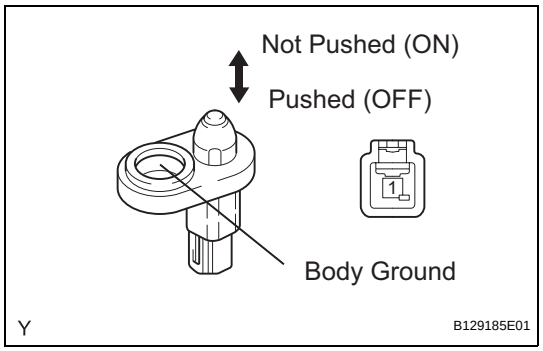

(a) Remove the front door courtesy switch (driver side).
(b) Measure the resistance of the switch.
Standard resistance

Tester Connection	Condition	Specified Condition
1 - Body ground	Not pushed (ON)	Below 1 Ω
1 - Body ground	Pushed (OFF)	10 kΩor higher

(c) Reinstall the front door courtesy switch.

NG → **REPLACE FRONT DOOR COURTESY SWITCH (DRIVER SIDE)**

OK

DL

7	CHECK HARNESS AND CONNECTOR (FRONT DOOR COURTESY SWITCH - MAIN BODY ECU)

Wire Harness Side:

Front Door Courtesy Light Switch Connector (Driver Side)

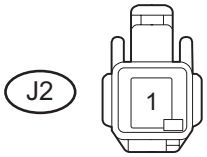

Front View

Main Body ECU Connector

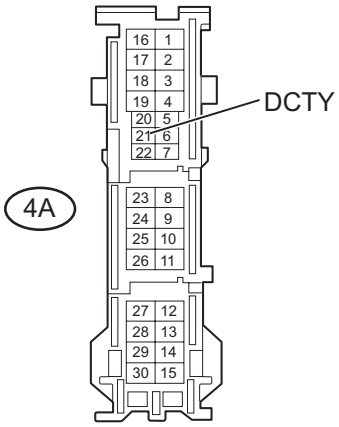

Front View

Y

B112021E02

(a) Disconnect the J2 front door courtesy switch connector.
(b) Disconnect the 4A main body ECU connector.
(c) Measure the resistance of the wire harness side connectors.

Standard resistance

Tester Connection	Specified Condition
J2-1 - 4A-21 (DCTY)	Below 1 Ω
J2-1 or 4A-21 (DCTY) - Body ground	10 kΩor higher

(d) Reconnect the front door courtesy switch and main body ECU connectors.

NG → **REPAIR OR REPLACE HARNESS OR CONNECTOR**

OK

REPLACE MAIN BODY ECU

DL

TRANSMITTER BATTERY

COMPONENTS

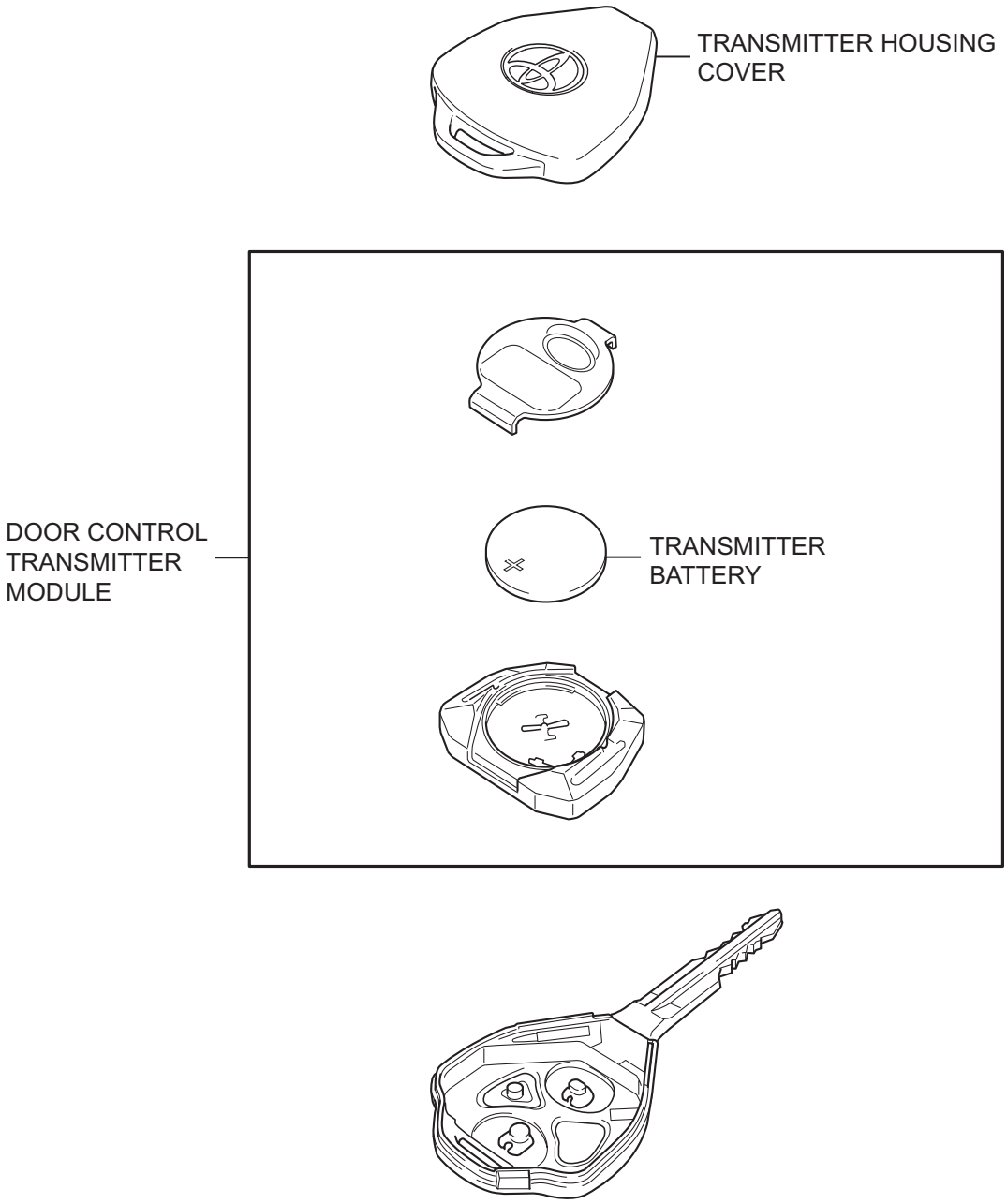

Y

B107917E01

REMOVAL

1. REMOVE TRANSMITTER BATTERY

(a) Remove the transmitter battery.

(1) Using a screwdriver with its tip wrapped in protective tape, pry apart the transmitter housing cover.

NOTICE:

Do not use excessive force when prying apart the housing cover.

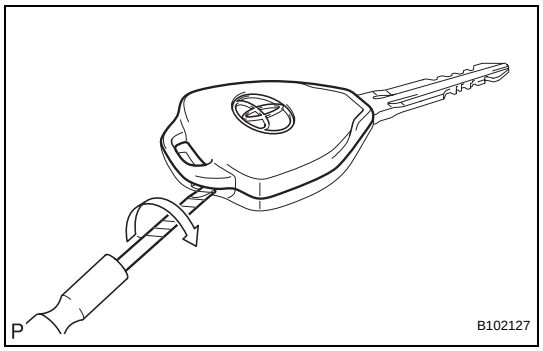

(2) Remove the door control transmitter module from the transmitter housing case.

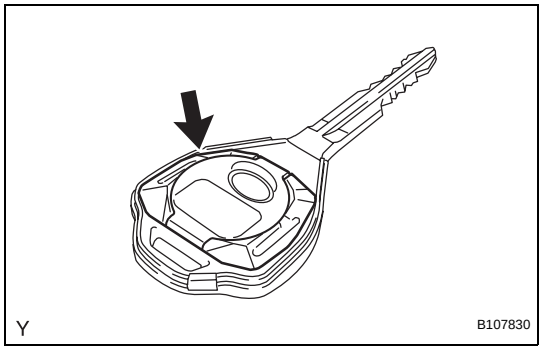

(3) Disengage the hook and remove the transmitter battery cover.

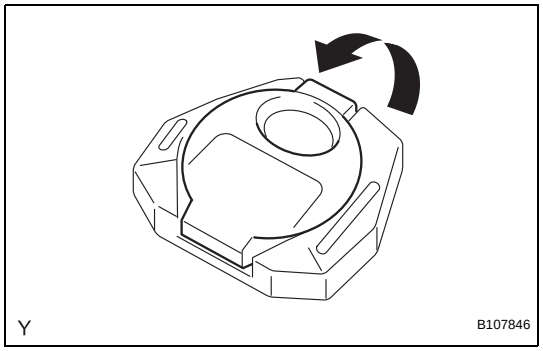

(4) Remove the battery (lithium battery: CR2016).

NOTICE:

- **Do not push the terminals with your finger.**
- **Do not use excessive force when prying up the battery (lithium battery: CR2016) as this may damage the terminals.**
- **Do not touch the battery with wet hands. Water may cause rust.**
- **Do not touch or move any components inside the transmitter as this may interfere with its proper operation.**

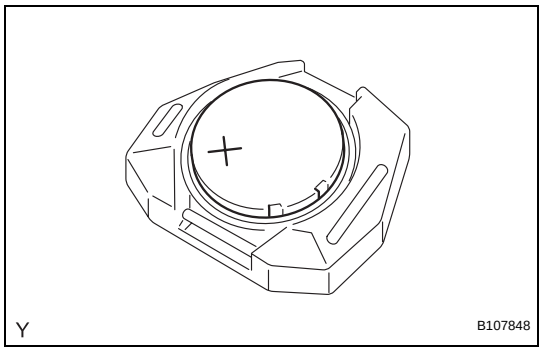

INSTALLATION

1. INSTALL TRANSMITTER BATTERY

(a) Install the transmitter battery.

(1) Install a battery (lithium battery: CR2016) with the positive (+) side up, as shown in the illustration.

NOTICE:

- **Make sure that the positive (+) side and the negative (-) side of the transmitter battery are correctly matched up with the transmitter terminals.**
- **Do not bend the transmitter battery electrode during insertion.**
- **Keep the transmitter cover interior free of dust and oil.**

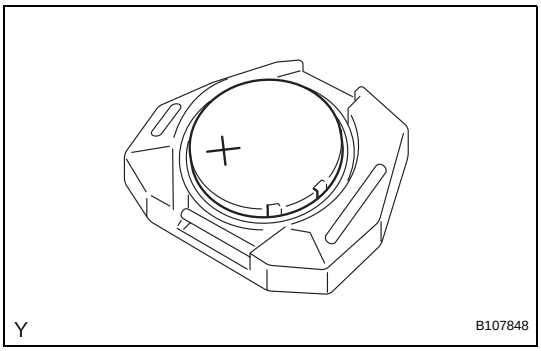

(2) Install the cover securely.

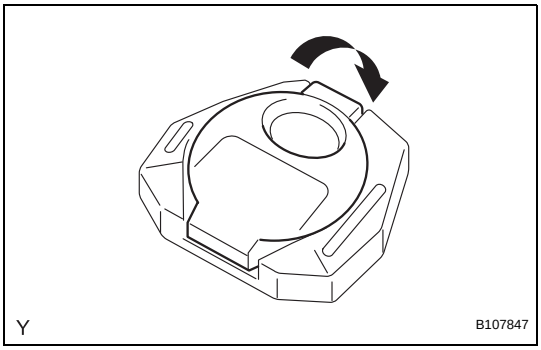

(3) Install the door control transmitter module into the transmitter housing case.

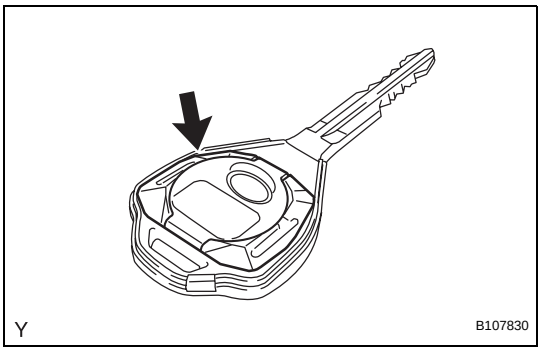

(4) Install the transmitter housing cover onto the transmitter housing case securely.

(5) After installation, press any of the transmitter switches. Check that the LED illuminates.

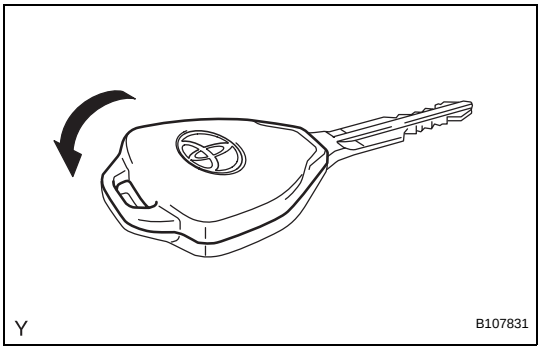

DOOR CONTROL TRANSMITTER MODULE

COMPONENTS

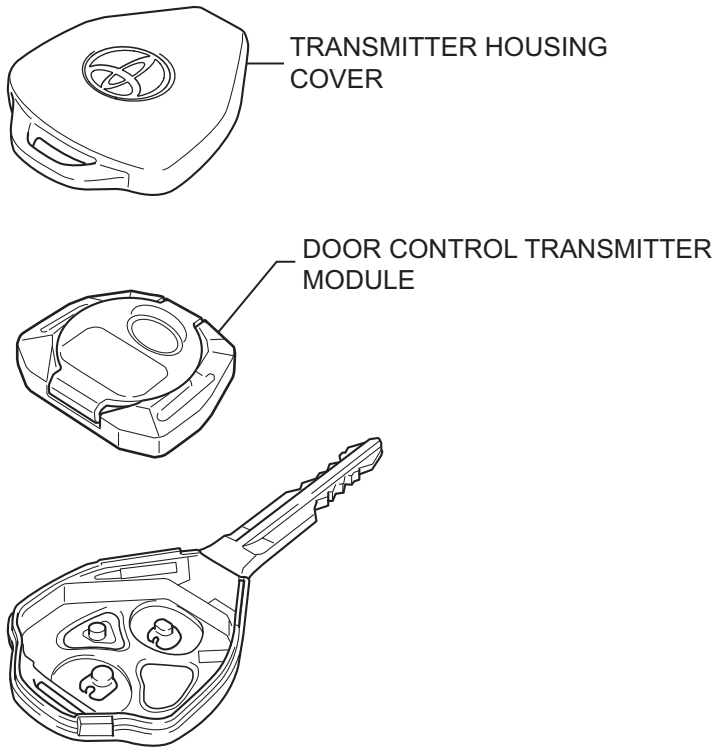

Y

B107918E01

REGISTRATION

1. REGISTER RECOGNITION CODES

HINT:

- Recognition code registration is necessary when the door control transmitter or the door control receiver is replaced with a new one.
- Add Mode is used to register new recognition codes while retaining the previously registered codes. This mode is used when new transmitters are added. If the number of registered codes exceeds 4, the previously registered codes will be erased in order, starting from the first registered code.
- Rewrite Mode is used to erase all the previously registered recognition codes in order to register new recognition codes. This mode is used when the transmitter or the door control receiver is replaced with a new one.
- Confirmation Mode is used to confirm how many recognition codes have already been registered before any additional recognition codes are registered.
- Prohibition Mode is used to erase all the registered codes and disable the wireless door lock function. This mode is used when the transmitters are lost.
- The registration procedure described on the following pages must be performed in order.

(a) Check that the following conditions are met.
- No key in the ignition key cylinder.
- Only driver side door is open.

(b) Insert the key into the ignition key cylinder, and remove it twice within 5 seconds.

(c) Perform the following operations within 40 seconds.
(1) Close and open the driver side door twice.
(2) Insert the key into the ignition key cylinder, then remove it.

(d) Perform the following operations within 40 seconds.
(1) Close and open the driver side door twice.
(2) Insert the key into the ignition key cylinder and close all doors.

(e) Perform the following operations within 40 seconds.

(1) Turn the ignition switch from LOCK to ON and back to LOCK 1 to 5 times at approximately 1 second intervals to select a mode (see the table below).

Number of ON-LOCK operations of ignition switch:

Add Mode ON-LOCK operation: Once

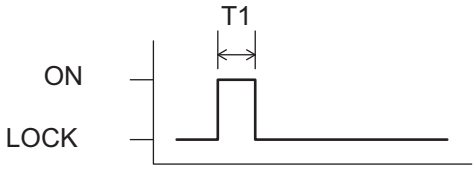

Rewrite Mode ON-LOCK operation: Twice

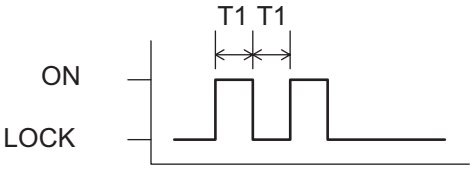

Confirmation Mode ON-LOCK operation: 3 times

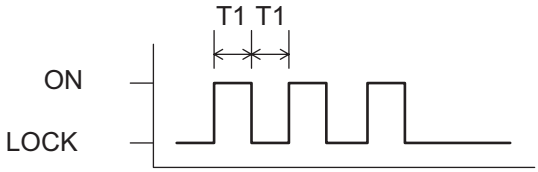

Prohibition Mode ON-LOCK operation: 5 times

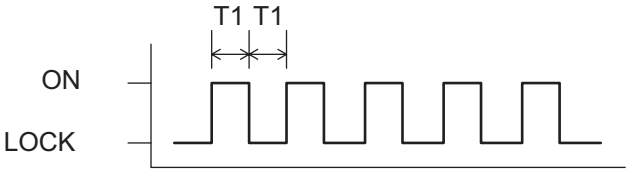

T1: Approximately 1 second

B111914E03

HINT:
If the number of ignition switch ON-LOCK operations is 0, 4, 6 or more, there will be no response (power DOOR LOCK and UNLOCK operation) to show which mode has been selected.

(2) Remove the key from the ignition key cylinder.

DL

(f) The main body ECU automatically performs power door LOCK-UNLOCK operations to indicate which mode has been selected.

Response to mode selection (Power door lock operation):

Add Mode LOCK-UNLOCK operation: Once

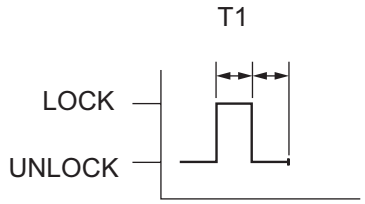

Confirmation Mode LOCK-UNLOCK operation: The number of registered codes (1 to 5 times)

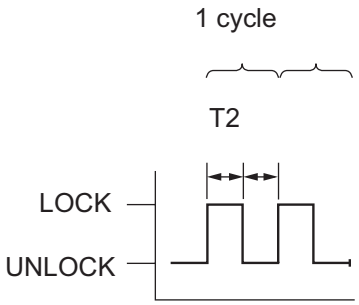

Rewrite Mode LOCK-UNLOCK operation: Twice

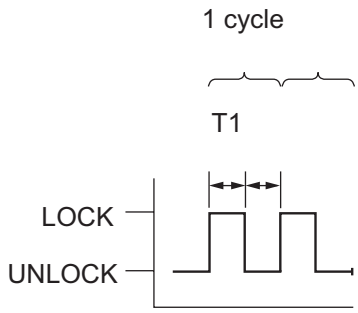

Prohibition Mode LOCK-UNLOCK operation: 5 times

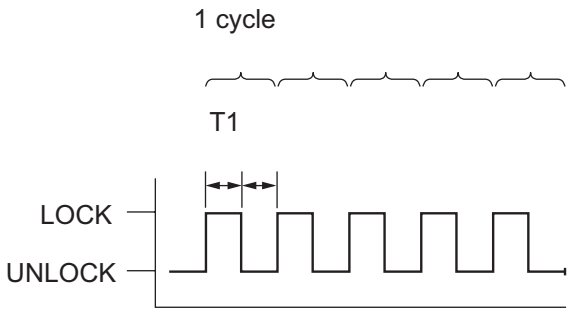

T1: Approximately 1 second **T2: Approximately 2 seconds**

Y B106703E01

HINT:

- In Confirmation Mode, LOCK-UNLOCK operation will occur once for each recognition code that has been registered. For example, if 2 recognition codes have been registered, the LOCK-UNLOCK operation will occur twice.
- In Confirmation Mode, if no recognition codes have been registered, LOCK-UNLOCK operation will occur 11 times.
- If Confirmation Mode or Prohibition Mode is selected, the operation ends after the response to the selected mode is completed.

(g) Register a new recognition code (Add Mode or Rewrite Mode) in accordance with the following procedure.
  (1) Within 45 seconds of Add Mode or Rewrite Mode being selected, press the LOCK and UNLOCK switches on the transmitter switch of the key simultaneously for 1.0 to 1.5 seconds. Within 3 seconds of moving your finger away from the switches, press either switch of the key for more than 1.0 second.
  (2) Within 5 seconds of the transmitter switch being released, the LOCK-UNLOCK operation will be automatically performed once if the registration of the recognition code is correctly completed. If the LOCK-UNLOCK operation is performed twice, the registration of the recognition code has failed, so perform the registration procedure from the beginning once again.

Response to registration completion:

LOCK-UNLOCK Occurs Once

Registration of recognition code has been completed.

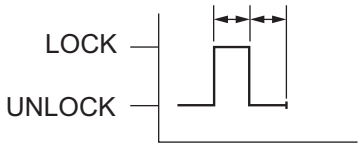

LOCK-UNLOCK Occurs Twice

Registration of recognition code has failed.

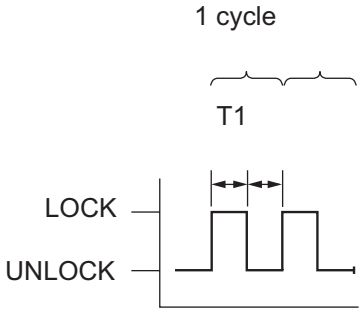

T1: Approximately 1 second

Y B106704E01

(h) If multiple transmitters need to be registered, repeat the registration of a new recognition code procedure within 45 seconds of the previous registration.
(i) If any of the following conditions is met, the registration mode will end.
  (1) The key is inserted into the ignition key cylinder.
  (2) Any doors are opened.

(3) 45 seconds or more elapse after code registration.

(j) Registration of the recognition codes (Add Mode and Rewrite Mode) is completed.

REMOVAL

1. REMOVE DOOR CONTROL TRANSMITTER MODULE

(a) Remove the door control transmitter module.

(1) Using a screwdriver with its tip wrapped in protective tape, pry apart the transmitter housing cover.

NOTICE:
Do not use excessive force when prying apart the housing cover.

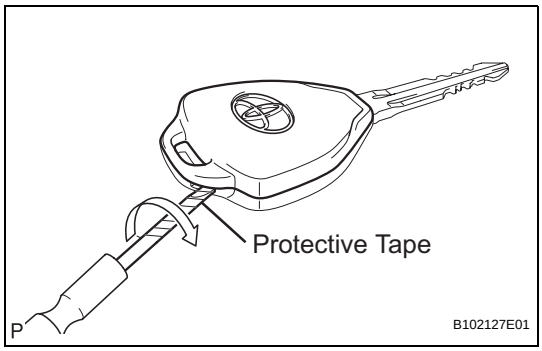

(2) Remove the door control transmitter module from the transmitter housing case.

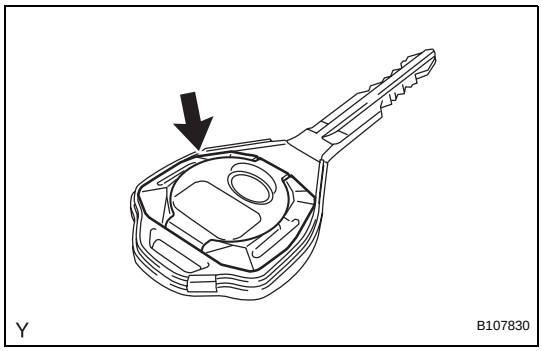

INSPECTION

1. INSPECT DOOR CONTROL TRANSMITTER MODULE

(a) Inspect operation of the transmitter.

(1) Remove the battery (lithium battery) from the transmitter.

(2) Install a new or normal battery (lithium battery).

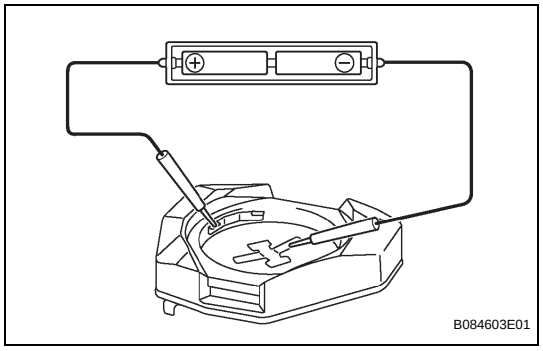

(3) If a new or normal battery is not available, connect 2 new 1.5 V batteries in series. Connect the positive (+) battery electrode to the battery receptacle side terminal, and the negative (-) battery electrode to the bottom terminal, and apply a voltage of 3 V to the transmitter.

(4) In a location that is approximately 1 m (3.28ft.) away from the driver side outside door handle, point the key plate of the transmitter at the vehicle and check operation of the transmitter by pressing the transmitter switches on the transmitter body.

Standard:

The door lock/unlock can be operated via remote control.

The LED illuminates when each switch is pressed.

HINT:

- The minimum operational distance differs depending on the way the transmitter is held and the location.
- Since the transmitter uses faint electric waves, the operational distance might be shortened if noise or a strong electric wave occurs in the area where the frequency is used.

(5) Install the battery (lithium battery).

(b) Inspect the battery capacity.

HINT:

- The capacity of the battery can be checked only when the battery is installed in the transmitter. For a lithium battery used in the transmitter, a voltage of more than 2.5 V is shown on the tester until the energy is completely consumed without the battery installed in the transmitter. Therefore, it is necessary to measure the voltage with the battery installed in the transmitter (a resistance of 1.2 kΩ is applied to the battery) to check the amount of energy left in the battery.
- If the transmitter is faulty, the amount of energy left in the battery might not be checked correctly.

(1) Remove the battery (lithium battery) from the transmitter.

(2) Connect the lead to the negative (-) terminal of the transmitter and install the battery.

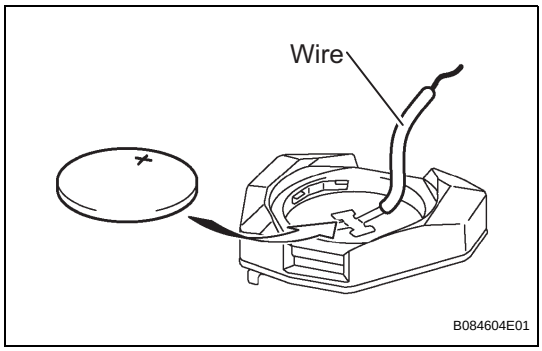

(3) Connect the positive (+) tester probe to the positive (+) side of the battery (lithium battery) and the negative (-) tester probe to the lead respectively.
(4) Press one of the transmitter switches on the transmitter for approximately 1 second.
(5) Press the same or another transmitter switch again and check the voltage.
Standard Voltage:
2.2 V or higher
HINT:
- If the temperature of the battery is low, the inspection cannot be performed correctly. If the result of the test is less than 2.2 V, conduct the test again after leaving the battery in a place with a temperature of 18°C (64°F) for more than 30 minutes.
- The automatic power-off function causes the battery voltage to be 2.5 V or more (a voltage with no resistance applied to the battery) when 0.8 seconds have passed after the switch is pressed. Therefore, read the voltage immediately after the switch is pressed.

(6) Remove the lead.
(7) Set the battery (lithium battery) in the transmitter.

INSTALLATION

1. INSTALL DOOR CONTROL TRANSMITTER MODULE

(a) Install the door control transmitter module.

(1) Install the door control transmitter module into the transmitter housing case.

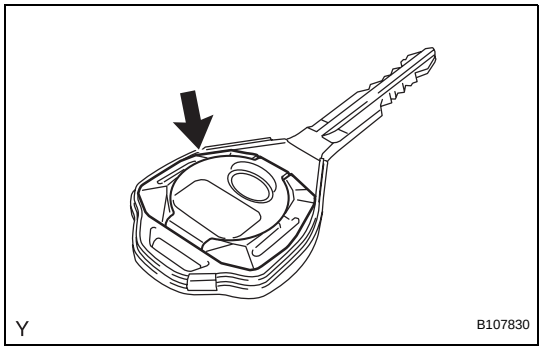

(2) Install the transmitter housing cover onto the transmitter housing case securely.

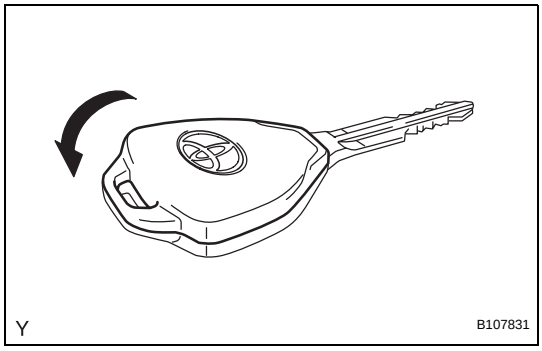

DOOR CONTROL SWITCH (for Sedan)

COMPONENTS

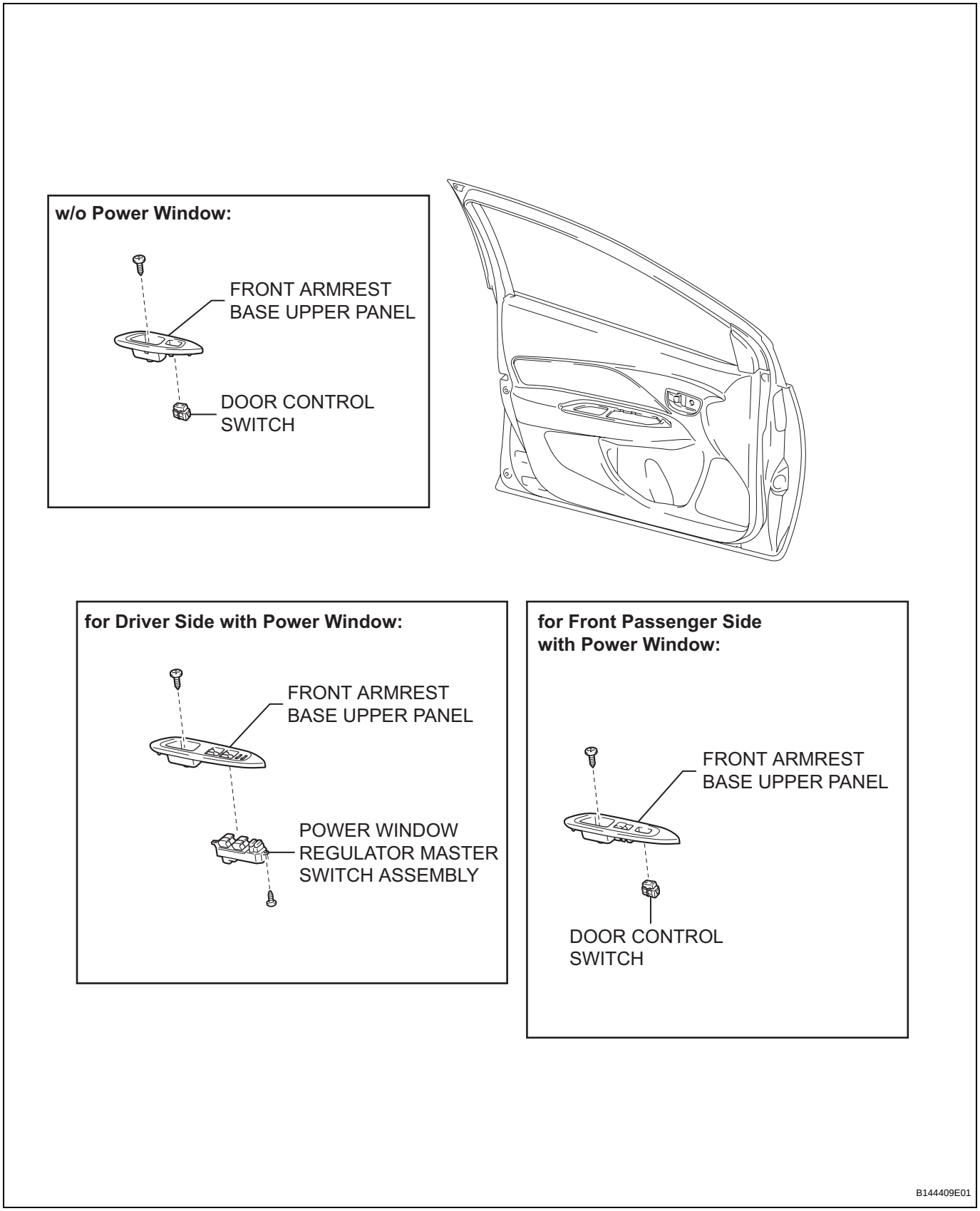

REMOVAL

1. DISCONNECT CABLE FROM NEGATIVE BATTERY TERMINAL

2. REMOVE FRONT ARMREST BASE UPPER PANEL (See page ED-9)

3. REMOVE POWER WINDOW REGULATOR MASTER SWITCH ASSEMBLY (w/ Power Window)

(a) Remove the 3 screws and the power window regulator master switch.

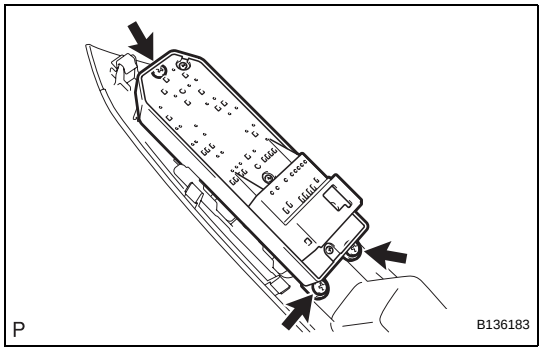

DL

4. REMOVE DOOR CONTROL SWITCH

(a) for Front passenger side with power window:
Using a screwdriver with its tip wrapped in protective tape, disengage the 2 claws and remove the door control switch.

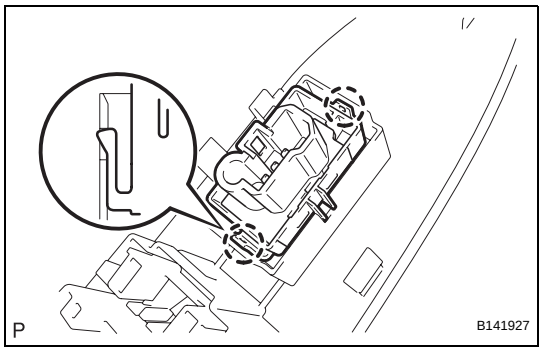

(b) w/o Power window:
Using a screwdriver with its tip wrapped in protective tape, disengage the 2 claws and remove the door control switch.

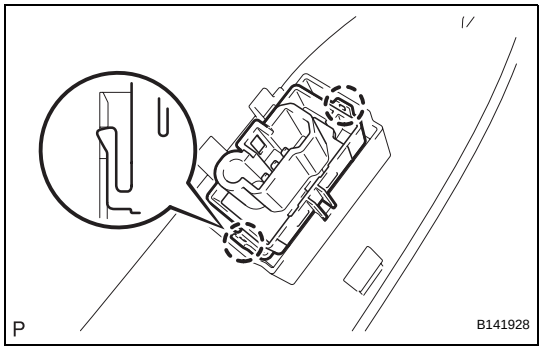

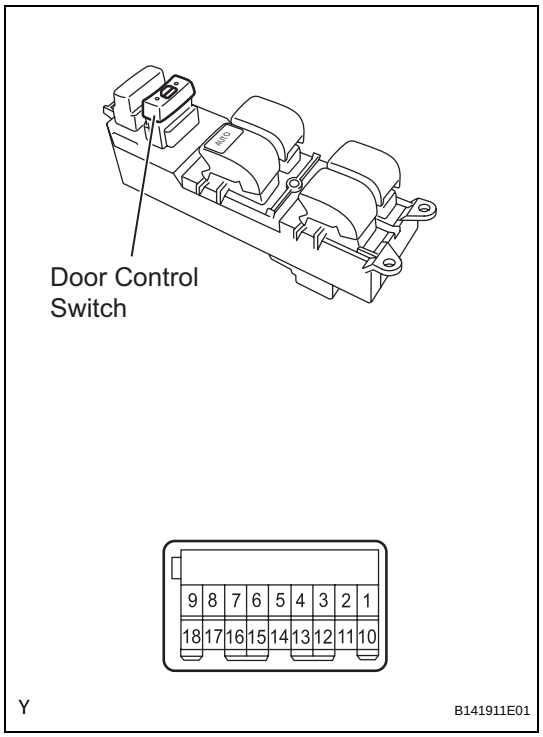

INSPECTION

1. INSPECT POWER WINDOW REGULATOR MASTER SWITCH ASSEMBLY

(a) Check the resistance of the door control switch.

(1) Using an ohmmeter, measure the resistance and check the results in accordance with the value(s) in the table below.

Standard Resistance

Tester Connection	Switch Condition	Specified Condition
1 - 2	LOCK	Below 1 Ω
1 - 2	OFF	10 kΩ or higher
1 - 9	OFF	10 kΩ or higher
1 - 9	UNLOCK	Below 1 Ω

If the result is not as specified, replace the power window regulator master switch.

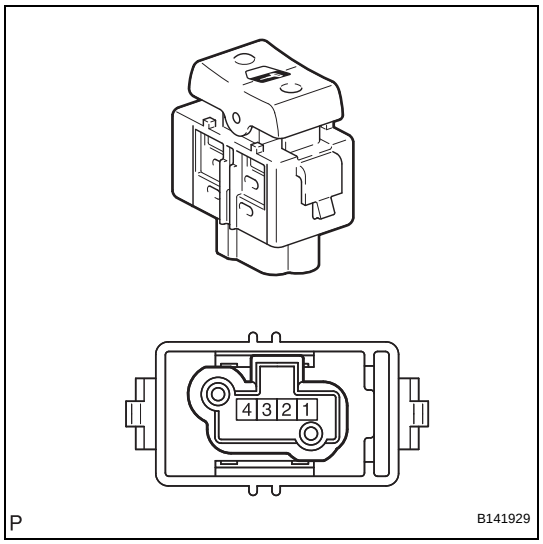

2. INSPECT DOOR CONTROL SWITCH

(a) Check the resistance of the door control switch.

(1) Using an ohmmeter, measure the resistance and check the results in accordance with the value(s) in the table below.

Standard Resistance

Tester Connection	Switch Condition	Specified Condition
3 - 4	LOCK	Below 1 Ω
3 - 4	OFF	10 kΩ or higher
2 - 4	OFF	10 kΩ or higher
2 - 4	UNLOCK	Below 1 Ω

If the result is not as specified, replace the door control switch.

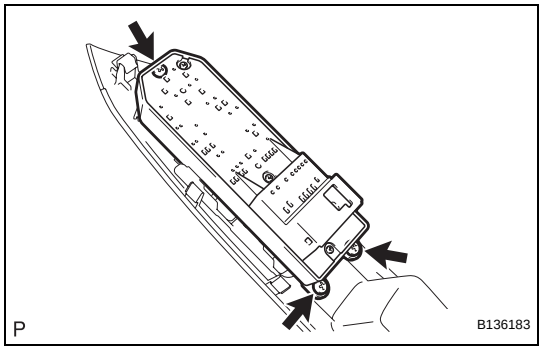

INSTALLATION

1. INSTALL POWER WINDOW REGULATOR MASTER SWITCH ASSEMBLY (w/ Power Window)

(a) Install the power window regulator master switch with the 3 screws.

DL

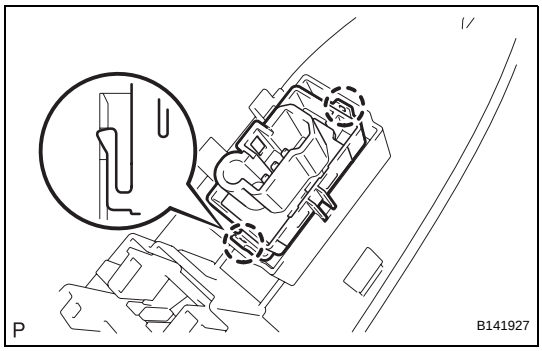

2. INSTALL DOOR CONTROL SWITCH

(a) for Front passenger side with power window:
Engage the 2 claws and install the door control switch.

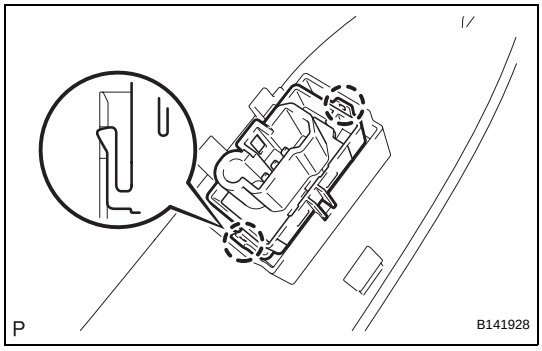

(b) w/o Power window:
Engage the 2 claws and install the door control switch.

3. INSTALL FRONT ARMREST BASE UPPER PANEL (See page ED-28)

4. CONNECT CABLE TO NEGATIVE BATTERY TERMINAL
Torque: 5.4 N*m (55 kgf*cm, 48 in.*lbf)

DOOR CONTROL SWITCH (for Hatchback Driver Door Side)

COMPONENTS

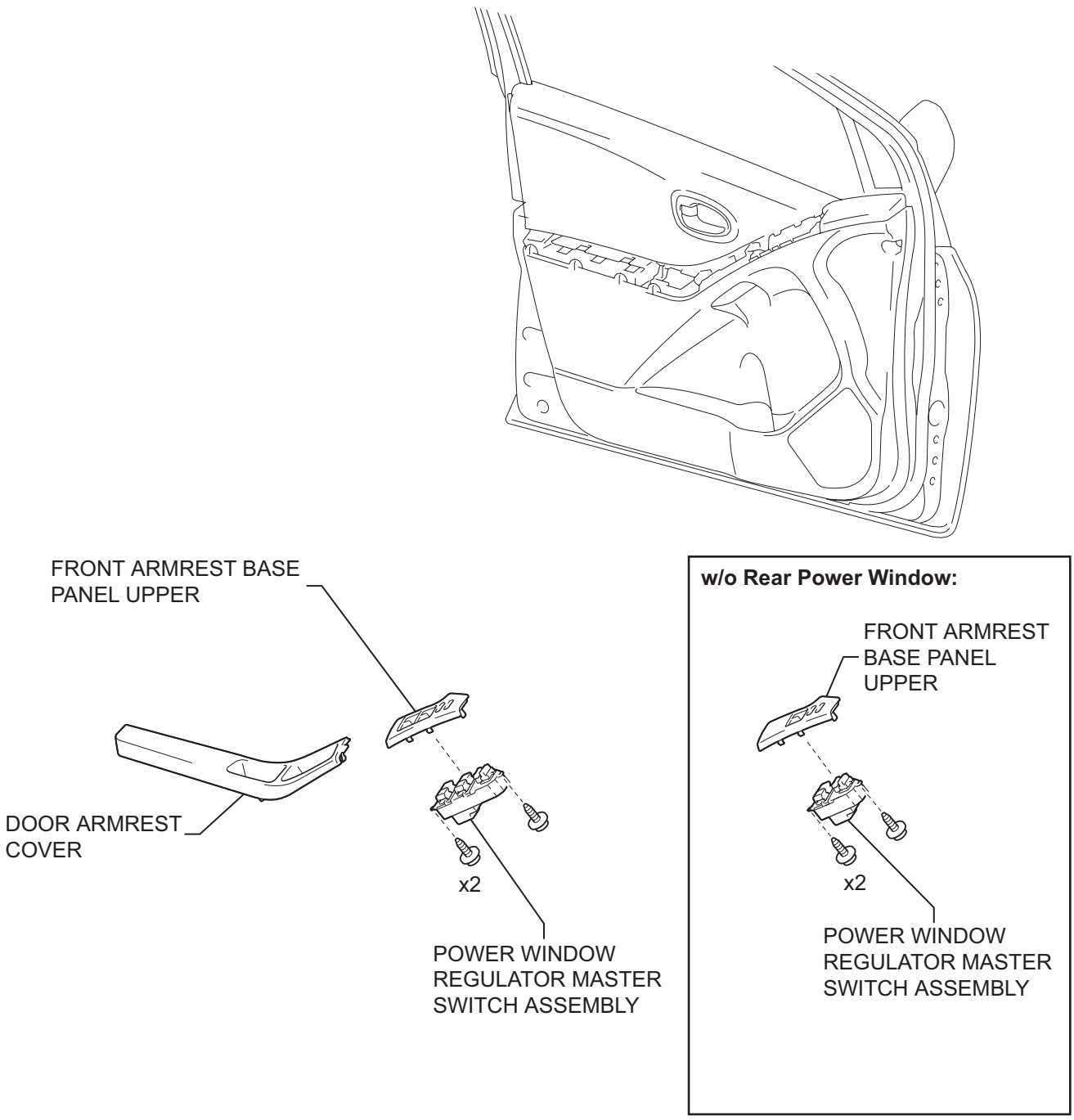

P

B121528E01

REMOVAL

HINT:
- Use the same procedure for both the RH and LH sides.
- The procedure described below is for the LH side.

1. DISCONNECT CABLE FROM NEGATIVE BATTERY TERMINAL

2. REMOVE DOOR ARMREST COVER (See page ED-33)

3. REMOVE FRONT ARMREST BASE PANEL UPPER (See page ED-33)

4. REMOVE POWER WINDOW REGULATOR MASTER SWITCH ASSEMBLY

(a) Remove the 3 screws and the power window regulator master switch.

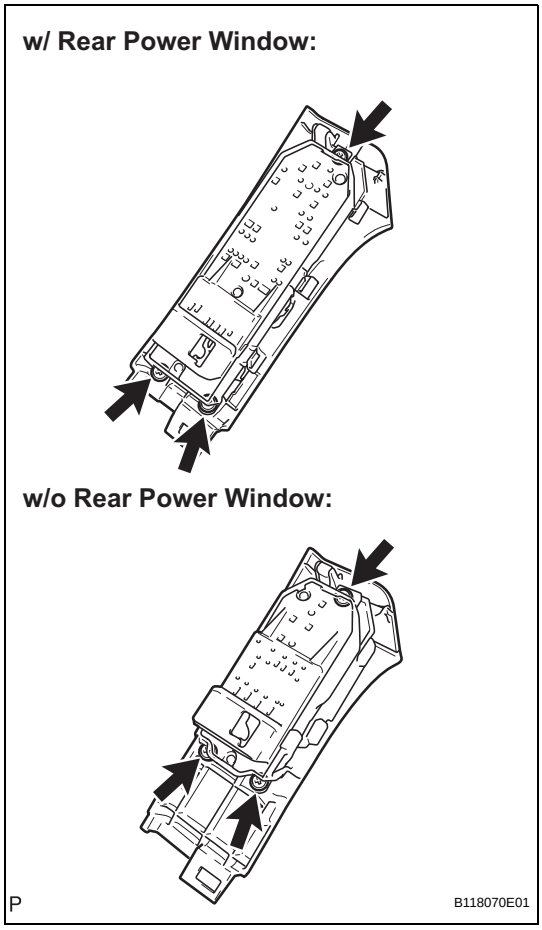

INSPECTION

1. INSPECT POWER WINDOW REGULATOR MASTER SWITCH ASSEMBLY

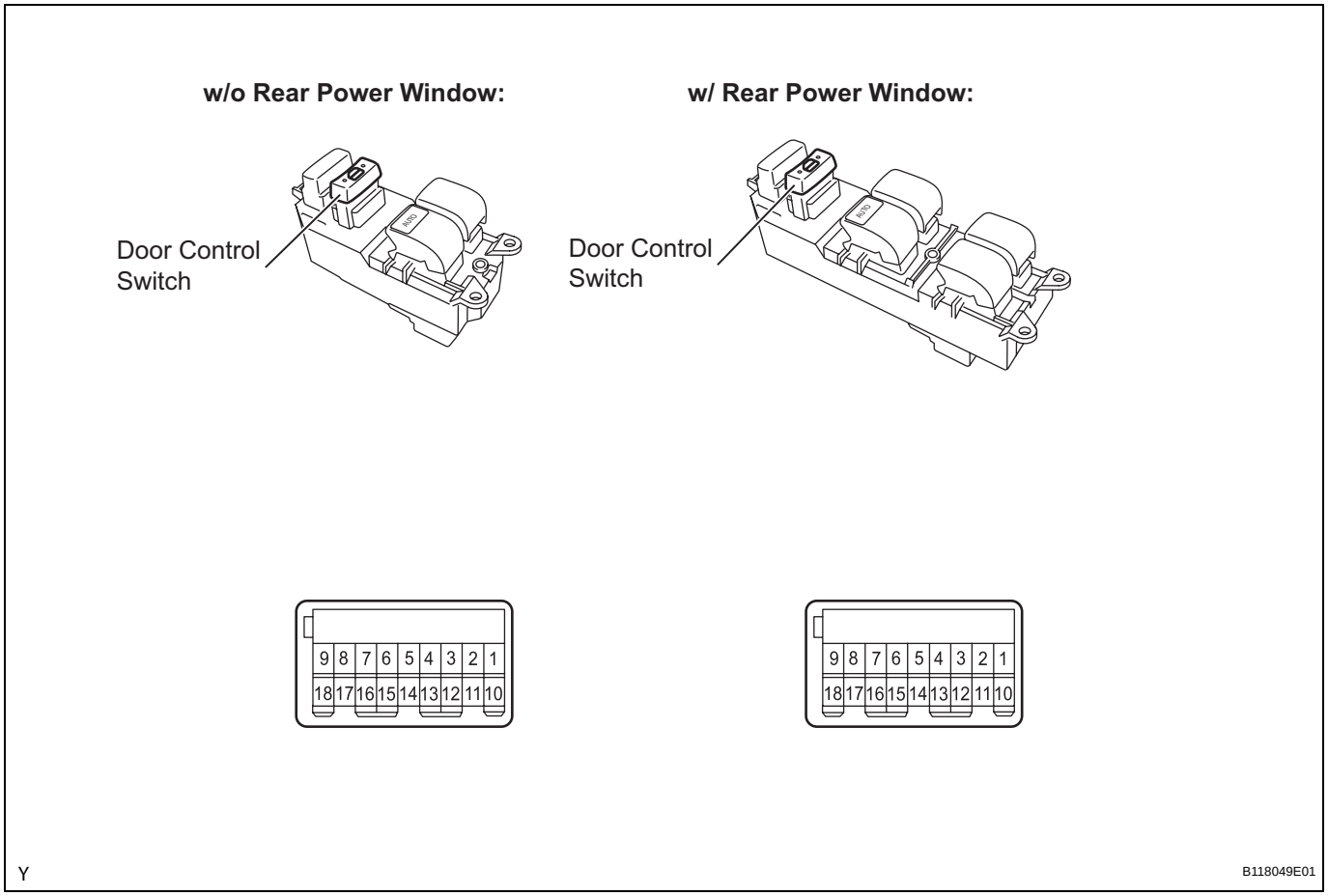

(a) Check the resistance of the door lock switch.

(1) Using an ohmmeter, measure the resistance and check the results in accordance with the value(s) in the table below.

Standard Resistance:
w/ Rear power window

Tester Connection	Switch Condition	Specified Condition
1 - 2	Locked	Below 1 Ω
-	OFF	10 kΩ or higher
1 - 9	Unlocked	Below 1 Ω

If the result is not as specified, replace the power window regulator master switch.

Standard Resistance:
w/o Rear power window

Tester Connection	Switch Condition	Specified Condition
1 - 7	Locked	Below 1 Ω
-	OFF	10 kΩ or higher
7 - 9	Unlocked	Below 1 Ω

If the result is not as specified, replace the power window regulator master switch.

DL

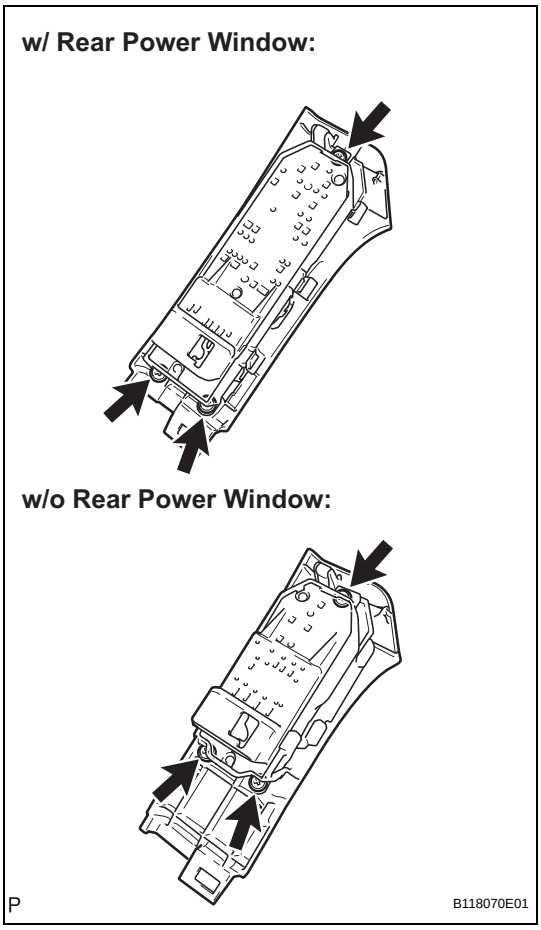

INSTALLATION

1. **INSTALL POWER WINDOW REGULATOR MASTER SWITCH ASSEMBLY**
   (a) Install the power window regulator master switch with the 3 screws.
2. **INSTALL FRONT ARMREST BASE PANEL UPPER (See page ED-53)**
3. **INSTALL DOOR ARMREST COVER (See page ED-53)**
4. **CONNECT CABLE TO NEGATIVE BATTERY TERMINAL**
   Torque: 5.4 N*m (55 kgf*cm, 48 in.*lbf)

DOOR CONTROL SWITCH (for Hatchback Center Consol Side)

COMPONENTS

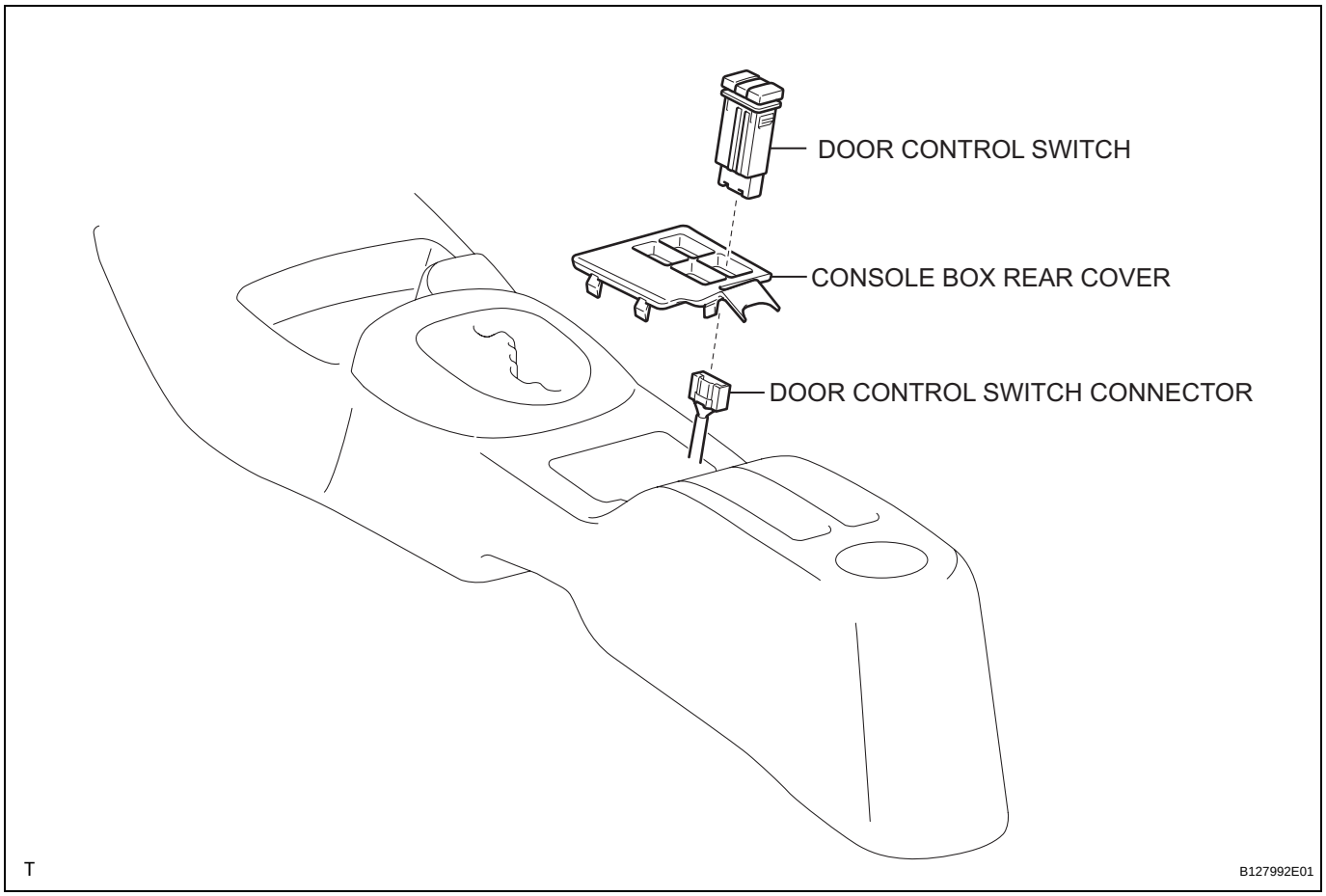

REMOVAL

1. **DISCONNECT CABLE FROM NEGATIVE BATTERY TERMINAL**
2. **REMOVE CONSOLE BOX REAR COVER (See page IP-68)**
3. **REMOVE DOOR CONTROL SWITCH**
   (a) Disengage the 2 claws and remove the door control switch.

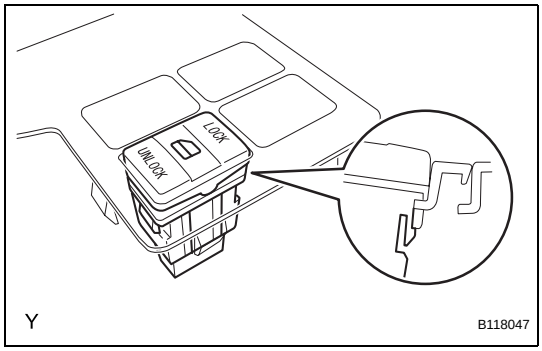

INSPECTION

1. **INSPECT DOOR CONTROL SWITCH**
   (a) Check the resistance.
      (1) Using an ohmmeter, measure the resistance and check the results in accordance with the value(s) in the table below.
      Standard Resistance

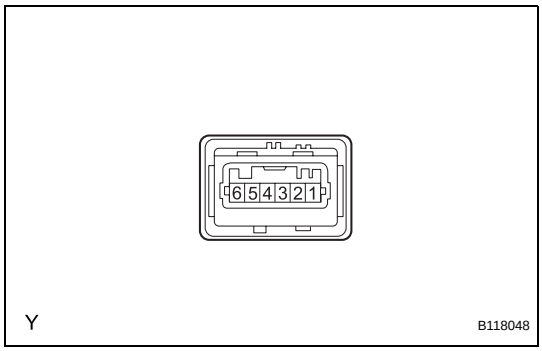

Tester Connection	Condition	Specified Condition
3 - 5	Locked	10 kΩ or higher
3 - 5	Unlocked	Below 1 Ω
4 - 5	Locked	Below 1 Ω
4 - 5	Unlocked	10 kΩ or higher
1 - 6	Illumination Circuit	Below 1 Ω

If the result is not as specified, replace the door control switch.

   (b) Check the illumination operation.
      (1) Connect the positive (+) battery lead to terminal 6 and the negative (-) battery lead to terminal 1, then check that the illumination comes on.
      Standard:
      Illumination comes on.
      If the illumination does not come on, replace the door control switch.

INSTALLATION

1. **INSTALL DOOR CONTROL SWITCH**
   (a) Engage the 2 claws and install the door control switch.
2. **INSTALL CONSOLE BOX REAR COVER (See page IP-79)**
3. **CONNECT CABLE TO NEGATIVE BATTERY TERMINAL**
   Torque: 5.4 N*m (55 kgf*cm, 48 in.*lbf)

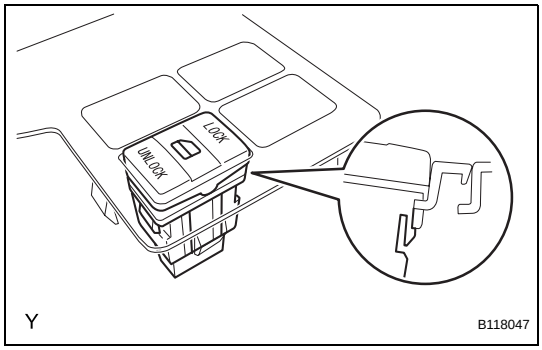

UNLOCK WARNING SWITCH

COMPONENTS

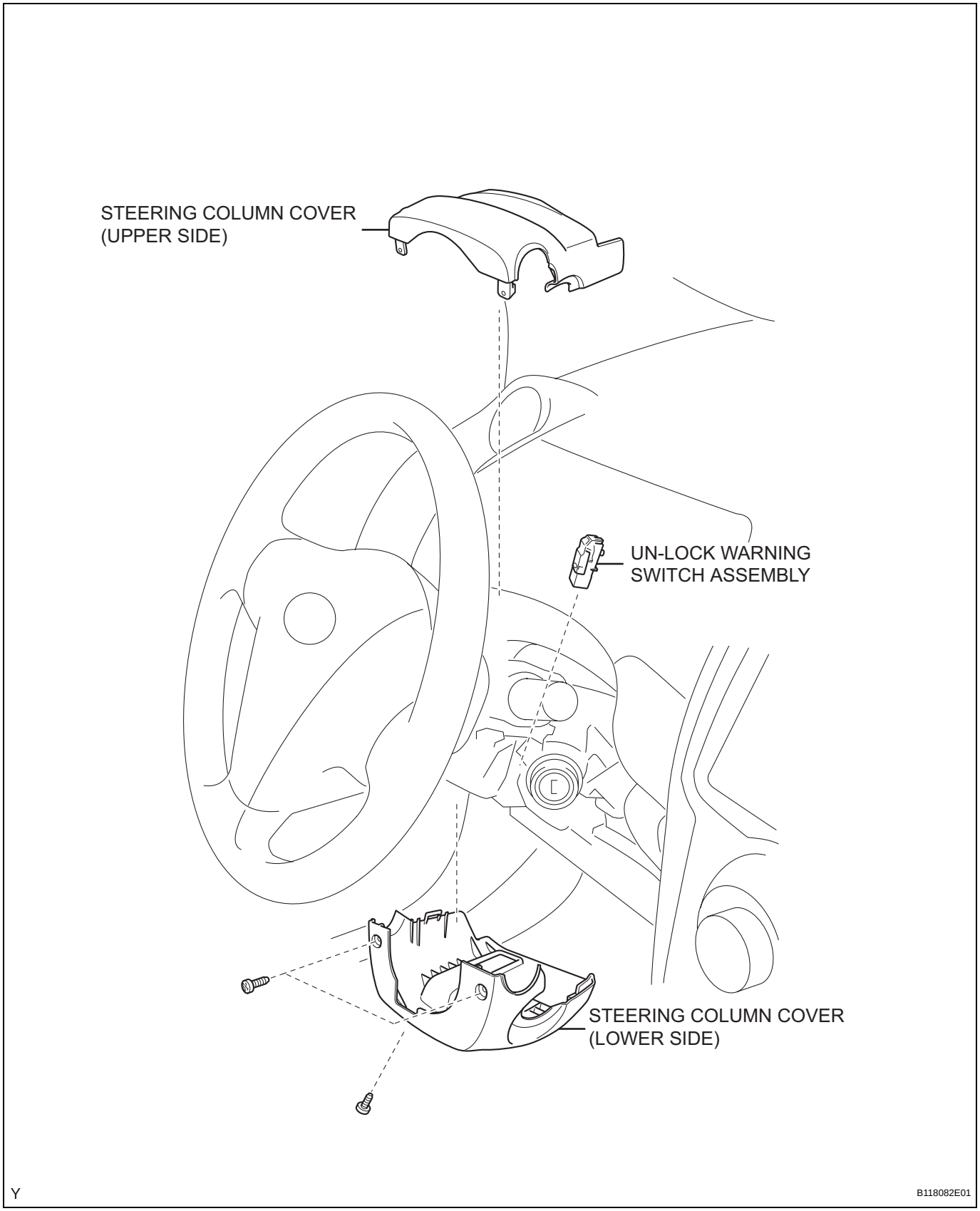

REMOVAL

1. **DISCONNECT CABLE FROM NEGATIVE BATTERY TERMINAL**
2. **REMOVE STEERING COLUMN COVER (See page ST-40)**
3. **REMOVE UN-LOCK WARNING SWITCH ASSEMBLY**
   (a) Insert the key into the ignition key cylinder.
   (b) Disconnect the connector.
   (c) Using a screwdriver with its tip wrapped with protective tape, disengage the 2 claws and remove the unlock warning switch.

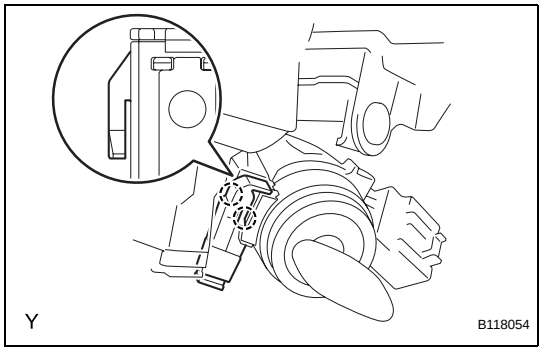

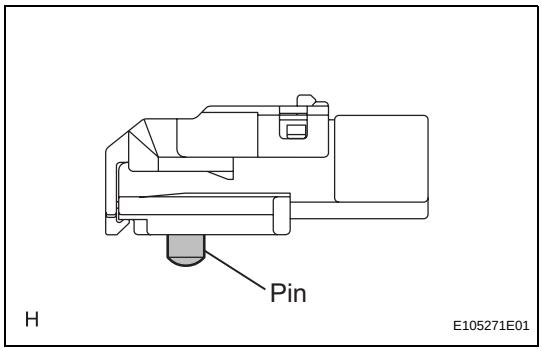

INSPECTION

1. **INSPECT UN-LOCK WARNING SWITCH ASSEMBLY**
   (a) Check the resistance.
      (1) Using an ohmmeter, measure the resistance and check the results in accordance with the value(s) in the table below.
      Standard Resistance

Tester Connection	Condition	Specified Condition
1 - 2	Pin released	10 kΩ or higher
1 - 2	Pin pushed in	Below 1 Ω

If the result is not as specified, replace the unlock warning switch.

INSTALLATION

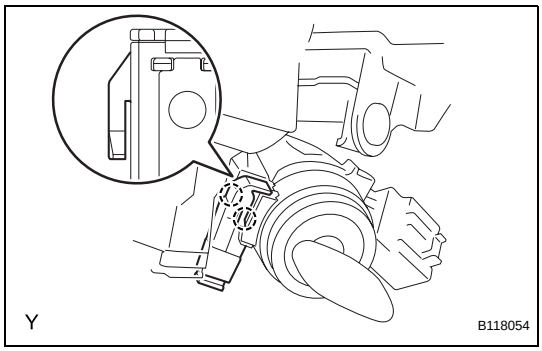

1. **INSTALL UN-LOCK WARNING SWITCH ASSEMBLY**
   (a) Engage the 2 claws and install the unlock warning switch.
   (b) Connect the connector.
2. **INSTALL STEERING COLUMN COVER (See page ST-42)**
3. **CONNECT CABLE TO NEGATIVE BATTERY TERMINAL**
   Torque: 5.4 N*m (55 kgf*cm, 48 in.*lbf)

FRONT DOOR LOCK (for Sedan)

COMPONENTS

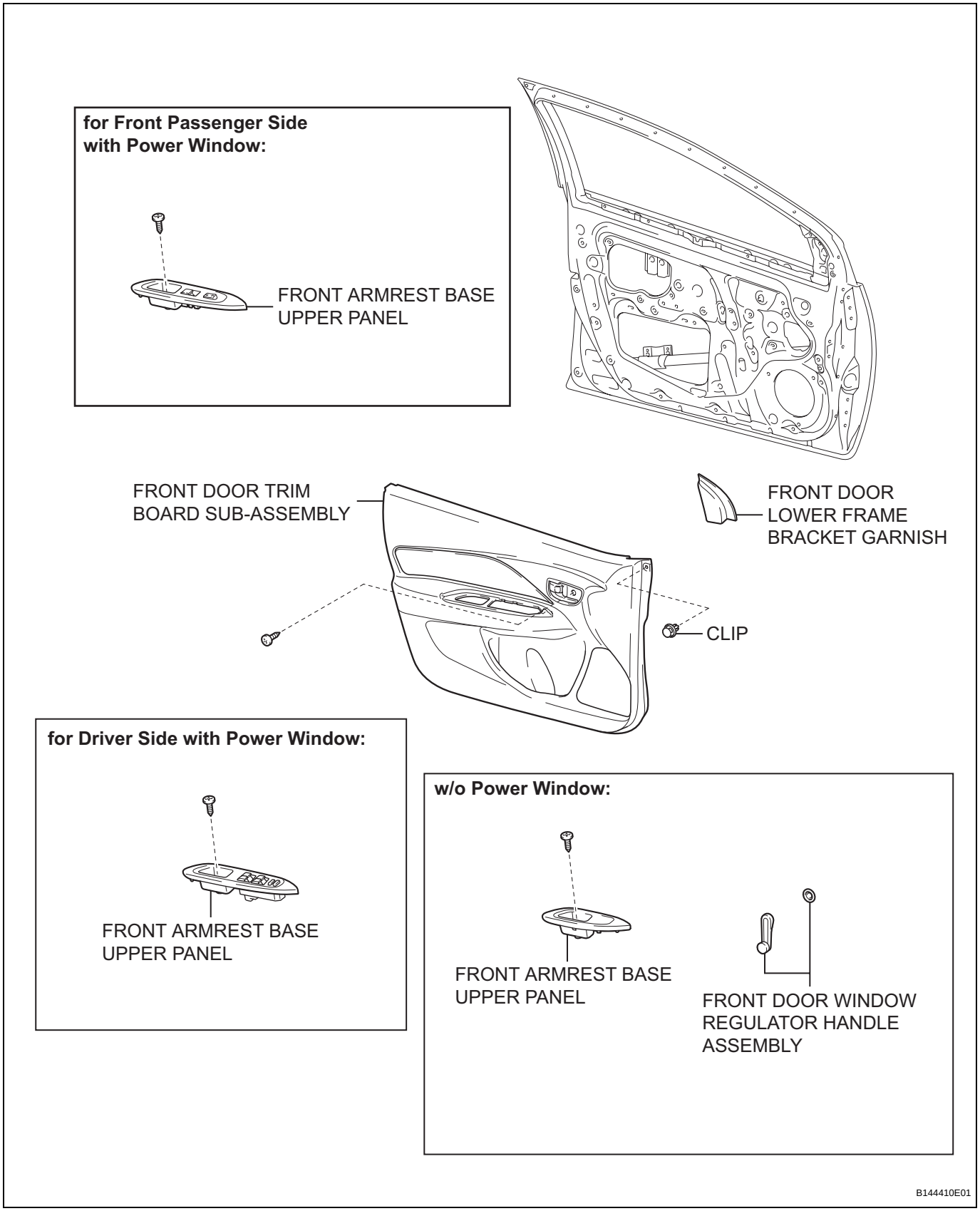

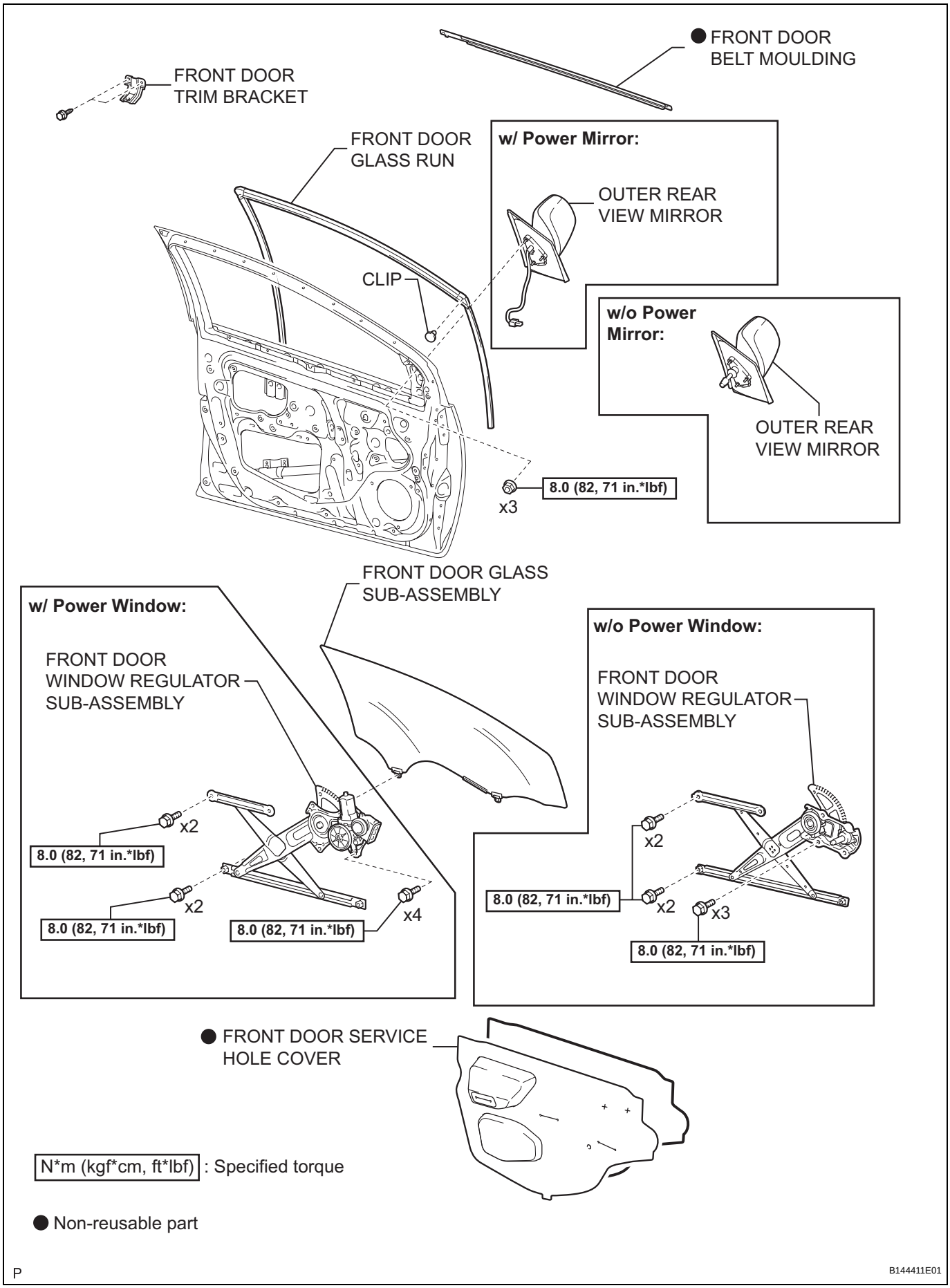
● FRONT DOOR BELT MOULDING
FRONT DOOR TRIM BRACKET
FRONT DOOR GLASS RUN
w/ Power Mirror:
OUTER REAR VIEW MIRROR
CLIP
w/o Power Mirror:
OUTER REAR VIEW MIRROR
8.0 (82, 71 in.*lbf)
x3
FRONT DOOR GLASS SUB-ASSEMBLY
w/ Power Window:
FRONT DOOR WINDOW REGULATOR SUB-ASSEMBLY
x2
8.0 (82, 71 in.*lbf)
x2
8.0 (82, 71 in.*lbf)
8.0 (82, 71 in.*lbf)
x4
w/o Power Window:
FRONT DOOR WINDOW REGULATOR SUB-ASSEMBLY
x2
8.0 (82, 71 in.*lbf)
x2
x3
8.0 (82, 71 in.*lbf)
● FRONT DOOR SERVICE HOLE COVER
N*m (kgf*cm, ft*lbf) : Specified torque
● Non-reusable part
P
B144411E01

DL

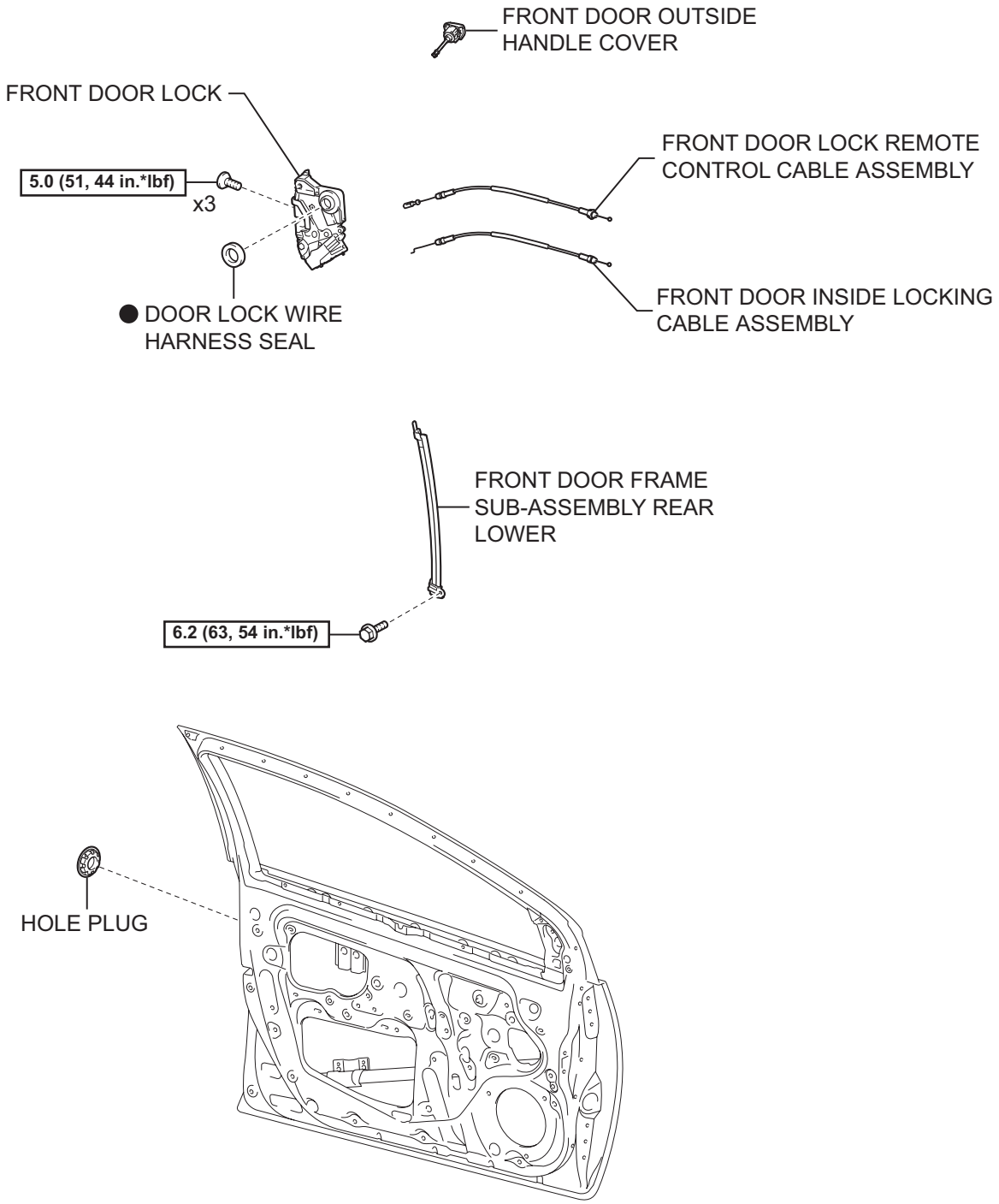

N*m (kgf*cm, ft*lbf) : Specified torque

● Non-reusable part

P

B140694E01

DL

REMOVAL

HINT:
- Use the same procedure for both the RH and LH sides.
- The procedure described below is for the LH side.

1. **DISCONNECT CABLE FROM NEGATIVE BATTERY TERMINAL**
2. **REMOVE FRONT DOOR WINDOW REGULATOR HANDLE ASSEMBLY (w/o Power Window) (See page ED-9)**
3. **REMOVE FRONT DOOR LOWER FRAME BRACKET GARNISH (See page ED-9)**
4. **REMOVE FRONT ARMREST BASE UPPER PANEL (See page ED-9)**
5. **REMOVE FRONT DOOR TRIM BOARD SUB-ASSEMBLY (See page ED-11)**
6. **REMOVE OUTER REAR VIEW MIRROR (See page MI-8)**
7. **REMOVE FRONT DOOR BELT MOULDING (See page ET-85)**
8. **REMOVE FRONT DOOR TRIM BRACKET (See page ED-12)**
9. **REMOVE FRONT DOOR SERVICE HOLE COVER (See page ED-12)**
10. **REMOVE FRONT DOOR GLASS SUB-ASSEMBLY (See page ED-12)**
11. **REMOVE FRONT DOOR WINDOW REGULATOR SUB-ASSEMBLY (See page ED-13)**
12. **REMOVE FRONT DOOR GLASS RUN (See page ED-14)**
13. **REMOVE FRONT DOOR FRAME SUB-ASSEMBLY REAR LOWER (See page ED-14)**
14. **REMOVE FRONT DOOR OUTSIDE HANDLE COVER (See page ED-15)**
15. **REMOVE FRONT DOOR LOCK**
    (a) Using "Torx" socket wrench T30, loosen the 3 screws.
    NOTICE:
    Do not drop or damage the front door lock when removing the screws.
    (b) Move the front door lock downward, remove the outside handle frame link and remove the front door lock.
    HINT:
    Remove the front door lock through the service hole.

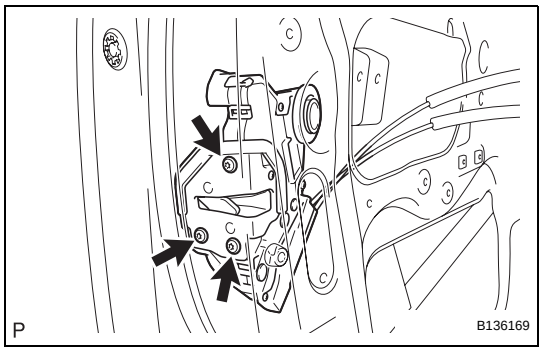

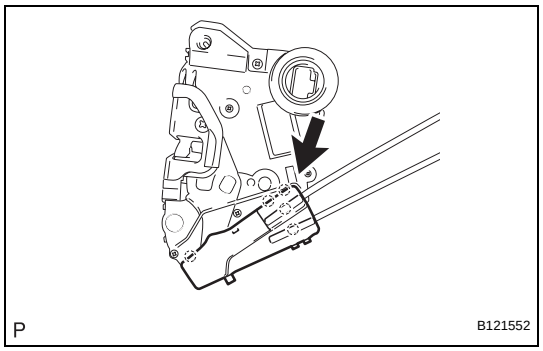

(c) Open the cover.

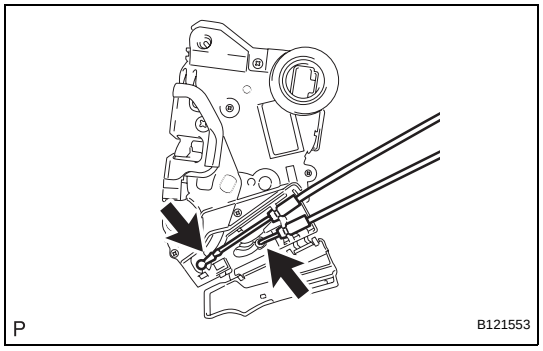

(d) Disconnect the front door lock remote control cable and the front door inside locking cable.
(e) Remove the door lock wire harness seal.

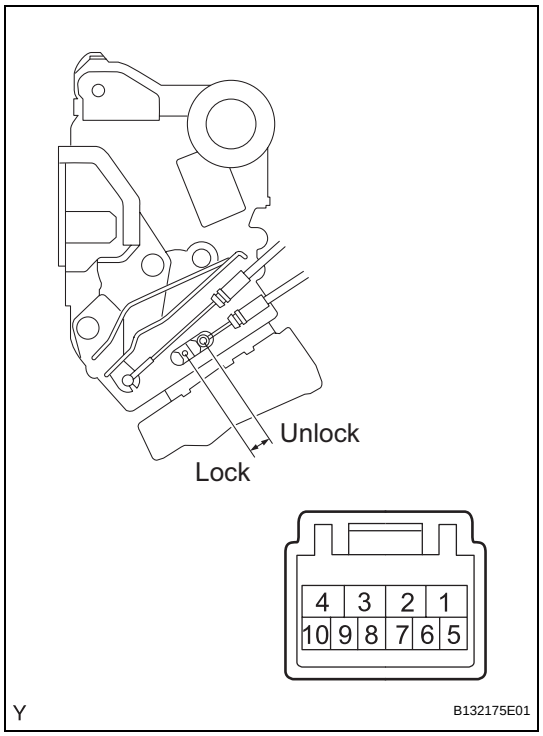

INSPECTION

1. INSPECT FRONT DOOR LOCK ASSEMBLY LH

(a) w/ Power door lock:
Check the operation.
(1) Apply battery voltage to the front door lock and check the operation of the front door lock motor.
Standard

Measurement Condition	Specified Condition
Battery positive (+) → Terminal 4 Battery negative (-) → Terminal 1	Locks
Battery positive (+) → Terminal 1 Battery negative (-) → Terminal 4	Unlocks

If the result is not as specified, replace the front door lock.

(b) Check the resistance of the unlock detection switch.
(1) Using an ohmmeter, measure the resistance and check the results in accordance with the value(s) in the table below.
Standard Resistance

Tester Connection	Door Lock Condition	Specified Condition
7 - 8	Locked	10 kΩ or higher
7 - 8	Unlocked	Below 1 Ω

If the result is not as specified, replace the front door lock.

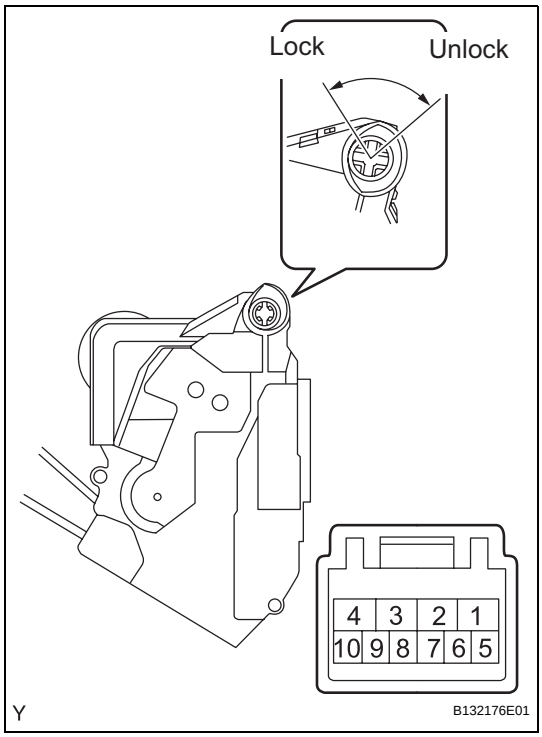

(c) Check the resistance of the door lock and unlock switch.

(1) Using an ohmmeter, measure the resistance and check the results in accordance with the value(s) in the table below.

Standard Resistance

Tester Connection	Door Lock Condition	Specified Condition
7 - 9	Locked	Below 1 Ω
7 - 9	Unlocked	10 kΩ or higher
7 - 10	Locked	10 kΩ or higher
7 - 10	Unlocked	Below 1 Ω

If the result is not as specified, replace the front door lock.

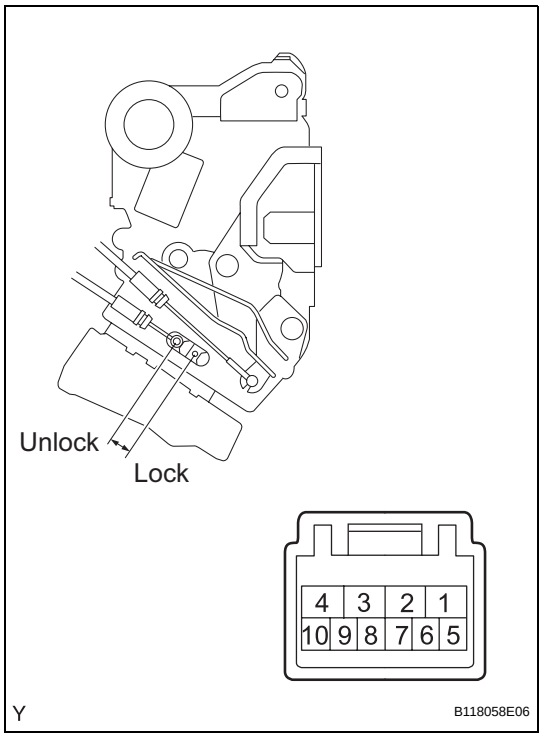

2. INSPECT FRONT DOOR LOCK ASSEMBLY RH

(a) w/ Power door lock:
Check the operation.

(1) Apply battery voltage to the front door lock and check the operation of the front door lock motor.

Standard

Measurement Condition	Specified Condition
Battery positive (+) → Terminal 4 Battery negative (-) → Terminal 1	Locks
Battery positive (+) → Terminal 1 Battery negative (-) → Terminal 4	Unlocks

If the result is not as specified, replace the front door lock.

(b) Check the resistance of the unlock detection switch.

(1) Using an ohmmeter, measure the resistance and check the results in accordance with the value(s) in the table below.

Standard Resistance

Tester Connection	Door Lock Condition	Specified Condition
7 - 8	Locked	10 kΩ or higher
7 - 8	Unlocked	Below 1 Ω

If the result is not as specified, replace the front door lock.

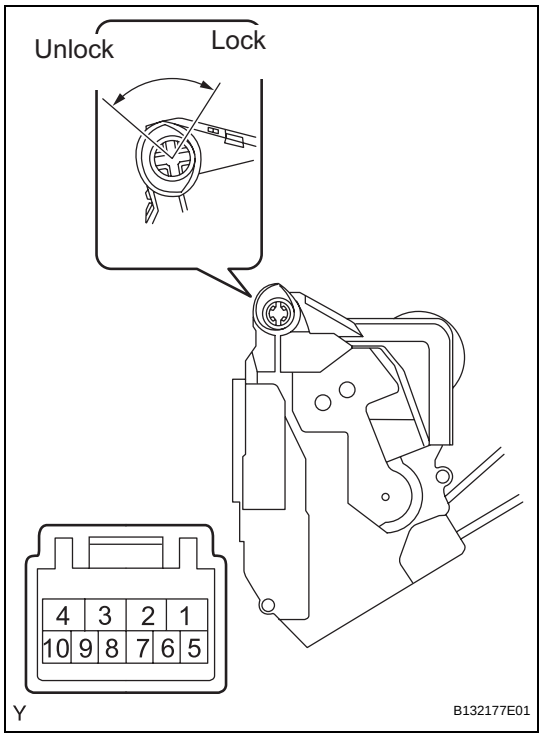

(c) Check the resistance of door lock and unlock switch.

(1) Using an ohmmeter, measure the resistance and check the results in accordance with the value(s) in the table below.

Standard Resistance

Tester Connection	Door Lock Condition	Specified Condition
6 - 8	Locked	Below 1 Ω
6 - 8	Unlocked	10 kΩ or higher
5 - 8	Locked	10 kΩ or higher
5 - 8	Unlocked	Below 1 Ω

If the result is not as specified, replace the front door lock.

INSTALLATION

1. INSTALL FRONT DOOR LOCK

NOTICE:

- **If reusing a door lock that has been removed, replace the packing in the connecting part with new.**
- **Make sure that no grease or dirt adheres to the packing surface in the connecting part.**

(a) Apply MP grease to the sliding and rotating areas of the front door lock.

(b) Connect the front door lock remote control cable and the front door inside locking cable.

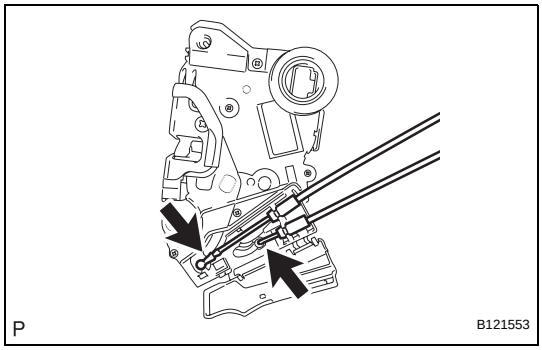

(c) Close the cover.

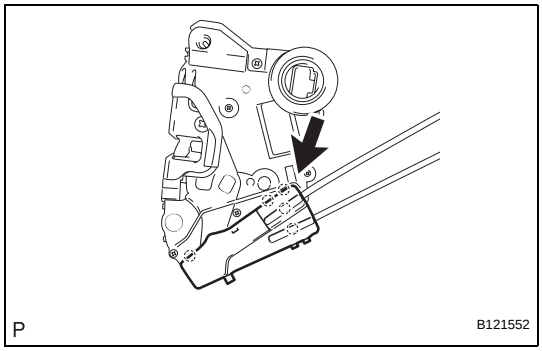

(d) Insert the door lock open rod into the front door lock, then set it to the door panel.

NOTICE:

Make sure that the outside handle link is securely engaged with the door lock.

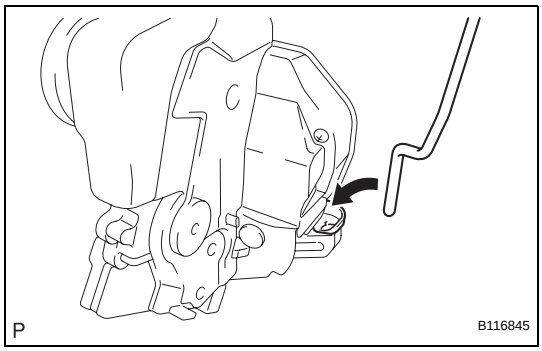

(e) Apply adhesive to the threads of the screws.

Adhesive:

Toyota Genuine Adhesive 1324, Three Bond 1324 or the equivalent.

(f) Using "Torx" socket wrench T30, install the front door lock with the 3 screws.

Torque: 5.0 N*m (51 kgf*cm, 44 in.*lbf)

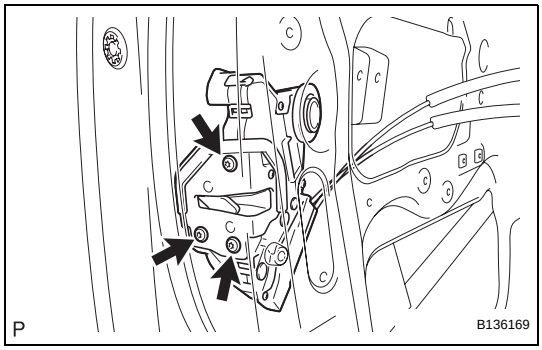

2. INSTALL FRONT DOOR OUTSIDE HANDLE COVER

(See page ED-23)

3. **INSTALL FRONT DOOR FRAME SUB-ASSEMBLY REAR LOWER (See page ED-23)**
4. **INSTALL FRONT DOOR GLASS RUN (See page ED-23)**
5. **INSTALL FRONT DOOR WINDOW REGULATOR SUB-ASSEMBLY (See page ED-24)**
6. **INSTALL FRONT DOOR GLASS SUB-ASSEMBLY (See page ED-24)**
7. **INSTALL FRONT DOOR SERVICE HOLE COVER (See page ED-25)**
8. **INSTALL FRONT DOOR TRIM BRACKET (See page ED-25)**
9. **INSTALL FRONT DOOR BELT MOULDING (See page ET-86)**
10. **INSTALL OUTER REAR VIEW MIRROR (See page MI-11)**
11. **INSTALL FRONT DOOR TRIM BOARD SUB-ASSEMBLY (See page ED-26)**
12. **INSTALL FRONT ARMREST BASE UPPER PANEL (See page ED-28)**
13. **INSTALL FRONT DOOR LOWER FRAME BRACKET GARNISH (See page ED-28)**
14. **INSTALL FRONT DOOR WINDOW REGULATOR HANDLE ASSEMBLY (w/o Power Window) (See page ED-29)**
15. **CONNECT CABLE TO NEGATIVE BATTERY TERMINAL**
    Torque: 5.4 N*m (55 kgf*cm, 48 in.*lbf)

FRONT DOOR LOCK (for Hatchback)

COMPONENTS

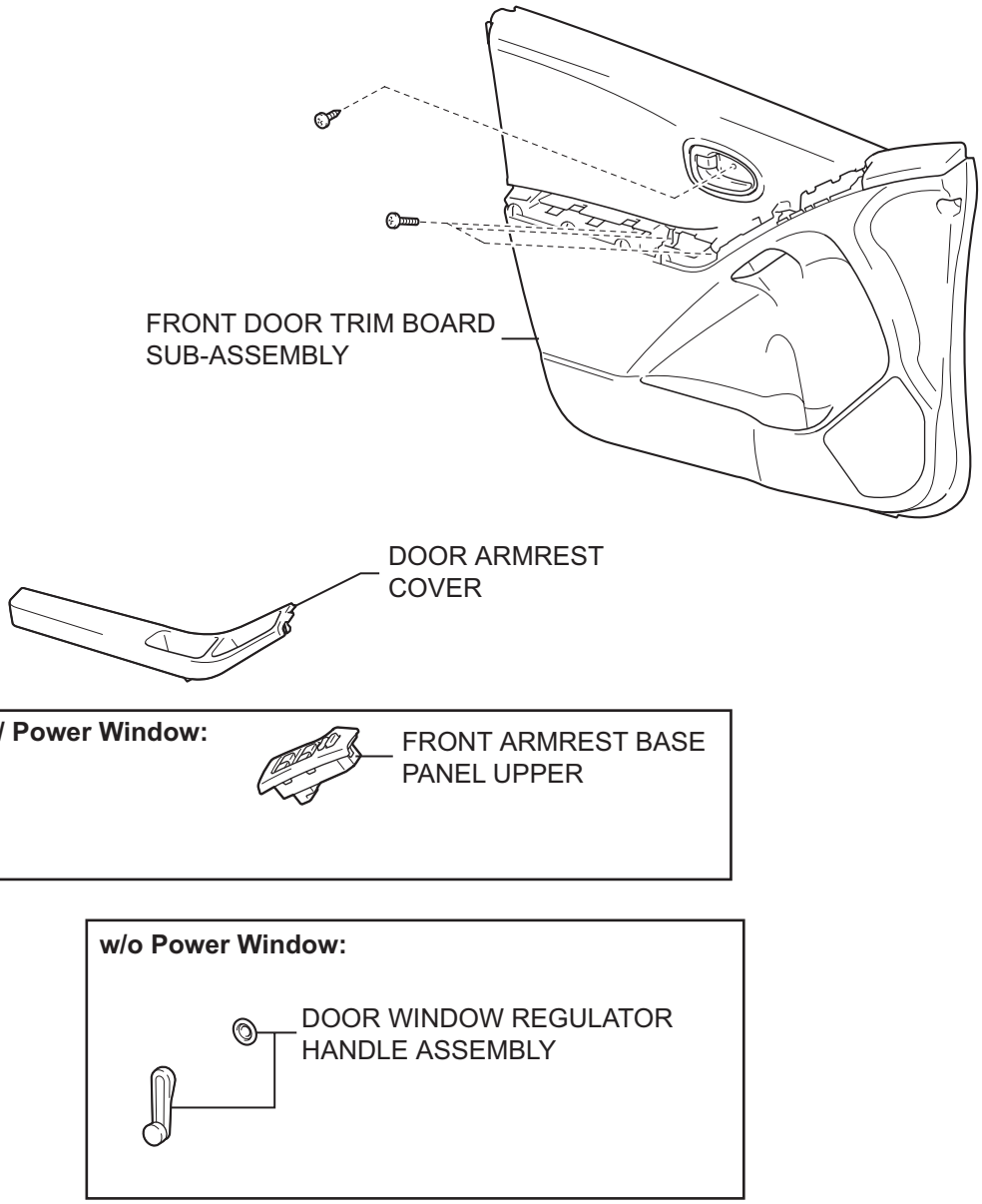

P

B116979E01

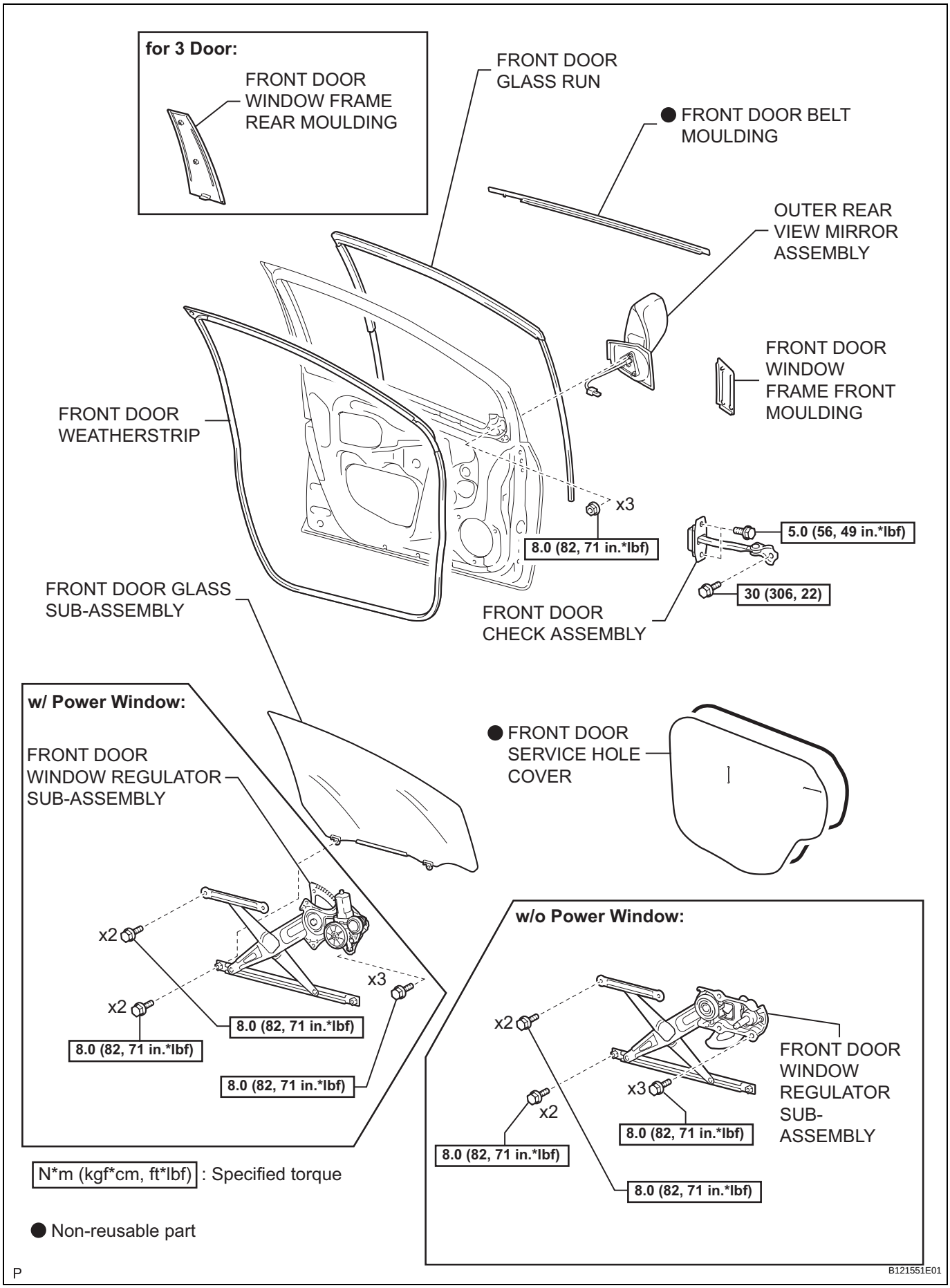
for 3 Door:
FRONT DOOR WINDOW FRAME REAR MOULDING
FRONT DOOR GLASS RUN
● FRONT DOOR BELT MOULDING
OUTER REAR VIEW MIRROR ASSEMBLY
FRONT DOOR WINDOW FRAME FRONT MOULDING
FRONT DOOR WEATHERSTRIP
x3
8.0 (82, 71 in.*lbf)
5.0 (56, 49 in.*lbf)
30 (306, 22)
FRONT DOOR CHECK ASSEMBLY
FRONT DOOR GLASS SUB-ASSEMBLY
w/ Power Window:
FRONT DOOR WINDOW REGULATOR SUB-ASSEMBLY
● FRONT DOOR SERVICE HOLE COVER
x2
x2
x3
8.0 (82, 71 in.*lbf)
8.0 (82, 71 in.*lbf)
8.0 (82, 71 in.*lbf)
w/o Power Window:
x2
x3
x2
8.0 (82, 71 in.*lbf)
8.0 (82, 71 in.*lbf)
8.0 (82, 71 in.*lbf)
FRONT DOOR WINDOW REGULATOR SUB-ASSEMBLY
N*m (kgf*cm, ft*lbf) : Specified torque
● Non-reusable part
P
B121551E01

DL

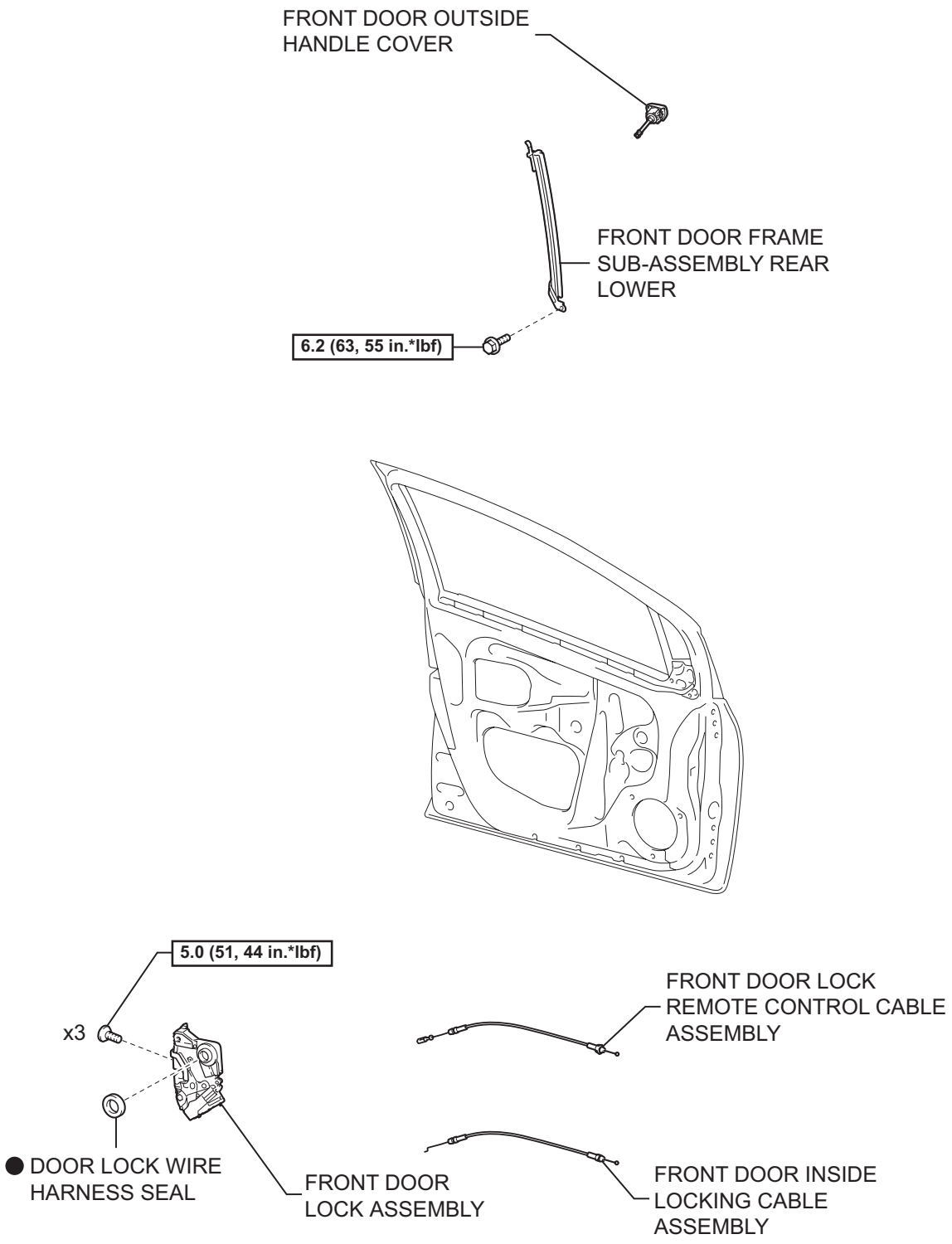

N*m (kgf*cm, ft*lbf) : Specified torque

● Non-reusable part

P

B116981E01

REMOVAL

HINT:
- Use the same procedure for both the RH and LH sides.
- The procedure listed below is for the LH side.

1. **DISCONNECT CABLE FROM NEGATIVE BATTERY TERMINAL**
2. **REMOVE DOOR WINDOW REGULATOR HANDLE ASSEMBLY (w/o Power Window) (See page ED-57)**
3. **REMOVE DOOR ARMREST COVER (See page ED-33)**
4. **REMOVE FRONT ARMREST BASE PANEL UPPER (See page ED-33)**
5. **REMOVE FRONT DOOR TRIM BOARD SUB-ASSEMBLY (See page ED-34)**
6. **REMOVE FRONT DOOR WINDOW FRAME FRONT MOULDING (See page ET-114)**
7. **REMOVE FRONT DOOR WINDOW FRAME REAR MOULDING (for 3 Door) (See page ET-114)**
8. **REMOVE OUTER REAR VIEW MIRROR ASSEMBLY (See page MI-13)**
9. **REMOVE FRONT DOOR BELT MOULDING (See page ET-91)**
10. **REMOVE FRONT DOOR SERVICE HOLE COVER (See page ED-36)**
11. **REMOVE FRONT DOOR GLASS SUB-ASSEMBLY (See page ED-36)**
12. **REMOVE FRONT DOOR GLASS RUN (See page ED-37)**
13. **REMOVE FRONT DOOR WINDOW REGULATOR SUB-ASSEMBLY (w/ Power Window) (See page ED-37)**
14. **REMOVE FRONT DOOR WINDOW REGULATOR SUB-ASSEMBLY (w/o Power Window) (See page ED-60)**
15. **REMOVE FRONT DOOR CHECK ASSEMBLY (See page ED-37)**
16. **REMOVE FRONT DOOR WEATHERSTRIP (See page ED-38)**
17. **REMOVE FRONT DOOR FRAME SUB-ASSEMBLY REAR LOWER (See page ED-38)**
18. **REMOVE FRONT DOOR OUTSIDE HANDLE COVER (See page ED-39)**

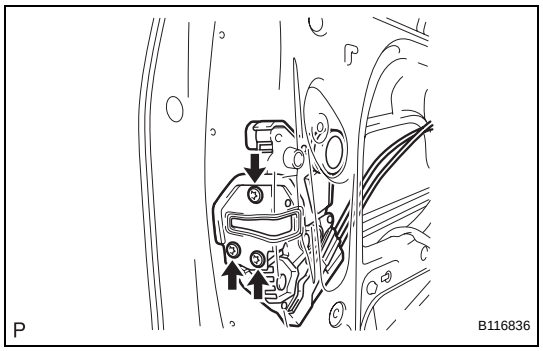

19. REMOVE FRONT DOOR LOCK ASSEMBLY

(a) Using "Torx" socket wrench T30, loosen the 3 screws.

(b) Move the front door lock downward, remove the outside handle frame link and remove the front door lock.

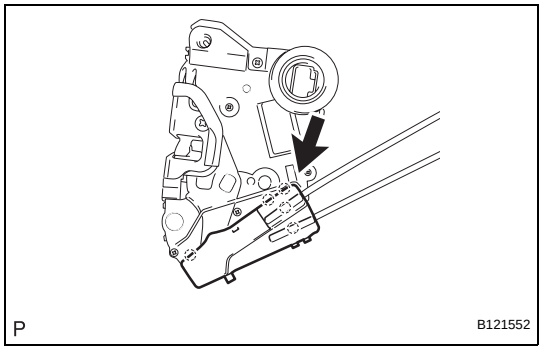

(c) Disengage the 5 claws and open the cover.

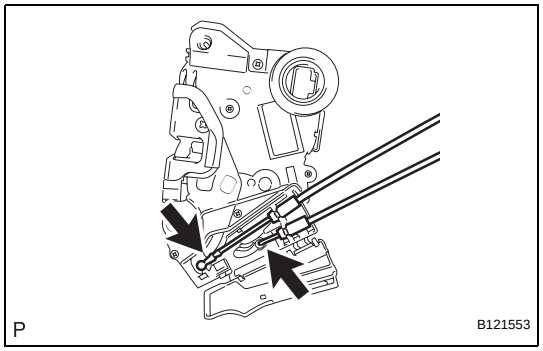

(d) Disconnect the front door lock remote control cable and the front door inside locking cable.

(e) Remove the door lock wire harness seal.

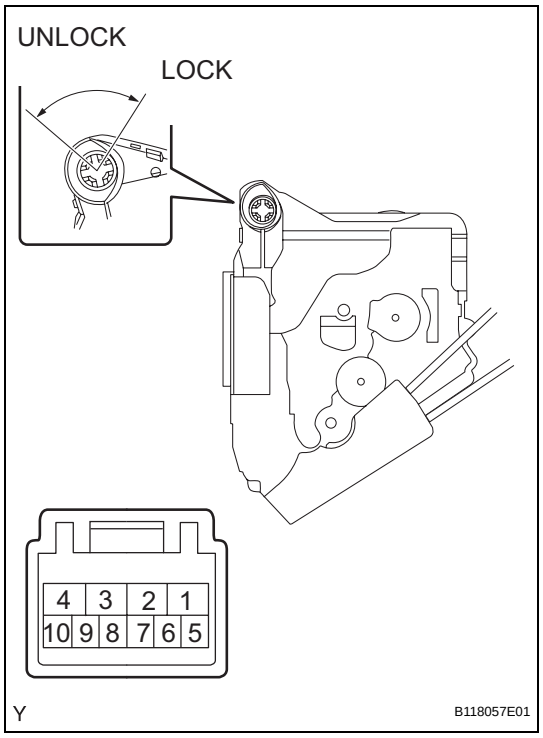

INSPECTION

1. INSPECT FRONT DOOR LOCK ASSEMBLY LH (w/ Theft Deterrent System)

(a) Check the resistance of the unlock detection switch.

(1) Using an ohmmeter, measure the resistance and check the results in accordance with the value(s) in the table below.

Standard Resistance

Tester Connection	Door Lock Condition	Specified Condition
7 - 8	Locked	10 kΩ or higher
7 - 8	Unlocked	Below 1 Ω

If the result is not as specified, replace the front door lock.

DL

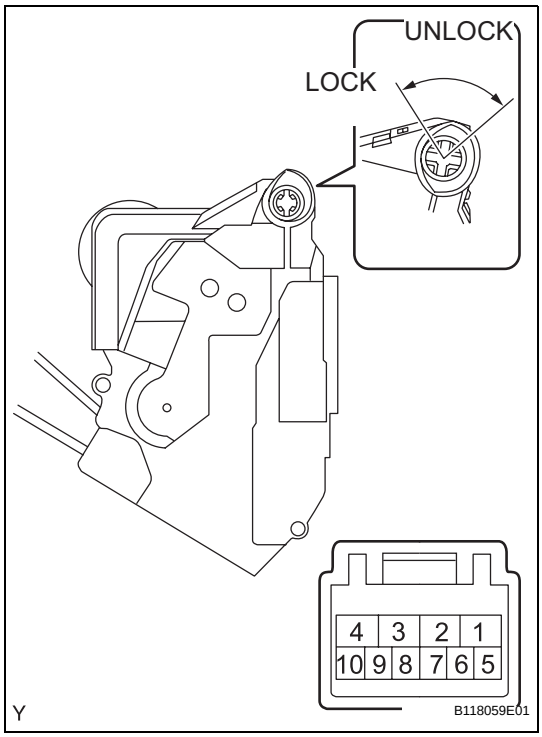

(b) Check the resistance of the door lock and unlock switch.
(1) Using an ohmmeter, measure the resistance and check the results in accordance with the value(s) in the table below.

Standard Resistance

Tester Connection	Door Lock Condition	Specified Condition
7 - 9	Locked	Below 1 Ω
7 - 9	Unlocked	10 kΩ or higher
7 - 10	Locked	10 kΩ or higher
7 - 10	Unlocked	Below 1 Ω

If the result is not as specified, replace the front door lock.

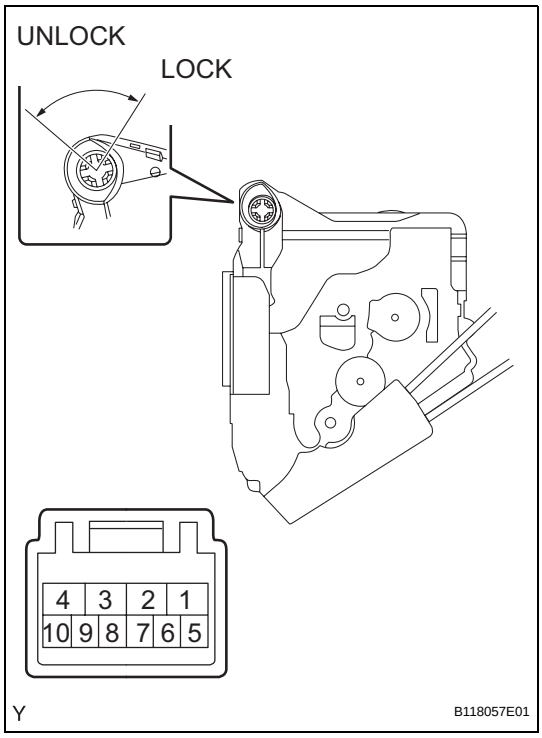

2. INSPECT FRONT DOOR LOCK ASSEMBLY LH (w/o Theft Deterrent System)

(a) Check the operation.
(1) Apply battery voltage to the front door lock and check the operation of the front door lock motor.

Standard

Measurement Condition	Specified Condition
Battery positive (+) → Terminal 4 Battery negative (-) → Terminal 2	Locks
Battery positive (+) → Terminal 2 Battery negative (-) → Terminal 4	Unlocks

If the result is not as specified, replace the front door lock.

(b) Check the resistance of the unlock detection switch.
(1) Using an ohmmeter, measure the resistance and check the results in accordance with the value(s) in the table below.

Standard Resistance

Tester Connection	Door Lock Condition	Specified Condition
7 - 8	Locked	10 kΩ or higher
7 - 8	Unlocked	Below 1 Ω

If the result is not as specified, replace the front door lock.

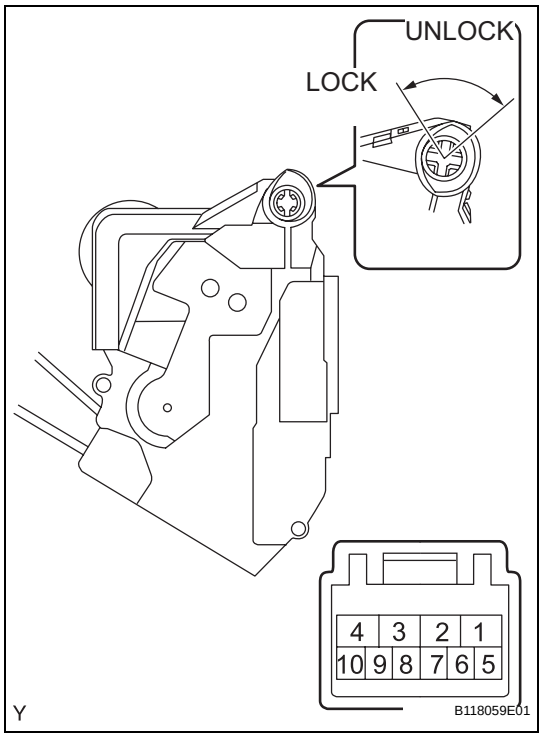

(c) Check the resistance of the door lock and unlock switch.

(1) Using an ohmmeter, measure the resistance and check the results in accordance with the value(s) in the table below.

Standard Resistance

Tester Connection	Door Lock Condition	Specified Condition
7 - 9	Locked	Below 1 Ω
7 - 9	Unlocked	10 kΩ or higher
7 - 10	Locked	10 kΩ or higher
7 - 10	Unlocked	Below 1 Ω

If the result is not as specified, replace the front door lock.

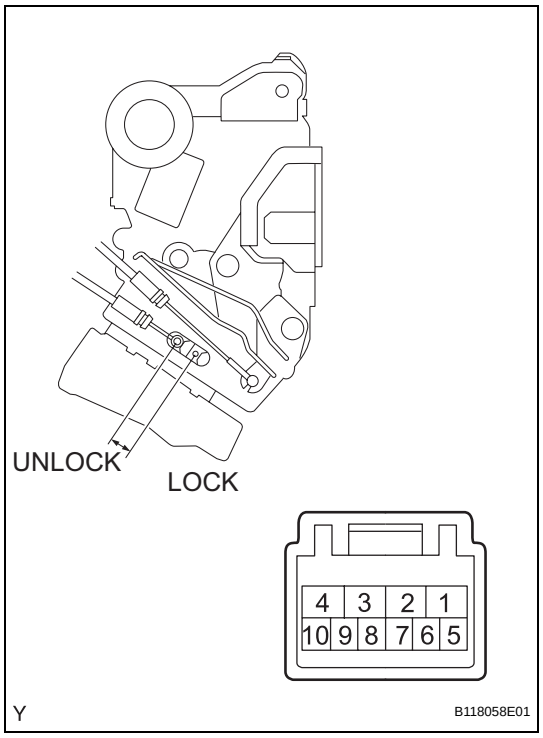

3. INSPECT FRONT DOOR LOCK ASSEMBLY RH (w/ Theft Deterrent System)

(a) Check the resistance of the unlock detection switch.

(1) Using an ohmmeter, measure the resistance and check the results in accordance with the value(s) in the table below.

Standard Resistance

Tester Connection	Door Lock Condition	Specified Condition
7 - 8	Locked	10 kΩ or higher
7 - 8	Unlocked	Below 1 Ω

If the result is not as specified, replace the front door lock.

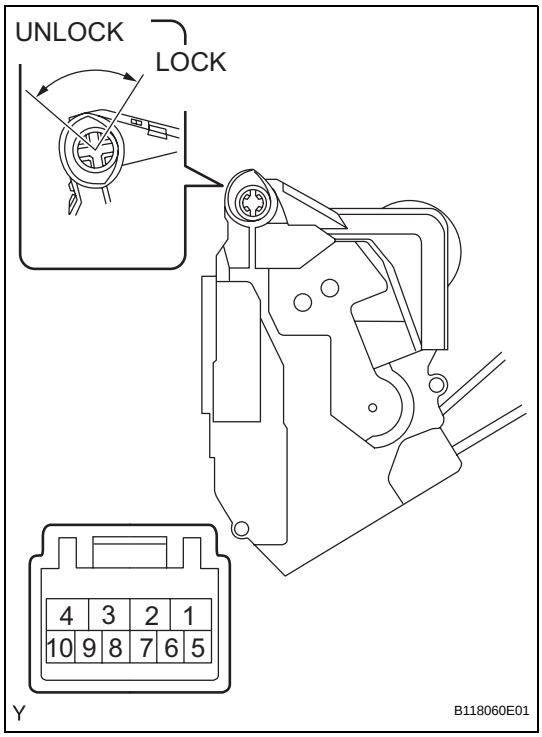

(b) Check the resistance of the door lock and unlock switch.

(1) Using an ohmmeter, measure the resistance and check the results in accordance with the value(s) in the table below.

Standard Resistance

Tester Connection	Door Lock Condition	Specified Condition
6 - 8	Locked	Below 1 Ω
6 - 8	Unlocked	10 kΩ or higher
5 - 8	Locked	10 kΩ or higher
5 - 8	Unlocked	Below 1 Ω

If the result is not as specified, replace the front door lock.

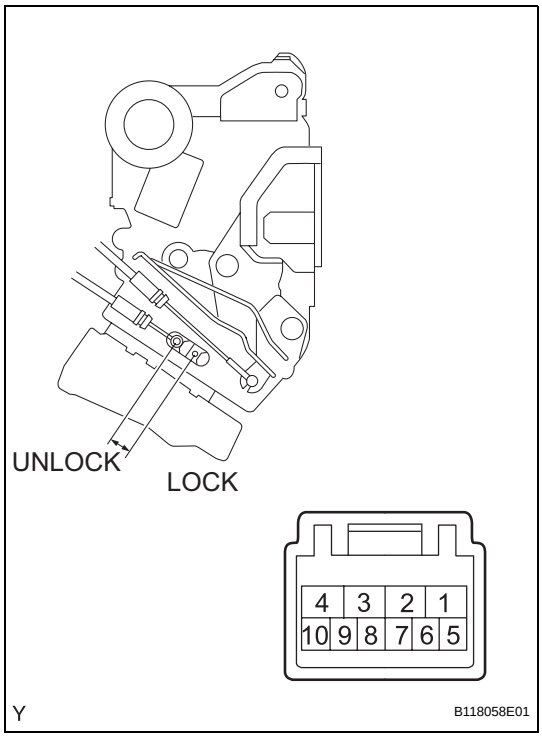

4. INSPECT FRONT DOOR LOCK ASSEMBLY RH (w/o Theft Deterrent System)

(a) Check the operation.

(1) Apply battery voltage to the front door lock and check the operation of the front door lock motor.

Standard

Measurement Condition	Specified Condition
Battery positive (+) → Terminal 3 Battery negative (-) → Terminal 1	Locks
Battery positive (+) → Terminal 1 Battery negative (-) → Terminal 3	Unlocks

If the result is not as specified, replace the front door lock.

(b) Check the resistance of the unlock detection switch.

(1) Using an ohmmeter, measure the resistance and check the results in accordance with the value(s) in the table below.

Standard Resistance

Tester Connection	Door Lock Condition	Specified Condition
6 - 7	Locked	10 kΩ or higher
6 - 7	Unlocked	Below 1 Ω

If the result is not as specified, replace the front door lock.

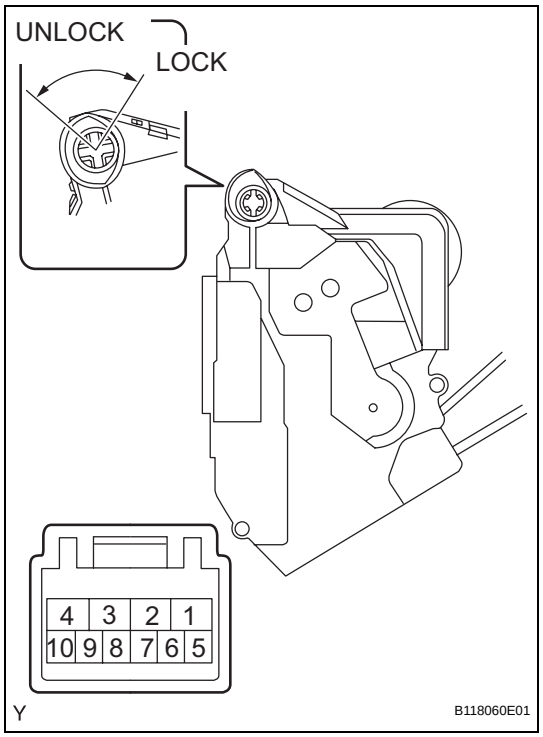

(c) Check the resistance of door lock and unlock switch.

(1) Using an ohmmeter, measure the resistance and check the results in accordance with the value(s) in the table below.

Standard Resistance

Tester Connection	Door Lock Position	Specified Condition
5 - 7	Locked	Below 1 Ω
5 - 7	Unlocked	10 kΩ or higher
4 - 7	Locked	10 kΩ or higher
4 - 7	Unlocked	Below 1 Ω

If the result is not as specified, replace the front door lock.

INSTALLATION

1. INSTALL FRONT DOOR LOCK ASSEMBLY

NOTICE:

- **If reusing a door lock that has been removed, replace the packing in the connecting part with new.**
- **Make sure that no grease and dirt adheres to the packing surface in the connecting part.**

(a) Apply MP grease to the sliding and rotating areas of the front door lock.

(b) Connect the front door lock remote control cable and the front door inside locking cable.

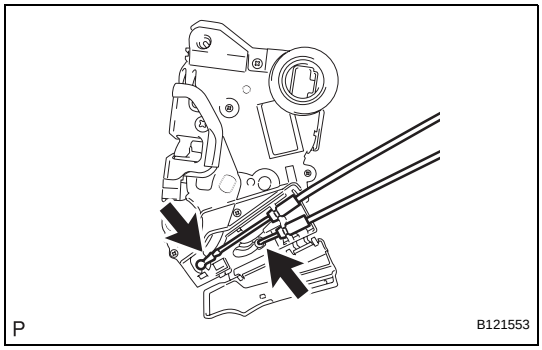

(c) Engage the 5 claws and close the cover.

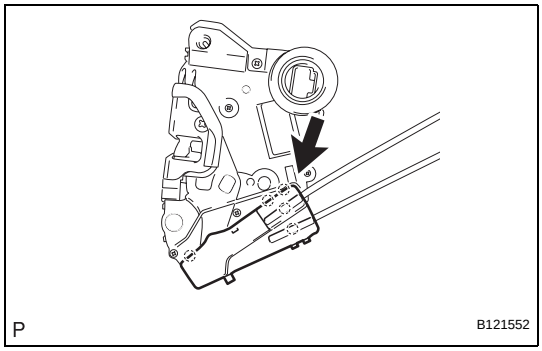

(d) Insert the door lock open rod into the front door lock, then set it to the door panel.

NOTICE:

Make sure that the outside handle link is securely engaged with the door lock.

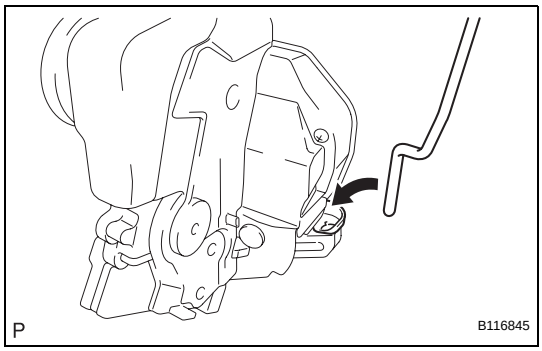

(e) Apply adhesive to the threads of the screws.

Adhesive:

Part No. 08833-00070, THREE BOND 1324 or the equivalent

(f) Using "Torx" socket wrench T30, install the front door lock with the 3 screws.

Torque: 5.0 N*m (51 kgf*cm, 44 in.*lbf)

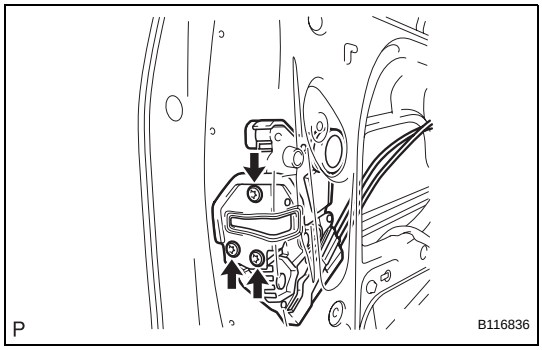

2. INSTALL FRONT DOOR OUTSIDE HANDLE COVER

(See page ED-46)

3. **INSTALL FRONT DOOR FRAME SUB-ASSEMBLY REAR LOWER (See page ED-47)**
4. **INSTALL FRONT DOOR WEATHERSTRIP (See page ED-47)**
5. **INSTALL FRONT DOOR CHECK ASSEMBLY (See page ED-48)**
6. **INSTALL FRONT DOOR WINDOW REGULATOR SUB-ASSEMBLY (w/ Power Window) (See page ED-48)**
7. **INSTALL FRONT DOOR WINDOW REGULATOR SUB-ASSEMBLY (w/o Power Window) (See page ED-71)**
8. **INSTALL FRONT DOOR GLASS RUN (See page ED-49)**
9. **INSTALL FRONT DOOR GLASS SUB-ASSEMBLY (See page ED-49)**
10. **INSTALL FRONT DOOR SERVICE HOLE COVER (See page ED-50)**
11. **INSTALL FRONT DOOR BELT MOULDING (See page ET-92)**
12. **INSTALL OUTER REAR VIEW MIRROR ASSEMBLY (See page MI-16)**
13. **INSTALL FRONT DOOR WINDOW FRAME REAR MOULDING (for 3 Door) (See page ET-114)**
14. **INSTALL FRONT DOOR WINDOW FRAME FRONT MOULDING (See page ET-115)**
15. **INSTALL FRONT DOOR TRIM BOARD SUB-ASSEMBLY (See page ED-51)**
16. **INSTALL FRONT ARMREST BASE PANEL UPPER (See page ED-53)**
17. **INSTALL DOOR ARMREST COVER (See page ED-53)**
18. **INSTALL DOOR WINDOW REGULATOR HANDLE ASSEMBLY (w/o Power Window) (See page ED-75)**
19. **CONNECT CABLE TO NEGATIVE BATTERY TERMINAL**
    Torque: 5.4 N*m (55 kgf*cm, 48 in.*lbf)

REAR DOOR LOCK (for Sedan)

COMPONENTS

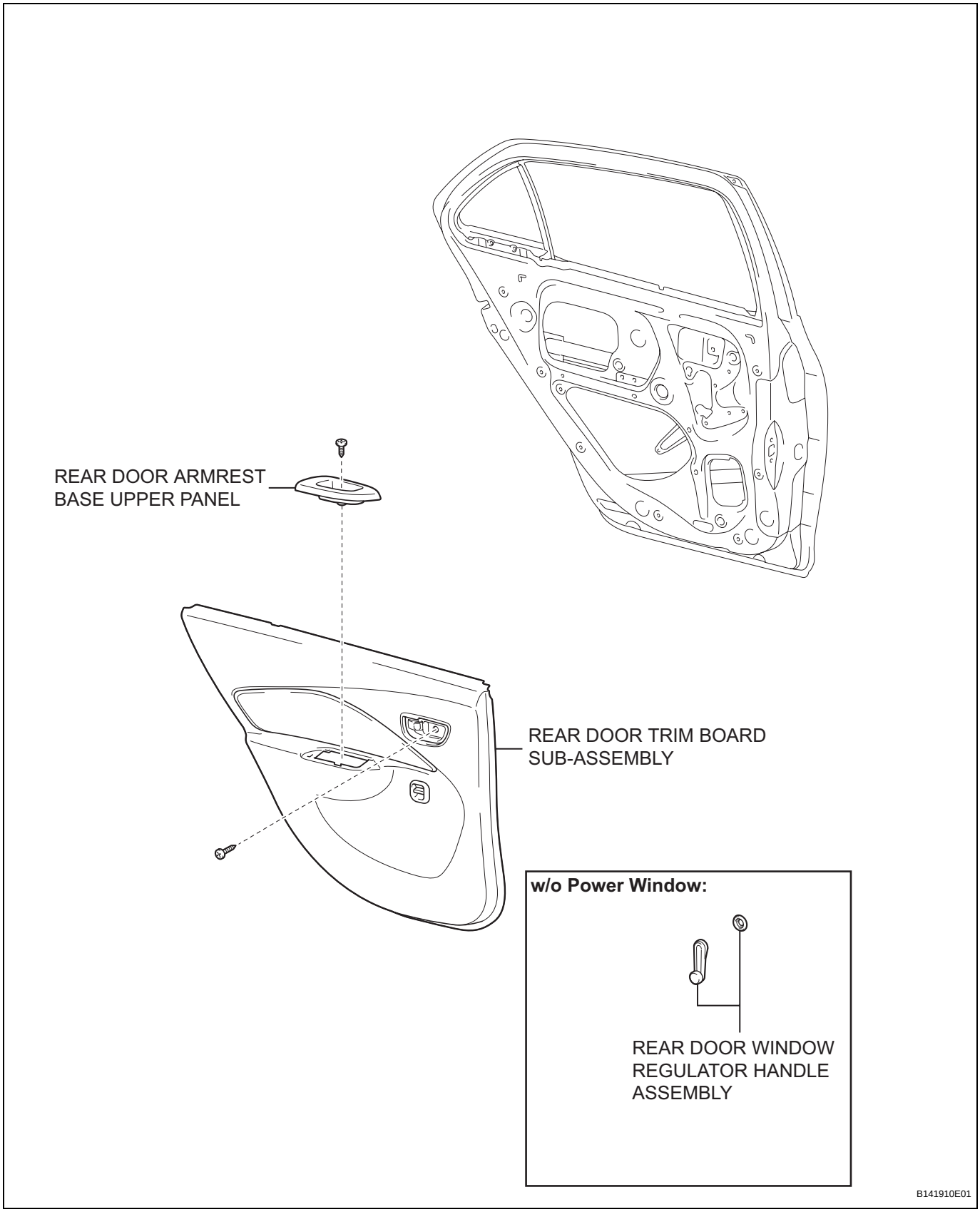

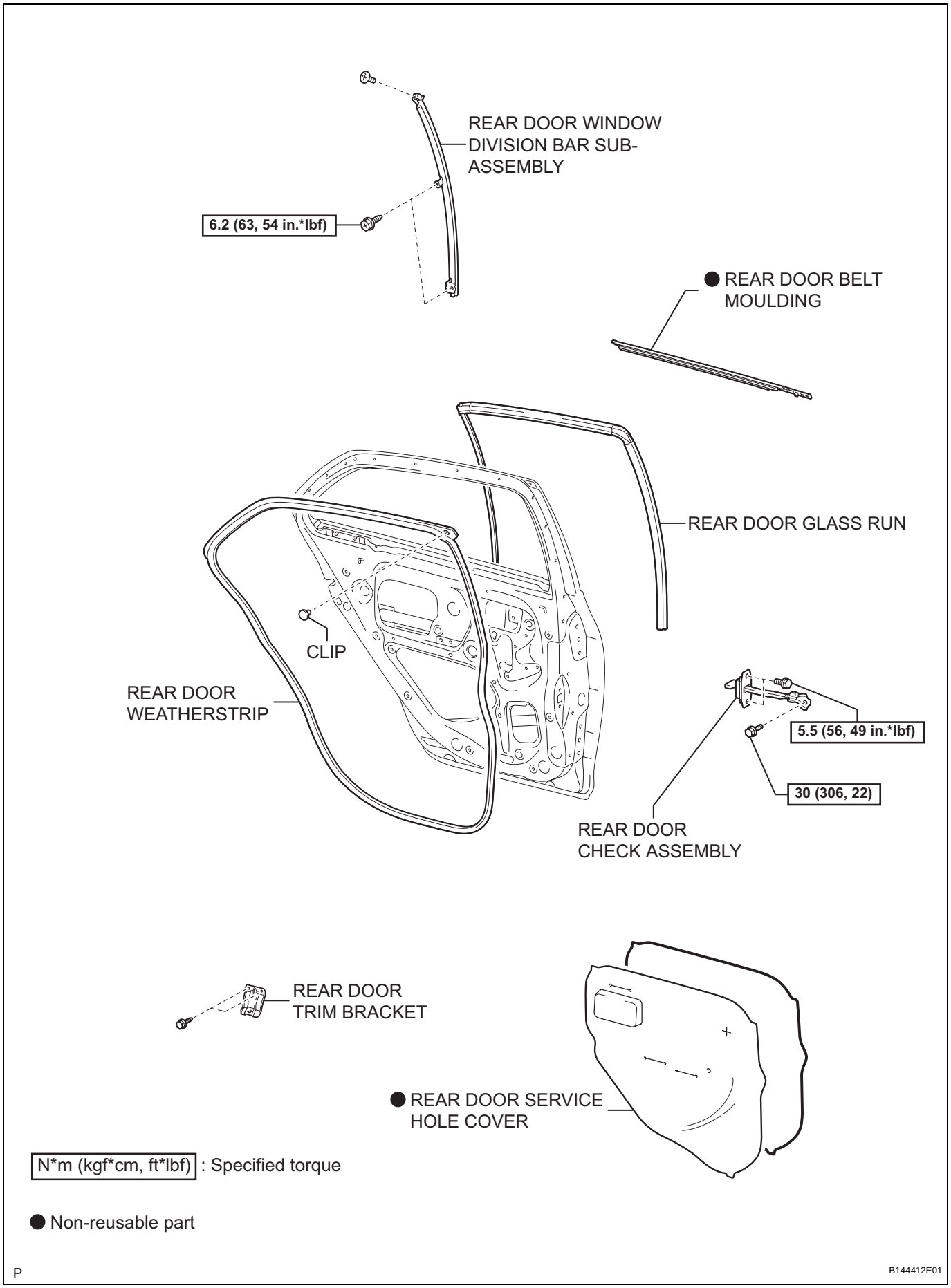
REAR DOOR WINDOW DIVISION BAR SUB-ASSEMBLY
6.2 (63, 54 in.*lbf)
● REAR DOOR BELT MOULDING
REAR DOOR GLASS RUN
CLIP
REAR DOOR WEATHERSTRIP
5.5 (56, 49 in.*lbf)
30 (306, 22)
REAR DOOR CHECK ASSEMBLY
REAR DOOR TRIM BRACKET
● REAR DOOR SERVICE HOLE COVER
N*m (kgf*cm, ft*lbf) : Specified torque
● Non-reusable part
P
B144412E01

DL

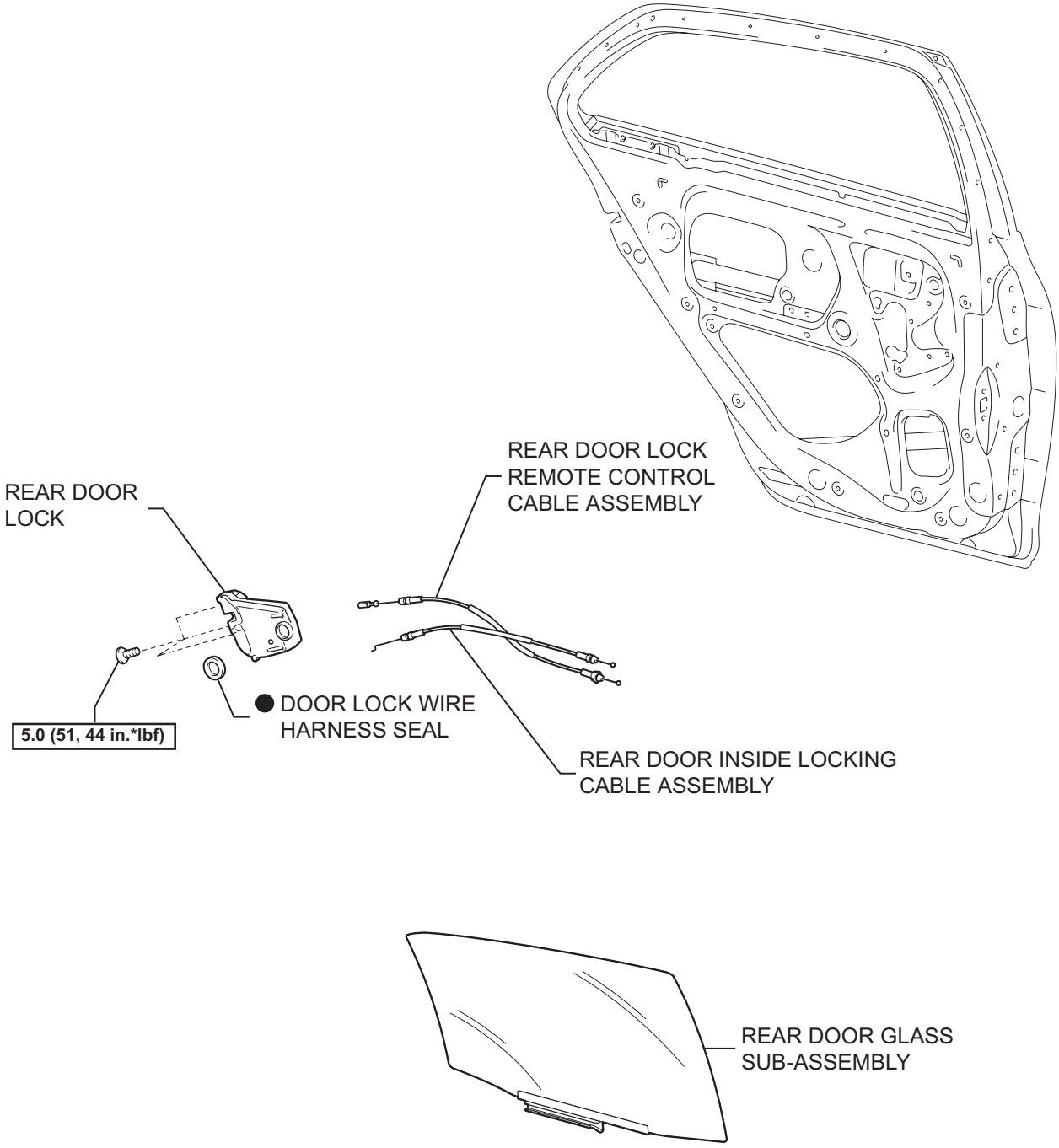

N*m (kgf*cm, ft*lbf) : Specified torque

● Non-reusable part

P

B140696E01

REMOVAL

HINT:
- Use the same procedure for both the RH and LH sides.
- The procedure described below is for the LH side.

1. **DISCONNECT CABLE FROM NEGATIVE BATTERY TERMINAL**
2. **REMOVE REAR DOOR WINDOW REGULATOR HANDLE ASSEMBLY (w/o Power Window) (See page ED-79)**
3. **REMOVE REAR DOOR ARMREST BASE UPPER PANEL (See page ED-79)**
4. **REMOVE REAR DOOR TRIM BOARD SUB-ASSEMBLY (See page ED-79)**
5. **REMOVE REAR DOOR TRIM BRACKET (See page ED-80)**
6. **REMOVE REAR DOOR SERVICE HOLE COVER (See page ED-80)**
7. **REMOVE REAR DOOR CHECK ASSEMBLY (See page ED-81)**
8. **REMOVE REAR DOOR WEATHERSTRIP (See page ED-81)**
9. **REMOVE REAR DOOR BELT MOULDING (See page ET-95)**
10. **REMOVE REAR DOOR GLASS RUN (See page ED-81)**
11. **REMOVE REAR DOOR WINDOW DIVISION BAR SUB-ASSEMBLY (See page ED-81)**
12. **REMOVE REAR DOOR GLASS SUB-ASSEMBLY (See page ED-82)**
13. **REMOVE REAR DOOR LOCK**
    (a) Using "Torx" socket wrench T30, remove the 3 screws.
    NOTICE:
    Do not drop or damage the rear door lock when removing the screws.
    (b) Move the rear door lock downward, remove the outside handle frame release plate and remove the rear door lock.
    HINT:
    Remove the rear door lock through the service hole.

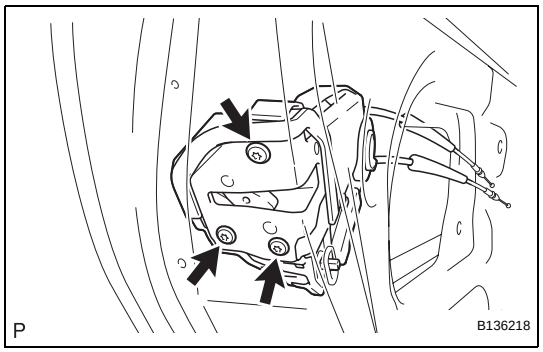

DL

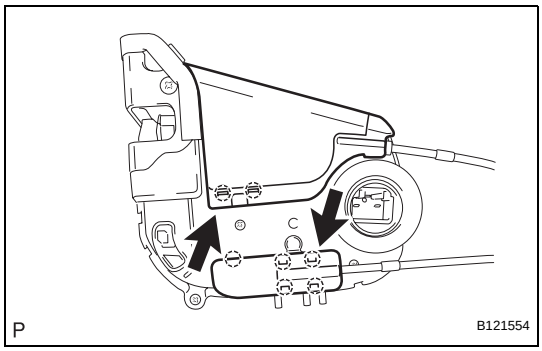

(c) Open the 2 covers.

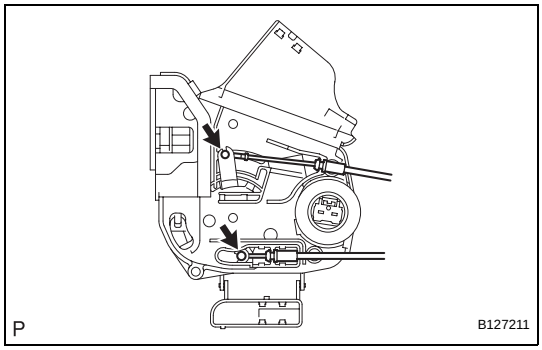

(d) Disconnect the rear door lock remote control cable and rear door inside locking cable.
(e) Remove the door lock wire harness seal.

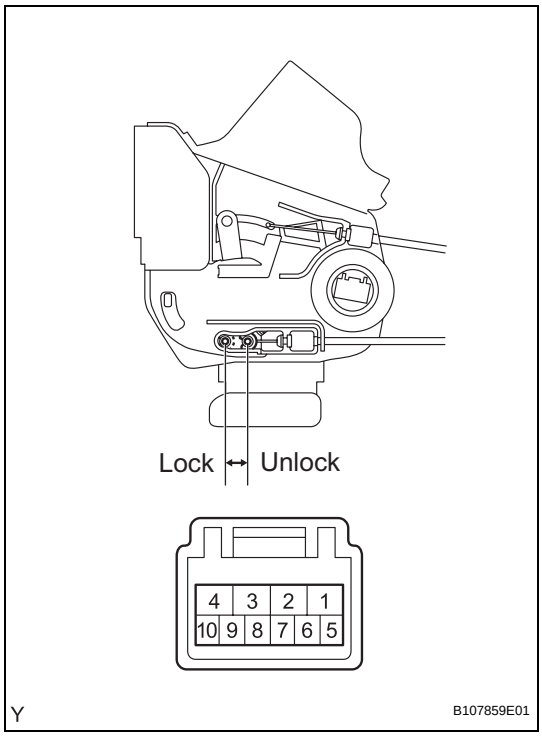

INSPECTION

1. INSPECT REAR DOOR LOCK ASSEMBLY LH

(a) w/ Power door lock:
Check the operation.
(1) Apply battery voltage to the rear door lock and check the operation of the door lock motor.
Standard

Measurement Condition	Specified Condition
Battery positive (+) → Terminal 4 Battery negative (-) → Terminal 1	**Locks**
Battery positive (+) → Terminal 1 Battery negative (-) → Terminal 4	**Unlocks**

If the result is not as specified, replace the rear door lock.

(b) Check the resistance of the unlock detection switch.
(1) Using an ohmmeter, measure the resistance and check the results in accordance with the value(s) in the table below.
Standard Resistance

Tester Connection	Door Lock Condition	Specified Condition
6 - 9	**Locked**	**10 kΩ or higher**
6 - 9	**Unlocked**	**Below 1 Ω**

If the result is not as specified, replace the rear door lock.

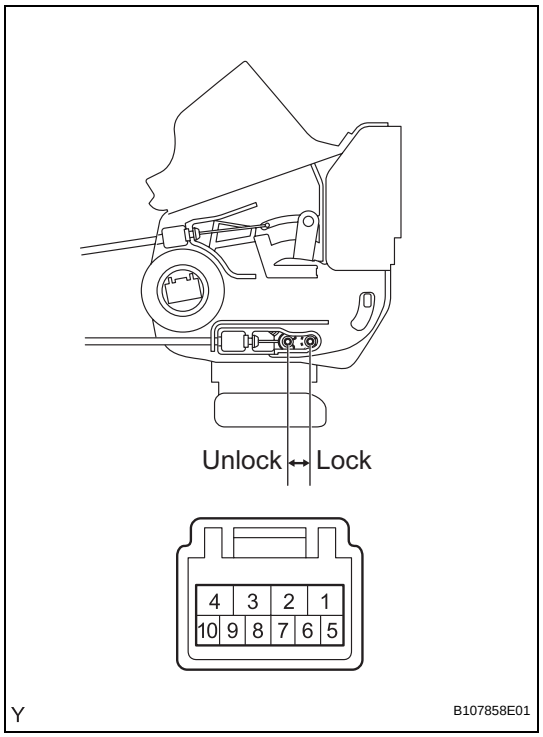

2. INSPECT REAR DOOR LOCK ASSEMBLY RH

(a) w/ Power door lock:
Check the operation.

(1) Apply battery voltage to the rear door lock and check the operation of the door lock motor.

Standard

Measurement Condition	Specified Condition
Battery positive (+) → Terminal 4 Battery negative (-) → Terminal 1	Locks
Battery positive (+) → Terminal 1 Battery negative (-) → Terminal 4	Unlocks

If the result is not as specified, replace the rear door lock.

(b) Check the resistance of the unlock detection switch.

(1) Using an ohmmeter, measure the resistance and check the results in accordance with the value(s) in the table below.

Standard Resistance

Tester Connection	Door Lock Condition	Specified Condition
6 - 9	Locked	10 kΩ or higher
6 - 9	Unlocked	Below 1 Ω

If the result is not as specified, replace the rear door lock.

INSTALLATION

1. **INSTALL REAR DOOR LOCK**
   NOTICE:
   - **If reusing a door lock that has been removed, replace the packing in the connecting part with new.**
   - **Make sure that no grease or dirt adheres to the packing surface in the connecting part.**

   (a) Apply MP grease to the sliding and rotating areas of the front door lock.

   (b) Connect the rear door lock remote control cable and rear door inside locking cable.

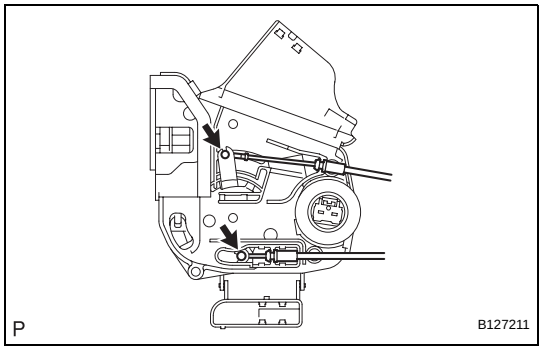

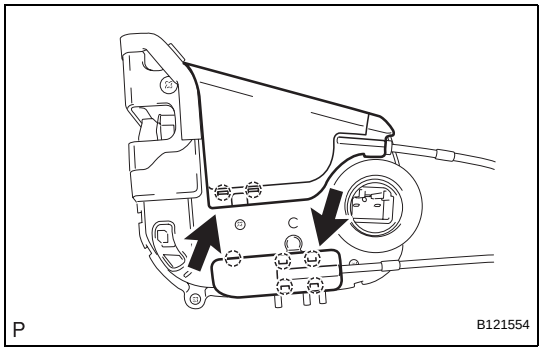

   (c) Close the 2 covers.
   (d) Insert the door lock into the outside handle frame release plate, then set it onto the door panel.
   (e) Make sure that the outside handle frame link is securely engaged with the door lock.
   (f) Apply adhesive to the threads of the screws.
   Adhesive:
   Toyota Genuine Adhesive 1324, Three Bond 1324 or the equivalent.

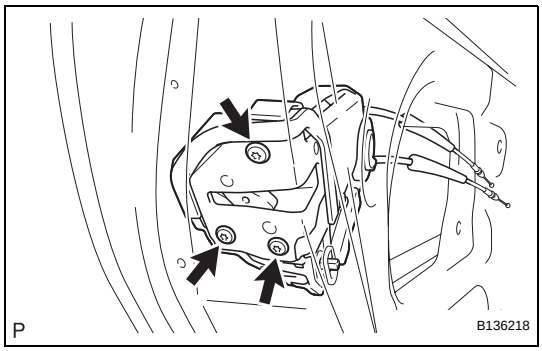

   (g) Using "Torx" socket wrench T30, install the rear door lock with the 3 screws.
   Torque: 5.0 N*m (51 kgf*cm, 44 in.*lbf)

2. **INSTALL REAR DOOR GLASS SUB-ASSEMBLY (See page ED-90)**
3. **INSTALL REAR DOOR WINDOW DIVISION BAR SUB-ASSEMBLY (See page ED-91)**
4. **INSTALL REAR DOOR GLASS RUN (See page ED-91)**
5. **INSTALL REAR DOOR BELT MOULDING (See page ET-95)**
6. **INSTALL REAR DOOR WEATHERSTRIP (See page ED-92)**
7. **INSTALL REAR DOOR CHECK ASSEMBLY (See page ED-92)**
8. **INSTALL REAR DOOR SERVICE HOLE COVER (See page ED-92)**
9. **INSTALL REAR DOOR TRIM BRACKET (See page ED-93)**

10. **INSTALL REAR DOOR TRIM BOARD SUB-ASSEMBLY (See page ED-93)**
11. **INSTALL REAR DOOR ARMREST BASE UPPER PANEL (See page ED-94)**
12. **INSTALL REAR DOOR WINDOW REGULATOR HANDLE ASSEMBLY (w/o Power Window) (See page ED-94)**
13. **CONNECT CABLE TO NEGATIVE BATTERY TERMINAL**
    Torque: 5.4 N*m (55 kgf*cm, 48 in.*lbf)

REAR DOOR LOCK (for Hatchback)

COMPONENTS

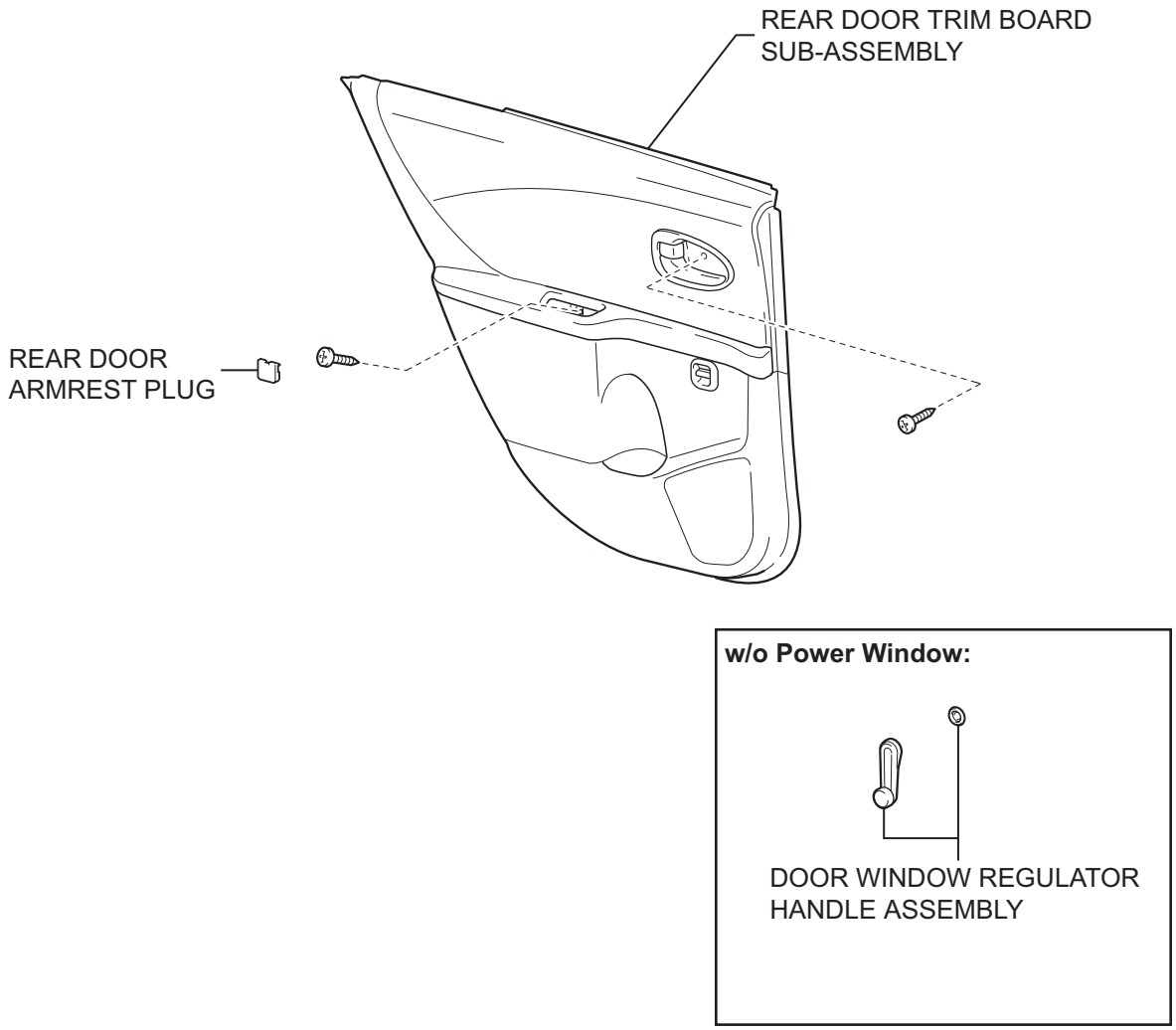

P

B116982E01

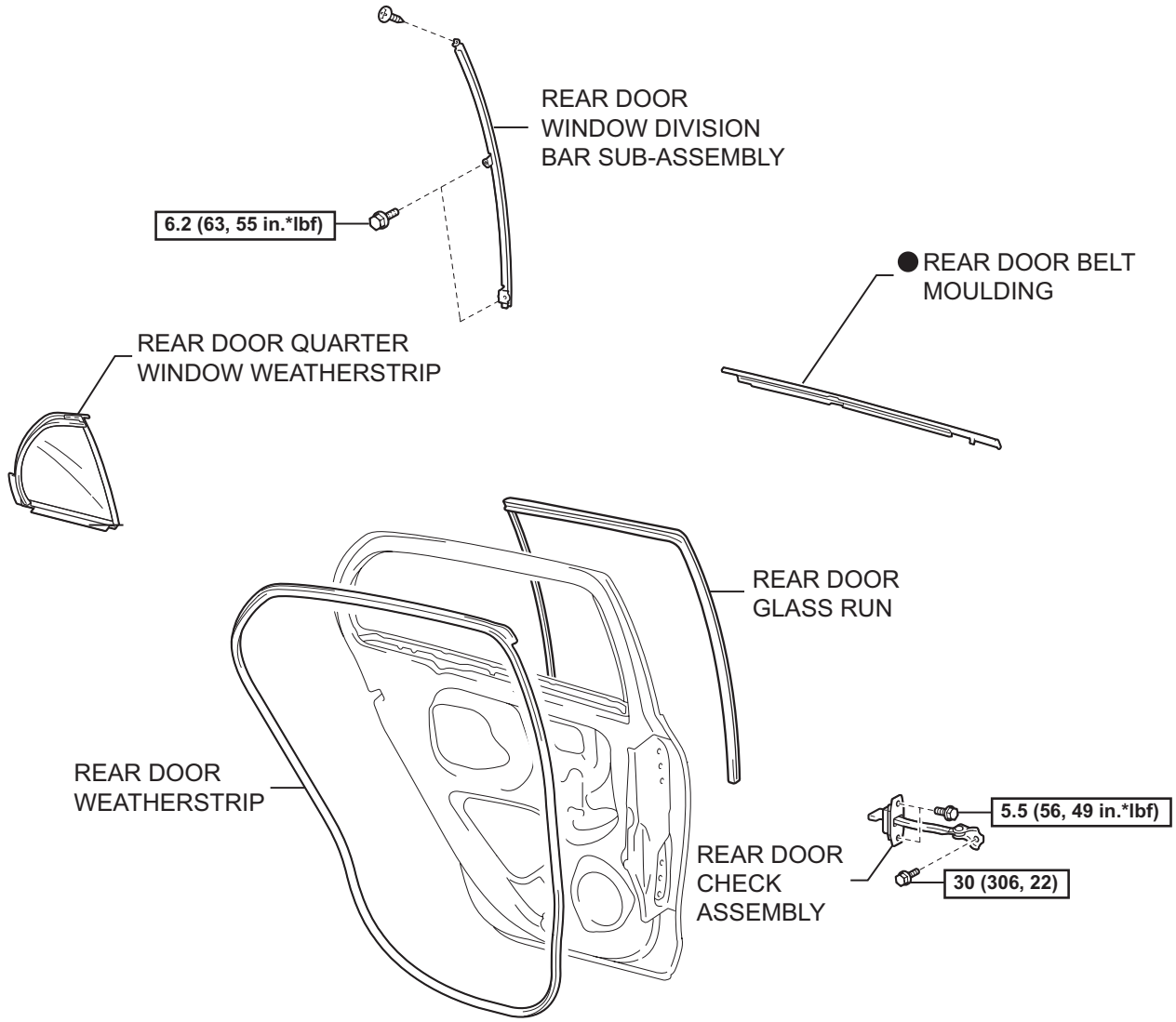

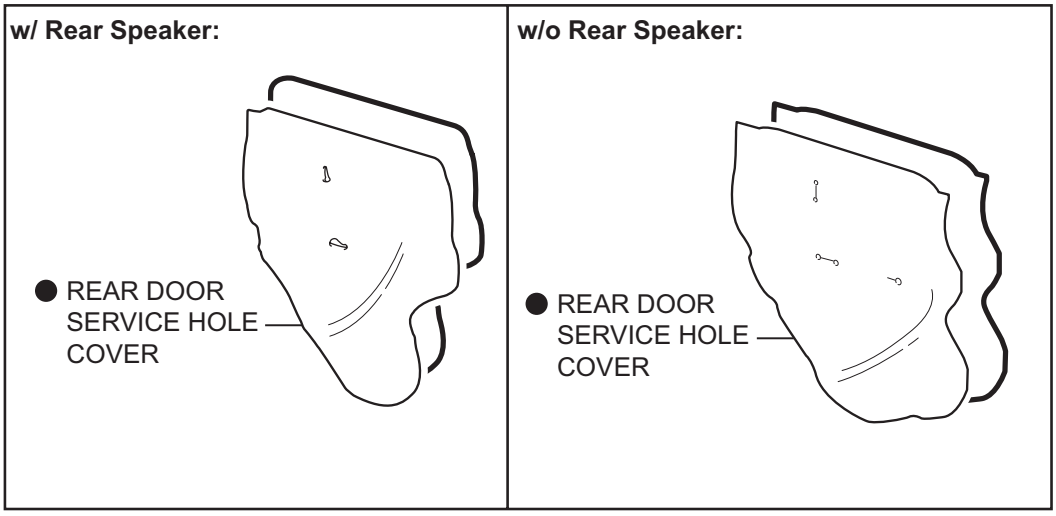

N*m (kgf*cm, ft*lbf) : Specified torque

● Non-reusable part

P

B116983E01

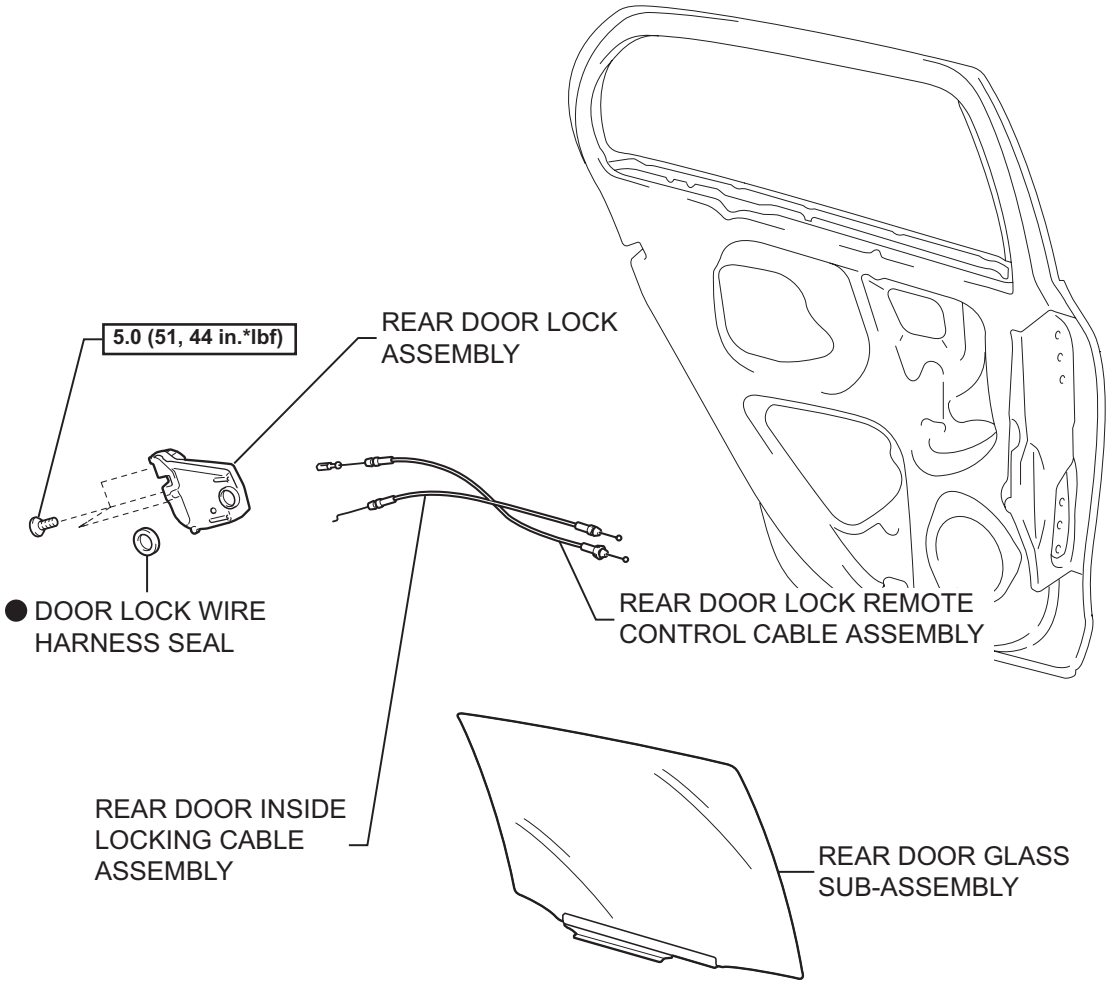

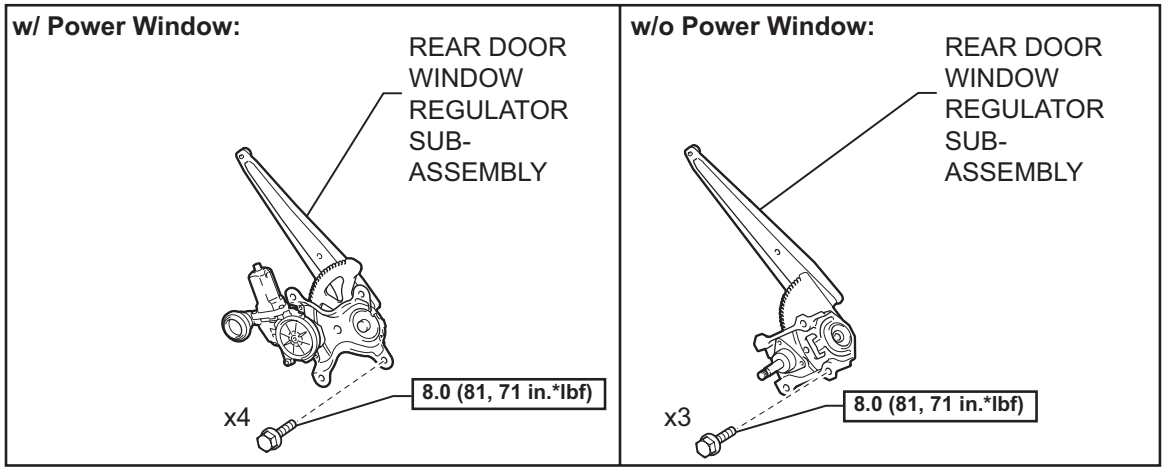

N*m (kgf*cm, ft*lbf) : Specified torque

● Non-reusable part

P

B118030E01

DL

REMOVAL

HINT:
- Use the same procedure for both the RH and LH sides.
- The procedure listed below is for the LH side.

1. **DISCONNECT CABLE FROM NEGATIVE BATTERY TERMINAL**
2. **REMOVE DOOR WINDOW REGULATOR HANDLE ASSEMBLY (w/o Power Window) (See page ED-115)**
3. **REMOVE REAR DOOR TRIM BOARD SUB-ASSEMBLY (See page ED-98)**
4. **REMOVE REAR DOOR SERVICE HOLE COVER (See page ED-99)**
5. **REMOVE REAR DOOR CHECK ASSEMBLY (See page ED-99)**
6. **REMOVE REAR DOOR WEATHERSTRIP (See page ED-100)**
7. **REMOVE REAR DOOR BELT MOULDING (See page ET-97)**
8. **REMOVE REAR DOOR GLASS RUN (See page ED-100)**
9. **REMOVE REAR DOOR WINDOW DIVISION BAR SUB-ASSEMBLY (See page ED-100)**
10. **REMOVE REAR DOOR QUARTER WINDOW WEATHERSTRIP (See page ED-100)**
11. **REMOVE REAR DOOR GLASS SUB-ASSEMBLY (See page ED-101)**
12. **REMOVE REAR DOOR WINDOW REGULATOR SUB-ASSEMBLY (w/ Power Window) (See page ED-101)**
13. **REMOVE REAR DOOR WINDOW REGULATOR SUB-ASSEMBLY (w/o Power Window) (See page ED-118)**
14. **REMOVE REAR DOOR LOCK ASSEMBLY**
    (a) Using "Torx" socket wrench T30, remove the 3 screws.
    (b) Move the rear door lock downward, remove the outside handle frame release plate and remove the rear door lock.

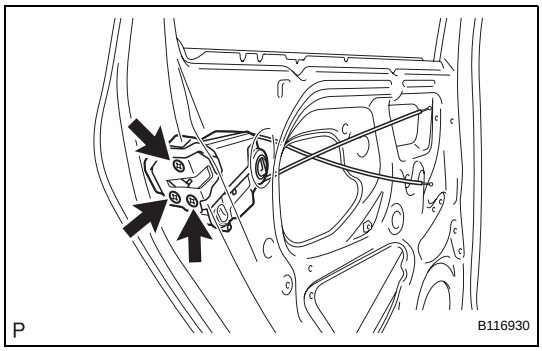

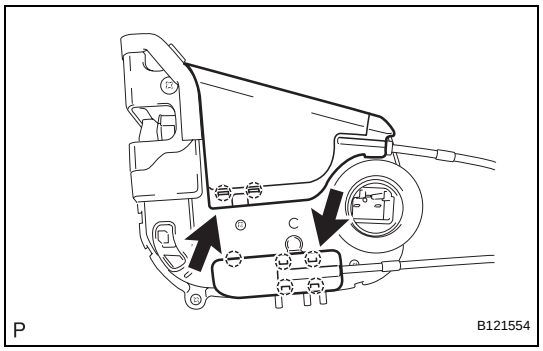

(c) Disengage the 7 claws and open the 2 covers.

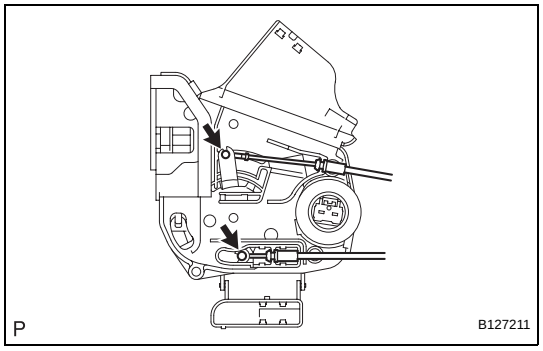

(d) Disconnect the rear door lock remote control cable and the rear door inside locking cable.
(e) Remove the door lock wire harness seal.

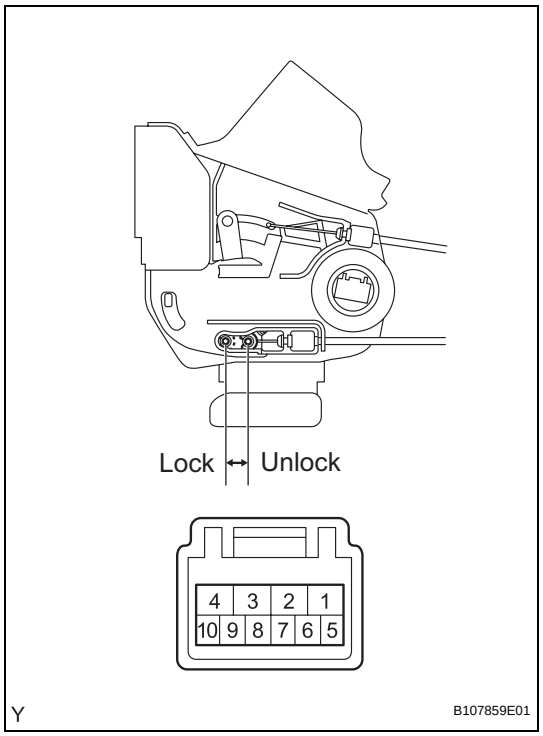

INSPECTION

1. INSPECT REAR DOOR LOCK ASSEMBLY LH

(a) Check the operation.

(1) Apply battery voltage to the rear door lock and check the operation of the door lock motor.

Standard

Measurement Condition	Specified Condition
Battery positive (+) → Terminal 4 Battery negative (-) → Terminal 1	**Locks**
Battery positive (+) → Terminal 1 Battery negative (-) → Terminal 4	**Unlocks**

If the result is not as specified, replace the rear door lock.

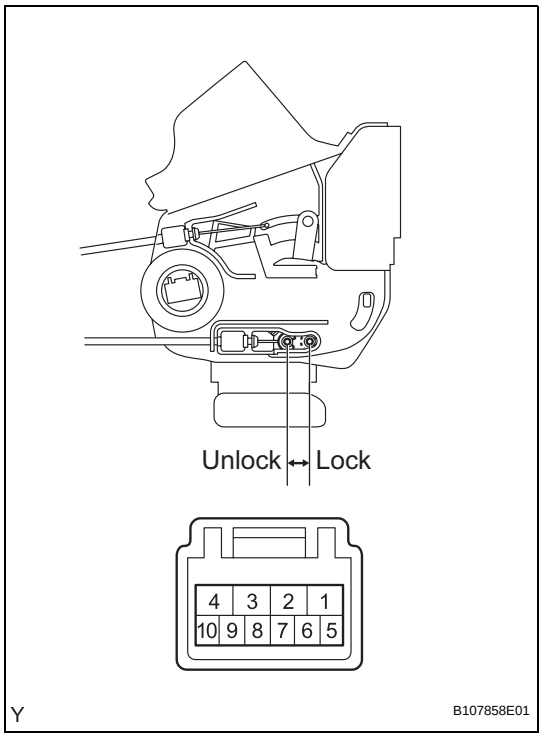

2. INSPECT REAR DOOR LOCK ASSEMBLY RH

(a) Check the operation.

(1) Apply battery voltage to the rear door lock and check the operation of the door lock motor.

Standard

Measurement Condition	Specified Condition
Battery positive (+) → Terminal 4 Battery negative (-) → Terminal 1	**Locks**
Battery positive (+) → Terminal 1 Battery negative (-) → Terminal 4	**Unlocks**

If the result is not as specified, replace the rear door lock.

INSTALLATION

1. **INSTALL REAR DOOR LOCK ASSEMBLY**
   NOTICE:
   - **If reusing a door lock that has been removed, replace the packing in the connecting part with new.**
   - **Make sure that no grease and dirt adheres to the packing surface in the connecting part.**

   (a) Apply MP grease to the sliding and rotating areas of the front door lock.

   (b) Connect the rear door lock remote control cable and the rear door inside locking cable.

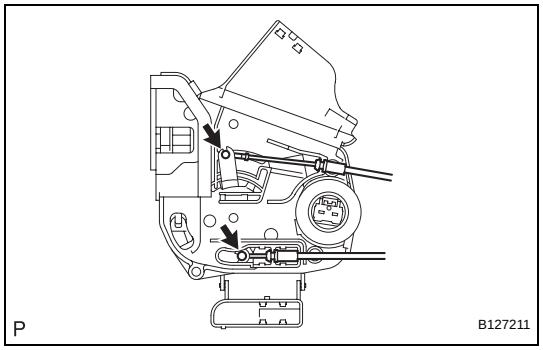

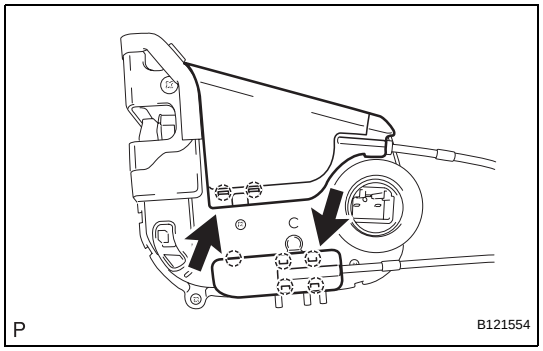

   (c) Engage the 7 claws and close the 2 covers.

   (d) Insert the door lock into the outside handle frame release plate, then set it onto the door panel.

   (e) Make sure that the outside handle frame link is securely engaged with the door lock.

   (f) Apply adhesive to the threads of the screws.
   Adhesive:
   Part No. 08833-00070, THREE BOND 1324 or the equivalent

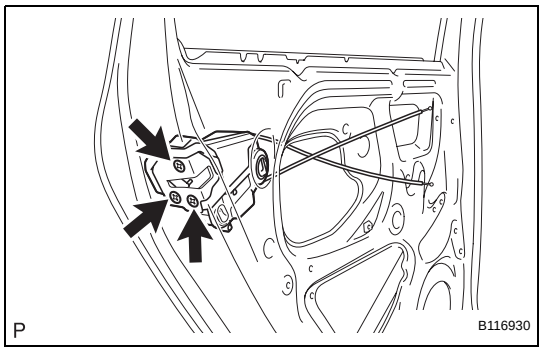

   (g) Using "Torx" socket wrench T30, install the rear door lock with the 3 screws.
   Torque: 5.0 N*m (51 kgf*cm, 44 in.*lbf)

2. **INSTALL REAR DOOR WINDOW REGULATOR SUB-ASSEMBLY (w/ Power Window) (See page ED-108)**

3. **INSTALL REAR DOOR WINDOW REGULATOR SUB-ASSEMBLY (w/o Power Window) (See page ED-124)**

4. **INSTALL REAR DOOR GLASS SUB-ASSEMBLY (See page ED-108)**

5. **INSTALL REAR DOOR QUARTER WINDOW WEATHERSTRIP (See page ED-108)**

6. **INSTALL REAR DOOR WINDOW DIVISION BAR SUB-ASSEMBLY (See page ED-108)**

7. **INSTALL REAR DOOR GLASS RUN (See page ED-109)**

8. **INSTALL REAR DOOR BELT MOULDING (See page ET-97)**

9. **INSTALL REAR DOOR WEATHERSTRIP (See page ED-109)**
10. **INSTALL REAR DOOR CHECK ASSEMBLY (See page ED-109)**
11. **INSTALL REAR DOOR SERVICE HOLE COVER (See page ED-110)**
12. **INSTALL REAR DOOR TRIM BOARD SUB-ASSEMBLY (See page ED-111)**
13. **INSTALL DOOR WINDOW REGULATOR HANDLE ASSEMBLY (w/o Power Window) (See page ED-128)**
14. **CONNECT CABLE TO NEGATIVE BATTERY TERMINAL**
    Torque: 5.4 N*m (55 kgf*cm, 48 in.*lbf)

BACK DOOR LOCK (for Hatchback)

COMPONENTS

w/ Theft Deterrent System:

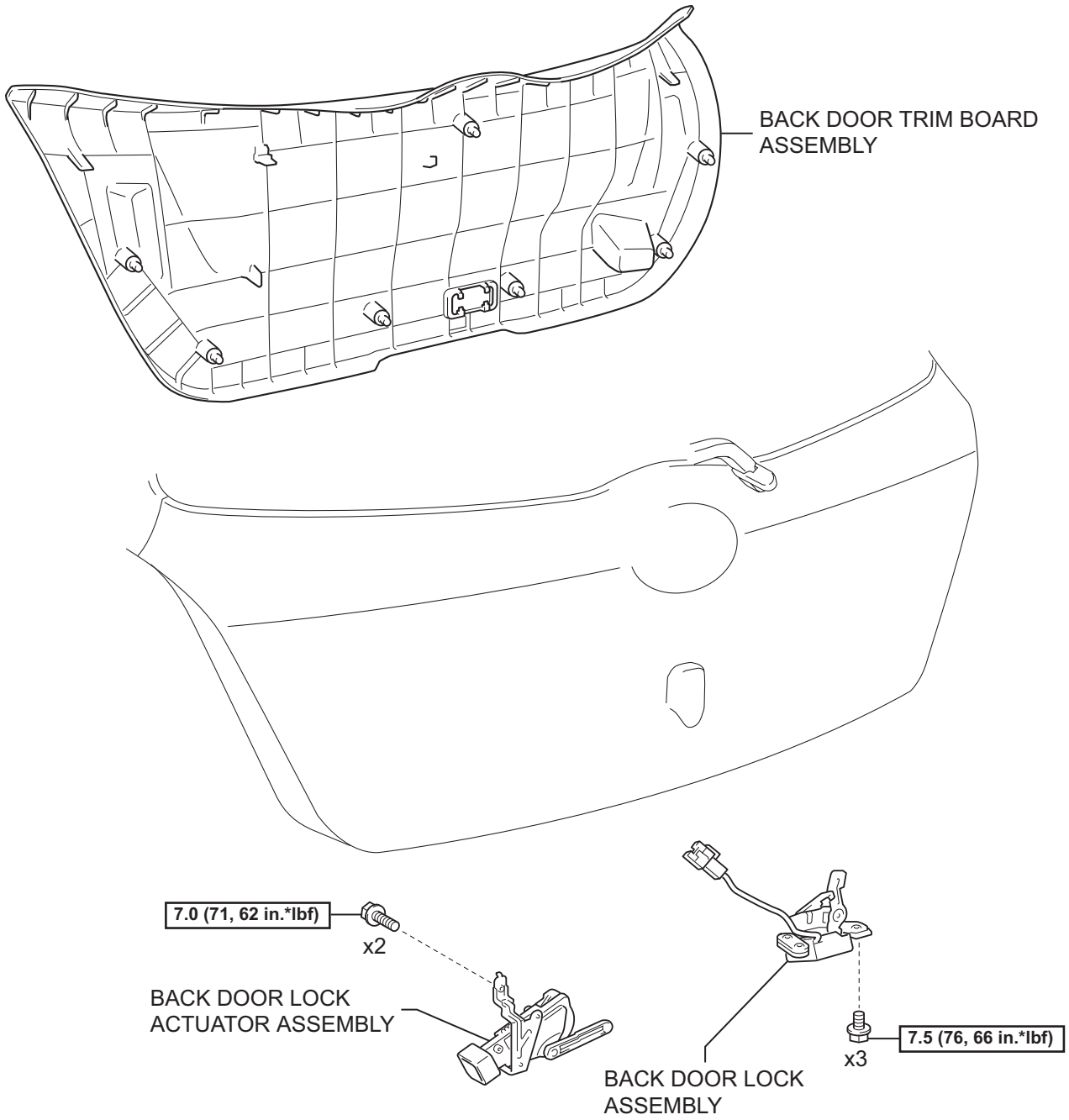

N*m (kgf*cm, ft*lbf) : Specified torque

Y

B121526E01

w/o Theft Deterrent System:

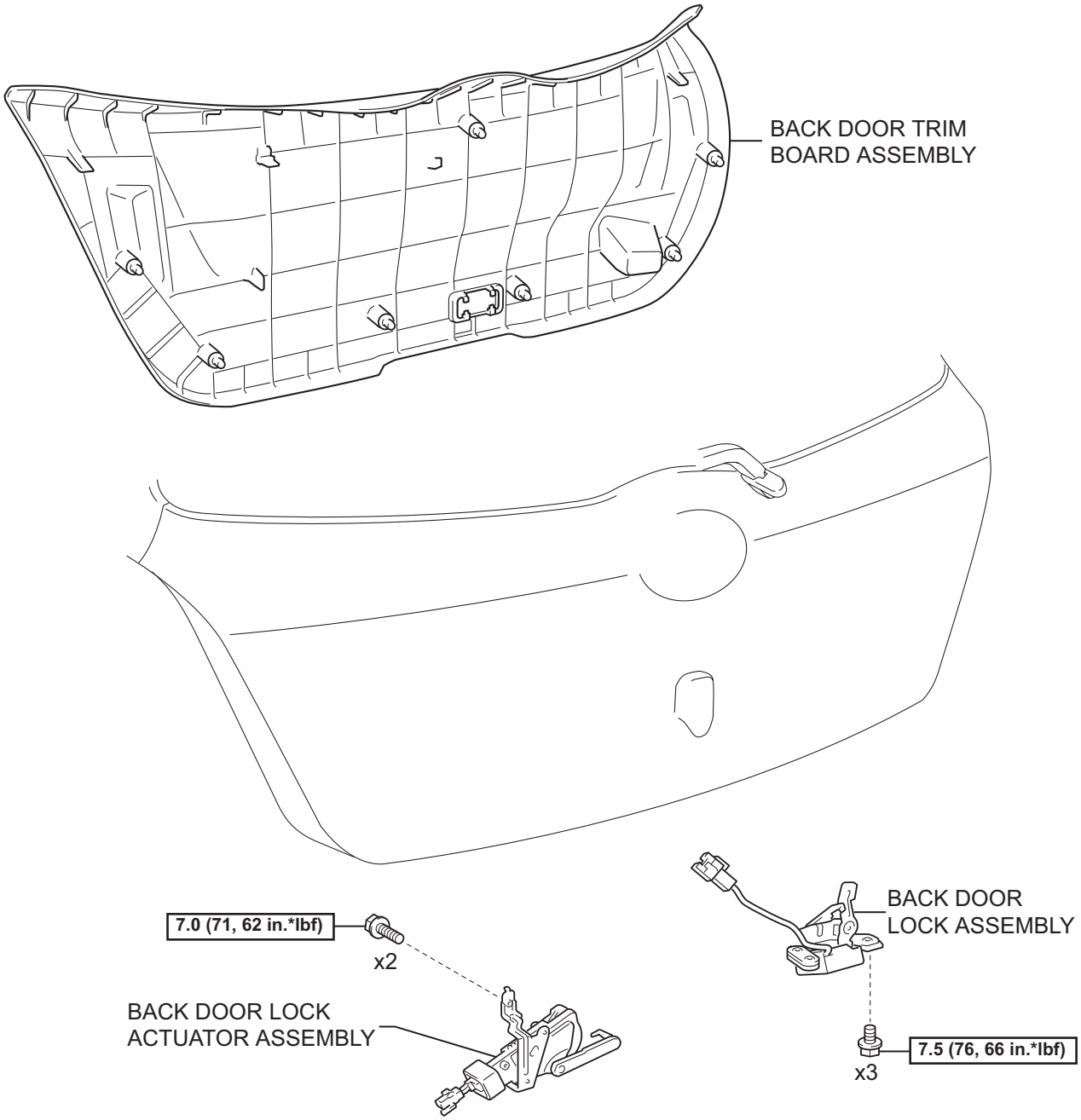

N*m (kgf*cm, ft*lbf) : Specified torque

Y

B118039E02

REMOVAL

1. DISCONNECT CABLE FROM NEGATIVE BATTERY TERMINAL

2. REMOVE BACK DOOR TRIM BOARD ASSEMBLY (See page ED-142)

3. REMOVE BACK DOOR LOCK ASSEMBLY

(a) Disconnect the connector and the clamp.
(b) Remove the 3 bolts and the back door lock.

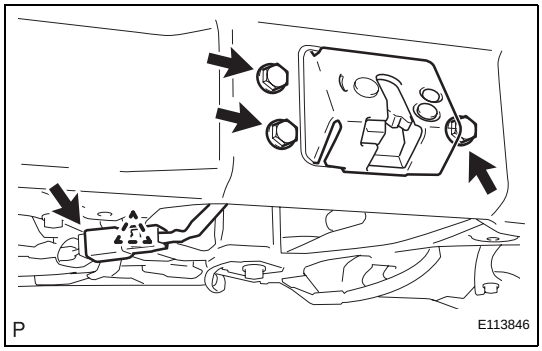

4. REMOVE BACK DOOR LOCK ACTUATOR ASSEMBLY

(a) Disconnect the connector.
(b) Remove the 2 bolts and the back door lock actuator.

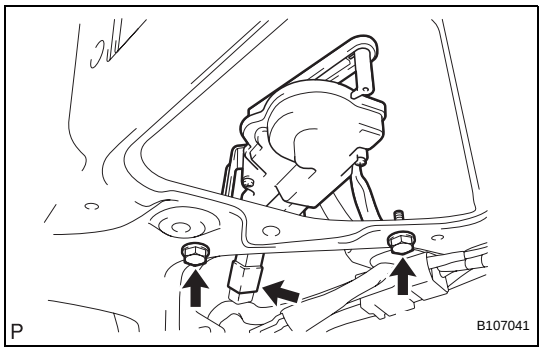

INSPECTION

1. INSPECT BACK DOOR LOCK ACTUATOR ASSEMBLY (w/ Theft Deterrent System)

(a) Check the resistance of the unlock detection switch.
(1) Using an ohmmeter, measure the resistance and check the results in accordance with the value(s) in the tables below.

Standard Resistance

Tester Connection	Door Lock Condition	Specified Condition
1 - 2	Unlocked	Below 1 Ω
1 - 2	Locked	10 kΩ or higher

If the result is not as specified, replace the back door lock actuator.

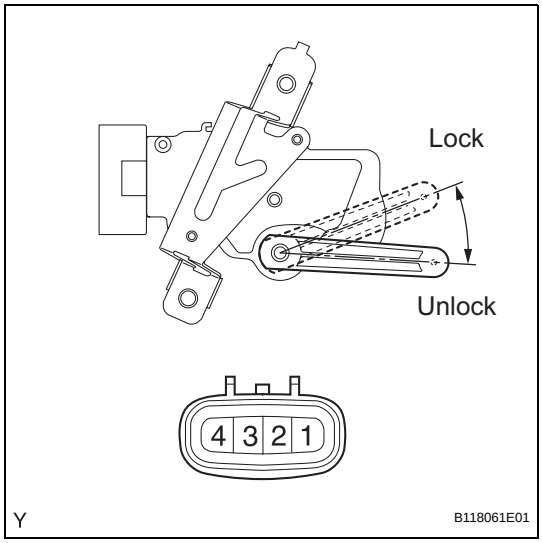

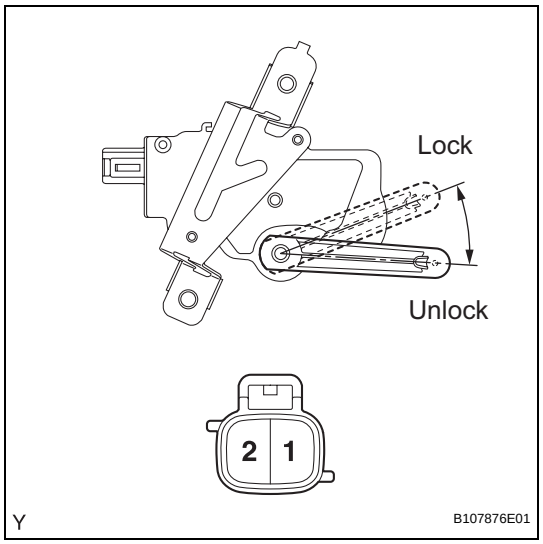

2. INSPECT BACK DOOR LOCK ACTUATOR ASSEMBLY (w/o Theft Deterrent System)

(a) Check the operation.

(1) Apply battery voltage to the back door lock actuator and check the operation of the back door lock motor.

Standard

Measurement Condition	Specified Condition
Battery positive (+) → Terminal 2 Battery negative (-) → Terminal 1	Unlocks
Battery positive (+) → Terminal 1 Battery negative (-) → Terminal 2	Locks

If the result is not as specified, replace the back door lock actuator.

INSTALLATION

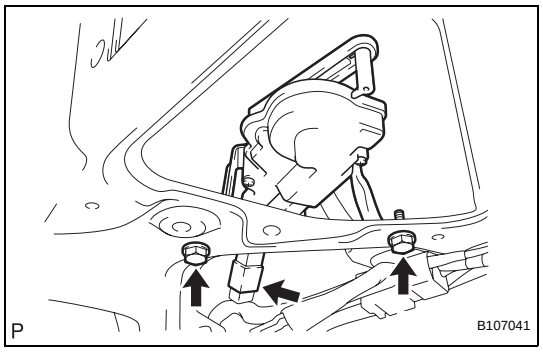

1. INSTALL BACK DOOR LOCK ACTUATOR ASSEMBLY

(a) Install the back door lock actuator with the 2 bolts.
Torque: 7.0 N*m (71 kgf*cm, 62 in.*lbf)

(b) Connect the connector.

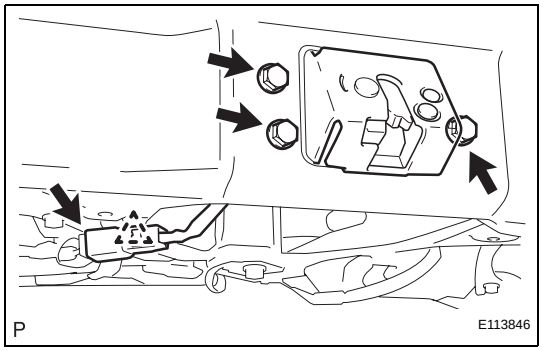

2. INSTALL BACK DOOR LOCK ASSEMBLY

(a) Install the back door lock with the 3 bolts.
Torque: 7.5 N*m (76 kgf*cm, 66 in.*lbf)

(b) Connect the connector and clamp.

3. INSTALL BACK DOOR TRIM BOARD ASSEMBLY (See page ED-146)

4. CONNECT CABLE TO NEGATIVE BATTERY TERMINAL
Torque: 5.4 N*m (55 kgf*cm, 48 in.*lbf)