Alfa Romeo 156

table of contents

156 7
BODY 7
MIRROR 7
LIGHTNING 8
BODY PARTS 9
BUMPER/GRILLE/PANEL 10
DRAFT DEFLECTOR 11
DRAFT DEFLECTOR 11
DRAFTDEFLECTOR 12
ENGINE 13
AIR SYSTEM 13
V-BELTS 14
TS 16V 14
2.0 JTS 15
2.5/3.2 V6 24V/GTA 16
1.9 JTD 8V 17
1.9 JTD 16V 18
2.4 JTD 10V 19
2.4 JTD 20V 20
ENGINE BLOCK 21
PISTON + LINERS 21
1.8 TS 16V 21
2,5 V6 24V 22
2.0 TS 16V 23
PIL PAN 24
FUEL SYSTEM 25
TS 16V 25
FUEL PUMP 25
2.0 JTS 26
FUEL PUMP 26
2.5/3.2 V6 24V/GTA 27
FUEL PUMP 27
1.9 JTD 8V 28
FUEL PUMP 28
1.9 JTD 16V 29
FUEL PUMP 29
2.4 JTD 10V 30
FUEL PUMP 30
2.4 JTD 20V 31
FUEL PUMP 31
ENGINE GASKETS 32
TS 16V 32
GASKETS ENGINE 32
HAED SET 33
FULL SET 34
HEADSREW SET 35
2.0 JTS 36

GASKETS ENGINE 36
HAED SET 37
2.5/3.2 V6 24V/GTA 38
GASKETS ENGINE 38
HAED SET 39
FULL SET 40
HEADSCREW SET 41
1.9 JTD 42
GASKETS ENGINE 42
HEADGASKET 43
HEAD SET 44
HEADSCREW SET 45
2.4 JTD 46
GASKETS ENGINE 46
HEAD GASKET 47
HEAD SET 48
HEADSCREW SET 49
COOLING SYSTEM 50
TS16V 50
TUBES 50
RADIATOR 51
THERMOSTAT 52
WATERPUMP 53
2.0 JTS 54
RADIATOR 54
THERMOSTAT 55
WATERPUMP 56
2.5/3.2 V6 24V/GTA 57
RADIATOR 57
THERMOSTAT 58
WATERPUMP 59
1.9 JTD 8V 60
RADIATOR 60
THERMOSTAT 61
WATERPUMP 62
1.9 JTD 16V 63
RADIATOR 63
THERMOSTAT 64
WATERPUMP 65
2.4 JTD 10V 66
RADIATOR 66
THERMOSTAT 67
WATERPUMP 68
2.4 JTD 20V 69
RADIATOR 69
THERMOSTAT 70
WATERPUMP 71
ENGINE MOUNT 72
TS16V 72
2.0 JTS 73

2.5/3.2 V6 24V/GTA 74
1.9 JTD 8V 75
1.9 JTD 16V 76
2.4 JTD 10V 77
156 2.4 JTD 20V 78
VALVE GEAR 79
TS16V 79
CAMSHAFT 79
VALVE MECHANISM 80
TIMING BELT 81
2.0 JTS 82
CAMSHAFT 82
VALVE MECHANISM 83
TIMINGBELT 84
2.5/3.2 V6 24V/GTA 85
CAMSHAFT 85
VALVE MECHANISM 86
TIMINGBELT 87
1.9 JTD 8V 88
CAMSHAFT 88
VALVE MECHANISM 89
TIMINGBELT 90
1.9 JTD 16V 91
CAMSHAFT 91
VALVE MECHANISM 92
TIMINGBELT 93
2.4 JTD 10V 94
CAMSHAFT 94
VALVE MECHANISM 95
TIMINGBELT 96
2.4 JTD 20V 97
CAMSHAFT 97
VALVE MECHANISM 98
TIMINGBELT 99
FILTER 100
TS 16V 100
2.0 JTS 101
2.5/3.2 V6 24V/GTA 102
1.9 JTD 103
2.4 JTD 104
EXHAUST SYSTEM 105
TURBO CHARGER 105
1.9/2.4 JTD 105
EXHAUST SYSTEM 106
TS 16V CF2 106
TS16V CF3 107
2.0 JTS 108
2.5 V6 24V >2002 109
2.5/3.2 V6 24V/GTA 2002> 110
1.9 JTD 8V 111

1.9 JTD 16V ... 112
2.4 JTD 10V ... 113
2.4 JTD 20V ... 114
SPORT EXHAUST SYSTEM ... 115
TS16V CF2 ... 115
TS16V CF3 ... 116
2.0 JTS ... 117
2.5 V6 24V >2002 ... 118
1.9 JTD 8V ... 119
1.9 JTD 16V ... 120
2.4 JTD 10V ... 121
LAMBDA PROBE ... 122
TS16V CF2 ... 122
TS16V CF3 ... 123
2.0 JTS ... 124
2.5 V6 24V CF2 >2002 ... 125
2.5/3.2 V6 24V/GTA 2002> ... 126
INTERIOR ... 127
CAR MAT ... 127
AIR CONDITIONER ... 128
2001 - 2008 1,9JTD ... 128
DRIVETRAIN ... 129
DRIVE SHAFT ... 129
1.6/1.8 TS 16V ... 129
2.0 TS 16V ... 130
2.0 JTS ... 131
2.5 V6 24V ... 132
3.2 V6 24V/GTA ... 133
1.9 JTD 8V ... 134
1.9 JTD 16V ... 135
2.4 JTD 10V ... 136
2.4 JTD 20V ... 137
CLUTCH ... 138
CLUTCH SET 1.6/1.8 TS 16V ... 138
SLEEVE BEARING 1.6/1.8 TS 16V ... 139
CLUTCH SET 2.0 TS 16V ... 140
SLEEVE BEARING 2.0 TS 16V ... 141
CLUTCH SET 2.0 JTS ... 142
SLEEVE BEARING 2.0 JTS ... 143
CLUTCH SET 2.5 V6 24V ... 144
GUIDE BUSH F. SLEEVE BEARING 2.5 V6 24V ... 145
CLUTCH SET 3.2 V6 24V/GTA ... 146
GUIDE BUSH f. SLEEVE BEARING 3.2 V6 24V/ ... 147
GUIDE f. SLEEVE BEARING 1.9 JTD 8V ... 148
CLUTCH SET 1.9 JTD 8V ... 149
CLUTCH SET 1.9 JTD 16V ... 150
GUIDE BUSH f. SLEEVE BEARING 1.9 JTD 16V ... 151
CLUTCH SET 2.4 JTD 10V ... 152
GUIDE BUSH f. SLEEVE BEARING 2.4 JTD 10V ... 153
CLUTCH SET 2.4 JTD 20V ... 154

SLEEVE BEARING 2.4 JTD 20V 155
CLUTCH ACTUATION 156
1.6/1.8 TS 16V 156
2.0 TS 16V 157
2.0 JTS 158
2.5 V6 24V 159
3.2 V6 24V/GTA 160
1.9 JTD 8V 161
1.9 JTD 16V 162
2.4 JTD 10V 163
2.4 JTD 20V 164
SUSPENSION 165
STRUT TS 16V 165
STRUT 2.0 JTS 166
STRUT 2.5 V6 24V 167
STRUT 3.2 V6 24V/GTA 168
STRUT 1.9 JTD 8/16V 169
STRUT 2.4 JTD 10/20V 170
ATTACHMENT FRONT 171
ATTACHMENT REAR 172
WHEEL BEARING 173
STEERING 174
STEERING PARTS 174
BRAKE 175
BRAKE DISKS >2002 175
BRAKE DISKS 2002> 176
BRAKE PADS >2002 177
BRAKE PADS 2002> 178
CALIPER >2002 179
CALIPER 2002> FRONT 180
CALIPER 2002> REAR 181
BRAKE SERVO/BRAKE MASTER CYL. >2002 182
BRAKE MASTER CYL. 2002> 183
BRAKE HOSES 184
BRAKE CABLE 185
ELECTRIC 186
FUSE 186
ENGINE ELECTRIC 187
IGNITION SYSTEM TS 187
IGNITION SYSTEM V6 188
AGGREGATS TS 189
AGGREGATS JTS 190
AGGREGATS V6 24V 191
AGGREGATS 1.9 JTD 8V 192
AGGREGATS 1.9 JTD 16V 193
AGGREGATS 2.4 JTD 10V 194
AGGREGATS 2.4 JTD 20V 195

156 > BODY > MIRROR

Außenspiegel/Mirror 156

1. ASP 18580
links/left
>2001

2. ASP 36539
links/left
2001>

3. ASP 79252
Glas/glass
rechts/right

4. ASP 79253
Glas/glass
links/left

5. ASP 17130
rechts/right
> 2001

6. ASP 36535
rechts/right
2001>

Alfa-Service Hurtienne

1	ASP18580	Außenspiegel links 156 Bj. >01 elek trisch,blaues Glas,schwarz	179.52 EUR
2	ASP36539	Außenspiegel links 156 Bj. 01> elek trisch,blaues Glas,konvex,grundiert	173.37 EUR
3	ASP79252	Ersatzglas f. Außenspiegel 156 rech ts	29.24 EUR
4	ASP79253	Ersatzglas f. Außenspiegel 156 link	29.24 EUR
5	ASP17130	Außenspiegel rechts 156 Bj. >01 ele ktrisch,blaues Glas,konvex,mit Sens or,schwarz	179.52 EUR
6	ASP36535	Außenspiegel rechts 156 Bj. 01> ele ktrisch,blaues Glas,konvex,grundier t	173.37 EUR

156 > BODY > LIGHTNING

1	SW20134	Hauptscheinwerfer rechts 156 (mit L EW) H7/H1	139.52 EUR
2	SW20135	Hauptscheinwerfer links 156 (mit LE W) H7/H1	139.52 EUR
3	SW78728	Xenon-Hauptscheinwerfer rechts 156	624.75 EUR
4	SW79517	Xenon-Hauptscheinwerfer links 156	624.75 EUR
5	SW85942	HEADLIGHT AR 159 and GTA FROM 09.03-09.05	193.89 EUR
5	SW79705	Hauptscheinwerfer rechts 156 GTA Bj . >6.03	213.01 EUR
6	SW79707	Hauptscheinwerfer links 156 GTA Bj. >6.03	213.01 EUR
6	SW85943	HEADLIGHT AR 156 and GTA FROM 09.03-09.05	193.89 EUR
7	SW77965	XENON HEADLIGHT RH 156 GTA >06.03	654.50 EUR
8	SW77966	XENON HEADLIGHT LH 156GTA > 06.03	654.50 EUR
9	NSW490119	FOGLIGHT 156 1997-01	61.55 EUR
10	NSW92719	FOG LAMP 156/SW (NOT GTA) 02>	69.25 EUR
11	NSW95239	Nebelscheinwerfer 156/GTA	77.00 EUR
12	ZBL20141	Zusatz-Blinkleuchte rechts 156/SW	12.90 EUR
13	ZBL20142	Zusatz-Blinkleuchte links 156/SW	12.90 EUR
14	RL20136	Rückleuchte rechts 156/SW (außen)	67.50 EUR
15	RL20137	Rückleuchte links 156/SW (außen)	67.50 EUR
16	RL20138	Rückleuchte rechts 156/SW (innen)	57.99 EUR
17	RL20139	Rückleuchte links 156/SW (innen)	57.99 EUR
18	RL85981	Rückleuchte 156/SW innen rechts Bj. 04> (Facelift)	61.04 EUR
19	RL85982	Rückleuchte 156/SW innen links Bj. 04>	61.04 EUR
20	ZBL20687	OE. 60620687 TAIL LAMP 156 >2000	91.30 EUR
22	ZBL70493	OE. 60670493 TAIL LAMP 156 2000>	61.50 EUR
23	KL08006	Kennzeichenleuchte 156/SW,166	13.23 EUR

156 > BODY > BODY PARTS

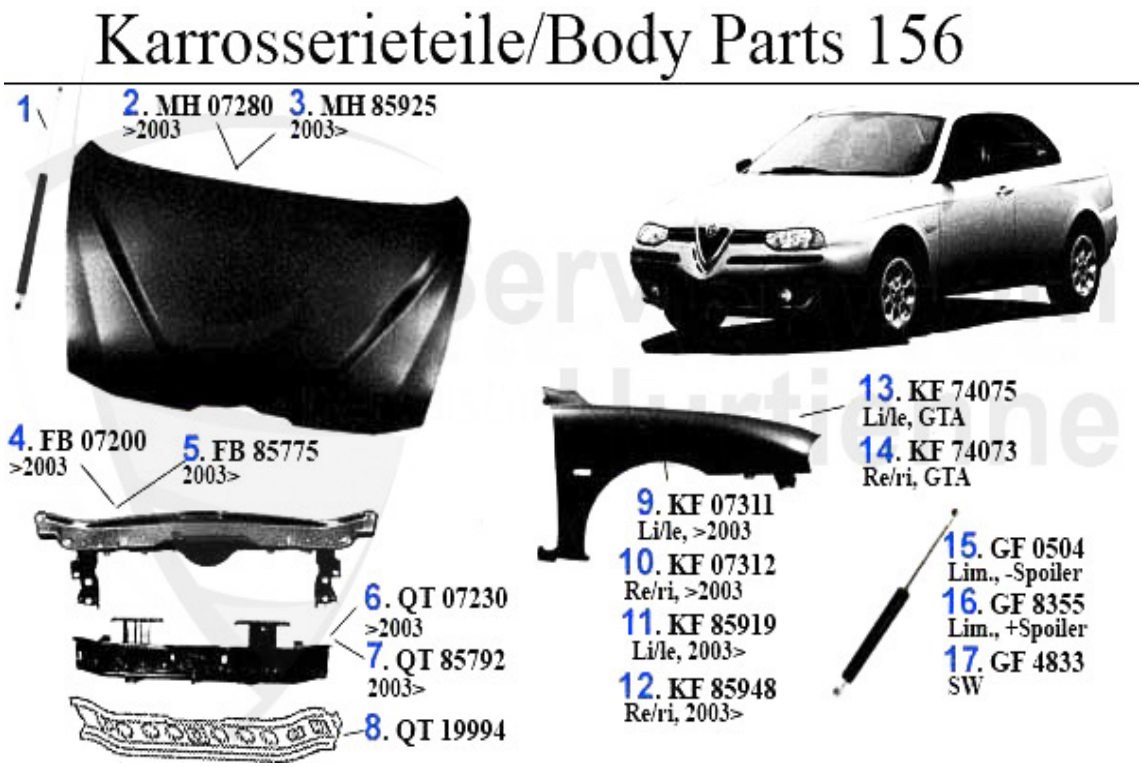

1	GF9675	OE. 60654724 PROP/BONNET 156	26.57 EUR
2	MH07280	Motorhaube 156 > Bj.03	266.73 EUR
3	MH85925	OE. 60685925 HOOD BONNET 156 2003>	452.41 EUR
4	FB07200	FRONT PLATE 156 >03	202.00 EUR
5	FB85775	OE. 60685775 FRAMING 156 2003>	193.59 EUR
6	QT07230	OE.60619597 boxed panel(lower radiator) 156 year >03	81.04 EUR
7	QT85792	OE. 60685792 CROSSRAIL 156 2003>	***
8	QT19994	OE. 60619994 BOXED PANEL 156	57.56 EUR
9	KF07311	OE. 60619296 FENDER FL 156 >2003	142.60 EUR
10	KF07312	OE. 60619295 FENDER FR 156 >2003	142.60 EUR
11	KF85919	OE. 60685919 FR.MUDGUARD/FENDER 156 2003>	216.45 EUR
12	KF85948	OE. 60685948 FR.MUDGUARD/FENDER 156 2003>	216.45 EUR
13	KF74075	OE. 60674075 FR.MUDGUARD/FENDER 156 GTA	265.00 EUR
14	KF74073	OE. 60674073 FR.MUDGUARD/FENDER 156 GTA	265.00 EUR
15	GF0504	OE. 60651067 GAS SPRING HATCH BACK 156 09.2000>	27.70 EUR
16	GF8355	Gasfeder Heckklappe 156 mit Spoiler	28.21 EUR
17	GF4833	OE. 60664833 GAS SPRING BACKDOOR 156 SW	27.91 EUR

156 > BODY > BUMPER/GRILLE/PANEL

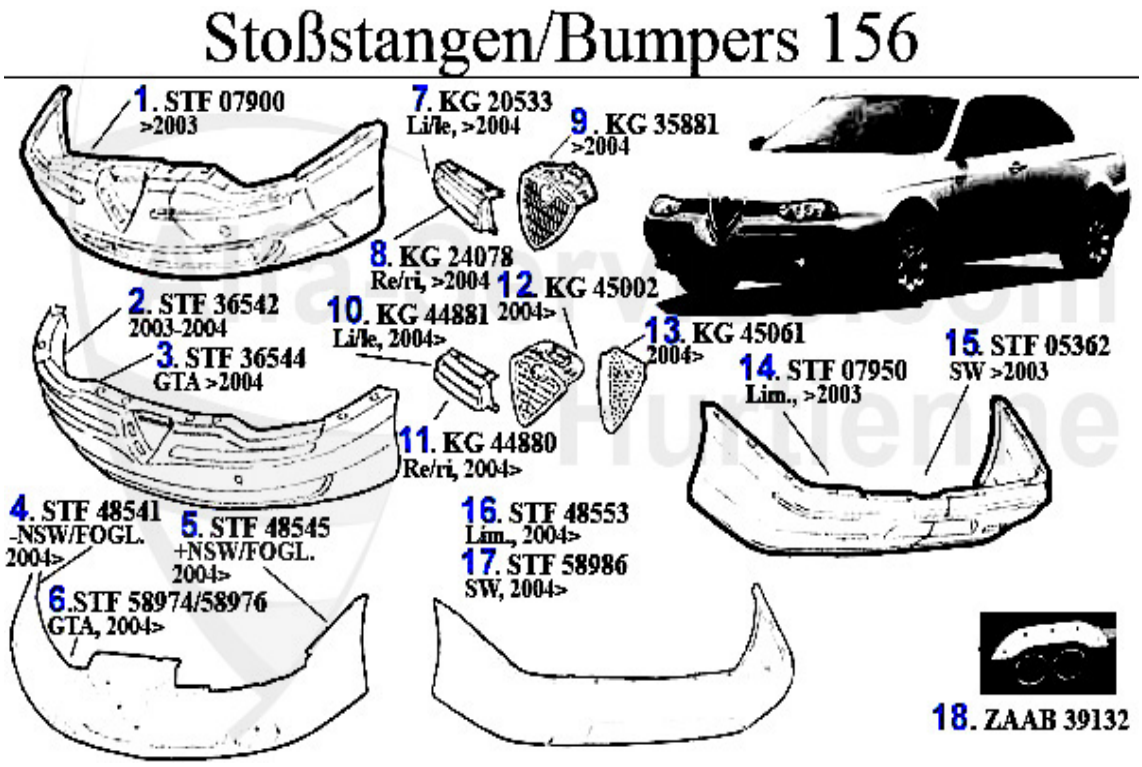

1	STF07900	OE. 60779355 FRONT BUMPER 156 >2003	230.82 EUR
2	STF36542	FRONT BUMPER 156 (PROGRESSION, DISTINCTIVE) 02-04	306.73 EUR
3	STF36544	FRONT BUMPER 156 GTA, YEAR >04	***
4	STF48541	Stoßfänger vorne 156 (Impression,Pr ogression,Distinctive) Bj. 04> (Fac elift) auch für NSW	435.99 EUR
5	STF48545	Stoßfänger 156 vorne (Impression,Pr ogression,Distinctive) mit NSW & Sc heinwerferwaschanlage Bj. 04> (Face lift)	539.00 EUR
6	STF58976	Stoßfänger 156 GTA vorne Bj. 04> (F acelift) mit Scheinwerferwaschanlag e	440.10 EUR
6	STF58974	Stoßfänger 156 GTA vorne Bj. 04> (F acelift) ohne Scheinwerferwaschanla ge	440.10 EUR
7	KG20533	OE. 156020533 GRILLE 156 LEFT	33.68 EUR
8	KG24078	OE. 156024078 GRILLE 156 RIGHT	33.47 EUR
9	KG35881	GRILLE 156 >04	96.00 EUR
10	KG44881	Kühlergrill 156 links (Progression, Impression,Distinctive) Bj. 04> (Fa celift)	50.13 EUR
11	KG44880	Kühlergrill 156 rechts (Impression, Progression,Distinctive) Bj. 04> (F acelift)	50.13 EUR
12	KG45002	RADIATOR GRILL (UPPER PART) 156 04> FACELIFT, ON THE BONNET	53.81 EUR
13	KG45061	RADIATOR GRILLE 156 CENTRE,INFERIOR SECTION 04> (FACELIFT)	67.54 EUR
14	STF05362	REAR BUMPER 156 SW	266.73 EUR
15	STF07950	REAR BUMPER 156	224.66 EUR
16	STF48553	Stoßfänger 156 hinten (Impression,P rogression,Distinctive) Bj. 04> (Fa celift)	409.32 EUR
17	STF58986	Stoßfänger 156 SW hinten (Impressio n,Progression,Distinctive) Bj. 04> (Facelift)	388.80 EUR
18	ZAAB39132	Zender Auspuff-Ausschnittblende 156 Serienschürze 1x90 mm	60.73 EUR

156 > BODY > DRAFT DEFLECTOR > DRAFT DEFLECTOR

Dachwindabweiser/Top Draftdeflector 156

1. DWA 1030

ohne Belüftungsklappen
without ventilation flaps

1	DWA1030	Dachwindabweiser 156/SW	46.67 EUR

Seitenwindabweiser/Side Draftdeflector 156

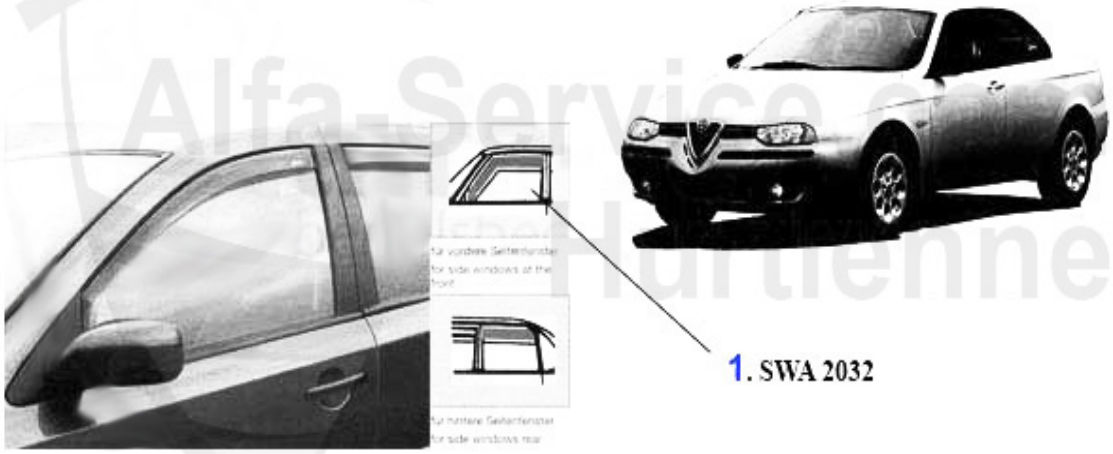

1	SWA2032	Seitenwindabweiser 156/SW	***

156 > ENGINE > AIR SYSTEM

1	LR13829	OE. 71713829 ELECTRO-VALVE	194.99 EUR
2	LMM07008	OE. 46407007 FLOWMETER TS 16V	235.00 EUR
2	LMM59804	OE. 46541253/60814852/46559804/55193048 0280218019,AIR FLOW METER DIV MODELLS Aftermarket product	94.01 EUR
3	LMS93709	Luftmassenschlauch 147/6 u.155 4 Zylindermotoren am Luftfilter 145/6 (94-99) AR155 (92-97)	69.00 EUR

156 > ENGINE > V-BELTS > TS 16V

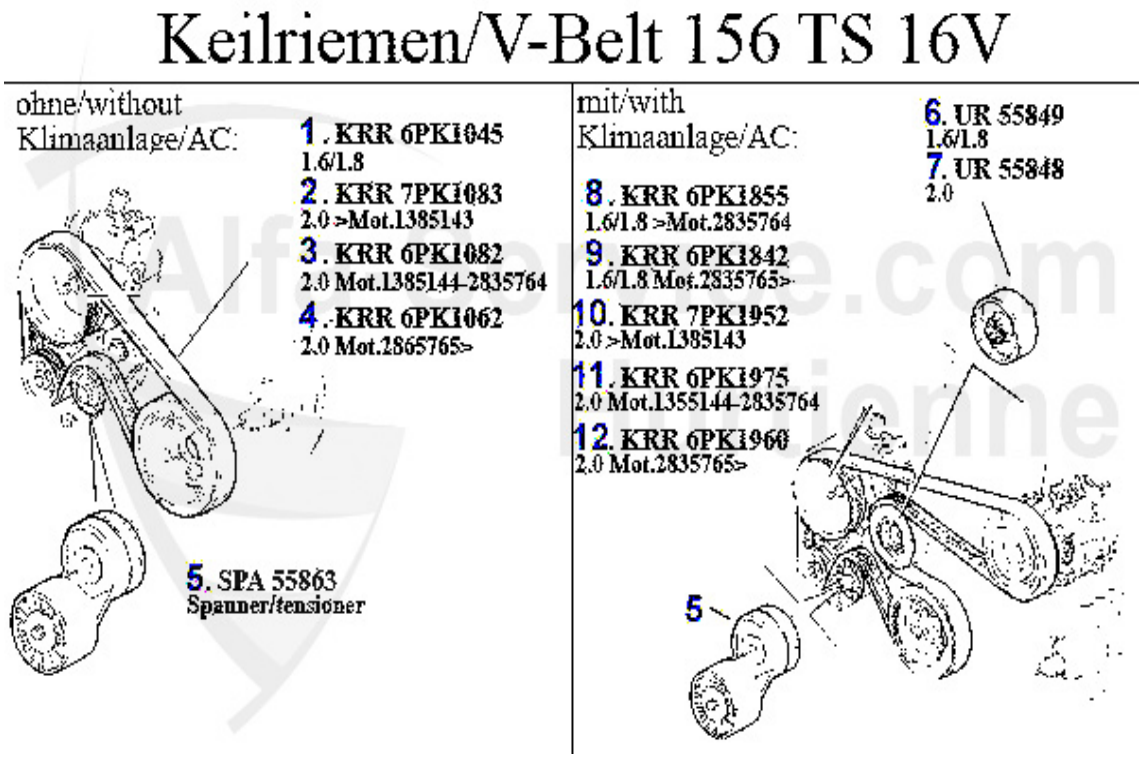

1	KRR6PK104 5	Keilrippenriemen 6PK1045 145/6 Bj. 97>,155,156,gtv&spider(916) 1.4/1.6 /1.8 TS 16V ohne Klima Generator/S ervopumpe	20.00 EUR
2	KRR7PK108 3	Keilrippenriemen 7PK1083 145/6,155 156,166,gtv/spider (916) bis Motor # 1385143, Servopumpe	28.00 EUR
3	KRR6PK108 2	Keilrippemriemen 6PK1082 145/6 2.0 TS 16V,147 2.0 TS/JTS,156/166 2.0 T S,gtv/spider (916) Bj. 98> 2.0 TS o hne Klima, Generator/Servopumpe	25.13 EUR
4	KRR6PK106 2	Keilrippenriemen 6PK1062 147,156 2. 0 16V TS CF 3 ohne Klima Generator/ Servopumpe	22.47 EUR
5	SPA55863	DRIVE BELT TENSIONER 145/6/7,155/6,166,916 2.0	43.99 EUR
6	UR55849	OE.60812515,REVERSE ROLLER FOR RIPPED V-BELT 145/6/7,155/6,GTV/SPIDER(916) 1.4/1.6/1.8 TS (WITH AIR CON)	34.37 EUR
7	UR55848	DRIVE BELT BEARING 156 2.0,145,166,916	69.00 EUR
8	KRR6PK185 5	V-RIBBED BELT 6PK1855,OE.60814395,145/6 1.4/1.8 TS 16V YEAR 97>,1.6 TS,1.6/1.8 16V,GTV/SPIDER 1.8 16V TS YEAR 98> GENERATOR,SERVOPUMP,AIR-CON-COMPRESSOR	28.73 EUR
9	KRR6PK184 2	V-RIBBED BELT 6PK 1842 145/6 1,8 TS WITH A/C , 155 1,6/1,8 TS , NUOVO GT	30.73 EUR
10	KRR7PK195 2	Keilrippenriemen 7PK1952 145/6,155, gtv/spider (916) 2.0 TS 16V ab Moto r # 343116, Generator/Servopumpe/Kl imakompressor	48.73 EUR
11	KRR6PK197 5	OE.60815414/60630741 RIBBED V- BELT,156/166/GTV/SPIDER(916)CF3 2.0L TS 16V UNTIL ENGINE #1385143 GENERATOR/SERVOPUMP/AIRCON COMPRESSOR 6PK1975 145/6/147	35.81 EUR
12	KRR6PK196 0	Keilrippenriemen 6PK1960 147/156/16 6/gtv/spider (916) 2.0 TS 16V CF3 a b Motor # 2835764 Genetator/Servopu mpe/Klimakompressor	38.20 EUR

156 > ENGINE > V-BELTS > 2.0 JTS

Keilrippenriemen 156 JTS

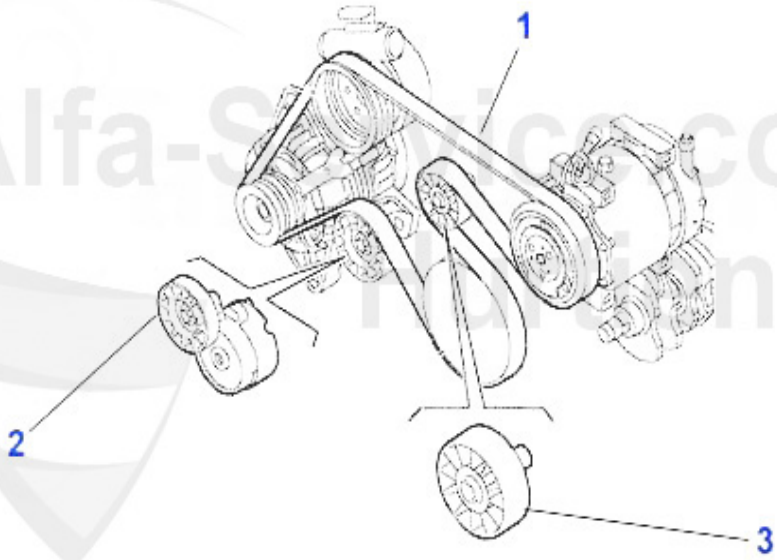

1	KRR6PK1960	Keilrippenriemen 6PK1960 147/156/16 6/gtv/spider (916) 2.0 TS 16V CF3 a b Motor # 2835764 Genetator/Servopu mpe/Klimakompressor	38.20 EUR
2	SPA55863	DRIVE BELT TENSIONER 145/6/7,155/6,166,916 2.0	43.99 EUR
3	UR55848	DRIVE BELT BEARING 156 2.0,145,166,916	69.00 EUR

156 > ENGINE > V-BELTS > 2.5/3.2 V6 24V/GTA

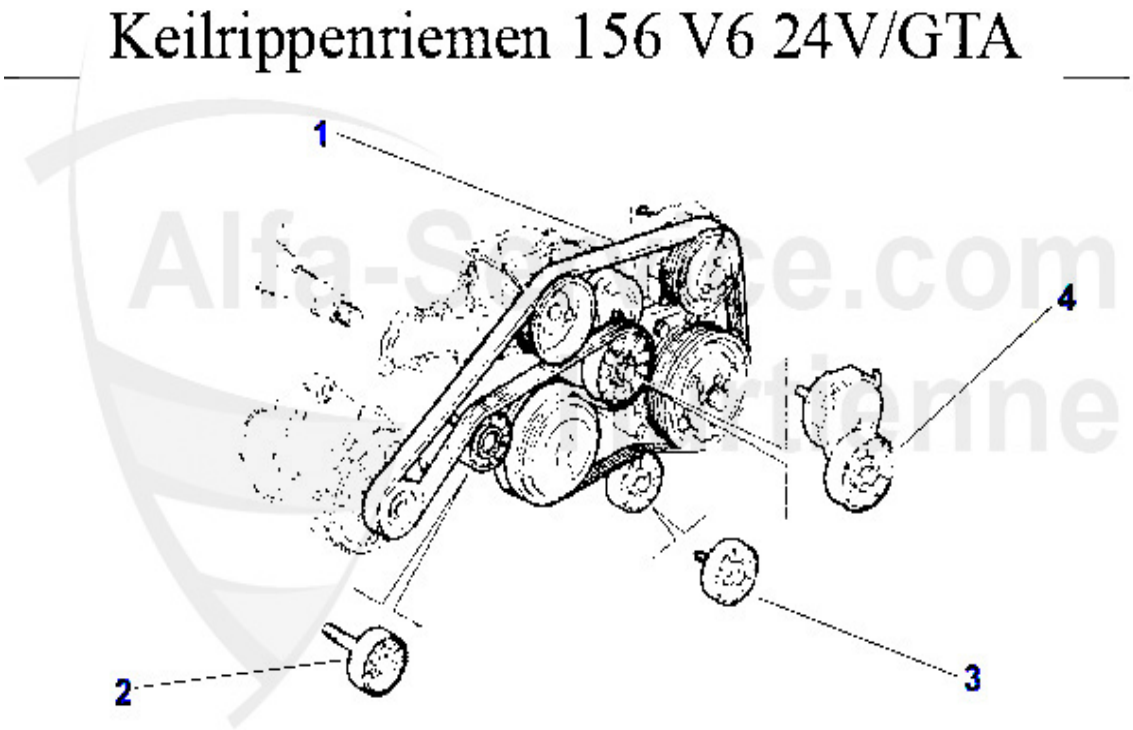

1	KRR6PK1995	V-BELT 6PK1995, OE.60626658, 147/156/ 166/GTV SPIDER (916) NUOVO GT ALL V6 24 V, GTA GENERATOR/SERVOPUMP/AIR CON COMPRESSOR	35.19 EUR
2	UR55865	IDLER PULLEY FOR DRIVE BELT 156,166,GTV/ SPIDER (916) V6	37.77 EUR
3	UR55867	IDLER PULLEY FOR DRIVE BELT 156,166, GTV/SPIDER (916) V6	56.06 EUR
4	SR55866	TENSIONER PULLEY FOR DRIVE BELT 156, 166 V6 24V/GTA	148.75 EUR

156 > ENGINE > V-BELTS > 1.9 JTD 8V

Keilriemen/V-Belt 156 1.9 JTD 8V

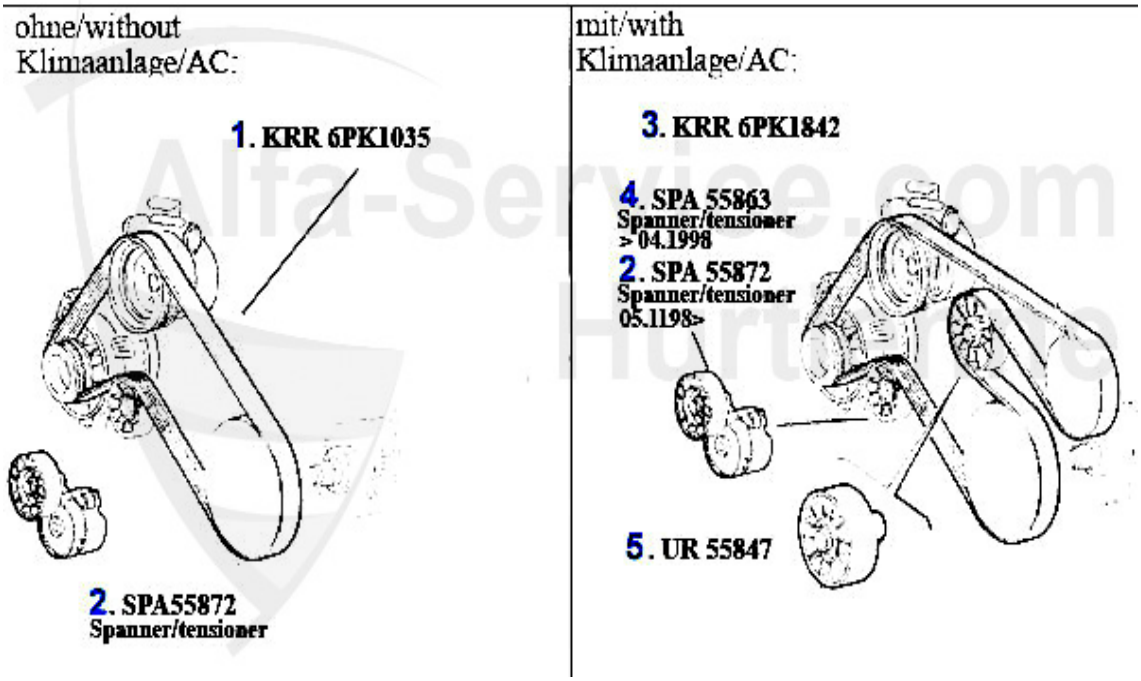

1	KRR6PK1035	Keilrippenriemen 6PK1035 145/6,156, 147 1.9 JTD ohne Klima	21.75 EUR
2	SPA55872	Spannarm Keilrippenriemen 145/6/7, 156 1.9 JTD (81/85KW mit/ohne Klima)	44.21 EUR
3	KRR6PK1842	V-RIBBED BELT 6PK 1842 145/6 1,8 TS WITH A/C , 155 1,6/1,8 TS , NUOVO GT	30.73 EUR
4	SPA55863	DRIVE BELT TENSIONER 145/6/7,155/6,166,916 2.0	43.99 EUR
5	UR55847	Umlenkrolle f. Keilrippenriemen 145 /6,147,156 1.9 JTD mit Klima	30.68 EUR

Keilriemen/V-Belt 156 1.9 JTD 16V

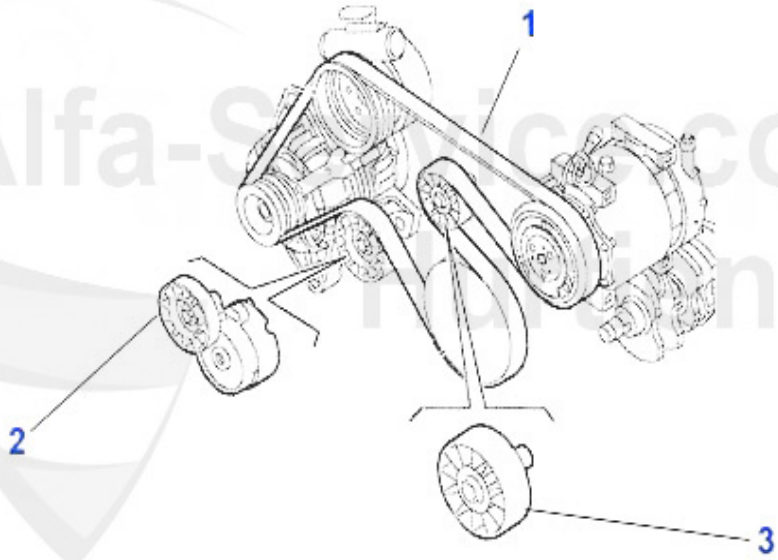

1	KRR6PK184 2	V-RIBBED BELT 6PK 1842 145/6 1,8 TS WITH A/C , 155 1,6/1,8 TS , NUOVO GT	30.73 EUR
2	SPA55872	Spannarm Keilrippenriemen 145/6/7, 156 1.9 JTD (81/85KW mit/ohne Klima)	44.21 EUR
3	UR55847	Umlenkrolle f. Keilrippenriemen 145 /6,147,156 1.9 JTD mit Klima	30.68 EUR

156 > ENGINE > V-BELTS > 2.4 JTD 10V

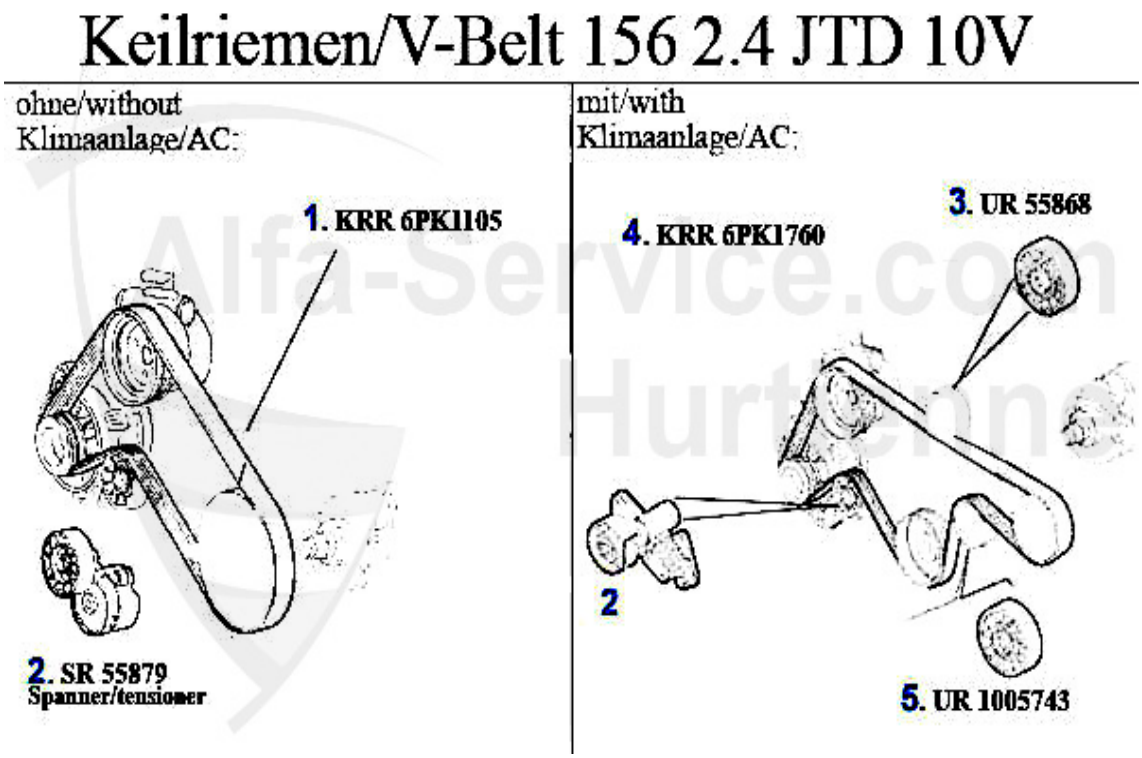

1	KRR6PK1105	Keilrippenriemen 6PK1105 156 2.4JTD ohne Klima,Generator/Servopumpe	26.06 EUR
2	SR55879	Riemenspanner Keilrippenriemen 156/ 166 2.4 JTD	173.37 EUR
3	UR55868	IDLER PULLEY RIBBED DRIVE BELT 156/166 2.4 JTD (WITH AC)	40.01 EUR
4	KRR6PK1760	Keilrippenriemen 6PK1760 156 2.4JTD Generator/Servopumpe/ Klimakompressor	28.00 EUR
5	UR1005743	Umlenkrolle Keilrippenriemen 156 2.4 JTD	50.27 EUR

Keilriemen/V-Belt 156 2.4 JTD 20V

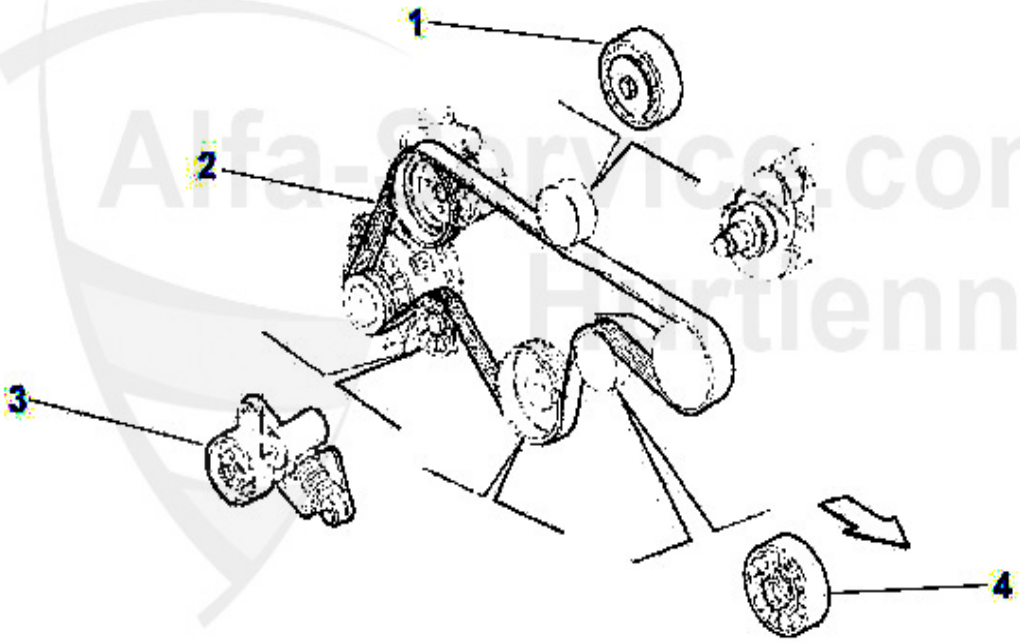

1	UR55868	IDLER PULLEY RIBBED DRIVE BELT 156/166 2.4 JTD (WITH AC)	40.01 EUR
2	KRR6PK1760	Keilrippenriemen 6PK1760 156 2.4JTD Generator/Servopumpe/ Klimakompressor	28.00 EUR
3	SR55879	Riemenspanner Keilrippenriemen 156/ 166 2.4 JTD	173.37 EUR
4	UR1005743	Umlenkrolle Keilrippenriemen 156 2.4 JTD	50.27 EUR

156 > ENGINE > ENGINE BLOCK > PISTON + LINERS > 1.8 TS 16V

1	KB24126	OE. 71713064 PISTON 1.8 TS 16V AR32201	159.01 EUR

156 > ENGINE > ENGINE BLOCK > PISTON + LINERS > 2,5 V6 24V

1	KB14927	OE. 71714927 PISTON E LINER ASS 156/166 2.5 V6 24V	238.00 EUR

156 > ENGINE > ENGINE BLOCK > PISTON + LINERS > 2.0 TS 16V

1	KB24100	OE. 5895173 PISTON 2.0 TS 16V (AR162201/32301)	184.45 EUR

156 > ENGINE > ENGINE BLOCK > PIL PAN

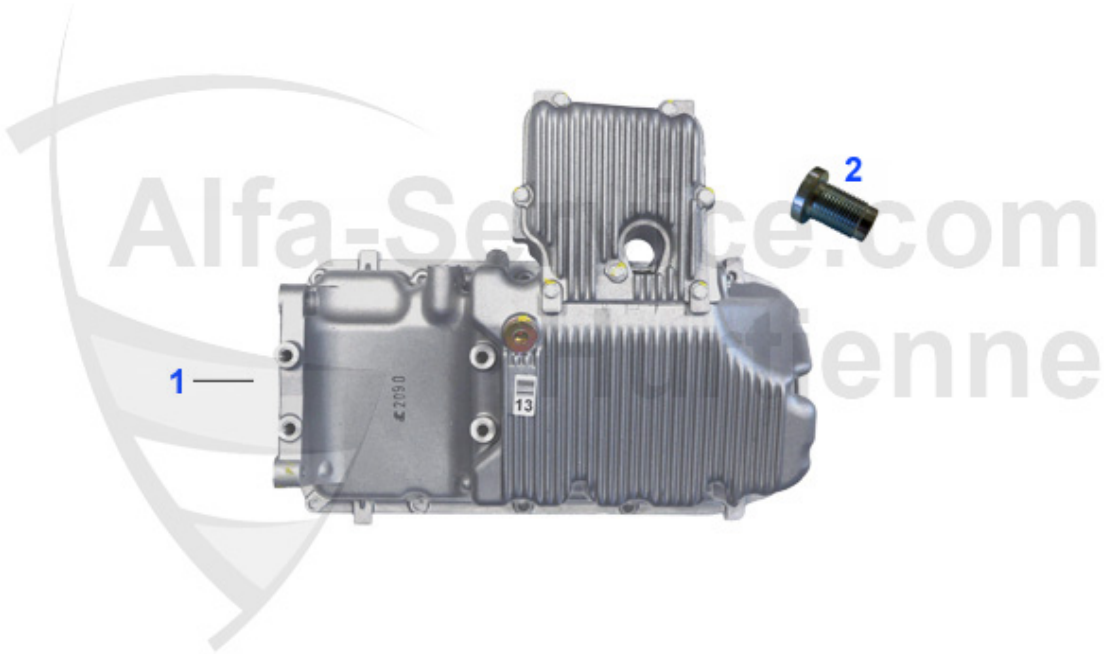

1	OW90209	OE. 55190209 PIL PAN 145/6,147,155,156, gtv/spider (916),Nuovo GT	469.00 EUR
2	OWD357	OIL DRAIN SCREW Alfa 145,146,147,155, 156,GT,GTV+Sp.916,NUOVO SPIDER,BRERA O.E. 46476967 (M18x1,5 30mm height)	7.74 EUR

156 > ENGINE > FUEL SYSTEM > TS 16V > FUEL PUMP

Kraftstoffpumpe/Fuel Pump 156 TS

1	KP6505	OE. 60652212 FUEL PUMP 156 1.6 TS > #0084340	252.36 EUR
2	KP6501	OE. 60628082 FUEL PUMP 156 1.6 TS # 0084340>/1.8/2.0 TS CF2/2.5 V6 24V	222.61 EUR
3	KP6510	OE. 60654919/60682368 FUEL PUMP 156, Nuovo GT 1.6/1.8/2.0 TS /2.5/3.2 V6 24V CF3	216.46 EUR

Kraftstoffpumpe/Fuel Pump 156 JTS

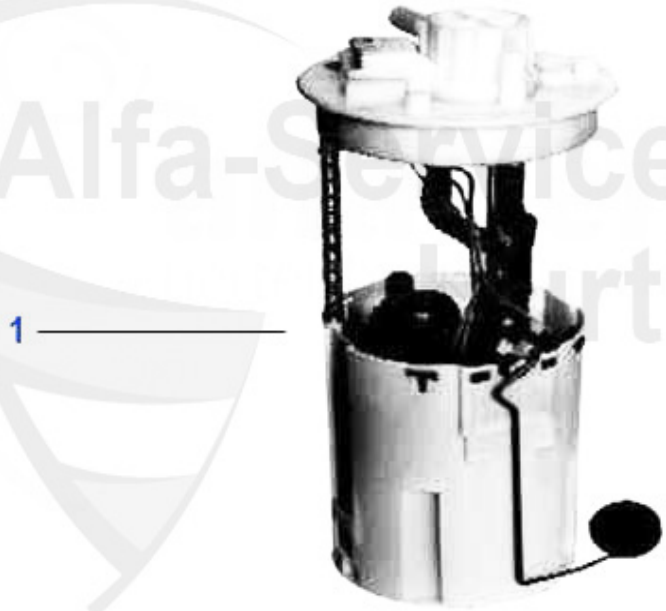

Alfa-Service.com
Hurtienne

1	KP6510	OE. 60654919/60682368 FUEL PUMP 156, Nuovo GT 1.6/1.8/2.0 TS /2.5/3.2 V6 24V CF3	216.46 EUR

Kraftstoffpumpe/Fuel Pump 156 2.5 V6 24V/GTA

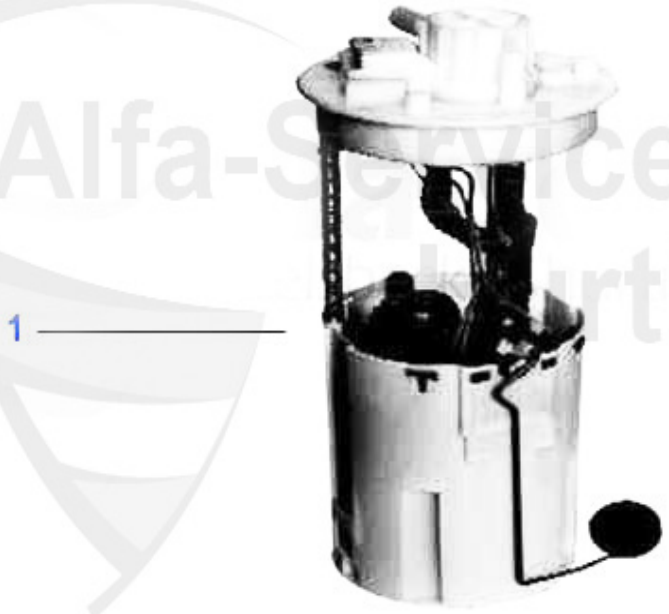

Alfa-Service.com
Lourtienne

1	KP6510	OE. 60654919/60682368 FUEL PUMP 156, Nuovo GT 1.6/1.8/2.0 TS /2.5/3.2 V6 24V CF3	216.46 EUR

Kraftstoffpumpe/Fuel Pump 156 1.9 JTD 8V

1 . KP 6562
CF 2, >09.2000

2 . KP 6569
CF 3, 10.2000>

Alfa-Service.com Hurtienne

1	KP6562	OE. 60664114 FUEL PUMP 156 1.9 JTD 8V > 09.2000	203.12 EUR
2	KP6569	OE. 60667034 FUEL PUMP 156 1.9/2.4 JTD 8/10V,16V/20V CF3 09.2000 >	220.55 EUR

Kraftstoffpumpe/Fuel Pump 156 1.9 JTD 16V

Alfa-Service.com
Martienne

1	KP6569	OE. 60667034 FUEL PUMP 156 1.9/2.4 JTD 8/10V,16V/20V CF3 09.2000 >	220.55 EUR

Kraftstoffpumpe/Fuel Pump 156 2.4 JTD 10V

1 . KP 6562
CF 2, >09.2000

2 . KP 6569
CF 3, 10.2000>

Alfa-Service.com Hurtienne

1	KP6562	OE. 60664114 FUEL PUMP 156 1.9 JTD 8V > 09.2000	203.12 EUR
2	KP6569	OE. 60667034 FUEL PUMP 156 1.9/2.4 JTD 8/10V,16V/20V CF3 09.2000 >	220.55 EUR

Kraftstoffpumpe/Fuel Pump 156 2.4 JTD 20V

Alfa-Service.com
Martienne

1	KP6569	OE. 60667034 FUEL PUMP 156 1.9/2.4 JTD 8/10V,16V/20V CF3 09.2000 >	220.55 EUR

156 > ENGINE > ENGINE GASKETS > TS 16V > GASKETS ENGINE

Dichtungen Motor/Gaskets Engine 156 TS 16V

1. VDD 5400

2. WD 08200
Auslaß/exhaust
30x42x7 mm

3. WD 55300
Einlaß/intake
55x68x8 mm

4. ASKD 59747

5. AGKD 02761

6. WD 55200
31x41x7 mm

7. WD 0800

1	VDD5400	CAM COVER GASKET FOR PLASTIC COVER 145/6 , 156 GTV/ SPIDER 916 04.98>	33.50 EUR
2	WD08200	Siri Nockenwelle 145/6,155,156,gtv/ spider(916),166 diverse Bj. 96-01	11.84 EUR
3	WD55300	siri nockenwelle 145/6,155,156 1.6,1.7,1.8,2.0 16V TS	16.97 EUR
4	ASKD59747	Ansaugkrümmerdichtung 145/6,147,155 156,166,gtv/spider (916),Nuovo GT # 0165088> TS 16V	25.13 EUR
5	AGKD02761	Dichtung Abgaskrümmer 145/6,147,155 ,156,166,gtv/spider (916) TS/JTS 16 V Bj. 98>	19.90 EUR
6	WD55200	OE.7628850 oil seal crankshaft front	10.31 EUR
7	WD0800	OIL SEAL CRANKSHAFT REAR (FLYWHEEL) 147 1.6 TS 16V/1.9 JTD 03>, 156 1.9/2.4 JTD 00>	47.50 EUR

Alfa-Service.com Hartienne

156 > ENGINE > ENGINE GASKETS > TS 16V > HAED SET

Kopfsatz/Head Set 156 TS 16V

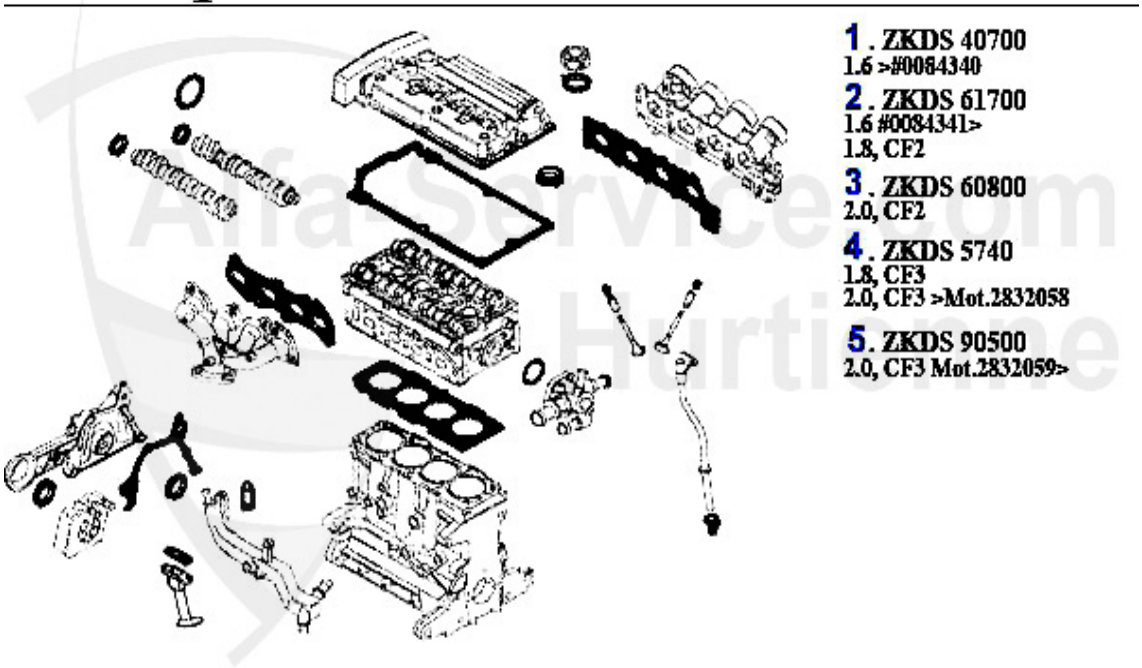

1	ZKDS40700	Kopfdichsatz 145/6,155,156,166 1.6-2.0 ie 16V TS Bj. >98 Alu-Ventildeckel	108.74 EUR
2	ZKDS61700	OE. 71713631 HEADSET	132.34 EUR
3	ZKDS60800	HEAD GASKET SET 145/6,156,GTV/SPIDER (916) 2.0 16V TS 97-01 PLASTIC VALVE COVER	111.82 EUR
4	ZKDS5740	OE. 71717685 HEAD SET 147,156,Nuovo GT 1.8/2.0 TS CF3	141.50 EUR
5	ZKDS90500	HEAD GASKET SET 166 2.0 TS CF3 110 KW #2557365 >	132.34 EUR

156 > ENGINE > ENGINE GASKETS > TS 16V > FULL SET

Motordichtsatz/Full Set 156 TS 16V

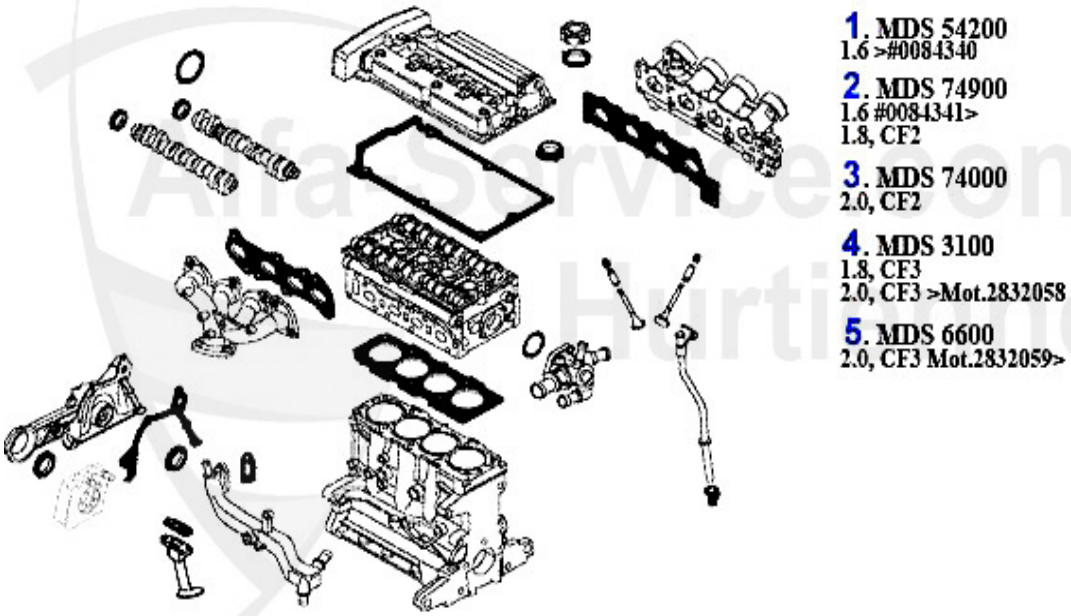

1	MDS54200	Motordichtsatz 145/6,155,156,166 1.6 - 2.0 TS 16V Bj. >98 Alu-Ventildeckel	127.21 EUR
2	MDS74900	Motordichtsatz 145/6,156,gtv/spider (916) 1.6 - 1.8 16V TS Bj. 97> Kunstoff-Ventildeckel	152.86 EUR
3	MDS74000	Motordichtsatz 145/6,156,gtv/spider (916) 2.0 16V TS, Bj. 97> Kunstoff-Ventildeckel	152.86 EUR
4	MDS3100	ENGINE GASKET SET 166 2.0 TS CF3 110 KW > #2557364	163.11 EUR
5	MDS6600	ENGINE GASKET SET 166 2.0 TS CF3 110 KW #2557365 >	163.11 EUR

156 > ENGINE > ENGINE GASKETS > TS 16V > HEADSREW SET

Kopfschraubensatz/Head Srew Set 156 TS 16V

1	ZKSS1600	HEAD SCREW SET 145/6,1.4/1.6 TS 16V YEAR 96-01,147 1.6 TS 16V 76/88 KW, 156 1.6 TS 16V	39.00 EUR
2	ZKSS152080	HEAD SCREW SET 145/6,147,155,156,166, GTV/SPIDER(916),NOUVO GT TS 16V	69.00 EUR

156 > ENGINE > ENGINE GASKETS > 2.0 JTS > GASKETS ENGINE

Dichtungen Motor/Gaskets Engine 156 2.0 JTS

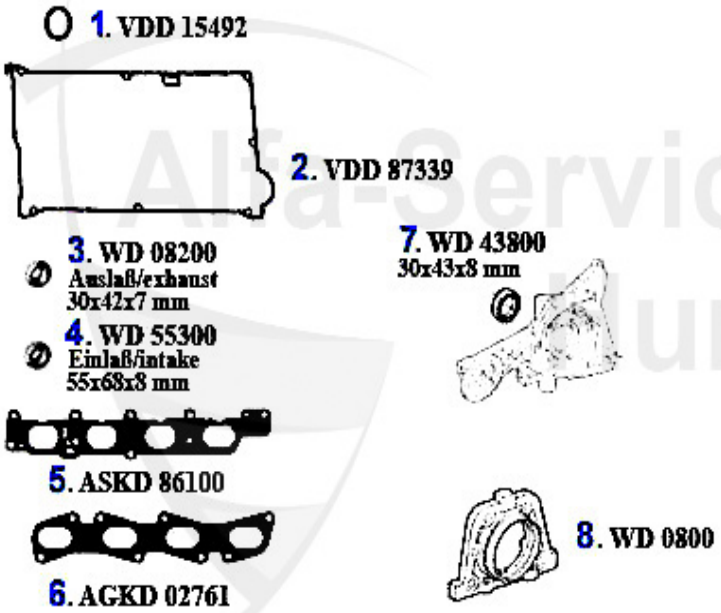

1	VDD15492	Kerzenschachtdichtung TS 16V	3.69 EUR
2	VDD87339	VALVE COVER SEAL 2.0 JTS 156,GTV/SPIDER (916),NUOVO GT INCL. 4 GASKET RINGS	35.00 EUR
3	WD08200	Siri Nockenwelle 145/6,155,156,gtv/ spider(916),166 diverse Bj. 96-01	11.84 EUR
4	WD55300	siri nockenwelle 145/6,155,156 1.6,1.7,1.8,2.0 16V TS	16.97 EUR
5	ASKD86100	Ansaugkrümmerdichtung 156,gtv / spider (916), Nuovo GT 2.0 JTS	57.49 EUR
6	AGKD02761	Dichtung Abgaskrümmer 145/6,147,155 ,156,166,gtv/spider (916) TS/JTS 16 V Bj. 98>	19.90 EUR
7	WD43800	Siri Kurbelwelle vorne (Riemensch.) 145/6 1.9 TD Bj. 94-99,147 2.0 TS 155 1.9 TD Bj. 93-97,155 2.0 TS 16V 2.0 16V Turbo	9.75 EUR
8	WD0800	OIL SEAL CRANKSHAFT REAR (FLYWHEEL) 147 1.6 TS 16V/1.9 JTD 03>, 156 1.9/2.4 JTD 00>	47.50 EUR

156 > ENGINE > ENGINE GASKETS > 2.0 JTS > HAED SET

Kopfdichtsatz/Head Set 156 2.0 JTS

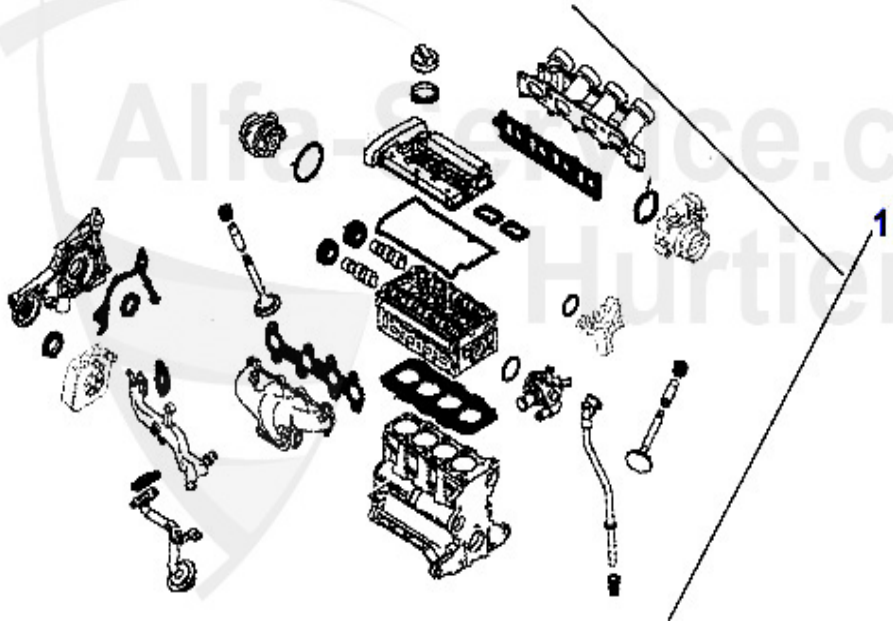

1	ZKDS11600	HEAD GASKET SET 156,GTV/SPIDER (916) NUOVO GT 2.0 JTS	130.79 EUR

156 > ENGINE > ENGINE GASKETS > 2.5/3.2 V6 24V/GTA > GASKETS ENGINE

Dichtungen Motor/Gaskets Engine 156 V6 24V/GTA

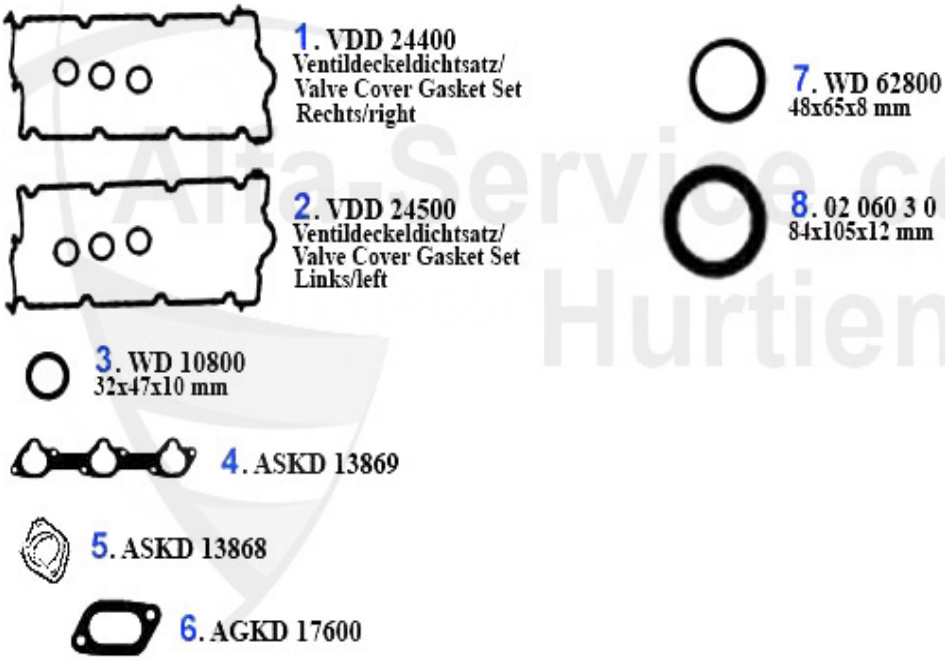

Alfa-Service.com Hurtienne

1	VDD24400	RIGHT CAM COVER GASKET 147,156,166,166, GTV/SPIDER (916),NUOVO GT V6 24V	34.37 EUR
2	VDD24500	LEFT CAM COVER GASKET 147,156,166, GTV/SPIDER (916),NUOVO GT V6 24V	34.37 EUR
4	ASKD13869	Ansaugkrümmerdichtung 147,156,164/S uper,166,gtv/spider (916),Nuovo GT 6-Zylinder 24V	6.70 EUR
5	ASKD13868	OE. 60513868 Sealing Gasket	1.95 EUR
6	AGKD17600	Abgaskrümmerdichtung 156,164/Super, 166,gtv/spider (916),Nuovo GT V6 24V	8.28 EUR
7	WD62800	Siri kurbelwelle vorne (Riemensch.) 156,166 6-zylinder	14.45 EUR
8	02 060 3 0	OIL SEAL (84/105/12) CRANKSHAFT REAR Spider 1990-93, 75, 90, 155, 164, GTV 6, 166, 156	24.10 EUR

156 > ENGINE > ENGINE GASKETS > 2.5/3.2 V6 24V/GTA > HAED SET

Kopfdichtsatz/Head Set 156 V6 24V/GTA

1. ZKDS 60900
2.5 V6 24V

2. ZKDS 61000
3.2 V6 24V/GTA

1	ZKDS60900	HEAD GASKET SET 156,166 2.5 V6 24V	261.80 EUR
2	ZKDS61000	HEAD GASKET SET 147,156,166,GTV/SPIDER (916),NUOVO GT V6 24V/GTA	255.45 EUR

156 > ENGINE > ENGINE GASKETS > 2.5/3.2 V6 24V/GTA > FULL SET

Motordichtsatz/Full Set 156 V6 24V/GTA

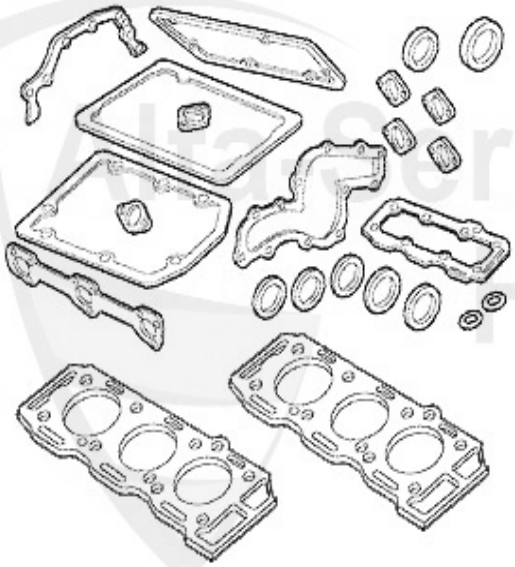

1. MDS 74100
2.5 V6 24V

2. MDS 74200
3.2 V6 24V/GTA

1	MDS74100	ENGINE GASKET SET 156,166 2.5 V6 24V	258.52 EUR
2	MDS74200	OE.71713724 FULL SET 147,156,166, GTV/SPIDER(916),NOUVO GT V6 24V/GTA ENGINE GASKET SET 147,156,166,GTV/SPIDER (916),NUOVO GT V6 24V/GTA	379.00 EUR

Kopfschraubensatz/Head Srew Set 156 V6 24V/GTA

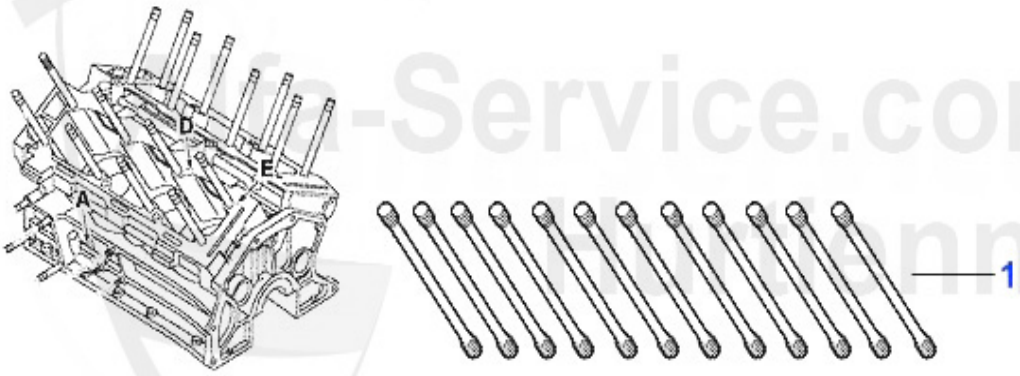

1	ZKSS8200	STUD-SET CYLINDER HEAD # 605 13 756	110.02 EUR

156 > ENGINE > ENGINE GASKETS > 1.9 JTD > GASKETS ENGINE

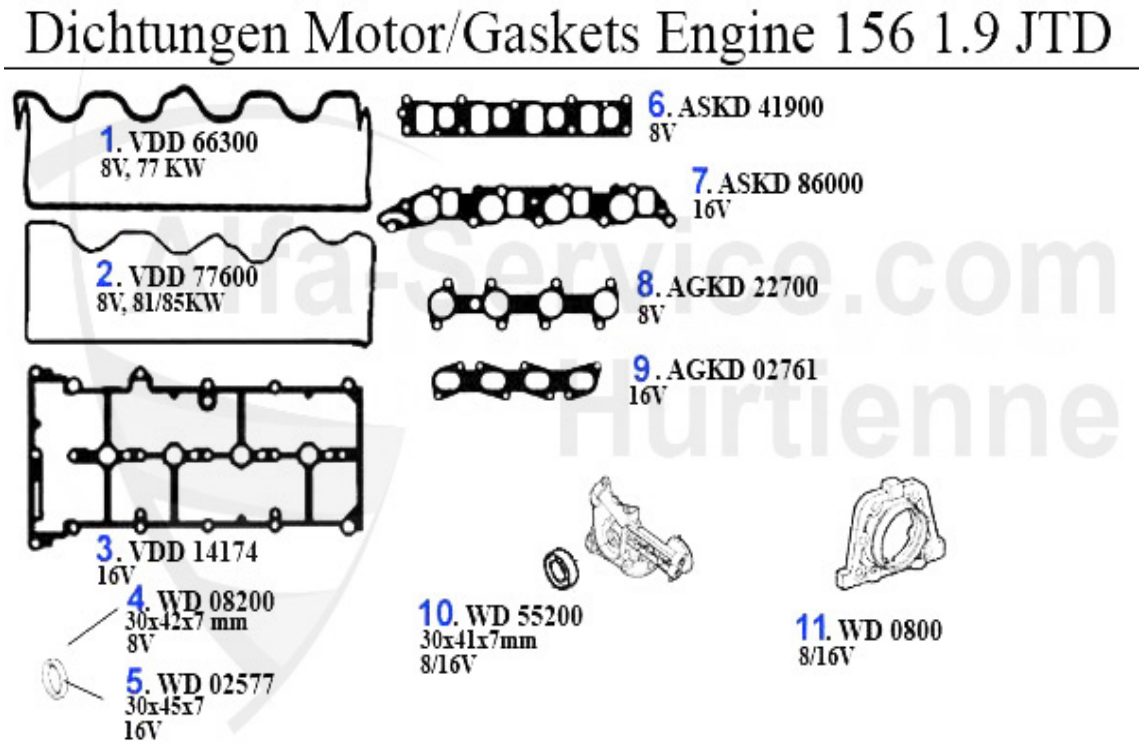

1	VDD66300	Ventildeckeldichtung 145/6,156 1.9 JTD CF2 Bj. 97-01 74KW	11.19 EUR
2	VDD77600	Ventildeckeldichtung 147,156 1.9 JT D 8V 81/85 KW	13.23 EUR
3	VDD14174	Ventildeckeldichtung 147,156,Nuovo GT 1.9 JTD 16V	21.03 EUR
4	WD08200	Siri Nockenwelle 145/6,155,156,gtv/ spider(916),166 diverse Bj. 96-01	11.84 EUR
5	WD02577	Siri Nockenwelle 147,156,166,Nuovo GT 1.9/2.4 JTD 16V/20V	5.90 EUR
6	ASKD41900	Ansaugkrümmerdichtung 145/6,147,156 1.9 JTD	15.28 EUR
7	ASKD86000	Ansaugkrümmerdichtung 147,156,Nuovo GT 1.9 JTD 16V	20.99 EUR
8	AGKD22700	Abgaskrümmerdichtung 145/6,147,156 1.9 JTD	19.99 EUR
9	AGKD02761	Dichtung Abgaskrümmer 145/6,147,155 ,156,166,gtv/spider (916) TS/JTS 16 V Bj. 98>	19.90 EUR
10	WD55200	OE.7628850 oil seal crankshaft front	10.31 EUR
11	WD0800	OIL SEAL CRANKSHAFT REAR (FLYWHEEL) 147 1.6 TS 16V/1.9 JTD 03>, 156 1.9/2.4 JTD 00>	47.50 EUR

Kopfdichtung/Head Gasket 156 1.9 JTD

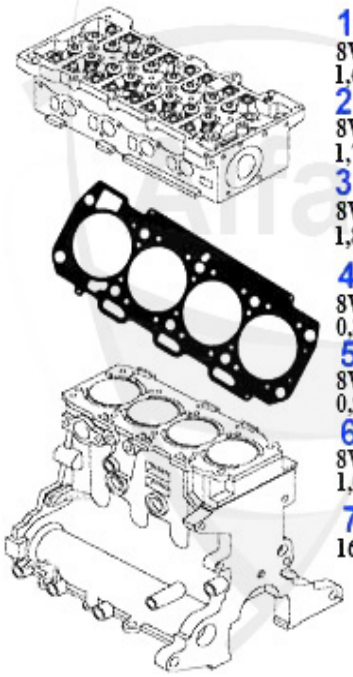

1. ZKD 20100
8V, 77KW
1,60 mm
2. ZKD 20110
8V, 77KW
1,70 mm
3. ZKD 20120
8V, 77KW
1,80 mm
4. ZKD 23900
8V, 81/85KW
0,82 mm
5. ZKD 23910
8V, 81/85KW
0,92 mm
6. ZKD 23920
8V, 81/85KW
1,02 mm
7. ZKD 52500
16V - 0,82 mm
8. ZKD 52510
16V - 0,92 mm
9. ZKD 52520
16V - 1,02 mm

Achtung/Attention:

Beim Bestellen der Kopfdichtung bitte auf die entsprechende Markierung achten!
Before you order the headgasket, please note the marking!

1	ZKD20100	Kopfdichtung 145/6,156 1.9 JTD Bj. 97-01 1.60 mm 0 kerbe	90.70 EUR
2	ZKD20110	Kopfdichtung 145/6,156 1.9 JTD Bj. 97-01 Dicke: 1.70 mm 1 Kerbe	52.32 EUR
3	ZKD20120	Kopfdichtung 145/6,156 1.9 JTD Bj. 97-01 dicke: 1.80 mm 2 Kerben	52.32 EUR
4	ZKD23900	Kopfdichtung 147,156 1.9 JTD 8V 81/ 85KW ACHTUNG: auf Markierung achten 0 Kerben	40.01 EUR
5	ZKD23910	Kopfdichtung 147,156 1.9 JTD 8V 81/ 85KW ACHTUNG: auf Markierung achten 1 Kerbe	43.09 EUR
6	ZKD23920	Kopfdichtung 147,156 1.9 JTD 8V 81/ 85KW ACHTUNG: auf Markierung achten 2 Kerben	45.14 EUR
7	ZKD52500	Kopfdichtung 147,156,Nuovo GT 1.9 JTD 16V ACHTUNG: auf Markierung achten 0Kerben	62.00 EUR
8	ZKD52510	Kopfdichtung 147,156,Nuovo GT 1.9 JTD 16V ACHTUNG: auf Markierung achten 1Kerbe	60.52 EUR
9	ZKD52520	Kopfdichtung 147,156,Nuovo GT 1.9 JTD 16V ACHTUNG: auf Markierung achten 2Kerben	64.12 EUR

Kopfdichtsatz/Head Set 156 1.9 JTD

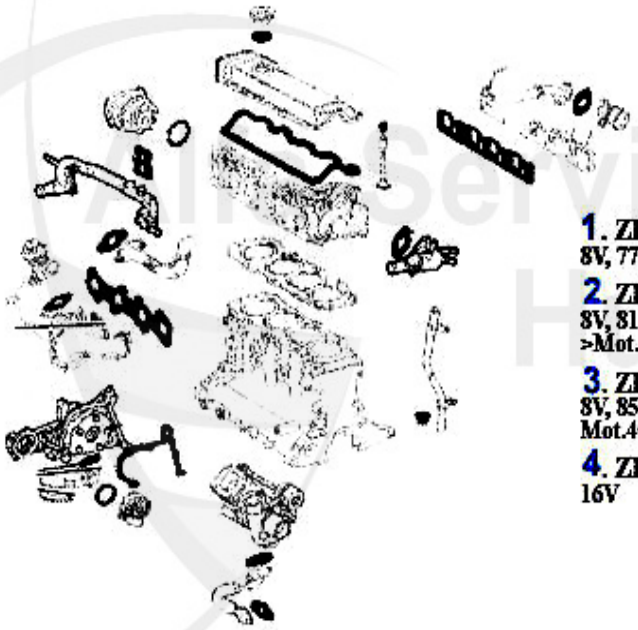

Achtung/Attention:
Ohne Kopfdichtung, Kopfdichtung bitte separat bestellen!
Without Headgasket, please order it separate!

1. ZKDS 10400
8V, 77 KW
2. ZKDS 1200
8V, 81/85KW
>Mot.4081111
3. ZKDS 9971
8V, 85KW
Mot.4081112>
4. ZKDS 16700
16V

1	ZKDS10400	HEAD GASKET SET 145/6,156 1.9 JTD 97-01 WITHOUT HEAD GASKET	60.52 EUR
2	ZKDS1200	Kopfdichsatz (ohne ZKD) 147,156 1,9 JTD 8V 81/85 KW >Mot.# 4081111	70.78 EUR
3	ZKDS9971	Kopfdichsatz (ohne ZKD) 147,156 1.9 JTD 8V 81/85KW Mot.# 4081111>	***
4	ZKDS16700	HEAD GASKET SET (WITHOUT HEAD GASKET) 147,156,NUOVO GT 1.9 JTD 16V	122.08 EUR

Kopfschraubensatz/Head Srew Set 156 1.9 JTD

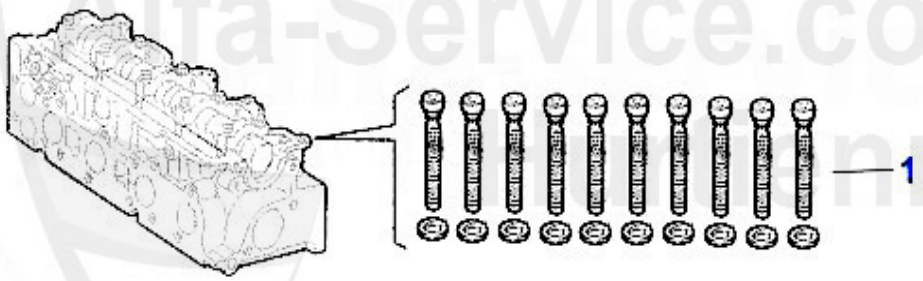

1	ZKSS0300	HEAD SCREW SET 145/6,147,156 1.9 JTD 8V 74/85 KW	40.94 EUR

156 > ENGINE > ENGINE GASKETS > 2.4 JTD > GASKETS ENGINE

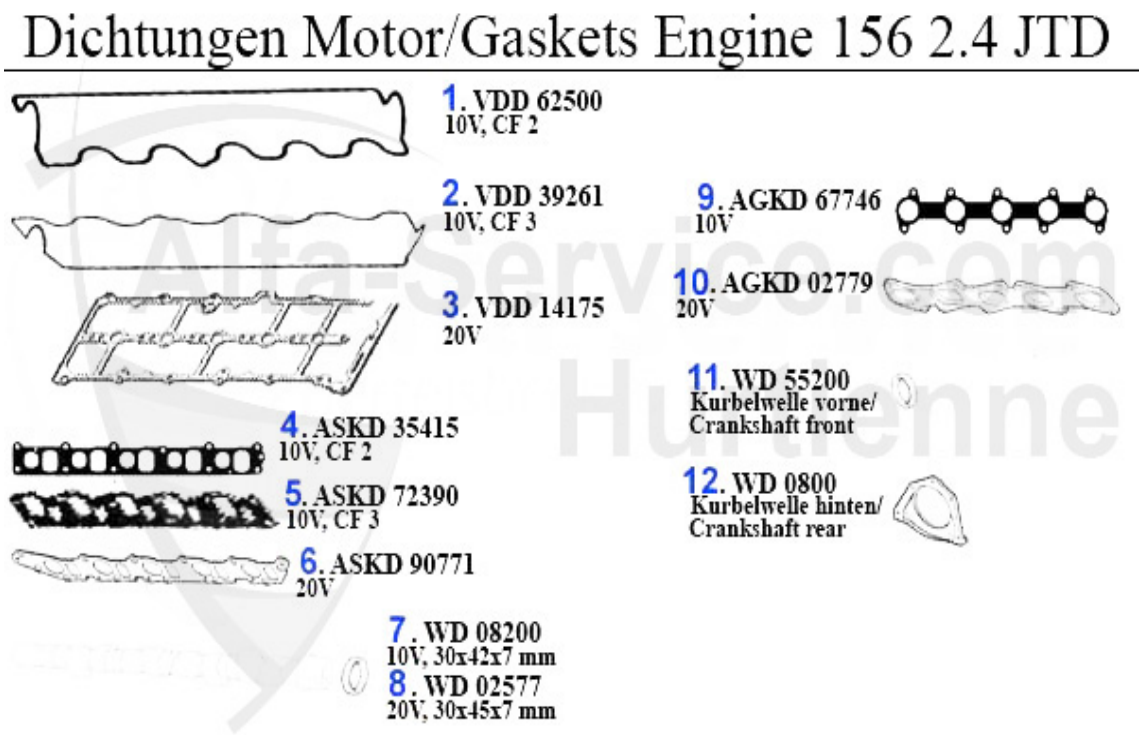

1	VDD62500	Ventildeckeldichtung 156,166 2.4 JTD CF 2 Bj. 09.97-10.00	14.26 EUR
2	VDD39261	OE. 46739261/60816566 Gasket	17.34 EUR
3	VDD14175	OE. 46814175 Gasket	22.05 EUR
4	ASKD35415	OE. 60814987/7735415 Gasket	17.85 EUR
5	ASKD72390	Ansaugkrümmerdichtung 156,166 2.4 JTD CF 3 10V	17.96 EUR
6	ASKD90771	OE. 55190771 Gasket	18.05 EUR
7	WD08200	Siri Nockenwelle 145/6,155,156,gtv/ spider(916),166 diverse Bj. 96-01	11.84 EUR
8	WD02577	Siri Nockenwelle 147,156,166,Nuovo GT 1.9/2.4 JTD 16V/20V	5.90 EUR
9	AGKD67746	OE. 60813631/46414437/46467746 Gasket	12.83 EUR
10	AGKD02779	OE. 73502779 Gasket	16.62 EUR
11	WD55200	OE.7628850 oil seal crankshaft front	10.31 EUR
12	WD0800	OIL SEAL CRANKSHAFT REAR (FLYWHEEL) 147 1.6 TS 16V/1.9 JTD 03>, 156 1.9/2.4 JTD 00>	47.50 EUR

Kopfdichtung/Headgasket 156 2.4 JTD

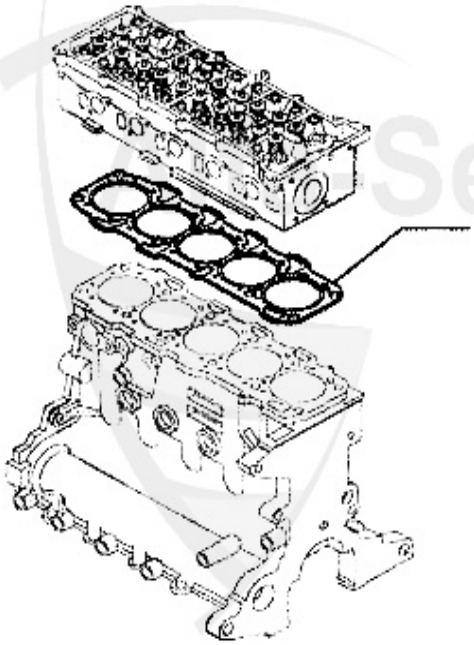

Achtung/Attention:

Beim Bestellen der Kopfdichtung bitte auf die entsprechende Markierung achten!
Before you order the headgasket, please note the marking!

1. ZKD 20200
10V, CF2, 1,60 mm

2. ZKD 20210
10V, CF2, 1,70 mm

3. ZKD 20210
10V, CF2, 1,80 mm

4. ZKD 37200
10V, CF3, 0,82 mm

5. ZKD 37210
10V, CF3, 0,92 mm

6. ZKD 37220
10V, CF3, 1,02 mm

7. ZKD 90353
20V, 0,82 mm

8. ZKD 90354
20V, 0,92 mm

9. ZKD 90355
20V, 1,02 mm

1	ZKD20200	Kopfdichtung 156,166 2.4 JTD Bj. 97-00 Dicke: 1.60 mm 0 Kerben	91.30 EUR
2	ZKD20210	OE.60814967, HEAD GASKET 156,166 2.4 JTD 97-00, THICKNESS 1.70MM 1 JAG	91.30 EUR
3	ZKD20220	Kopfdichtung 156,166 2.4 JTD Bj. 97-00 Dicke: 1.80 mm 2 Kerben	91.30 EUR
4	ZKD37200	Kopfdichtung 156,166 2.4 JTD CF3 103/110 KW ACHTUNG: auf Markierung achten 0 Kerbe	70.78 EUR
5	ZKD37210	Kopfdichtung 156,166 2.4 JTD CF3 103/110 KW ACHTUNG: auf Markierung achten 1 Kerbe	70.78 EUR
6	ZKD37220	Kopfdichtung 156,166 2.4 JTD CF3 103/110 KW ACHTUNG: auf Markierung achten 2 Kerben	81.04 EUR
7	ZKD90353	Kopfdichtung 156,166 2.4 JTD 129 KW ACHTUNG: auf Markierung achten 0 Kerben	56.42 EUR
8	ZKD90354	HEAD GASKET 156,166 2.4 JTD 129 KW CAUTION! PLEASE CHECK MARK 1 JAG!	83.75 EUR
9	ZKD90355	HEAD GASKET 156,166 2.4 JTD 129 KW CAUTION! PLEASE CHECK MARK 2 JAGS!	86.25 EUR

Kopfdichtsatz/Head Set 156 2.4 JTD

1. ZKDS 10500
10V, CF2
2. ZKDS 14300
10V, CF3
3. ZKDS 34259
20V

Achtung/Attention:
Ohne Kopfdichtung, Kopfdichtung bitte separat bestellen!
Without Headgasket, please order it separate!

1	ZKDS10500	HEAD GASKET SET 156,166 2.4 JTD 97-01 WITHOUT HEAD GASKET	75.91 EUR
2	ZKDS14300	HEAD GASKET SET (WITHOUT HEAD GASKET) 156,166 2.4 JTD CF3 103/110 KW	91.30 EUR
3	ZKDS34259	HEAD GASKET SET (WITHOUT HEAD GASKET) 156,166 2.4 JTD CF3 129 KW	124.91 EUR

Kopfschraubensatz/Head Screw Set 156 2.4 JTD

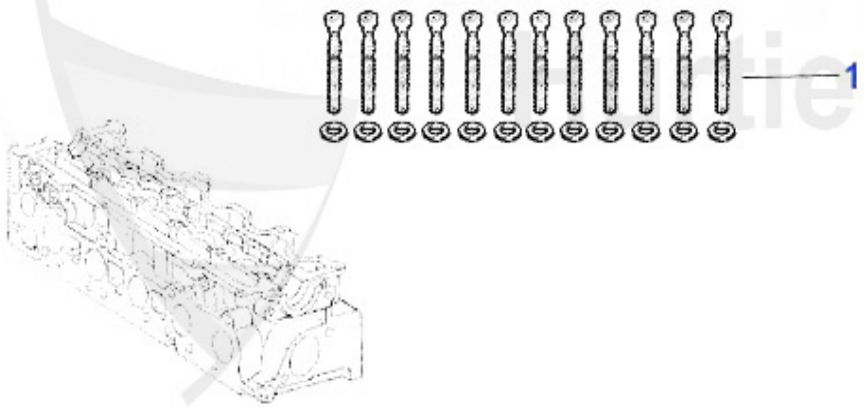

1	ZKSS8300	HEAD SCREW SET 156,166 2.4 JTD	60.52 EUR

156 > ENGINE > COOLING SYSTEM > TS16V > TUBES

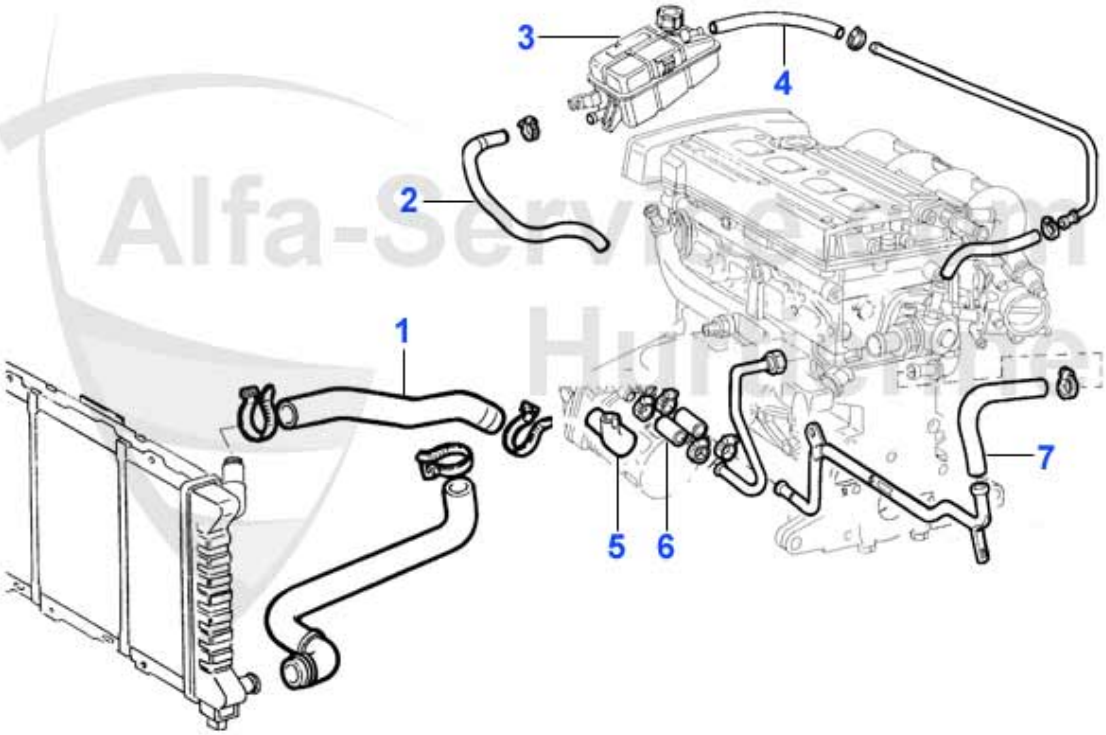

1	KWS24584	UPPER WATER HOSE AR 156 TS 1.6-1.8 WITH AC	***
1	KWS29271	UPPER WATER HOSE AR 156 TS 1.6-1.8 WITHOUT AC	***
2	KWS0080	Kühlwasserschlauch Wasser- brücke z.Ausgleichsbehälter 156 TS 1,6+1,8(CF2) 1,8 CF3	***
3	KWB93147	Kühlwasserausgleichsbehälter AR145, 146 (97-00) AR156 (97-02) GT (03-10 1,6TS /1,8TS	37.00 EUR
4	KWS0084	Schlauch Ausgleichsbehälter Verteilerrohr 1,8+2,0 TS (CF2) 145,147,155,156,166, GTV+Spider916	***
4	KWS0085	Schlauch Ausgleichsbehälter Verteilerrohr 1,8+2,0 TS (CF3) 156, GT, GTV+Spider 916,	***
5	KWS0086	Schlauch am Wärmetauscher 1,8+2,0TS (CF3) 97-02	***
6	KWS0083	Verbindungsstück Verteiler Rohr-Wärmetauscher 145,147, 155,156,166,GTV+Spider 916 alle TS Motoren (CF2+CF3)	***
7	KWS0081	Kühlwasserschl. Thermostat unten zum Verteilerrohr 156 1,6/1,8/2,0TS (CF2)	***

156 > ENGINE > COOLING SYSTEM > TS16V > RADIATOR

Kühler/Radiator 156 TS

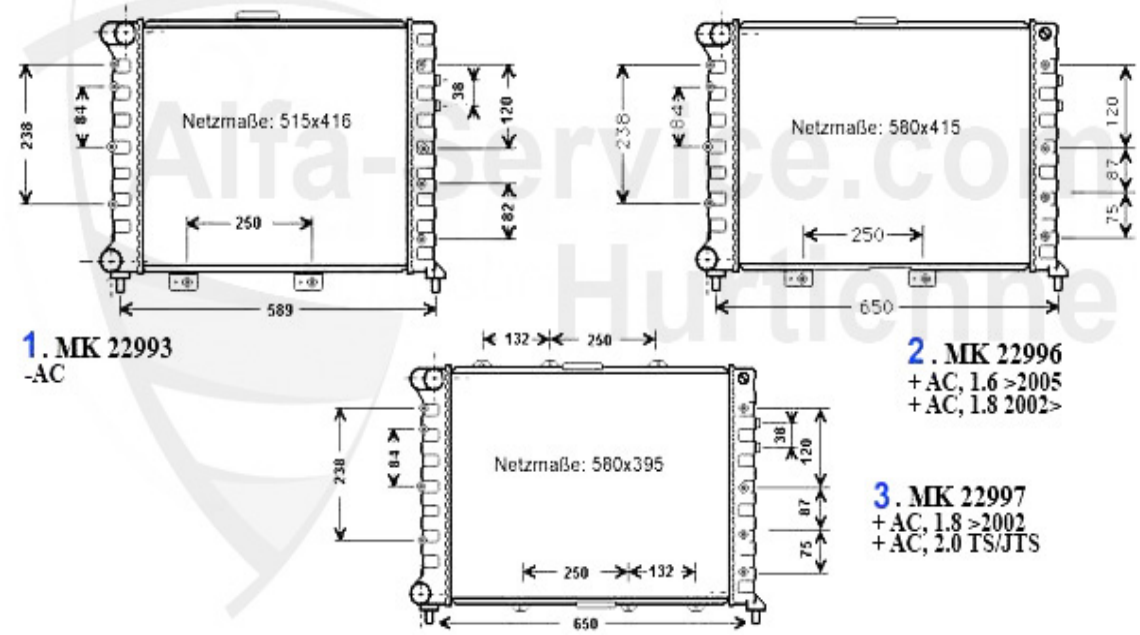

1	MK22993	RADIATOR 156 1.6/1.8/2.0 16V TS WITHOUT AC >10.00	190.29 EUR
2	MK22996	RADIATOR 156 1.6/1.8/2.0 16V TS WITH AC	240.18 EUR
3	MK22997	RADIATOR 156 TS 16V/2.5 V6 WITH AC	368.19 EUR

Thermostat 156 TS

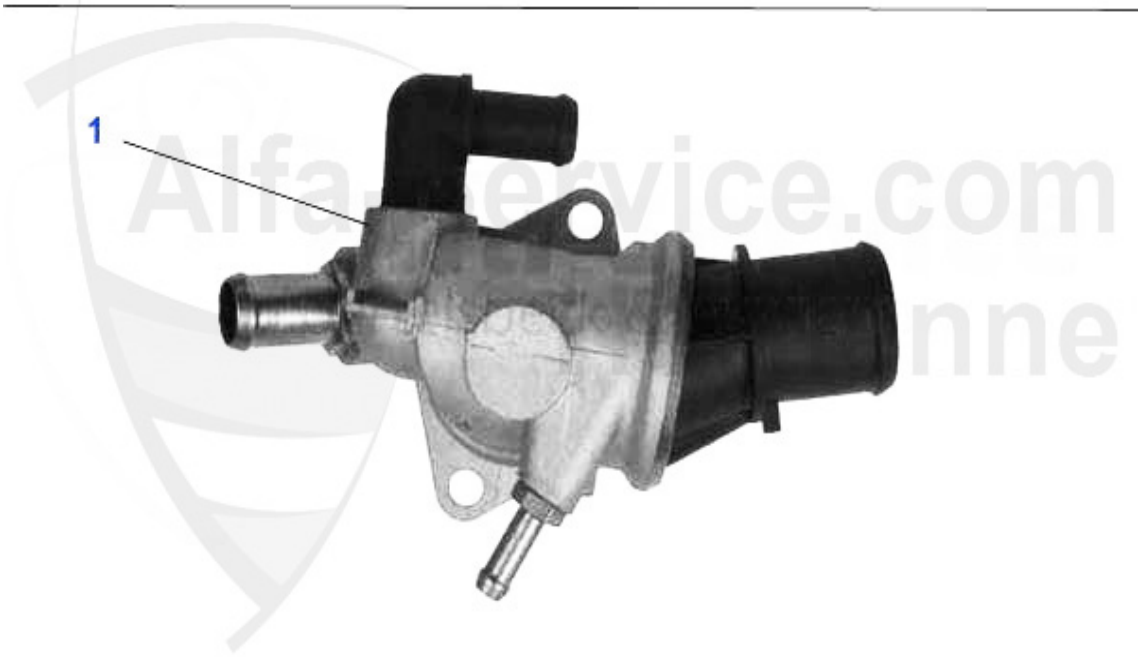

1	TH650688	OE.60653946,THERMOSTAT WITH HOUSING 1.6/1.8/2.0 IE TS YEAR 98>,THERMOSTAT 145/6,147,156,GTV(916),TS 16V	59.50 EUR

Wasserpumpe/Waterpump 156 TS

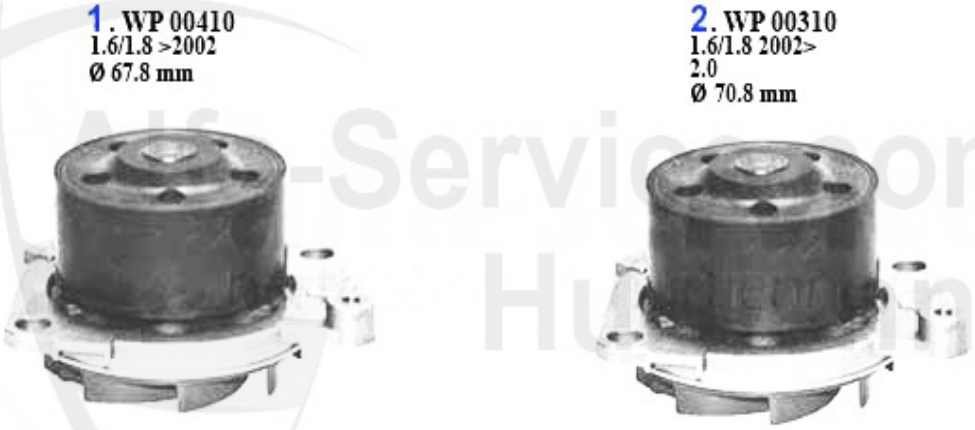

1	WP00410	WATER PUMP 145/6 1.6 IE 16V TS,155/6 1.6/1.8 IE 16V TS,NUOVO GT 1.8 TS	54.37 EUR
2	WP00310	OE. 60586222 WATERPUMP TS 16V	50.27 EUR

Kühler/Radiator 156 JTS

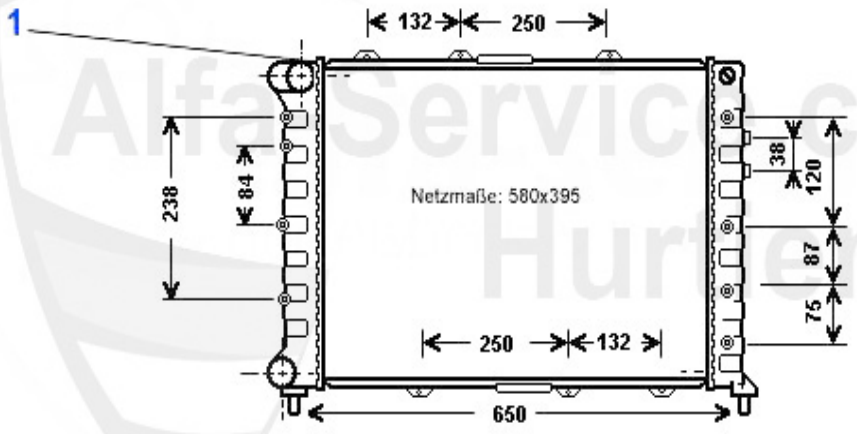

1	MK22997	RADIATOR 156 TS 16V/2.5 V6 WITH AC	368.19 EUR

Thermostat 156 JTS

1	TH76067	OE. 60676067 THERMOSTAT 156,gtv/spider (916),Nuovo GT 2.0 JTS	44.99 EUR

Wasserpumpe/Waterpump 156 JTS

1	WP00310	OE. 60586222 WATERPUMP TS 16V	50.27 EUR

Kühler/Radiator 156 V6 24V/GTA

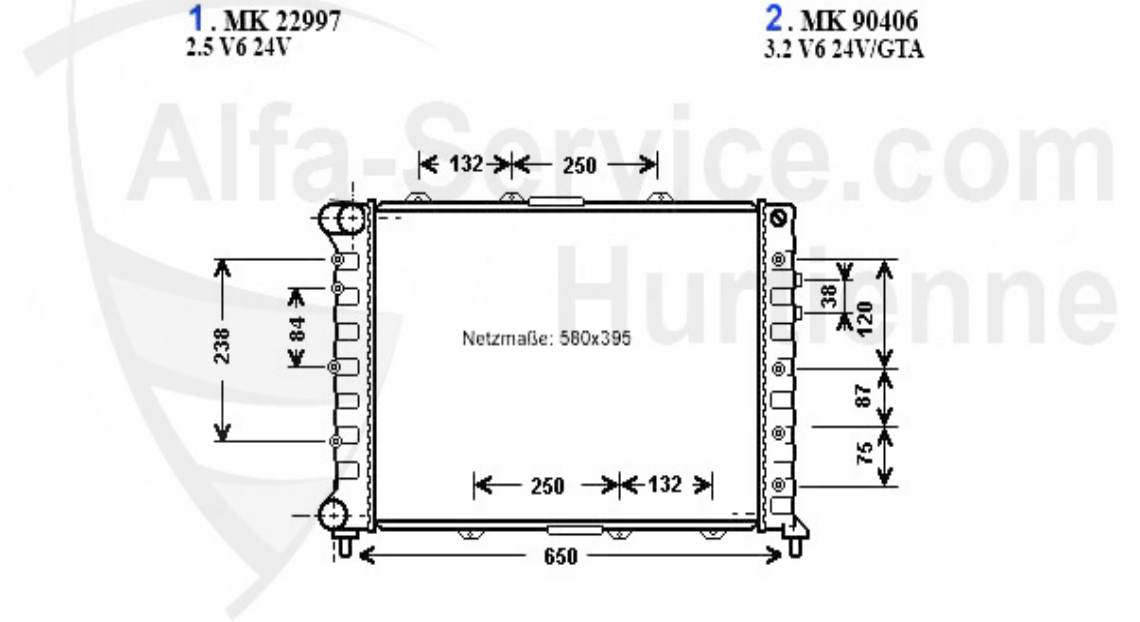

1	MK22997	RADIATOR 156 TS 16V/2.5 V6 WITH AC	368.19 EUR
2	MK90406	OE. 60690406 RADIATOR 147 3.2 V6 24V/GTA	593.81 EUR

Thermostat 156 V6 24V/GTA

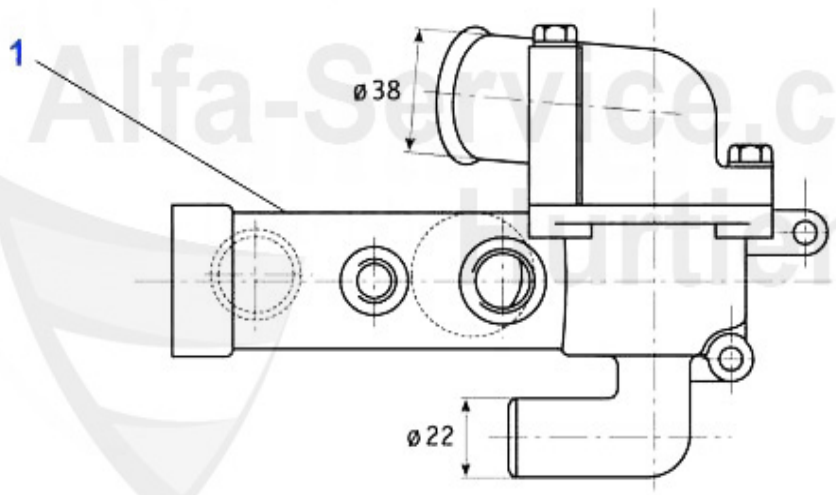

Alfa-Service.com Hartienne

1	TH657187	THERMOSTAT 155,156,166,GTV,SPIDER (916) 6 CYL. (WITH HOUSING)	54.00 EUR

Wasserpumpe/Waterpump 156 V6 24V/GTA

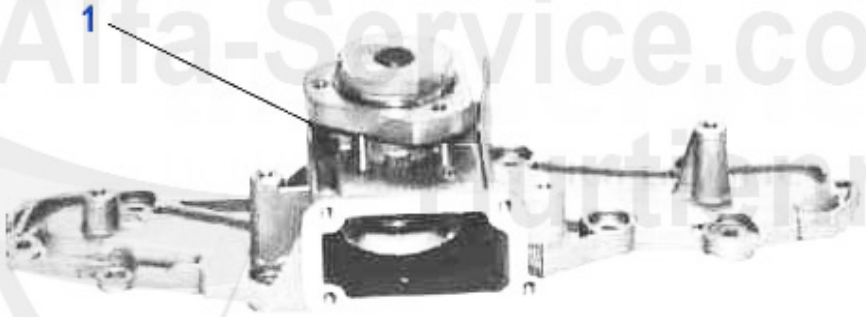

1	WP81355	OE. 60816018 WATERPUMP V6 24V	99.00 EUR

Kühler/Radiator 156 1.9 JTD 8V

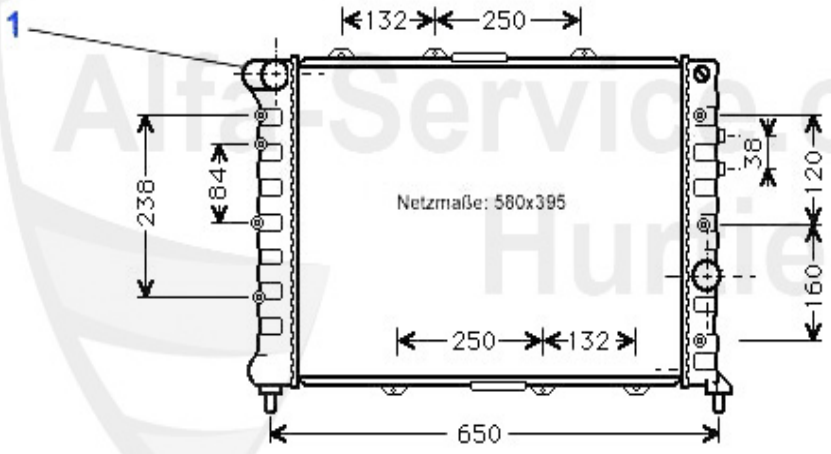

1	MK22998	RADIATOR 156 1.9/2.4 JTD	265.70 EUR

156 > ENGINE > COOLING SYSTEM > 1.9 JTD 8V > THERMOSTAT

Thermostat 156 1.9 JTD 8V

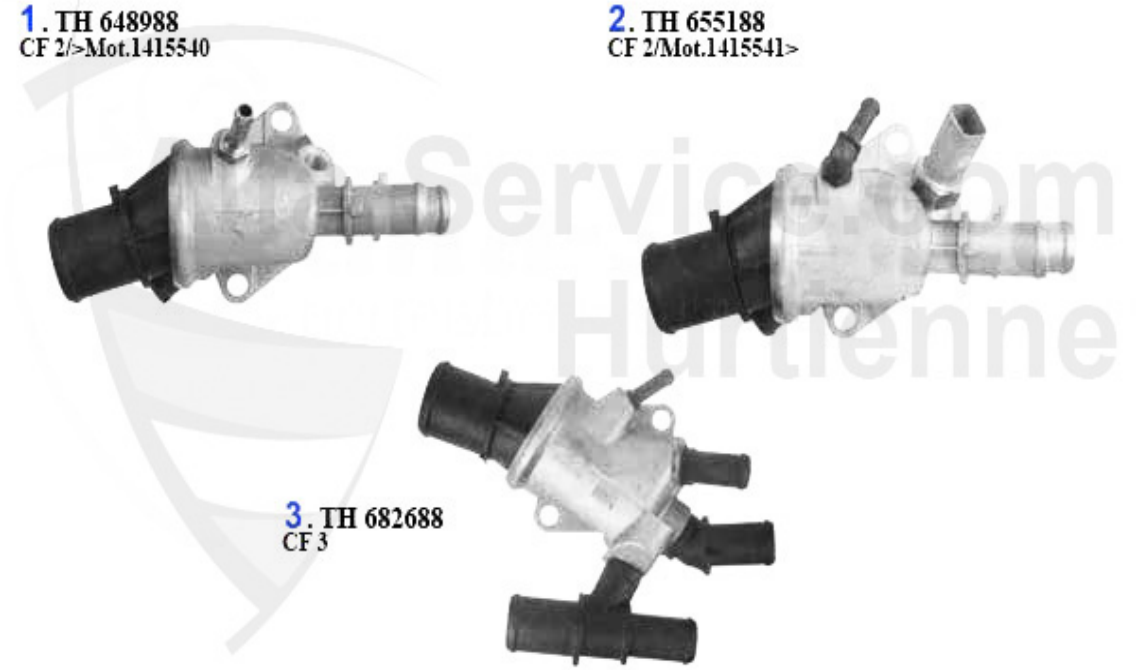

1	TH648988	Thermostat 156 1.9 JTD,Gehäusetherm ostat	43.85 EUR
2	TH655188	Thermostat 145/6,156,1.9 JTD Gehäusethermostat	60.00 EUR
3	TH682688	OE. 46795667 THERMOSTAT 156,166 1.9/2.4 JTD CF3	92.00 EUR

Wasserpumpe/Waterpump 156 1.9 JTD 8V

1	WP15970	OE. 46515970 WATER PUMP 1.9/2.4 8/10 V	60.52 EUR

156 > ENGINE > COOLING SYSTEM > 1.9 JTD 16V > RADIATOR

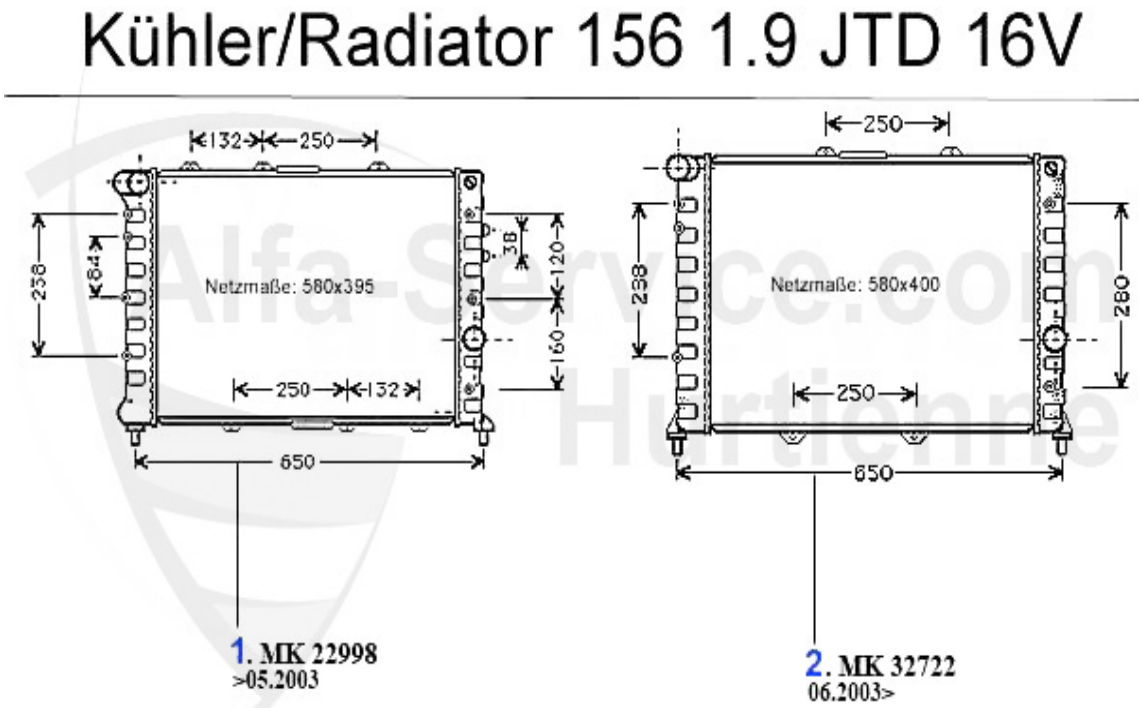

1	MK22998	RADIATOR 156 1.9/2.4 JTD	265.70 EUR
2	MK32722	RADIATOR 156 1.9 16V/2.4 10/20V JTD 01> STARTING FROM # 281384	366.23 EUR

Thermostat 156 1.9 JTD 16V

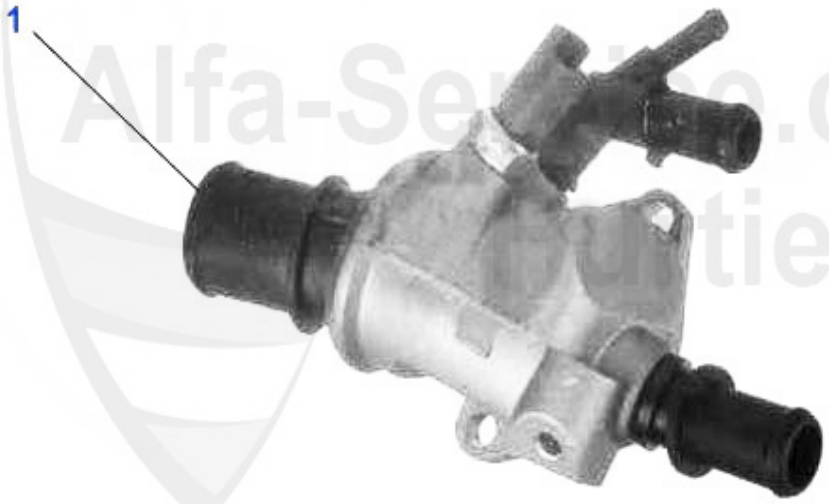

1	TH688288	OE. 55189843 THERMOSTAT 156,166 1.9/2.4 JTD 10/20V	119.00 EUR

Wasserpumpe/Waterpump 156 1.9 JTD 16V

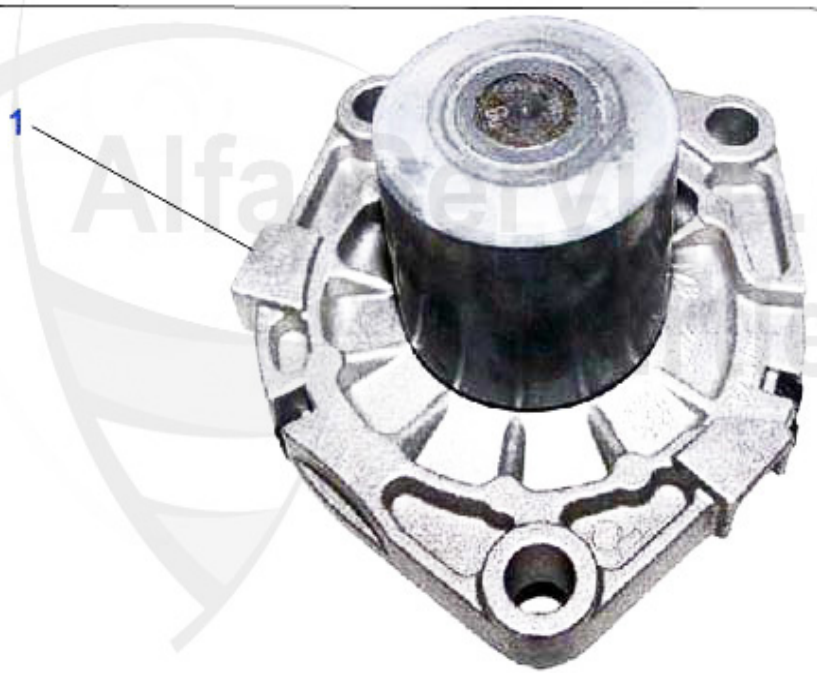

1	WP04051	OE. 46804051 WATERPUMP 1.9/2.4 16/20 V	72.33 EUR

156 > ENGINE > COOLING SYSTEM > 2.4 JTD 10V > RADIATOR

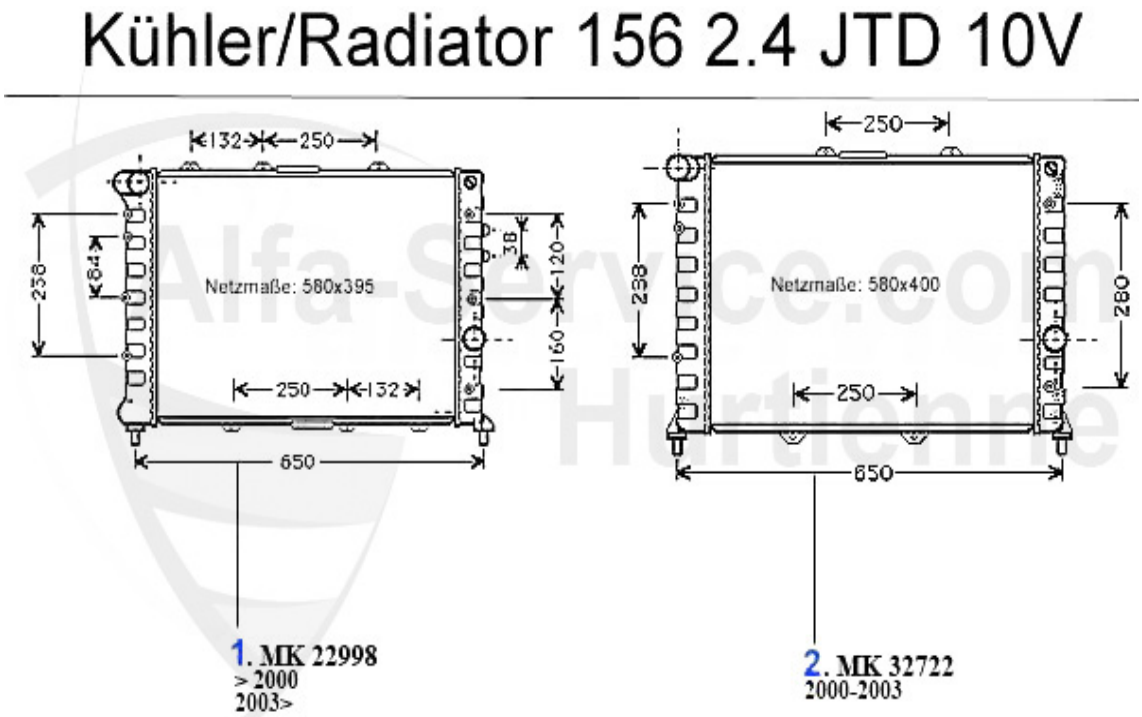

1	MK22998	RADIATOR 156 1.9/2.4 JTD	265.70 EUR
2	MK32722	RADIATOR 156 1.9 16V/2.4 10/20V JTD 01> STARTING FROM # 281384	366.23 EUR

156 > ENGINE > COOLING SYSTEM > 2.4 JTD 10V > THERMOSTAT

Thermostat 156 2.4 JTD 10V

1	TH648988	Thermostat 156 1.9 JTD,Gehäusetherm ostat	43.85 EUR
2	TH655188	Thermostat 145/6,156,1.9 JTD Gehäusethermostat	60.00 EUR
3	TH682588	OE. 46822435 THERMOSTAT 156 2.4 JTD 10V 110 KW	124.95 EUR

Wasserpumpe/Waterpump 156 2.4 JTD 10V

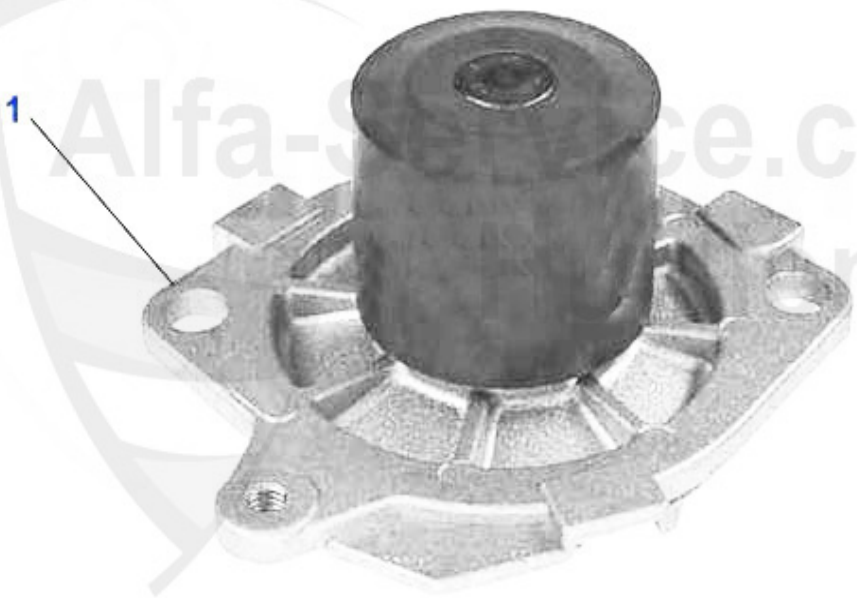

1	WP15970	OE. 46515970 WATER PUMP 1.9/2.4 8/10 V	60.52 EUR

156 > ENGINE > COOLING SYSTEM > 2.4 JTD 20V > RADIATOR

Kühler/Radiator 156 2.4 JTD 20V

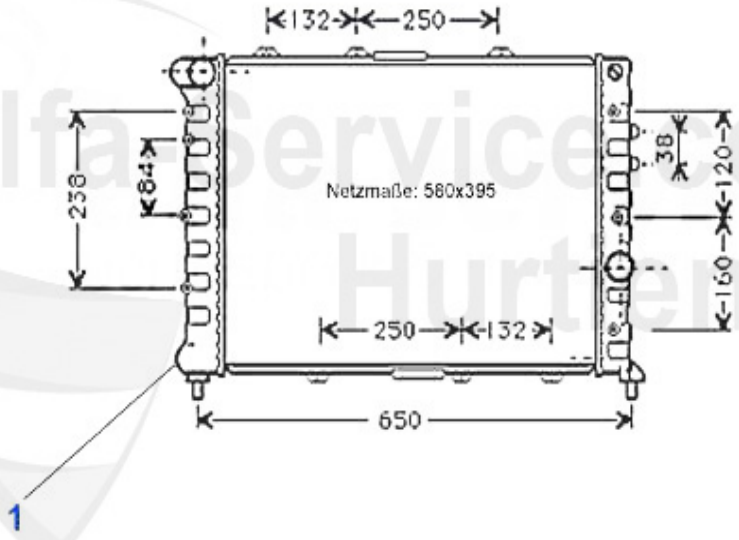

1	MK32722	RADIATOR 156 1.9 16V/2.4 10/20V JTD 01> STARTING FROM # 281384	366.23 EUR

Thermostat 156 2.4 JTD 20V

1	TH688288	OE. 55189843 THERMOSTAT 156,166 1.9/2.4 JTD 10/20V	119.00 EUR

Wasserpumpe/Waterpump 156 2.4 JTD 20V

1	WP04051	OE. 46804051 WATERPUMP 1.9/2.4 16/20 V	72.33 EUR

156 > ENGINE > ENGINE MOUNT > TS16V

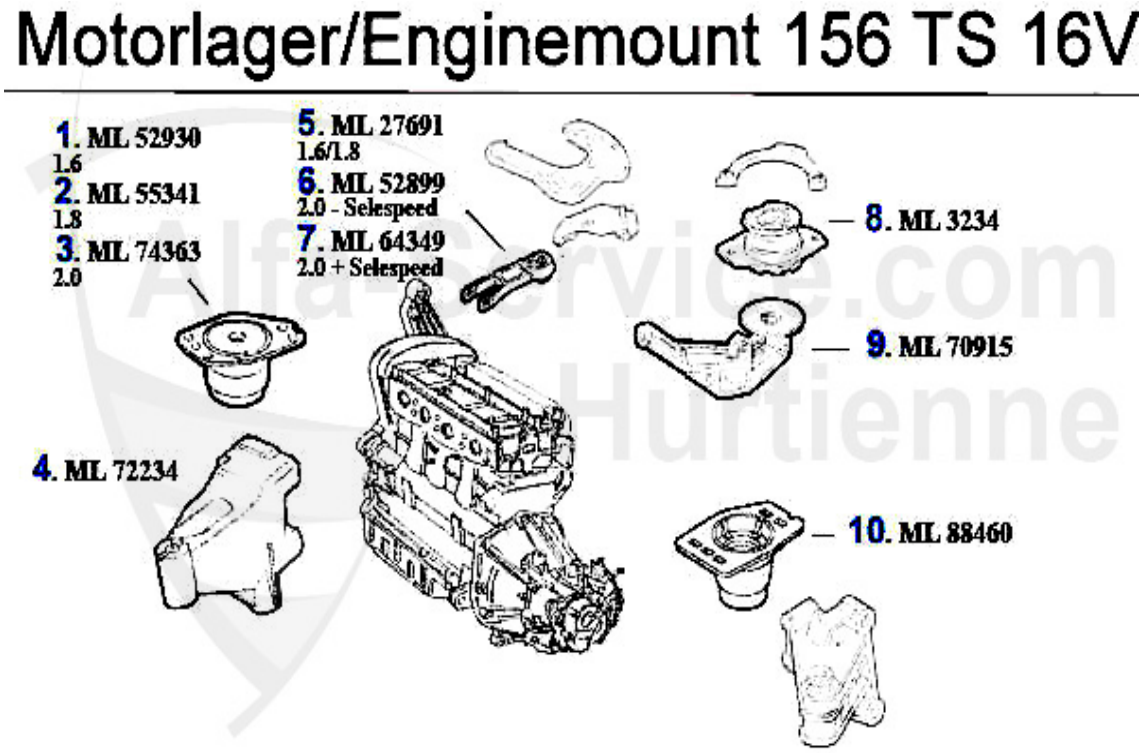

1	ML52930	OE. 46452930 ENGINE MOUNT FL 145/6 1999> 2.0 TS 16V,155 1.6/1.8 TS 16V,156 1.6 TS 16V	149.00 EUR
2	ML55341	OE. 60655341 ENGINE MOUNT FL 156, gtv/spider (916) 1.8 TS 16V	111.82 EUR
3	ML74363	OE. 60674363 ENGINE MOUNT FL 147,156/SW, Nuovo GT 2.0 TS/JTS	83.62 EUR
4	ML72234	OE. 60672234 ENGINEMOUNT FR. 156 2002>, gtv/spider (916) 1998>, Nuovo GT TS 16V	72.00 EUR
5	ML27691	OE. 60627691 ENGINEMOUNT RR 145/6,155, 156,gtv/spider (916),Nuovo GT TS 16V	35.81 EUR
6	ML52899	OE. 60652899 ENGINE MOUNT 145/6 2.0 TS, 147 all,156,gtv/spider (916) 1998>, Nuovo GT TS/JTS (without Selespeed)	33.00 EUR
7	ML64349	OE. 60664349 ENGINE ROD 147,156/SW,Nuovo GT 2.0 TS/JTS Selespeed	36.00 EUR
8	ML3234	OE. 7652240/60808861 ENGINE MOUNT	45.91 EUR
9	ML70915	OE. 7770915 SUPPORT	126.76 EUR
10	ML88460	ENGINE MOUNT 145/6,147 (74KW),155,156, GTV/SPIDER (916)	109.27 EUR

Motorlager/Enginemount 156 JTS

1	ML74363	OE. 60674363 ENGINE MOUNT FL 147,156/SW, Nuovo GT 2.0 TS/JTS	83.62 EUR
2	ML72234	OE. 60672234 ENGINEMOUNT FR. 156 2002>, gtv/spider (916) 1998>, Nuovo GT TS 16V	72.00 EUR
3	ML52899	OE. 60652899 ENGINE MOUNT 145/6 2.0 TS, 147 all,156,gtv/spider (916) 1998>, Nuovo GT TS/JTS (without Selespeed)	33.00 EUR
4	ML64349	OE. 60664349 ENGINE ROD 147,156/SW,Nuovo GT 2.0 TS/JTS Selespeed	36.00 EUR
5	ML3234	OE. 7652240/60808861 ENGINE MOUNT	45.91 EUR
6	ML70915	OE. 7770915 SUPPORT	126.76 EUR
7	ML88460	ENGINE MOUNT 145/6,147 (74KW),155,156, GTV/SPIDER (916)	109.27 EUR

Motorlager/Enginemount 156 V6 24V/GTA

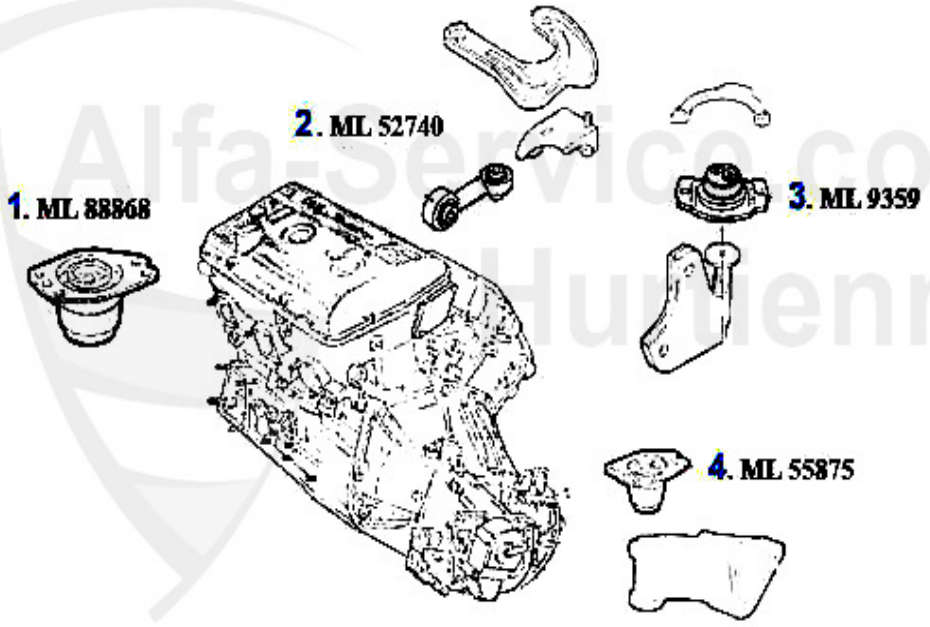

1	ML88868	OE. 60655868 ENGINE MOUNT 147,156,Nuovo GT V6 24V/GTA	97.94 EUR
2	ML52740	OE. 60652740 ENGINE MOUNT 147,156,Nuovo GT V6 24V/GTA	47.34 EUR
3	ML9359	OE.7644686 ENGINE MOUNT REAR 147, 155, 156	55.81 EUR
4	ML55875	OE. 60655875 ENGINEMOUNT REAR 147,156, Nuovo GT 3.2 V6 24V/GTA	59.96 EUR

156 > ENGINE > ENGINE MOUNT > 1.9 JTD 8V

Motorlager/Enginemount 156 1.9 JTD 8V

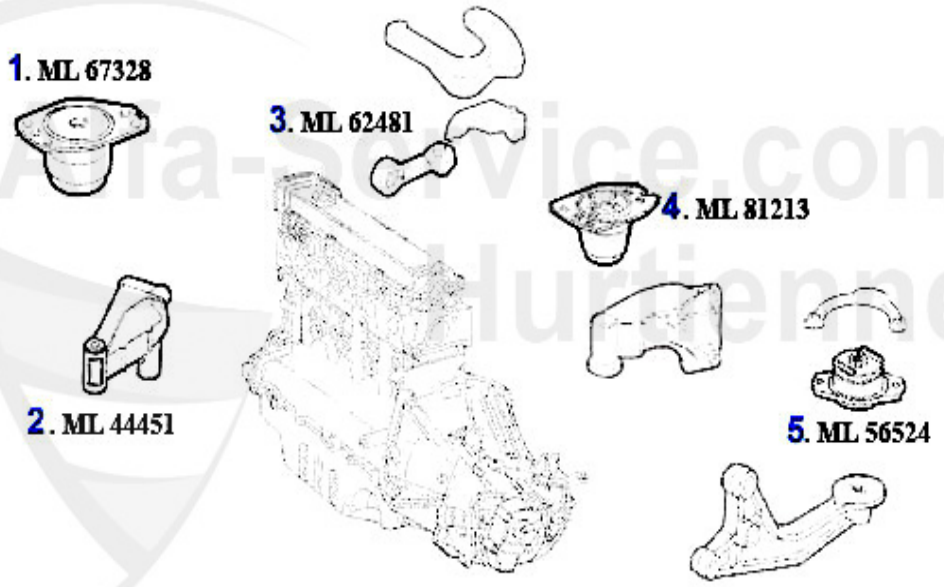

1	ML67328	OE. 46467328 ENGINE MOUNT FL 145/6,147, 156,Nuovo GT JTD	111.82 EUR
2	ML44451	OE. 46744451 ENGINE MOUNT 147,156,Nuovo GT 1.9 JTD 8/16V	95.00 EUR
3	ML62481	OE. 60662481 ENGINE MOUNT 145/6,147,156, Nuovo GT 1.9 JTD	61.25 EUR
4	ML81213	OE. 46781213 ENGINE MOUNT RL 145/6,147, 156,Nuovo GT JTD	66.68 EUR
5	ML56524	OE. 60656524 ENGINEMOUNT 145/6 1999>, 147,156,Nuovo GT 1.9 JTD 8/16V	40.01 EUR

156 > ENGINE > ENGINE MOUNT > 1.9 JTD 16V

Motorlager/Enginemount 156 1.9 JTD 16V

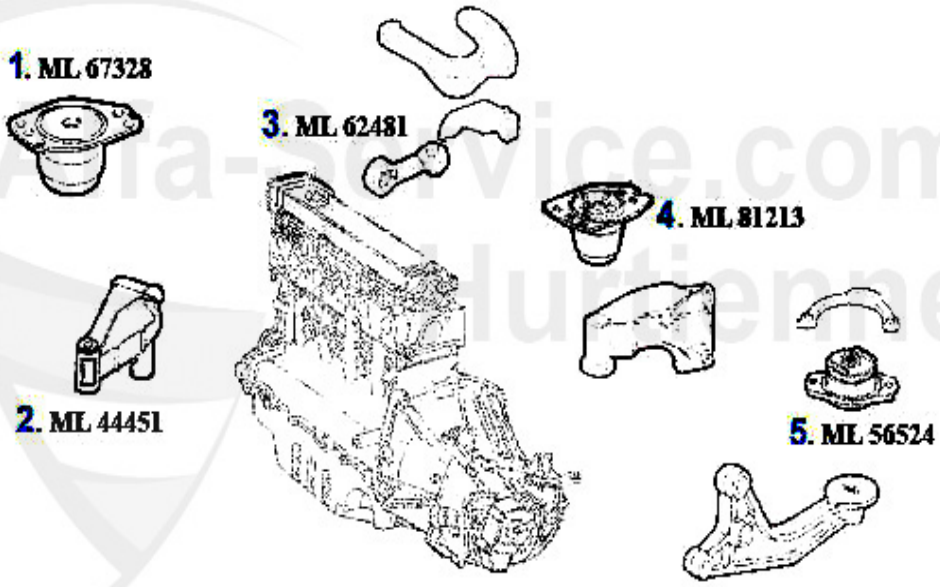

1	ML67328	OE. 46467328 ENGINE MOUNT FL 145/6,147, 156,Nuovo GT JTD	111.82 EUR
2	ML44451	OE. 46744451 ENGINE MOUNT 147,156,Nuovo GT 1.9 JTD 8/16V	95.00 EUR
3	ML62481	OE. 60662481 ENGINE MOUNT 145/6,147,156, Nuovo GT 1.9 JTD	61.25 EUR
4	ML81213	OE. 46781213 ENGINE MOUNT RL 145/6,147, 156,Nuovo GT JTD	66.68 EUR
5	ML56524	OE. 60656524 ENGINEMOUNT 145/6 1999>, 147,156,Nuovo GT 1.9 JTD 8/16V	40.01 EUR

156 > ENGINE > ENGINE MOUNT > 2.4 JTD 10V

Motorlager/Enginemount 156 2.4 JTD 10V

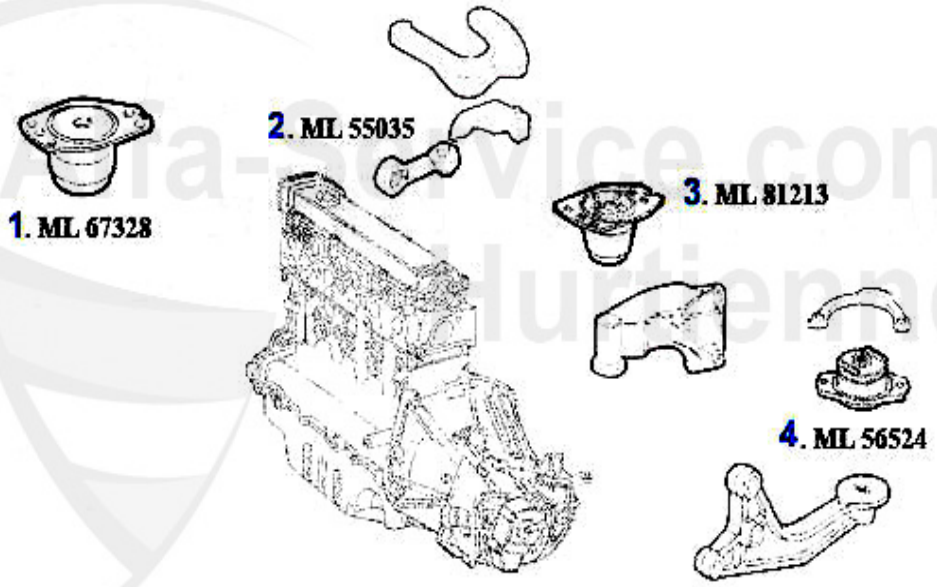

1	ML67328	OE. 46467328 ENGINE MOUNT FL 145/6,147, 156,Nuovo GT JTD	111.82 EUR
2	ML55035	OE. 60655035 ENGINE ROD 156 2.4 JTD 10/20V	60.65 EUR
3	ML81213	OE. 46781213 ENGINE MOUNT RL 145/6,147, 156,Nuovo GT JTD	66.68 EUR
4	ML56524	OE. 60656524 ENGINEMOUNT 145/6 1999>, 147,156,Nuovo GT 1.9 JTD 8/16V	40.01 EUR

156 > ENGINE > ENGINE MOUNT > 156 2.4 JTD 20V

Motorlager/Enginemount 156 2.4 JTD 20V

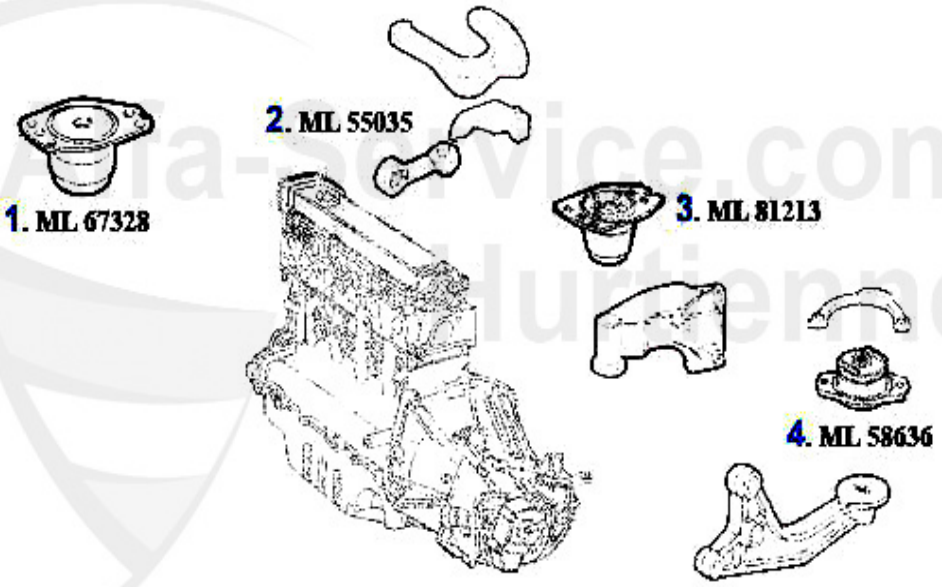

1	ML67328	OE. 46467328 ENGINE MOUNT FL 145/6,147, 156,Nuovo GT JTD	111.82 EUR
2	ML55035	OE. 60655035 ENGINE ROD 156 2.4 JTD 10/20V	60.65 EUR
3	ML81213	OE. 46781213 ENGINE MOUNT RL 145/6,147, 156,Nuovo GT JTD	66.68 EUR
4	ML58636	OE. 46858636 ENGINEMOUNT REAR 156 2.4 JTD 20V	40.01 EUR

156 > ENGINE > VALVE GEAR > TS16V > CAMSHAFT

Nockenwelle/Camshaft 156 TS 16V

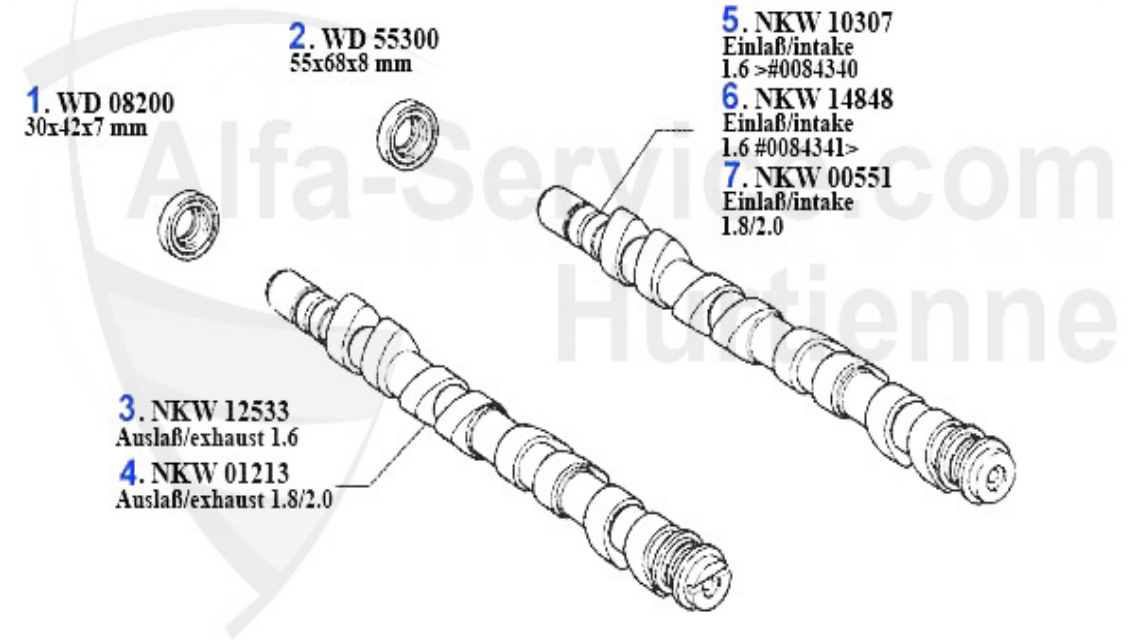

1	WD08200	Siri Nockenwelle 145/6,155,156,gtv/ spider(916),166 diverse Bj. 96-01	11.84 EUR
2	WD55300	siri nockenwelle 145/6,155,156 1.6,1.7,1.8,2.0 16V TS	16.97 EUR
3	NKW12533	Nockenwelle (Auslaß) 145/6,147,155, 156 1.4/1.6 TS 16V	243.13 EUR
4	NKW01213	OE. 60601213 CAMSHAFT	336.69 EUR
5	NKW10307	Nockenwelle (Einlaß) 145/6,155,156 1.4/1.6 TS 16V	242.11 EUR
6	NKW14848	Nockenwelle 145/6 1.6 TS 16V # 1650 88>, 156 1.6 TS 16V #84340>	230.82 EUR
7	NKW00551	OE. 60600551 CAMSHAFT	279.76 EUR

Ventiltrieb/Valve Train 156 TS 16V

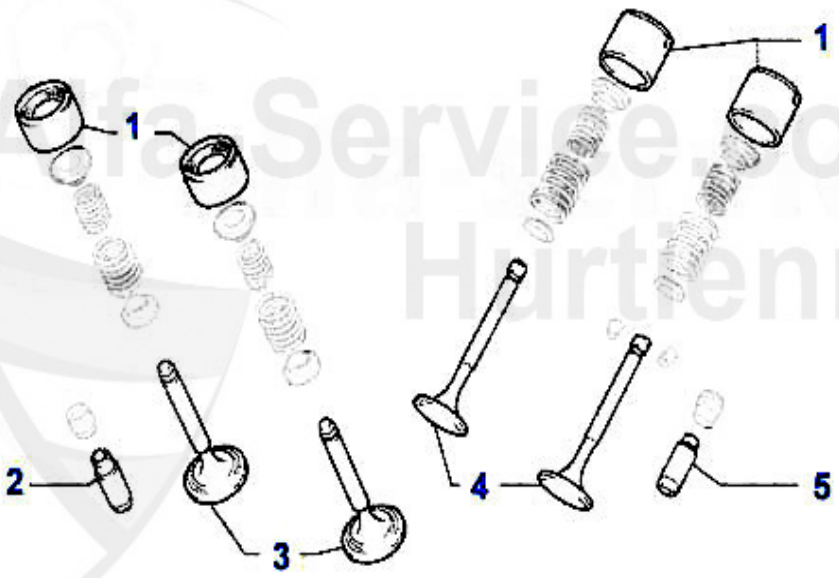

1	HST12769	HYDRAULIC VALVE LIFTER 145/6,147,155 156,166,GTV/SPIDER(916)16V TS ALL!	14.90 EUR
2	VFA11582	Ventilführung Auslaß + 0.05 TS 16V	21.03 EUR
3	VA91934	Ventil-Auslaß 145/6,155,156,spider/ gtv(916) 1.6/1.8/2.0 TS 16V	18.05 EUR
4	VE91933	Ventil-Einlaß 145/6,155,156,spider/ gtv(916) 1.6/1.8/2.0 TS 16V	15.28 EUR
5	VFE11575	Ventilführung Einlaß +0.05 TS 16V	21.03 EUR

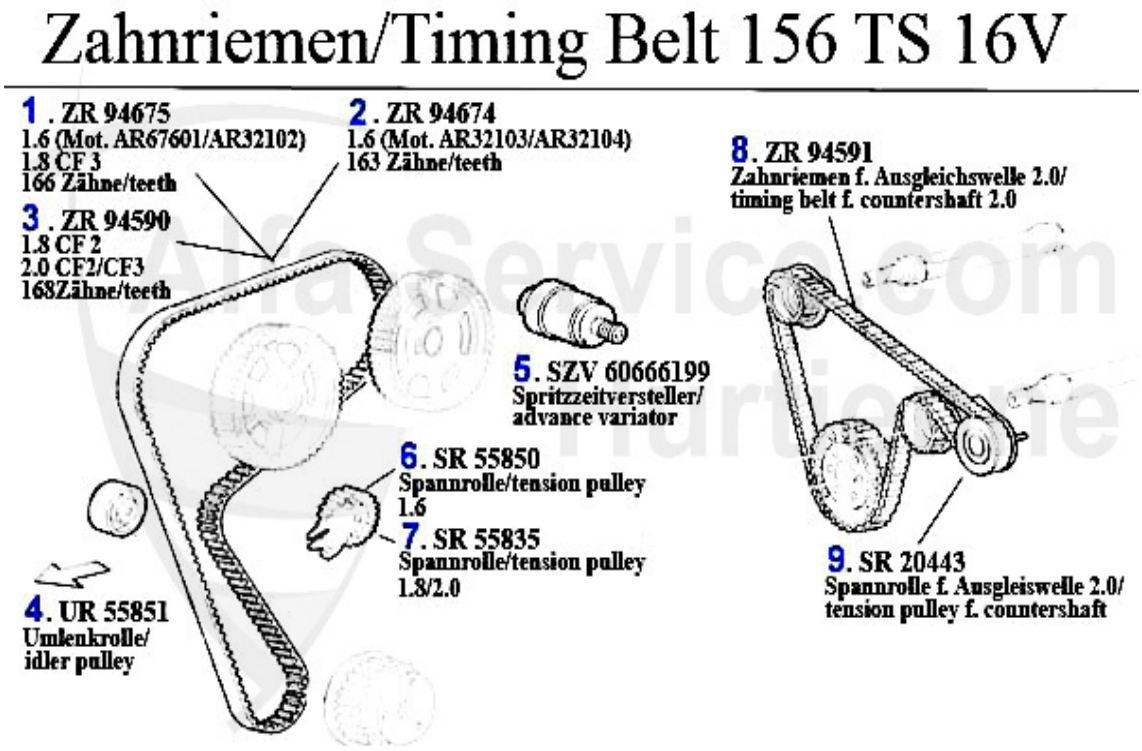

1	ZR94675	Zahnriemen 166SHPN240H 145/6,155/6 4-Zylinder(Mot.CF2/3) Nockenwelle Hochtemperatur-Ausführung ACHTUNG!!! auf Motor # achten	42.58 EUR
2	ZR94674	Zahnriemen 163SHPN240H 145/6 1.4 ie 16V TS,147 1.6 16V TS,156 1.6 16V T S Nockenwelle Hochtemperatur-Ausführung	42.98 EUR
3	ZR94590	OE.60814319 TIMING BELT 168SHPN240H 145/6 1.8/2.0 IE/16V/TS, 147 2.0 16V TS,155 2.0 16V TS,156 1.8,2.0 IE 16V/TS	40.94 EUR
4	UR55851	OE. 60671573 DEFLECTION PULLEY 1.8 TS 16V 145/6, 147, 155, 156, 166, Nuovo GT, gtv/spider (916)	33.50 EUR
5	SZV60666199	OE. 71738360/55202772 ADVANCE VARIATOR TS 16V	198.99 EUR
6	SR55850	Spannrolle Zahnriemen 145/6 1.4 ie 16V TS,155/6 1.6 ie 16V TS/2.0 JTS/ gtv/spider (916) 2.0 JTS	72.98 EUR
7	SR55835	OE. 55192239 IDLER PULLEY 1.8 TS 16V 145/6, 147, 155, 156, 166, gtv/spider (916)	89.50 EUR
8	ZR94591	Zahnriemen 130SLDD150H 145/6,155/6 2.0 16V TS Ausgleichswelle,Hochtemp eratur-Ausführung	61.55 EUR
9	SR20443	Spannrolle für Ausgleichswelle 2.0 TS gtv/spider (916),155,156 Mot.- Nr. 0134319>	38.20 EUR

156 > ENGINE > VALVE GEAR > 2.0 JTS > CAMSHAFT

Nockenwelle/Camshaft 156 JTS

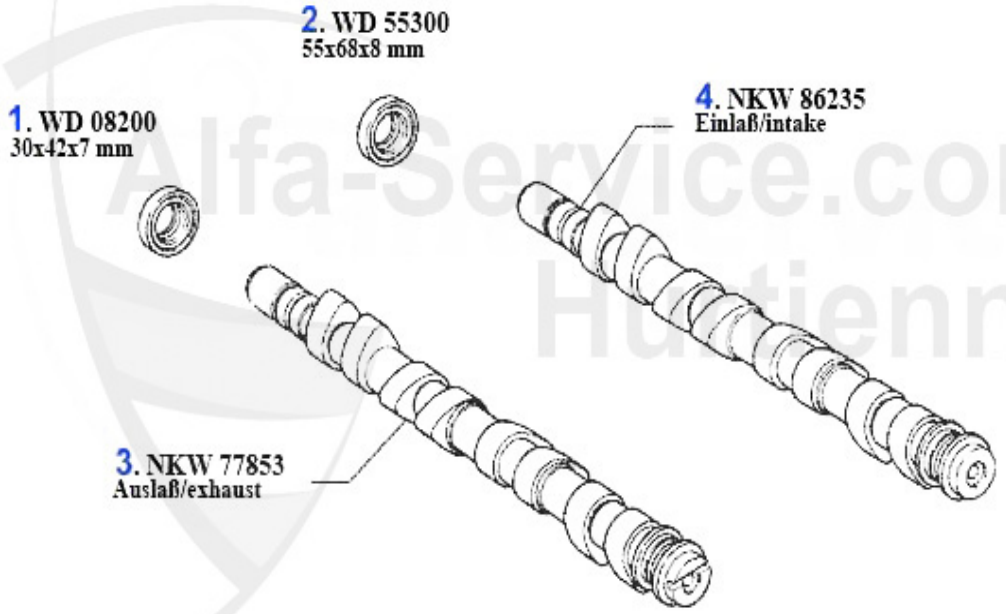

1	WD08200	Siri Nockenwelle 145/6,155,156,gtv/ spider(916),166 diverse Bj. 96-01	11.84 EUR
2	WD55300	siri nockenwelle 145/6,155,156 1.6,1.7,1.8,2.0 16V TS	16.97 EUR
3	NKW77853	OE. 60677853 CAMSHAFT EXHAUST 2.0 JTS	479.00 EUR
4	NKW86235	OE. 55186235 CAMSHAFT INTAKE 2.0 JTS	458.99 EUR

156 > ENGINE > VALVE GEAR > 2.0 JTS > VALVE MECHANISM

Ventiltrieb/Valve Train 156 JTS

Alfa Service Hurtienne .com

1	HST12769	HYDRAULIC VALVE LIFTER 145/6,147,155 156,166,GTV/SPIDER(916)16V TS ALL!	14.90 EUR
2	VFA11582	Ventilführung Auslaß + 0.05 TS 16V	21.03 EUR
3	VA91934	Ventil-Auslaß 145/6,155,156,spider/ gtv(916) 1.6/1.8/2.0 TS 16V	18.05 EUR
4	VE91933	Ventil-Einlaß 145/6,155,156,spider/ gtv(916) 1.6/1.8/2.0 TS 16V	15.28 EUR
5	VFE11575	Ventilführung Einlaß +0.05 TS 16V	21.03 EUR

156 > ENGINE > VALVE GEAR > 2.0 JTS > TIMINGBELT

Zahnriemen/Timing Belt 156 JTS

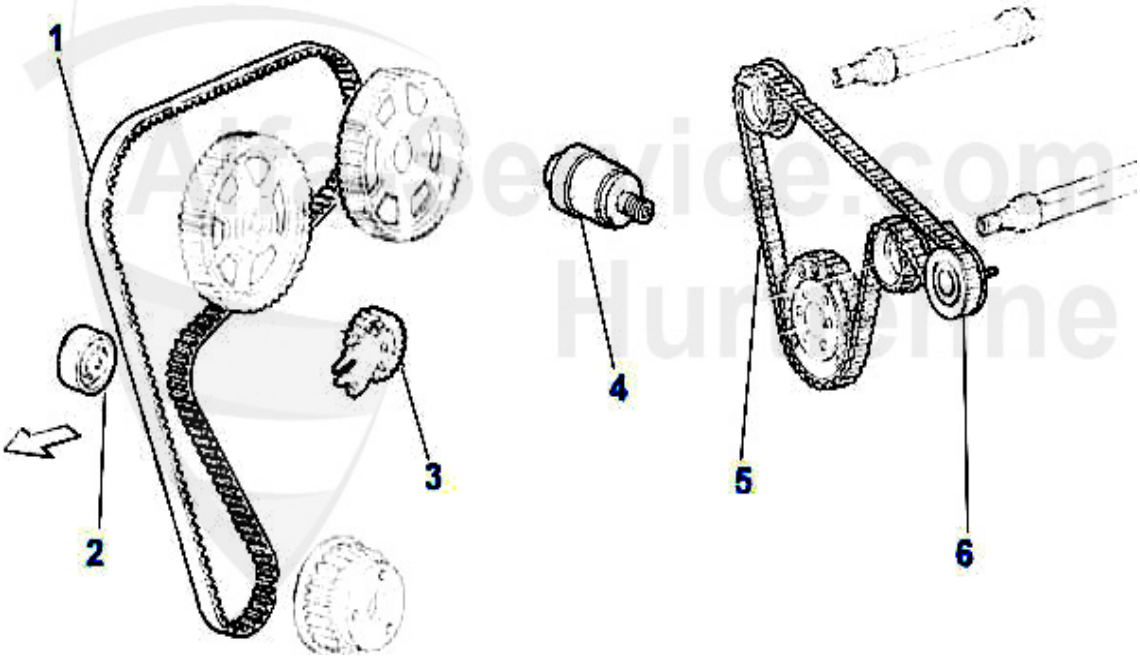

1	ZR94590	OE.60814319 TIMING BELT 168SHPN240H 145/6 1.8/2.0 IE/16V/TS, 147 2.0 16V TS,155 2.0 16V TS,156 1.8,2.0 IE 16V/TS	40.94 EUR
2	UR55851	OE. 60671573 DEFLECTION PULLEY 1.8 TS 16V 145/6, 147, 155, 156, 166, Nuovo GT, gtv/spider (916)	33.50 EUR
3	SR55850	Spannrolle Zahnriemen 145/6 1.4 ie 16V TS,155/6 1.6 ie 16V TS/2.0 JTS/ gtv/spider (916) 2.0 JTS	72.98 EUR
4	SZV60666199	OE. 71738360/55202772 ADVANCE VARIATOR TS 16V	198.99 EUR
5	ZR94591	Zahnriemen 130SLDD150H 145/6,155/6 2.0 16V TS Ausgleichswelle,Hochtemp eratur-Ausführung	61.55 EUR
6	SR20443	Spannrolle für Ausgleichswelle 2.0 TS gtv/spider (916),155,156 Mot.- Nr. 0134319>	38.20 EUR

156 > ENGINE > VALVE GEAR > 2.5/3.2 V6 24V/GTA > CAMSHAFT

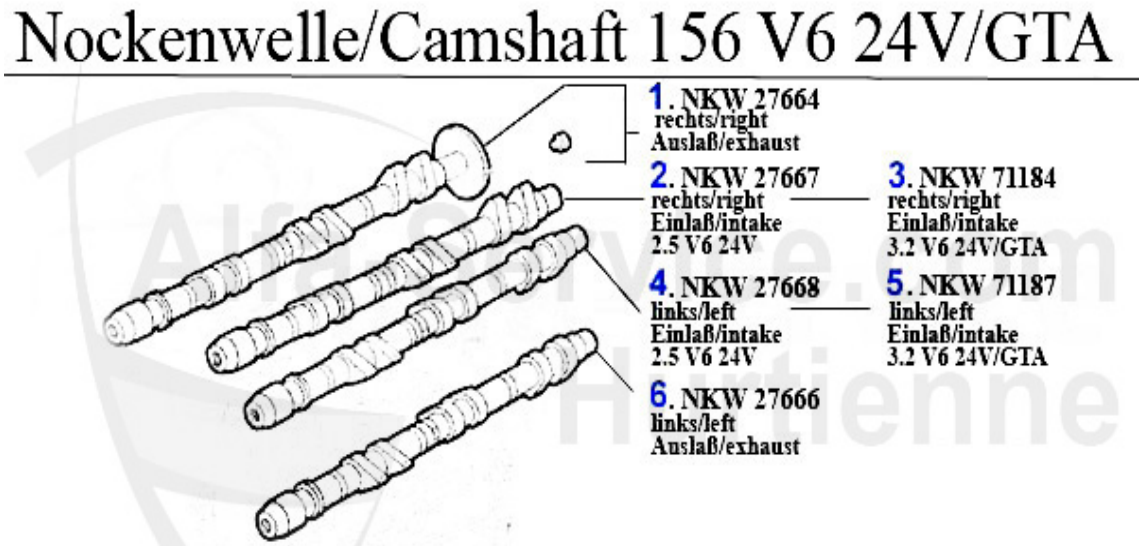

1	NKW27664	Nockenwelle rechts (Auslaß) 156,166 2.5 V6 24V,gtv/spider (916) Bj. 98> 3.0 V6 24V,Nouvo GT 3.2	416.74 EUR
2	NKW27667	Nockenwelle rechts (Einlaß) 156,166 2.5 V6 24V,gtv/spider (916) 3.0 V6 24V	253.59 EUR
3	NKW71184	OE. 60671184 Camshaft R Intake 3.2 V6 24V	379.00 EUR
4	NKW27668	Nockenwelle links (Einlaß) 156,166 2.5 V6 24V,gtv/spider (916) Bj. 98> 3.0 V6 24V	253.59 EUR
5	NKW71187	OE. 60671187 Camshaft R Intake 3.2 V6 24V	399.00 EUR
6	NKW27666	Nockenwelle links (Auslaß) 156,166 2.5 V6 24V,gtv/spider (916) Bj. 98> 3.0 V 24V,Nuovo GT 3.2	***

156 > ENGINE > VALVE GEAR > 2.5/3.2 V6 24V/GTA > VALVE MECHANISM

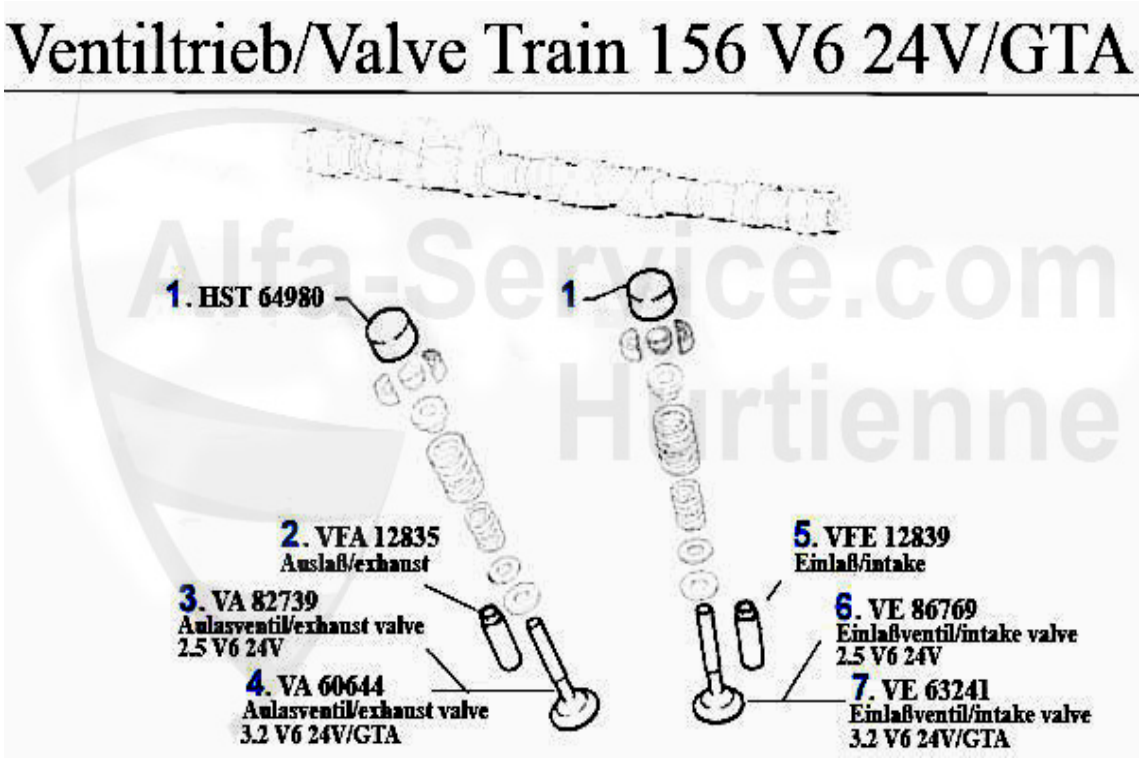

1	HST64980	Hydraulic Tappet # 606 64 980/605 07 563	21.85 EUR
2	VFA12835	Ventilführung Auslaß 147,156,164/ Super,gtv/spider (916),Nuovo GT V6 24V	32.50 EUR
3	VA82739	OE. 60582739 VALVE EXHAUST 2.5 24V	42.49 EUR
4	VA60644	Exhaust Valve 3.0/3.2 24V	40.01 EUR
5	VFE12839	Ventilführung Einlaß 147,156,164/ Super,gtv/spider (916),Nuovo GT V6 24V	32.50 EUR
6	VE86769	OE. 55186769 VALVE INTAKE 2.5 24V	26.78 EUR
7	VE63241	Ventil-Einlaß 3.0 V6 24V/3.2 GTA 14 7,156,164,166 spider/gtv (916),Nuov o GT	22.05 EUR

Zahnriemen/Timing Belt 156 V6 24V/GTA

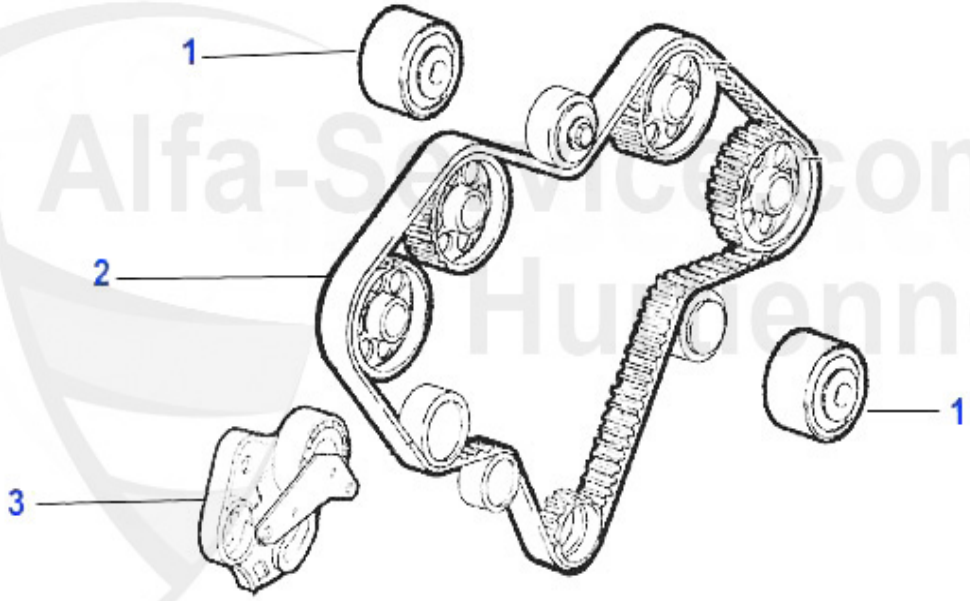

1	UR55876	IDLER PULLEY FOR DRIVE BELT 147,156,166, GTV/SPIDER (916) V6 24V	72.00 EUR
2	ZR94741	TIMING BELT 185H9.5P280 147,156,166,GTV/ SPIDER (916),Nuovo GT V6 24V (HIGH TEMPERATURE VERSION)	77.95 EUR
3	SR55875	OE. 55196536 BELTSTRETCHER	169.49 EUR

Nockenwelle/Camshaft 156 1.9 JTD 8V

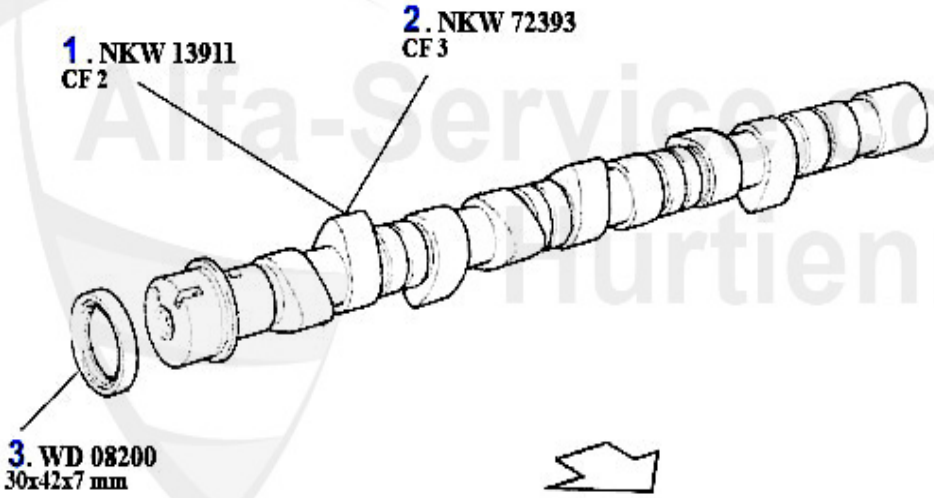

1	NKW13911	Nockenwelle 156,145/6 1.9 JTD (CF2)	204.14 EUR
2	NKW72393	OE. 46772393 Camshaft 1.9 JTD 8V	379.00 EUR
3	WD08200	Siri Nockenwelle 145/6,155,156,gtv/ spider(916),166 diverse Bj. 96-01	11.84 EUR

Ventiltrieb/Valve Train 156 1.9 JTD 8V

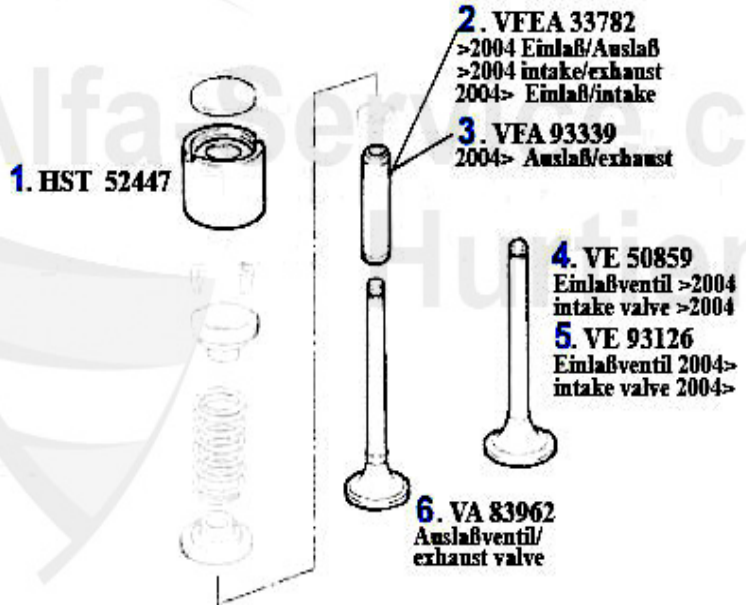

1	HST52447	Hydrostössel 145/6,155,156,166 TD/ JTD	14.26 EUR
2	VFEA33782	Ventilführung Ein-/Auslaß +0.05 JTD 8/10V 145/6,147,156,166	4.11 EUR
3	VFA93339	OE. 55193339 VALVE GUIDE INTAKE 1.9/2.4 JTD 8/10V 6.2004>	***
4	VE50859	Ventil-Einlaß 145/6,147,156,166 JTD 8/10V	21.03 EUR
5	VE93126	Ventil-Einlaß 147,156,166 JTD 8/10V Bj. 6.04>	20.21 EUR
6	VA83962	Ventil-Auslaß 145/6,147,156,166 JTD 8/10V	32.83 EUR

Zahnriemen/Timing Belt 156 1.9 JTD 8V

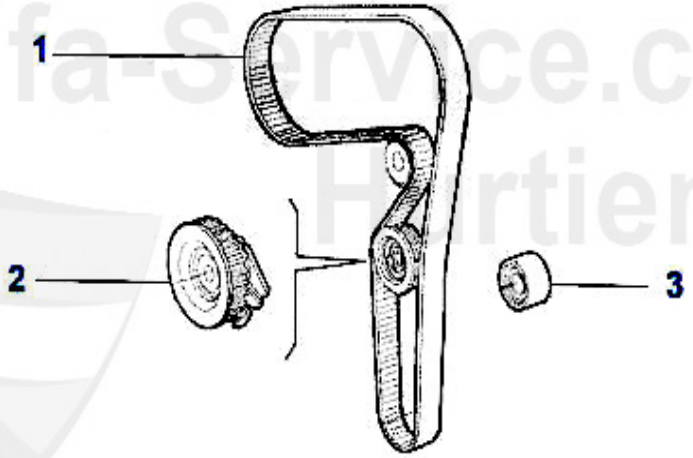

Alfa-Service.com Hartienne

1	ZR94713	OE.60814603 DRIVE BELT 190SHPN240H 145/6, 156,166 1.9/2.4 JTD CAMSHAFT HIGH TEMPERATURE VERSION	43.60 EUR
2	SR55844	TENSIONING PULLEY TIMING BELT 145/6/7 , 156 , 166 1,9 & 2,4 JTD	68.22 EUR
3	UR55842	GUIDE PULLEY TIMING BELT 145/6/7,156 , 166 1,9 & 2,4 JTD	34.77 EUR

Nockenwelle/Camshaft 156 1.9 JTD 16V

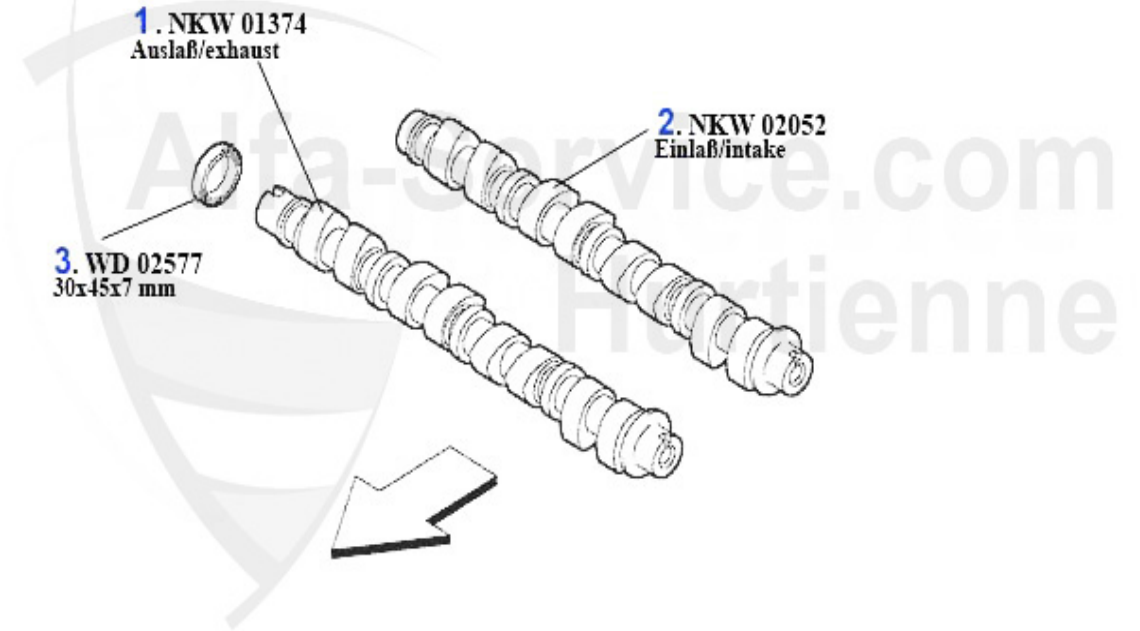

1	NKW01374	Nockenwelle Auslaß 147,156,Nuovo GT 1.9 JTD 16V	179.52 EUR
2	NKW02052	Nockenwelle Einlaß 147,156,Nuovo GT 1.9 JTD 16V	208.25 EUR
3	WD02577	Siri Nockenwelle 147,156,166,Nuovo GT 1.9/2.4 JTD 16V/20V	5.90 EUR

Ventiltrieb/Timing Train 156 1.9 JTD 10V

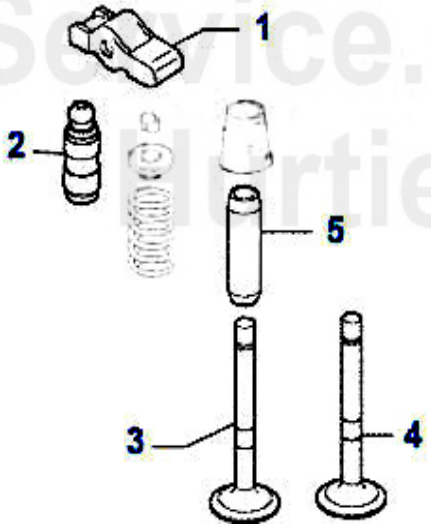

1	KH64765	Kipphebel 147,156,166,Nuovo GT JTD 16/20V	10.67 EUR
2	HST67972	Stössel 147,156,166,Nuovo GT JTD 16/20V	35.11 EUR
3	VE95535	OE. 55195535 Valve Intake JTD 16/20V	18.98 EUR
4	VA87902	OE. 46787902 Valve-Exhaust JTD 16/20V	20.00 EUR
5	VFEA86786	OE. 55186786 Valve Guide Intake/Exhaust JTD 16/20V	13.34 EUR

Zahnriemen/Timing Belt 156 1.9 JTD 16V

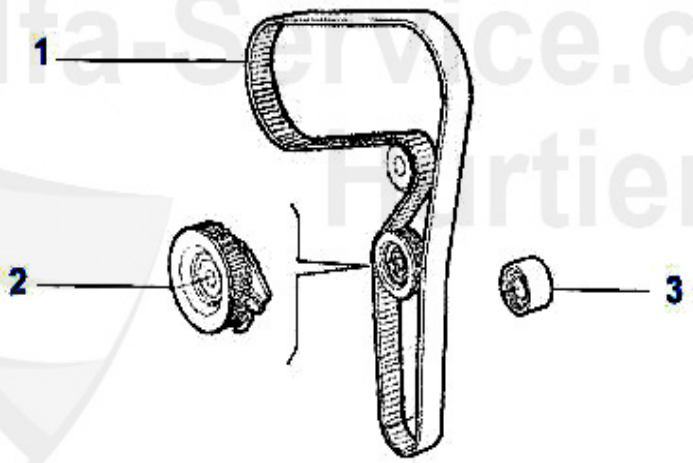

1	ZR94958	Zahnriemen 147,156,166,Nuovo GT JTD 16/20V	58.48 EUR
2	SR55844	TENSIONING PULLEY TIMING BELT 145/6/7 , 156 , 166 1,9 & 2,4 JTD	68.22 EUR
3	UR55842	GUIDE PULLEY TIMING BELT 145/6/7,156 , 166 1,9 & 2,4 JTD	34.77 EUR

Nockenwelle 156 2.4 JTD 10V

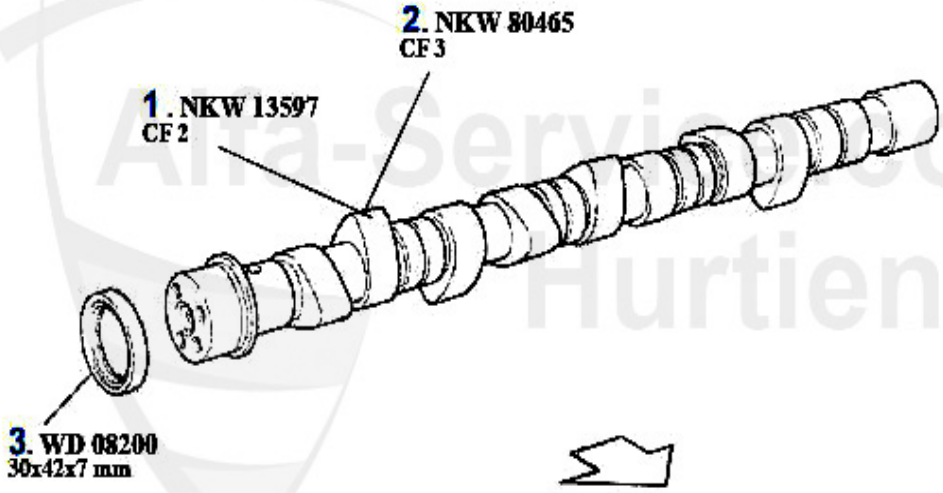

1	NKW13597	Nockenwelle 156,166 2.4 JTD CF2 (10 3 KW)	386.75 EUR
2	NKW80465	OE. 46780465 CAMSHAFT 2.4 JTD 10V (CF3)	328.27 EUR
3	WD08200	Siri Nockenwelle 145/6,155,156,gtv/ spider(916),166 diverse Bj. 96-01	11.84 EUR

Ventiltrieb/Valve Train 156 2.4 JTD 10V

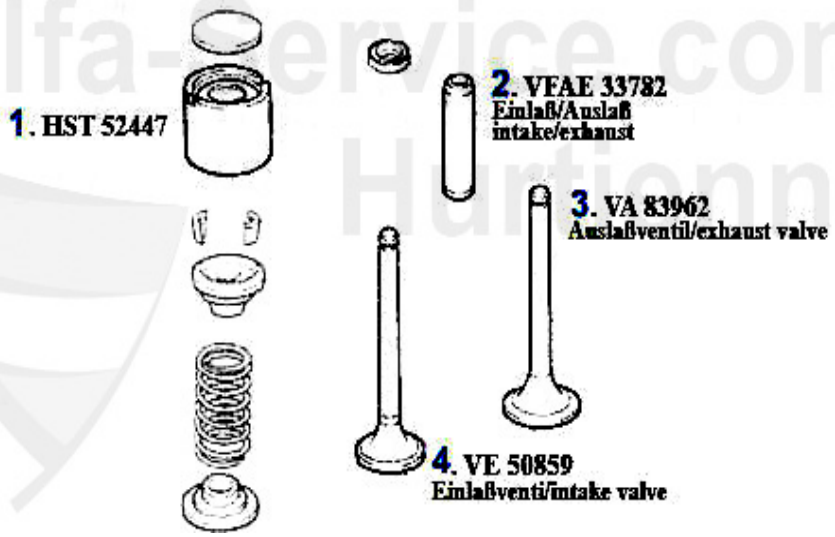

1	HST52447	Hydrostössel 145/6,155,156,166 TD/ JTD	14.26 EUR
2	VFEA33782	Ventilführung Ein-/Auslaß +0.05 JTD 8/10V 145/6,147,156,166	4.11 EUR
3	VA83962	Ventil-Auslaß 145/6,147,156,166 JTD 8/10V	32.83 EUR
4	VE50859	Ventil-Einlaß 145/6,147,156,166 JTD 8/10V	21.03 EUR

Zahnriemen/Timing Belt 156 2.4 JTD 10V

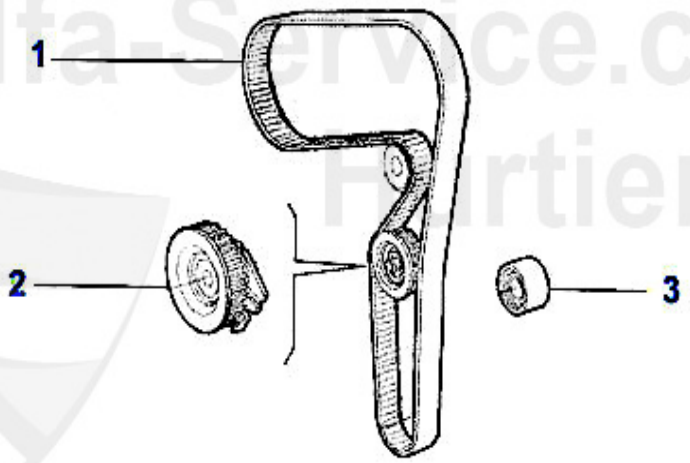

1	ZR94713	OE.60814603 DRIVE BELT 190SHPN240H 145/6, 156,166 1.9/2.4 JTD CAMSHAFT HIGH TEMPERATURE VERSION	43.60 EUR
2	SR55844	TENSIONING PULLEY TIMING BELT 145/6/7 , 156 , 166 1,9 & 2,4 JTD	68.22 EUR
3	UR55842	GUIDE PULLEY TIMING BELT 145/6/7,156 , 166 1,9 & 2,4 JTD	34.77 EUR

Nockenwelle/Camshaft 156 2.4 JTD 20V

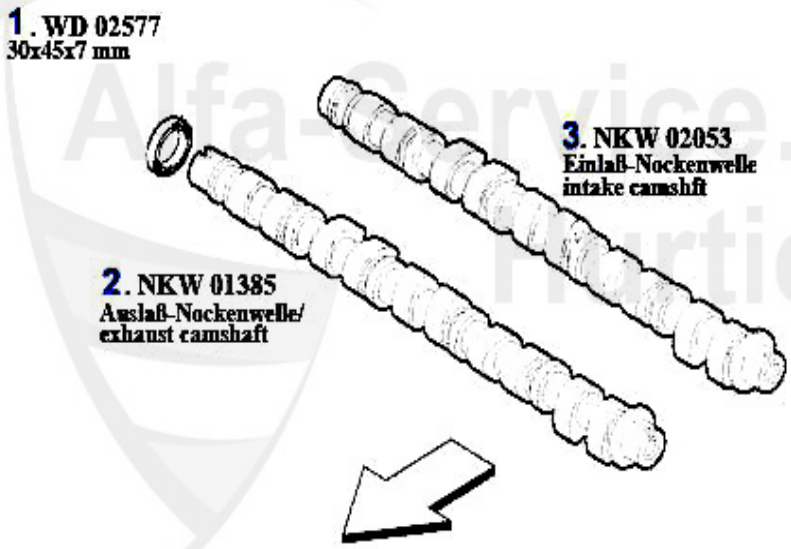

1	WD02577	Siri Nockenwelle 147,156,166,Nuovo GT 1.9/2.4 JTD 16V/20V	5.90 EUR
2	NKW01385	OE. 73501385 CAMSHAFT EXHAUST 2.4 JTD 20V	299.00 EUR
3	NKW02053	OE. 46802053 CAMSHAFT INTAKE 2.4 JTD 20V	183.63 EUR

Ventiltrieb/Valve Train 156 2.4 JTD 20V

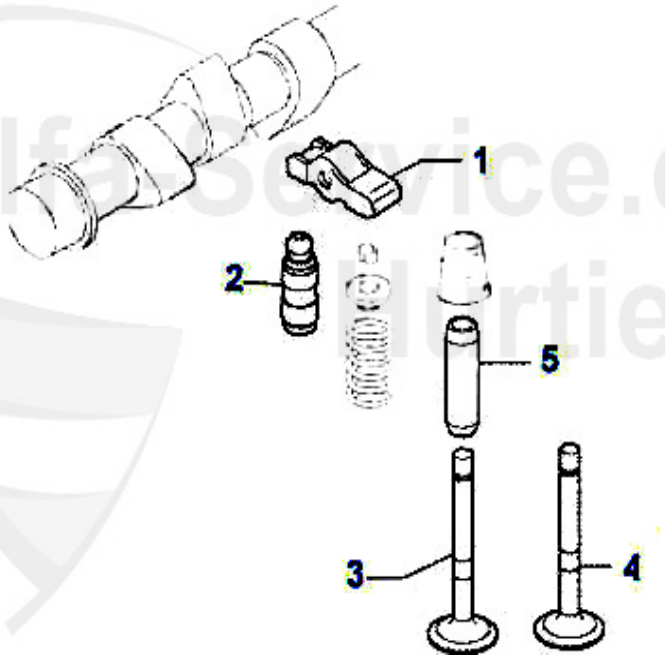

1	KH64765	Kipphebel 147,156,166,Nuovo GT JTD 16/20V	10.67 EUR
2	HST67972	Stössel 147,156,166,Nuovo GT JTD 16/20V	35.11 EUR
3	VE95535	OE. 55195535 Valve Intake JTD 16/20V	18.98 EUR
4	VA87902	OE. 46787902 Valve-Exhaust JTD 16/20V	20.00 EUR
5	VFEA86786	OE. 55186786 Valve Guide Intake/Exhaust JTD 16/20V	13.34 EUR

Zahnriemen/Timing Belt 156 2.4 JTD 20V

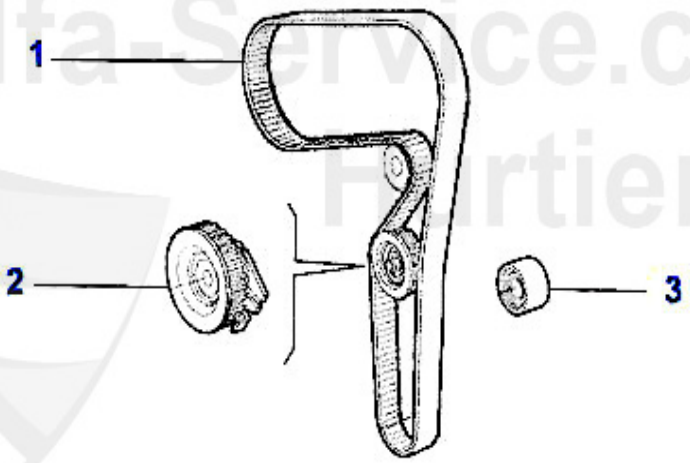

1	ZR94958	Zahnriemen 147,156,166,Nuovo GT JTD 16/20V	58.48 EUR
2	SR55844	TENSIONING PULLEY TIMING BELT 145/6/7 , 156 , 166 1,9 & 2,4 JTD	68.22 EUR
3	UR55842	GUIDE PULLEY TIMING BELT 145/6/7,156 , 166 1,9 & 2,4 JTD	34.77 EUR

156 > FILTER > TS 16V

1	OF519	OE. 46808398/71736159 OILFILTER	7.79 EUR
2	LF149	AIR FILTER 147 GTA,156 2.0 TS/JTS/V6 24V/JTD,NUOVO GT V6 24V, ROUND	14.77 EUR
3	KF57	Kraftstoff-Filter 145/6,147,156 TS 16V,Leitungsfilter	10.77 EUR
4	IF305	INDOOR FILTER 156 >02, FIRM	20.00 EUR
5	IF380	OE.46799653 pollen filter 147,156 2001>,Nuovo GT, square carbon filter	17.23 EUR

156 > FILTER > 2.0 JTS

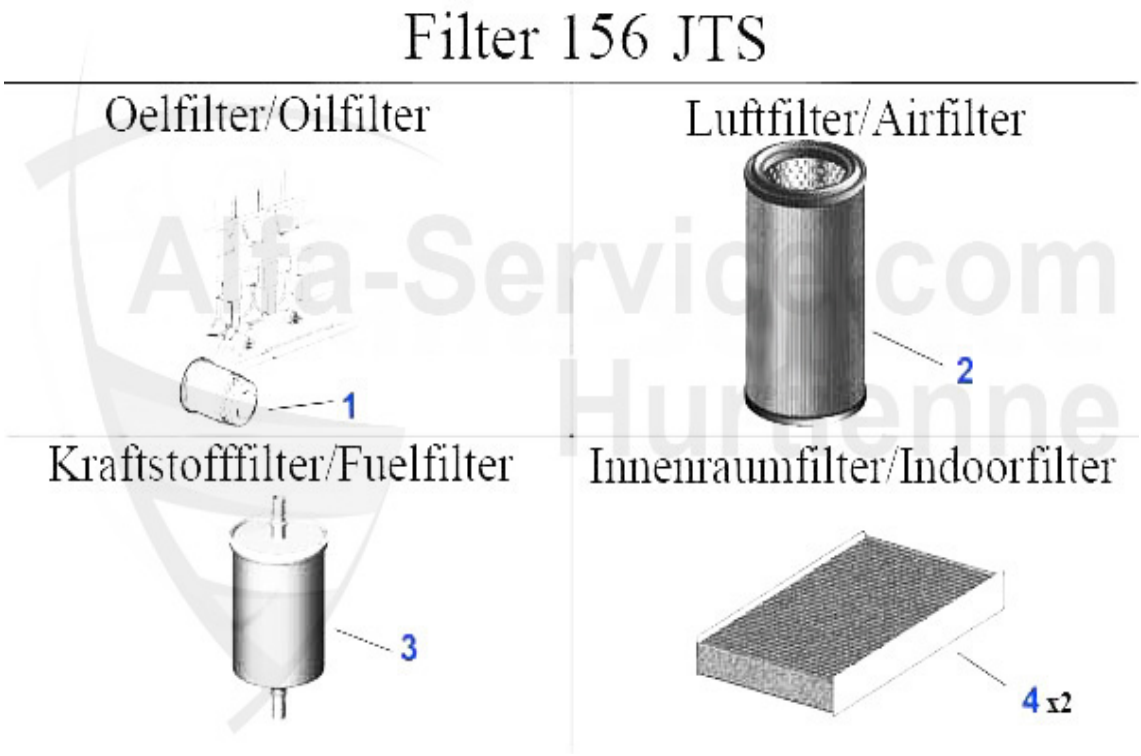

1	OF272	OILFILTER 156/NUOVO,GTV/SPIDER(916) 2.0 JTS	14.43 EUR
2	LF149	AIR FILTER 147 GTA,156 2.0 TS/JTS/V6 24V/JTD,NUOVO GT V6 24V, ROUND	14.77 EUR
3	KF75978	Kraftstofffilter 156 JTS	19.39 EUR
4	IF380	OE.46799653 pollen filter 147,156 2001>,Nuovo GT, square carbon filter	17.23 EUR

156 > FILTER > 2.5/3.2 V6 24V/GTA

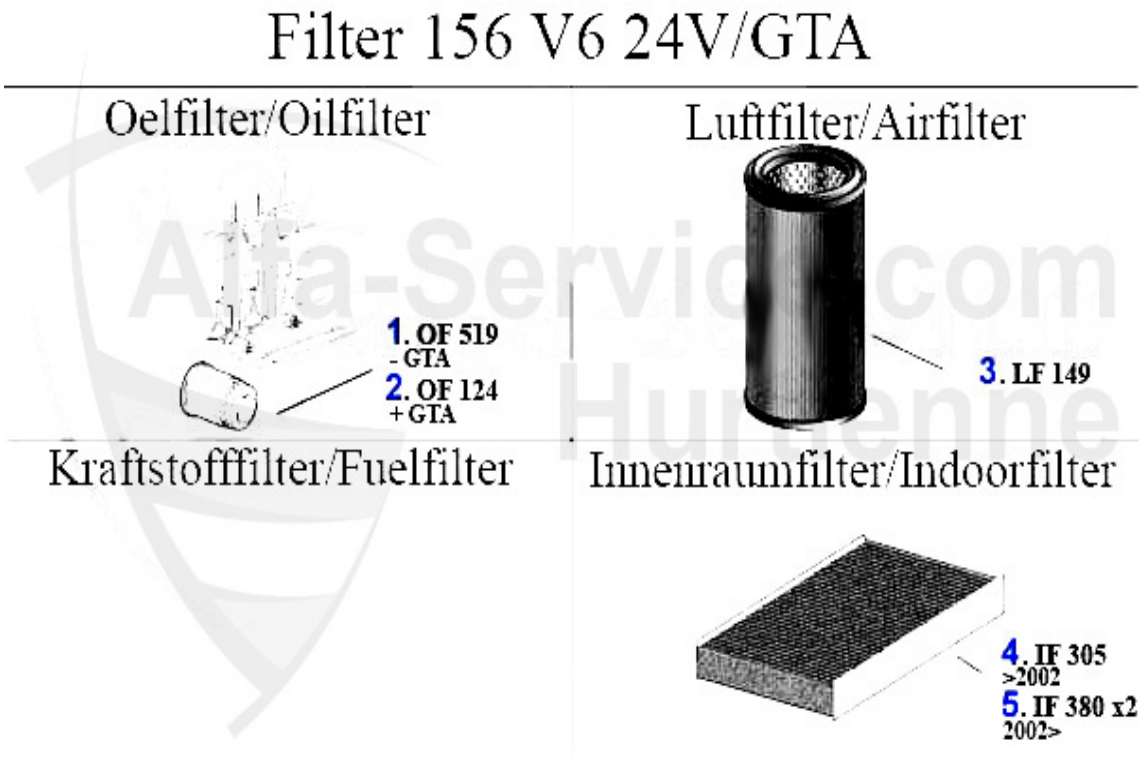

1	OF519	OE. 46808398/71736159 OILFILTER	7.79 EUR
2	OF124	OE. 46805830 OILFILTER	9.13 EUR
3	LF149	AIR FILTER 147 GTA,156 2.0 TS/JTS/V6 24V/JTD,NUOVO GT V6 24V, ROUND	14.77 EUR
4	IF305	INDOOR FILTER 156 >02, FIRM	20.00 EUR
5	IF380	OE.46799653 pollen filter 147,156 2001>,Nuovo GT, square carbon filter	17.23 EUR

156 > FILTER > 1.9 JTD

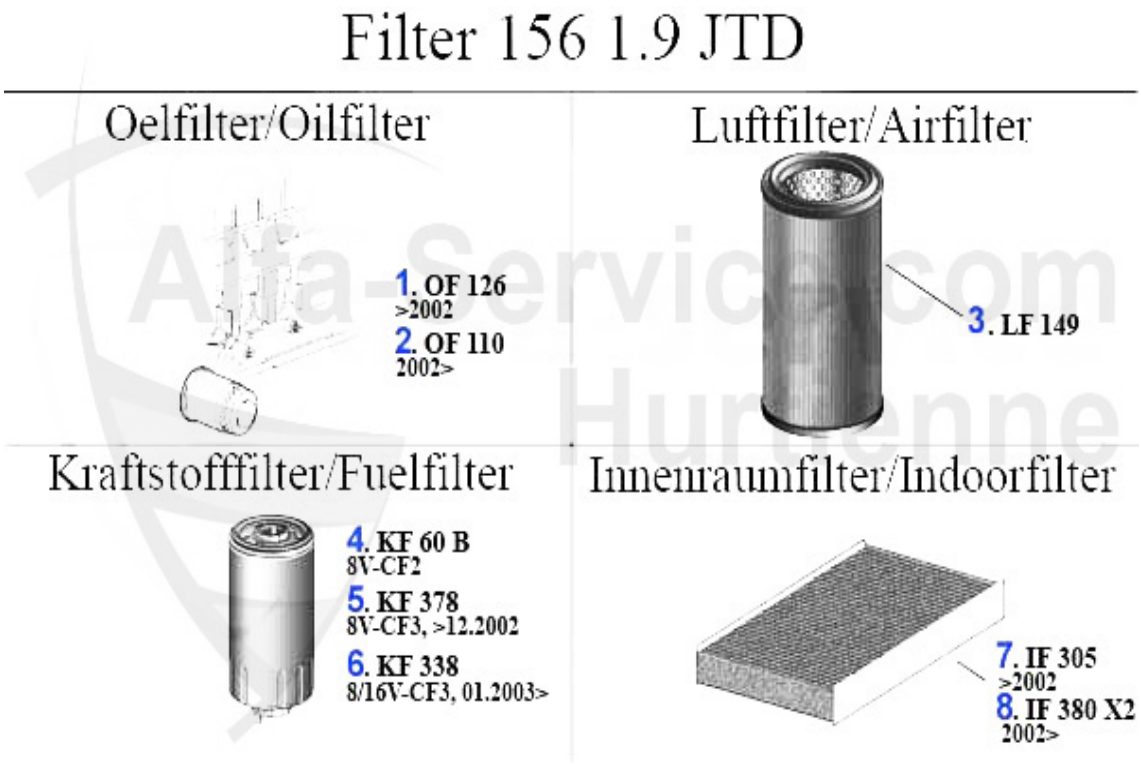

1	OF126	Ölfilter 145/6,147,156,166 JTD Anschraubpatrone	9.13 EUR
2	OF110	Ölfilfter 147,156,Nuovo GT 1.9 JTD, 166 2.4 JTD Anschraubpatrone	10.36 EUR
3	LF149	AIR FILTER 147 GTA,156 2.0 TS/JTS/V6 24V/JTD,NUOVO GT V6 24V, ROUND	14.77 EUR
4	KF60B	Kraftstoff-Filter 145/6,156,166 JTD (CF2) Bj. >01,Anschraubfilter	12.83 EUR
5	KF378	Kraftstoff-Filter 147,156,166 1.9 JTD 8V (CF3)/2.4 JTD 110 KW	32.93 EUR
6	KF338	Kraftstoffilter 147,156,166,Nuovo G T JTD (CF3),Bj 01>	28.62 EUR
7	IF305	INDOOR FILTER 156 >02, FIRM	20.00 EUR
8	IF380	OE.46799653 pollen filter 147,156 2001>,Nuovo GT, square carbon filter	17.23 EUR

156 > FILTER > 2.4 JTD

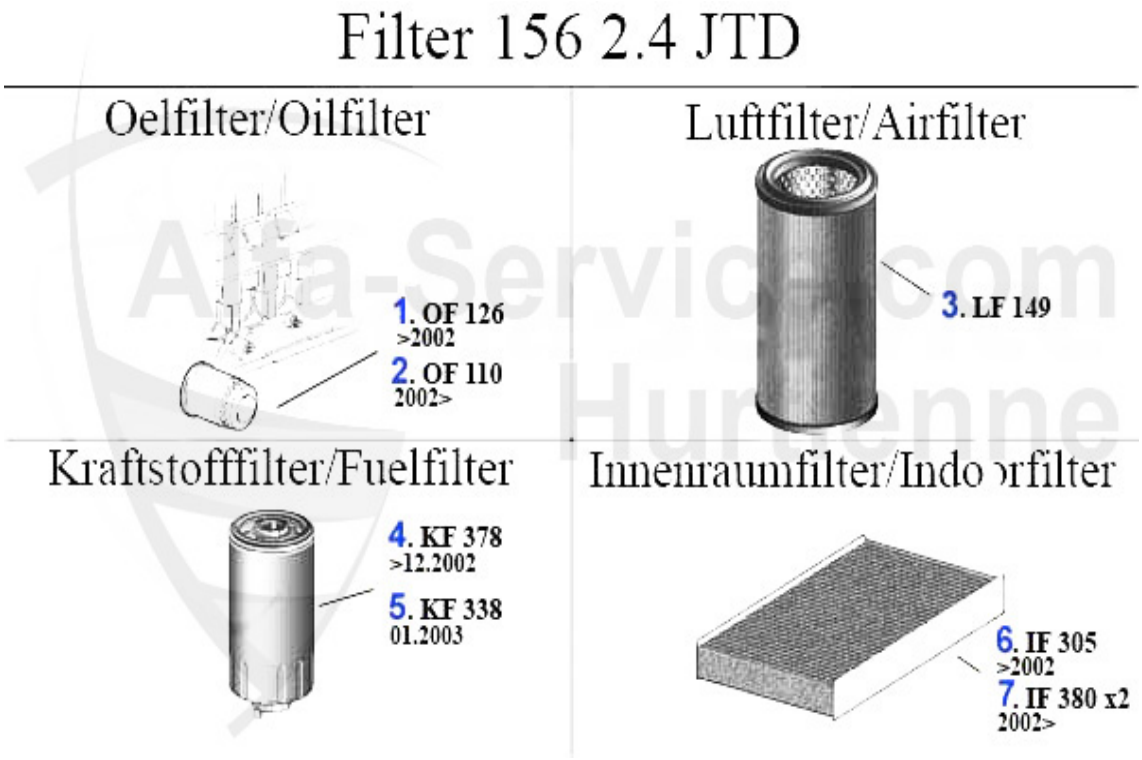

1	OF126	Ölfilter 145/6,147,156,166 JTD Anschraubpatrone	9.13 EUR
2	OF110	Ölfilfter 147,156,Nuovo GT 1.9 JTD, 166 2.4 JTD Anschraubpatrone	10.36 EUR
3	LF149	AIR FILTER 147 GTA,156 2.0 TS/JTS/V6 24V/JTD,NUOVO GT V6 24V, ROUND	14.77 EUR
4	KF378	Kraftstoff-Filter 147,156,166 1.9 JTD 8V (CF3)/2.4 JTD 110 KW	32.93 EUR
5	KF338	Kraftstoffilter 147,156,166,Nuovo G T JTD (CF3),Bj 01>	28.62 EUR
6	IF305	INDOOR FILTER 156 >02, FIRM	20.00 EUR
7	IF380	OE.46799653 pollen filter 147,156 2001>,Nuovo GT, square carbon filter	17.23 EUR

156 > EXHAUST SYSTEM > TURBO CHARGER > 1.9/2.4 JTD

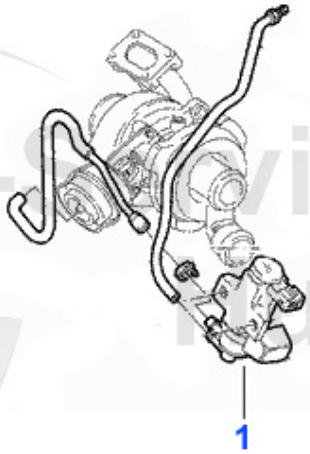

1	STV203202	ELECTRO VALVE FOR TURBO 147, 156, 159, 166,GT, Brera, Mito, Nuovo Spider	68.94 EUR

156 > EXHAUST SYSTEM > EXHAUST SYSTEM > TS 16V CF2

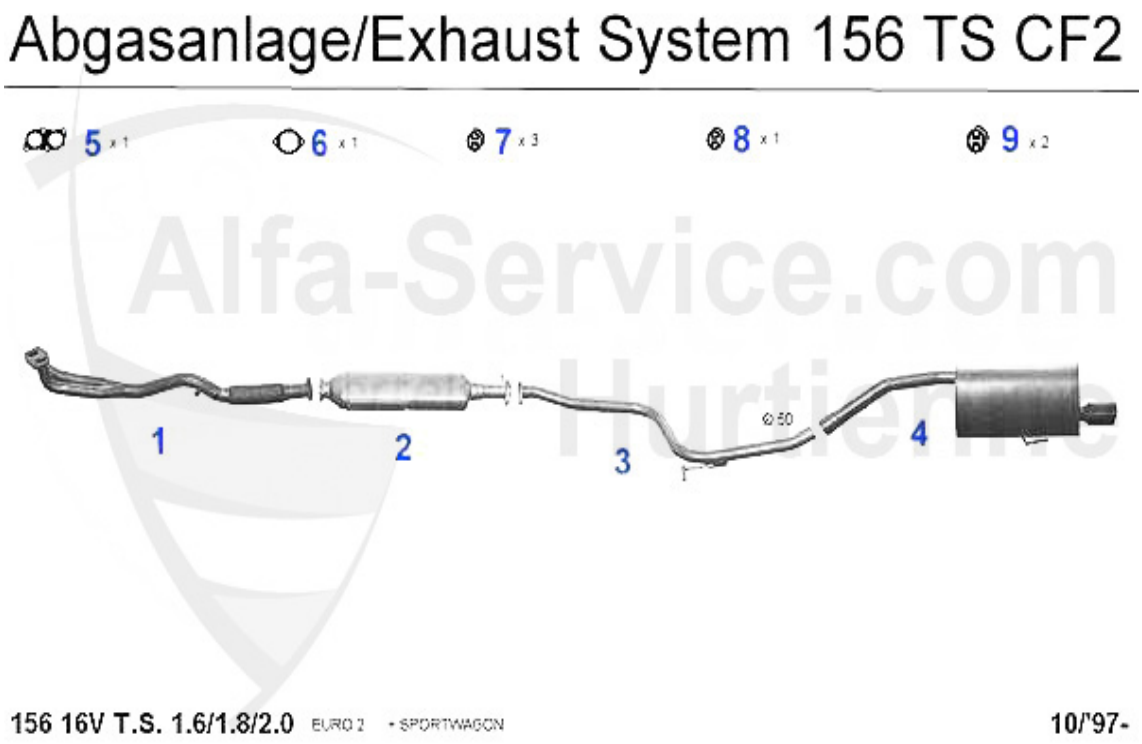

1	VSD116401	Vorschalldämpfer 156 1.6-1.8 16V TS (außer Selespeed) Bj. 97> Abgasnorm euro 2	232.05 EUR
2	KAT116433	Katalysator 156 1.6-2.0 16V TS bj. 97> (Abgasnorm euro 2)	946.05 EUR
3	MR116404	Mittelrohr 156 1.6-2.0 16V TS bj. 97> (abgasnorm euro 2)	73.07 EUR
4	NSD116407	REAR SILENCER 156 1.6-2.0 16V TS 97>	187.43 EUR
5	SAT094474	Dichtung VSD spider/gtv (916) 145/6,155,156 2.0 TS 16V	10.77 EUR
6	SAT094484	Dichtung VSD/Kat Diverse	9.75 EUR
7	SAT091143	Gummi/Auspuffaufhängung spider/gtv (916),156,166	3.53 EUR
8	SAT091066	OE.60655991 rubber exhaust hanger 147/156	4.00 EUR

156 > EXHAUST SYSTEM > EXHAUST SYSTEM > TS16V CF3

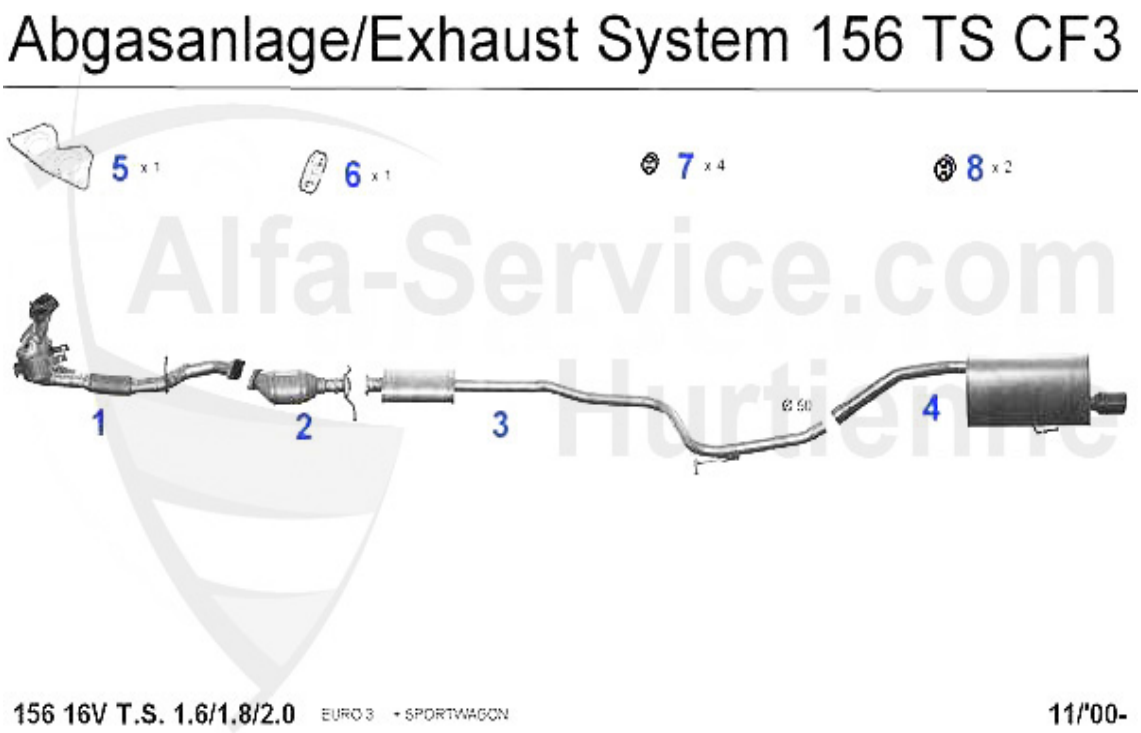

1	KAT09273	Hosenrohr mit Kat 147 1.6 TS (88KW)	750.93 EUR
1	KAT74247	OE. 60674247 EXHAUST PIPE 1st KATALYSATOR 156 1.8 TS CF3	983.50 EUR
1	KAT39668	OE. 46739668 EXHAUST PIPE/1ST KAT 147 1.6(88KW)/2.0 TS 16V	995.09 EUR
2	KAT39666	OE. 46739666 SILENCER CATALIZED/2nd KAT 147 1.6(88KW)/2.0 TS 16V	902.76 EUR
3	MSD116406	CENTER MUFFLER 156 1.6-2.0 16V TS 00> CF3,Nuovo GT 1.8 TS	193.89 EUR
4	NSD116407	REAR SILENCER 156 1.6-2.0 16V TS 97>	187.43 EUR
5	SAT094038	OE. 46803532 GASKET f. KAT 147,156,916 you need 2 rings!	9.13 EUR
6	SAT74963	Dichtung Kat 147 1.6 TS (88KW),156/ SW,gtv/spider (916) TS	11.19 EUR
7	SAT091143	Gummi/Auspuffaufhängung spider/gtv (916),156,166	3.53 EUR
8	SAT091066	OE.60655991 rubber exhaust hanger 147/156	4.00 EUR

Abgasanlage/Exhaust System 156 2.0 JTS

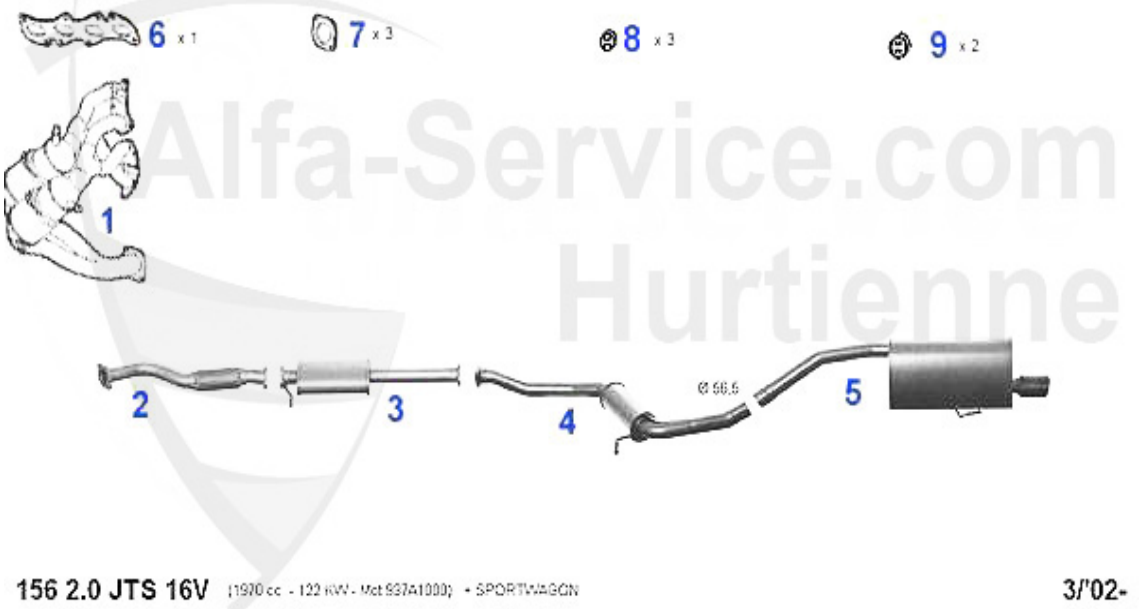

1	KAT80214	OE. 55180214 EXHAUST PIPE/KATALYSATOR 156/SW JTS	1465.00 EUR
2	VR116545	FRONT MUFFLER 156/GTV/SPIDER (916)/NUOVO GT 2.0 JTS	184.65 EUR
3	KAT116503	CENTER CATALYST 156/NUOVO GT 2.0 JTS	719.13 EUR
4	MSD116506	Mitteltopf 156 2.0 JTS 16V bj. 02> 156 2.5 V6 bj. 97>/Nuovo GT 2.0 JTS	225.70 EUR
5	NSD116507	REAR SILENCER 156 2.5 V6 24V 97- 156 2.0 JTS 16V 02>	230.82 EUR
6	AGKD02761	Dichtung Abgaskrümmer 145/6,147,155 ,156,166,gtv/spider (916) TS/JTS 16 V Bj. 98>	19.90 EUR
7	SAT094484	Dichtung VSD/Kat Diverse	9.75 EUR
8	SAT091143	Gummi/Auspuffaufhängung spider/gtv (916),156,166	3.53 EUR
9	SAT091066	OE.60655991 rubber exhaust hanger 147/156	4.00 EUR

156 > EXHAUST SYSTEM > EXHAUST SYSTEM > 2.5 V6 24V >2002

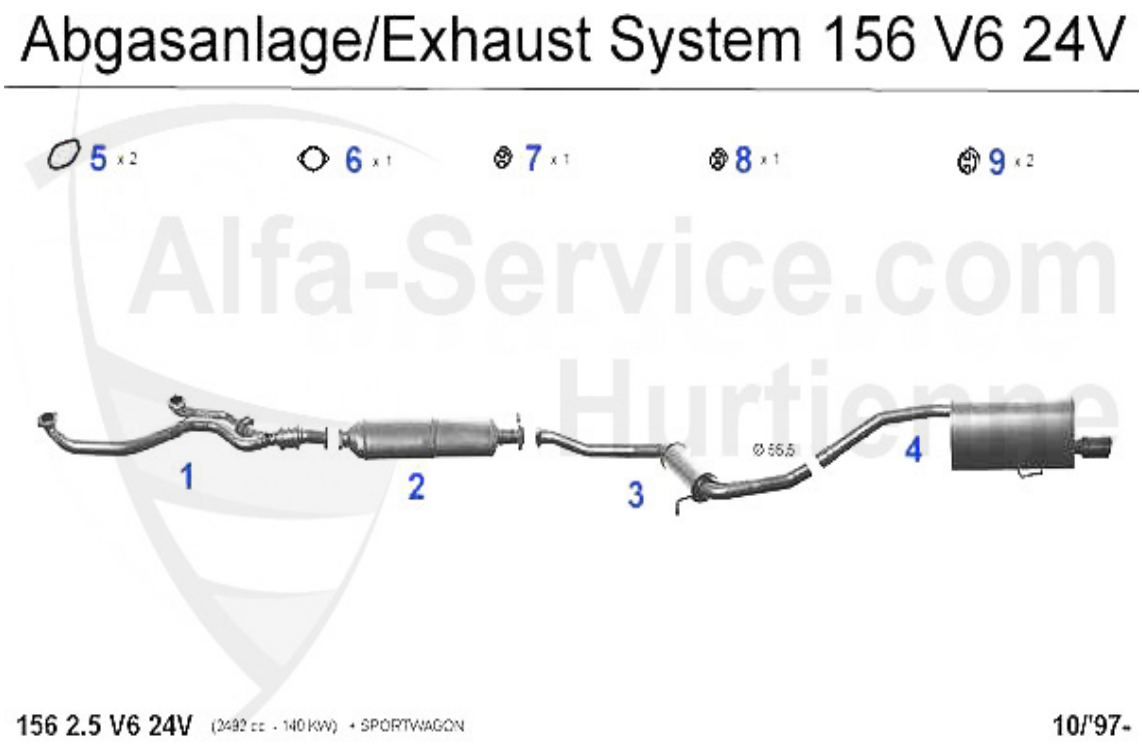

1	VR52860	FRONT MUFFLER 156/SW 2.5 V6 24V (manual transmission)	430.05 EUR
1	VR58227	OE. 60658227 EXHAUST PIPE 156/SW 2.5 V6 24V AUTOMATIC TRANSMISSION	435.99 EUR
2	KAT116533	CATALYST 156 2.5 V6 97>	816.59 EUR
3	MSD116506	Mitteltopf 156 2.0 JTS 16V bj. 02> 156 2.5 V6 bj. 97>/Nuovo GT 2.0 JTS	225.70 EUR
4	NSD116507	REAR SILENCER 156 2.5 V6 24V 97- 156 2.0 JTS 16V 02>	230.82 EUR
5	SAT54239	Dichtung/Hosenrohr 156,164 Super, 166,gtv/spider (916) V6 24V	9.73 EUR
6	SAT094484	Dichtung VSD/Kat Diverse	9.75 EUR
7	SAT091143	Gummi/Auspuffaufhängung spider/gtv (916),156,166	3.53 EUR
9	SAT091066	OE.60655991 rubber exhaust hanger 147/156	4.00 EUR

156 > EXHAUST SYSTEM > EXHAUST SYSTEM > 2.5/3.2 V6 24V/GTA 2002>

Abgasanlage/Exhaust System 156 2.5 V6 24V/GTA Bj. 02>

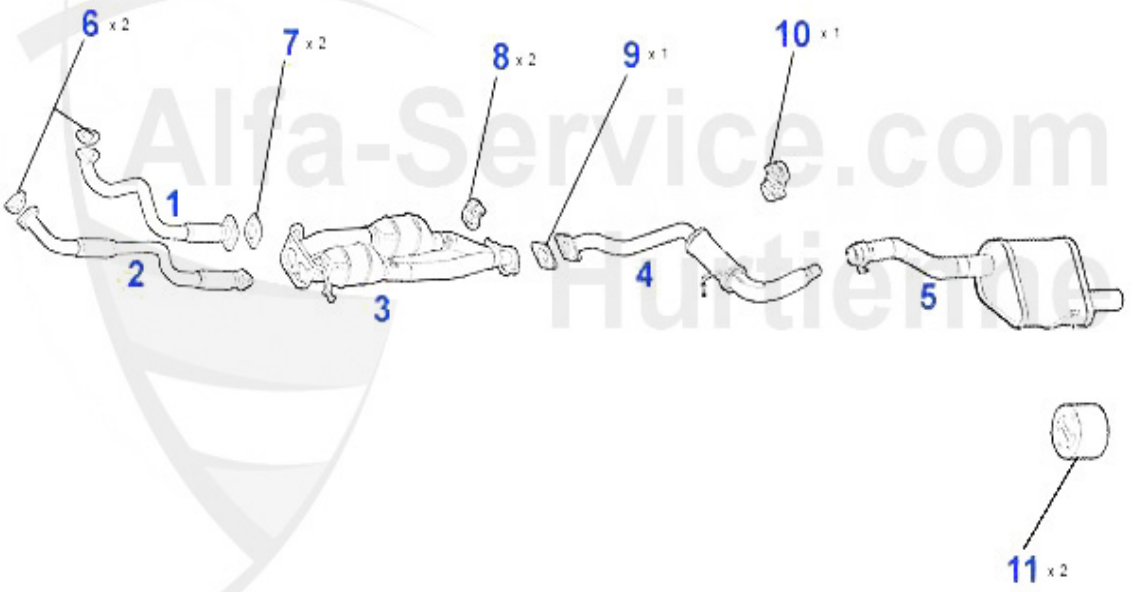

1	VR69658	OE. 60669658 EXHAUST PIPE FR 147 GTA	265.70 EUR
2	VR69659	OE. 60669659 EXHAUST PIPE FL 147 GTA	327.25 EUR
3	KAT76395	OE. 60676395 SILENCER CATALIZED 156/SW GTA	1200.26 EUR
3	KAT70266	OE. 60670266 SILENCER CATALIZED 156/SW 2.5 V6 24V 2002>	1282.33 EUR
4	MSD116506	Mitteltopf 156 2.0 JTS 16V bj. 02> 156 2.5 V6 bj. 97>/Nuovo GT 2.0 JTS	225.70 EUR
4	MSD76396	OE. 60676396 MIDDLE SILENCER 156/SW GTA	327.25 EUR
5	NSD116507	REAR SILENCER 156 2.5 V6 24V 97- 156 2.0 JTS 16V 02>	230.82 EUR
5	NSD76397	OE. 60676397 REAR SILENCER 156/SW GTA	389.00 EUR
6	SAT69665	OE. 60669665 SEALING GASKET f. EXHAUST PIPE 147,156,166,Nuovo GT V6 24V/GTA	7.18 EUR
7	SAT094484	Dichtung VSD/Kat Diverse	9.75 EUR
8	SAT091143	Gummi/Auspuffaufhängung spider/gtv (916),156,166	3.53 EUR
10	SAT091066	OE.60655991 rubber exhaust hanger 147/156	4.00 EUR

Abgasanlage/Exhaust System 156 1.9 JTD 8V

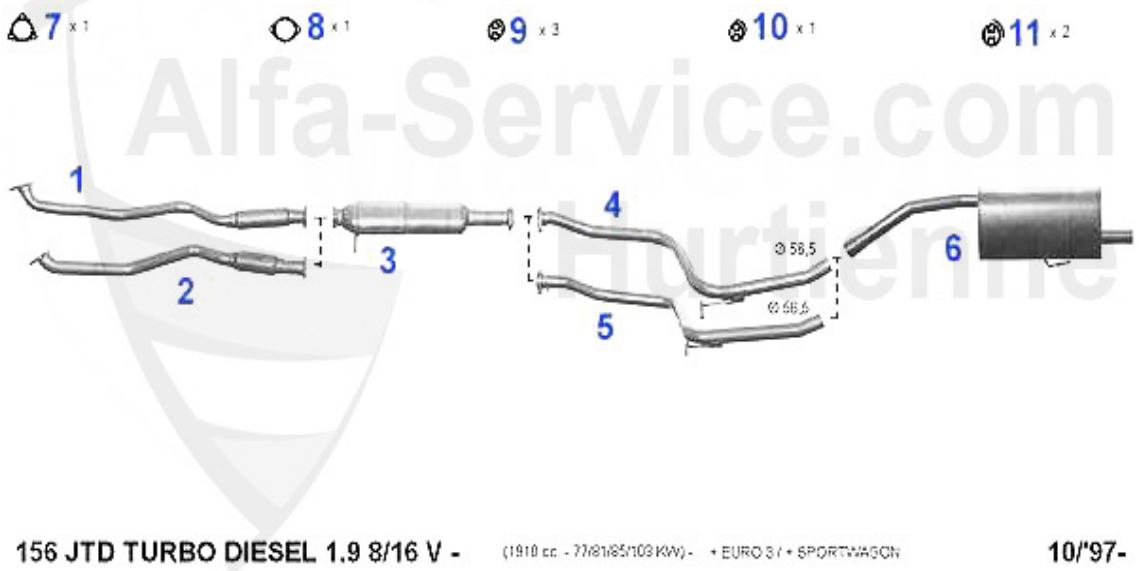

Alfa-Service.com Hurtienne

1	VSD116601	Vorschalldämpfer 156 1.9 JTD bj. 97> bis # 0434143	222.51 EUR
2	VSD116631	Vorschalldämpfer 147 1.9 JTD bj. 10.00> 156 1.9 JTD bj. 97> ab # 0434143	219.02 EUR
3	KAT116633	CENTER CATALYST 147 1.9 JTD,156 1.9 & 2.4 JTD 97>	692.97 EUR
4	MR116604	Mittelrohr 156 1.9 & 2.4 JTD 1.9 JTD bis # 0434143	101.15 EUR
5	MR116634	Mittelrohr 156 1.9 JTD ab # 0434143 Nuovo GT 1.9 JTD CF3/4	108.33 EUR
6	NSD116607	REAR SILENCER 156 1.9 & 2.4 JTD 97>	193.38 EUR
7	SAT094560	GASKET FRONT MUFFLER 145/6,156,166 JTD	4.62 EUR
8	SAT094484	Dichtung VSD/Kat Diverse	9.75 EUR
9	SAT091143	Gummi/Auspuffaufhängung spider/gtv (916),156,166	3.53 EUR
10	SAT091066	OE.60655991 rubber exhaust hanger 147/156	4.00 EUR

Abgasanlage/Exhaust System 156 1.9 JTD 16V

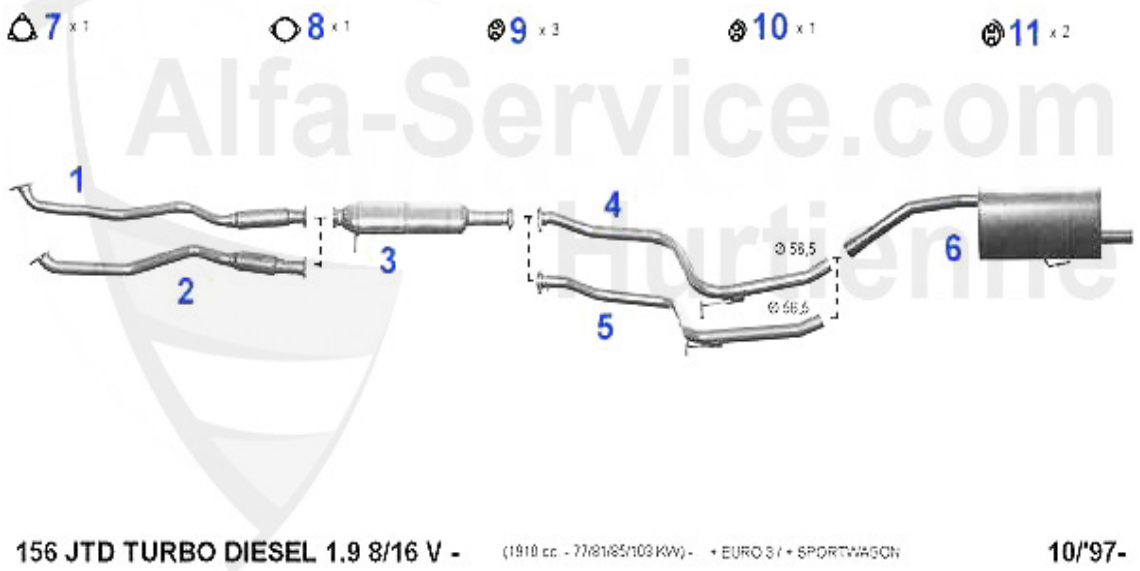

1	VSD116601	Vorschalldämpfer 156 1.9 JTD bj. 97> bis # 0434143	222.51 EUR
2	VSD116631	Vorschalldämpfer 147 1.9 JTD bj. 10.00> 156 1.9 JTD bj. 97> ab # 0434143	219.02 EUR
3	KAT116633	CENTER CATALYST 147 1.9 JTD,156 1.9 & 2.4 JTD 97>	692.97 EUR
4	MR116604	Mittelrohr 156 1.9 & 2.4 JTD 1.9 JTD bis # 0434143	101.15 EUR
5	MR116634	Mittelrohr 156 1.9 JTD ab # 0434143 Nuovo GT 1.9 JTD CF3/4	108.33 EUR
6	NSD116607	REAR SILENCER 156 1.9 & 2.4 JTD 97>	193.38 EUR
7	SAT094560	GASKET FRONT MUFFLER 145/6,156,166 JTD	4.62 EUR
8	SAT094484	Dichtung VSD/Kat Diverse	9.75 EUR
9	SAT091143	Gummi/Auspuffaufhängung spider/gtv (916),156,166	3.53 EUR
10	SAT091066	OE.60655991 rubber exhaust hanger 147/156	4.00 EUR

156 > EXHAUST SYSTEM > EXHAUST SYSTEM > 2.4 JTD 10V

Abgasanlage/Exhaust System 156 2.4 JTD 10V

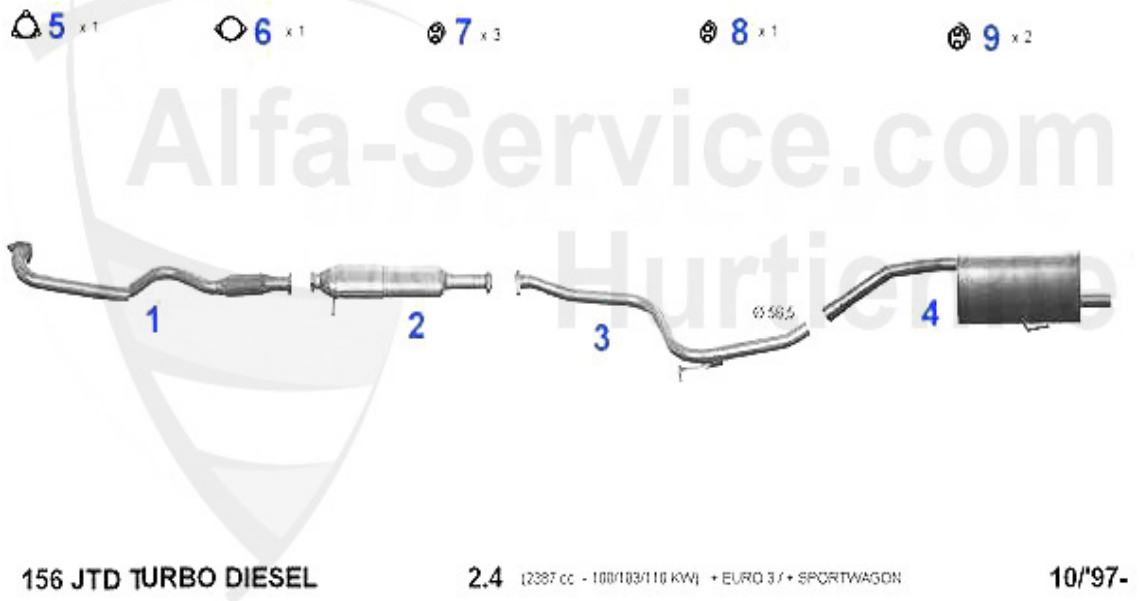

1	VSD116621 Vorschalldämpfer 156 2.4 JTD bj. 97>	214.40 EUR
2	KAT116633 CENTER CATALYST 147 1.9 JTD,156 1.9 & 2.4 JTD 97>	692.97 EUR
3	MR116604 Mittelrohr 156 1.9 & 2.4 JTD 1.9 JTD bis # 0434143	101.15 EUR
4	NSD116607 REAR SILENCER 156 1.9 & 2.4 JTD 97>	193.38 EUR
5	SAT094560 GASKET FRONT MUFFLER 145/6,156,166 JTD	4.62 EUR
6	SAT094484 Dichtung VSD/Kat Diverse	9.75 EUR
7	SAT091143 Gummi/Auspuffaufhängung spider/gtv (916),156,166	3.53 EUR
8	SAT091066 OE.60655991 rubber exhaust hanger 147/156	4.00 EUR

156 > EXHAUST SYSTEM > EXHAUST SYSTEM > 2.4 JTD 20V

Abgasanlage/Exhaust System 156 2.4 JTD 20V

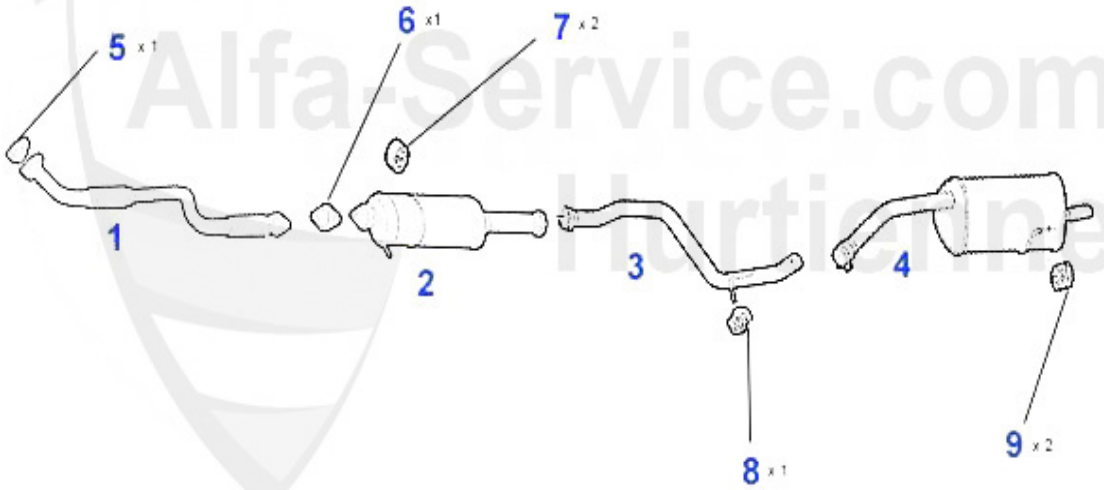

1	VR90242	OE. 55190242 EXHAUST PIPE 156/SW 2.4 JTD 20V	333.40 EUR
2	KAT85208	OE. 55185208 SILENCER CATALIZED 156/SW 2.4 JTD 20V	866.86 EUR
3	MR116604	Mittelrohr 156 1.9 & 2.4 JTD 1.9 JTD bis # 0434143	101.15 EUR
4	NSD85211	OE. 55185211 REAR SILENCER 156/SW 2.4 JTD 20V	282.11 EUR
5	SAT094560	GASKET FRONT MUFFLER 145/6,156,166 JTD	4.62 EUR
6	SAT094484	Dichtung VSD/Kat Diverse	9.75 EUR
7	SAT091143	Gummi/Auspuffaufhängung spider/gtv (916),156,166	3.53 EUR
8	SAT091066	OE.60655991 rubber exhaust hanger 147/156	4.00 EUR

156 > EXHAUST SYSTEM > SPORT EXHAUST SYSTEM > TS16V CF2

Sportauspuff/Sport Exhaust System 156 TS CF2

156 16V T.S. 1.6/1.8/2.0 + EURO 3 + SPORTWAGON 10/'97-

1	SNSD1164	Sport-Endtopf 156 1.6/1.8/2.0 16VTS Endrohr verchromt oval 120x76 mm	***
2	SAT091066	OE.60655991 rubber exhaust hanger 147/156	4.00 EUR

156 > EXHAUST SYSTEM > SPORT EXHAUST SYSTEM > TS16V CF3

Sportauspuff/Sport Exhaust System 156 TS CF3

1	SNSD1164	Sport-Endtopf 156 1.6/1.8/2.0 16VTS Endrohr verchromt oval 120x76 mm	***
2	SAT091066	OE.60655991 rubber exhaust hanger 147/156	4.00 EUR

Sportauspuff/Sport Exhaust System 156 2.0 JTS

156 2.0 JTS 16V - 2.5 V6 24V - JTD TURBO DIESEL 1.9/2.4 10/'97-

1	SNSD1165	Sport-Endtopf 156 JTS/JTD/V6 24V Endrohr oval verchromt 120x76 mm	255.45 EUR
2	SAT091066	OE.60655991 rubber exhaust hanger 147/156	4.00 EUR

Sportauspuff/Sport Exhaust System 156 2.5 V6 24V

156 2.0 JTS 16V - 2.5 V6 24V - JTD TURBO DIESEL 1.9/2.4 10/'97-

1	SNSD1165	Sport-Endtopf 156 JTS/JTD/V6 24V Endrohr oval verchromt 120x76 mm	255.45 EUR
2	SAT091066	OE.60655991 rubber exhaust hanger 147/156	4.00 EUR

Sportauspuff/Sport Exhaust System 156 1.9 JTD 8V

156 2.0 JTS 16V - 2.5 V6 24V - JTD TURBO DIESEL 1.9/2.4 10/'97-

1	SNSD1165	Sport-Endtopf 156 JTS/JTD/V6 24V Endrohr oval verchromt 120x76 mm	255.45 EUR
2	SAT091066	OE.60655991 rubber exhaust hanger 147/156	4.00 EUR

Sportauspuff/Sport Exhaust System 156 1.9 JTD 16V

156 2.0 JTS 16V - 2.5 V6 24V - JTD TURBO DIESEL 1.9/2.4 10/'97-

1	SNSD1165	Sport-Endtopf 156 JTS/JTD/V6 24V Endrohr oval verchromt 120x76 mm	255.45 EUR
2	SAT091066	OE.60655991 rubber exhaust hanger 147/156	4.00 EUR

156 > EXHAUST SYSTEM > SPORT EXHAUST SYSTEM > 2.4 JTD 10V

Sportauspuff/Sport Exhaust System 156 2.4 JTD 10V

156 2.0 JTS 16V - 2.5 V6 24V - JTD TURBO DIESEL 1.9/2.4 10/'97-

1	SNSD1165	Sport-Endtopf 156 JTS/JTD/V6 24V Endrohr oval verchromt 120x76 mm	255.45 EUR
2	SAT091066	OE.60655991 rubber exhaust hanger 147/156	4.00 EUR

Lambda-Sonde/Lambda Probe 156 TS CF2

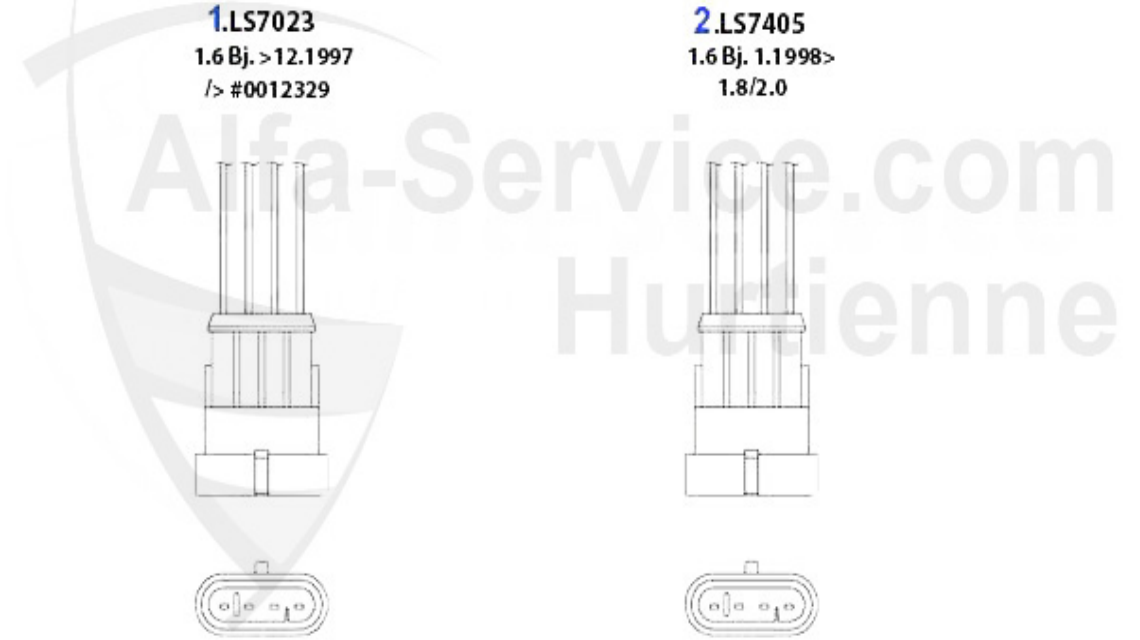

Alfa-Service.com Hurlienne

1	LS7023	Lambda-Sonde 145/6 2.0 16V TS bj. 11.96>,156 1.6 16V TS >#0023373, 164 Super 2.0 TS/3.0 V6/24V bj. 10.96>,Spider/gtv (916) 2.0 TS/3.0 V6/24V	78.99 EUR
2	LS7405	LAMBDA PROBE 145/6 1.4/1.6/1.8/16V TS/2.0 QV,156 1.6 16V TS #0023373> 156 1.8/2.0/16V TS/2.5 V6 24V,166 6-CYL.,SPIDER/GTV (916) 1.8/ FOUR-CORE CABLE	79.00 EUR

Lambda-Sonde/Lambda Probe 156 TS CF3

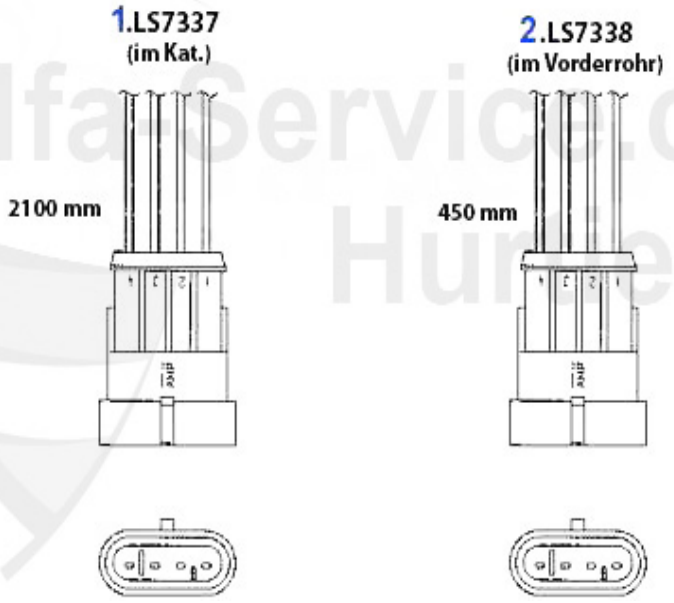

1	LS7337	OE. 46760863 LAMBDA PROBE 147,156 1.6 (88KW)/1.8 (103KW)/2.0 (110KW)	59.00 EUR
2	LS7338	Lambda-Sonde 147 1.6/2.0 16V TS, 156 1.6/1.8/2.0 16V TS/2.5 V6 24V, 3.2 GTA,166 2.0 16V TS,gtv/spider (916) 2.0 TS bj. 08.00> 4-adrig	112.85 EUR

156 > EXHAUST SYSTEM > LAMBDA PROBE > 2.0 JTS

Lambda-Sonde/Lambda Probe 156 2.0 JTS

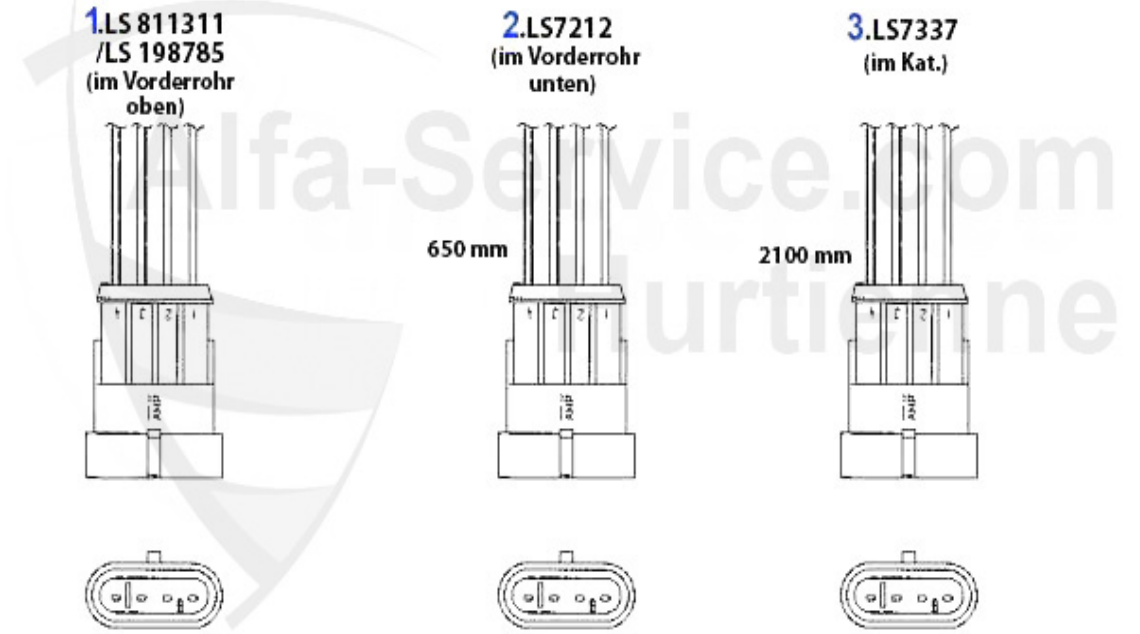

1	LS198785	OE. 55198785 LAMBDA PROBE 156 2.0 JTS FRONT PIPE TOP	112.85 EUR
1	LS811311	OE. 46811311 LAMBDA PROBE 156, 166, gtv/spider (916), Nuovo GT 2.0 TS CF3/ JTS >05.2005	149.01 EUR
2	LS7212	Lambda-Sonde 147 1.6 16V TS,156 2.0 JTS/2.5 V,166 2.0 TS,gtv/spider (916) 3.0 V6 24V,4-adrig	66.00 EUR
3	LS7337	OE. 46760863 LAMBDA PROBE 147,156 1.6 (88KW)/1.8 (103KW)/2.0 (110KW)	59.00 EUR

156 > EXHAUST SYSTEM > LAMBDA PROBE > 2.5 V6 24V CF2 >2002

Lambda-Sonde/Lambda Probe 156 2.5 V6 24V Bj. >02

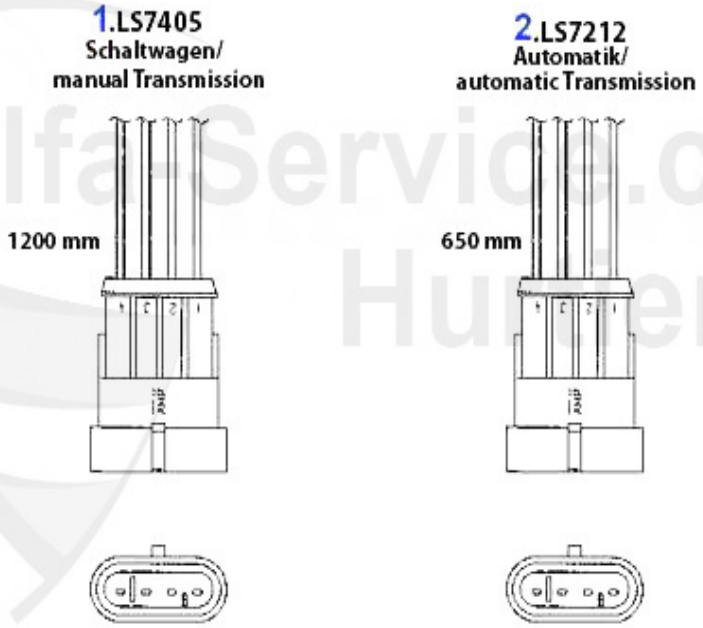

1	LS7405	LAMBDA PROBE 145/6 1.4/1.6/1.8/16V TS/2.0 QV,156 1.6 16V TS #0023373> 156 1.8/2.0/16V TS/2.5 V6 24V,166 6-CYL.,SPIDER/GTV (916) 1.8/ FOUR-CORE CABLE	79.00 EUR
2	LS7212	Lambda-Sonde 147 1.6 16V TS,156 2.0 JTS/2.5 V,166 2.0 TS,gtv/spider (916) 3.0 V6 24V,4-adrig	66.00 EUR

156 > EXHAUST SYSTEM > LAMBDA PROBE > 2.5/3.2 V6 24V/GTA 2002>

Lambda-Sonde/Lambda Probe 156 2.5 V6 24V/GTA CF3 Bj. 02>

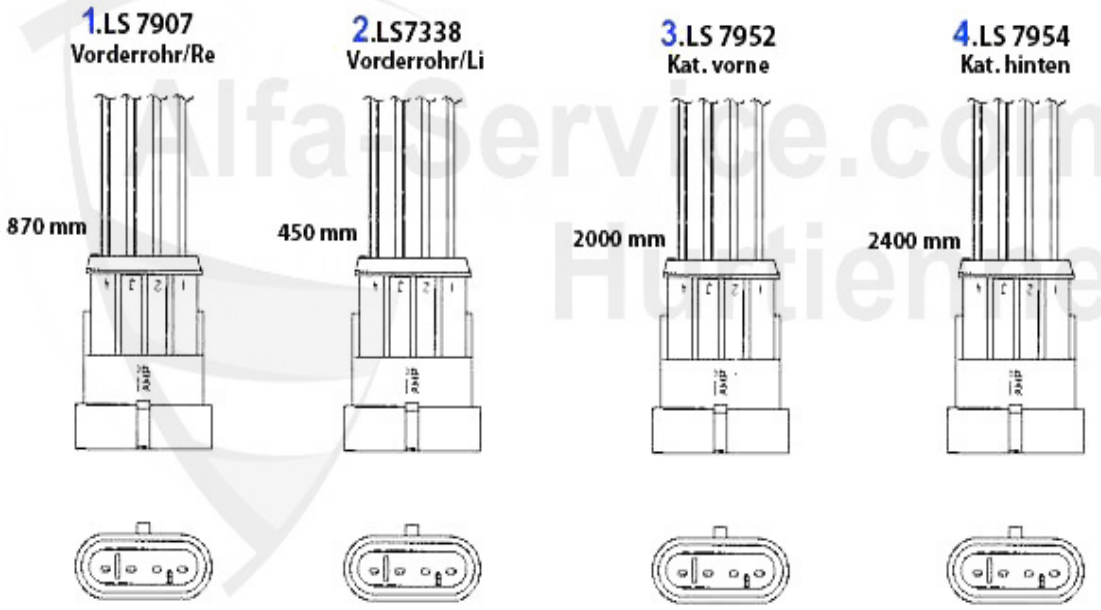

1	LS7907	Lambda-Sonde 147 GTA,156 2.5 V6 24V bj. 10.00>/3.2 GTA,gtv/spider (916) 3.2 V6 24V,GT Nuovo 3.2 V6 24V 4-adrig	108.00 EUR
2	LS7338	Lambda-Sonde 147 1.6/2.0 16V TS, 156 1.6/1.8/2.0 16V TS/2.5 V6 24V, 3.2 GTA,166 2.0 16V TS,gtv/spider (916) 2.0 TS bj. 08.00> 4-adrig	112.85 EUR
3	LS7952	Lambda-Sonde 147 GTA,156 2.5 V6 24V bj. 01.02>/3.2 GTA,GT Nuovo 3.2 V6 24V,gtv/spider 3.2 V6 24V,4-adrig	99.00 EUR
4	LS7954	Lambda-Sonde 147 GTA,156 2.5 V6 24V bj. 01.02>/ 3.2 GTA bj.03.02>,166 3.2 V6 24V, gtv/spider (916) 3.2 V6 24V, GT Nuovo 3.2 V6 24V,4-adrig	69.00 EUR

156 > INTERIOR > CAR MAT

1	FMS 156 GTA	Fußmatten 156 GTA schwarz/rotes Emblem,Tuftvelour,gekettelt Rücken beschichtung: Latex-Feinprägung	61.04 EUR
1	FMS 156	FLOOR MAT SET 156 BLACK VELOUR WITH RED EMBLEM	61.04 EUR

156 > AIR CONDITIONER > 2001 - 2008 1,9JTD

1	KS76438	PRESSURE SWITCH AIRCONDITIONING SYSTEM	45.99 EUR

Antriebswelle/Driveshaft 156 1.6/1.8 TS

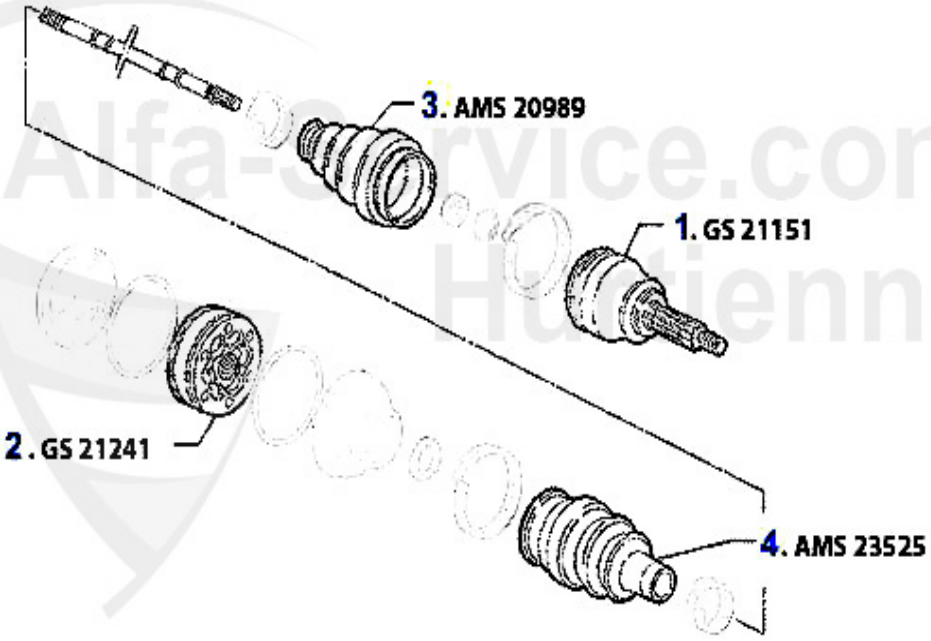

1	GS21151	Gelenksatz außen 156 1.8/1.8/2.0 16V TS,gtv (916) 1.8/2.0 TS/JTS Bj. 98>,Nuovo GT	119.00 EUR
2	GS21241	Inner drive shaft joint gtv/spider (916),155,145/6 TS 16V,156 TS 16V 166 2.0 TS,147 1.6/2.0 TS	111.72 EUR
3	AMS20989	OE.46429633, outer joint gaiter 145/6 147, 156, 166	17.90 EUR
4	AMS23525	Achsmanschettensatz innen 155 1,7/ 1.8/2.0/TS 16V,2.5 V6,1.9TD 164/Super 2.0 TS,145/6 TS 16V	25.55 EUR

Antriebswelle/Driveshaft 156 2.0 TS

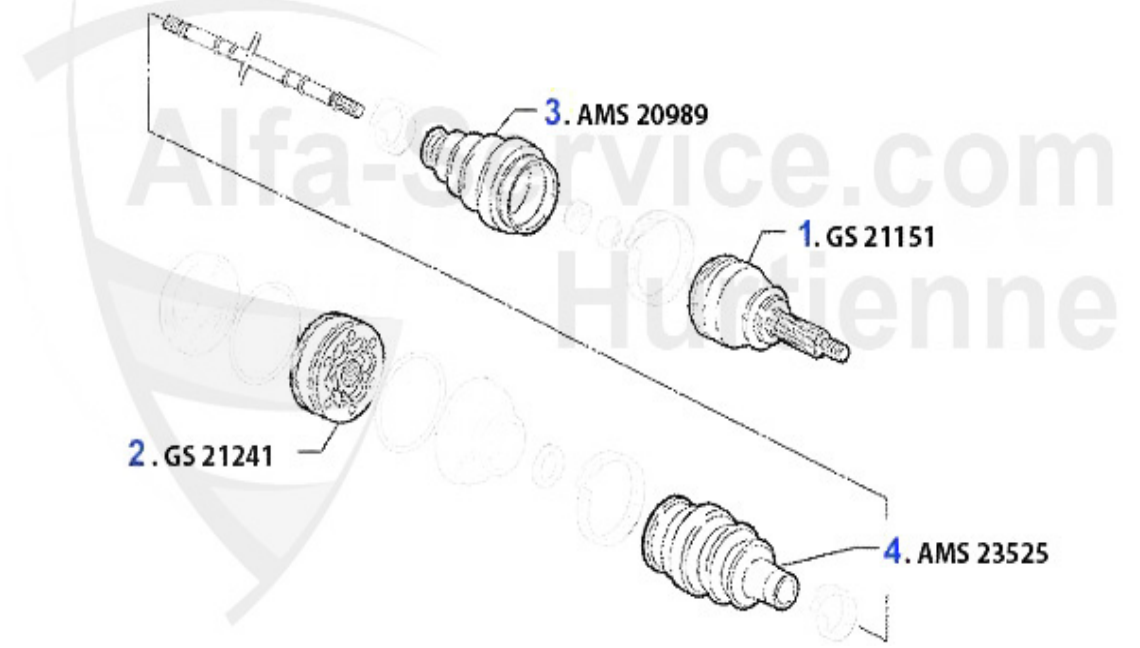

1	GS21151	Gelenksatz außen 156 1.8/1.8/2.0 16V TS,gtv (916) 1.8/2.0 TS/JTS Bj. 98>,Nuovo GT	119.00 EUR
2	GS21241	Inner drive shaft joint gtv/spider (916),155,145/6 TS 16V,156 TS 16V 166 2.0 TS,147 1.6/2.0 TS	111.72 EUR
3	AMS20989	OE.46429633, outer joint gaiter 145/6 147, 156, 166	17.90 EUR
4	AMS23525	Achsmanschettensatz innen 155 1,7/ 1.8/2.0/TS 16V,2.5 V6,1.9TD 164/Super 2.0 TS,145/6 TS 16V	25.55 EUR

Antriebswelle/Driveshaft 156 2.0 JTS

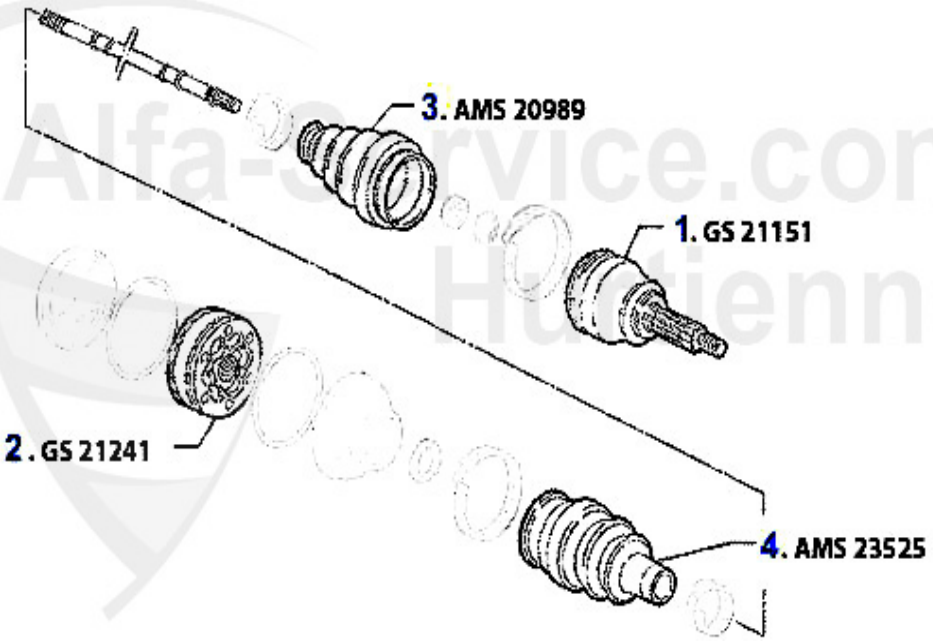

1	GS21151	Gelenksatz außen 156 1.8/1.8/2.0 16V TS,gtv (916) 1.8/2.0 TS/JTS Bj. 98>,Nuovo GT	119.00 EUR
2	GS21241	Inner drive shaft joint gtv/spider (916),155,145/6 TS 16V,156 TS 16V 166 2.0 TS,147 1.6/2.0 TS	111.72 EUR
3	AMS20989	OE.46429633, outer joint gaiter 145/6 147, 156, 166	17.90 EUR
4	AMS23525	Achsmanschettensatz innen 155 1,7/ 1.8/2.0/TS 16V,2.5 V6,1.9TD 164/Super 2.0 TS,145/6 TS 16V	25.55 EUR

Antriebswelle/Driveshaft 156 2.5 V6 24V

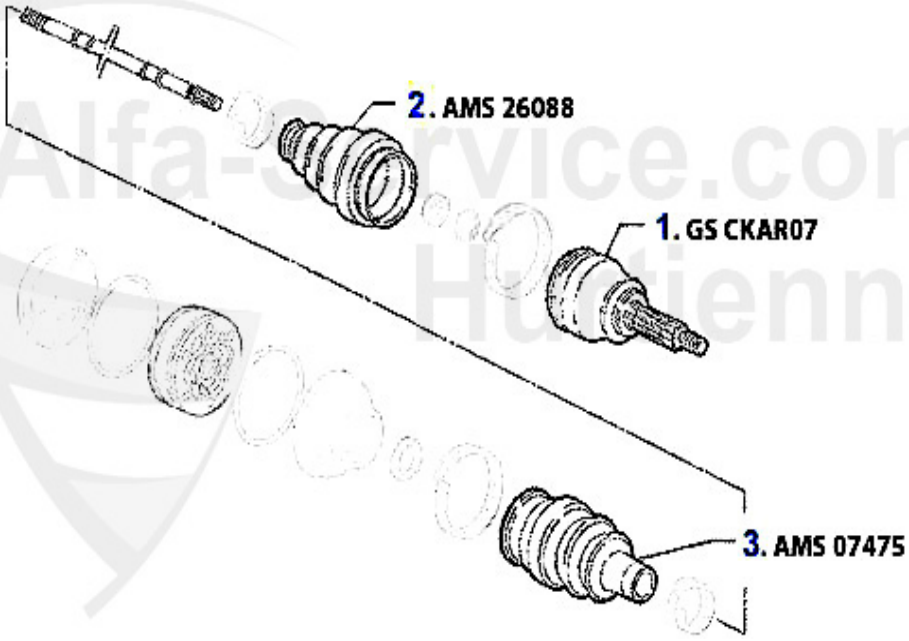

1	GSCKAR07	Gelenksatz außen 145/6 1.9 JTD (77kw) mit/ohne ABS,155,gtv/spider (916) V6 # 6063041>	125.66 EUR
2	AMS26088	OE. 60556609 Boot Set Wheel Side	24.89 EUR
3	AMS07475	OE. 46307375 BOOT SET 147 1.9 JTD 16V 156/SW V6 24V	22.47 EUR

Antriebswelle/Driveshaft 156 3.2 V6 24V/GTA

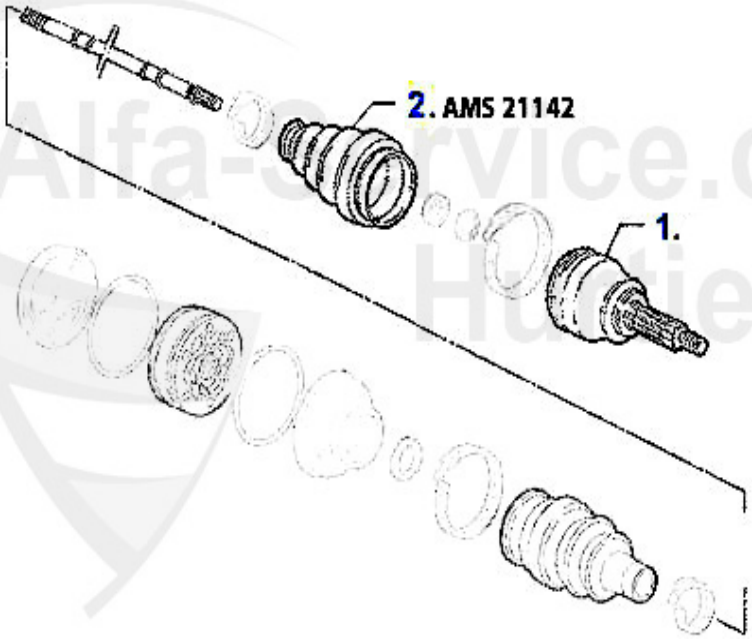

Alfa-service.com Hudienne

1	GS07922	OE. 46307922 CONST.VELOCITY JOI 147,156, Nuovo GT 3.2 V6 24V/GTA	254.51 EUR
2	AMS21142	OE. 46307733 BOOT SET 147,156,gtv/spider (916),Nuovo GT 3.2 V6 24V/GTA	20.42 EUR

Antriebswelle/Driveshaft 156 1.9 JTD 8V

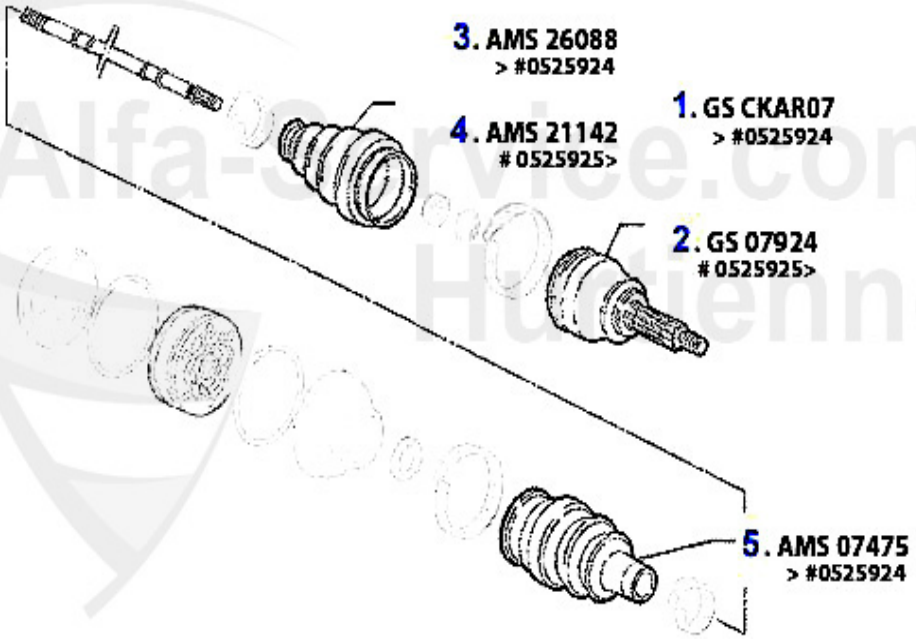

2	GS07924	OE. 46307924 CONST.VELOCITY JOI 156 1.9 JTD 8V (85KW)	142.60 EUR
3	AMS26088	OE. 60556609 Boot Set Wheel Side	24.89 EUR
4	AMS21142	OE. 46307733 BOOT SET 147,156,gtv/spider (916),Nuovo GT 3.2 V6 24V/GTA	20.42 EUR
5	AMS07475	OE. 46307375 BOOT SET 147 1.9 JTD 16V 156/SW V6 24V	22.47 EUR

Antriebswelle/Driveshaft 156 1.9 JTD 16V

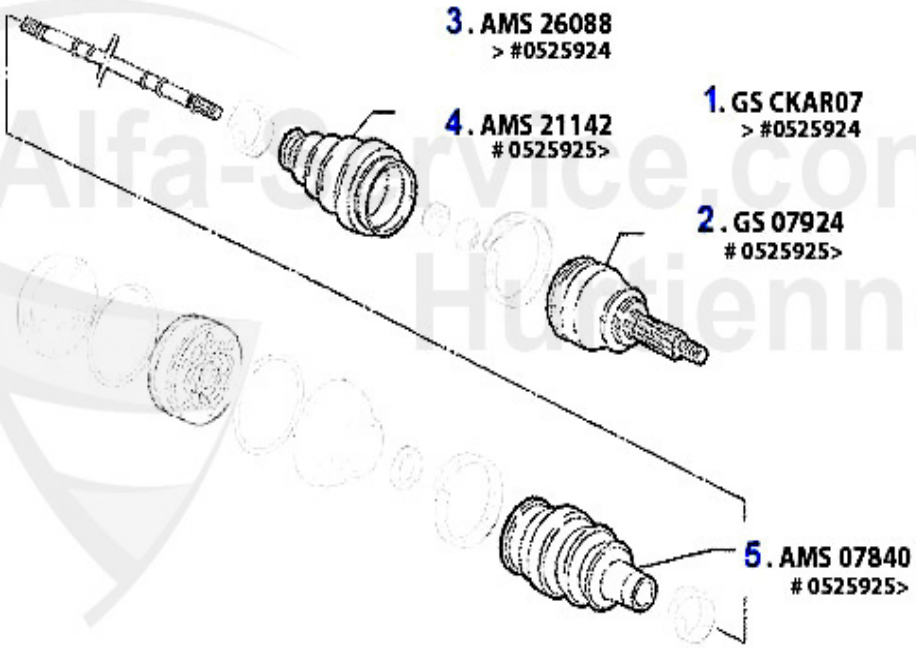

2	GS07924	OE. 46307924 CONST.VELOCITY JOI 156 1.9 JTD 8V (85KW)	142.60 EUR
3	AMS26088	OE. 60556609 Boot Set Wheel Side	24.89 EUR
4	AMS21142	OE. 46307733 BOOT SET 147,156,gtv/spider (916),Nuovo GT 3.2 V6 24V/GTA	20.42 EUR
5	AMS07840	OE. 46307840 BOOT SET 147 1.9 JTD # 3145308>	21.44 EUR

Antriebswelle/Driveshaft 156 2.4 JTD 10V

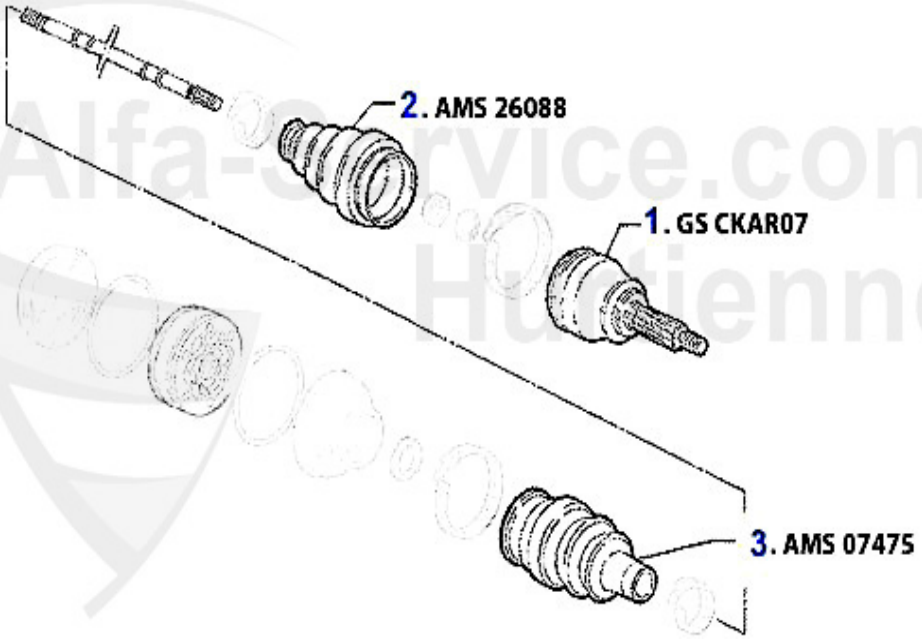

2	AMS26088	OE. 60556609 Boot Set Wheel Side	24.89 EUR
3	AMS07475	OE. 46307375 BOOT SET 147 1.9 JTD 16V 156/SW V6 24V	22.47 EUR

Antriebswelle/Driveshaft 156 2.4 JTD 20V

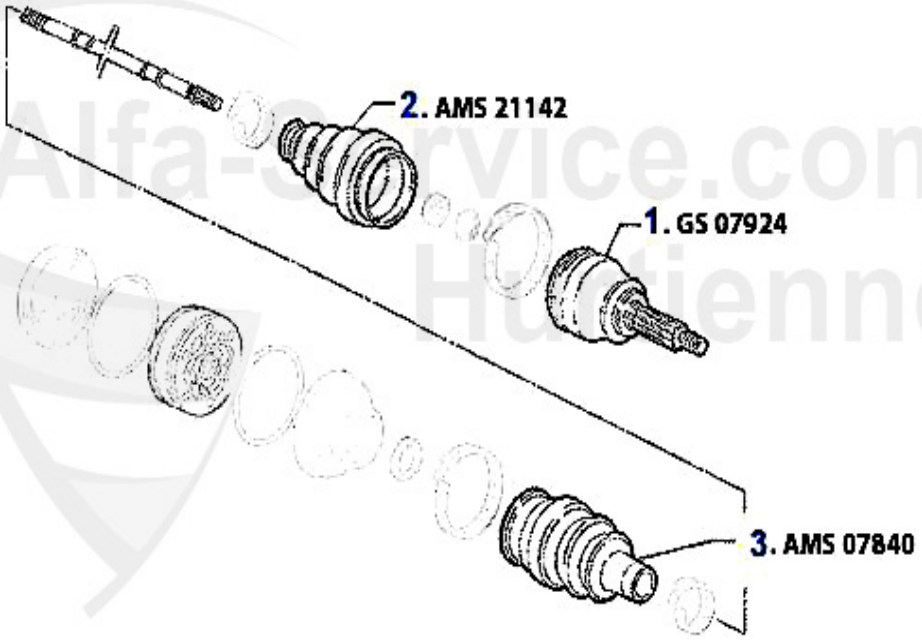

1	GS07924	OE. 46307924 CONST.VELOCITY JOI 156 1.9 JTD 8V (85KW)	142.60 EUR
2	AMS21142	OE. 46307733 BOOT SET 147,156,gtv/spider (916),Nuovo GT 3.2 V6 24V/GTA	20.42 EUR
3	AMS07840	OE. 46307840 BOOT SET 147 1.9 JTD # 3145308>	21.44 EUR

156 > DRIVETRAIN > CLUTCH > CLUTCH SET 1.6/1.8 TS 16V

Kupplungs-Kit/Clutch Set 156 1.6/1.8 TS

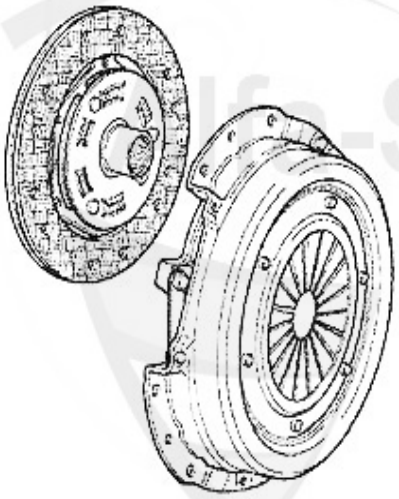

1. KK 853201
Ø 215 mm

Alfa-Service.com Hurtienne

1	KK853201	CLUTCH KIT 147,156 1.6/1.8 16V TS 09.97>,NUOVO GT 1.8 TS, OE.55190737	195.16 EUR

Ausrücker/Sleeve Bearing 156 1.6/1.8 TS

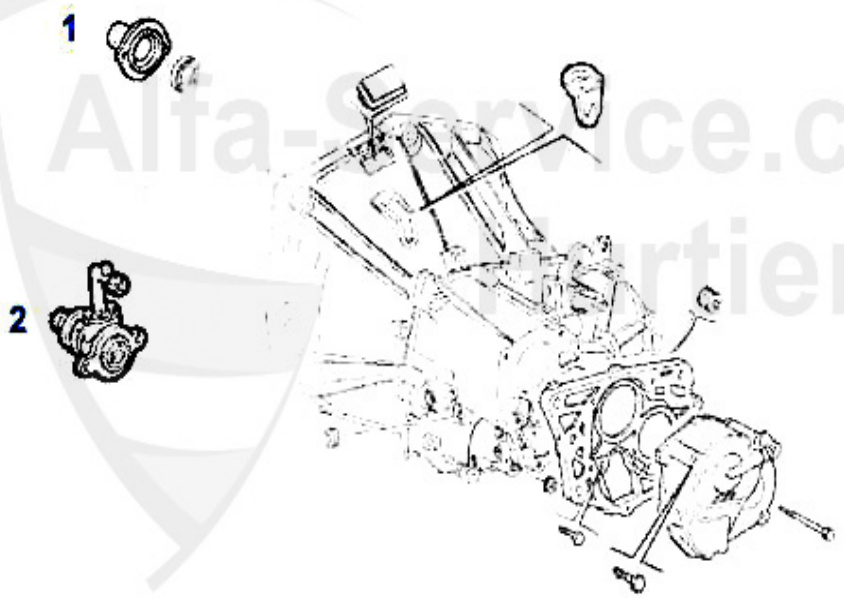

2	ZA186498	OE. 55186498 SLEEVE T/OBEARING 147,Nuovo GT 12.2003>	84.99 EUR
2	ZA46516373	OE. 55184041 SLEEVE BEARING	89.68 EUR

156 > DRIVETRAIN > CLUTCH > CLUTCH SET 2.0 TS 16V

Kupplungs-Kit/Clutch Set 156 2.0 TS

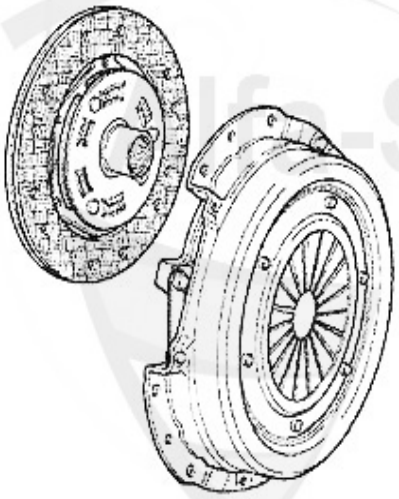

1. KK 951301
Ø 230 mm

1	KK951301	OE. 55190114 CLUTCH KIT 147,156/SW 2.0 TS, WITHOUT RELEASE B.	322.56 EUR

156 > DRIVETRAIN > CLUTCH > SLEEVE BEARING 2.0 TS 16V

Ausrücker/Sleeve Bearing 156 2.0 TS

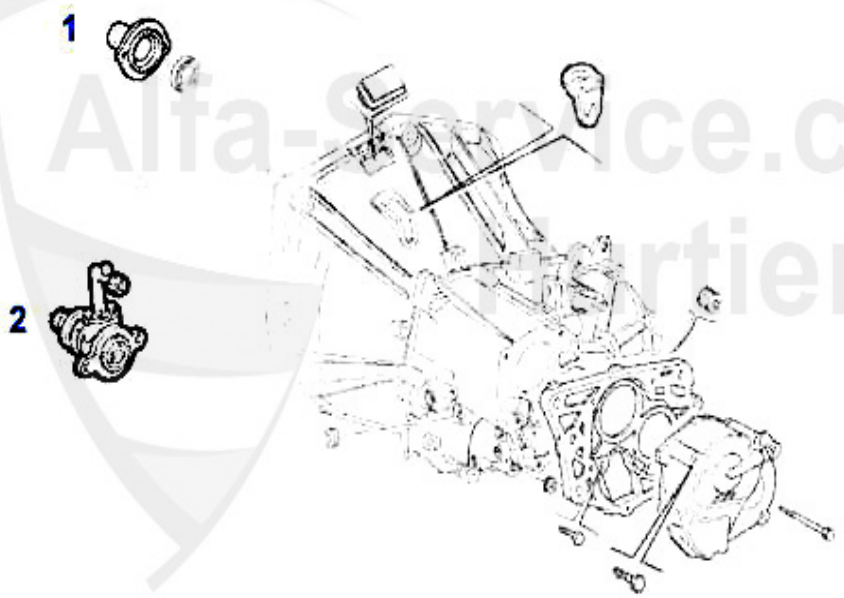

2	ZA186498	OE. 55186498 SLEEVE T/OBEARING 147,Nuovo GT 12.2003>	84.99 EUR
2	ZA46516373	OE. 55184041 SLEEVE BEARING	89.68 EUR

156 > DRIVETRAIN > CLUTCH > CLUTCH SET 2.0 JTS

Kupplungs-Kit/Clutch Set 156 2.0 JTS

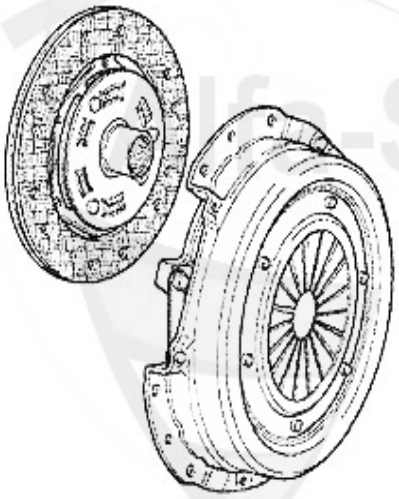

1. KK 951301
Ø 230 mm

1	KK951301	OE. 55190114 CLUTCH KIT 147,156/SW 2.0 TS, WITHOUT RELEASE B.	322.56 EUR

Ausrücker/Sleeve Bearing 156 2.0 JTS

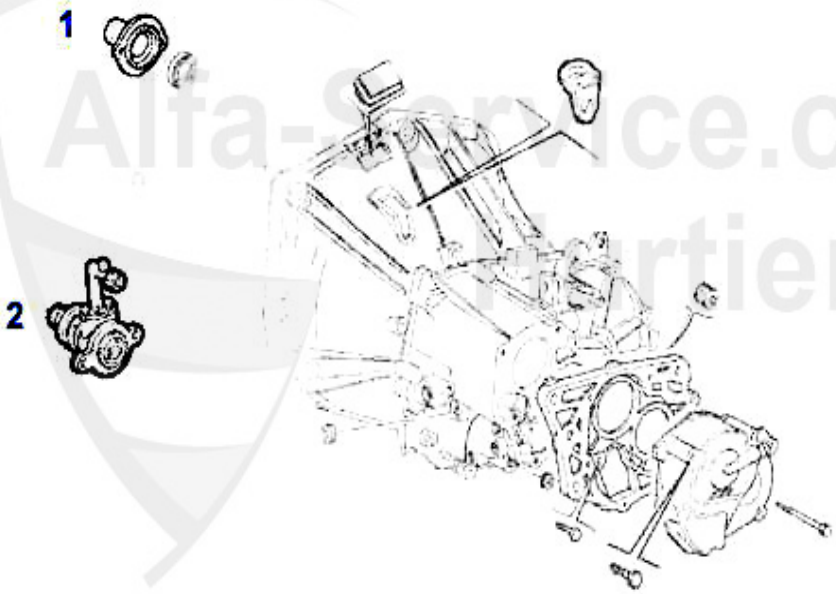

2	ZA186498	OE. 55186498 SLEEVE T/OBEARING 147,Nuovo GT 12.2003>	84.99 EUR
2	ZA46516373	OE. 55184041 SLEEVE BEARING	89.68 EUR

Kupplungs-Kit/Clutch Set 156 2.5 V6 24V

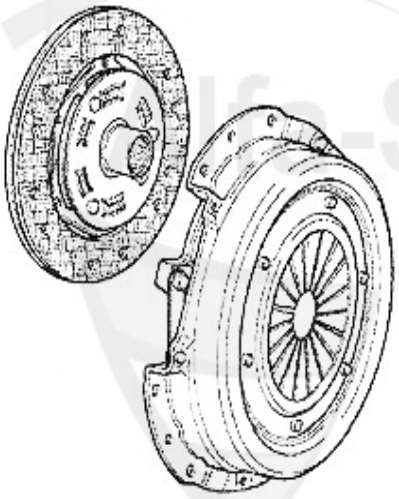

1. KK 739492
Ø 235 mm

Alfa-Service.com Hurtienne

1	KK739492	OE. 71739492 CLUTCH SET WITHOUT RELEASE B.	306.73 EUR

156 > DRIVETRAIN > CLUTCH > GUIDE BUSH F. SLEEVE BEARING 2.5 V6 24V

Ausrücker/Sleeve Bearing 156 2.5 V6 24V

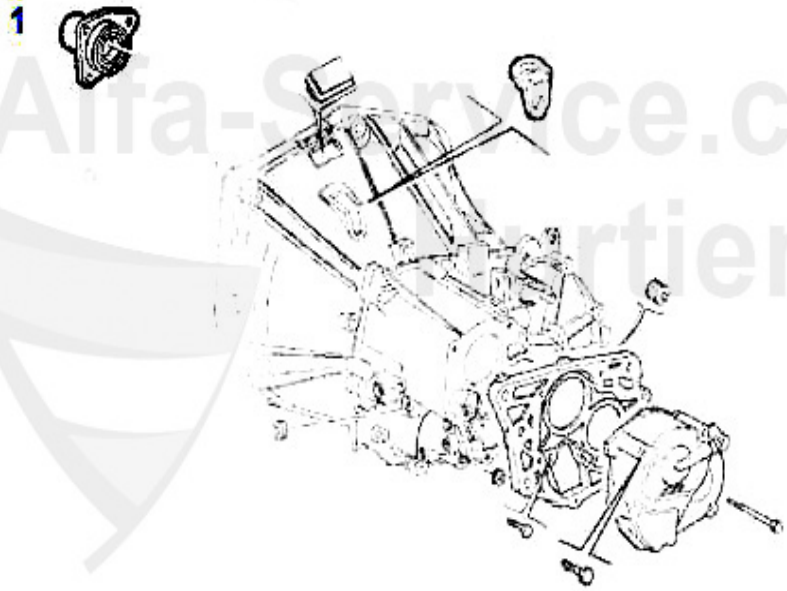

1	FH11951	OE. 46411951 Cover	16.49 EUR

156 > DRIVETRAIN > CLUTCH > CLUTCH SET 3.2 V6 24V/GTA

Kupplungs-Kit/Clutch Set 156 3.2 V6 24V/GTA

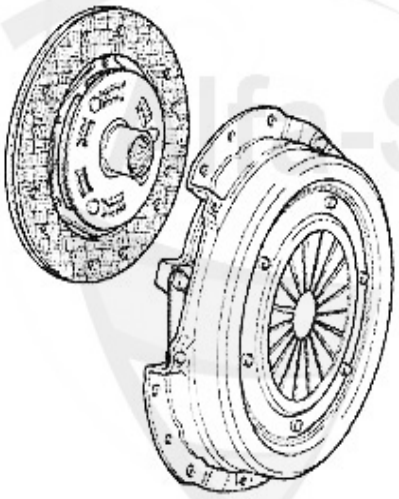

1. KK 739521
Ø 235 mm

1	KK739521	OE. 71739521 CLUTCH KIT 147,156,916 GTA	295.00 EUR

156 > DRIVETRAIN > CLUTCH > GUIDE BUSH f. SLEEVE BEARING 3.2 V6 24V/

Ausrücker/Sleeve Bearing 156 3.2 V6 24V/GTA

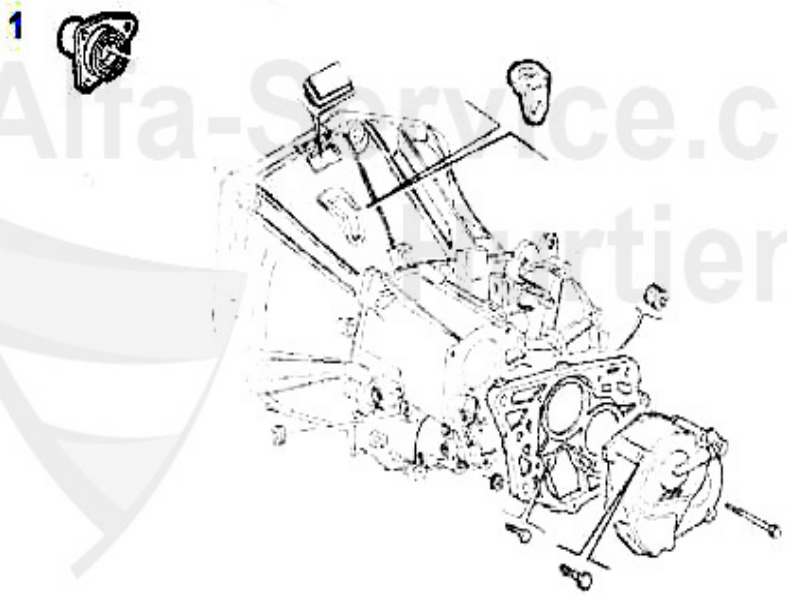

1	FH11951	OE. 46411951 Cover	16.49 EUR

Ausrücker/Sleeve Bearing 156 1.9 JTD 8V

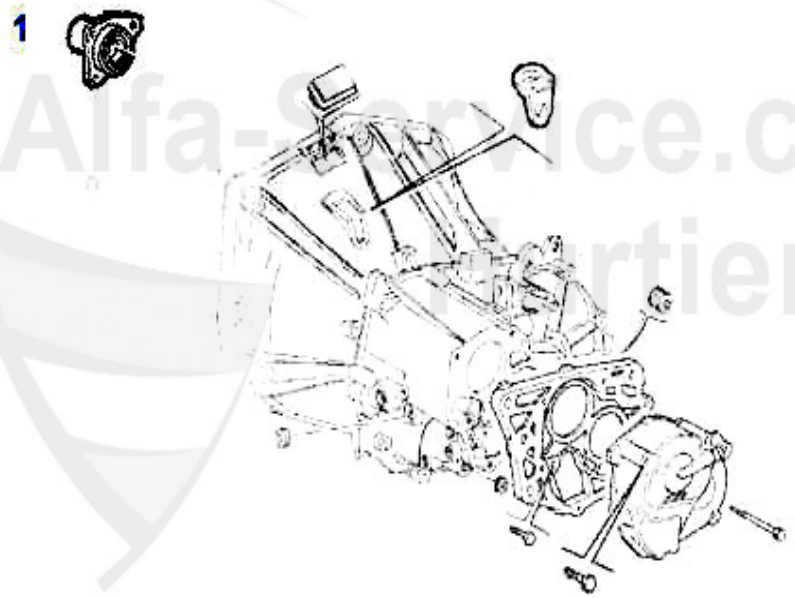

Alfa-Service.com
Martienne

1	FH11951	OE. 46411951 Cover	16.49 EUR

156 > DRIVETRAIN > CLUTCH > CLUTCH SET 1.9 JTD 8V

Kupplungs-Kit/Clutch Set 156 1.9 JTD 8V

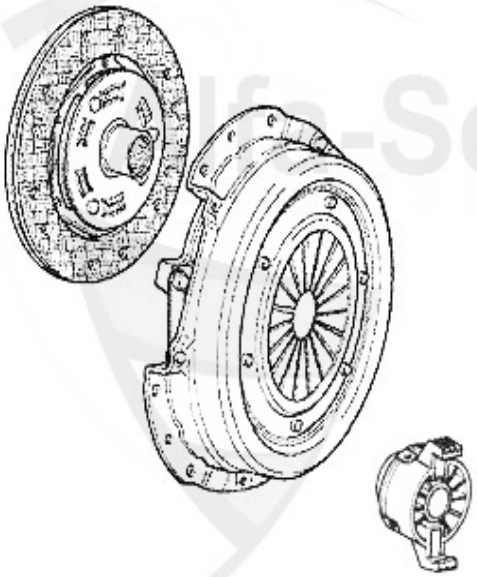

1. KK 853501
Ø 235 mm

1	KK853501	Kupplungs-Kit 145/6,156 1.9/2.4 JTD 166 2.0 TS Bj. 09.97-10.00 (ohne Ausrücker)	337.00 EUR

156 > DRIVETRAIN > CLUTCH > CLUTCH SET 1.9 JTD 16V

Kupplungs-Kit/Clutch Set 156 1.9 JTD 16V

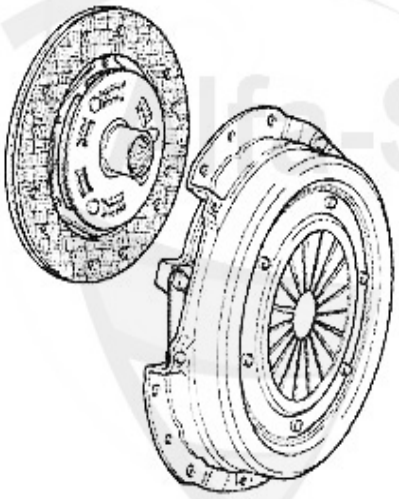

1. KK 853501
Ø 235 mm

Alfa-Service.com Hurtienne

1	KK853501	Kupplungs-Kit 145/6,156 1.9/2.4 JTD 166 2.0 TS Bj. 09.97-10.00 (ohne Ausrücker)	337.00 EUR

156 > DRIVETRAIN > CLUTCH > GUIDE BUSH f. SLEEVE BEARING 1.9 JTD 16V

Ausrücker/Sleeve Bearing 156 1.9 JTD 16V

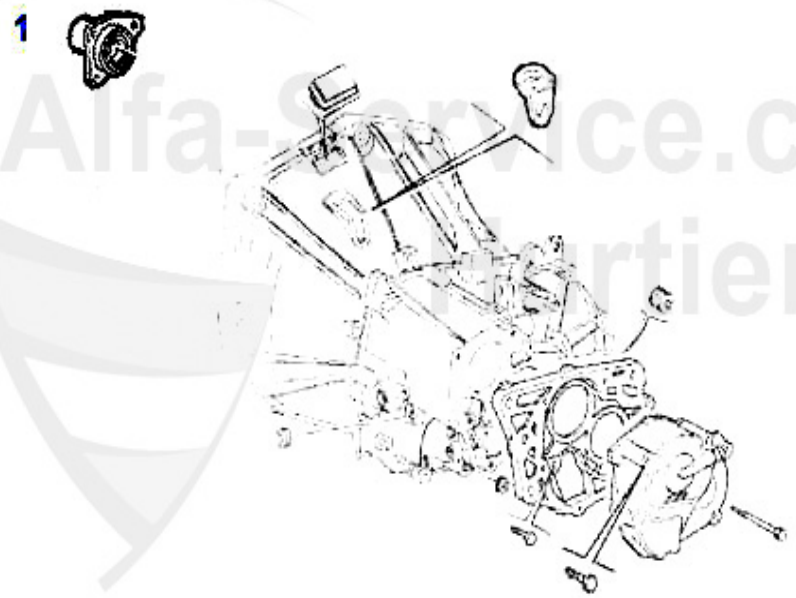

1	FH11951	OE. 46411951 Cover	16.49 EUR

156 > DRIVETRAIN > CLUTCH > CLUTCH SET 2.4 JTD 10V

Kupplungs-Kit/Clutch Set 156 2.4 JTD 10V

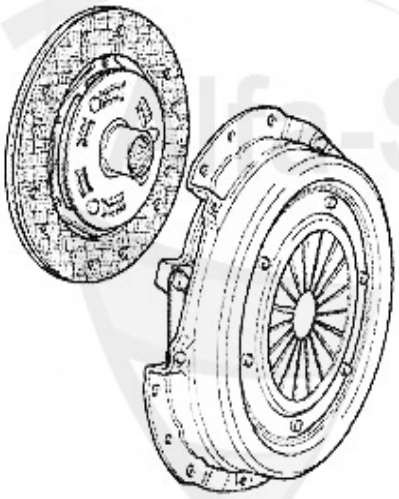

1. KK 853501
Ø 235 mm

Alfa-Service.com Hurtienne

1	KK853501	Kupplungs-Kit 145/6,156 1.9/2.4 JTD 166 2.0 TS Bj. 09.97-10.00 (ohne Ausrücker)	337.00 EUR

Ausrücker/Sleeve Bearing 156 2.4 JTD 10V

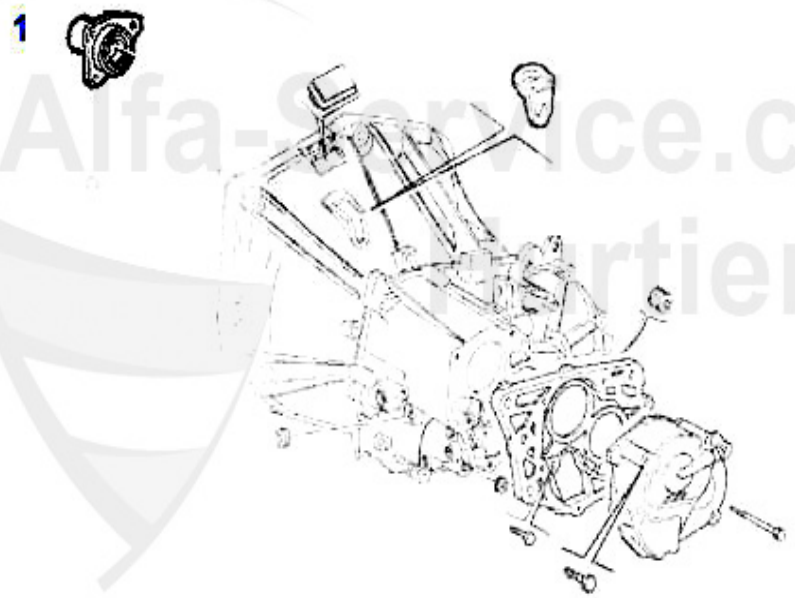

Alfa-Service.com
Martienne

1	FH11951	OE. 46411951 Cover	16.49 EUR

156 > DRIVETRAIN > CLUTCH > CLUTCH SET 2.4 JTD 20V

Kupplungs-Kit/Clutch Set 156 2.4 JTD 20V

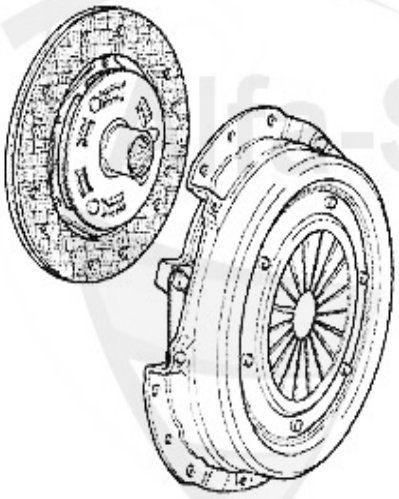

1. KK 192735

1	KK192735	OE. 55192735 KIT CLUTCH 156,166 2.4 JTD 20V	286.22 EUR

Ausrücker/Sleeve Bearing 156 2.4 JTD 20V

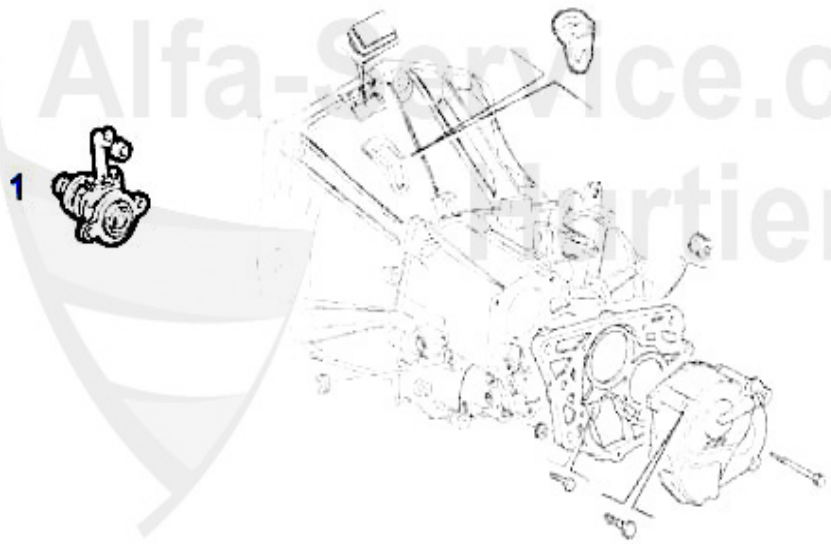

Alfa-Service.com
Hurtienne

1	ZA184529	OE. 55184529 ACTUATOR 156/166 2.4 JTD 20V	64.12 EUR

156 > DRIVETRAIN > CLUTCH ACTUATION > 1.6/1.8 TS 16V

Kupplungsbetätigung/Clutch Actuation 156 1.6/1.8 TS

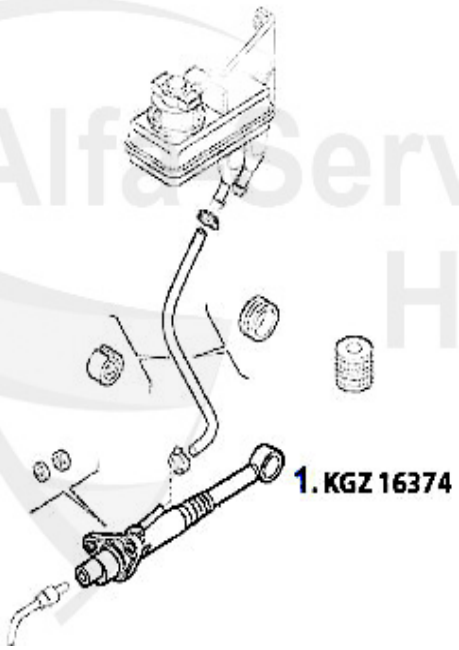

1	KGZ16374	OE. 46516374 CLUTCH PUMP 156 TS/JTS/JTD 20V	91.30 EUR

156 > DRIVETRAIN > CLUTCH ACTUATION > 2.0 TS 16V

Kupplungsbetätigung/Clutch Actuation 156 2.0 TS

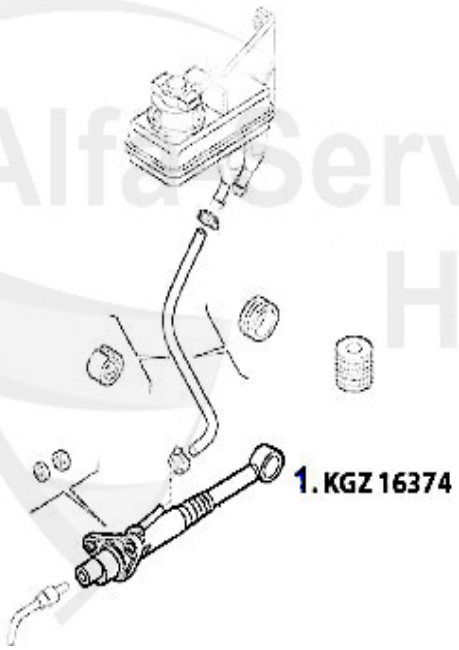

1	KGZ16374	OE. 46516374 CLUTCH PUMP 156 TS/JTS/JTD 20V	91.30 EUR

Kupplungsbetätigung/Clutch Actuation 156 2.0 JTS

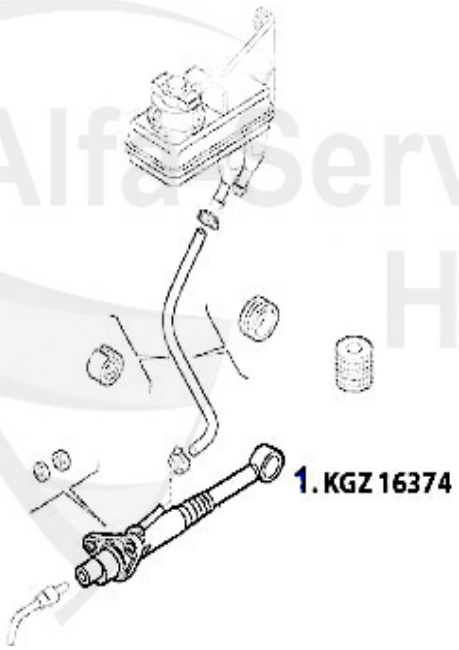

AlfaService.com Hurtienne

1	KGZ16374	OE. 46516374 CLUTCH PUMP 156 TS/JTS/JTD 20V	91.30 EUR

156 > DRIVETRAIN > CLUTCH ACTUATION > 2.5 V6 24V

Kupplungsbetätigung/Clutch Actuation 156 2.5 V6 24V

1	KGZ24868	Kupplungsgeberzylinder 156 1.9/2.4 JTD,2.5/3.2 V6 24V/GTA	91.30 EUR
2	KNZ028	OE. 60801577 CLUTCH SLAVE CYLINDER	51.50 EUR
2	KNZ008	OE. 60502665 CLUTCH SLAVE CYLINDER	51.50 EUR

156 > DRIVETRAIN > CLUTCH ACTUATION > 3.2 V6 24V/GTA

Kupplungsbetätigung/Clutch Actuation 156 3.2 V6 24V/GTA

1	KGZ24868	Kupplungsgeberzylinder 156 1.9/2.4 JTD,2.5/3.2 V6 24V/GTA	91.30 EUR
2	KNZ028	OE. 60801577 CLUTCH SLAVE CYLINDER	51.50 EUR
2	KNZ008	OE. 60502665 CLUTCH SLAVE CYLINDER	51.50 EUR
3	KNZ76063	OE. 60607663 CLUTCH CYLINDER 147, Nuovo GT 1.9 JTD/3.2 V6 24V/GTA Selespeed	368.28 EUR

156 > DRIVETRAIN > CLUTCH ACTUATION > 1.9 JTD 8V

Kupplungsbetätigung/Clutch Actuation 156 1.9 JTD 8V

1	KGZ24868	Kupplungsgeberzylinder 156 1.9/2.4 JTD,2.5/3.2 V6 24V/GTA	91.30 EUR
2	KNZ028	OE. 60801577 CLUTCH SLAVE CYLINDER	51.50 EUR
2	KNZ008	OE. 60502665 CLUTCH SLAVE CYLINDER	51.50 EUR

156 > DRIVETRAIN > CLUTCH ACTUATION > 1.9 JTD 16V

Kupplungsbetätigung/Clutch Actuation 156 1.9 JTD 16V

Alfa-Service.com Hurtione

1	KGZ24868	Kupplungsgeberzylinder 156 1.9/2.4 JTD,2.5/3.2 V6 24V/GTA	91.30 EUR
2	KNZ028	OE. 60801577 CLUTCH SLAVE CYLINDER	51.50 EUR
2	KNZ008	OE. 60502665 CLUTCH SLAVE CYLINDER	51.50 EUR

156 > DRIVETRAIN > CLUTCH ACTUATION > 2.4 JTD 10V

Kupplungsbetätigung/Clutch Actuation 156 2.4 JTD 10V

1	KGZ24868	Kupplungsgeberzylinder 156 1.9/2.4 JTD,2.5/3.2 V6 24V/GTA	91.30 EUR
2	KNZ028	OE. 60801577 CLUTCH SLAVE CYLINDER	51.50 EUR
2	KNZ008	OE. 60502665 CLUTCH SLAVE CYLINDER	51.50 EUR

Kupplungsbetätigung/Clutch Actuation 156 2.4 JTD 20V

1	KGZ24868	Kupplungsgeberzylinder 156 1.9/2.4 JTD,2.5/3.2 V6 24V/GTA	91.30 EUR

156 > SUSPENSION > STRUT TS 16V

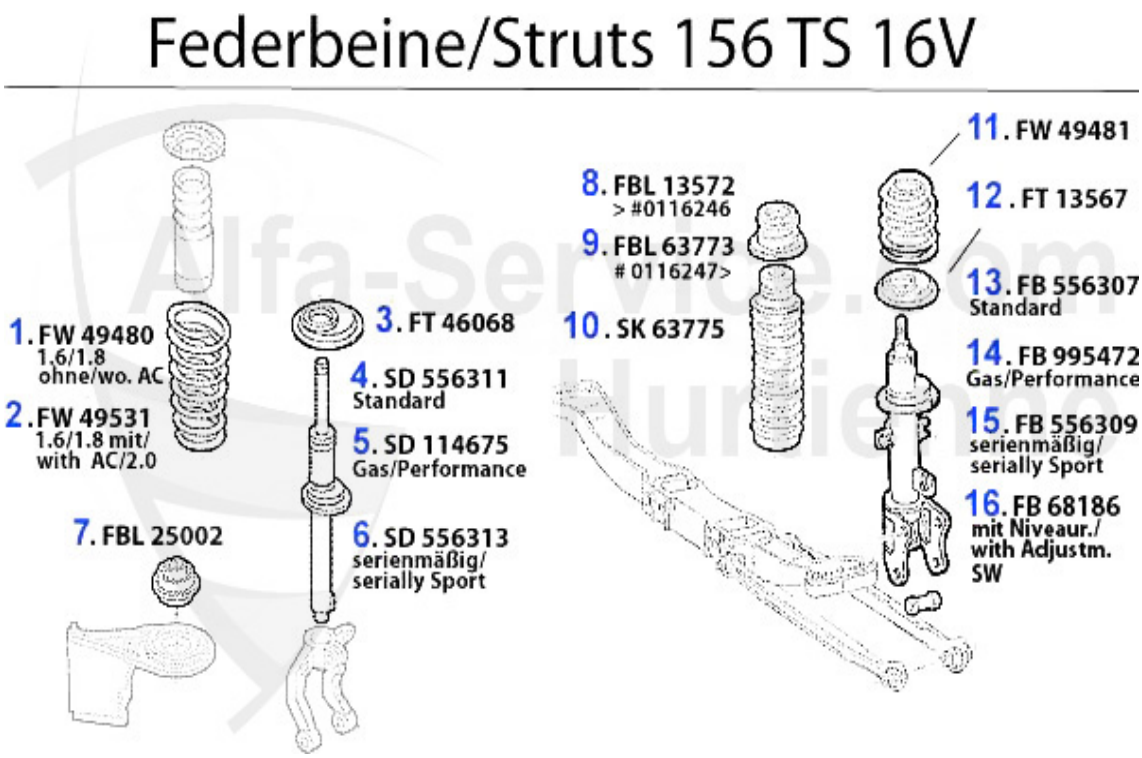

1	FW49480	Fahrwerksfeder vorne 156 1.6/1.8 16 V TS (ohne klima)	56.83 EUR
2	FW49531	Fahrwerksfeder vorne 156 4-zylinder 1.6/1.8 16V TS (mit klima) 2.0 16 V TS (ohne klima)	80.99 EUR
3	FT46068	OE.46746068 RING f. STRUT 147 FA (RUBBER)	4.51 EUR
4	SD556311	Stossdämpfer vorne 156 oben Stift/u nten Schelle,1-Rohr Gas für Standar dfahrwerk,Nuovo GT 4-Zyl. > #040893	107.72 EUR
5	SD114675	SHOCK ABSORBER FRONT 147,156, 1-PIPE GAS PERFORMANCE, OE.60671076	119.00 EUR
6	SD556313	Stossdämpfer vorne 156 oben Stift/u nten Schelle ,1-Rohr Gas für Serien sportfahrwerk	114.89 EUR
7	FBL25002	OE.60625002,STRUT BEARING FRONT 147, 156,166, NOUVO GT	24.99 EUR
8	FBL13572	OE. 60613572 ELASTIC PAD f. REAR STRUT 156 > #0116246	***
9	FBL63773	OE. 60663773 ELASTIC PAD f. REAR STRUT 156 # 0116246>	72.47 EUR
10	SK63775	OE. 60663775 SHIELD f. STRUT RA 147	21.99 EUR
11	FW49481	Fahrwerksfeder hinten 147,156,Nuovo GT	41.00 EUR
12	FT13567	OE. 60613567 RING f. STRAUT 147 RA	14.90 EUR
13	FB556307	Federbein hinten 156,2-Rohr Gas	132.34 EUR
14	FB995472	Federbein hinten 156,1-Rohr Gas Sp ortdämpfer zur Nachrüstung	179.52 EUR
15	FB556309	Federbein hinten 156,2-Rohr Gas,für Seriensportfahrwerk	142.60 EUR
16	FB68186	OE. 60668186 RAER SHOCK ABSORBER 156 SW with ADJUSTMENT	595.00 EUR

156 > SUSPENSION > STRUT 2.0 JTS

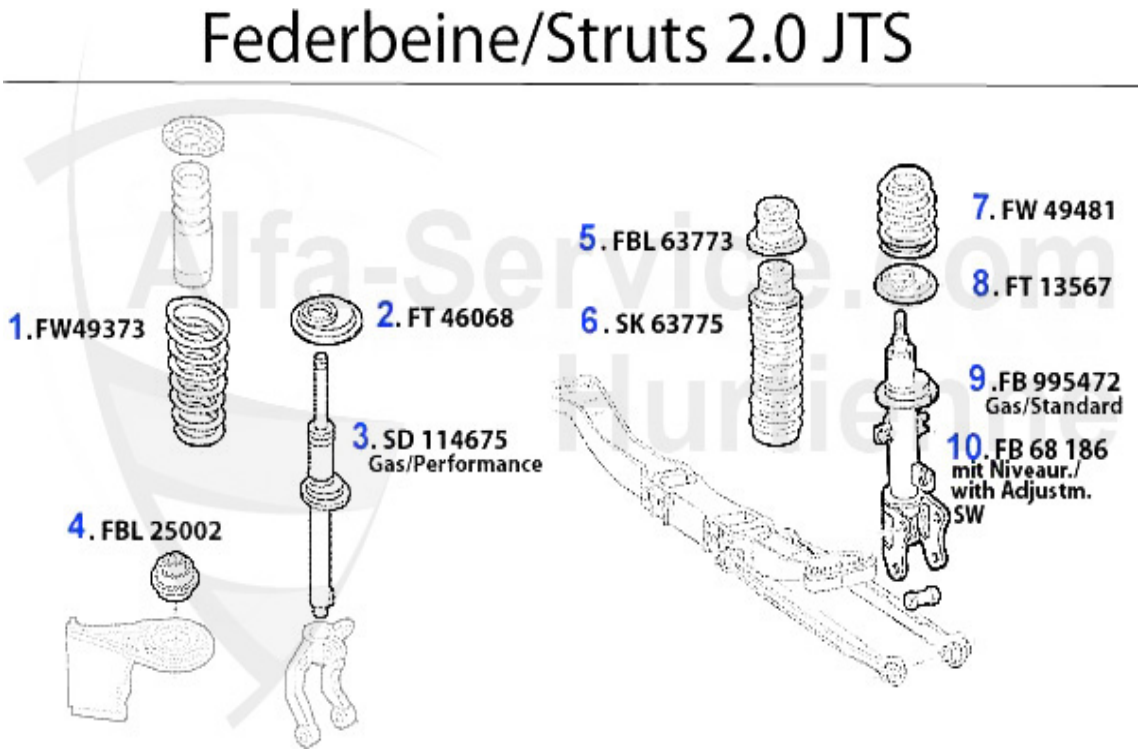

1	FW49373	Fahrwerksfeder vorne 156 2.0 16V TS (mit klima), 1.9 JTD (ohne klima)	55.91 EUR
2	FT46068	OE.46746068 RING f. STRUT 147 FA (RUBBER)	4.51 EUR
3	SD114675	SHOCK ABSORBER FRONT 147,156, 1-PIPE GAS PERFORMANCE, OE.60671076	119.00 EUR
4	FBL25002	OE.60625002,STRUT BEARING FRONT 147, 156,166, NOUVO GT	24.99 EUR
5	FBL63773	OE. 60663773 ELASTIC PAD f. REAR STRUT 156 # 0116246>	72.47 EUR
6	SK63775	OE. 60663775 SHIELD f. STRUT RA 147	21.99 EUR
7	FW49481	Fahrwerksfeder hinten 147,156,Nuovo GT	41.00 EUR
8	FT13567	OE. 60613567 RING f. STRAUT 147 RA	14.90 EUR
9	FB995472	Federbein hinten 156,1-Rohr Gas Sp ortdämpfer zur Nachrüstung	179.52 EUR
10	FB68186	OE. 60668186 RAER SHOCK ABSORBER 156 SW with ADJUSTMENT	595.00 EUR

156 > SUSPENSION > STRUT 2.5 V6 24V

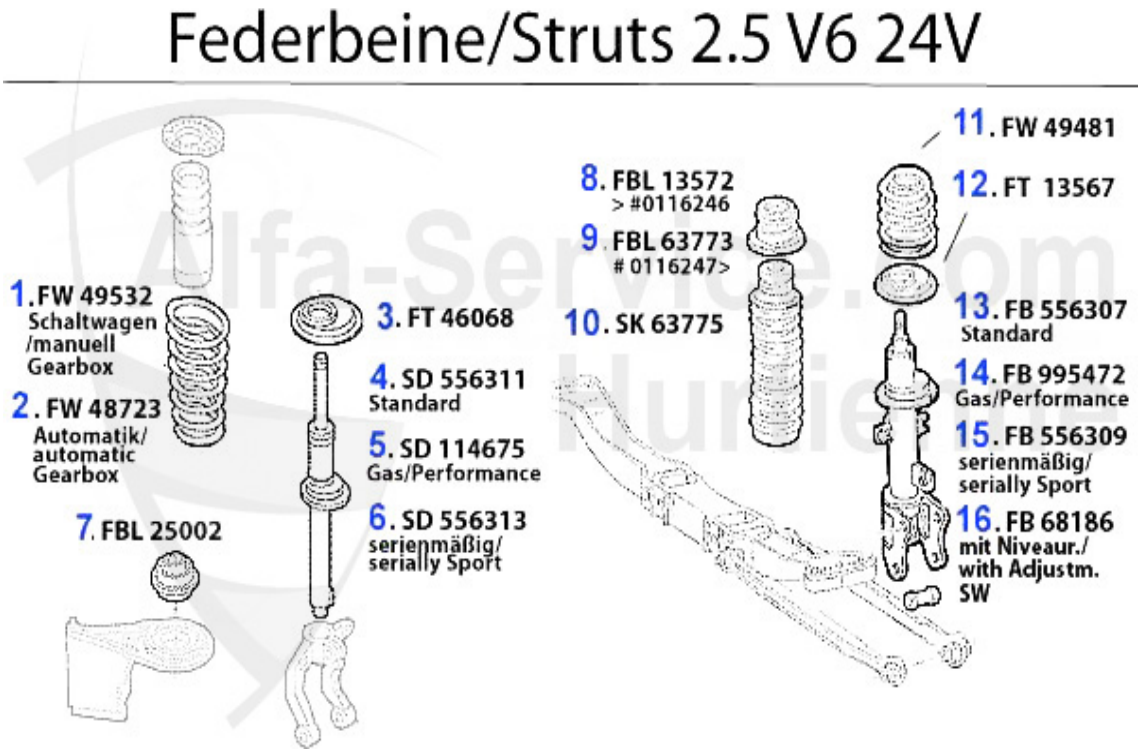

1	FW49532	Fahrwerksfeder vorne 156 6-zylinder 2.4 JTD (nur ohne klima)	60.52 EUR
2	FW48723	OE. 60668437 SPRING FA Automatic	69.25 EUR
3	FT46068	OE.46746068 RING f. STRUT 147 FA (RUBBER)	4.51 EUR
4	SD556311	Stossdämpfer vorne 156 oben Stift/u nten Schelle,1-Rohr Gas für Standar dfahrwerk,Nuovo GT 4-Zyl. > #040893	107.72 EUR
5	SD114675	SHOCK ABSORBER FRONT 147,156, 1-PIPE GAS PERFORMANCE, OE.60671076	119.00 EUR
6	SD556313	Stossdämpfer vorne 156 oben Stift/u nten Schelle ,1-Rohr Gas für Serien sportfahrwerk	114.89 EUR
7	FBL25002	OE.60625002,STRUT BEARING FRONT 147, 156,166, NOUVO GT	24.99 EUR
8	FBL13572	OE. 60613572 ELASTIC PAD f. REAR STRUT 156 > #0116246	***
9	FBL63773	OE. 60663773 ELASTIC PAD f. REAR STRUT 156 # 0116246>	72.47 EUR
10	SK63775	OE. 60663775 SHIELD f. STRUT RA 147	21.99 EUR
11	FW49481	Fahrwerksfeder hinten 147,156,Nuovo GT	41.00 EUR
12	FT13567	OE. 60613567 RING f. STRAUT 147 RA	14.90 EUR
13	FB556307	Federbein hinten 156,2-Rohr Gas	132.34 EUR
14	FB995472	Federbein hinten 156,1-Rohr Gas Sp ortdämpfer zur Nachrüstung	179.52 EUR
15	FB556309	Federbein hinten 156,2-Rohr Gas,für Seriensportfahrwerk	142.60 EUR
16	FB68186	OE. 60668186 RAER SHOCK ABSORBER 156 SW with ADJUSTMENT	595.00 EUR

156 > SUSPENSION > STRUT 3.2 V6 24V/GTA

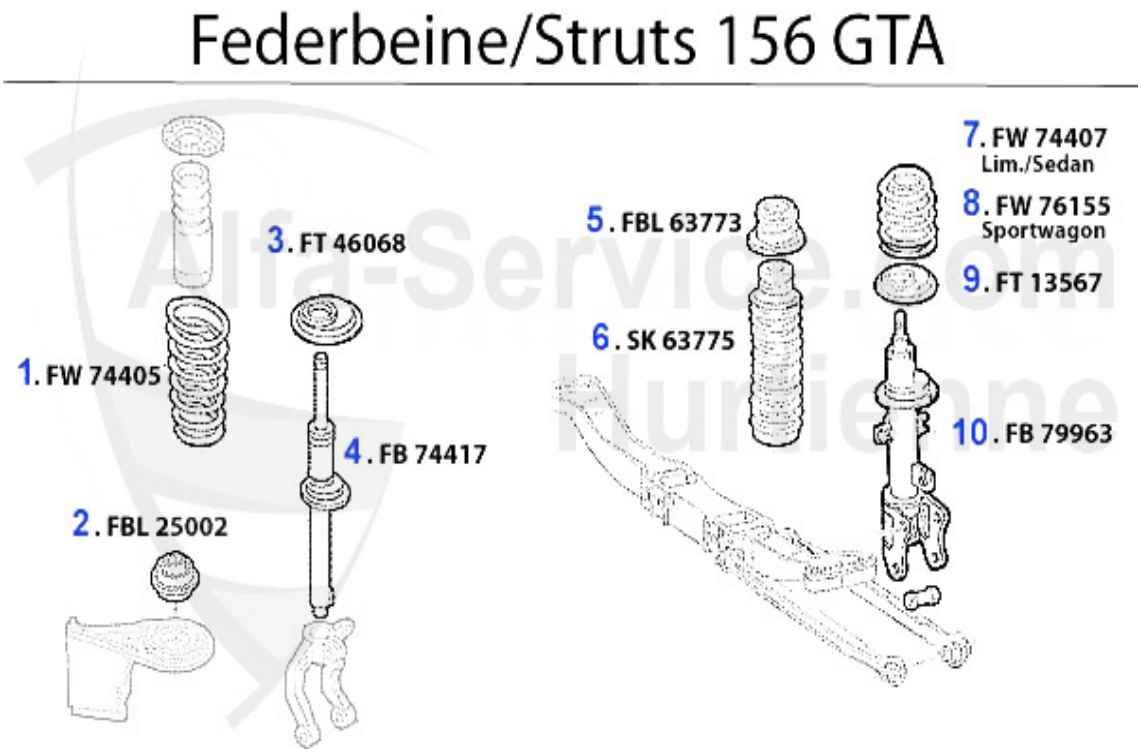

1	FW74405	OE. 60674405 SPRING FA 147 GTA	70.78 EUR
2	FBL25002	OE.60625002,STRUT BEARING FRONT 147, 156,166, NOUVO GT	24.99 EUR
3	FT46068	OE.46746068 RING f. STRUT 147 FA (RUBBER)	4.51 EUR
4	FB74417	OE. 60674417 SHOCK ABSORBER FA 156 GTA	148.75 EUR
5	FBL63773	OE. 60663773 ELASTIC PAD f. REAR STRUT 156 # 0116246>	72.47 EUR
6	SK63775	OE. 60663775 SHIELD f. STRUT RA 147	21.99 EUR
7	FW74407	OE. 60674407 SPRING RA 156 GTA SEDAN	70.78 EUR
8	FW76155	OE. 60676155 SPRING RA 156 SW GTA	60.52 EUR
9	FT13567	OE. 60613567 RING f. STRAUT 147 RA	14.90 EUR
10	FB79963	OE. 60679963 SHOCK ABSORBER RA 156/SW GTA	143.62 EUR

156 > SUSPENSION > STRUT 1.9 JTD 8/16V

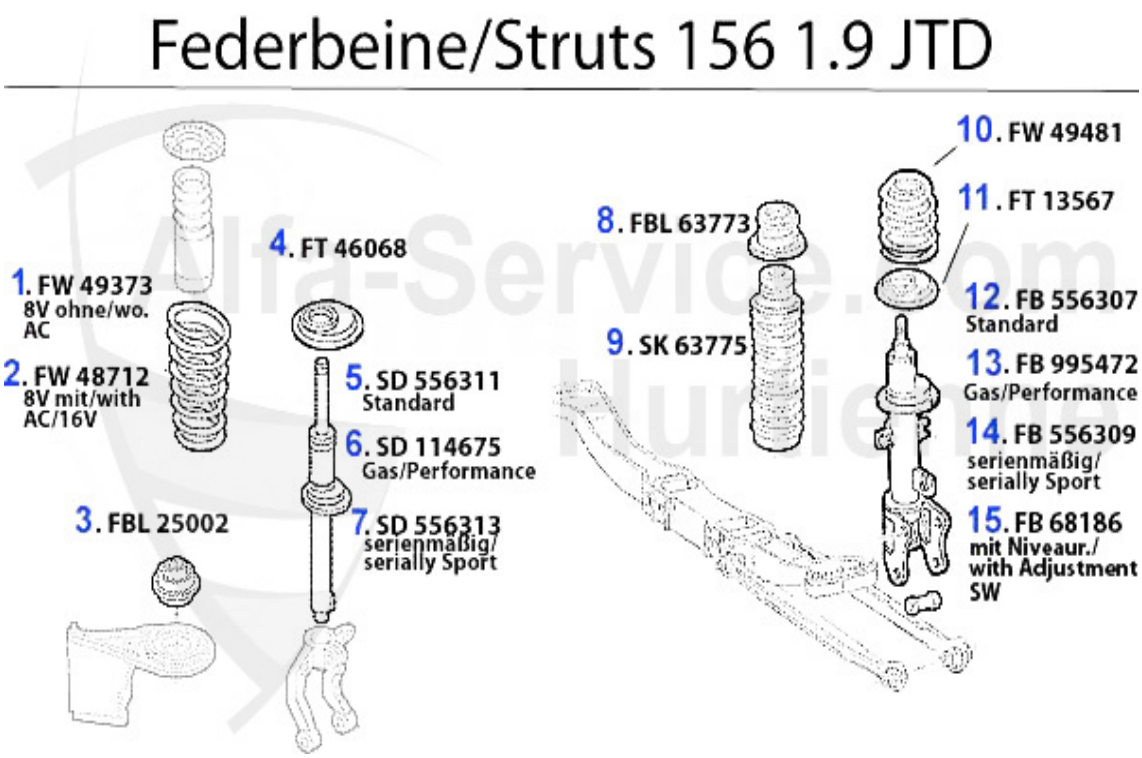

1	FW49373	Fahrwerksfeder vorne 156 2.0 16V TS (mit klima), 1.9 JTD (ohne klima)	55.91 EUR
2	FW48712	OE. 60668248 SPRING FA 156 1.9 JTD with AC	70.78 EUR
3	FBL25002	OE.60625002,STRUT BEARING FRONT 147, 156,166, NOUVO GT	24.99 EUR
4	FT46068	OE.46746068 RING f. STRUT 147 FA (RUBBER)	4.51 EUR
5	SD556311	Stossdämpfer vorne 156 oben Stift/u nten Schelle,1-Rohr Gas für Standar dfahrwerk,Nuovo GT 4-Zyl. > #040893	107.72 EUR
6	SD114675	SHOCK ABSORBER FRONT 147,156, 1-PIPE GAS PERFORMANCE, OE.60671076	119.00 EUR
7	SD556313	Stossdämpfer vorne 156 oben Stift/u nten Schelle ,1-Rohr Gas für Serien sportfahrwerk	114.89 EUR
8	FBL63773	OE. 60663773 ELASTIC PAD f. REAR STRUT 156 # 0116246>	72.47 EUR
9	SK63775	OE. 60663775 SHIELD f. STRUT RA 147	21.99 EUR
10	FW49481	Fahrwerksfeder hinten 147,156,Nuovo GT	41.00 EUR
11	FT13567	OE. 60613567 RING f. STRAUT 147 RA	14.90 EUR
12	FB556307	Federbein hinten 156,2-Rohr Gas	132.34 EUR
13	FB995472	Federbein hinten 156,1-Rohr Gas Sp ortdämpfer zur Nachrüstung	179.52 EUR
14	FB556309	Federbein hinten 156,2-Rohr Gas,für Seriensportfahrwerk	142.60 EUR
15	FB68186	OE. 60668186 RAER SHOCK ABSORBER 156 SW with ADJUSTMENT	595.00 EUR

156 > SUSPENSION > STRUT 2.4 JTD 10/20V

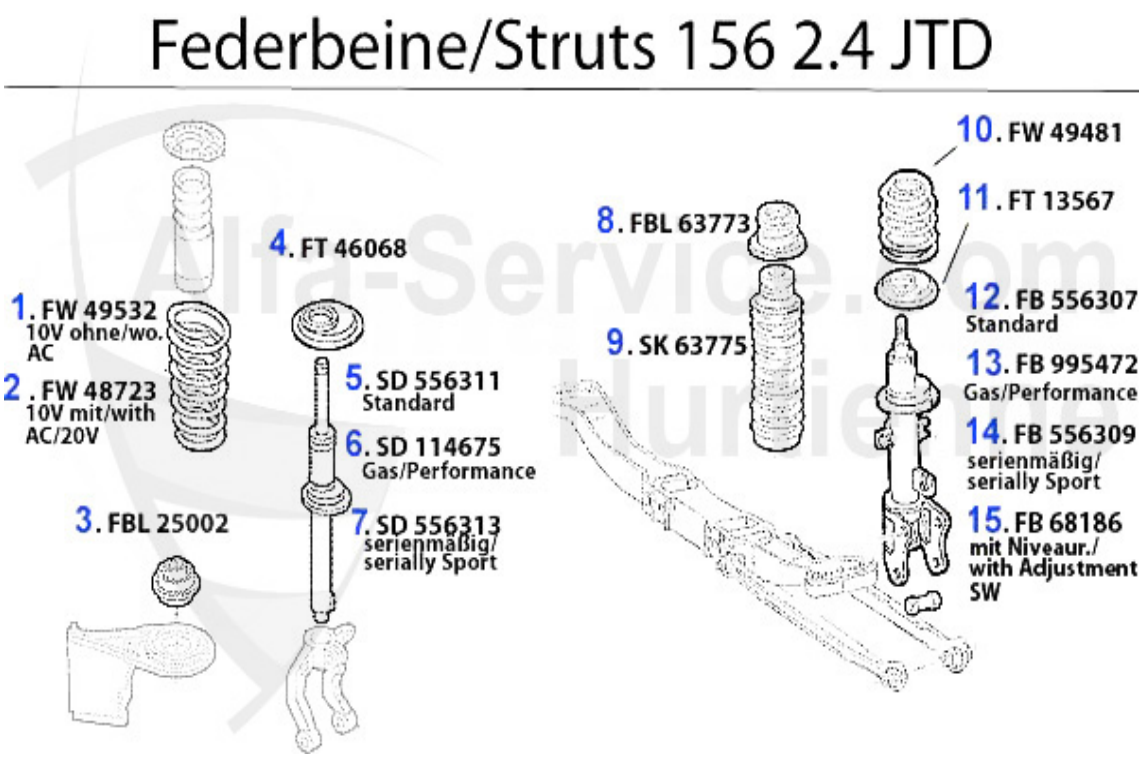

1	FW49532	Fahrwerksfeder vorne 156 6-zylinder 2.4 JTD (nur ohne klima)	60.52 EUR
2	FW48723	OE. 60668437 SPRING FA Automatic	69.25 EUR
3	FBL25002	OE.60625002,STRUT BEARING FRONT 147, 156,166, NOUVO GT	24.99 EUR
4	FT46068	OE.46746068 RING f. STRUT 147 FA (RUBBER)	4.51 EUR
5	SD556311	Stossdämpfer vorne 156 oben Stift/u nten Schelle,1-Rohr Gas für Standar dfahrwerk,Nuovo GT 4-Zyl. > #040893	107.72 EUR
6	SD114675	SHOCK ABSORBER FRONT 147,156, 1-PIPE GAS PERFORMANCE, OE.60671076	119.00 EUR
7	SD556313	Stossdämpfer vorne 156 oben Stift/u nten Schelle ,1-Rohr Gas für Serien sportfahrwerk	114.89 EUR
8	FBL63773	OE. 60663773 ELASTIC PAD f. REAR STRUT 156 # 0116246>	72.47 EUR
9	SK63775	OE. 60663775 SHIELD f. STRUT RA 147	21.99 EUR
10	FW49481	Fahrwerksfeder hinten 147,156,Nuovo GT	41.00 EUR
11	FT13567	OE. 60613567 RING f. STRAUT 147 RA	14.90 EUR
12	FB556307	Federbein hinten 156,2-Rohr Gas	132.34 EUR
13	FB995472	Federbein hinten 156,1-Rohr Gas Sp ortdämpfer zur Nachrüstung	179.52 EUR
14	FB556309	Federbein hinten 156,2-Rohr Gas,für Seriensportfahrwerk	142.60 EUR
15	FB68186	OE. 60668186 RAER SHOCK ABSORBER 156 SW with ADJUSTMENT	595.00 EUR

156 > SUSPENSION > ATTACHMENT FRONT

Aufhängung/Attachment 156 vorne/front

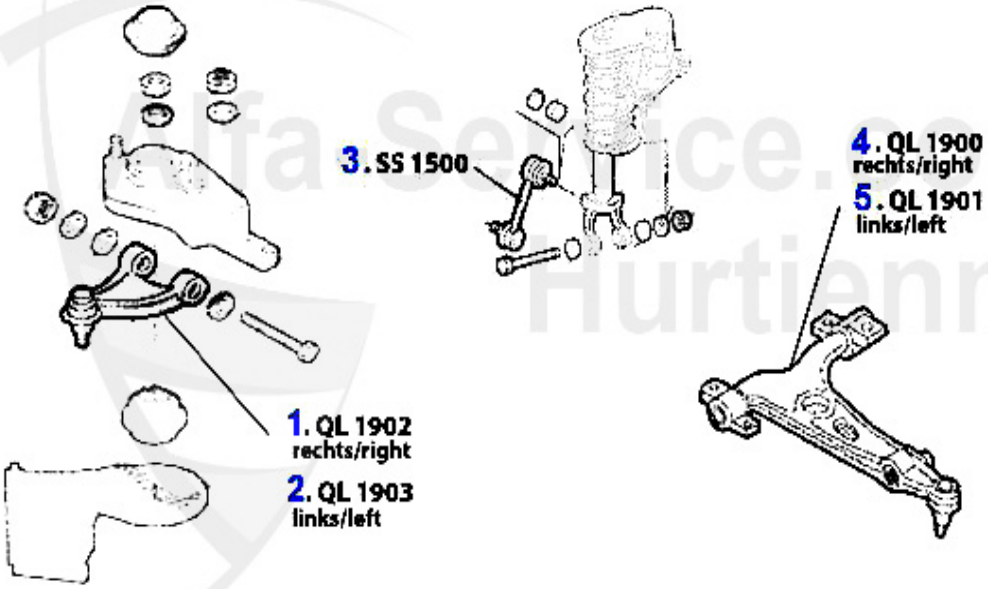

1	QL1902	OE. 51776326 UPPER RIGHT SWINGING ARM 147, 156, Nuovo GT	77.65 EUR
2	QL1903	OE. 51776327 UPPER LEFT SWINGING ARM 147, 156, Nuovo GT	77.65 EUR
3	SS1500	OE. 46443389 FRONT STABILIZER 147, 156, Nouvo GT	27.18 EUR
4	QL1900	OE.60652466 front lower control arm right side,147,156, steel forged	125.00 EUR
5	QL1901	FRONT LOWER CONTROL ARM LEFT SIDE STEEL FORGED,147,156, OE. 60652465	125.00 EUR

Aufhängung/Attachment 156 hinten/rear

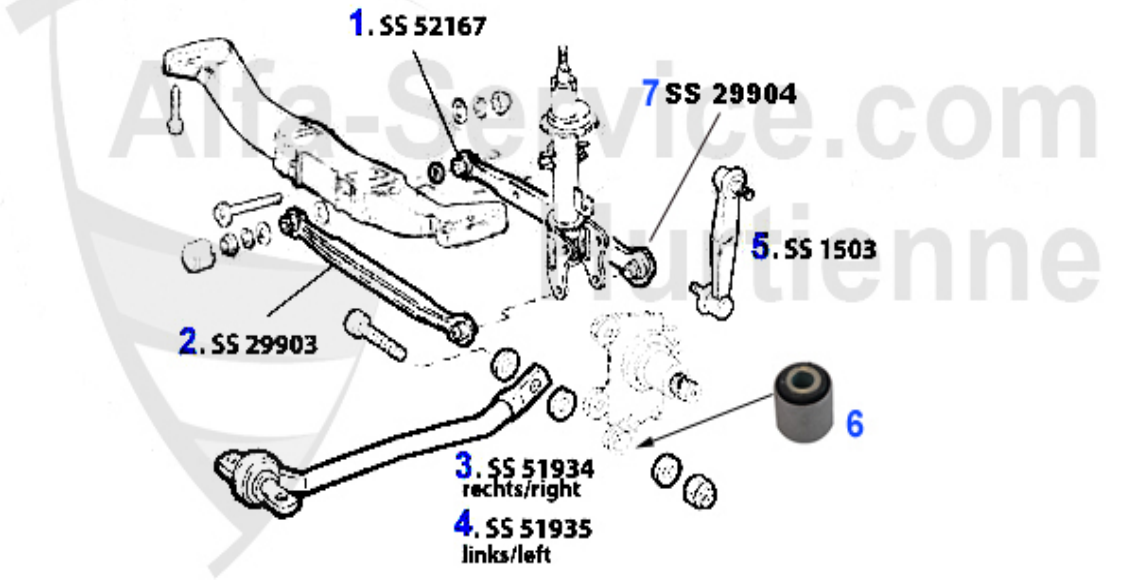

1	SS52167	Stabilisator-Strebe 147,156 hinten/ innen	53.86 EUR
2	SS29903	Stabilisator-Strebe 147,156 hinten/ innen	53.86 EUR
3	SS51934	OE. 60651934 Rod	93.94 EUR
4	SS51935	OE. 60651935 Rod	93.40 EUR
5	SS1503	OE. 60699021/60613575 REAR STABILIZER 147, 156, Nuovo GT	35.39 EUR
6	AB9034	OE. 60682636 BUSHING	12.90 EUR
7	SS29904	BUSHING FOR REAR ANTI-ROLL BAR 147/156	11.90 EUR

156 > SUSPENSION > WHEEL BEARING

1	RN16025	OE. 60671437 BEARING	162.99 EUR
2	RN3000	Radnabe vorne 156,gtv/spider (916)	74.99 EUR
3	RN16026	OE.60652014 WHEEL HUB 147,156, NUOVO GT WITH ABS	162.01 EUR

Lenkung/Steering 156

1	SSK1103	Spurstangenkopf links 147,156,166	37.00 EUR
2	SSK1102	Spurstangenkopf rechts 147,156,166	37.00 EUR
3	LMS91005	Lenkmanschette (1Stk.) links/rechts 147,156,166	22.99 EUR

156 > BRAKE > BRAKE DISKS >2002

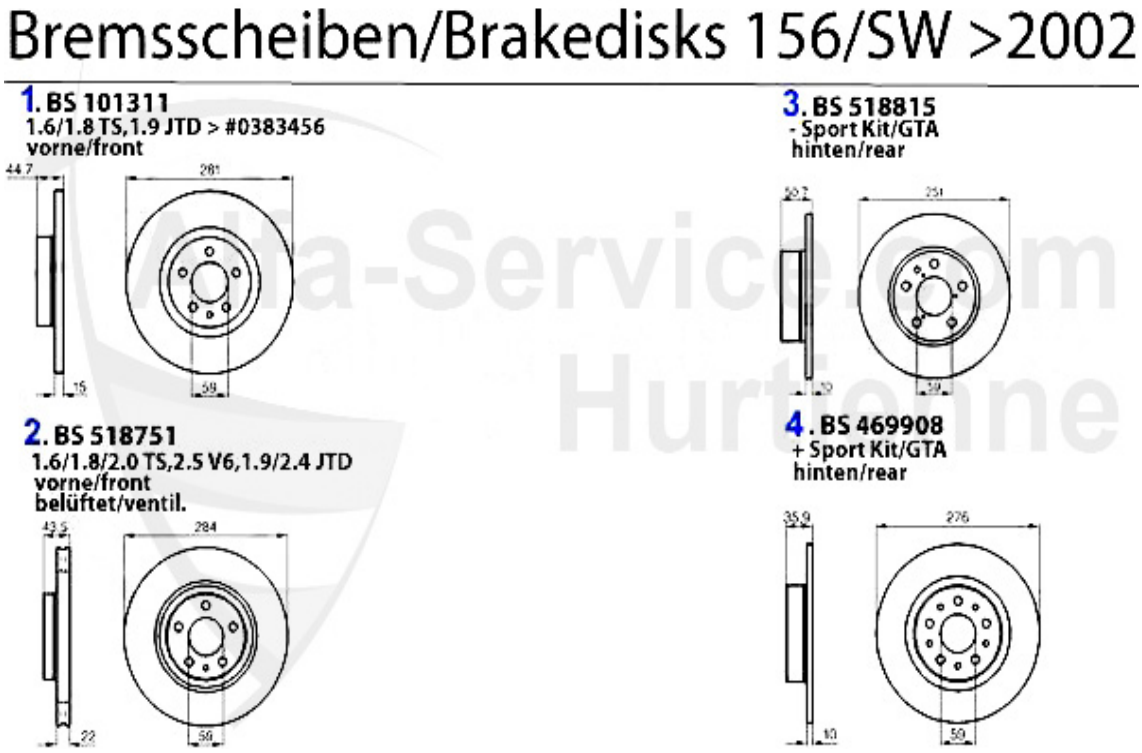

1	BS101311	FRONT BRAKE DISC 147 1.6 16V TS,156 1.6/ 1.8/16V TS/1.9 JTD	76.95 EUR
2	BS518751	OE. 71739568 FRONT BRAKE DISK 147, 156, 164, gtv/spider (916)	70.78 EUR
3	BS518815	OE. 71738911 REAR BRAKE DISK 147, 156, 164	70.78 EUR
4	BS469908	OE. 46469908 REAR BRAKE DISC	78.99 EUR

156 > BRAKE > BRAKE DISKS 2002>

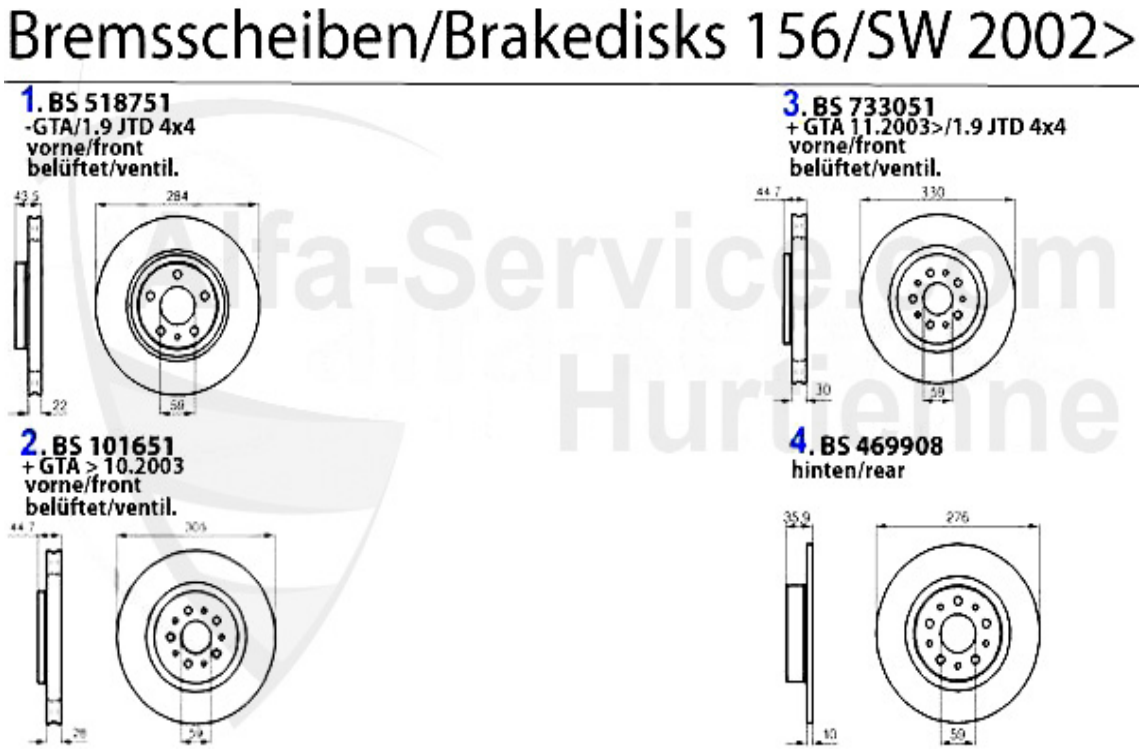

1	BS518751	OE. 71739568 FRONT BRAKE DISK 147, 156, 164, gtv/spider (916)	70.78 EUR
2	BS101651	FRONT BRAKE DISK 147/156 GTA GTV/SPIDER (916) 3.0/3.2 V6 24V	87.20 EUR
3	BS733051	OE.51733051 FRONT BRAKE DISC GTA 147 2003>,156 2002>	97.46 EUR
4	BS469908	OE. 46469908 REAR BRAKE DISC	78.99 EUR

156 > BRAKE > BRAKE PADS >2002

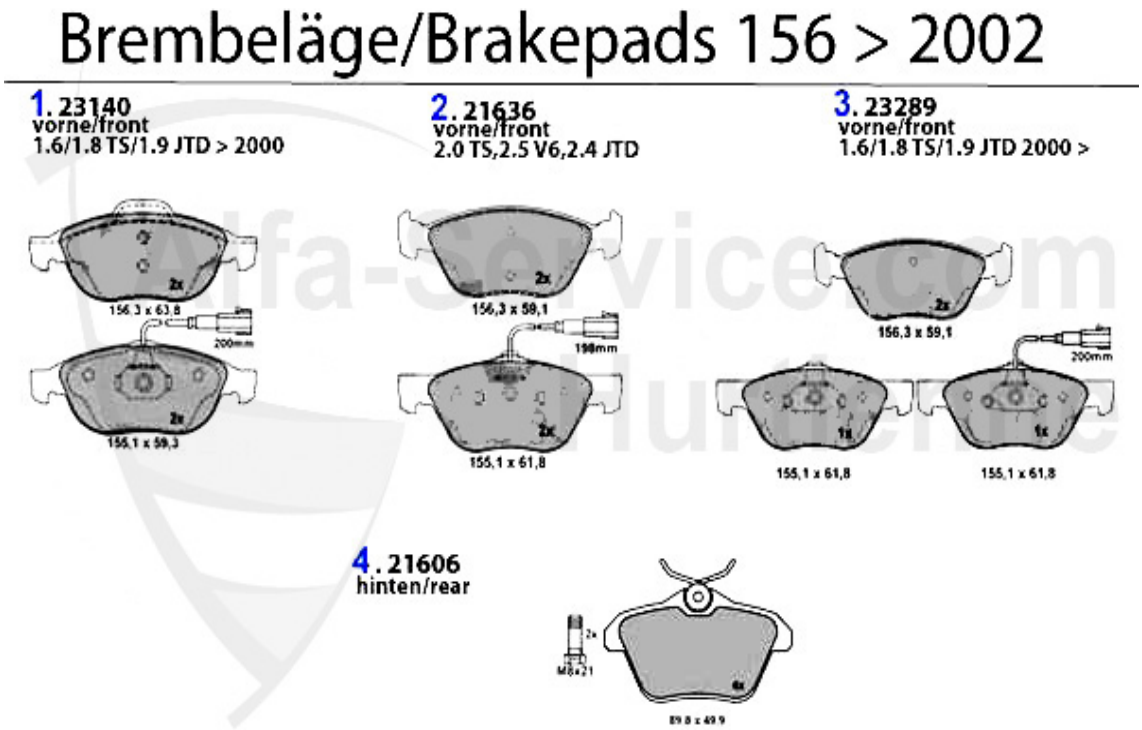

1	23140 193 05	BRAKE PADS FRONT WITH ABRASION CONTACT, 147 1.6 16V TS, 156 1.6/1.8/ 16V TS/1.9 JTD 09.97 -10.00, OE 9948887	63.96 EUR
2	21636 193 05	OE 77362222, BRAKE PADS WITH ABRASION CONTACT, 155 1.6/1.8/2.0 16V TS/2.5 V6 TD 05.96 >, 156 1.6 1.8/2.0/16V/TS/JTS/V6/1.9/2.4 JTD , GTV/S	60.52 EUR
3	23289 193 05	BRAKE PADS FRONT WITH WARNING CONTACT 145/6 1.8/2.0 16V TS/QV 01.97>, 147 1.6/ 2.0 16V TS BRAKESYSTEM ATE	69.76 EUR
4	21606 166 24	OE. 71712910 REAR BRAKE PADS WITHOUT ABRASION CONTACT, 156 1.6/1.8/2.0/16V/TS/JTS/2.5 V6 24V/1.9/2.4/JTD 164 3.0V6 Q4 02.94-09.98	62.58 EUR

156 > BRAKE > BRAKE PADS 2002>

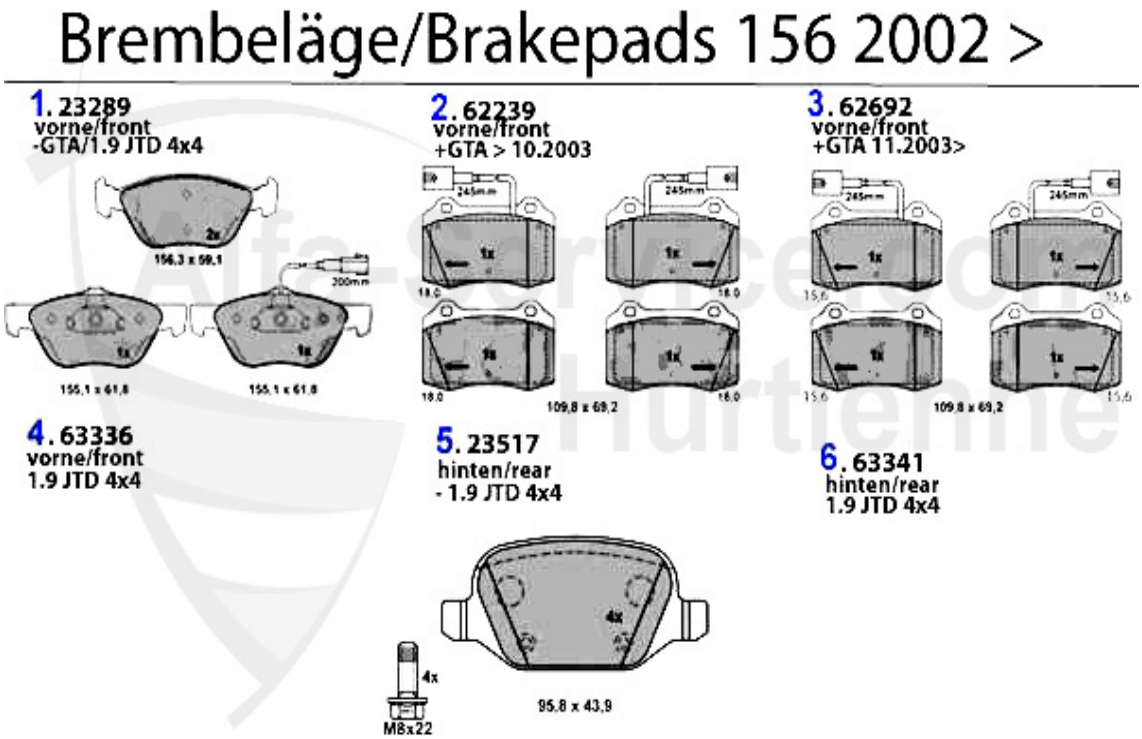

1	23289 193 05	BRAKE PADS FRONT WITH WARNING CONTACT 145/6 1.8/2.0 16V TS/QV 01.97>, 147 1.6/ 2.0 16V TS BRAKESYSTEM ATE	69.76 EUR
2	62239	OE. 77362239 BRAKE PAD-SET FRONT 147/156 GTA >10.2003	87.20 EUR
3	62692	OE. 77362692 BRAKE PAD-SET FRONT 147/156 GTA 10.2003>	93.87 EUR
4	63336	OE. 77363336 BRAKE PAD-SET 156/SW 1.9 JTD 4x4 FRONT	174.69 EUR
5	23517 165 04	BRAKE PADS REAR WITHOUT WARNING CONTACT 147 1.6/2.0/16V TS/1.9 JTD, 156 SPORTWAGON ALL	59.00 EUR
6	63341	OE. 77363341 BRAKE PAD-SET REAR 156/SW 1.9 JTD 4x4	76.95 EUR

156 > BRAKE > CALIPER >2002

1	BZ211041	OE. 9948124 BRAKE CALIPER FL 147 1.6 TS, 156 1.6/1.8 TS	214.40 EUR
2	BZ211042	OE. 9948129 BRAKE CALIPER FR 147 1.6 TS, 156 1.6/1.8 TS	214.40 EUR
3	BZ48466	OE. 9948466 BRAKE CALIPER FL 147, 156, Nuovo GT TS 16V, JTD	174.99 EUR
4	BZ48471	OE. 9948469 BRAKE CALIPER FR 147, 156, Nuovo GT TS 16V, JTD	174.99 EUR
5	BZ47885	OE. 9947885 BRAKE CALIPER RL 156 >02,166	193.89 EUR
6	BZ47896	OE. 9947896 BRAKE CALIPER RR 156 >02,166	193.89 EUR
7	RSBS4359	REPAIRKIT FOR ONE CALIPPER TYP ATE 53MM 145/6 1.4 16VTS,1.8 i.e 16V, 2.0 16V, 1.9JTD, 156 16V TS, 2.5 V6 +SW Models	19.90 EUR
7	RSBS4025	REPAIR KIT FOR CALIPPER ATE 53mm DIAM. (for one calipper) FITS FOR THE MODELS 145/6-(930) 1.4/1.6/1.8/2.0/ 16V/TS 1.9J/TD 94-01, 156+SW(932)1.9JTD 1.6/1.8/2.0/2.4JTD, 3.2GTA, 00-05	21.99 EUR

156 > BRAKE > CALIPER 2002> FRONT

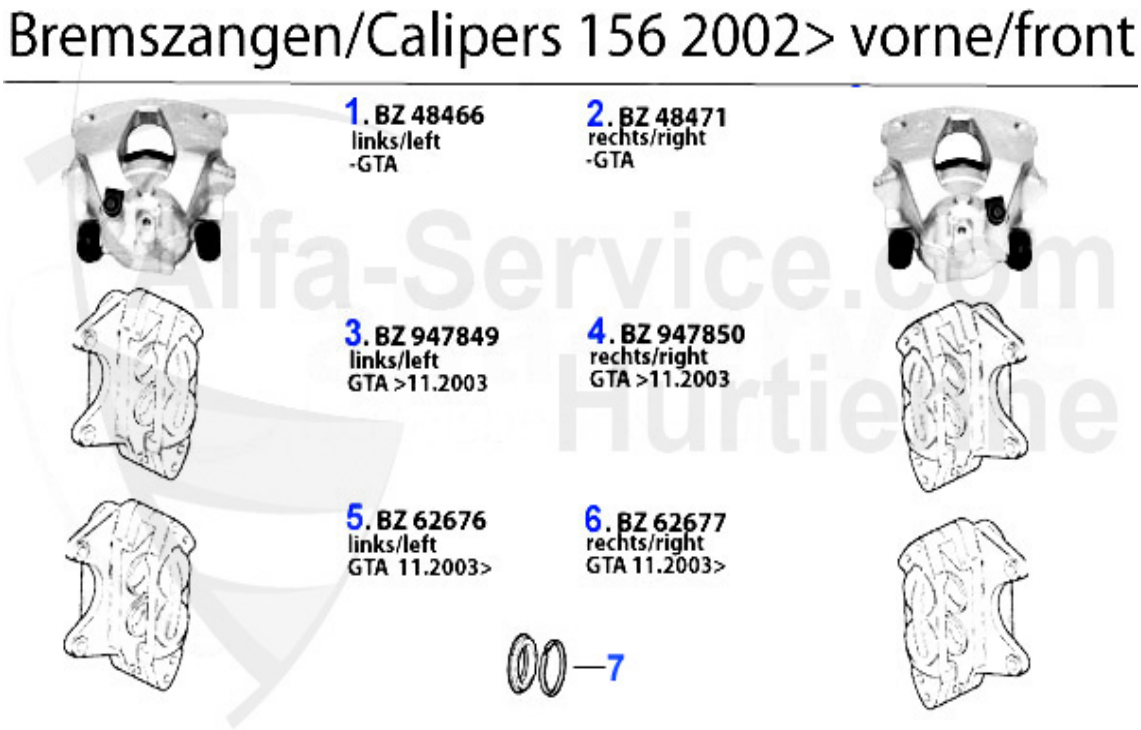

1	BZ48466	OE. 9948466 BRAKE CALIPER FL 147, 156, Nuovo GT TS 16V, JTD	174.99 EUR
2	BZ48471	OE. 9948469 BRAKE CALIPER FR 147, 156, Nuovo GT TS 16V, JTD	174.99 EUR
3	BZ947849	Frontbrake Callipper 147,156,916 3.2 V6	488.99 EUR
4	BZ947850	Frontbrake Callipper 147,156,916 3.2 V6	488.99 EUR
5	BZ62676	OE. 77362676 F.BRK.CAL.W/O PAD 147, 156 2002>, Nuovo GT 3.2 GTA	369.00 EUR
6	BZ62677	OE. 77362677 F.BRK.CAL.W/O PAD 147, 156 2002>, Nuovo GT 3.2 GTA	369.00 EUR
7	RSBS4359	REPAIRKIT FOR ONE CALIPPER TYP ATE 53MM 145/6 1.4 16VTS,1.8 i.e 16V, 2.0 16V, 1.9JTD, 156 16V TS, 2.5 V6 +SW Models	19.90 EUR
7	RSBS4025	REPAIR KIT FOR CALIPPER ATE 53mm DIAM. (for one calipper) FITS FOR THE MODELS 145/6-(930) 1.4/1.6/1.8/2.0/ 16V/TS 1.9J/TD 94-01, 156+SW(932)1.9JTD 1.6/1.8/2.0/2.4JTD, 3.2GTA, 00-05	21.99 EUR

156 > BRAKE > CALIPER 2002> REAR

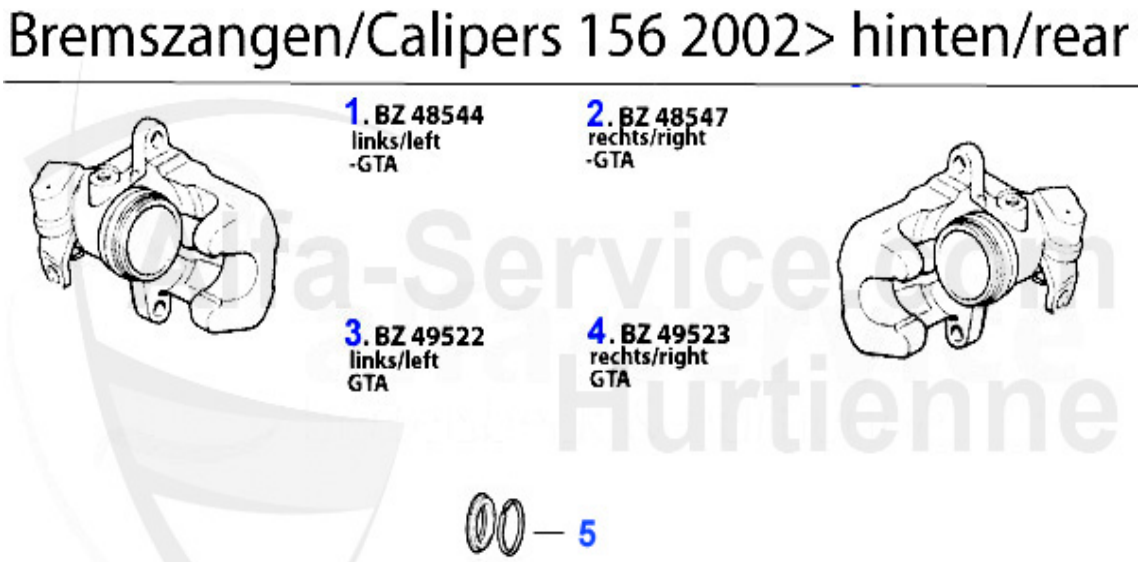

1	BZ48544	OE. 9951213/9948544 BRAKE CALIPPER REAR LEFT 147,156/SW 2002>,Nuovo GT ALL 4-CYLINDER	171.32 EUR
2	BZ48547	OE. 9951214/9948547 BRAKE CALIPPER REAR RIGHT 147,156/SW 2002>,Nuovo GT ALL 4-CYLINDER	171.32 EUR
3	BZ49522	OE. 9949522 BRAKE CALIPER RL 147, 156 2002>, Nuovo GT 3.2 GTA	214.40 EUR
4	BZ49523	OE. 9949523 BRAKE CALIPER RR 147, 156 2002>, Nuovo GT 3.2 GTA	214.40 EUR
5	RSBS356	Rep.-Satz Bremssattel hinten(Lukas) 147GTA/156GTA/156swGTA/GT1,8TS/ GT2,0JTS/GT3,2GTA/GT1,9JTD	21.99 EUR

156 > BRAKE > BRAKE SERVO/BRAKE MASTER CYL. >2002

BKV/Hauptbremszylinder/Brakeservo/Brake master cylinder 156 >2002

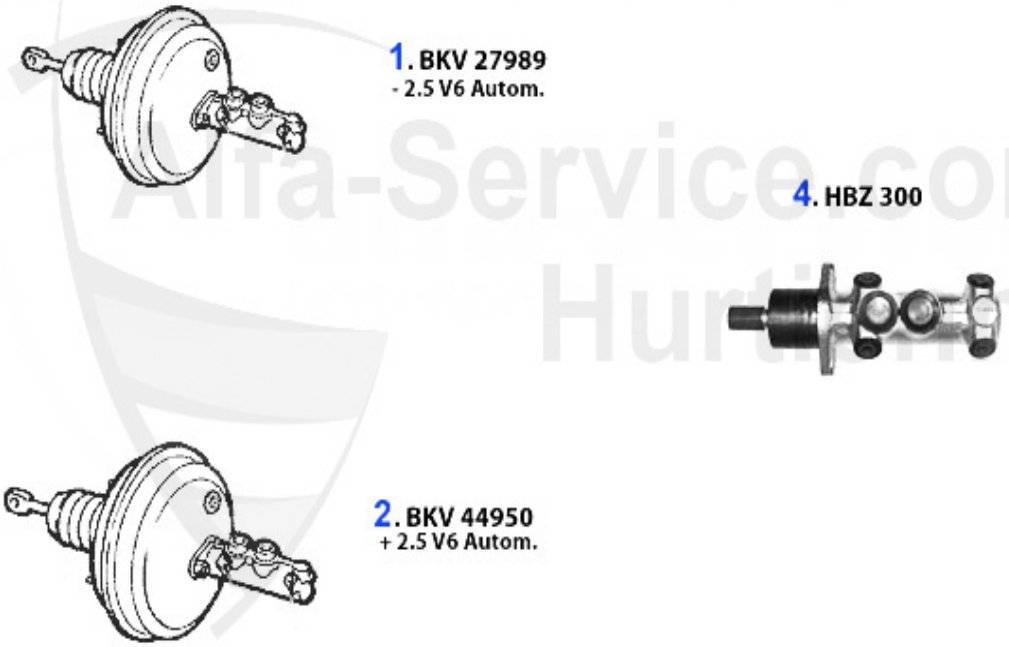

1	BKV27989	Bremskraftverstärker 156 1.6/1.8/2. .0 TS 16V/2.5 V6/1.9/2.4 JTD Bj. >0 2	430.86 EUR
1	BKV49654	Bremskraftverstärker 156 2.0 TS/JTS 16V Bj. 02> (nicht Selespeed) ACHTUNG: wird nur ohne HBZ geliefer t	481.41 EUR
2	BKV44950	Bremskraftverstärker 156 2.5 V6 Aut omatik Bj. >02	333.40 EUR
3	HBZ300	BRAKE MASTER CYLINDER 156	132.34 EUR

156 > BRAKE > BRAKE MASTER CYL. 2002>

Hauptbremszylinder/Brake Master Cylinder 156 2002>

1	HBZ9652	OE. 9949652 BRAKE MASTER CYLINDER 156 2002>	183.63 EUR

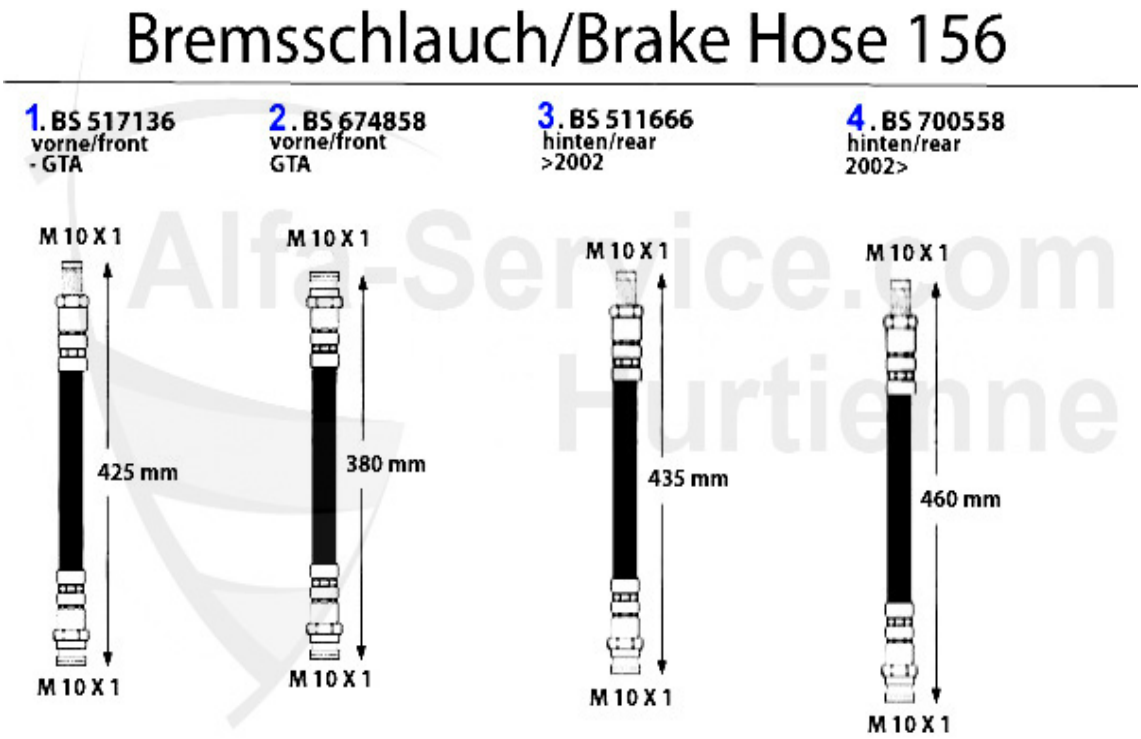

1	BS517136	FRONT BRAKE HOSE 145/6 1.4/1.6/3.0 V6 06.95>	16.31 EUR
2	BS674858	OE. 60674858 BRAKE HOSE fr. 147/Nuovo GT 3.2 GTA	14.82 EUR
3	BS511666	Bremsschlauch HA 147, 156 >2002	11.59 EUR
4	BS700558	OE. 51700558 REAR BRAKE HOSE 156 2002>, Nuovo GT	32.32 EUR

156 > BRAKE > BRAKE CABLE

Handbremsseil/Brake Cable 156/SW

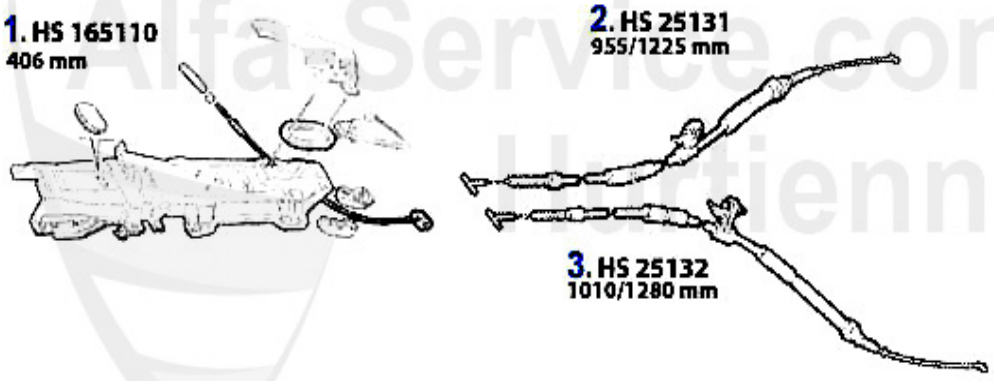

1	HS165110	HANDBRAKE CABLE FRONT 145/6,147,155, SPIDER/GTV (916),NUOVO GT HANDBRAKE CABLE FRONT 145/6,147,155, SPIDER/GTV (916),NUOVO GT	19.08 EUR
2	HS25131	HANDBRAKE CABLE RIGHT 156/NUOVO GT	33.89 EUR
3	HS25132	HANDBRAKE CABLE LEFT 156/NUOVO GT	33.89 EUR

156 > ELECTRIC > FUSE

1	FSI075	Flachsteck-Sicherung 7,5 A	0.20 EUR
2	FSI010	Flachsteck-Sicherung 10 A	0.20 EUR
3	FSI020	Flachsteck-Sicherung 20 A	0.20 EUR
4	FSI025	Flachsteck-Sicherung 25 A	0.20 EUR
5	FSI030	Flachsteck-Sicherung 30 A	0.20 EUR

156 > ELECTRIC > ENGINE ELECTRIC > IGNITION SYSTEM TS

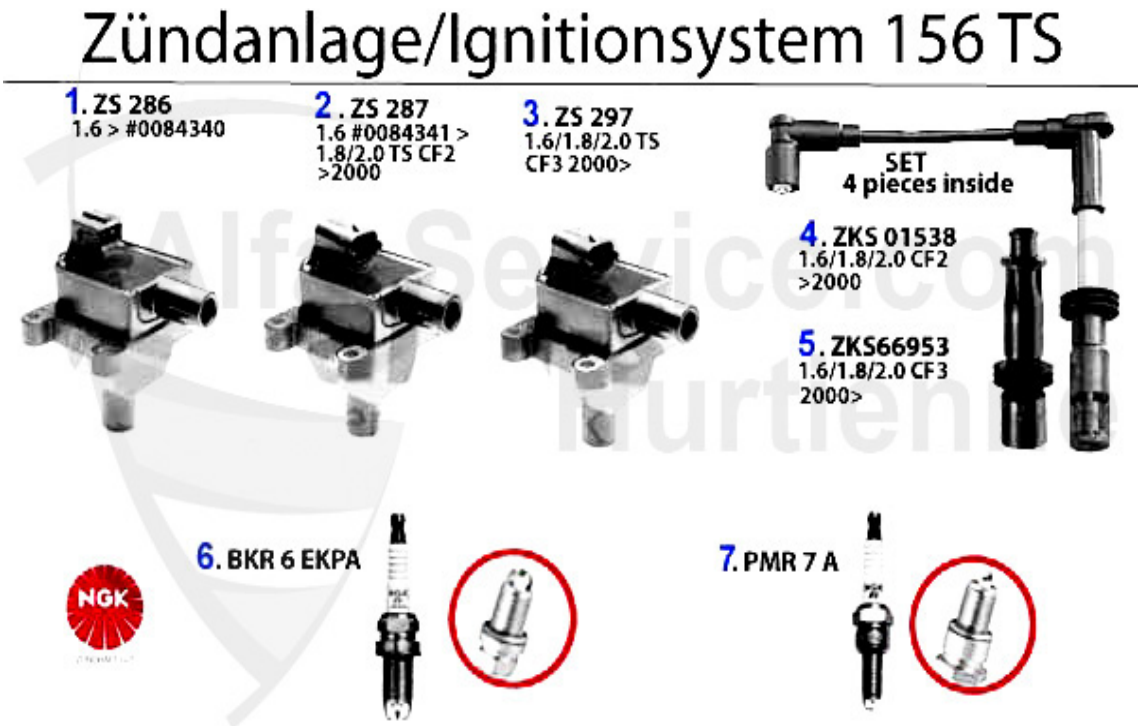

1	ZS286	IGNITION COIL 145/6,155,156,SPIDER/GTV (916) 1.6-2.0 TS 95>	67.00 EUR
2	ZS287	IGNITION COIL 145/6,155,156,166,GTV/ SPIDER (916) 1.4-2.0 TS 09.97>	65.00 EUR
3	ZS297	IGNITION COIL 147,166,GTV/SPIDER (916) CF 3	89.00 EUR
4	ZKS01538	Kabelsatz 145/6 1.4/1.6/1.8/2.0 ie 16V TS bj. 97>,155 1.6/1.8/2.0 ie 16V TS,gtv/spider 1.8/2.0 16V TS, 166 2.0 TS	163.11 EUR
5	ZKS66953	IGINITION CABLE SET 147, 156, 166, gtv/ spider (916), Nuovo GT - TS 16V CF3	132.20 EUR
6	BKR 6 EKPA	SPARK PLUG 3 X PLATINUM 145/6,147,155 156,166 GTV/SPIDER(916)ALL 4-CYL. TS JTS YEAR 95>IMPORTANT: 2 SPARKS EACH CYL. 1X BKR 6 EKPA/1X PMR 7 A	24.57 EUR
7	PMR 7 A	Zündkerze NGK Idrium Langzeitkerze 145/6,147,155,156,166,gtv/spider (9 16) alle 4-Zylinder TS/JTS Bj. 95> ACHTUNG: benötigt werden 2 Kerzen j e Zylinder je 1x PMR 7 A/BKR 6 EKPA	24.99 EUR

156 > ELECTRIC > ENGINE ELECTRIC > IGNITION SYSTEM V6

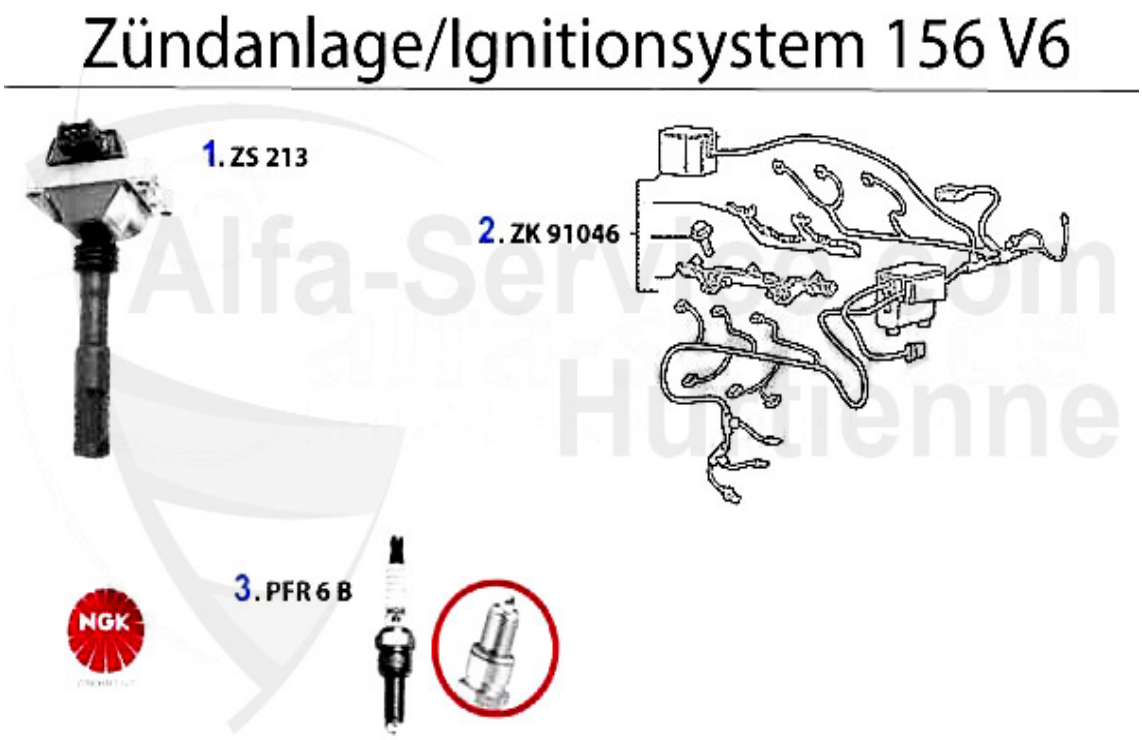

1	ZS213	OE. 60562701 IGNITION COIL 156,164, 166.spider/gtv(916) 2.5/3.0 V6 24V 94-00	102.90 EUR
3	PFR 6 B	Zündkerze NGK 33 1.7 ie 16V,145/6 1 .7 ie 16V,147 3.2 GTA,156 2.5 V6 24 V/3.2 GTA,164 Super 3.0 V6 24V,166 2.5/3.0 V6 24V,gtv/spider (916) 3.0 V6 24V/3.2 V6	30.68 EUR

156 > ELECTRIC > ENGINE ELECTRIC > AGGREGATS TS

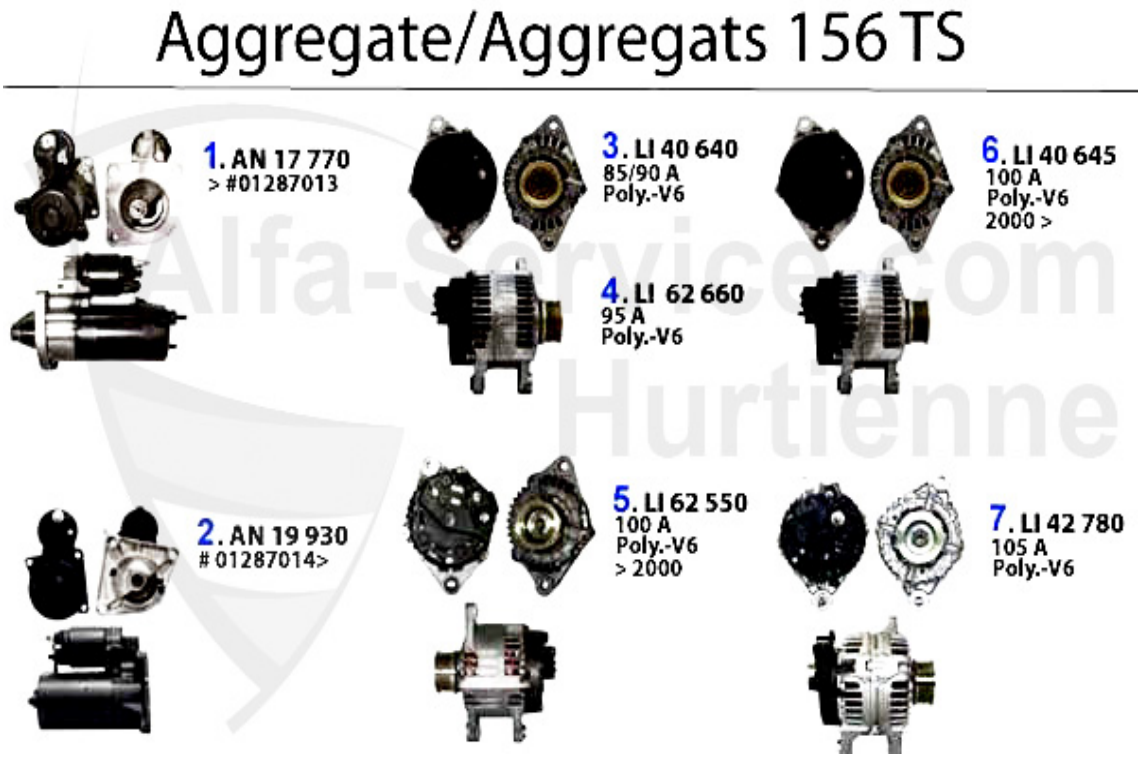

1	AN17770	Anlasser 145 1.7ie 16V/2.0 16V QV bj. 03.98>, 147 1.6/2.0 16V TS 156,gtv/spider (916) 2.0 TS bj. 98>	174.99 EUR
2	AN19930	OE. 55193406 STARTER MOTOR TS 16V/JTS 156 # 1287014>	234.92 EUR
3	LI40640	ALTERNATOR 145/6 1.4-2.0 ie 16V 96-01, 155 1.6 16V,156 1.8 16V/2.4 JTD 10V	216.46 EUR
4	LI62660	ALTERNATOR 145/6,155,156,GTV/SPIDER (916) 2.0 TS	276.98 EUR
5	LI62550	ALTERNATOR 155 1.6/1.7/1.8 TS 16V (WITH AC) 96>	204.14 EUR
7	LI42780	Lichtmaschine 145/6 1.7 ie 16V Bj. 98-01,147 (mit Klima),156 (mit Klim a) Bj. 10.00> 166, gtv/spider (916)	318.02 EUR

156 > ELECTRIC > ENGINE ELECTRIC > AGGREGATS JTS

Aggregate/Aggregats 156 JTS

1. AN 19 930

2. LI 82 219

Alfa-Service.com Hungarne

1	AN19930	OE. 55193406 STARTER MOTOR TS 16V/JTS 156 # 1287014>	234.92 EUR
2	LI82219	OE. 46782219 ALTERNATOR 2.0 TS 16V/JTS 2002>	286.22 EUR

Aggregate/Aggregats 156 V6 24V

2	LI41280	ALTERNATOR, 156,166 GTV/SPIDER(916) 6 CYL.-EXCHANGE PART,PLEDGE EUR 64,66	383.16 EUR
3	LI73305	OE. 60673305 ALTERNATOR 3.2 V6 24V - GTA	399.05 EUR

Aggregate/Aggregats 156 1.9 JTD 8V

1. AN 17 790

2. LI 68 170
100 A

3. LI 89 068
120 A

Alfa-Service.com Hurricane

1	AN17790	STARTER 145/6,147,156 1.9 TD/JTD	219.53 EUR
2	LI68170	OE. 60816045 GENERATOR 145/6 1.9 JTD 100 A	330.33 EUR
3	LI89068	OE. 46809068 ALTERNATOR 1.9 JTD 16V 147	406.24 EUR

156 > ELECTRIC > ENGINE ELECTRIC > AGGREGATS 1.9 JTD 16V

Aggregate/Aggregats 156 1.9 JTD 16V

1. AN 80 159

2. LI 89 068

Alfa-Service.com Hurtenne

1	AN80159	OE. 46800159 STARTER MOTOR 1.9 JTD 16V 147	265.70 EUR
2	LI89068	OE. 46809068 ALTERNATOR 1.9 JTD 16V 147	406.24 EUR

156 > ELECTRIC > ENGINE ELECTRIC > AGGREGATS 2.4 JTD 10V

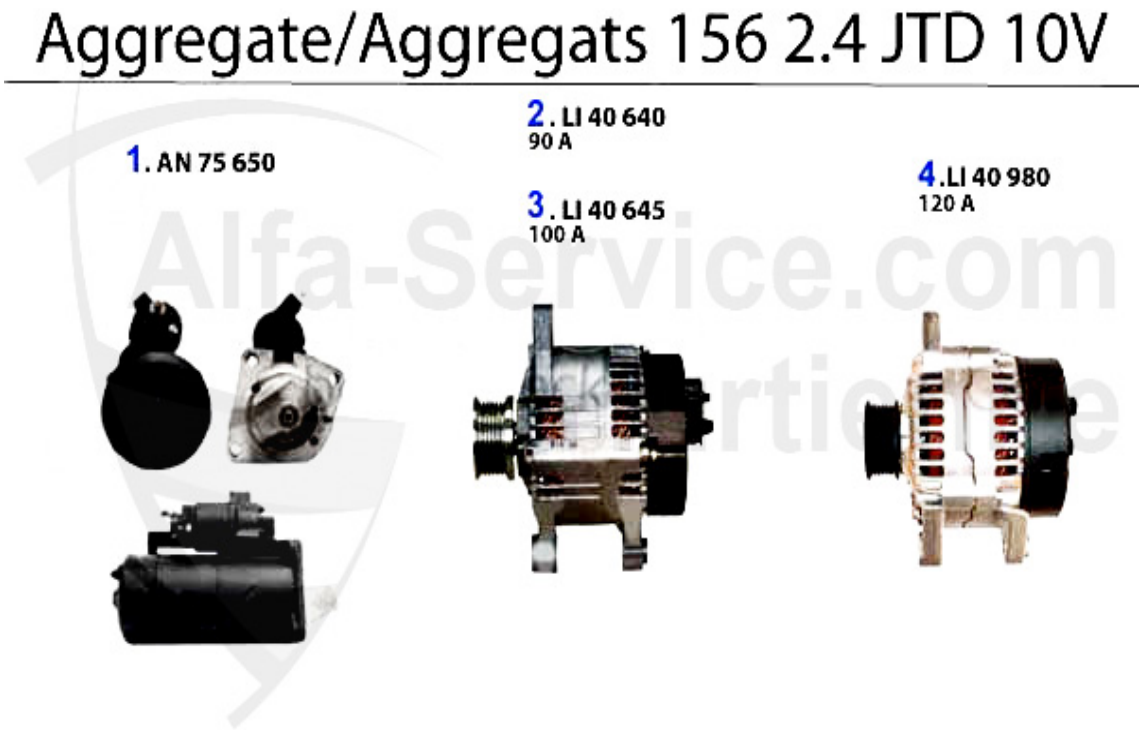

1	AN75650	STARTER 156,166 2.4 JTD	251.34 EUR
2	LI40640	ALTERNATOR 145/6 1.4-2.0 ie 16V 96-01, 155 1.6 16V,156 1.8 16V/2.4 JTD 10V	216.46 EUR
3	LI40645	ALTERNATOR 145/6 (WITH AC),155/6 1.6/ 1.8 16V TS (WITH AC)	287.24 EUR
4	LI40980	ALTERNATOR 156 2.4 JTD (WITH AC)	378.54 EUR

156 > ELECTRIC > ENGINE ELECTRIC > AGGREGATS 2.4 JTD 20V

Aggregate/Aggregats 156 2.4 JTD 20V

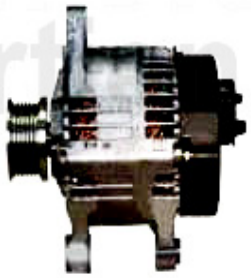

Alfa-Service.com
Hurlevent

1	AN80159	OE. 46800159 STARTER MOTOR 1.9 JTD 16V 147	265.70 EUR
2	LI89068	OE. 46809068 ALTERNATOR 1.9 JTD 16V 147	406.24 EUR