CarManuals2.com

Contents
A to Z

Owner's Manual for the vehicle.
With a quick reference guide for your convenience.

Online Edition for Part No. 01 41 0 004 597 - © 08/99 BMW AG

CarManuals2.com

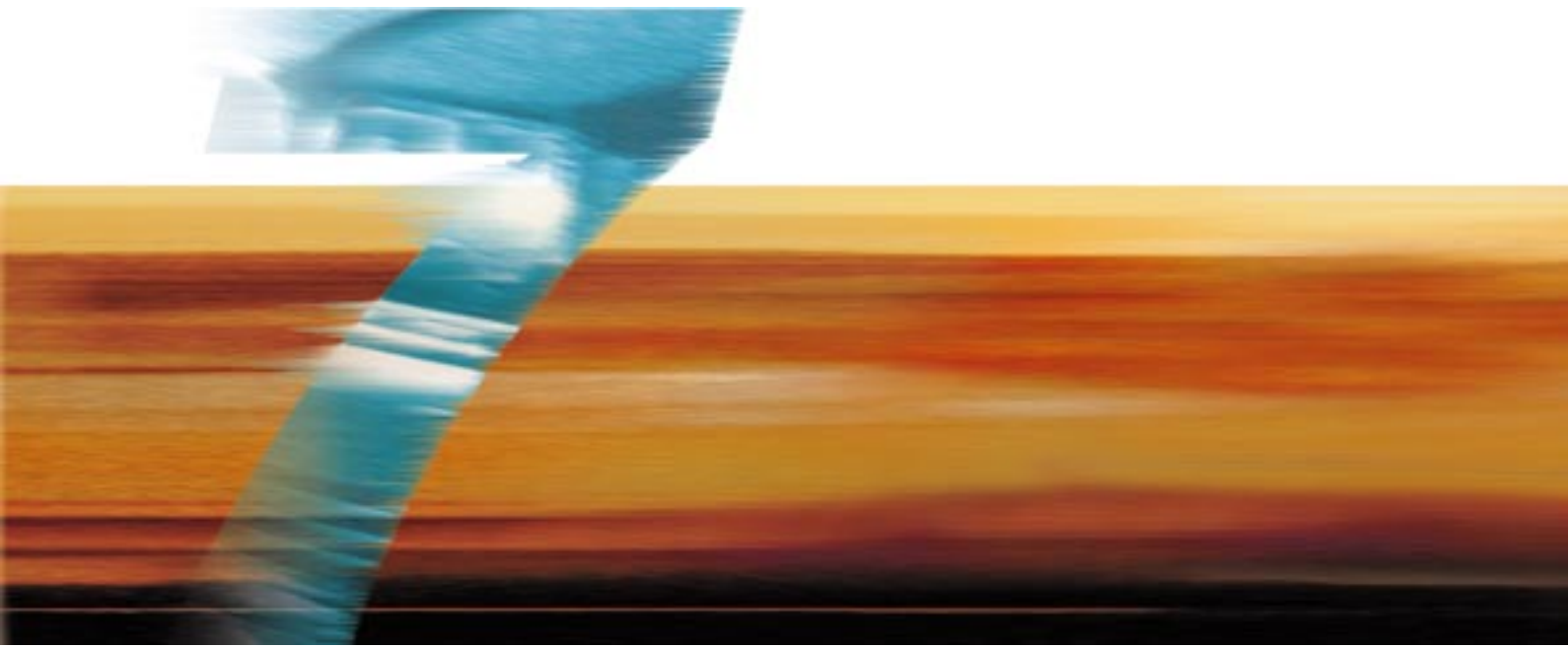

Online Edition for Part No. 01 41 0 004 597 - © 08/99 BMW AG

CarManuals2.com

740i
740iL
750iL

Online Edition for Part No. 01 41 0 004 597 - © 08/99 BMW AG

CarManuals2.com

CarManuals2.com

Congratulations, and thank you for choosing a BMW.

Thorough familiarity with your vehicle will provide you with enhanced control and security when you drive it. We therefore have this request:

Please take the time to read this Owner's Manual and familiarize yourself with the information that we have compiled for you before starting off in your new car. It contains important data and instructions intended to assist you in gaining maximum use and satisfaction from the unique range of technical features on your BMW. The manual also contains information on care and maintenance designed to enhance operating safety and contribute to maintaining the value of your BMW throughout an extended service life.

This Owner's Manual should be considered a permanent part of this vehicle. It should stay with the vehicle when sold to provide the next owner with important operating, safety and maintenance information.

This manual is supplemented by a Service and Warranty Information Booklet (US models) or a Warranty and Service Guide Booklet (Canadian models). We recommend that you read this publication thoroughly.

Your BMW is covered by the following warranties:

- New Vehicle Limited Warranty
- Limited Warranty Rust Perforation
- Federal Emissions System Defect Warranty
- Federal Emissions Performance Warranty
- California Emission Control System Limited Warranty

Detailed information about these warranties is listed in the Service and Warranty Information Booklet (US models) or in the Warranty and Service Guide Booklet (Canadian models).

We wish you an enjoyable driving experience.

BMW AG

Notes on the Owner's Manual

We have made every effort to ensure that you are able to find what you need in this Owner's Manual as quickly as possible. The fastest way to find certain topics is by using the detailed index at the end. If you desire an initial overview of your vehicle, this can be found in the first chapter. The detailed list of contents that directly follows the summary of contents is intended to stimulate your curiosity regarding your BMW and to encourage you to read the manual.

Should you wish to sell your BMW at some time in the future, please remember to hand over the Owner's Manual to the new owner; it is part of the vehicle.

If you have any additional questions, your BMW center will be glad to advise you.

Symbols used

These sections contain vital information – please read the accompanying text passages carefully, both for your own safety and to prevent damage to your BMW.◀

These passages contain information on special and unique features of your vehicle.◀

Indicates special information on recycling.◀

◀ Indicates the end of a note.

* Indicates special equipment, country-specific equipment and optional extras.

Alerts you to functions which can be adjusted by your authorized BMW center ("Car Memory" or "Key Memory"). Refer to page 55.◀

The individual vehicle

On buying your BMW, you have decided in favor of a model with individualized equipment and features. This Owner's Manual describes all models and equipment that BMW offers within the same group.

We hope you will understand that equipment and features are included which you might not have chosen for your vehicle. Any differences can easily be identified, since all optional accessories and special equipment are marked with an asterisk *.

If your BMW features equipment which is not described in this Owner's Manual (car radio or telephone, for instance), Supplementary Owner's Manuals are enclosed. We ask you to read these manuals as well.

© 1999 BMW AG
Munich, Germany
Reprinting, including excerpts, only with the written consent of BMW AG, Munich.
Part number 01 41 0 004 597
US English VIII/99
Printed in Germany
Printed on environmentally friendly paper (bleached without chlorine, suitable for recycling).

CarManuals2.com

Status at time of printing

BMW pursues a policy of continuous, ongoing development that is conceived to ensure that our vehicles continue to embody the highest quality and safety standards combined with advanced, state-of-the-art technology. For this reason, it is possible that the features described in this Owner's Manual could differ from those on your vehicle. Nor can errors and omissions be entirely ruled out. You are therefore asked to appreciate that no legal claims can be entertained on the basis of the data, illustrations or descriptions in this manual.

CarManuals2.com

For your own safety

Use unleaded gasoline only. Fuels containing up to 10% ethanol or other oxygenates with up to 2.8% oxygen by weight (i.e., 15% MTBE or 3% methanol plus an equivalent amount of co-solvent) will not void the applicable warranties with respect to defects in materials or workmanship. Field experience has indicated significant differences in fuel quality (i.e., volatility, composition, additives, etc.) among gasolines offered for sale in the United States and Canada. The use of poor-quality fuels may result in driveability, starting and stalling problems, especially under certain environmental conditions, such as high ambient temperature and high altitude.
Should you encounter driveability problems that you suspect could be related to the fuel you are using, we recommend that you respond by switching to a recognized high-quality brand.
Failure to comply with these recommendations may result in unscheduled maintenance.
Follow the relevant safety rules when you are handling gasoline.◀

Important safety information!
For your own safety, use genuine parts and accessories approved by BMW.

When you purchase accessories tested and approved by BMW and Original BMW Parts, you simultaneously acquire the assurance that they have been thoroughly tested by BMW to ensure optimum performance when installed on your vehicle.

BMW warrants these parts to be free from defects in material and workmanship.

BMW will not accept any liability for damage resulting from installation of parts and accessories not approved by BMW.

CarManuals2.com

BMW cannot test every product from other manufacturers to verify if it can be used on a BMW safely and without risk to either the vehicle, its operation, or its occupants.

Original BMW Parts, BMW Accessories and other products approved by BMW, together with professional advice on using these items, are available from all BMW centers.

Installation and operation of non-BMW approved accessories such as alarms, radios, amplifiers, radar detectors, wheels, suspension components, brake dust shields, telephones (including operation of any portable cellular phone from within the vehicle without using an externally-mounted antenna) or transceiver equipment (C.B., walkie-talkie, ham radio, for instance) may cause extensive damage to the vehicle, compromise its safety, interfere with the vehicle's electrical system, or affect the validity of the BMW Limited Warranty. See your authorized BMW center for additional information.◀

Maintenance, replacement, or repair of the emission control devices and systems may be performed by any automotive repair establishment or individual using any certified automotive part.◀

Symbol on vehicle parts

Indicates that you should consult the relevant section of this Owner's Manual for information on a particular part or assembly.

The following only applies to vehicles owned and operated in the US.

REPORTING SAFETY DEFECTS

If you believe that your vehicle has a defect which could cause a crash or could cause injury or death, you should immediately inform the National Highway Traffic Safety Administration (NHTSA) in addition to notifying BMW of North America, Inc., P.O. Box 1227, Westwood, New Jersey 07675-1227, Telephone (201) 307-4000.

If NHTSA receives similar complaints, it may open an investigation, and if it finds that a safety defect exists in a group of vehicles, it may order a recall and remedy campaign. However, NHTSA cannot become involved in individual problems between you, your dealer, or BMW of North America, Inc.

CarManuals2.com

To contact NHTSA, you may either call the Auto Safety Hotline toll-free at 1-800-424-9393 (or 366-0123 in Washington, D.C. area) or write to: NHTSA, U.S. Department of Transportation, Washington, D.C. 20590. You can also obtain other information about motor vehicle safety from the Hotline.

CarManuals2.com

CarManuals2.com

Overview

Controls and features

Operation, care and maintenance

Owner service procedures

Advanced technology

Technical Data

Index

Contents

Overview

Cockpit 16
Instrument cluster 18
Indicator and warning lamps 20
Multifunction steering wheel (MFL) 23
Hazard warning flashers 25
Warning triangle 25
First-aid kit 25
Refueling 26
Fuel specifications 27
Tire inflation pressure 28

Controls and features

Locks and security systems:
Keys 32
Electronic vehicle immobilizer 33
Central locking system 34
Opening and closing – from the outside 34
Using the key 34
Using the remote control 35
Opening and closing – from the inside 38
Luggage compartment lid 39
Luggage compartment 41
Alarm system 42
Electric power windows 44
Security glass 45
Sliding/Tilt sunroof 46

Adjustments:
Seats 48
Steering wheel 51
Mirrors 52
Seat, mirror and steering wheel memory 53
Car Memory, Key Memory 55

Passenger safety systems:
Safety belts 56
Airbags 57
Child restraints 60
Child restraint installation 62
Child safety locks 62

Driving:
Steering/Ignition lock 63
Starting the engine 64
Switching off the engine 65
Parking brake 65
Automatic transmission 66
Automatic transmission with Steptronic 69
Indicator/Headlamp flasher 71
Washer/Wiper system/ Rain sensor 72
Rear window defroster 74
Cruise control 74

Everything under control:
Odometer, outside temperature display 76
Tachometer 76
Energy control 77
Fuel gauge 77
Temperature gauge 78
Service Interval Display 78
Check Control 79
Multi-Information Display (MID) 82
Digital clock 83
Onboard computer 88

CarManuals2.com

Controls and features

Technology for safety and convenience:
Park Distance Control (PDC) 94
Automatic Stability Control plus Traction (ASC+T)/Dynamic Stability Control (DSC) 96
Electronic Damper Control (EDC) 97
Tire Pressure Control (RDC) 98

Lamps:
Parking lamps/Low beams 100
Instrument panel lighting 100
High beams/Parking lamps 101
Fog lamps 101
Interior lamps 102
Reading lamps 102

Controlling the climate for pleasant driving:
Automatic climate control 104
Rear passenger-area air conditioning 109
Seat heating 110
Steering wheel heating 110
Roller sun blinds 111
Independent ventilation system 111

Operation, care and maintenance

Cabin convenience:
Integrated Universal Remote Control 112
Glove compartment 115
Center armrests 115
Additional storage areas 117
Cup holders 117
Cellular phone 117
Ashtray 118
Cigarette lighter 119
Rear footrests 119

Loading and transporting cargo:
Ski bag 120
Cargo loading 122
Roof-mounted luggage rack 122

Special operating instructions:
Break-in procedure 126
Driving notes 127
Catalytic converter 128
Antilock Brake System (ABS) 129
Disc brakes 130
Brake system 132
Winter operation 132
Power steering 134
Level control system 134
Cellular phone 135
Radio reception 135

Wheels and tires:
Tire inflation pressure 136
Tire condition 136
Tire replacement 137
Tire rotation 137
Wheel and tire combinations 139
Winter tires 140
Snow chains 141
Approved wheel and tire specifications 142

CarManuals2.com

Contents

Operation, care and maintenance

Under the hood:
Hood 143
Engine compartment 144
Washer fluids 148
Washer nozzles 148
Engine oil 149
Coolant 151
Brake fluid 152
Vehicle Identification Number 153

Care and maintenance:
The BMW Maintenance System 154
Caring for your car 155
Airbags 161
Vehicle storage 161

Laws and regulations:
Technical modifications to the vehicle 162
OBD connector 163

Owner service procedures

CarManuals2.com

Replacement procedures:
Onboard tool kit 166
Windshield wiper blades 166
Lamps and bulbs 167
Changing tires 173
Battery 176
Fuses 180

In case of electrical malfunction:
Fuel filler door 182
Sliding/Tilt sunroof 182

Assistance, giving and receiving:
Jump-starting 183
Towing the vehicle 184

Advanced technology

Airbags 188
Adaptive Transmission Control (ATC) 188
Automatic Stability Control plus Traction (ASC+T)/Dynamic Stability Control (DSC) 189
Radio reception 190
BMW active seat 190
Safety belt tensioner 191
DSP sound system 191
Interior rearview mirror with automatic dimming feature 192
Rain sensor 192
Tire Pressure Control (RDC) 193
Xenon lamps 194

Online Edition for Part No. 01 41 0 004 597 - © 08/99 BMW AG

Technical data

Engine specifications 198
Dimensions 199
Weights 200
Capacities 201
Electrical system 202
Drive belts 202

Index

Everything from A to Z 206
Owner service procedures 212

CarManuals2.com

CarManuals2.com

Online Edition for Part No. 01 41 0 004 597 - © 08/99 BMW AG

Overview

Cockpit 16
Instrument cluster 18
Indicator and warning lamps 20
Multifunction steering wheel (MFL) 23
Hazard warning flashers 25
Warning triangle 25
First-aid kit 25
Refueling 26
Fuel specifications 27
Tire inflation pressure 28

CarManuals2.com

Controls and features

Operation, care and maintenance

Owner service procedures

Advanced technology

Technical Data

Index

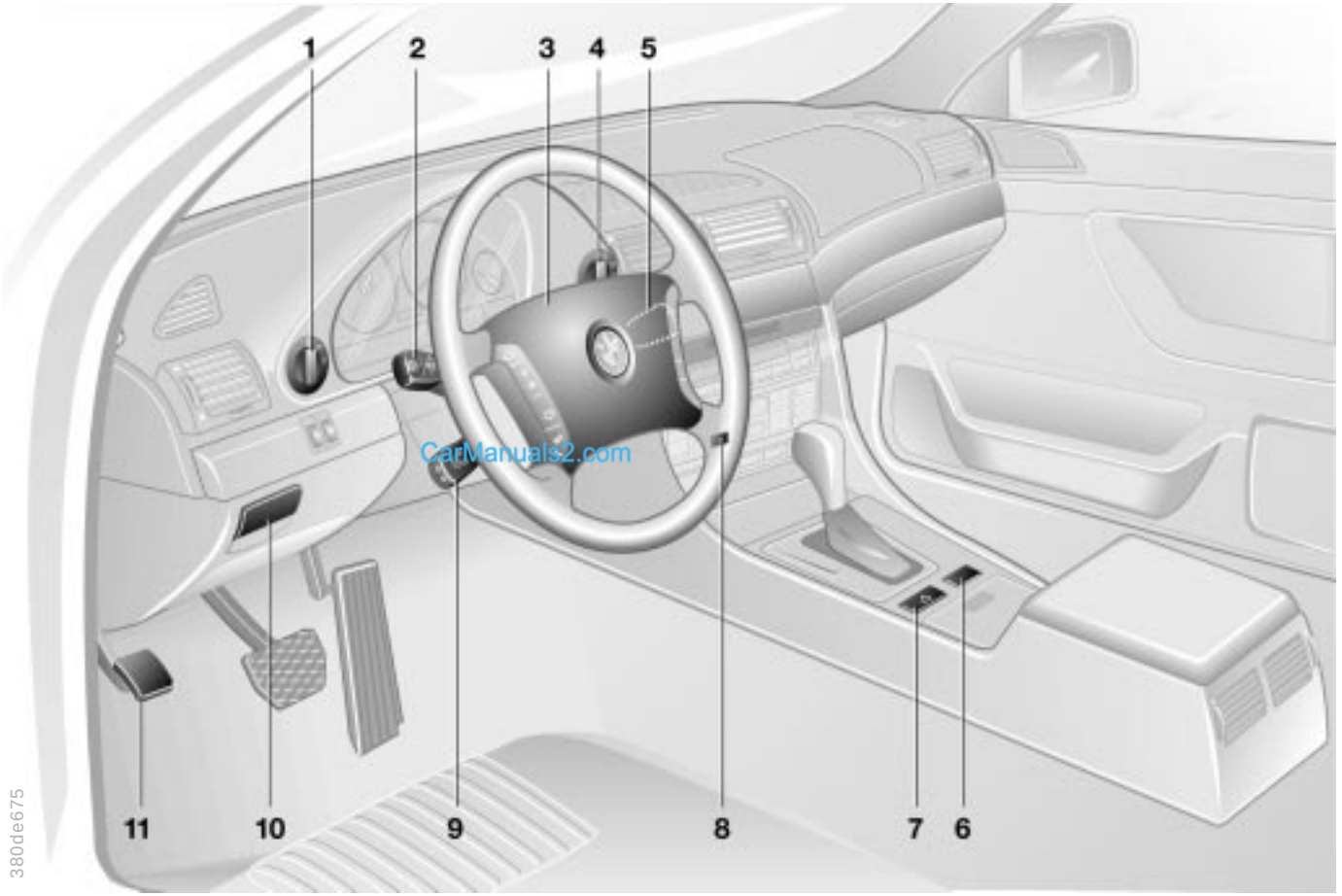

CarManuals2.com

Online Edition for Part No. 01 41 0 004 597 - © 08/99 BMW AG

Cockpit

1 Parking lamps/Low beams 100

2 ▷ Turn signal 71
▷ Parking lamp 101
▷ High beams 101
▷ Headlamp flasher 71
▷ Onboard computer 88

3 Horn: The entire surface

4 Fog lamps 101

5 Wiper/Washer lever 72

6 Central locking system 34

7 Hazard warning system 25

8 Rear window defroster 74

9 Electric steering wheel adjustment 51

10 Parking brake release handle 65

11 Parking brake pedal 65

CarManuals2.com

Instrument cluster

CarManuals2.com

380us702

Online Edition for Part No. 01 41 0 004 597 - © 08/99 BMW AG

Instrument cluster

1 Fuel gauge with lamp for fuel reserve range 77

2 Turn signal indicators 22

3 Speedometer

4 Indicator lamp for high beams 22

5 Tachometer and Energy Control 76, 77

6 Engine coolant temperature gauge 78

7 Indicator and warning lamps for
- ▷ Parking brake 21
- ▷ Hydraulic brake system/Dynamic Brake Control (DBC)* 20, 21
- ▷ Antilock Brake System (ABS) 21
- ▷ Airbag 21
- ▷ Please fasten safety belts 21
- ▷ Cruise control 22

8 CHECK button 79

9 Selection lever and program display for automatic transmission 66

10 Outside temperature display 76

CarManuals2.com

11 Indicator lamp for Automatic Stability Control plus Traction (ASC+T)/Dynamic Stability Control (DSC) 21

12 Trip odometer 76

13 Check Control display 79

14 Odometer 76

15 Service Interval Display 78, 154

16 Trip odometer reset to zero 76

17 Indicator and warning lamps (clockwise) for
- ▷ Fog lamps 22
- ▷ Battery charge current 20
- ▷ Engine oil pressure 20
- ▷ Service Engine Soon 21

You can display the outside temperature and distance driven in different units of measurement.◀

Indicator and warning lamps

Technology that monitors itself

Many of the systems of your BMW monitor themselves automatically, both during engine starts and while you are driving. Indicator and warning lamps that are identified by "●" are tested for proper functioning whenever the ignition key is turned. They each light up once for different periods of time.

If a fault should occur in one of these systems, the corresponding lamp does not go out after the engine is started or it lights up while the vehicle is moving. You will see how to react to this below.

Red: Stop immediately

Battery charge current ●
The battery is no longer being charged. There is a malfunction of the alternator V-belt or in the charging circuit of the alternator. Please contact the nearest BMW center.

If the V-belt is defective, do not continue driving. If you do so, the engine could be damaged due to overheating. If the V-belt is defective, increased steering effort is also required.◀

Engine oil pressure ●
Comes on while the engine is running and the "Stop! ENGINE OILPRESS" message appears in the Check Control:
Stop vehicle and switch off the engine. Check the engine level; top up as required. If oil level is correct: Please contact the nearest BMW center.

CarManuals2.com

Do not continue driving. The engine could be damaged because of inadequate lubrication.◀

BRAKE

Brake hydraulic system ●
The brake fluid level is too low. Before driving further, be sure to read the notes on pages 132 and 152. Also comes on with the message "CHECK BRAKE PADS" in the Check Control.

Brake hydraulic system warning lamp for Canadian models.

Red: An important reminder

PARK BRAKE Parking brake
Comes on when you engage the parking brake.
For additional information: Refer to page 65.

Parking brake warning lamp for Canadian models.

Please fasten safety belts* ●
An acoustic signal and message in the Check Control for 4 to 8 seconds. The acoustic signal ends after the safety belts are fastened.
For additional information on safety belts: Refer to page 56.

Airbags ●
Please have the system checked by your authorized BMW center as soon as possible.
For additional information: Refer to page 57.

Yellow: Check as soon as possible

BRAKE Dynamic Brake Control (DBC)* ●
Fault in the DBC System. Conventional braking efficiency is available without limitations.
For additional information: Refer to page 131.

Dynamic Brake Control (DBC)*
Warning lamp for Canadian models.

ABS Antilock Brake System (ABS) ●
The ABS system has been deactivated because of a system fault. Conventional braking efficiency is available without limitations. Please have the system inspected by your BMW center.
For additional information: Refer to page 129.

ABS warning lamp for Canadian models.

Automatic Stability Control plus Traction (ASC+T)/Dynamic Stability Control (DSC) ●
The ASC+T/DSC has been switched off or has been deactivated because of a malfunction. In the event of a malfunction, have the system checked by your BMW center. For additional information: Refer to page 96.

SERVICE ENGINE SOON Service Engine Soon ●
If the indicator lights up, either continuously or intermittently, this indicates a fault in the emissions-related electronic systems. Although the vehicle remains operational, you should have the systems checked by your BMW center at the earliest possible opportunity.
For additional information: Refer to OBD connector on page 163.

"Service Engine Soon" warning lamp for Canadian models.

CarManuals2.com

Green: For your information

Turn signal
Flashes when the turn signal is in operation. Rapid flashing indicates a system malfunction.
For additional information: Refer to page 71.

Cruise control
Lights up when the cruise control is activated. Available for operation via the multi-function steering wheel.
For additional information: Refer to page 74.

Fog lamps
Lights up whenever you switch on the fog lamps.
For additional information: Refer to page 101.

Blue: For your information

CarManuals2.com

High beams
Lights up when the high beams are on or the headlamp flasher is actuated.
For additional information: Refer to page 71.

Multifunction steering wheel (MFL)

There are two design versions, depending on the equipment installed in your vehicle.

The controls integrated in the multifunction steering wheel are provided so that you can operate a number of accessories quickly and without being distracted from traffic conditions. You may operate:

- Some of the functions of the radio, the CD and cassette modes
- The recirculated air mode of the air conditioner or
- the steering wheel heating
- The cruise control
- Selected cellular phone functions and
- the voice control

In order to operate a system via the MFL, the corresponding system controls must be switched on.◀

The illustration shows the maximum possible number of controls, corresponding to a full range of optional equipment. Refer to the individual Owner's Manuals for more detailed descriptions of the equipment.

1 Press briefly:
Receive an incoming phone call, initiate dialing and end a call.
Press and hold:
Activate and deactivate the voice control

2 Radio/Telephone: Selection

3 Radio/Telephone: Search backward or station keys or scroll in the phone book.
Fast forward and reverse for CD and cassette modes

4 Radio/Telephone: Volume

5 Radio/Telephone: Search forward or station keys or scroll in the phone book.
Fast forward and reverse for CD and cassette modes

6 Horn: The entire surface

7 Cruise control: Activate stored setting (resume)

8 Cruise control: Store and accelerate (+); decelerate and store (–)

9 Cruise control: Activate/Interrupt/Deactivate

10 Recirculated-air mode and AUC or steering wheel heating: Switch on and off

CarManuals2.com

Multifunction steering wheel (MFL)*

There are two design versions, depending on the equipment installed in your vehicle.

The controls integrated in the multifunction steering wheel are provided so that you can operate a number of accessories quickly and without being distracted from traffic conditions. You may operate:

- ▷ Some of the functions of the radio, the CD and cassette modes
- ▷ The cruise control
- ▷ Selected cellular phone functions and
- ▷ the voice control

In order to operate a system via the MFL, the corresponding system controls must be switched on.

The illustration shows the maximum possible number of controls, corresponding to a full range of optional equipment. Refer to the individual operating instructions for more detailed descriptions of the equipment.

1 Press briefly:
Receive an incoming phone call, initiate dialing and end a call.
Press and hold:
Activate and deactivate the voice control

2 Radio/Telephone: Volume

3 Radio/Telephone: Scan forward/backward or scan station keys or scroll in the phone listings.
Fast forward and back for CD and cassette modes

4 Horn: The entire surface

5 Cruise control: Activate stored setting (resume)

6 Cruise control: Activate/Interrupt/Deactivate.

7 Cruise control: Store and accelerate (+); decelerate and store (–)

8 Radio/Telephone: Selection

Online Edition for Part No. 01 41 0 004 597 - © 08/99 BMW AG

Hazard warning flashers

The push-button flashes rhythmically when the hazard flashers are on.

To help you locate the switch in an emergency, the button is illuminated whenever the vehicle lamps are on.

Warning triangle*

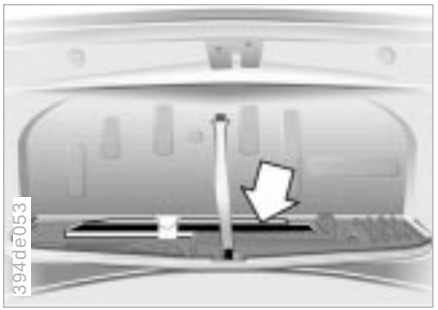

The hazard warning triangle is stored underneath the luggage compartment lid in the onboard tool holder where it is quickly available.

CarManuals2.com

Comply with legal requirements which cover the availability of a hazard warning triangle in the car.◀

First-aid kit

Stored between the rear seats. Pull the lever (arrow) and fold the cover forward.

Some of the articles in the first-aid kit may be used within a limited time only. For this reason, check the expiration dates of each of the items regularly, and replace any whose expiration dates have passed. You can acquire replacements in any drugstore or pharmacy. Comply with legal requirements which cover availability of a first-aid kit in the car.◀

When handling fuels, comply with all of the applicable safety precautions and regulations posted at the filling station. Never carry spare fuel containers in your vehicle. Whether empty or full, these containers can leak, cause an explosion, or lead to fire in the event of a collision.◀

CarManuals2.com

Fuel filler door

Before filling the tank, shut off the engine. If you do not, fuel cannot flow into the tank and the "Service Engine Soon" warning lamp may come on, refer to page 21.◀

To open, press against the forward edge.

To unlock the fuel filler door if the central locking system malfunctions, refer to page 182.

Simple and environmentally friendly

Open the filler cap carefully to prevent fuel from spraying out. Fuel spray may cause injury. Do not top off. Topping off may cause fuel spillage.◀

Keep the filler cap in the bracket attached to the fuel filler door.

Refueling

When refueling, insert the filler nozzle completely into the filler pipe. Pulling the nozzle out of the pipe during refueling

- ▷ results in premature pump shutoff
- ▷ and will reduce the effect of the vapor recovery system on the pump.

If the filler nozzle is used correctly the fuel tank is full when it shuts off for the first time.

Tank capacity: Refer to page 201.

⚠ Close the fuel cap carefully after refueling. A loose or missing cap will activate the "Service Engine Soon" lamp.◀

Fuel specifications

Use unleaded gasoline only.

Recommended fuel: Premium with a minimum octane rating of 91 AKI.

BMW engines are equipped with knock sensors and will adapt automatically to different octane ratings, provided that the minimum octane requirement (87 AKI) is met.

Fuels with higher octane ratings will provide enhanced performance and lower fuel consumption, while the use of fuels with lower octane ratings will have the opposite effect.

⚠ Do not use leaded fuels. The use of leaded fuels will cause permanent damage to the system's oxygen sensor and the catalytic convertor.◀

CarManuals2.com

AKI = Anti Knock Index

Tire inflation pressure

The inflation pressures are indicated on a sticker attached to the B-pillar behind the driver's door (visible with door open).

Check tire pressures

All pressure specifications are indicated in psi (kilopascal) with cold tires (cold = ambient temperature). Refer to the next page as well.

For vehicles with Tire Pressure Control (RDC)*:
After a correction of the tire inflation pressure, reactivate the system. Refer to page 98.

Check tire inflation pressures regularly – at least every two weeks and before beginning a longer trip. Incorrect tire pressure can otherwise lead to tire damage and accidents.
Also check the inflation pressure of the spare tire. Inflate the spare tire to the highest inflation of any tire on your vehicle.◀

Comply with tire approval specifications

The inflation pressures in the table apply to tires from BMW-approved manufacturers. Your BMW center is familiar with these pressures. Higher pressures may be specified for tires from other manufacturers. You will find a list of approved tires beginning on page 142.

Your vehicle is equipped with tires that not only meet US standards, but also European standards. We recommend the exclusive use of BMW-approved tires.

CarManuals2.com

Tire inflation pressure

Tires Tire inflation pressures in psi (kilopascal)				
235/60 R 16 100 H M + S 235/60 R 16 100 W 245/55 R 16 100 W 235/50 ZR 18 Rear: 255/45 ZR 18 215/65 R 16 98 Q M + S 235/60 R 16 100 Q M + S 245/55 R 16 100 Q M + S	US/Canada:			
	33 (230)	41 (280)	33 (230)	41 (280)
	outside of the US/Canada:			
	29 (200)	33 (230)	33 (230)	41 (280)

CarManuals2.com

Opening and closing:
Keys 32
Electronic vehicle immobilizer 33
Central locking system 34
Opening and closing – from the outside 34
Using the key 34
Using the remote control 35
Opening and closing – from the inside 38
Luggage compartment lid 39
Luggage compartment 41
Alarm system 42
Electric power windows 44
Security glass 45
Sliding/Tilt sunroof 46

Adjustments:
Seats 48
Steering wheel 51
Mirrors 52
Seat, mirror and steering wheel memory 53
Car Memory, Key Memory 55

Passenger safety systems:
Safety belts 56
Airbags 57
Child restraints 60
Child restraint installation 61
Child-safety locks 62

Driving:
Steering/Ignition lock 63
Starting the engine 64
Switching off the engine 65
Parking brake 65
Automatic transmission 66
Automatic transmission with Steptronic 69
Indicator/Headlamp flasher 71
Washer/Wiper system/ Rain sensor 72
Rear window defroster 74
Cruise control 74

Everything under control:
Odometer, outside temperature display 76
Tachometer 76
Energy control 77
Fuel gauge 77
Temperature gauge 78
Service Interval Display 78
Check Control 79
Multi-Information Display (MID) 82
Digital clock 83
Onboard computer 88

CarManuals2.com

Online Edition for Part No. 01 41 0 004 597 - © 08/99 BMW AG

Technology for safety and convenience:
Park Distance Control (PDC) 94
Automatic Stability Control plus Traction (ASC+T)/Dynamic Stability Control (DSC) 96
Electronic Damper Control (EDC) 97
Tire Pressure Control (RDC) 98

Lamps:
Parking lamps/Low beams 100
Instrument panel lighting 100
High beams/Parking lamps 101
Fog lamps 101
Interior lamps 102
Reading lamps 102

Controlling the climate for pleasant driving:
Automatic climate control 104
Rear passenger-area air conditioning 109
Seat heating 110
Steering wheel heating 110
Roller sun blinds 111
Independent ventilation system 111

Cabin convenience:
Integrated Universal Remote Control 112
Glove compartment 115
Center armrests 115
Additional storage areas 117
Cup holders 117
Cellular phone 117
Ashtray 118
Cigarette lighter 119
Rear footrests 119

Loading and transporting cargo:
Ski bag 120
Cargo loading 122
Roof-mounted luggage rack 122

CarManuals2.com

Overview

Controls and features

Operation, care and maintenance

Owner service procedures

Advanced technology

Technical Data

Index

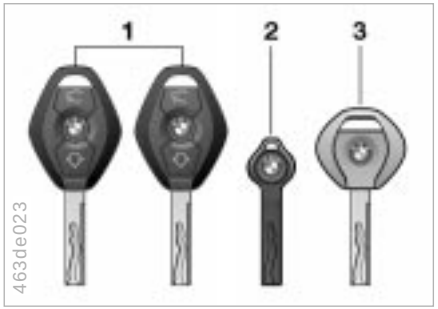

1 The master keys with remote control determine the functions of the Key Memory. Refer to page 55.

There is an extended-life battery in every master key that is charged automatically in the steering lock as you drive.
For this reason, if you have a master key that is not used, use that key approximately once every year while driving for an extended period to charge the battery. Refer also to page 35.◀

2 Spare key for storage in a safe place, such as in your wallet. This key is not intended for continuous use

3 Door and ignition key
The locks for the luggage compartment lid and the glove compartment cannot be operated with this key – this is recommended for valet parking, for instance.

Replacement keys

Replacement keys are available exclusively from your BMW center. Since the keys belong to a security system (refer to "Electronic vehicle immobilizer" on page 33), your BMW center is obligated to be sure that a person requesting a key is authorized to do so.

If possible, take all of the master keys that belong to the vehicle with you when you pick up your replacement key.
Whenever you receive a new replacement key, turn that key to position 2 in the ignition lock once (ignition switched on) and then back. This allows the electronic vehicle immobilizer to "learn" the new key.◀

CarManuals2.com

The key to security

Your BMW is equipped with a passive anti-theft system. This electronic immobilization system is designed to reduce the susceptibility of your vehicle to theft by making it impossible to start the engine using any means other than the special keys furnished with the vehicle. Your BMW center can cancel the electronic system authorization for individual keys (for instance, in the event of loss). A deactivated key can no longer be used to start the engine.

How the electronics work

CarManuals2.com

At the heart of this system is an electronic chip which is integrated into the key. The lock mechanism itself is actually a dual-function device, simultaneously serving as a communications interface designed to allow the security system to maintain a continuous stream of variable, vehicle-specific signals with the electronic circuitry in the key. The system will not release the ignition, fuel injection and starter unless it recognizes an "authorized" key.

▷ Force applied to the key can damage the integrated electronic circuitry. A damaged key can no longer be used to start the engine.◀

The concept

The central locking system is ready for operation as soon as you close the driver's door. The system engages and releases the locks on the

- ▷ doors
- ▷ luggage compartment lid
- ▷ fuel filler door.

The central locking system can be operated

- ▷ from the outside via the driver's door lock or by using the remote control
- ▷ from inside via the central locking button.

Activating the system from the inside does not lock the fuel filler door (see page 38). When the system is actuated from the outside, the anti-theft system is activated simultaneously. The alarm system is also activated or deactivated.

If locked from inside, the central locking system unlocks automatically (only those doors that were not locked separately with the safety lock buttons) in the event of an accident. Refer to page 38. In addition, the hazard warning flashers and interior lamps come on.

Opening and closing – from the outside

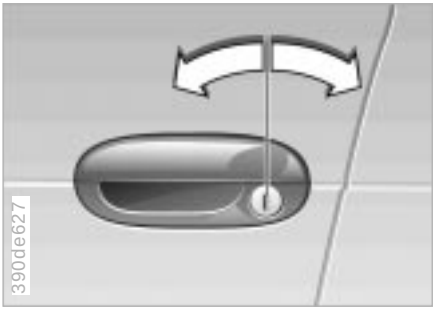

Using the key

One turn of the key in the driver's door lock unlocks the driver's door only. Turning the key a second time unlocks all of the remaining doors, the luggage compartment lid and the fuel filler door.

You can have an acknowledgment signal set to confirm that the vehicle is correctly closed (not released at this time).◀

When a door is opened, the interior lamps and the exterior door handle illumination are switched on. Switching off is automatic.◀

Convenience operating mode

You can also operate the windows and the sliding/tilt sunroof via the driver's door lock.

- ▷ To open: With the door closed, turn the key to the "Unlock" position and hold it.
- ▷ To close: With the door closed, turn the key to the "Lock" position and hold it.

Watch the closing process carefully and be sure that no one is trapped by the closing motion. The movement stops when you release the key.◀

Manual operation

(in the event of an electrical failure)

Turn the key all the way to the extreme left or right to unlock/lock the door.

CarManuals2.com

Using the remote control

The remote control makes unlocking and locking the doors of your vehicle very convenient. In addition, it provides three additional functions that you can only execute via the remote control:

- Switching on the interior lamps and illuminating the exterior door handles. With this function, you can also "search for" your vehicle, when parked in an underground garage, for instance
- Opening luggage compartment lid
  The luggage compartment lid will open slightly, regardless of whether the lid was previously locked or unlocked
- Panic Mode
  In case of danger, you can trigger an alarm.

The anti-theft system is also deactivated/activated simultaneously with the unlocking or locking of the vehicle, and the alarm system is disarmed/armed.

When the vehicle is unlocked, the interior lamps and the exterior door handle illumination are switched on.

You can have an acknowledgment signal set to confirm that the vehicle is correctly closed (not released at this time).◀

Master keys

Keys with remote control are master keys. Refer to page 32.

CarManuals2.com

Since children might be able to lock the doors from the inside, take the vehicle's keys with you so that the vehicle can be opened again from the outside at any time.◀

Master keys that are used repeatedly are always ready for operation since the battery in the key is charged automatically in the steering lock as you drive.
If it is no longer possible to lock the vehicle via the remote control, the battery is discharged. Use this key while driving for an extended period in order to charge the battery. Refer also to page 32.
To prevent unauthorized use of the remote control, surrender only the door and ignition key 3 or the spare key 2 (refer to page 32) when leaving the vehicle for valet parking, for example.
In the event of a system malfunction, please contact your BMW center. You can also obtain replacement keys there.◀

Opening and closing – from the outside

Unlocking and convenience opening mode

To release: Press button 1.

Press the button once to unlock the driver's door only; press a second time to unlock all remaining doors as well as the luggage compartment and fuel filler door.

Convenience opening mode: Press and hold button 1. The windows and the sliding/tilt sunroof are opened.

To lock

Press button 2.

CarManuals2.com

Deactivating the tilt sensor alarm system and the interior motion sensor

Press button 2 again immediately after locking.
For additional information, refer to page 43.

To switch on the interior lamps and exterior door handle illumination

After locking the car, press button 2 again.

To open the luggage compartment

Press button 3.

The luggage compartment lid will open slightly, regardless of whether it was previously locked or unlocked.

Before beginning a trip, be sure that the luggage compartment lid was not opened unintentionally.◀

Panic Mode

By pressing and holding button 3 for 2 to 5 seconds, you can trigger the alarm system if there is an impending danger if the system has been armed.

The alarm is deactivated by pressing button 1.

Non-BMW systems

CarManuals2.com

The remote control system's functioning may be affected by other units or equipment operating in the immediate vicinity of your car.

If this should this occur, you can open and close the vehicle using the master key in the door lock.

For US owners only

The transmitter and receiver units comply with part 15 of the FCC (Federal Communications Commission) regulations. Operation is governed by the following:

FCC ID: LX8EWS
LX8FZVS
LX8FZVE

Compliance statement:
This device complies with part 15 of the FCC Rules. Operation is subject to the following two conditions:

- This device may not cause harmful interference, and
- this device must accept any interference received, including interference that may cause undesired operation.

Any unauthorized modifications to these devices could void the user's authority to operate the equipment.◀

Use this button to operate the central locking system when the front doors are closed. With this button, only the doors and luggage compartment lid are unlocked or locked. The antitheft system is not activated.
The fuel filler door also remains unlocked to allow refueling.

If you desire, the central locking system will secure the locks as soon as you start to drive. This can be adjusted to be key-specific.◀

If only the driver's door was unlocked from the outside and you press the button

- ▷ all other doors, the luggage compartment lid and the fuel filler door will be unlocked if the driver's door is open
- ▷ the driver's door will be locked again if it is closed.◀

To unlock and open the doors

- ▷ Either unlock the doors together with the button for the central locking system and then pull each of the release handles above the armrests or
- ▷ pull the release handle for each door twice: The first pull unlocks the door, and the second one opens it.

Doors locked from outside can be opened from inside by first pressing the button and then pulling a release handle twice.◀

To engage locks

- ▷ Use the central locking system button to locks all doors at once, or
- ▷ press down the individual door lock buttons. As an added design feature to prevent the driver from being inadvertently locked out of the vehicle, the driver's door lock button will not engage as long as the door is open.

When the vehicle is moving, do not lock the doors with their lock buttons since the doors locked in this manner would not open automatically in the event of an accident.
Children might be able to lock the doors from the inside. For this reason, take the vehicle's keys with you so that the vehicle can be opened again from the outside at any time.◀

When the low beams are switched on, the interior door handles are lighted. The brightness is controlled by the instrument panel lighting. Refer to page 100.◀

CarManuals2.com

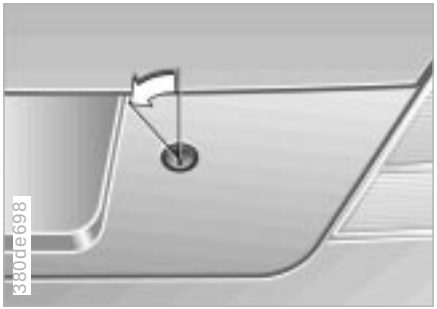

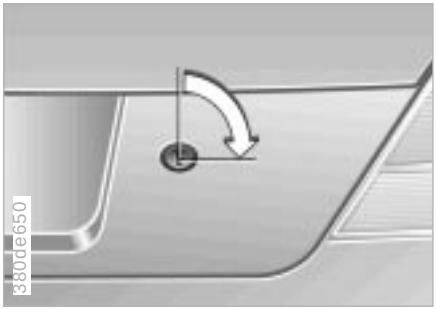

The lock

Only the master key (refer to page 32) fits in the lock of the luggage compartment lid.

Opening separately

Turn the master key to the left in the luggage compartment lid lock to the stop – the luggage compartment lid will open slightly.

The luggage compartment is locked again as soon as you close the lid.

Locking separately

Turn the master key to the right past the resistance point and then pull it out in the horizontal position.

CarManuals2.com

This locks the luggage compartment lid and disconnects it from the central locking system. This feature can be used to prevent unauthorized access to the luggage compartment when you surrender the door and ignition key (refer to page 32) for valet parking, for instance.

Manual operation

(in the event of electrical failure)

Turn the master key to the left in the luggage compartment lock clear to the stop – the luggage compartment lid will open.

The luggage compartment is locked again as soon as you close the lid.

Opening from the inside

If the luggage compartment lid has not been locked separately, you can open it with this button when the vehicle is stationary.

CarManuals2.com

Closing

The handle recess in the interior trim panel of the luggage compartment lid (arrow) makes it easier to pull the lid down.

Automatic Soft-Close feature

To close the luggage compartment lid, merely press it down gently. The closing process will then be carried out automatically.

To avoid injuries, be sure that the travel path of the luggage compartment lid is clear when it is closed, as with all closing procedures.
Operate the vehicle only when the luggage compartment lid is completely closed. Otherwise, exhaust fumes could penetrate the interior of the vehicle. Should it be absolutely necessary to operate the vehicle with the luggage compartment lid open:

- ▷ Close all windows. Shut the sliding/tilt sunroof
- ▷ Increase the airflow of the automatic climate control to a high level. Refer to page 107.◀

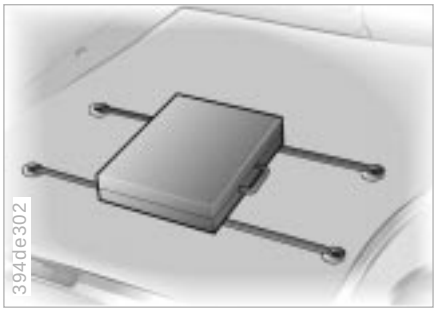

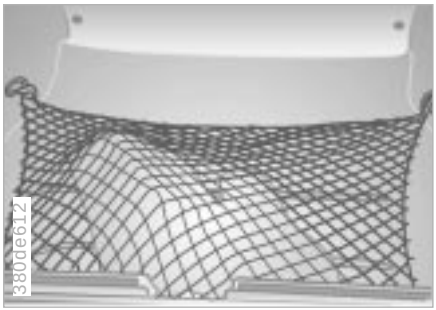

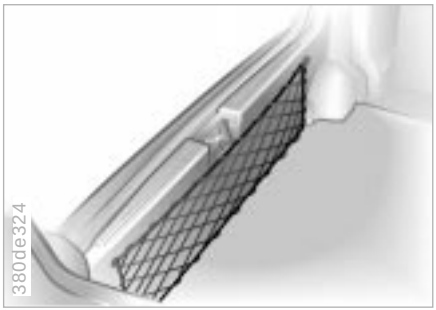

Luggage straps

Use the straps on the floor of the luggage compartment to secure smaller suitcases.

Movement is reduced, when objects are placed on the straps.

Lashing eyes located at the front corners and the rear wall of the luggage compartment provide you with a convenient means of attaching draw straps to secure luggage.

Refer also to "Cargo Loading" on page 122.

Nets

To secure your luggage, you may either hook nets

- ▷ into the lashing eyes on the front corners and rear wall of the luggage compartment or
- ▷ into the rear wall of the luggage compartment and the mounting points under the rear parcel tray.

You can place smaller articles in the net on the rear wall of the luggage compartment.

CarManuals2.com

The concept

The vehicle alarm system responds:

- ▷ When a door, the hood or the luggage compartment lid is opened
- ▷ To movement inside the vehicle (interior motion sensor)
- ▷ To variations in the vehicle tilt sensor such as occur during attempts to steal the wheels or tow the vehicle
- ▷ To interruption of battery voltage.

The system responds to unauthorized vehicle entry and attempted theft by simultaneously activating the following:

- ▷ Sounding an acoustical alarm for 30 seconds
- ▷ The hazard warning flashers are activated for approx. five minutes
- ▷ The high beams flash on and off in the same rhythm.

To arm and disarm the alarm system

When the vehicle is locked or unlocked via a door lock or with the remote control, the alarm system is also simultaneously armed or disarmed.
The interior motion sensor is activated approx. 30 seconds after you have finished locking the car.

The system indicates that it has been correctly armed by switching on the hazard flashers for a single cycle and by emitting an acoustical signal.

You can have different acknowledgment signals set to confirm arming and disarming (not released at this time).◀

CarManuals2.com

You can also open the luggage compartment lid when the system is armed by pressing button 3 of the remote control (refer to page 37). When the lid is closed, it is once again deadlocked.

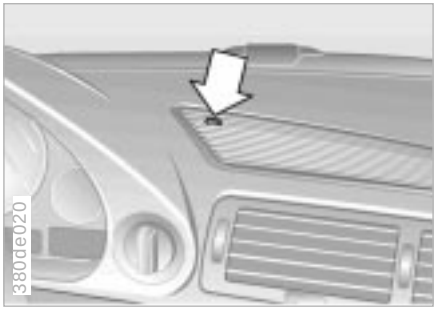

Indicator lamp displays

- ▷ The indicator lamp on the top of the instrument panel flashes continuously: The system is armed
- ▷ The indicator lamp flashes during arming: Door(s), the hood or luggage compartment lid are not completely closed. Even if you do not close the alerted area, the system begins to monitor the remaining areas, and the indicator lamp flashes continuously after 10 seconds. However, the interior motion sensor is not activated
- ▷ If the indicator lamp goes out when the system is disarmed: No unauthorized entries have been detected in the period since the system was armed

Online Edition for Part No. 01 41 0 004 597 - © 08/99 BMW AG

▷ If the indicator lamp flashes for 10 seconds when the system is disarmed: An attempted entry has been detected in the period since the system was armed.

Following triggering of an alarm, the indicator lamp will flash continuously.

Avoiding unwanted alarm

The tilt alarm sensor and interior motion sensor may be switched off at the same time. By doing this, you can prevent false alarms on garage ramps or when the vehicle is transported by trailer or train, for instance.

Lock the vehicle twice (= arm the system) by pressing button 2 on the remote control twice in succession (refer to page 36) or lock the vehicle twice with the key (refer to page 34).

The indicator lamp lights up briefly and then flashes continuously. The tilt alarm sensor and the interior motion sensor are deactivated for as long as the system remains armed.

Interior motion sensor

The transmitter and receiver of the interior motion sensor are located in a trim panel in the vehicle's headliner.

CarManuals2.com

In order for the interior motion sensor to function properly, the windows and sliding/tilt sunroof must be completely closed.

However, you should switch off the interior motion sensor (refer to the previous column) whenever

▷ children or animals are left in the vehicle

▷ the windows and/or the sliding/tilt sunroof are left open.

Emergency deactivation procedure

If the car is locked and it is not possible to disarm the system in the normal manner, proceed as follows:

1 Use the key to unlock the door (the alarm sounds for 30 seconds when opening the door)

2 Turn the key to ignition key position 1; the central locking system unlocks the remaining doors.

The alarm system is now disarmed. Refer the problem to your BMW center.

Electric power windows

Opening and closing the windows

In ignition key position 1 or 2:

- ▷ Depress the rocker switch until you feel resistance:
  The window continues moving for as long as you maintain pressure on the switch
- ▷ Press the rocker switch beyond the resistance point:
  The window moves automatically. Press the switch a second time to stop the window

After the ignition has been switched off:

- ▷ You can continue to operate the power windows as long as one of the front doors has not been opened. To open a window, press the rocker switch past the resistance point.

⚠ Remove the ignition key when you leave the vehicle and close the doors so that children can no longer operate the power windows, possibly injuring themselves, for instance.◀

For the convenience operating mode via the door lock or the remote control, refer to page 34 or page 36.

CarManuals2.com

Safety feature

A contact strip is integrated into each of the upper window frame sections. If pressure is exerted against this contact strip while a window is being raised, the system will respond by stopping the window and then retracting it a small distance.

⚠ Despite this safety feature, be extremely careful that the closing path of the window is not obstructed whenever it is closed. Otherwise, an object might not touch the contact strip in some situations (with very thin objects, for instance). You can override this safety feature by pressing the switch beyond the resistance point and holding it.
Because the power windows are sealed at high pressure to prevent wind noise when closed, a powerful motor is required for efficient closing. When closing the windows, always ensure that they are not obstructed in any way. Unsupervised use of these systems can result in serious personal injury. Remove the ignition key to deactivate the electric power windows whenever you leave the car. Never leave the keys in the car with unsupervised children. Never place anything that could obstruct the driver's vision on or next to the windows.◀

Online Edition for Part No. 01 41 0 004 597 - © 08/99 BMW AG

Electric power windows

Safety switch

You can use the safety switch (arrow) to deactivate the rear window switches (when children are riding in the rear seats, for instance).

Press the safety switch whenever children are riding in the rear of the vehicle. Careless use of the power windows can lead to injury.◀

Security glass*

Break-resistant security glass

The glass installed on all side windows and the rear window is designed to offer resistance to breakage and vandalism. Each break-resistant window contains several layers of clear synthetic plastic film sandwiched between the inner and outer glass panes. In addition, another film is applied to the inner surface of the glass (facing the passenger compartment). This film prevents the glass, if shattered, from spreading into the passenger compartment.
Please note the following precautions regarding this inner glass surface film:

1 The film is not scratch-resistant. Avoid contact with sharp objects which may break through or cut the film
2 Clean the glass with water. If ineffective, you may use regular household window cleaner; wipe the cleaner off immediately.
Do not use window cleaners containing solvents or abrasives, as these may scratch the film
3 Do not apply any self-adhesive labels, or labels with tape to the inner surface
4 Do not apply window tint film to the inner window surface
5 If frost or ice builds up on the inner surface in cold, high-humidity climates, do not use a scraper or an "ice-removing spray." Start the engine and refer to the instructions on defrosting the door windows.

CarManuals2.com

To prevent injuries, exercise care when closing the sliding/tilt sunroof and keep it in your field of vision until it is shut.
Before leaving the car, switch off the electric sunroof mechanism by taking out the ignition key. Do not leave children unattended in the vehicle with access to vehicle keys. Use of the key can result in starting of the engine and operation of vehicle systems such as power sunroof, etc. Unsupervised use of these systems can result in serious personal injury.◀

To avoid pressure or drafts in the passenger compartment when the sunroof is open or lifted, keep the air vents in the dashboard open and increase the air supply if necessary. Refer to page 107.
If the sunroof is completely open, air disturbances may be caused in the vehicle when you are driving at higher speeds. Close the roof as far as is necessary until this natural phenomenon ceases.

For the convenience operating mode via the door lock or the radio remote control, refer to page 34 or 36.

Safety feature

If the sliding/tilt sunroof encounters resistance at a point roughly past the middle of its travel when it is closing, the closing cycle is interrupted and the sunroof will open again slightly.

Despite this safety feature, be extremely careful that the closing path of the sunroof is not obstructed whenever it is closed. Otherwise, triggering the closing-force limitation may not be ensured in some situations (with very thin objects, for instance). You can override this safety feature by pressing the switch beyond the resistance point and holding it.◀

Lifting – opening – closing

From ignition key position 1 press the switch or slide it to the desired direction until you feel resistance.

When lifting, the headliner retracts several inches.

You can continue to operate the sunroof after the ignition has been switched off as long as one of the front doors has not been opened.

CarManuals2.com

Automatic* opening and closing

Press the switch past the resistance point briefly: The sunroof travels to either the fully-closed or fully-open position.

Other automatic operations are:

- ▷ With the sunroof open, press the switch briefly toward "Lift:" The sunroof automatically extends to its fully raised position
- ▷ With the sunroof lifted, press the switch briefly toward "Open:" The sunroof automatically opens all the way.

Pressing the switch again briefly stops the motion immediately.

Sliding/Tilt sunroof with glass moonroof*

CarManuals2.com

The options and control procedures are essentially the same as those previously described for the sliding/tilt sunroof. In order to open the raised roof, press the control switch towards "Open" until the roof has reached the desired position.

The headliner insert slides back somewhat when you raise the roof. When the roof is opened, the headliner retracts with it. The headliner will then automatically remain in its retracted position, but can be repositioned as desired.

Power loss or malfunction

After interruptions in electrical supply (when the battery is disconnected, for instance), the sunroof will only lift. To reinitialize the mechanism:

1. Raise the sliding/tilt sunroof all the way
2. Continue to hold the switch for approx. five seconds.

In the event of an electrical system malfunction, the sliding/tilt sunroof can be manually operated. Refer to page 182.

Seat adjustment

For maximum safety when adjusting the seat position, please observe the following:

Never try to adjust your seat while operating the vehicle. The seat could respond with unexpected movement, and the ensuing loss of vehicle control could lead to an accident.
Wear the safety belt firmly against your body at all times. In the event of a frontal impact, a loose lap belt could slide over your hips, leading to abdominal injury. In addition, the safety belt's restraint effectiveness is reduced if the belt is worn loosely.
Never ride with the backrest reclined to an extreme horizontal angle (especially important for front passengers to remember). Keep the backrest relatively upright to minimize the risk of "sliding under" the safety belt and sustaining injury in an accident.
Do not slide the seats to the rear when the vehicle is at an extreme angle (on garage ramps or steep slopes, for instance), to prevent the shoulder strap's automatic height adjustment mechanism from disengaging.◀

Electric power seats

1 Tilt angle (driver's seat only)
2 Forward - backward adjustment
3 Cushion height
4 Backrest angle
5 Head restraint height

Adjust the head restraint manually by tilting it in the desired direction.

Head restraints reduce the risk of spinal injury in the event of an accident.
Adjust the head restraint so that its center is approximately at the height of the ear.
For maximum safety, read carefully and comply with the adjustment instructions presented here.◀

Correct sitting posture

To reduce strain on the spinal column, sit all the way back in the seat and rest your back fully against the backrest. Ideal sitting posture is achieved with your head extending from your spine in a straight line.
For long-distance driving, you may wish to increase the backrest tilt-angle slightly to reduce muscular tension. You should be able to grasp the steering wheel at its highest point with your arms slightly bent.

Lumbar support*

Refer to the BMW comfort seat on the next page.

CarManuals2.com

BMW sports seat*

With this seat, you can also adjust the thigh support. Press the switch to make the adjustment.

BMW comfort seat*

This seat allows you to make additional adjustments for

1 Lumbar support

2 Shoulder support

Lumbar support

You can adjust the backrest's contour for additional support in the curvature of your spine's lumbar region.

The upper hips and spinal column receive supplementary support to help you maintain a relaxed, upright posture.

▷ Press front/rear of switch: Increase/decrease curvature.

▷ Press the upper/lower end of the switch: Increase the upper/lower curvature.

CarManuals2.com

Shoulder support

You can use the adjustable upper backrest for supplementary support in the shoulder region. This provides a relaxed driving position and helps relieve stress on the shoulder muscles.

Press the rocker switch: The support angle of the upper backrest section is adjusted.

To obtain an optimal seating posture, we recommend:

Driver's side and front passenger's side:

1 Move the upper backrest section back completely

2 Adjust the optimal seat position as described on page 48

3 Bring the upper backrest section forward until your shoulders enjoy firm support.

Online Edition for Part No. 01 41 0 004 597 - © 08/99 BMW AG

BMW comfort seat*

Front passenger's seat adjusted for relaxed traveling:

1 Adjust the upper backrest section to its extreme rear position
2 Increase the seat cushion tilt
3 Tilt the backrest more
4 Bring the upper backrest section forward.

⚠ Make corrections in the forward-backward adjustment of the seat to ensure that the safety belt still fits firmly against your body. If you do not do this, the protection provided by the safety belt may be reduced.◀

When you are adjusting the seat, select a position in which you remain as far from the instrument panel as possible.

BMW contour seat*

In addition to the adjustments offered by the electric power seat, there are adjustments for thigh support, shoulder support and lumbar support.

Thigh support

Refer to the BMW sports seat on the previous page.

Shoulder support

Refer to BMW comfort seat on the previous page.

Lumbar support

Refer to BMW comfort seat on the previous page.

CarManuals2.com

BMW active seat*

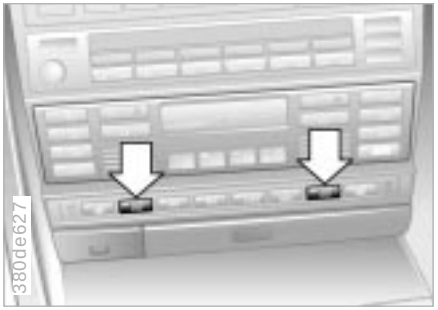

Actively changing the surface of the seat helps to prevent muscle tension, back pain in the lumbar region, and symptoms of fatigue.

To activate this feature, press the button (arrow).

For more details, please refer to the section headed "Advanced technology" on page 190.

Rear power seat*

1 Backrest angle

2 Head restraint height

3 Lumbar support

The head restraint extends automatically whenever a passenger fastens the safety belt at one of the rear seating positions.

Correct head restraint height with switch 2.

For information on the lumbar support, refer to the BMW comfort seat on page 49.

Adjusting the steering wheel

The steering wheel can be moved in any of four directions. Adjust by moving the control lever in the desired direction.

Do not adjust the steering wheel while the vehicle is moving. There is a risk of accident from unexpected movement.◀

To store the steering wheel setting, refer to "Seat, mirror and steering wheel memory" on page 53.

Electric steering wheel adjustment

In order to make it easier to get into and out of the car, the steering wheel automatically moves into the top position and returns to the driving (memory) position.

This automatic feature is controlled by the position of the ignition key and by the driver's door.

Your BMW center can adjust your vehicle's systems in such a manner that your personalized settings are automatically called up for the steering wheel adjustment when you unlock the vehicle with your personal remote control.◀

CarManuals2.com

Exterior mirrors

1 Switch for 4-way adjustment

2 Left/right selection switch

You can also adjust the mirrors manually by pressing against the outer edges of their lenses.

To store the mirror angles: Refer to "Seat, mirror and steering wheel memory" on page 53.

The mirror on the passenger's side features a lens with a more convex surface than the mirror installed on the driver's side. When estimating the distance between yourself and other traffic, bear in mind that the objects reflected in the mirror are closer than they appear. This means that estimations of the distance to following traffic should not be regarded as precise.◀

Your BMW center can adjust your vehicle's systems in such a manner that your personalized settings are automatically called up for the mirror adjustment when you unlock the vehicle with your personal remote control.◀

Electric heaters

Both mirrors are automatically heated with the ignition key in position 2.

CarManuals2.com

Inside rearview mirror with automatic dimming feature

By responding to the effects of ambient light and the glare from following traffic, this mirror automatically dims through an infinitely-variable range.

The mirror automatically reverts to its clear, undimmed setting whenever you move the selector lever to "Reverse."

To ensure that the mirror continues to operate properly, keep the two photocells clean and unobstructed. One photocell is in the mirror glass (arrow), while the other is offset somewhat on the other side of the mirror.

For an explanation of the electrochromic technology used in this mirror, refer to page 192.

Online Edition for Part No. 01 41 0 004 597 - © 08/99 BMW AG

CarManuals2.com

Lighted vanity mirror

Fold down the sun visor and slide the cover panel to the side as required.

The mirror lamps operate in ignition key positions 1 and 2.

Sun visors

These can be folded down toward the windshield or swiveled out against the side windows.

You can store and call up three different seat, exterior mirror and steering wheel positions.
The illustration shows the buttons on the driver's door, for making these position adjustments.

The adjustment for the lumbar support is not stored in the memory.

To store

1 Turn the ignition key to position 1 or 2
2 Adjust for the preferred seat, exterior mirror and steering wheel positions
3 Press the MEMORY button: The indicator lamp in the button lights up
4 Press memory button 1, 2 or 3, as desired: The indicator lamp goes out.

To select a stored setting

Convenience function:

1 Open driver's door after unlocking or ignition key in position 1
2 Briefly press memory button 1, 2 or 3 as desired.
Movement stops immediately when one of the seat-adjustment or memory buttons is activated during the adjustment process.

Security function:

1 With driver's door closed and ignition key either removed or in position 0 or 2
2 Maintain pressure on desired memory button 1, 2 or 3 until the adjustment process is completed.

If you press the MEMORY button accidentally: Press the button a second time, the indicator lamp goes out.

⚠ Do not call up a position from the memory while the vehicle is moving. There is a risk of accident from unexpected movement of the seat or steering wheel.◀

Your BMW center can adjust your vehicle's systems in such a manner that your personalized settings are automatically called up for the seat, mirror and steering wheel positions when you unlock the vehicle with your personal remote control.◀

If you make use of this setting mode, be sure that the footwell behind the driver's seat is unobstructed before unlocking the vehicle. If you fail to do so, persons or objects could be injured or damaged if the seat should move backward.◀

Passenger side exterior mirror tilt function

(automatic curb monitor)

1 Move the mirror selector switch (arrow) to the "driver's mirror" position
2 When the selector lever is placed in "Reverse," the passenger-side mirror tilts downward to help the driver monitor the area directly adjacent to the car during parking (curbs, etc.).

You can deactivate this automatic feature: Set the mirror selector switch to the passenger's mirror position.

CarManuals2.com

How the system functions

You have probably frequently wished that you could configure individual functions of your vehicles to reflect your own personal requirements. In engineering your vehicle, BMW has included several user-defined functions in the vehicle's design. Your BMW center can make these settings for you.

There are settings related to the vehicle ("Car Memory") and settings related to individuals ("Key Memory"). You can have two different basic settings adjusted for two different persons. The only requirement is that each person uses his or her own remote control key.

When your vehicle is unlocked with the remote control, the vehicle recognizes the individual user by means of a data exchange with the key, and makes adjustments accordingly.

CarManuals2.com

In order for you to distinguish between different keys, colored decals are supplied together with the keys.

What the system can do

Your BMW center can provide you with details on the capabilities of the Car Memory and Key Memory systems.

You will see this symbol throughout the Owner's Manual. It is to remind you at appropriate places of the settings that are available to you.◀

An example of Key Memory is the automatic adjustment of the driver's power seat with stored settings for the individual person when the vehicle is unlocked.

Fasten your safety belt before starting off.

To fasten: Make sure you hear the catch engage in the belt buckle.

To release: Press the red button in the buckle. Hold the belt and guide it back into its reel.

The shoulder belt anchor automatically adjusts to continue providing an optimum fit when you move the seat forward or back.

The two safety belt buckles which are integrated in the rear seat are for passengers sitting on the left and right. The belt buckle with the word "CENTER" is intended exclusively for a passenger sitting in the middle.

For your safety, comply with the following instructions for wearing safety belts. If you do not, the safety belts may not be able to provide their maximum protection. All passengers in the vehicle should be aware of and comply with this information:
Never allow more than one person to wear a single safety belt. Never allow infants or small children to ride in a passenger's lap.
Avoid twisting the belt while routing it firmly across the hips and shoulder. Do not allow the belt to rest against hard or fragile objects in your pockets. Never route the belt across your neck, do not run it across sharp edges. Be sure that the belt does not become caught or jammed.
Wear the safety belt as firmly as possible against your body at all times. For this reason, avoid wearing bulky clothing which will prevent proper belt fit. Pull the safety belt across your shoulders frequently to re-tension it. In the event of a frontal impact, a loose lap belt could slide over your hips, leading to abdominal injury. In addition, the safety belt's restraint effectiveness is reduced if the belt is worn loosely.

Carwandalis2.com

Expectant mothers should always wear their safety belts, taking care to position the lap belt against the lower hips, where it will not exert pressure against the abdominal area.◀

For securing child seats, refer to page 60.

For care instructions, refer to page 159.

If the safety belt system has been subjected to the stresses involved in an accident or otherwise damaged: Have the entire safety belt mechanism replaced by your BMW center, including the safety belt tensioner. In addition, have your BMW center inspect the safety belt anchors. If a child restraint system was in the vehicle during an accident, consult the manufacturer's instructions regarding replacement.◀

Child restraint systems*

Never install a rear-facing child restraint device on the front passenger seat. Otherwise, injuries could occur when the airbag is triggered in the event of an accident.
Do not attempt to modify child restraint systems. If you do this, the protection provided by these systems could be impaired.◀

Online Edition for Part No. 01 41 0 004 597 - © 08/99 BMW AG

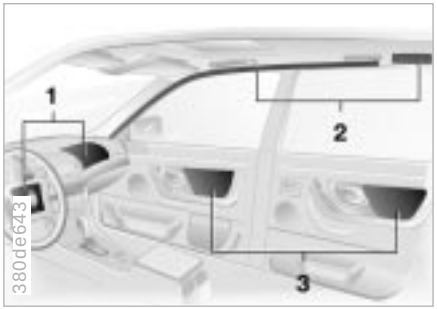

1 Front airbags for driver and front passenger

2 Side impact head protection system (front and rear*)

3 Side airbags (front and rear side*)

Protective effect

The front airbags supplement the three-point safety belts by helping to provide additional protection for the front-seat occupants in the event of a severe frontal collision in which the protection afforded by the belts alone may no longer be sufficient. The head protection and side airbags help provide protection in the event of a severe collision from the side. Each of the side airbags is designed to help support the upper body.

▷ The side airbags in the rear passenger area* of your vehicle may already have been deactivated either at the time of manufacture or by a BMW center. You can have them activated if you desire to do so. Please contact your BMW center for additional information.◀

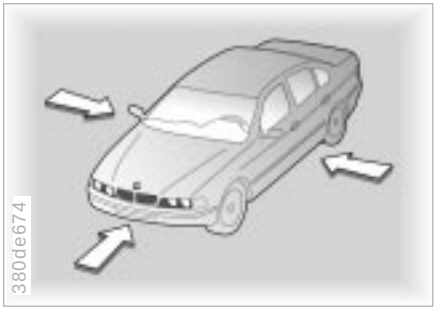

The illustration depicts schematically the primary directions of vehicle impact which initiate an airbag deployment.

CarManuals2.com

Indicator lamp

The indicator lamp indicates the operational readiness of the airbag system from ignition key positions 1 and 2.

System operational:

▷ The indicator lamp comes on briefly then goes out.

System malfunction:

▷ The indicator lamp fails to come on
▷ The indicator lamp comes on briefly before going out and then lighting up again.

A system malfunction could prevent the system from responding to an impact occurring within its normal response range.

Please have your BMW center inspect and repair the system as soon as possible.

Sitting correctly with airbags

For your safety, comply with the following instructions for the airbags. If you do not, the airbags may not be able to provide their maximum protection. All passengers in the vehicle should be aware of and comply with this information:
The airbags are supplemental restraint devices designed to provide extra protection; they are not a substitute for safety belts. Wear your safety belt at all times. The airbags will not be triggered in the event of a minor accident, a vehicle roll-over, or collisions from the rear. In these situations, the safety belts provide optimal protection.
Airbags are located under the cover panels in the steering wheel, in the instrument panel, in the side trim panels in the front and rear*, and in the windshild pillars and the sides of the headliner.
Select a seat position that is comfortable and allows the greatest possible distance from each of the airbags in your seating area.
Hold the steering wheel at the rim (hands at the "9 o'clock and 3 o'clock" positions) in order to avoid injuries to the hands or arms if the airbag is triggered. Do not place your hands on the center pad.
Never allow any objects to obstruct the area between the airbag and an occupant.
Do not use the cover panel above the passenger-side airbag as a storage area.
Never tape the airbag cover panels, cover them over or alter them in any other way.
Do not install a rear-facing child restraint system in the front passenger seat of your vehicle.
Infants or small children should never be held on the lap of a passenger.
If your vehicle is equipped with side airbags in the rear, be sure that child seats are installed correctly and with the greatest possible distance from the side trim panels. Do not allow children to lean out of the child's seat in the direction of the side trim panels. If they do so, serious injuries could occur if the airbag is triggered.◀

CarManuals2.com

At all times, occupants should sit upright and be properly restrained (infants and small children in appropriate child restraint systems; larger children and adults using the safety belts). Never let an occupant's head rest near or on a side airbag because the inflating airbag could cause a serious or fatal injury. Please note that the word "Airbag" imprinted on the door trim panel indicates the airbag's location.

Accident research shows that the safest place for children in an automobile is in the rear seat. However, a child sitting in the rear seat and not properly restrained may place his or her head on or near the airbag, if so equipped. For example, a child – even though belted – may fall asleep with his or her head against the side airbag. It may be difficult for a driver to ensure that children in the rear seat will remain properly positioned at all times and not place their heads on or near the side airbag.

Therefore, we recommend that the rear seat side airbags, if so equipped, be deactivated if children will travel in the rear seat.

The rear seat side airbags may already have been deactivated, either at the time of manufacture or by a BMW center. Labels in the rear door opening should indicate the status of your rear seat side airbags. If you are uncertain of their status, or wish to have the airbags activated or deactivated, please contact your BMW center.

Even when all these guidelines are observed, there is still a small residual risk of injuries to the face, hands and arms occurring from airbag deployment in isolated instances. The ignition and inflation noise may provoke a mild temporary hearing loss in extremely sensitive individuals.

Airbag warning information is also provided on the sun visors.

For additional information concerning the airbag system, refer to page 161 and 188.

CarManuals2.com

This is the right way a child should sit in a child restraint when rear side bags (arrow) are installed.

This is the right way a larger child should sit wearing the safety belt when rear side airbags (arrow) are installed.

CarManuals2.com

Child restraints

All occupants – especially children – should be restrained whenever riding in cars.

Infants or small children should never be held on the lap of a passenger.

Children should always sit in the rear and, depending on age, use either a child restraint system or the existing safety belts. Accident statistics have shown that children are safer when properly restrained in the rear seats than in the front seating positions.

Infants or toddlers should be secured with a child restraint system appropriate for their size.

Commercially-available child restraint systems are designed to be secured with a lap belt or with the lap belt portion of a combination lap/shoulder belt. Improperly or inadequately installed restraint systems can increase the risk of injury to children. Always read and follow the instructions that come with the system.

Online Edition for Part No. 01 41 0 004 597 - © 08/99 BMW AG

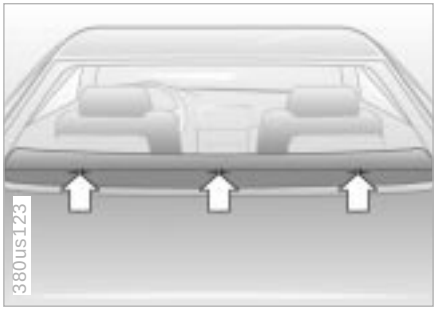

If you use a child restraint system with a tether strap, three additional tether anchorage points (refer to the arrows in the illustration) have been provided. Depending on the location selected for seating in the rear passenger area, attach the tether strap to the corresponding anchorage point to secure the child restraint system. Remove the cover first on the middle location.

If the respective seating position is fitted with a headrest lift the headrest and pass the tether strap between the headrest and the seat back.

Adjust the tether strap according to the child restraint manufacturer's instructions.

Before installing any child-restraint device or child seat, please read the following:
Never install a rear-facing child restraint system in the front passenger seat of this car.
Your car is equipped with an airbag supplemental restraint system for the front passenger. Because the backrest on any rear-facing child restraint system (of the kind designed for infants under 1 year and 20 lbs./9 kg) would be within the airbag's deployment range, you should never mount such a device in the front passenger seat, as the impact of the airbag against the child restraint's backrest could lead to serious or fatal injuries.
If it is necessary for a child (not an infant) to ride in the front seat, certain precautions should be taken. First, move the passenger seat as far away from the dashboard as possible. This important precaution is intended to maximize the distance between the airbag and the child. Older children should be tightly secured with the safety belt. Younger children should be secured in an appropriate forward-facing child restraint system that has first been properly secured with a safety belt.

CarManuals2.com

Never install a rear-facing child restraint system in the front passenger seat.
We strongly urge you to carefully read and observe the instructions for installation and use provided by the child restraint's manufacturer whenever you use such a device.
Be sure that all occupants (of all ages) remain properly and securely restrained at all times.◀

All rear seating positions in your vehicle meet the recommendations of SAE J1819, an industry recommended practice for securing child restraint systems in motor vehicles.

Child restraint installation

To allow you to use the safety belts to secure child-restraint systems, the belts at all rear positions feature a special locking mode.

A label with operating instructions is attached to the belt next to the latch plate (except the middle belt in the rear).

Lock the safety belt

Extract the entire length of the belt from the inertia reel mechanism. Allow the belt to retract somewhat and engage the buckle. Then tighten the belt around the child restraint. The belt is now locked. Comply with the instructions provided by the manufacturer of the child restraint.

Unlock the safety belt

Release the safety belt, remove the child's seat and retract the safety belt to its end position on the belt retractor.

CarManuals2.com

Child-safety locks

Insert the key into a rear door lock and turn it outward:

The door can now be opened from the outside only.

0 Steering lock engaged

This is the only position in which the ignition key can be inserted and removed.

An acoustic warning sounds when you fail to remove the ignition key before opening the driver's door.

After removing the key, turn the steering wheel slightly to the left or right until you hear the lock engage.

CarManuals2.com

Your vehicle is equipped with an interlock. For this reason, the ignition key cannot be turned to position 0 and removed until the selector lever is in position P.

In addition, the selector lever is locked in position P when the ignition key is in position 0 or removed from the ignition switch.

To move the selector lever out of P, the ignition key must be turned at least to position 2.

1 Steering lock disengaged

You will find that it is often easier to turn the ignition key from position 0 to position 1 when you move the steering wheel slightly to help disengage the lock.
Individual electrical equipment and accessories are available for use.

2 Ignition on

All electrical equipment and accessories are available for use.

3 Starting engine

Online Edition for Part No. 01 41 0 004 597 - © 08/99 BMW AG

Starting the engine

Before starting

▷ Press the parking brake pedal
▷ Place the selector lever of the automatic transmission in P or N.

Do not allow the engine to run in enclosed spaces. The exhaust gases contain carbon monoxide, an odorless and colorless, but highly toxic gas. Breathing the exhaust gases poses an extreme health risk, and can lead to unconsciousness and death.
Never leave the car unattended with the engine running, as such a vehicle represents a potential safety hazard.◀

Starting the engine

▷ Start the engine. Do not press the accelerator pedal.

Your BMW is equipped with the convenience starting feature.
Simply turn the key to position 3 (starter) and then release it immediately.
The starter continues to operate automatically until the engine starts.

If the battery's voltage is not adequate, the automatic starting procedure is not initiated, or it is interrupted. Should this condition arise, it remains possible to jump-start the engine (refer to page 183).
Do not allow the engine to warm up by leaving it running while the vehicle remains stationary. Instead, begin driving immediately at a moderate engine speed.◀

Should the engine fail to start on the first attempt (if it is very hot or cold, for instance):

▷ Press the accelerator pedal halfway down while engaging the starter.

BMW 740i/L:
Cold starts at extremely low temperatures, from approx. +5 °F (-15 °C) and at elevations above 3,300 feet (1,000 meters):

▷ Press the accelerator pedal halfway down while engaging the starter.

Engine idle speed is controlled by the engine computer system. Increased speeds at start-up are normal and should decrease as the engine warms up. If engine speed does not decrease, service is required.

To prevent the battery from discharging, always switch off any electrical devices not in use, as well as the ignition when the vehicle is not being driven.

CarManuals2.com

Switching off the engine

Turn the ignition key to position 1 or 0.

The vehicle must be stationary and the selector lever in "Park" before you can remove the ignition key. Always remove the ignition key and engage the steering lock before leaving the vehicle.◀

Parking brake

If, in exceptional circumstances, it should be necessary to engage the parking brake while the vehicle is in motion, depress the pedal cautiously and slowly while continuing to pull on the release handle.
Excessive pressure on the pedal can lead to overbraking and loss of traction at the rear.
The brake lamps do not come on when the parking brake is applied.◀

Depress the pedal. The "PARK BRAKE" (in Canada "P") indicator lamp in the instrument cluster comes on when the ignition key is in position 2. Refer to page 21.

To release the brake, pull the handle. Please remember that the brakes disengage immediately.

The parking brake is primarily designed to prevent the vehicle from rolling while parked, and operates against the rear wheels.

You can prevent corrosion from forming on the separate parking brake drums with an occasional gentle application of the parking brake when stopping at traffic lights.

CarManuals2.com

Selector lever positions

P R N D 4 3 2

Shift programs

Lever positions:

▷ A (Adaptive/Economy)
▷ M (Manual)

Selector lever in position 4:

▷ S (Sport program)

For an explanation of the programs, refer to the next page.

Starting engine

The engine can only be started in positions "Park" or "Neutral."

Changing the selector lever position

A detent prevents inadvertent shifts into some selector lever positions. To release the shift-lock mechanism, press the button on the front of the selector handle (arrow).

CarManuals2.com

▷ While the vehicle is stationary and before shifting out of "Park" or "Neutral," depress the footbrake in order to disengage the selector lever's lock mechanism (shift-lock).
Hold the footbrake down until starting off. Otherwise, the vehicle will "creep" when a drive position is engaged.◀

⚠ Before exiting the vehicle when the engine is running, place the selector lever in the "Park" or "Neutral" position and apply the parking brake. If you do not, the vehicle can move.
Do not leave the car unattended with the engine running. An unattended vehicle with a running engine represents a potential safety hazard.◀

P – Park

Select "Park" only when the vehicle is stationary. The transmission locks to prevent the rear wheels from turning.

R – Reverse

Select "Reverse" only when the vehicle is stationary.

N – Neutral

Select "Neutral" only if your journey is interrupted for a longer period.

D – Drive (automatic shift program)

This position is designed for driving under all normal operating conditions. All forward gears are available.

4 – Sport program

This position is recommended if your driving style is performance-oriented.

CarManuals2.com

3 and 2 – Shift limiter

Select this range when you wish to limit gear changes (on steep uphill or downhill slopes, for instance). The transmission upshifts only as far as the selected gear.

"Kickdown"

In the "Kickdown" mode, you achieve maximum engine performance.
Press the accelerator pedal past the increased resistance point at the full-throttle position.

Shift programs

The automatic transmission of your BMW is equipped with the Adaptive Transmission Control (ATC) as standard equipment.

When you select program A, the ATC system automatically adapts to individual driving styles and road conditions to provide optimal performance with the selector lever at position D.

Because of this, the remaining selector lever positions for forward driving are only required in extreme situations such as those listed in the description of position 2.

A – Adaptive program

This is the initial position that the transmission selects at every start. In the positions for forward driving, the ATC (Adaptive Transmission Control) automatically selects the optimal gear from different shift programs. To achieve this, the system constantly adapts to driver characteristics (such as a moderate or performance-oriented driving style), road condition factors (slick roads or extreme slopes, for instance) as well as the current driving situation (winding roads or mountain travel, for instance).

For details concerning ATC, please refer to the chapter titled "Advanced Technology" on page 188.

M – Manual program

This program is for driving in one gear (4th gear when D has been selected). The transmission then remains in the selected gear both when underway and when starting off. For instance, when you make a steep ascent with the selector lever in position 2, the transmission does not make undesired upshifts. The same principle applies during operation on ice-covered roads: By placing the selector lever in position 3 you can move off gradually, and the transmission will also suppress subsequent shifts into higher gears.

Selector lever positions

Positions 4, 3 and 2 have the function of enhanced control over shifting – control which is desired and intentionally selected.

The ATC also functions in these selector lever positions – of course with limitations for gear selection imposed by the lever position.

Special functions

In program A, the Adaptive Transmission Control influences several special functions in the selection of the drive gear.

With the system active, some shifts that would be made in other modes will be suppressed. The system also reacts to special situations by executing shifts that would not occur with a conventional transmission.

CarManuals2.com

Control of the winter program

A winter program is automatically selected when the vehicle is operated on slippery road surfaces (snow and ice). When this program is active, the transmission starts in 2nd gear and shifts into the higher gears earlier. This program improves response under winter driving conditions by providing enhanced traction and vehicle stability.

ATC leaves the winter program when it registers a high-traction road surface, when the Sport program is selected and when ASC+T/DSC is deactivated.

Electronic transmission control module

If the message "TRANS. FAILSAFE PROG" appears in the Check Control, there is a fault in the gearshift electronic system or in the transmission itself.

Bring the vehicle to a stop, select transmission position "P", set the parking brake and turn the engine off (ignition key to position 0).

Wait a few seconds, then start the engine. If the indicator lamp goes out after a few seconds, normal transmission performance has been restored. Drive off normally.

If the indicator lamp does not go out, all selector lever positions can still be selected, however in the forward positions the vehicle has limited performance as it drives only in 3rd or 4th gear.

Under these circumstances, avoid extreme engine loads and consult the nearest authorized BMW center.

⚠ Do not work in the engine compartment when a drive gear (forward or reverse) is engaged. If you do this, the vehicle could move.◀

For towing and jump-starting the vehicle, refer to pages 183, 184.

Automatic transmission with Steptronic*

You may drive your vehicle as with a typical automatic transmission, but you may also shift manually.

When you move the selector lever to the left from position "D" and into the M/S shift level, the performance-oriented shift programs of the automatic transmission are activated. As soon as you move the selector lever in the "+" or "–" direction, Steptronic changes the gear and the manual mode is active. If you wish to utilize automatic shifting once again, move the selector lever to the right and into the D position.

The automatic transmission of your BMW is equipped with an Adaptive Transmission Control (ATC). This system reacts with precision to your individual driving style and the current driving conditions. Different shift programs are utilized to achieve this.

For details concerning ATC, please refer to the chapter describing "Advanced technology" on page 188.

Selector lever positions

P R N D M/S + –

Starting the engine

The engine can only be started in selector lever positions P ("Park") or N ("Neutral").

Range selection

A detent prevents inadvertent shifts into some selector lever positions. To release the shift-lock mechanism, press the button on the front of the selector handle (arrow).

▷ While the vehicle is stationary and before shifting out of "Park" or "Neutral," depress the footbrake in order to disengage the selector lever's lock mechanism (shift-lock).
Hold the footbrake down until starting off. Otherwise, the vehicle will "creep" when a drive position is engaged.◀

Online Edition for Part No. 01 41 0 004 597 - © 08/99 BMW AG

Before exiting the vehicle when the engine is running, place the selector lever in the "Park" or "Neutral" position and apply the parking brake. If you do not, the vehicle can move.
Do not leave the car unattended with the engine running. An unattended vehicle with a running engine represents a potential safety hazard.◀

P – Park

Select "Park" only when the vehicle is stationary. The transmission locks to prevent the rear wheels from turning.

R – Reverse

Select "Reverse" only when the vehicle is stationary.

CarManuals2.com

N – Neutral

Select "Neutral" only if your journey is interrupted for a long period.

D – Drive (automatic shift program)

This position is designed for driving under all normal operating conditions. All forward gears are available.

"Kickdown"

In the "Kickdown" mode, you achieve maximum engine performance.
Press the accelerator pedal past the increased resistance point at the full-throttle position.

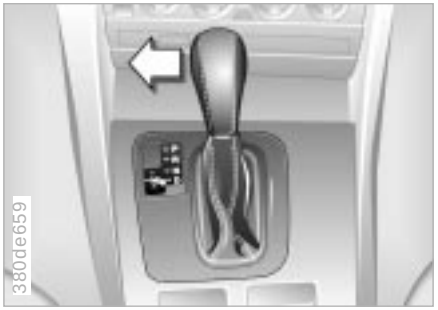

M/S – Manual mode and Sport Program

When you change from "D" to M/S, the Sport program is activated. This is indicated by "D S" in the gear display. This position is recommended if your driving style is performance-oriented.

With the first brief touch, the automatic transmission shifts from the Sport program to manual mode.
When you move the selector lever forward in the "+" direction, the transmission shifts up. When moved back in the "–" direction, the transmission shifts down.
Depending on the version, "1 to 5" or "M1 to M5" appears in the gear display.

Online Edition for Part No. 01 41 0 004 597 - © 08/99 BMW AG

The ATC will execute upshifts or downshifts only at appropriate engine and road speeds. For example, the transmission does not shift down when the engine speed is too high. The selected gear will appear briefly in the instrument cluster, followed by the current gear.

To accelerate quickly in the manual mode (to pass another vehicle, for instance), shift down manually or use the kickdown.◀

You can only change from M/S to the selector lever positions "P," "R" and "N" via the "D" position.

In the following situations, the Steptronic "thinks" for you in the manual mode:

- In order to prevent engine overspeeding, the transmission shifts automatically to the next higher gear shortly before the RPM cutoff point
- At low speeds, the transmission shifts down automatically - you do not have to act
- In the kickdown mode, the transmission shifts down to the lowest possible gear based on the engine speed
- Depending on the situation – when driving in adverse winter conditions, for example – you may also start out in 2nd or 3rd gear.

Electronic transmission control module

If the "TRANS. FAILSAFE PROG" message appears in the Check Control, there is a malfunction in the transmission system.

Bring the vehicle to a stop, select transmission position "P", set the parking brake and turn the engine off (ignition key to position 0).

Wait a few seconds, then start the engine. If the indicator lamp goes out after a few seconds, normal transmission performance has been restored. Drive off normally.

If the indicator lamp does not go out, all selector lever positions can still be selected, however in the forward positions the vehicle has limited performance as it drives only in 3rd or 4th gear.

Under these circumstances, avoid extreme engine loads and consult the nearest authorized BMW center.

Do not work in the engine compartment when a drive gear (forward or reverse) is engaged. If you do this, the vehicle could move.◀

CarManuals2.com

For towing or jump-starting the vehicle, refer to pages 183, 184.

1 High beam (blue indicator)

2 Headlamp flasher (blue indicator)

3 Turn signal (green indicator accompanied by a rhythmic clicking sound from the relay)

If the indicator lamp and the clicking from the relay are both faster than normal, one of the turn indicators has failed.

To signal briefly

Press the lever up to but not beyond the detent. It then returns to the center position when released.

Online Edition for Part No. 01 41 0 004 597 - © 08/99 BMW AG

0 Wipers retracted

1 Intermittent wipe or rain sensor*

2 Normal wipe

3 Fast wipe

4 Brief wipe

5 Automatic windshield washer

6 Rotary dial for control of the interval time or the sensitivity of the rain sensor

0 Wipers retracted

The wipers are partially hidden behind the hood. To bring the wipers up into their vertical position (important when changing the blades, or folding up when frost is expected):
With the control lever in position 1, switch off the ignition when the wipers are in the parked position.

If equipped with the rain sensor:

▷ Switch the wipers on (control lever 1, 2 or 4)

▷ When the wipers are in an approximately vertical position, switch off the ignition.

CarManuals2.com

⚠ Fold the wipers back onto the windshield before turning the ignition key to position 1 or 2. If you do not, they could be damaged.

For changing the wiper blades, refer to page 166.

1 Intermittent wipe or rain sensor*

Intermittent wipe:

You can use rotary dial 6 to select from four wiper intervals.
In addition, the wipe interval automatically adapts to variations in road speed.

Rain sensor:

When the rain sensor is activated, the windshield wiper is controlled automatically, depending on the degree of wetness of the windshield (in both snow and rain). You do not have to be concerned with switching the windshield wiper on or off or adjusting the wipe interval between intermittent and full wipe. Instead, you can concentrate fully on the traffic conditions.

This is especially important under adverse weather conditions.
The rain sensor is located on the windshield, directly in front of the interior rearview mirror.

To activate the rain sensor:
From ignition key position 1 and up, move the lever to position 1. The wipers travel once across the windshield, regardless of the weather.

You can also leave the lever permanently in position 1. It is then only necessary to activate the rain sensor from ignition key position 1 and up. To do this

- ▷ turn rotary dial 6 briefly or
- ▷ use the automatic windshield washer 5.

To modify the sensitivity of the rain sensor:
Turn rotary dial 6.

⚠ Turn the rain sensor off in automatic car washes. If you do not, damage may occur if the wipers switch on unintentionally.◀

2 Normal wiper speed

When the vehicle is stationary, the wipers switch automatically to intermittent wipe (not on vehicles with rain sensor).

3 Fast wiper speed

When the vehicle is stationary, the wipers operate at normal speed (not on vehicles with rain sensor).

5 Automatic windshield washer

The system sprays washer fluid against the windshield and activates the wipers for a brief period.

If you only pull the lever briefly, the system sprays washer fluid onto the windshield without activating the wipers.

Headlamp washers*

If the headlamps are on, they will also be cleaned every fifth time you activate the automatic windshield washer.

⚠ Do not use the washers if there is any danger that the fluid will freeze on the windshield, otherwise vision could be obscured. For this reason, use an antifreeze agent. Refer to page 148.
Do not use the washers when the reservoir is empty, since this could cause damage to the washer pump.◀

Windshield washer jets

The windshield washer jets and the windshield in the wiper sweep area are defrosted automatically when the ignition key is in position 2.

CarManuals2.com

Rear window defroster

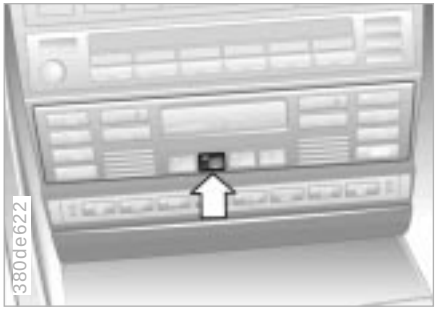

To activate

Press the button: The rear window defroster continues high-output operation for as long as the indicator lamp remains on (rapid thaw).

After the indicator lamp goes out, the defroster continues operating at reduced power for a limited period before deactivating automatically.

To deactivate

If the indicator lamp is on, press the button.

Cruise control

You can store and automatically maintain any desired vehicle speed above approx. 20 mph (30 km/h).

To activate the system

CarManuals2.com

In ignition key positions 1 and 2:
Press button 4, the indicator lamp in the instrument cluster comes on. You can now use the cruise control.

To store and maintain speed or to accelerate

Press button 1 briefly:
The system records and maintains the current vehicle speed. Every time you tap the button, the speed increases by approx. 0.6 mph (1 km/h).

Press and hold button 1:
The vehicle accelerates without pressure on the accelerator pedal. When you release the button, the system records and maintains the current speed.

▷ If, on a downhill gradient, the engine braking effect is not sufficient, the controlled speed can be exceeded. Speed may not be maintained on uphill grades if the engine output is insufficient.◀

To decelerate

Press button 2 briefly:
When the cruise control is active, vehicle speed is reduced by approx. 0.6 mph (1 km/h) every time you briefly press the button.

Press and hold button 2:
With the cruise control active, the system automatically reduces the throttle opening to slow the vehicle. When you release the button, the system records and maintains the current speed.

To interrupt the cruise control

When the system is activated, press button 4. The indicator lamp stays on. You can use the cruise control again as desired.

In addition, cruise control is canceled automatically:

- When you apply pressure to the brake pedal
- If the automatic transmission selector lever is moved from "D" to "N"
- If you exceed or fall below the programmed speed for an extended period (by depressing the accelerator, for example).

To resume the stored setting

Press button 3:
CarManuals2.com
The vehicle accelerates to and maintains the last speed stored. When you turn the ignition key to position 0, the stored speed is deleted from the system's memory and the system is deactivated.

To deactivate the system

When the cruise control has been canceled, press button 4 again. The indicator lamp goes off and the memorized speed is canceled.

Do not use cruise control on twisting roads, when high traffic density prevents driving at a constant speed, when the road surface is slick (snow, rain, ice), or when the road surface is loose (rocks or gravel, sand).◀

Odometer, outside temperature display

1 Odometer

You can activate the displays shown in the illustration with the ignition key in position 0 by pressing the button in the instrument cluster (arrow).

2 Trip odometer

To reset the trip odometer to zero, press the button (arrow) with the ignition key in position 1 or 2.

3 Outside temperature display

The outside temperature appears in the display panel as soon as you turn the ignition key to position 1.

You can change the units of measure (°C/°F) by

1 pressing and holding down the button (arrow) with the ignition key in position 1
2 while turning the ignition key to 0.

Ice warning

If the outside temperature drops to approx. +37.5 °F (+3 °C), a warning signal sounds and the display flashes briefly.

The warning is repeated whenever the temperature goes to at least +43 °F (+6 °C), and then drops to +37.5 °F (+3 °C) again.

CarManuals2.com

The ice warning does not alter the fact that surface ice can form at temperatures above +37.5 °F (+3 °C), on bridges or shaded road surfaces, for instance.◀

Tachometer

Never allow the engine to operate with the needle in the red overspeed zone of the gauge.

To protect the engine, the engine-management system automatically interrupts the fuel supply in this range; the resulting effect resembles that associated with a sudden loss of power.

Online Edition for Part No. 01 41 0 004 597 - © 08/99 BMW AG

Energy control

Indicates current fuel consumption in mpg (in liters per 100 km on Canadian vehicles). This instrument clearly shows whether your current driving style is conducive to economy and minimum exhaust emissions.

When the vehicle is stationary, the display goes to "Maximum" (zero on Canadian models).

Fuel gauge

CarManuals2.com

When you switch on the ignition, the indicator lamp comes on briefly to confirm that the system is operational.

If the indicator lamp stays on, there are approx.

- ▷ BMW 740i/L 2.6 gallons (10 liters)
- ▷ BMW 750iL 3.2 gallons (12 liters)

remaining in the tank.

Tank capacity: Refer to page 201.

Certain operating conditions (such as those encountered in mountainous areas) may cause the needle to fluctuate slightly.

⚠ Please refuel early, since driving to the last drop of fuel can result in damage to the engine and/or catalytic converter.◀

Temperature gauge

Blue

The engine is still cold. Drive at moderate engine and vehicle speeds.

Red

When you switch on the ignition, the warning lamp comes on briefly to confirm that the system is operational.

Lights up while driving, or the message "COOLANT TEMPERATURE" appears in the Check Control: The engine is overheated. Switch the engine off immediately and allow it to cool down.

Between the blue and red zones

Normal operating range. It is not unusual for the needle to rise as far as the edge of the red zone in response to high outside temperatures or severe operating conditions.

Checking coolant level: Refer to page 151.

CarManuals2.com

Service Interval Display

Green lamps

The number of illuminated lamps decreases as the time for your next maintenance visit approaches.

Yellow lamp

This field appears together with OILSERVICE or INSPECTION.

Maintenance is due. Please contact your BMW center for an appointment.

Red lamp

Maintenance is overdue.

Online Edition for Part No. 01 41 0 004 597 - © 08/99 BMW AG

System malfunctions are reported in text form and alerts or warnings are each reported by a gong when the ignition key is in position 2.

1 CHECK button

2 Status report symbol

3 Display

Messages concerning system faults are differentiated based on two priorities:

Priority 1

These defects are immediately indicated by a gong and a flashing warning symbol (2). Several simultaneous defects will be displayed consecutively. These messages remain active until the malfunction is corrected. They cannot be cleared with CHECK button (1).

▷ RELEASE PARKING BRAKE
This message appears together with an acoustic signal any time you begin to drive and the parking brake is applied.

▷ COOLANT TEMPERATURE
Coolant overheated. Stop the vehicle and switch off the engine immediately.
Refer to pages 78, 151.

▷ STOP! ENGINE OILPRESS
Oil pressure too low. Stop the vehicle and switch off the engine immediately. Refer to page 20.

▷ CHECK BRAKE FLUID
Indicates that brake fluid is down to roughly minimum level. Top up the brake fluid as soon as possible. Refer to page 152. Have the cause of the brake fluid loss corrected by your BMW center.

▷ FLAT TIRE*
Reduce vehicle speed immediately and stop the vehicle. Avoid hard brake applications. Do not oversteer. Refer to page 98.

▷ LEVEL CONTROL INACTIVE*
Please consult the nearest BMW center. Refer to page 134.

▷ SPEED LIMIT*
This is displayed if the programmed speed limit is exceeded.

Online Edition for Part No. 01 41 0 004 597 - © 08/99 BMW AG

Priority 2

These alerts for problems are reported for 20 seconds when the ignition key is in position 2. The status reports remain after the message disappears. You can view the message again by pressing the CHECK button (1).

- TRUNK LID OPEN
  This message is given only when initially starting off.
- DOOR OPEN
  This is displayed after a minimum vehicle speed is exceeded.
- FASTEN SEAT BELTS*
  In addition, the indicator lamp with the safety belt symbol appears and an acoustic signal is heard.
- WASHER FLUID LOW
  The washer fluid is too low. Top up the fluid at the earliest opportunity. Refer to page 148.
- CHECK ENGINE OIL
  Add engine oil as soon as possible. Refer to page 149.
- OUTSIDE TEMPERATURE 24 °F (–5.0 °C)
  This display is only an example. The current reading appears at an outside temperature of 37.5 °F (+3 °C) and below. Refer also to page 76.
- TIRE PRESSURE SET*
  The RDC has imported the current inflation pressure in the tires as the target values which the system will monitor.
  Refer to page 98.
- CHECK TIRE PRESSURE*
  Check and correct the tire inflation pressure to specifications at the earliest opportunity (next stop for fuel). Refer to page 98.
- TIRE CHECK INACTIVE*
  A temporary interference of the RDC or a system fault. Refer to page 99.
- BRAKE LAMP CIRCUIT
  A bulb has failed or the circuit has a malfunction. Refer to pages 170, 179 or consult a BMW center.
- CHECK LOWBEAMS
  CHECK SIDE LAMPS
  CHECK REAR LAMPS
  CHECK FRONT FOGLAMPS
  CHECK LICPLATE LAMP
  CHECK TRAILER LIGHTS
  CHECK HIGHBEAMS
  CHECK BACKUP LAMPS
  Defective bulb or circuit. Refer to pages 167, 179 or consult a BMW center.
- TRANS. FAILSAFE PROG
  Please consult the nearest BMW center. Refer to pages 68, 71.
- CHECK BRAKE LININGS
  Have the brake pads inspected by your BMW center. Refer to page 132.
- CHECK COOLANT LEVEL
  The coolant is too low. Top up at the next opportunity. Refer to page 151.
- ENGINE FAILSAFE PROG
  Fault in the Electronic Engine Power Control EML. When braking, higher brake application pressure may be necessary and brake pedal travel may be significantly longer.
  Please have the system inspected by your authorized BMW center.

CarManuals2.com

Displays after completion of trip

All of the malfunctions registered during the trip appear consecutively when the ignition key is turned to position 0.

One of the following displays may appear:

- ▷ LIGHTS ON
- ▷ KEY IN IGNITION LOCK
- ▷ CHECK ENGINE OIL LEV
  Add engine oil at the next opportunity (next stop for fuel). Refer to page 149.

This message appears when you open the driver's door after parking the vehicle. A supplementary gong is also heard.

Even if the ignition key has been removed and the display has gone off, you can still retrieve these messages with CHECK button (1) for approx. three minutes after completion of your trip. If there are multiple messages, continue to press the CHECK button.

To monitor the Check Control

With the ignition key in position 2, press CHECK button (1):

CHECK CONTROL OK appears in the display.

In this case, there are no faults in the systems which are monitored.

CarManuals2.com

Multi-Information Display (MID)

The MID serves as a central control and display unit for the following vehicle systems:

- ▷ Digital clock (time, date, independent ventilation system)
- ▷ Sound system (radio, cassette, CD player*)
- ▷ Onboard computer (such as fuel consumption, cruising range)
- ▷ Cellular phone* (dialing, for instance)

Sound system, digital clock, onboard computer and cellular phone

On the following pages you will find explanations and information on how to use the digital clock and the onboard computer. Information on using the sound system and the telephone are contained in the Supplementary Operating Instructions.

▷ Implausible numbers are not accepted.

Any interruption in power supply will result in the loss of all stored data. After the power supply is restored, you will need to reset the time as well as any additional program data for the independent ventilation system, distance or speed warning threshold.◀

CarManuals2.com

Digital clock

CarManuals2.com

From ignition switch position 1, you can make use of the following functions:

- ▷ Time and date
- ▷ Program an hourly reminder (memo), for instance, to remind you of news broadcasts
- ▷ Independent ventilation system.

1 Sound system display (refer to the Supplementary Operating Instructions)

2 Display for time and date

3 Tone symbol for active memo function

4 Sound system function key

5 Function key for the digital clock and onboard computer

6 Entry and data-request keys for sound system, digital clock and onboard computer

7 Display for entry and data-request keys

To display the time and date

Press the digital clock function key.

When the ignition key is in position 0 or removed, the time appears for eight seconds; from ignition key position 1, the time remains in the display.

Press the DATE key with the time activated to display the date.

To display the time again, press the digital clock function key.

You can display the time in either a 12- or 24-hour scale. To change setting:

1 Press the digital clock function key
2 Press the scale selection key (12H/24H).

When you select the 12-hour mode, AM or PM will appear on the right-hand side of the display panel.

Digital clock

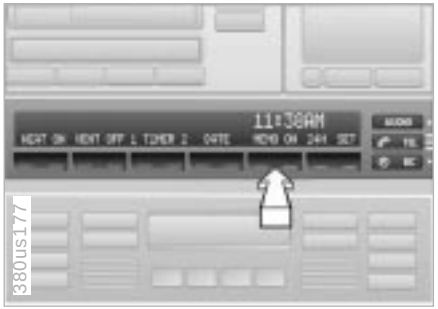

Programming a reminder signal

1 Press the digital clock function key
2 Press MEMO ON/OFF to activate/de-activate the hourly signal.

When MEMO ON is active, a tone symbol appears in the display and an acoustic signal is provided 15 seconds before each full hour.

To reset the time

1 Press the digital clock function key
2 Press the SET key; the dots in the display start to flash
3 Enter the correct time with the – HRS + and – MIN + input keys
4 Confirm your entry by pressing the SET key.

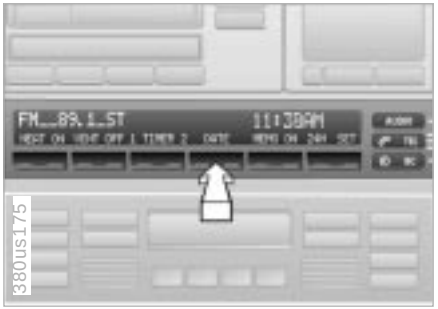

To reset the date

1 Press the digital clock function key
2 Press the DATE key.

The dots in the display and the word DATE start to flash.

CarManuals2.com

3 Enter the date with the – DAY +, – MONTH + and – YEAR + input keys
4 Confirm your entry by pressing the SET key.

Leap years are programmed into the system and therefore need not be taken into account.

To enter the time and date after a power loss

1 Press the digital clock function key

The dots in the display start to flash.

2 Enter the correct time with the – HRS + and – MIN + input keys
3 Press the SET key. The clock starts
4 Enter the date with the – DAY +, – MONTH + and – YEAR + input keys
5 Press the SET key.

Independent ventilation system

To enter activation times

You can preselect two different activation times for the independent ventilation system. The system switches off automatically after 30 minutes.

Refer to page 111 for important information on using the independent ventilation system.

CarManuals2.com

To enter the first activation time

Before you can enter data, the ignition key must be at position 1 and the digital clock must be visible in the display.

1 Press the keys as shown in the illustration
2 Press the SET key.

TIMER 1 flashes in the display.

3 Use the – HRS + and – MIN + keys to enter the correct time
4 Confirm your entry by pressing the SET key.

An asterisk appears next to the time and the LED to the right of the BC key comes on.

To enter the second activation time

The procedure is the same as that for setting the first activation time, except you will press TIMER 2 for your selection.

To correct the time

To enter a different time, press the keys in the sequence described for the first/second activation times.

Calling up a preselected time

▷ For the first activation time, press the keys in the sequence shown in the illustration on the left
▷ For the second activation time, follow the same key sequence and press TIMER 2 key for your selection.

Activating/Deactivating switch-on times

After pressing the digital-clock function key, the entered activation times can be activated and deactivated by pressing the keys TIMER 1 or TIMER 2.

When active, the LED to the right of the BC key comes on and an asterisk appears at the left next to the time.

The times remain stored until they are replaced by subsequent entries.

CarManuals2.com

Ventilation mode

During ventilation, the LED to the right of the BC key flashes and AIR OFF appears in the display. Pressing this key switches off the ventilation mode and the LED goes out.

When a preselected activation time is set, the independent ventilation system is operational at outside temperatures above 60 °F (16 °C), or by direct switch activation. It cannot be switched on when the vehicle is moving.◀

Direct control

Available only with ignition key at position 1.

Press the keys (AIR ON/AIR OFF) in the sequence shown in the illustration.

CarManuals2.com

The onboard computer operates at ignition key positions 1 and 2.

Information for safe and economical driving can be called up for display.

You can use the key with the clock symbol to

- ▷ display the time and date
- ▷ program an hourly reminder signal (Memo), to remind you of the next news broadcast, for instance
- ▷ operate the independent ventilation system.

Refer to page 83 for information and details on using the digital clock.

1 Sound system display (refer to the Supplementary Operating Instructions)

2 Sound system function key

3 Function key for digital clock and onboard computer

4 Entry and data-request keys for sound system, digital clock and onboard computer

5 Display for entry and data-request keys

CarManuals2.com

Standard displays (no previous data entries required)

		Page
1 CONSUM 2	Two different average fuel consumption calculations	89
RANGE	Estimated cruising range	89
SPEED	Average speed	90

With previous data entries

DISTANCE-ARR	The remaining distance to the destination with the estimated time of arrival	90
LIMIT	Speed warning threshold	91
CODE	Code	92

In the interest of driving safety, you should always enter data with the vehicle parked/stationary. The onboard computer starts its calculations as soon as the vehicle starts to move.

You can also use the remote control unit to select information for display. Refer to page 93.

Online Edition for Part No. 01 41 0 004 597 - © 08/99 BMW AG

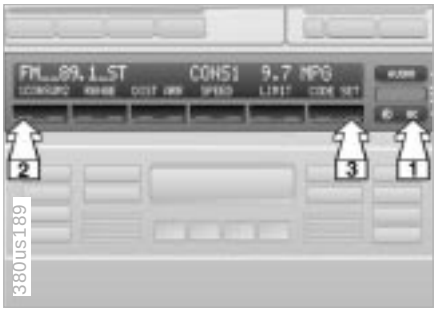

Average fuel consumption

The computer can calculate average fuel consumption rates for two different distances at the same time (simultaneous data for an entire journey and for a single segment of it, for instance).

To start calculations for distance 1:
Press the keys in the sequence shown in the diagram.

To start calculations for distance 2:
The procedure is the same as that for the first distance, except you will press CONSUM 2 for your selection.

The computer starts calculating fuel consumption as soon as you start driving.

Data request:
Press the BC key and CONSUM 1 or 2.

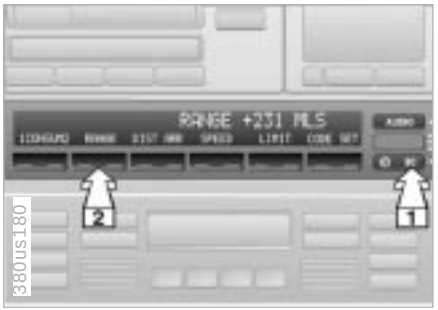

Estimated cruising range

Displays the estimated travel range available with the remaining fuel. The system calculates the cruising range based on operating conditions and the amount of fuel remaining in the tank. The computer uses the average rate of fuel consumption over the preceding 18 miles (30 kilometers) as a reference.

Data request:
Press the keys in the sequence shown in the illustration.

A range of under 31 miles (50 kilometers) is displayed in the Check Control in the instrument cluster.

Please respond to this warning by refueling at once to avoid serious damage to the engine and catalytic converter.

When you refuel, the onboard computer registers the additional fuel only when more than 1.5 gallons (5 liters) are added.

CarManuals2.com

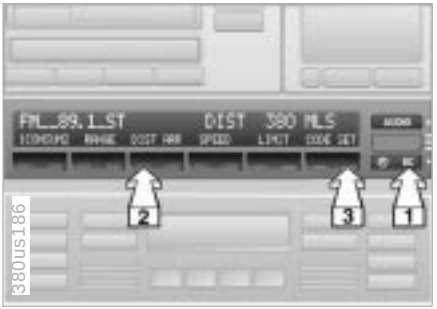

Average speed

To start calculations:
Press the keys in the sequence shown in the illustration.

Calculations begin after you start off.

Data request: Press BC and SPEED key.

The display shows your average speed since the last time the SET key was pressed. Calculations are interrupted whenever you shut down the engine.

At speeds below 100 mph (100 km/h), the display includes decimals.

Distance remaining to destination

Data request:
Press BC and DIST.

Displays the distance to the destination. Available only if the total distance was entered before the start of the journey.

To enter the distance

Press the keys in the sequence shown in the illustration on the left.

The miles flash in the display.

Enter the distance with keys 0 – 9 and confirm with the SET key.

Use the CLR key to make corrections. Press once to delete the final digit.

Any additional mileage extending beyond the total defined in the initial entry is indicated by a minus sign.

CarManuals2.com

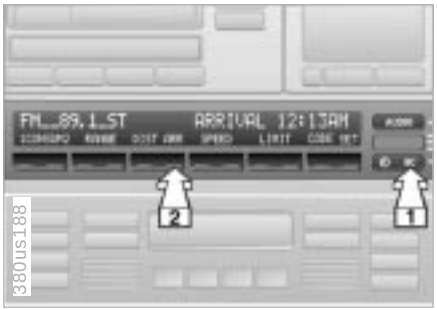

Estimated time of arrival

Data request:
Press the keys in the sequence shown in the illustration.

Shows the estimated arrival time based on current driving speed.

Functions only when you enter the trip distance (DIST) before the start of the journey.

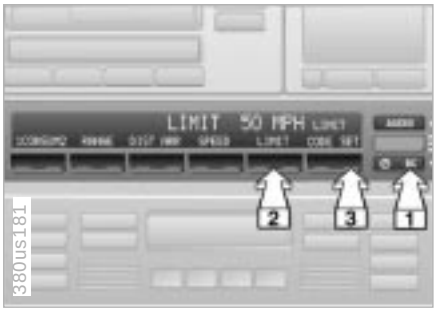

Speed warning threshold (Limit)

Entry of a speed warning threshold (Limit) will be indicated by the word LIMIT at the right in the display.

CarManuals2.com

Alerts you when you exceed the maximum speed that you entered earlier (for instance, posted speed limit). Triggers an acoustic signal, LIMIT flashes on the right-hand side of the display, and the stored limit appears in the instrument cluster Check Control display panel for approximately 3 seconds.

Vehicle speed must drop back to at least 3 mph (5 km/h) below the programmed speed warning threshold to reset the system for repeat warnings.

To enter the speed warning threshold

Press the keys in the sequence shown in the illustration on the left.

The word MPH flashes in the display. Enter the speed warning threshold with the 0 – 9 keys and confirm with the SET key.

Use the CLR key to make corrections. Press once to delete the final digit.

To deactivate the speed warning

▷ Press BC and then press LIMIT twice.

The word LIMIT on the right side of the display disappears, however the value remains stored and can be reactivated using the LIMIT key.

To adopt the current speed as the limit

Press BC, LIMIT and SET twice.

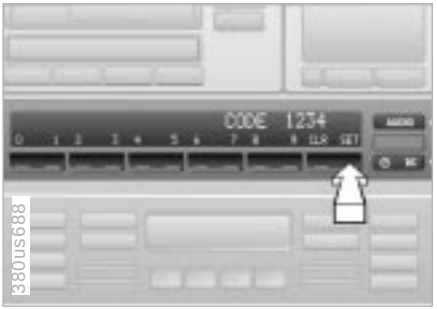

Code

You can program a code into the on-board computer for supplementary protection against unauthorized attempts to start the engine or tamper with the vehicle. This feature provides you with an extra measure of security extending beyond that furnished by the vehicle immobilization system (refer to page 33).

The system prevents the engine from starting.

A code number is used to arm the system. The code is then required for subsequent starting attempts. Therefore: Always remember the code number.

With the ignition key in position 1, press the keys in the sequence shown in the illustration. "CODE – – – –" will appear in the display.

Turn the ignition key to position 1 to set

1 Use the 0 – 9 keys to enter the code
2 Press the SET key
3 Turn the ignition key to position 0 or remove it.

If you press a different key of the on-board computer before you turn the ignition key to the 0 position, or if you turn the key to position 2, the code which has been entered will be deleted.

Code numbers from "0000" to "9999" can be entered.

The code must be re-entered each time the system is armed.

You can make corrections of the entered numbers with the CLR key.

CarManuals2.com

To cancel with the ignition key at position 1 or 2

A gong and the "CODE – – – –" display prompt the code entry.

1 Use the keys to enter the code number
2 Press the SET key.

The system responds to attempts to start the vehicle using an incorrect/no code by preventing the engine from starting.

The time automatically appears after you enter the correct code and then confirm it by pressing SET.

Three incorrect entries will cause the alarm to sound for 30 seconds.

Remote control

You can display all information for the onboard computer and digital clock with the switch in the turn signal lever. You can also display selected information in the Check Control in the instrument cluster following specific entries.

To enter:

1 Press the control in the turn signal lever until "Prog 1" appears in the display
2 Press the buttons on the MID in the sequence in which you want the information to be displayed.
The program number is counted in the display every time information is stored
3 Press the SET key.

If you wish to display all data:

1 Press the control in the turn signal lever until "Prog 1" appears in the display
2 Press the SET key.

Data request:
Briefly press the switch in the turn signal lever for each data request.

CarManuals2.com

Park Distance Control (PDC)*

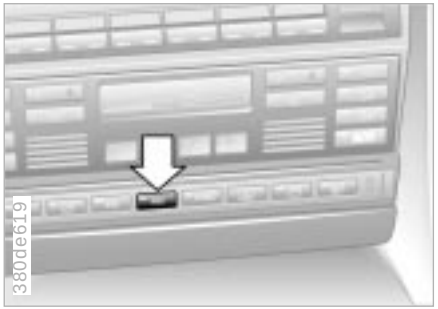

The PDC assists you when you are parking. Acoustic signals warn you of the distance to an obstacle. In addition, four ultrasonic sensors in each the front and rear bumpers measure the distance from the nearest object. The monitoring range for the four front sensors and that of the two rear corner sensors ends approx. 2 ft (60 cm) beyond the respective bumper. The two center sensors cover a distance of approx. 5 ft (1.50 m).

The system starts to operate automatically about one second after you move the selector lever to "R" when the ignition key is in position 2. It is similarly deactivated when you move the selector lever position from the "R" position. The indicator lamp in the button (arrow) comes on to signal the active status.

CarManuals2.com

Manual activation/deactivation is possible using the button in the center console (arrow) (indicator lamp comes on/goes out). The system deactivates once the vehicle travels approximately 160 ft (50 m) or exceeds a speed of about 18 mph (30 km/h). It must then be switched on again as desired.

Acoustical signals

The distance to an obstruction in the front is indicated by a higher interval tone, while the distance to an obstruction in the rear is indicated by a deeper tone. As the distance between vehicle and object decreases, the intervals between the tones become shorter. A continuous tone indicates the presence of an object less than 1 ft (30 cm) away.

The warning signal is canceled after approx. three seconds if the distance to the obstruction remains constant during this time (if you are moving parallel to a wall, for instance).

System malfunctions are indicated by a short, continuous tone and a flashing indicator lamp (indicator lamp only when the system is activated by shifting the transmission into "R").

Switch the system off and consult a BMW center to have the problem corrected.

Online Edition for Part No. 01 41 0 004 597 - © 08/99 BMW AG

The PDC does not remove the driver's personal responsibility for evaluating the distance between the vehicle and any obstacles. Even when sensors are involved, there is a blind spot in which objects cannot be detected. This applies especially in those cases where the system approaches the physical limits of ultrasonic measurement, as occurs with tow bars and trailer couplings, and in the vicinity of thin and painted objects.
Certain sources of sound, such as a loud radio, could drown the PDC signal tone.◀

Keep the sensors clean and free of ice or snow in order to ensure that they continue to operate effectively. Do not apply high-pressure spray to the sensors for a prolonged period of time. Maintain an adequate distance of more than approx. 4 inches (10 cm).◀

CarManuals2.com

Automatic Stability Control plus Traction (ASC+T)/Dynamic Stability Control (DSC)

These systems help provide additional dynamic stability, particularly when accelerating and cornering.

The DSC system enhances the benefits of the ASC+T. In addition to optimizing vehicle stability and traction when accelerating or starting from a standstill, another benefit is realized in cornering stability. Of course, this is subject to the limits imposed by the laws of physics.

The system starts up automatically each time you start the engine.

Indicator lamp

The indicator light in the instrument cluster goes out shortly after you switch on the ignition. Refer to page 21.

Indicator lamp flashes:
The system is active and governs drive force and braking force.

If the indicator lamp fails to go out after the engine is started, or comes on during normal driving and stays on:
There is a system malfunction or the system was deactivated with the button. You can continue to drive the vehicle normally, but without DSC.
Consult your BMW center to have the system repaired.

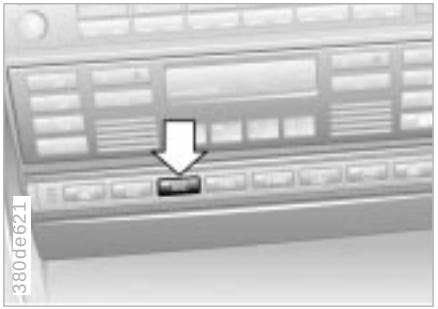

To deactivate the system

Press the button (arrow); the indicator lamp comes on and stays on.

Depending on equipment options, the button is marked with ASC or DSC.

With deactivated ASC+T/DSC you are driving with conventional, unregulated torque transfer.

In the following exceptional circumstances, it may be effective to deactivate the DSC for a short period:

- When rocking the vehicle or starting off in deep snow or on loose surfaces
- When driving with snow chains. Refer also to page 133.

CarManuals2.com

Electronic Damper Control (EDC)*

To reactivate the system

Press the button again; the indicator lamp goes out.

The laws of physics cannot be repealed, even with DSC. An appropriate driving style always remains the responsibility of the driver. We therefore urge you to avoid using the additional safety margin of the system as an excuse for taking risks.◀

For additional details concerning ASC+T/DSC, please refer to the chapter describing "Advanced technology" on page 189.

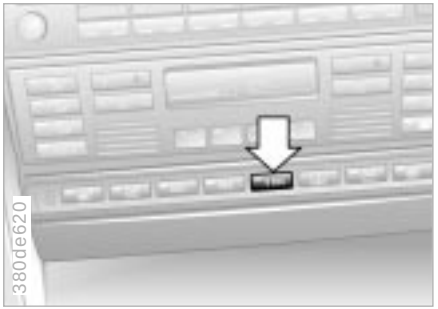

The system automatically ensures damping of the running gear on demand and thus increases comfort and driving safety.

Automatic adaptation

Automatic adaptation is activated after every engine start. It can be maintained throughout the entire vehicle speed range and for all load conditions. If operating parameters (road-surface quality, driving conditions such as steering, braking, others) change, the damping system adapts automatically to the new factors in fractions of a second.

Sport program

With the ignition key in position 2, press the EDC button (arrow). The indicator lamp next to the S comes on.

The Sport program should be invoked when you wish to have strictly performance-oriented tuning of the running gear under all operating conditions.

To switch to automatic adaptation: Press the button again; the indicator lamp goes out.

CarManuals2.com

Tire Pressure Control (RDC)*

The concept

RDC monitors the tire pressures at all four wheels, even when the vehicle is moving. The system provides an alert whenever the inflation pressure drops significantly below the specified pressure in one or more tires.

In order for the RDC to "learn" the correct tire inflation pressure, check the inflation pressure in all tires. Refer to the table of "Tire inflation pressures" on page 29 and make corrections if necessary. Then activate the system.

The Check Control will inform you if the tire pressure is not correct.

CarManuals2.com

Activate the system

1 Turn the ignition key to position 2 (do not start the engine)
2 Press and hold the button (arrow) until the message "SET TIRE PRESSURE" appears in the Check Control
3 After you have driven for a few minutes, the RDC will import the current inflation pressure in the tires as the target values which the system will monitor.

You will only have to repeat this procedure if the tire inflation pressure must be corrected. Otherwise, the RDC functions automatically when the ignition key is in position 2, and thus operates whenever the vehicle is driven.

Loss of tire pressure

If, after a certain period of time, the air pressure has gone down significantly (which is normal for any tire), the message "CHECK TIRE PRESSURE" appears in the Check Control.

This alerts you that you should have the tires inflated to the specified pressures as soon as possible.

▷ If you are prompted to check the tire pressure shortly after a correction has been made, this indicates that the corrected values were not accurate. Please check the inflation pressure again and make corrections according to the inflation pressure table.◀

Flat tire

If there is a tire failure with a loss of air pressure, the message "TIRE DEFECT" appears in the Check Control. In addition, a gong sounds.

If this occurs, reduce vehicle speed immediately and stop the vehicle in a safe location. Avoid hard brake applications. Do not oversteer. Replace the wheel and flat tire.

The spare tire which is available in your vehicle as standard equipment is equipped with the electronics required for RDC and, following activation of the system, is also monitored after it is mounted.◀

The RDC cannot alert you to severe and sudden tire damage caused by external factors.◀

Have the tires changed by your BMW center.
Your BMW center has been trained to work with the RDC system and is equipped with the necessary special tools to do so.◀

CarManuals2.com

System interference

During the period of the malfunction, the message "TIRE CONTROL INACTIVE" appears in the Check Control.

You will also see the same message

- in the event of a system fault
- if a wheel is mounted without the RDC electronics
- if, in addition to the spare tire, additional wheels with RDC electronics are on board.

Please contact your BMW center for additional information.

Parking lamps

With the switch in this position, vehicle lighting is illuminated on both sides. For lighting on one side for parking: Refer to page 101.

Low beams

When you switch the ignition off with the low beam headlamps on, only the side lamps (side marker lamps) will remain on.

When the low beams are switched on, the interior door handles are lighted. The brightness is controlled by the instrument panel lighting.

"Follow-me-home lighting:"
If you actuate the headlamp flasher after you have parked the vehicle and shut off the engine, the low beams will remain on for a brief period. You can also have this function deactivated.◀

CarManuals2.com

"LIGHTS ON" warning

In ignition key position 0, a message appears in the Check Control after the driver's door is opened if the headlamps have not been switched off.

Daytime-running lamp*

The headlamps are automatically switched on for daylight running at ignition key position 2.

Instrument panel lighting

Turn the rotary dial to adjust the illumination intensity.

High beams/Parking lamps

1 High beam

2 Headlamp flasher (blue indicator lamp)

3 Parking lamps

Parking lamp, left or right*

With the ignition key in position 0, engage the lever in the appropriate turn-signal position. The lever engages in the turn signal position.

CarManuals2.com

Fog lamps

Front fog lamps

A green indicator lamp appears in the instrument cluster to indicate that the front fog lamps are on.

If the high beam is switched on, the fog lamps go out.

Online Edition for Part No. 01 41 0 004 597 - © 08/99 BMW AG

Interior lamps

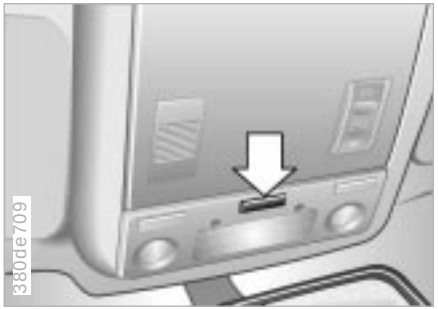

The interior lamps operate automatically.

Switching interior lamps on and off manually

Press the button (arrow).

If you want the interior lamps to remain off continuously, maintain pressure on the button for approximately 3 seconds.

Press the button briefly to revert to normal operation.

The orientation lamps on the right and left of the button for interior lamps come on when the side lamps are switched on.

Footwell lamps

CarManuals2.com

The footwell lamps operate in the same way as the interior lamps.

Reading lamps

The reading lamps are located in the front near the interior lamp and in the rear. They can be switched on and off with the switch adjacent to each lamp.

▷ In order to conserve the battery, all of the lamps in the vehicle are switched off automatically approx. 15 minutes after the ignition key is turned to position 0.◀

Online Edition for Part No. 01 41 0 004 597 - © 08/99 BMW AG

CarManuals2.com

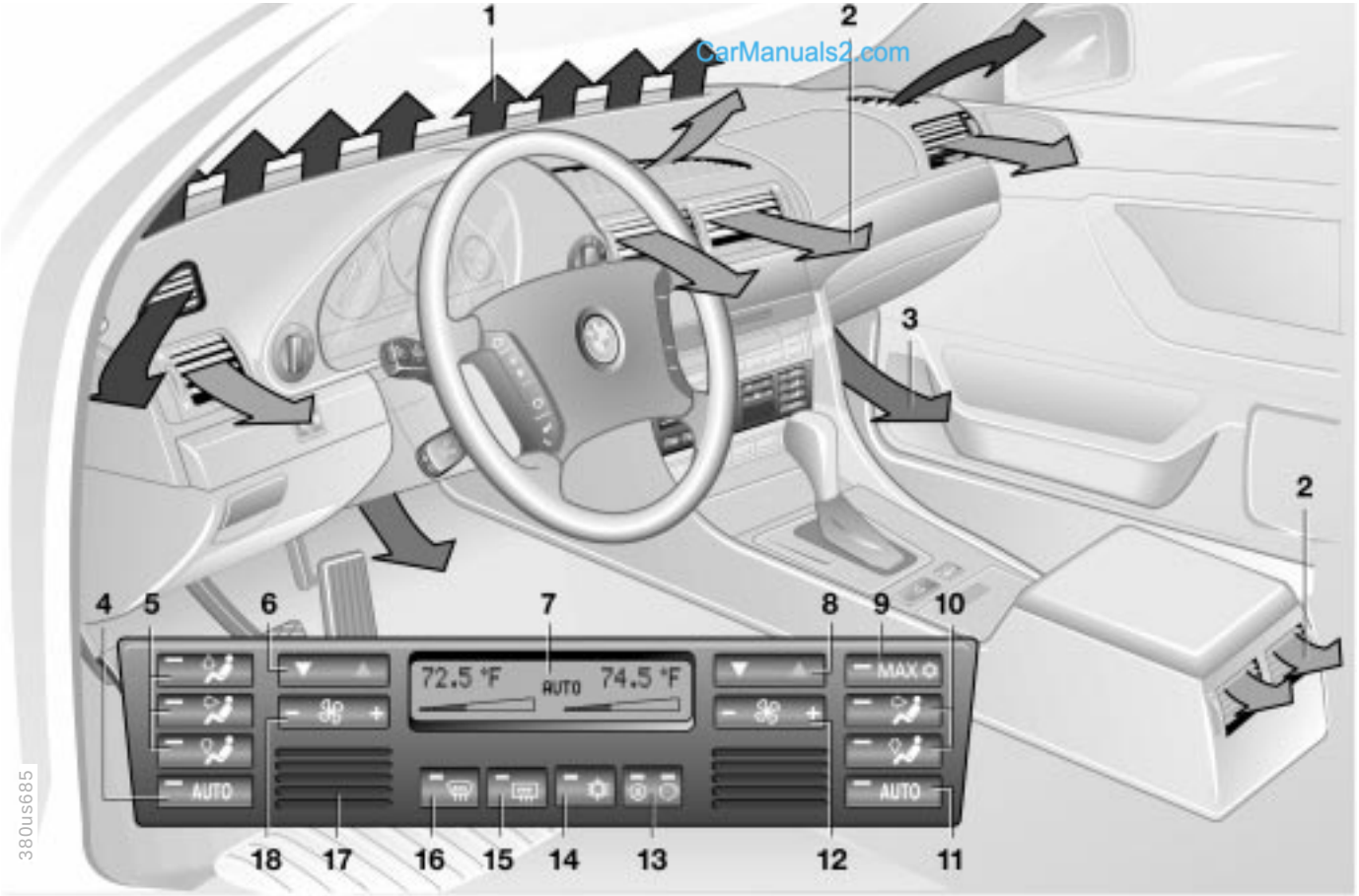

CarManuals2.com

Online Edition for Part No. 01 41 0 004 597 - © 08/99 BMW AG

Automatic climate control

1 Air flow directed against windshield and door windows

2 Air flow toward the upper body
The rotary dials allow infinitely-variable regulation of the air supply, changes in the air-flow direction, and temperature regulation.
(Change air-flow direction in the rear passenger area with the levers in the center of the vent.) In the closed position, air flows out at the upper center of the instrument panel only 108

3 Front footwell ventilation
There are corresponding air vents in the rear footwell as well

4 Automatic air distribution – left-hand side 106

5 Individual air distribution – left-hand side 106

6 Temperature control – left-hand side 107

7 Temperature and air flow display, left- and right-hand sides 107

8 Temperature control – right-hand side 107

9 Cooling and residual heat mode 107, 108

10 Individual air distribution – right-hand side 106

11 Automatic air distribution – right-hand side 106

12 Air supply – right-hand side 107

13 Automatic recirculated-air control (AUC) 107

14 Air conditioner 106

15 Rear window defroster 74, 107

16 Defrosting the windows and remove condensation 106

17 Air grill for interior temperature sensor – please keep clear and unobstructed

18 Air supply – left-hand side 107

CarManuals2.com

Tips for pleasant driving

Use the automatic system, i.e., press AUTO button 4. Select an interior temperature that is comfortable for you – we recommend 72 °F (22 °C) as a comfortable setting. When the outside temperature is above 41 °F (5 °C), you can also use the air conditioning system 14. This will dry the air and prevent window fogging, for example if people are wearing damp clothes in the vehicle. Set the outlets 2 so that the air flows past you and does not flow directly at you. Set the rotary dial between the air outlets 2 for the upper body to a medium position, since air that is somewhat cooler promotes driving without fatigue.

The following description will guide you through additional individual settings.

Your BMW center can adjust the settings of your vehicle in such a manner that, when you unlock the vehicle via remote control with your personalized key, your own setting for the automatic climate control is initiated.◀

Automatic air distribution

The AUTO program assumes the adjustment of the air distribution and the air supply for you and in addition adapts the temperature to external influences (summer, winter) to meet preferences you can specify. This program maintains a comfortable in-car climate regardless of the season. Select an interior temperature that is comfortable for you – we recommend 72 °F (22 °C) as a comfortable setting.
The temperature setting and the word "AUTO" for the air flow appear in the display 7 (refer to the overview on page 104). Open the ventilation outlet for the upper body area. Switch on the air conditioner in warm weather. The maximum cooling capacity is achieved when you set the rotary dial 3 (refer to page 108) to cold.

Individual air distribution

You can cancel the AUTO program by selecting specific distribution patterns to suit your own individual requirements. You can direct air to flow onto the windows , toward the upper body , and into the footwell .

CarManuals2.com

To defrost windshield and door windows

This program quickly removes ice and condensation from the windshield and the side windows.

Air conditioner

The air is cooled and dehumidified and – depending on the temperature setting – warmed again when the air conditioner system is switched on.
Depending on the weather, the windshield may fog over briefly when the engine is started.
At outside temperatures below approx. 41 °F (5 °C), switch off the air conditioner. This will help to prevent the windows from fogging up.
If the windows fog over immediately after the air conditioner is switched off, switch it back on.

Condensation forms in the air conditioner system during operation, which then exits under the vehicle. Traces of condensed water of this kind are thus normal.◀

Cooling

Press this button. From ignition key position 1 and higher, the program switches to maximum cooling.
In ignition key position 0, pressing the button activates the residual heat mode. Refer to page 108.

Automatic recirculated-air control (AUC)

You can respond to unpleasant external odors by temporarily stopping the flow of outside air. The system then recirculates the air currently within the vehicle. Press the button repeatedly to run through the following control sequence:

- ▷ Indicator lamps off: Fresh air flows into the vehicle
- ▷ Left-hand indicator lamp on – AUC mode: The system detects pollutants in the outside air and responds by deactivating the outside air flow when required. The system then recirculates the air currently within the vehicle
- ▷ Right-hand indicator lamp on: The flow of external air into the vehicle is permanently blocked. The system then recirculates the air currently within the vehicle.

If you have a multi-function steering wheel with the AUC button (refer to page 23), you can also switch between "OFF" and AUC from there.

If the windows fog over in the recirculated-air mode, switch this mode off and increase the air supply as required.◀

Rear window defroster

When the rear window defroster is activated, the indicator lamp comes on. The rear window defroster switches off automatically.

Temperature

CarManuals2.com

You can make individual temperature settings on the driver's side and the front passenger side. Your settings will be shown in the display 7. The displayed temperatures are reference values for the interior temperature. We recommend 72 °F (22 °C) as a comfortable setting, whether the air conditioner is operating or not. When you start the vehicle, the system ensures that the selected temperature is achieved as quickly as possible. It then maintains this temperature, regardless of the season.

You can set uncontrolled heater output at up to 90 °F (32 °C). Full cooling output is available from the air conditioner down to 60 °F (16 °C).◀

Air supply

The air flow is controlled automatically in the "AUTO" program. AUTO will appear in the display 7. Refer to the overview on page 104. Use "+" and "–" to vary the air flow. When your setting is displayed by bars, the automatic air flow is switched off. Automatic air distribution maintains its setting. You can reactivate the automatic air flow by pressing the "AUTO" button.

When you press "–" during operation at minimum blower speed, all displays are canceled: The fan, heating and air conditioner are switched off. The outside air supply is closed. You can reactivate the system by pressing any button of the automatic climate control.

Online Edition for Part No. 01 41 0 004 597 - © 08/99 BMW AG

Residual heat mode

The heat which is stored in the engine is utilized for heating the interior when the engine has been switched off (while waiting at a railroad crossing, for instance).

In ignition key position 1, you can alter the settings of the automatic climate control. In ignition key position 0, the system automatically directs heated air to the windshield, side windows and footwells.

This function may be activated when the outside temperature is below approx. 59 °F (15 °C), the engine is at operating temperature, and the battery is adequately charged.◀

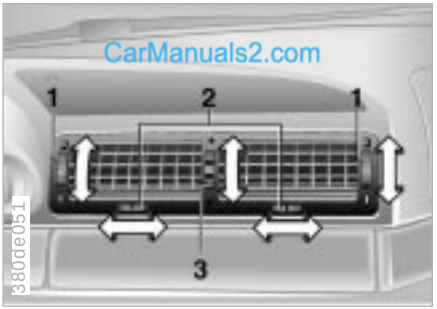

Draft-free ventilation

You can adjust the vent outlets for the upper body area for individual selection of air-flow rates and directions:

You can open and close the ventilation outlets with infinitely-variable adjustments and direct them up or down with the rotary dials 1. In the closed position, air exits only at the upper center of the instrument panel. You can use the levers (2) to adjust the flow direction from side to side.

Set the outlets so that the air flows past you and is not directed straight at you.

Rotary dial 3 allows you to temper the air flow from these outlets by adding heat or cooling as desired:

▷ Turn toward blue – colder
▷ Turn toward red – warmer

To adjust the rear compartment vents: Use the rotary dial on the left to close or open the vent for any desired air flow. You can adjust the temperature with the right rotary dial in the same manner as the adjustment for the front ventilation outlets.
Use the levers at the centers of the vent outlets to control the direction of the emerging air.

Online Edition for Part No. 01 41 0 004 597 - © 08/99 BMW AG

Microfilter, activated-charcoal filter

The microfilter removes dust and pollen from the incoming air. The activated-charcoal filter provides additional protection by filtering gaseous pollutants from the outside air. Your BMW center replaces the filter assemblies as a standard part of your scheduled maintenance. A substantial reduction in air flow indicates that the filter needs to be replaced early.

CarManuals2.com

1 Display for temperature and air supply

2 Temperature/
Switching the system on

3 Air supply/
Switching the system on

2 Temperature

The rear passengers can adjust the temperature for the ventilation outlets which are positioned above the controls as desired. The figures in the display provide a general indication of interior temperature. We recommend 72 °F (22 °C) as a comfortable setting, whether the air conditioner is operating or not. When you start the vehicle, the system ensures that the selected temperature is achieved as quickly as possible. It then maintains this temperature, regardless of the season.

3 Air supply

When you press "–" in the lowest blower speed, all of the displays are canceled: This setting deactivates the blower and shuts off the air supply. You can then switch the rear air conditioner back on by pressing the button again. The air flow in the rear will vary according to the settings selected at the front.

Seat heating*

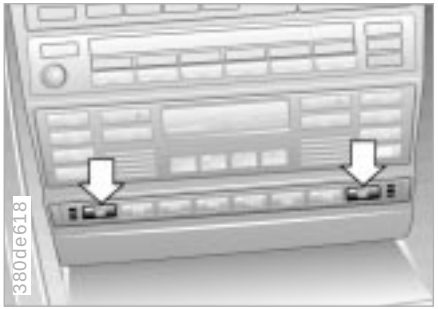

The seat cushion and backrest can be heated with the ignition key in position 2.

You can call up different heating modes by repeatedly pressing the keys.

The highest heating mode is on when the three indicator lamps are lit; one lamp is lit for lowest heating. Temperature regulation in each mode is with a thermostat.

You can also switch the higher heating modes off directly:
Press the key and hold it slightly longer.

Rear seat heating*

The switches are located at the rear of the center console, beneath the air vents.

CarManuals2.com

Steering wheel heating*

To activate and cancel the steering wheel heater, press the button (arrow) with the ignition key in position 2.

The lamp within the button lights up when the steering wheel heater is in operation.

If you have a multi-function steering wheel without steering wheel heating, the button for the recirculated-air mode is in this location (refer to page 23).

Roller sun blinds*

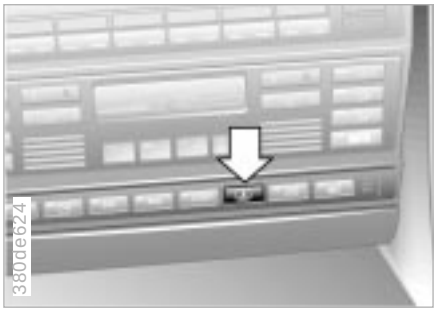

To actuate, press the button briefly with the ignition key position 1 and higher.

Roller sun blinds for the rear side windows*

Use the strap to extract the blinds, then suspend them in the attachment provided.

Independent ventilation system

This system uses the automatic climate control system blower to ventilate the passenger compartment and reduce interior temperatures while the vehicle is parked.

The independent ventilation system is operated via the Multi-Information Display (MID) or the onboard computer. Refer to the separate Operating Instructions of the onboard computer.

You can preselect the activation time for a 30-minute ventilation cycle, or you can switch the system on and off manually with the ignition key at position 1. Since the system uses a substantial amount of electrical current, you should refrain from activating it twice in succession without allowing the battery to be recharged in normal operation between use.

When a preselected activation time is set, the independent ventilation system is operational at outside temperatures above 60 °F (16 °C), or by direct switch activation. It cannot be switched on when the vehicle is moving.

The air emerges via the vent outlets for the upper body. Therefore, the vents must be open for the system to operate.

CarManuals2.com

BMW Universal Transmitter*

The concept

The BMW Universal Transmitter replaces up to three hand-held transmitters of different devices such as garage-door openers, alarm systems, or door locking systems. The BMW Universal Transmitter recognizes and "learns" the transmitted signal of each of the original hand-held transmitters.

The signal of an original hand-held transmitter can be programmed on one of the three channel keys. Following that, each of the devices can be actuated with the appropriately-programmed channel key. Transmission of the signal is signaled by the indicator lamp.

If the vehicle is sold, the memory of the channel keys should be cleared as described on page 114.

During programming and before every remote actuation of a programmed device by the BMW Universal Transmitter, check to be sure that there are no persons, animals or objects within the actuation range of the device in order to prevent possible injuries or damage. Also, comply with the safety precautions of the original hand-held transmitter.◀

To Canadian residents:
During programming, your hand-held transmitter may automatically stop transmitting after two seconds, which may not be long enough to program the BMW Universal Transmitter. If you are programming from one of these hand-held transmitters, the Universal Transmitter's light may begin to flash in a series of double-blinks. If this occurs, continue to hold the button on the Universal Transmitter while you reactivate your hand-held transmitter. You may have to repeat this function several times while programming.◀

Before programming, read the "User information" section on page 114.◀

CarManuals2.com

Original hand-held transmitter

If this symbol is present on the packaging or in the instructions of the original hand-held transmitter, it may be assumed that this hand-held transmitter is compatible with the BMW Universal Transmitter.

Checking for the conversion code

To determine whether the original hand-held transmitter is provided with a conversion-code system, you may either read the instructions for the original hand-held transmitter or program a channel key as described on page 113 (left-hand column under "Programming").

Then press and hold the programmed channel key of the BMW Universal Transmitter. If the indicator lamp of the BMW Universal Transmitter flashes for two seconds and then comes on steadily, the original hand-held transmitter is provided with a conversion-code system. With a conversion-code system, program the channel keys as described on page 113 (right-hand column under "Programming a hand-held transmitter with conversion code").

If you have additional questions, please consult your BMW center or call 1-800-355-3515.◀

CarManuals2.com

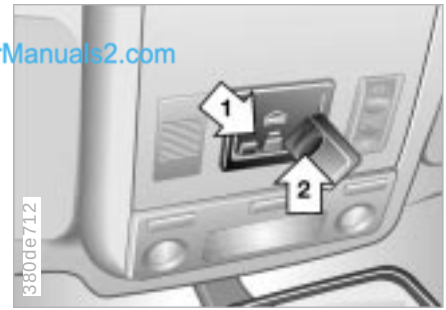

Programming

1 Channel keys

2 Indicator lamp

3 Receiver for programming

Read and comply with the safety precautions on page 112.◀

1 Ignition key position 2
2 For initial use: Press and hold both outside keys 1 until the indicator lamp 2 flashes, and then release them. The three channel keys are cleared
3 Hold the original hand-held transmitter toward the receiver 3 a maximum of 2 inches (5 cm) away
4 Press the transmission key of the original hand-held transmitters (arrow 2) and the desired channel key of the BMW Universal Transmitter (arrow 1) simultaneously. Release both keys as soon as the indicator lamp flashes rapidly
5 To program other original hand-held transmitters, repeat steps 3 and 4.

The corresponding channel key is now programmed with the signal of the original hand-held transmitter.

Programming a hand-held transmitter with conversion code

Read and comply with the safety precautions on page 112.◀

When programming the BMW Universal Transmitter, consult the instructions for the specific device. For using the BMW Universal Transmitter with a conversion-code system, note the following supplemental programming instructions:

A second person facilitates programming of the BMW Universal Transmitter.◀

1 Program the BMW Universal Transmitter as described previously under "Programming"
2 Press and hold the programming key on the receiver of the device for approximately two seconds until the programming light on the device comes on
3 Press the desired channel key of the BMW Universal Transmitter three times.

If you have additional questions, please consult your BMW center or call 1-800-355-3515.◀

Clearing the channel keys

Read and comply with the safety precautions on page 112.◀

The memory of individual channel keys cannot be cleared. However, the three channel keys can be cleared together as follows:

▷ Press and hold both outside keys of the BMW Universal Transmitter until the indicator lamp flashes, and then release them.

All of the channel keys are cleared.

CarManuals2.com

User information

Do not use this BMW Universal Transmitter with any garage door opener that lacks safety "stop" and "reverse" features as required by federal safety standards (this includes any garage door opener model manufactured before April 1, 1982).

This device complies with Section 15 of the FCC Rules. Operation is subject to the following two conditions: As defined in the regulations, this device must not emit harmful interference, and must be shielded against interference from external sources to prevent unauthorized or inadvertent activation.

Glove compartment

To open

Pull the handle down. The lighting will be switched on.

It is also possible to swivel out the glove compartment after opening for improved driver access.

To close

Push the lid up after repositioning.

To lock

Use one of the master keys. A master key is also required for unlocking.

For example, if you turn over only your door and ignition key 3 for valet parking (refer to page 32), access to the glove compartment is not possible.◀

To prevent injury in the event of an accident, close the glove compartment immediately after use.◀

Rechargeable flashlight

Located on the left-hand side of the glove compartment.

CarManuals2.com

Features integral overload-protection, so it can be left in its holder continuously.

Be sure that the flashlight is switched off when it is inserted into its holder. Failure to comply with this precaution could lead to overcharging and damage.◀

Center armrests

Rear armrest

Pull the strap to fold down the armrest.

To open the storage compartment: Lift the button (arrow).

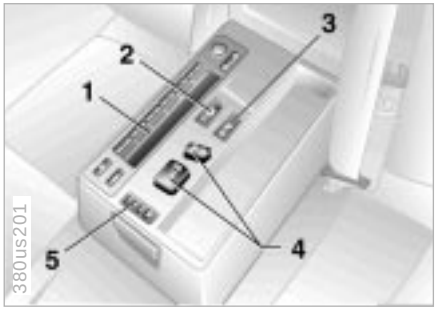

Multifunction armrest, rear*

In order to operate certain functions from the rear seat, corresponding controls are integrated into the center armrest.

Fold out the armrest and open the cover. Refer to "Rear armrest."

The illustration shows the maximum possible number of controls, corresponding to a full range of optional equipment. Refer to the descriptions of the individual accessories for additional details on the equipment options.

1 Multi-Information Display for operating the radio and onboard computer (with limited function range)

2 Actuation of the power rear window blind

3 Front passenger side shoulder support

4 Power adjustment, front passenger's seat

5 Seat memory for the front passenger

Front armrest

Press the button at the front for front/rear adjustment (arrow 1).

Press the side-mounted buttons for access to the storage compartments (arrows 2).

CarManuals2.com

Additional storage areas

Front storage compartment on slanted surface of center console:
To open, press the recess at the top, press to close.

This storage area can be ordered with an optional CD or cassette holder.

Storage compartment on center console between the front seats:
To open, reach into the recess at the front and pull upward.

When a cellular phone is installed, a small storage compartment is provided on each side of the phone. Press the side button to open.

A rotating coin holder is located on the right under the radio cover.

You will find additional storage compartments in all of the doors as well as on the backrests of the front seats.

Cup holders

There are holders for two beverage containers in a tray in the center console as well as in the face of the rear seat bench near the center seat position.

To open, press against the upper recess; apply pressure and slide back to close.

Cellular phone*

Handsfree system

On vehicles that are wired for a telephone*, the cover for the handsfree speaker is located in the headliner near the interior lamp.

For further information on the cellular phone, refer to the separate Operating Instructions.

CarManuals2.com

Ashtray

To open

Press gently on the recess (arrow).

To extinguish a cigarette, tap off the ash and gently press the tip into the funnel.

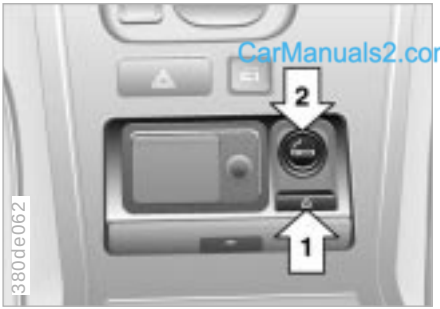

CarManuals2.com

To empty

Press button (arrow 1): You can now pull the ashtray upward for removal.

Rear

To open: Press the recess at the top.

To empty: Pull the ashtray out.

Online Edition for Part No. 01 41 0 004 597 - © 08/99 BMW AG

Cigarette lighter

Push the lighter in (arrow 2). Remove as soon as the lighter pops out.

Cigarette lighter for rear passengers

At the rear of the center console.

Hold or touch the hot cigarette lighter by the knob only. Holding or touching it in other areas could result in burns.
The cigarette lighter remains operational when the ignition key has been removed. For this reason, children should never be left in the car unattended.◀

Cigarette lighter socket

Suitable for attaching power supplies to hand-held lamps, car vacuum cleaners, etc., up to a rating of approximately 200 watts at 12 volts. Avoid damage to the socket caused by inserting plugs of different shapes or sizes.

Nonsmoker's equipment package*

On vehicles with the nonsmoker's equipment package, the socket is concealed by a cover panel.

For access to the socket: Lift the cover panel off.

CarManuals2.com

Rear footrests*

You can detach the footrests to place them in any desired position within the footwell.

Ski bag*

Designed for safe, convenient transport of 3 to 4 pairs of skis.

The supplementary length provided by the ski bag in combination with the space in the luggage compartment makes it possible to transport skis of up to 6.8 ft (2.10 m) in length. Because of the tapered shape of the ski bag, it can only accommodate two pairs of skis with a length of 6.8 ft (2.10 m).

Lower the center armrest

Fold the center armrest completely out.

Detach the Velcro® strip holding the center cover in position and place it on the armrest.

Gently raise the front of the armrest and press the two levers inward (arrows): The armrest drops down against the surface of the seat.

Before loading the ski bag, the center armrest must be completely lowered.◀

Loading

1 Press the release button (arrow 1) The cover panel in the luggage compartment is unlocked
2 Press the detent lever (arrows 2) together and fold the cover forward
3 Extend the ski bag between the front seats. The zipper provides convenient access to stored items. It may be opened to allow the ski bag to dry.

CarManuals2.com

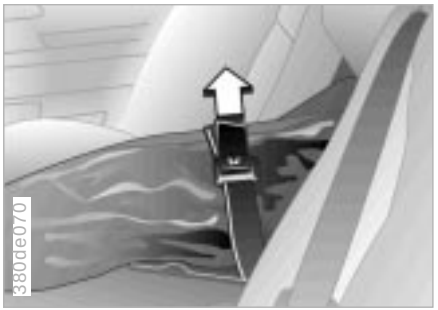

4 From the inside of the luggage compartment, use the magnetic retainers to attach the cover panel to the underside of the rear parcel tray.

Please ensure that the skis are clean before loading them into the bag. Take care to avoid damage from sharp edges.

Secure the bag's contents by tightening down the strap with the buckle.◀

CarManuals2.com

To store the ski bag, perform the above steps in reverse sequence. The center armrest automatically returns to its original position when you fold it back.

An unsecured ski bag could lead to loss of vehicle control and to personal injury in the event of an accident.◀

Securing the load

- Secure smaller, light pieces with the retaining straps or with a luggage compartment net or elastic straps (refer to page 41)
- For large, heavy pieces, see your BMW center for load-securing devices*. Lashing eyes are provided at the corners of the luggage compartment for attaching these load-securing devices (refer to the illustration)
- Comply with the information enclosed with the load-securing devices.

Always position and secure the load correctly, otherwise it can endanger the passengers in the event of braking, swerving or in a crash.
Do not exceed the permissible gross weight and the permissible axle loads (refer to page 200). If you do so, the operating safety of the vehicle is no longer ensured, and you are in violation of the law.
Do not stow heavy or hard objects in the passenger compartment unless they are properly secured. Improperly secured objects would be thrown around during braking and evasive maneuvers and endanger the occupants.◀

Roof-mounted luggage rack*

A special luggage system is available as an option for your BMW. Please comply with the precautions included with the installation instructions.

Because roof racks raise the center of gravity of the car when loaded, they exercise a major effect on its handling and steering response.
You should therefore always remember not to exceed the approved roof weight, the approved gross vehicle weight or the axle weights when loading the rack. You will find the specifications under "Technical Data" on page 200.

Make sure that the load is not too heavy, and attempt to distribute it evenly. Always load the heaviest pieces first (on the bottom). Make sure there is sufficient space to raise the sliding/tilt sunroof.

CarManuals2.com

Roof-mounted luggage rack*

Secure the roof luggage correctly and tightly to prevent it from shifting or being lost during driving (danger to following traffic).

Drive smoothly: Avoid sudden acceleration and braking maneuvers, corner gently.

The roof load increases aerodynamic resistance: Increased fuel consumption and additional stresses on the vehicle's body result from this.

CarManuals2.com

CarManuals2.com

Online Edition for Part No. 01 41 0 004 597 - © 08/99 BMW AG

Special operating instructions:
Break-in procedure 126
Driving notes 127
Catalytic converter 128
Antilock Brake System (ABS) 129
Disc brakes 130
Brake system 132
Winter operation 132
Power steering 134
Level control system 134
Cellular phone 135
Radio reception 135

Wheels and tires:
Tire inflation pressure 136
Tire condition 136
Tire replacement 137
Tire rotation 137
Wheel and tire combinations 139
Winter tires 140
Snow chains 141
Approved wheel and tire specifications 142

Under the hood:
Hood 143
Engine compartment 144
Washer fluids 148
Washer nozzles 148
Engine oil 149
Coolant 151
Brake fluid 152
Vehicle Identification Number 153

Care and maintenance:
The BMW Maintenance System 154
Caring for your car 155
Airbags 161
Vehicle storage 161

Laws and regulations:
Technical modifications to the vehicle 162
OBD connector 163

CarManuals2.com

Overview

Controls and features

Operation, care and maintenance

Owner service procedures

Advanced technology

Technical Data

Index

Break-in procedure

To ensure that your vehicle provides maximum economy throughout a long service life, we request that you comply with the following:

Engine and differential

Up to 1,200 miles (2,000 km):
Drive at varying engine speeds and road speeds, but do not exceed 4500 rpm and/or 105 mph (170 km/h) during this initial period.

Comply with all local, state and federal maximum speed laws.

Refrain from using full throttle and avoid pressing the accelerator beyond the kickdown point.

Once 1,200 miles (2,000 km) have elapsed, engine speeds and road speeds can gradually be increased.

You should also comply with these break-in procedures if the engine or differential is replaced later in the course of the vehicle service life.

Tires

Due to technical factors associated with their manufacture, tires do not achieve their full traction potential until an initial break-in period has elapsed. For this reason, drive with extra care during the initial 200 miles (300 km).

Comply with all local, state and federal maximum speed laws.

When the vehicle is operated on wet or slushy roads, a wedge of water may form between the tire and the road surface. This phenomenon is referred to as aquaplaning, or hydroplaning, and can lead to partial or complete loss of traction, vehicle control and braking effectiveness. Reduce your speed on wet roads.◀

Brake system

Approximately 300 miles (500 km) must elapse before the brake pads and rotors achieve the optimal pad-surface and wear patterns required for trouble-free operation and long service life later on.

To break-in the separate parking brake drums, apply the parking brake lightly when coasting to a standstill (at a traffic signal, for instance), provided that traffic conditions allow you to do so.
To avoid corrosion, repeat this procedure from time to time.

The brake lamps do not come on when the parking brake is applied.
Vacuum for the brake system servo unit on your BMW is available only when the engine is running. When you move the car with the engine shut off – when towing, for instance – substantially higher levels of pedal force will be required to brake the vehicle.◀

CarManuals2.com

Online Edition for Part No. 01 41 0 004 597 - © 08/99 BMW AG

Brakes:
Do not drive with your foot resting on the brake pedal. Even light but consistent pedal pressure can lead to high temperatures, brake wear and possibly even brake failure.
Aquaplaning:
When driving on wet or slushy roads, reduce road speed. If you do not, a wedge of water can form between tires and road surface. This phenomenon is referred to as aquaplaning or hydroplaning. It is characterized by a partial or complete loss of contact between the tires and the road surface. The ultimate results are loss of steering and braking control.
Driving through water:
Do not drive through water more than 1 foot (30 cm) deep. If you must drive through water accumulations up to that depth, drive only at walking speed, otherwise damage to the engine, the electrical system and the transmission can occur.

Rear package tray:
Never use the rear package tray to store heavy or bulky objects. If you do so, such objects could pose the risk of injury to vehicle occupants during braking or evasive maneuvers, or in a crash.
Clothes hooks:
When hanging articles of clothing from the hooks, be sure that they will not obstruct the driver's vision. Do not hang heavy objects on the hooks. If you do so, such objects could pose the risk of personal injury during braking or evasive maneuvers, for example.◀

CarManuals2.com

Catalytic converter

The catalytic converter reduces harmful exhaust emissions, and is designed for use with unleaded fuel only.

Even minute quantities of lead would be enough to permanently damage both the catalytic converter and the system's oxygen sensor.

To ensure efficient, trouble-free engine operation and avoid potential damage:

- ▷ Be sure to comply with the scheduled maintenance requirements
- ▷ Fill the fuel tank well before it is empty
- ▷ If you have problems starting the engine, use jumper cables (you cannot tow-start the vehicle with an automatic transmission)
- ▷ Avoid other situations in which the fuel is not burned, or burns incompletely, such as engaging the starter frequently or for extended periods, or repeated start attempts in which the engine does not start (stopping and restarting an engine which is running properly does not present a problem). Never let the engine run with any of the spark plug cables disconnected.

⚠ Be sure to comply with the instructions above to prevent unburned fuel from reaching the catalytic converter. Otherwise there is danger of overheating and damage to the catalytic converter.
Extreme temperatures occur at the catalytic converter on this and every catalyst-equipped vehicle. Heat shields are installed adjacent to some sections of the exhaust system. Never remove these shields; do not apply undercoating to their surfaces. When driving, standing at idle, and parking the vehicle, take care to avoid contact between the exhaust system and flammable materials (grass, hay, leaves, etc.). Such contact could lead to a fire, resulting in personal injury and property damage.◀

CarManuals2.com

The concept

ABS enhances active safety by helping to prevent the wheels from locking during brake applications. The reason: Locked wheels are dangerous. When the front wheels slide, the driver loses steering control over the vehicle. Traction loss at the rear wheels can cause the rear end to break into an uncontrolled skid.

With ABS, you will achieve the shortest-possible braking distances under all given conditions (braking while driving straight ahead or in curves, different road surfaces).

ABS is designed to meet two essential requirements during every brake application:

- ▷ To help provide vehicle stability
- ▷ To help maintain steering control and maneuverability – on all types of road surfaces (asphalt, concrete, mud, wet pavement, snow, ice).

Braking with ABS

The system becomes operative once the vehicle exceeds a speed of approx. 6 mph (10 km/h). The ABS is deactivated whenever the vehicle's speed drops back below approx. 4 mph (6 km/h). This means that the wheels can lock in the final phase of a panic stop – a factor of no significance in actual use.

If you are in a situation that requires full braking, you will exploit the full benefits of the ABS system if you apply maximum brake pressure ("panic stop"). Since the vehicle maintains steering responsiveness, you can avoid possible obstacles with a minimum of steering effort, despite the full brake application.

The ABS system's closed-loop control circuit cycles in fractions of a second. A pulsation at the brake pedal, together with the sounds associated with the hydraulic controls, tells you that the brake system is within its maximum limit range and reminds you that you should adapt road speed to the road conditions.

On road surfaces that have a loose surface layer on a firm base with good traction (on gravel or snow, for instance), braking distances may be longer than with locked wheels. This is also true if snow chains are mounted. However, ABS continues to provide enhanced vehicle stability and steering response under these conditions.

CarManuals2.com

Information for your safety

Not even ABS can suspend the laws of physics. ABS alone cannot prevent accidents when the brakes are applied without an adequate safety distance between vehicles, if the vehicle is driven with excessive speed, or if aquaplaning occurs. Responsibility for these types of situations remains in the hands (and at the feet) of the driver. You should never allow the added safety of ABS to lull you into a false sense of security, or mislead you into taking increased risks that could affect your own safety and that of others.

Do not make any modifications to the ABS system.
Service procedures on ABS are to be performed by authorized technicians only.◀

In the event of a fault

If the ABS warning lamp in the instrument cluster comes on, refer to page 21. The brake system then reverts to conventional operation as on vehicles without ABS. However, have the brake system checked by your BMW center as soon as possible. To prevent undetected defects and cumulative faults from adversely affecting the brake system, refer any problems to your authorized BMW center at the earliest opportunity.

CarManuals2.com

Disc brakes

Disc brakes furnish optimum deceleration and braking control and greater fade resistance under heavy use.

When the vehicle is driven only occasionally, during extended periods when the vehicle is not used at all, and in operating conditions where brake applications are less frequent, there is an increased tendency for corrosion of the rotors and accumulation of contamination on the brake pads. This occurs because the minimal pressure which must be exerted by the pads to clean the rotors by brake applications is not reached.

If the brake rotors are corroded, they will tend to respond to braking with a pulsating effect which even extended application will fail to cure.

For your own safety: Use only brake pads that BMW has approved for your particular vehicle model. BMW cannot evaluate non-approved brake pads to determine if they are suited for use, and therefore cannot ensure the operating safety of the vehicle if they are installed.◀

Driving notes

While driving in wet conditions and in heavy rain, it is a good idea to apply light pressure to the brake pedal every few miles. Watch traffic conditions to ensure that this maneuver does not endanger other road users. The heat generated in this braking process helps dry the brake pads and rotors.

Maximum braking force is obtained while the wheels continue to rotate, peaking when the wheels remain on the verge of locking without actually doing so. ABS maintains this state automatically. If the ABS fails, you should revert to the staggered braking technique (refer to page 133).

Extended or steep mountain descents do not necessarily have to lead to reduced braking efficiency; downshift to a gear in which only minimal periodic brake applications are required – move the selector lever to the appropriate lower range.

You can continue to increase the braking effect of the engine by selecting a lower gear – you can select transmission ranges as low as position 2 for extreme conditions.

Should engine braking prove inadequate, you should still avoid extended, continuous braking. Instead of maintaining low to moderate pressure over an extended period of time, you should decelerate the vehicle by applying more substantial force on the pedal (watch for following traffic!) and then pausing before repeating the application. This staggered braking technique allows the brakes to cool in the intervals between active braking phases, preventing overheating and ensuring that full braking capacity remains available at all times.

Do not coast with the transmission selector lever in neutral. Do not drive with the engine shut off. The engine provides no braking effect when the transmission is in neutral, and there is no power-assist for braking or steering when the engine is shut off.
Never allow floor mats, carpets or any other objects to protrude into the area around the accelerator and brake pedals and obstruct their movement.◀

Dynamic Brake Control (DBC)*

If you apply the brakes rapidly, this system automatically produces the maximum braking force boost and thus helps to achieve the shortest possible braking distance during "panic stops." All of the benefits of the ABS system are exploited under these circumstances.

Do not reduce the pressure on the brake pedal for the duration of the brake application. When the brake pedal is released, the DBC is deactivated.

BRAKE

In the event of a malfunction, the warning lamp comes on with a yellow light. Conventional braking efficiency is available without limitations.
Have the system checked and repaired at your BMW center as soon as possible.

For "Information for your safety" covering the ABS system, refer to page 129. This information also generally applies for DBC.◀

CarManuals2.com

Brake fluid level

The warning lamp for the brake hydraulic system comes on or the message "CHECK BRAKE FLUID" appears in the Check Control:
The brake fluid level is too low in the reservoir. Refer to page 152.

If the brake fluid level is too low and brake pedal travel has become noticeably longer, there may be a defect in one of the brake system's hydraulic circuits.

Proceed to the nearest BMW center. Higher brake application pressure may be necessary under these conditions, and brake pedal travel may be significantly longer. Please remember to adapt your driving style accordingly.◀

The warning lamp also comes on when the "CHECK BRAKE PADS" message appears in the Check Control.

Brake pads

The message "CHECK BRAKE PADS" appears in the Check Control:

The brake pads have reached their minimum pad thickness. Proceed to the nearest BMW center as soon as possible to have the pads replaced.

For your own safety: Use only brake pads that BMW has approved for your particular vehicle model. BMW cannot evaluate non-approved brake pads to determine if they are suited for use, and therefore cannot ensure the operating safety of the vehicle if they are installed.◀

CarManuals2.com

Winter operation

The onset of winter is often accompanied by rapid changes in weather. Adaptations in driving style should be accompanied by preparations on the vehicle itself to ensure that your vehicle operation through the winter remains safe and trouble-free.

Coolant

Be sure that the coolant mixture is kept at the year-round ratio of 50:50 (water and antifreeze/corrosion protection). This mixture provides protection against freezing down to approx. -34 °F (-37 °C). Replace the coolant every four years.

Locks

BMW door lock deicer can be used to free the locks if they are frozen. This deicer also contains lubricant.
After using deicer, treatment with BMW lock cylinder grease is recommended.

Online Edition for Part No. 01 41 0 004 597 - © 08/99 BMW AG

Rubber seals and components

In order to prevent the weather-stripping from freezing, apply rubber treatment or a silicone spray to the seals on the doors, hood and luggage compartment lid.

A full range of car care products is available from your BMW center.◀

Snow chains

BMW snow chains* can be fitted on both summer and winter tires in response to severe winter road conditions. Mount them in pairs on the rear wheels only, and be sure to comply with the manufacturer's safety instructions.
Do not exceed a maximum speed of 30 mph (50 km/h). In this situation (snow chains mounted), deactivate the ASC+T or DSC. Refer to page 96.

Starting off

When starting off in deep snow or when rocking the car to free it, we recommend that you switch the ASC+T or DSC off. Refer to page 96.

Driving on low-traction road surfaces

Use smooth, gentle pressure to control the accelerator pedal. Avoid excessive engine speeds and shift to the next higher gear at an early point. Adapt your speed and driving style when approaching grades. Maintain an adequate distance between yourself and the car ahead.

Brakes

Winter road conditions substantially reduce the amount of traction available between the tires and the road surface; the resulting increases in braking distance are considerable and should be continually borne in mind.

CarManuals2.com

ABS is intended to prevent the wheels from locking during brake applications, thus helping to maintain vehicle stability and steering response.

If the ABS does not respond in a critical braking situation and the wheels lock: Reduce the pressure on the brake pedal until the wheels just start to roll again while still maintaining enough force to continue braking.
Following that, increase pedal pressure again. Reduce the pressure as the wheels lock, then reapply pressure, etc. This type of staggered braking will reduce the braking distance, and the vehicle still remains responsive to steering.
You can then attempt to steer around hazards after you have reduced pressure on the brake pedal.

Do not shift down on slick road surfaces. Doing so could cause the rear wheels to lose traction and skid, which could result in the loss of vehicle control.◀

Skid control

Release the accelerator pedal. Countersteer carefully and attempt to regain control of the vehicle.

Parking

Place the selector lever in position P (Park). Engage the parking brake when parking on hills and inclined surfaces. In order to prevent the parking brake linings from locking in the drum due to frost or corrosion, dry them by gently applying the parking brake as the vehicle is coming to a stop. Make sure that following traffic is not endangered.

⚠ The brake lamps do not come on when the parking brake is applied.◀

Power steering

If there is a change in steering response (difficult steering, for example) or, especially on vehicles with Servotronic*, if the steering "drifts" or "floats" at increasing speeds:
Have your BMW center inspect this system as soon as possible.

CarManuals2.com

Servotronic

If steering becomes lighter as speed increases:
Malfunction in the electronic control system. Have your BMW center inspect this system as soon as possible.

⚠ If the power steering fails, increased effort will be required to steer the vehicle.◀

Level control system*

If the message "LEVEL CONTROL INACTIVE" appears in the Check Control, there is a malfunction in the level control system.

Stop and inspect the vehicle. If it is riding significantly lower in the rear than in the front, or if it is sitting at an incline (left rear compared to right rear), consult the nearest BMW center. Drive with appropriate caution in the meantime. The vehicle has reduced ground clearance or driving comfort is noticeably reduced.

Even if the attitude of the vehicle is normal, you should consult the nearest BMW center if the warning lamp indicates a system fault.

Online Edition for Part No. 01 41 0 004 597 - © 08/99 BMW AG

Cellular phone

Mobile communications systems (cellular phone, radio, etc.) are permitted with an output up to 10 watts only. Even these systems may trigger malfunctions in the operation of your vehicle if they are not specifically designed for use with the vehicle. BMW can neither test nor assume responsibility for every individual product being offered on the market. We recommend that you consult your BMW center before purchasing any device of this kind.

To ensure that your BMW continues to provide reliable and trouble-free operation, refrain from using a cellular phone or other radio device with an antenna located inside the passenger compartment. The antenna should always be mounted on the outside of the vehicle.

▷ Before loading the vehicle on a car-carrier train or driving it through a car-wash, remove the antenna.◀

Radio reception

The reception and sound quality obtained from mobile radios varies according to a variety of factors, including the broadcast range of the transmitter and the directional orientation of the antenna. Interference factors such as high-tension power lines, buildings and natural obstructions can all lead to unavoidable reception interference, regardless of how well the vehicle sound system is operating.
Climatic factors such as intense solar radiation, fog, rain and snow can also interfere with reception.

Cellular phones without official BMW approval can also generate interference. This phenomenon assumes the form of a low-pitched hum emanating from the speaker system.

CarManuals2.com

Please refer to the Owner's Manual provided with your sound system for detailed information on its use.

Tire inflation pressure

Information for your safety

The factory-approved radial tires are matched to the car and have been selected to provide optimum safety and driving comfort on your car.

It is not merely the tire's service life, but also driving comfort and – above all else – driving safety which depend on the condition of the tires and the maintenance of the specified tire pressure.

Incorrect inflation pressure is a frequent cause of tire damage. It also influences the roadholding ability of your BMW.

Check tire inflation pressures – including the spare tire – regularly, at least every two weeks and before beginning a longer trip. If this is not done, incorrect tire pressures can cause driving instability and tire damage, ultimately resulting in accidents.◀

Tire condition

Tire tread – tire damage

Inspect your tires frequently for tread wear, signs of damage and for foreign objects lodged in the tread. Check the tread depth.

Tread depth should not be allowed to go below 0.12 in (3 mm), even though the legally specified minimum tread depth is only 0.063 in (1.6 mm). Wear indicators appear in the tread at 0.063 in (1.6 mm) to indicate that the legally permissible wear limit has been reached. Below 0.12 in (3 mm) tread depth, there is an increased risk of aquaplaning, even at relatively moderate speeds and with only small amounts of water on the road.

Do not drive on a deflated (flat) tire. A flat tire greatly impairs steering and braking response, and can lead to complete loss of control over the vehicle.
Avoid overloading the vehicle so that the permitted load on the tires is not exceeded. Overloading can lead to overheating and increases the rate at which damage develops inside the tires.
The ultimate result can assume the form of a sudden air loss.
Unusual vibrations encountered during normal vehicle operation can indicate tire failure or some other vehicle defect, as can variations in normal vehicle response, such as a pronounced tendency to pull to the left or right. Should this occur, respond by immediately reducing your speed and carefully proceeding to the nearest BMW center or professional tire center, or having the vehicle towed in to have it and its tires inspected.
Tire damage (up to and including blowouts) can endanger the lives of both the vehicle occupants and other road users.◀

CarManuals2.com

To maintain good handling and vehicle response, use only tires of a single tread configuration from a single manufacturer. BMW tests and approves wheel/tire combinations. Refer to page 142.

CarManuals2.com

DOT Quality Grades

Treadwear
Traction AA A B C
Temperature A B C

All passenger car tires must conform to Federal Safety Requirements in addition to these grades.◀

Treadwear

The treadwear grade is a comparative rating based on the wear rate of the tire when tested under controlled conditions on a specified government test course.
For example, a tire graded 150 would wear one and one-half (1 1/2) times as well on the government course as a tire graded 100. The relative performance of tires depends upon the actual conditions of their use, however, and may depart significantly from the norm due to variations in driving habits, service practices and differences in road characteristics and climate.

Traction

The traction grades, from highest to lowest, are AA, A, B, and C.
Those grades represent the tire's ability to stop on wet pavement as measured under controlled conditions on specified government test surfaces of asphalt and concrete. A tire marked C may have poor traction performance.

The traction grade assigned to this tire is based on straight-ahead braking traction tests, and does not include acceleration, cornering, hydroplaning, or peak traction characteristics.◀

Temperature

The temperature grades are A (the highest), B and C, representing the tire's resistance to the generation of heat and its ability to dissipate heat when tested under controlled conditions on a specified indoor laboratory test wheel.
Sustained high temperature can cause the material of the tire to degenerate and reduce tire life, and excessive temperature can lead to sudden tire failure. The grade C corresponds to a level of performance which all passenger car tires must meet under the Federal Motor Vehicle Safety Standard No. 109. Grades B and A represent higher levels of performance on the laboratory test wheel than the minimum required by law.

The temperature grade for this tire is established for a tire that is properly inflated and not overloaded. Excessive speed, underinflation, or excessive loading, either separately or in combination, can cause heat buildup and possible tire failure.◀

Tire replacement

Uniform Tire Quality Grading

Quality grades can be found where applicable on the tire sidewall between tread shoulder and maximum section width. For example:

Treadwear 200 Traction AA
Temperature A

Do not use retreaded tires, since driving safety may be impaired by their use. This is due to the possible variations in casing structures and, in some cases, to their extreme age, factors that can lead to a decrease in their durability.◀

Tire age

The date on which the tire was manufactured is indicated by the code on the sidewall:
DOT ... 179 means that the tires were manufactured in the 17th week of 1999.

BMW recommends the replacement of all tires when the tires are no more than 6 years old, even if a tire life of 10 years is possible.

Spare tires over 6 years old should be used only in case of emergency. Such a tire should be replaced by a new tire immediately, and should not be mounted together with new tires.

CarManuals2.com

Tire rotation

Between the axles

The tread wear patterns at the front end differ from those at the rear – the actual patterns will vary according to individual driving conditions. In the interests of safety and maintaining optimal handling characteristics, tire rotation is not recommended.

If a proposed interaxle rotation of tires is based on economic considerations, one should consider whether the costs for the rotation are likely to be recaptured by any increase in the service life of the tires which might be realized. Rotation should always be carried out at short intervals, with a maximum of 3,000 miles (5,000 km). Consult your BMW center for more information.

Online Edition for Part No. 01 41 0 004 597 - © 08/99 BMW AG

Tire rotation

Should you decide to rotate the tires, it is essential to comply with the following:
Rotate tires on the same side only, since braking characteristics and road grip could otherwise be adversely affected.

Following rotation, correct the tire inflation pressure.

If different tire sizes are mounted on the front and rear axles (page 142), the tires may not be rotated from one axle to the other.◀

Wheel and tire combinations

The right choice

Use only tires approved by BMW. Refer to page 142.
Because of the high speeds this vehicle can reach, the use of specific tire brands, specifications and dimensions is mandatory. Consult any BMW center for details.
Comply with national, state, or provincial regulations.

The correct wheel-tire combination affects different systems such as ABS, ATC, ASC+T/DSC. The function of these systems is impaired if improper wheel-tire combinations are used. CarManuals2.com
For this reason, use only tires of the same brand and tread pattern. In the event of a flat tire, for example, remount the approved wheel-tire combination as soon as possible.◀

Codes on tires and wheels

The tire codes will aid you in selecting the correct tire.

Codes on radial tires:

For example 235/60 R 16 100 W

- Nominal width in mm — 235
- Aspect ratio in % — 60
- Radial tire code — R
- Rim diameter in inches — 16
- Load rating (not on ZR tires) — 100
- Speed rating (before R on ZR tires) — W

The speed rating indicates the approved maximum speed for the tire.

Summer tires:

S = up to 112 mph (180 km/h)
T = up to 118 mph (190 km/h)
H = up to 130 mph (210 km/h)
V = up to 149 mph (240 km/h)
W = up to 167 mph (270 km/h)
Y = up to 186 mph (300 km/h)
ZR = over 149 mph (240 km/h)

Wheel and tire combinations

All-season an winter tires:

Q M+S = up to 100 mph (160 km/h)
T M+S = up to 118 mph (190 km/h)
H M+S = up to 130 mph (210 km/h)

Codes stamped on light-alloy wheels:

For example 71/2 J x 16 H 2

Rim width in inches — 71/2
Code letter for flange type — J
Symbol for full-drop center rim — x
Rim diameter in inches — 16
Hump on the 2 rim shoulders — 2

Protect valve inserts against dirt using screw-on valve stem caps. Dirt in the valves frequently leads to slow leaks.

Winter tires

Choosing the right tire

BMW recommends winter tires (M+S radial tires) for driving in adverse winter road conditions. While tires known as all-season tires (M+S designation) provide better winter traction than summer tires with load ratings H, V, W and ZR, they generally do not achieve the performance of winter tires.

In the interests of sure tracking and safe steering response, mount winter tires which are made by the same manufacturer and which have the same tread configuration at all four wheels.

Mount only winter tires which have been approved by BMW. Any BMW center will be glad to provide you with information on the best winter tires for your particular driving conditions.

CarManuals2.com

Do not exceed specified maximum speeds

Never exceed the maximum speed for which the tires are rated.
Unprofessional attempts by laymen to service tires can lead to damage and accidents.
Have this work performed by skilled professionals only. Any BMW center has the required technical knowledge and the proper equipment and will be happy to assist you.◀

Tire condition, tire pressure

Winter tires display a perceptible loss in their ability to cope with winter driving conditions once the tread wears to below 0.16 in (4 mm), and should thus be replaced.

Comply with the specified tire inflation pressures – and be sure to have the wheel and tire assemblies balanced every time you change the tires.

Storage

Store tires in a cool, dry place, away from light whenever possible. Protect the tires against contact with oil, grease and fuel.

Snow chains*

Use narrow-link BMW snow chains on summer or winter tires only in pairs and only on the rear wheels. Comply with all manufacturer's safety precautions when mounting the chains.

CarManuals2.com

Approved wheel and tire specifications

Tire specifications	Light-alloy wheel
All-season tires	
235/60 R 16 100 H M+S	7.5Jx16 8Jx16
Summer tires	
235/60 R 16 100 W	7.5Jx16 8Jx16
245/55 R 16 100 W	8Jx16
235/50 ZR 18	8Jx18
Rear: 255/45 ZR 18	9Jx18 9.5Jx18
Winter tires (M+S)	
215/65 R 16 98 Q	7.5Jx16
235/60 R 16 100 Q	7.5Jx16 8Jx16
245/55 R 16 100 Q	8Jx16

Note the tire and wheel data in the official documents of the car. If sizes not approved by the manufacturer are mounted, an entry in the vehicle's documents may be necessary. Comply with local legislation.

The use of rims and wheel bolts that do not meet the specifications of the original factory-installed equipment will affect the safe operation of your vehicle and may cause an accident and personal injury.
Never mix tires of different design, such as steel-belted radials with radial bias-belted or bias-ply tires, etc. Mixing tire types will adversely affect roadholding and can lead to loss of vehicle control.◀

CarManuals2.com

To release the hood

Pull the lever located at the lower left-hand side of the instrument panel.

Do not work on your vehicle without appropriate skills. Switch off the engine and allow it to cool down before working in the engine compartment. Always disconnect the battery before working on any electrical systems or equipment. Comply with all applicable instructions and warnings. Failure to work in an informed, professional manner when servicing components and materials constitutes a safety hazard for vehicle occupants and other road users. If you are not familiar with the guidelines, please have the operations performed by your BMW center.◀

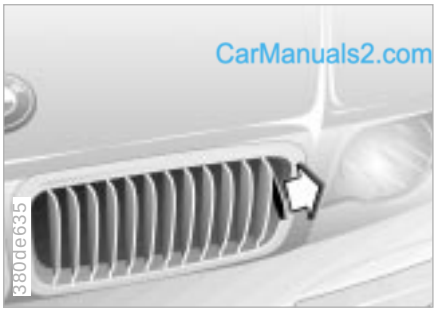

To open

Pull the release handle and open the hood.

To close

Allow the hood to drop from a height of about 12 inches (30 cm) so that it audibly engages.

To avoid injuries, be sure that the travel path of the hood is clear when it is closed, as with all closing procedures.
If it is determined that the hood is not completely closed while driving, stop immediately and close it securely.◀

Engine compartment – BMW 740i/L

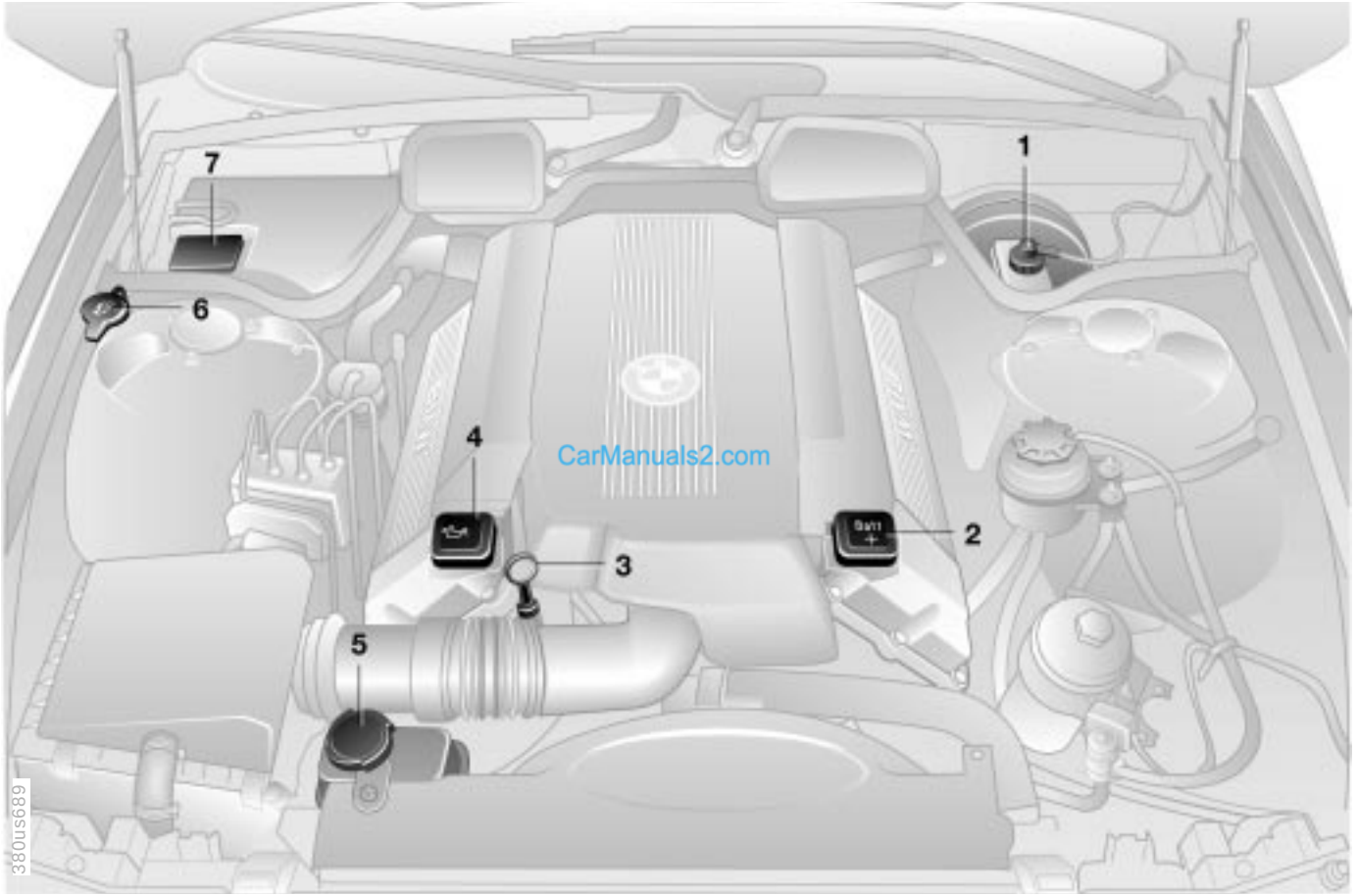

CarManuals2.com

Online Edition for Part No. 01 41 0 004 597 - © 08/99 BMW AG

Engine compartment – BMW 740i/L

1 Brake fluid reservoir 152
2 Auxiliary terminal for jump starting 183
3 Engine oil dipstick 149
4 Engine oil filler neck 149
5 Coolant expansion tank 151
6 Reservoir for headlamp and windshield washer system 148
7 Fuse box 180

CarManuals2.com

Engine compartment – BMW 750iL

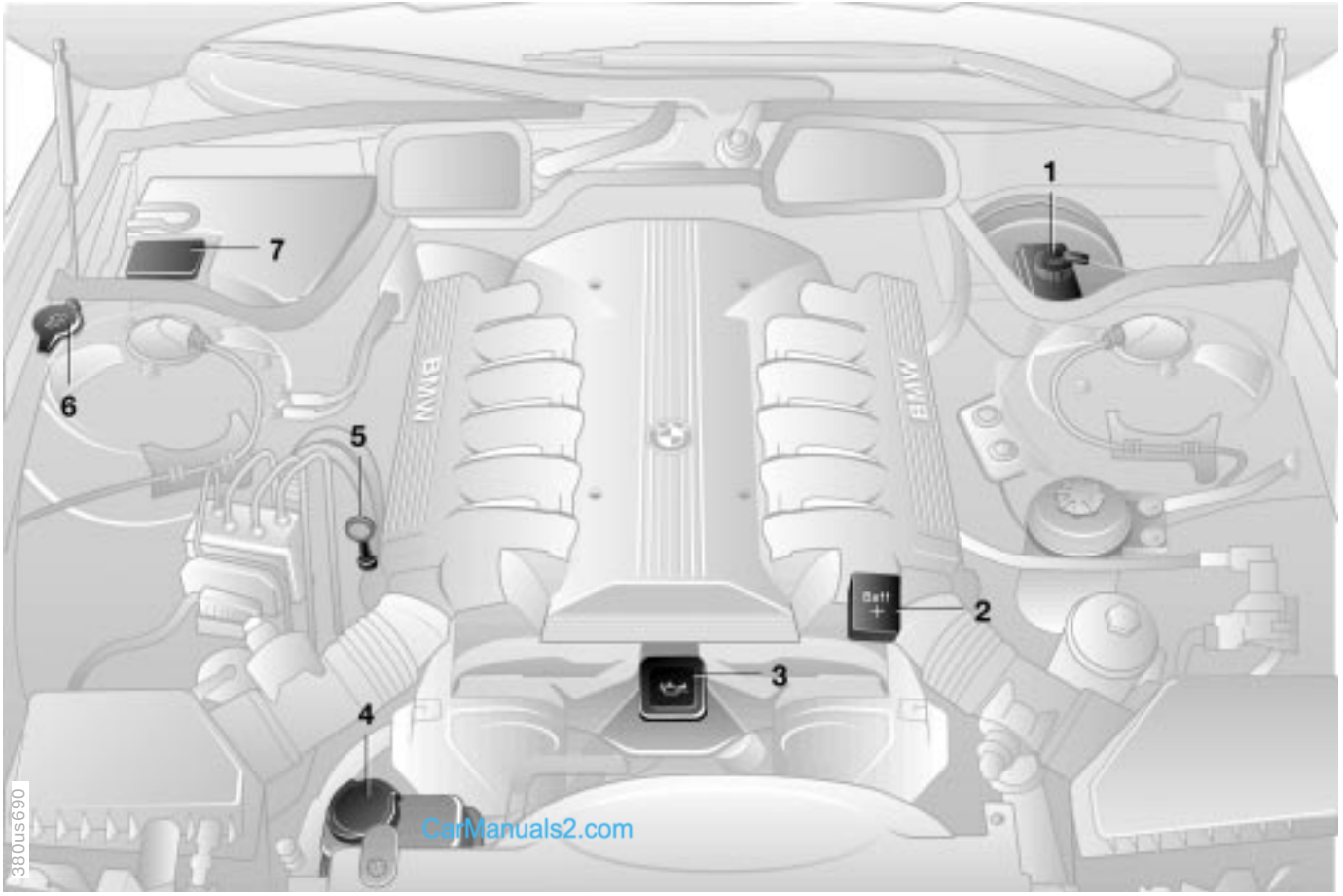

CarManuals2.com

Engine compartment – BMW 750iL

1 Brake fluid reservoir 152
2 Auxiliary terminal for jump starting 183
3 Engine oil filler neck 149
4 Coolant expansion tank 151
5 Engine oil dipstick 149
6 Reservoir for headlamp and windshield washer system 148
7 Fuse box 180

CarManuals2.com

Washer fluids

Headlamp* and windshield washer system

The filling capacity is approx. 4.7 US quarts (4.5 liters) for the windshield washer system or approx. 6.3 US quarts (6.0 liters) together with the headlamp washer system.

Fill with water and – when needed – with a washer antifreeze (according to manufacturer's recommendations).

We recommend that you mix the washer fluid before adding it to the reservoir.◀

Antifreeze agents or intensive windshield cleaning agents for the washer systems are highly flammable. For this reason, keep them away from sources of flame and store them only in their original containers. Store them so that they are inaccessible to children. Comply with the instructions on the containers.◀

CarManuals2.com

Washer nozzles

Windshield washer

The spray from the nozzles should be directed so as to ensure effective cleaning, even at high speeds.

Use a needle to adjust the nozzles as required, or have them adjusted at your BMW center.

Headlamp washer

Have the nozzles adjusted by your BMW center as required.

Online Edition for Part No. 01 41 0 004 597 - © 08/99 BMW AG

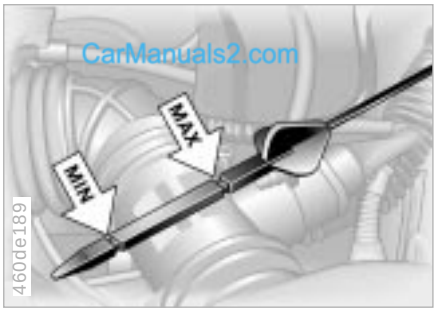

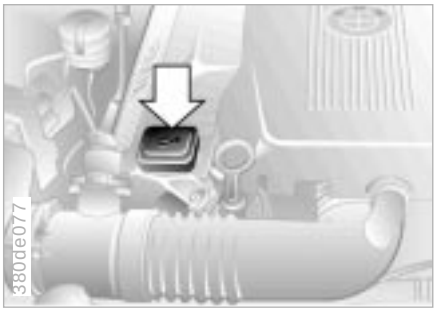

Checking the oil level

1 Park the vehicle on a level surface
2 Shut the engine off after it has reached normal operating temperature
3 After approx. 5 minutes, pull the dipstick out and wipe it off with a clean lint-free cloth, paper towel, or similar material
4 Push the dipstick carefully all the way into the guide tube and pull it out again
5 The oil level should be in between the two graduations on the dipstick.

As with fuel economy, oil consumption is directly influenced by your driving style and vehicle operating conditions.

The oil volume between the two marks on the dipstick corresponds to approx. 1.1 US quarts (1 liter). Do not fill beyond the upper mark on the dipstick. Excess oil will damage the engine.

Adding engine oil

Wait until the level has dropped to just above the lower mark before adding oil. However, do not wait until the oil drops below the lower mark.

⚠ BMW engines are designed to operate without oil additives. The use of additives could lead to damage in some cases. This is also true for the automatic transmission, the differential and the power steering system.◀

Online Edition for Part No. 01 41 0 004 597 - © 08/99 BMW AG

Engine oil specifications

The quality of the engine oil selected has critical significance for the operation and service life of an engine. Based on extensive testing, BMW has approved only certain engine oils.

Use only approved "BMW High-Performance Synthetic Oil."

If you are unable to obtain "BMW High-Performance Synthetic Oil," you can add small amounts of synthetic oil in between oil changes. Only use oils with the API SH specification or higher.

Ask your authorized BMW center for details concerning the specific "BMW High-Performance Synthetic Oil" or other synthetic oils that have been approved.
You can also call BMW of North America at 1-800-831-1117, or visit this webside: www.bmwusa.com to obtain this information.◀

CarManuals2.com

Viscosity ratings

Viscosity is the oil flow rating as established in SAE classes.

The selection of the correct SAE class depends on the climatic conditions in the area where you drive your BMW.

Approved oils are in SAE classes 5W-40 and 5W-30.◀

These oils may be used for driving in all ambient temperatures.

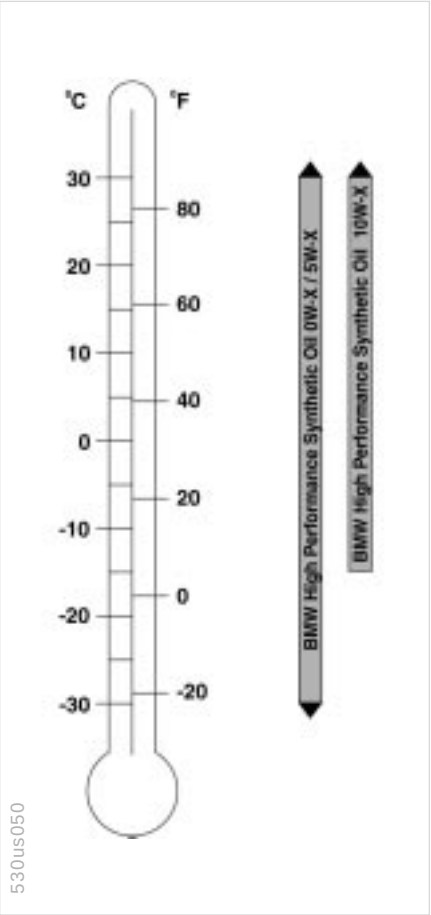

Engine oil

Comply with the applicable environmental laws regulating the disposal of used oil.◀

Recommendation: Have the oil changed by your BMW center.

Continuous exposure to used oil has caused cancer in laboratory testing.
Any skin areas that come into contact with oil should therefore be thoroughly washed with soap and water.
Store oils, greases, and similar materials so that they are inaccessible to children. Comply with all warnings on the containers.◀

Coolant

CarManuals2.com

Do not add coolant to the cooling system when the engine is hot.
Escaping coolant can cause burns.
To avoid the possibility of damage later on, never use anything other than factory-approved, nitrite and amino-free extended-duty antifreeze with corrosion protectant. Your authorized BMW center is familiar with the official specifications.
Antifreeze and anti-corrosion agents are hazardous to health. Store antifreeze and anti-corrosion agents in their original containers where they are inaccessible to children.
Extended-duty antifreeze with corrosion inhibitor contains ethylene glycol - a flammable substance. For this reason, do not spill antifreeze with corrosion inhibitor on hot engine components. It could catch fire and cause serious burns.◀

Comply with the applicable environmental laws regulating the disposal of extended-duty antifreeze with corrosion inhibitor.◀

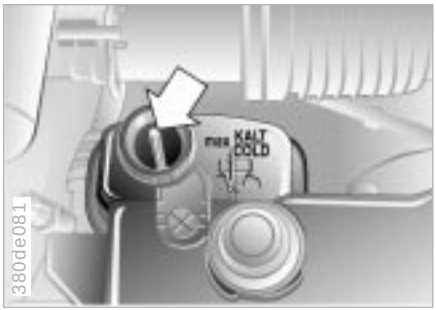

Checking coolant level

Correct coolant level when the engine is cold (approx. 68 °F /20 °C):

Unscrew the cap from the expansion tank.

The coolant level is correct when the end of the red float is aligned with the upper edge of the filler opening (refer to the arrow in the illustration), or max. 0.8 in (2 cm) higher, for instance up to the second mark on the float (see also the schematic diagramm next to the cap).

Coolant

To add coolant

Wait until the engine cools before removing the cap from the expansion tank. The needle of the coolant temperature gauge in the instrument cluster must be located in the blue zone; otherwise, there is a danger of scalding.

1 Start by turning the cap counterclockwise. Pause to allow any accumulated pressure to escape, then remove the cap
2 If the coolant is low, slowly add coolant until the correct level is reached – do not overfill.

The coolant is a mixture of water and extended-duty antifreeze with corrosion inhibitor. Always maintain the prescribed all-season 50:50 mixture ratio for year-round protection against internal corrosion. No other additives are required.

Replace the coolant every four years.

Brake fluid

Brake fluid level

If the brake hydraulic system warning lamp comes on, or if the message "CHECK BRAKE FLUID" appears in the Check Control display: The brake fluid level is too low in the reservoir.

CarManuals2.com

Fill up to upper mark ("MAX" level visible through the transparent reservoir).

Any BMW center can provide you with information on factory-approved brake fluids (DOT 4).

Brake fluid loss results in extended pedal travel. Refer to the information on page 132.

Brake fluid is hygroscopic, that is, it absorbs moisture from the air over time.
In order to ensure the operating safety of the brake system, have the brake fluid changed every two years by your BMW center. Refer also to the Service and Warranty Information Booklet (US models) or to the Warranty and Service Guide Booklet (Canadian models).
Brake fluid is toxic and damages the vehicle's paint. Always store brake fluid in the original containers. Keep the containers tightly closed and out of reach of children.
Do not spill brake fluid. Do not fill beyond the "MAX" level in the reservoir. The brake fluid could ignite upon contact with hot engine parts and cause serious burns.◀

Comply with the applicable environmental laws regulating the disposal of brake fluid.◀

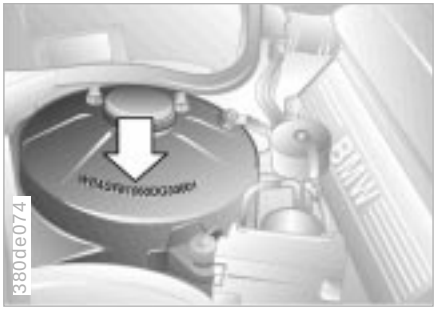

In the engine compartment, stamped on the right-hand strut dome (arrow) and on the upper edge of the instrument panel on the left side.

CarManuals2.com

The BMW Maintenance System

The BMW Maintenance System has been designed as a reliable means of providing maximum driving and operating safety – and as cost-effectively as possible for you.

Please keep in mind that regular maintenance is not only necessary for the safety of your vehicle, but also plays a significant role in maintaining the resale value of the vehicle.

Service Interval Display

Advanced technology is employed to calculate the optimal maintenance intervals, which are then indicated in the Service Interval Display. While conventional systems rely on distance traveled alone to determine when service is due, the BMW Maintenance System has for years considered the actual conditions under which the vehicle operates.

From the point of view of maintenance, 62,000 miles (100,000 km) accumulated in short-distance urban driving are not the equivalent of the same distance covered at moderate speeds in long-distance highway travel. In response to this fact, the BMW Maintenance System monitors operating conditions as the basis for determining the optimum service intervals for your individual vehicle.

The BMW Maintenance System includes the Engine Oil Service and Inspections I and II.

Determining the maintenance intervals according to the actual loads on the car covers every kind of operating situation. However, even those who drive only short distances – significantly less than 6,200 miles (10,000 km) annually – should have the engine oil changed at least every 2 years since oil deteriorates over time, regardless of use.

CarManuals2.com

Service and Warranty Information Booklet (US models)/Warranty and Service Guide Booklet (Canadian models)

Please refer to the Service and Warranty Information Booklet (US models) or to the Warranty and Service Guide Booklet (Canadian models) for additional information on maintenance intervals and procedures.

Depending upon operating conditions, it may be a good idea to have the body checked for stone damage and chips at the same time as a precaution against rust.

▷ Have your BMW center do the maintenance and repair. Your BMW center is always informed on the latest maintenance work and repair techniques and equipped with the required special tools. In addition, checking parts known from experience to be subject to wear is a permanent part of the maintenance specifications. Be sure that all maintenance work is confirmed in the Service and Warranty Information Booklet (US models) or in the Warranty and Service Guide Booklet (Canadian models). These entries will constitute your proof that the vehicle has received regular maintenance. They are also required in the event of a warranty claim.◀

Online Edition for Part No. 01 41 0 004 597 - © 08/99 BMW AG

Washing your car

You can have your new BMW washed in an automatic car wash. Car wash systems that do not employ brushes are preferable.

Wipe away tough dirt and loosen and remove dead insects before washing the car.

To prevent spots, avoid washing when the hood is still warm, or immediately after and during exposure to strong sunlight.

When using an automatic car wash, be sure that:

- The car wash system is suited for the dimensions of your vehicle
- No damage will occur on vehicles with attached body accessories (such as spoilers or antennas). If you are uncertain, consult the manager of the car wash
- The wheels and tires of your vehicle cannot be damaged by the conveyance devices of the car wash system
- The vehicle is cleaned with minimum brush pressure, and that ample water is available for washing and rinsing.

Vehicles with rain sensor*:
Clean the windshield regularly. Wax from automatic car washes or insects, for example, can cause malfunctions in the function of the rain sensor.

CarManuals2.com

Turn the rain sensor off in automatic car washes. If you do not, damage may occur if the wipers switch on unintentionally.◀

Parts of the car that are inaccessible to the automatic washer – such as door sills, door and hood edges, etc. – should be cleaned by hand.

In the winter months, it is especially important to ensure that the car is washed on a regular basis. Large quantities of dirt and road salt are difficult to remove, and they also cause damage to the vehicle.

If spray wands or high-pressure washers are used, be sure to maintain an adequate distance between the spray source and the vehicle's surface.
Inadequate distance and excessive pressure can damage or weaken the finish, making it more susceptible to subsequent attack. In addition, moisture could penetrate to vehicle components, leading to long-term damage.◀

When cleaning the headlamps, please observe the following:

- Do not clean by wiping with a dry cloth (this causes scratches). Never use abrasives or strong solvents to clean the covers
- Remove dirt and contamination (such as insects) by soaking with BMW Car Shampoo and then rinsing with plenty of water
- Always use a deicer spray to remove accumulated ice and snow – never use a scraper.◀

After washing the car, apply the brakes briefly to dry them. Braking efficiency might otherwise be reduced by the moisture, and the brake rotors could also be corroded.◀

Exterior finish

To provide effective corrosion protection, multilayer paintwork is applied at the factory. Cataphoretic immersion priming techniques are supplemented using special body-cavity protectants, with the application of specially-developed and extensively tested materials. A layer of flexible PVC is first applied to the undercarriage. Following this, a comprehensive undercoating treatment with a wax-based protectant is applied.
Regular maintenance makes an important contribution to maintaining the safety and value of your vehicle.

Increasing awareness of the effects of harmful environmental factors on a vehicle's exterior finish have led paint and vehicle manufacturers to initiate programs designed to further improve the durability of their finishes. Despite this, environmental factors that occur locally or regionally can have negative effects on the finish of your vehicle. These should guide you in determining the frequency and extent of your efforts to maintain the vehicle finish.

CarManuals2.com

Depending upon material and type of impact (perforation of paint layer), physical stresses from sand, road salt, gravel, etc., can cause corrosion to start extending beneath the finish, starting at the point of impact.

Road dirt, tar spots, dead insects, animal droppings (strong alkali effect) and tree excretions (resins and pollen) all contain substances capable of causing damage when allowed to remain on the finish of your car for any period of time (spots, etching, flaking, separation in the top coat).

In industrial areas, deposits of flue dust, lime, oily soot, precipitation containing sulfur-dioxide (acid rain) and other environmental pollutants will damage the car's finish unless adequate care is provided – even though this is generally limited to the outside horizontal surfaces.

In coastal regions, high levels of atmospheric salt and humidity promote corrosion.

In tropical zones, temperatures of over 105 °F (40 °C) in the shade prevail, in addition to heavy ultraviolet radiation and high humidity. Under those circumstances, light exterior finishes reach temperatures of up to 175 °F (80 °C) and dark finishes up to 250 °F (120 °C).

Online Edition for Part No. 01 41 0 004 597 - © 08/99 BMW AG

Caring for the vehicle finish

Regular washing is a preventive measure against long-term effects from substances that are harmful to the vehicle's finish, especially if you drive your vehicle in areas with high levels of air pollution or aggressive natural substances (tree resins, pollen).

Nevertheless, you should immediately remove especially aggressive substances. Failure to do so can lead to changes in the paint's chemical structure or to discoloration. Gasoline spilled during refueling, oil, grease and brake fluid should always be cleaned away immediately, as should bird droppings. All of these substances cause damage to the finish.

Any contamination remaining on the surface of the vehicle will be especially conspicuous after washing. Use cleaning fluid or alcohol with a clean cloth or cotton pad to remove. Remove tar spots with tar remover. After cleaning, the affected areas should be waxed to ensure continued protection.

▷ Use cleaning and car-care products that you can obtain at your BMW center.◀

Waxing your car

CarManuals2.com

Protect the finish using carnauba or synthetic-based waxes only.

The best way to determine when the finish needs to be waxed is by noting when water stops beading on the surface.

You can use a glass cleaner to remove any wax or silicone that may have been left on the windows during waxing.

▷ Use cleaning and car-care products that you can obtain at your BMW center.◀

Paint damage

You can touch up small areas of damage with BMW spray paint or a BMW touch-up stick.

The color code of your vehicle is located on a tag near the vehicle's data plate and on the first page of the Service and Warranty Information Booklet (US models) or of the Warranty and Service Guide Booklet (Canadian models).

Damage caused by flying stones, scratches, etc., must be touched up without delay to prevent rust from forming.

If corrosion has started to form in an area with paint damage, remove all rust and clean the area. Then prime the area with a BMW Primer Stick. Finally, apply the finish coat. Wait a few days, then polish the repaired area. Finish by applying a wax preservative.

More extensive paint damage should be repaired professionally in accordance with the manufacturer's instructions. Your BMW center uses original BMW finish materials in accordance with approved repair procedures.

Window care

You can use window and glass cleaner to clean interior window surfaces and mirrors without streaking. Never use polishing pastes or abrasive (quartz) cleansers on mirror lenses.

CarManuals2.com

Break-resistant security glass

The glass used for the side windows is designed to provide resistance to breakage and protection against vandalism. These break-resistant windows contain several layers of a transparent plastic film which is sandwiched between the inner and outer glass panes. There is also one additional plastic film on the inside of the glass pane (facing the passenger compartment). This film prevents shards of glass from spreading into the passenger compartment if the window is shattered.

Please observe the following precautions pertaining to this film when caring for the interior glass surfaces:

- The film is not scratch-resistant. For this reason, do not touch the glass with sharp objects which could damage the film
- Clean the glass with clean water. If necessary, you may also use regular household window cleaners. Wipe the cleaner off immediately.
  Do not use window cleaners containing solvents or abrasives. These cleaners can mar the film
- Do not apply any self-adhering decals, adhesive labels or other stickers with tape to the inner window surface
- Do not apply colored films to the inside surfaces of the side windows
- If the windows are fogged or iced over in cold or humid climates, do not use an ice scraper or ice-removing sprays to clean them. Start the engine and refer to the instructions for defrosting the door windows.◀

Clean the wiper blades with soapy water. The wiper blades should be replaced twice a year, before and after the cold season. This is especially important for vehicles with a rain sensor.

Use only wiper blades approved by BMW.◀

Caring for other vehicle components and materials

Light-alloy wheels should be treated with alloy wheel cleaner, especially during the winter months. However, do not use aggressive products containing acids, strong alkalis or abrasives. Do not use steam cleaners operating at temperatures above 140 °F (60 °C). Follow the manufacturer's instructions.

If your vehicle has chromed parts* such as window moldings, door handles or other parts, clean these parts especially carefully with ample clean water, especially if they have an accumulation of road salt. You may wish to add a car shampoo supplement to the water. Use a chrome polish for an additional treatment.

Plastic components, vinyl upholstery, headliners, lamp lenses, the clear cover of the instrument panel and components with a sprayed dull black surface can be cleaned with water (add plastic cleaner as required). Do not allow moisture to soak through the seats or headliner. Never use solvents such as lacquer thinner, heavy-duty grease remover, fuels, etc.

Rubber components should be cleaned with water only; a rubber treatment or silicone spray may also be applied.

The safety belts should be cleaned with a mild soap and water solution without being removed from the car. Never attempt chemical or dry cleaning, as damage to the belt fabric could result.

After cleaning, never allow the inertia reel to retract the belts until they are completely dry. Dirty safety belts prevent the inertia reel mechanism from retracting the strap properly, and thus constitute a safety hazard.

Heavily soiled floor carpets and mats* can be cleaned with an interior cleaner. The floor mats can be removed from the vehicle for cleaning.

Please use only a damp cloth to clean wooden fascia panels and components. Follow up by drying with a soft cloth.

▷ Use cleaning and car-care products that you can obtain at your BMW center. ◀

Leather care

The leather upholstery used by BMW is a natural product of the highest quality, processed using state-of-the-art methods to ensure that it will maintain its high quality for years to come, provided that it is properly cared for.

Because this product is manufactured using natural materials, you must make allowance for its special characteristics as well as for the peculiarities of its use and care.

Regular periodic cleaning and care are essential, as dust and road dirt act as abrasives in the pores and creases of the material. This leads to wear spots and premature brittleness on the surface of the leather. We therefore suggest that you clean the leather with a vacuum cleaner or dust cloth at frequent intervals.

For cleaning, use BMW leather cleaning foam.

CarManuals2.com

Since dirt and grease gradually attack the protective layer of the leather, the cleaned surfaces should be treated with BMW leather care agent. This also acts as an antistatic agent.

For protection against dampness or moisture, treat the leather with a BMW impregnating agent.

We recommend that you perform this procedure twice a year on leather exposed to normal use.

Spills should be wiped up immediately. Remove grease and oil stains without rubbing by carefully dabbing with a cloth soaked in spot remover.

If the upholstery is to be exposed to intense sunlight or if the vehicle is to be stored for an extended period, cover all leather surfaces (or, better yet, the windows) to prevent fading.

Cleaning agents can contain substances that are dangerous or pose health risks. Therefore, always comply with the warnings and danger notices on the package.
Open the doors or windows on your vehicle when cleaning the interior. Never clean your vehicle with solvents or other materials not specifically intended for this application.◀

CarManuals2.com

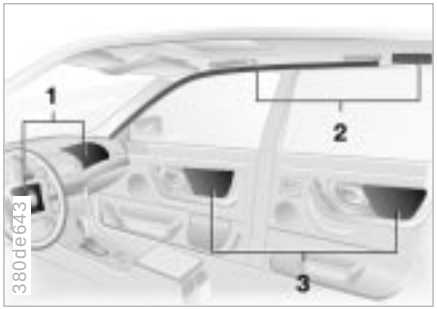

1 Front airbags for driver and front passenger

2 Side impact head protection system (front and rear*)

3 Side airbags (front and rear*)

Important safety notices

Do not attempt to remove the gas generators of the airbag restraint system from the vehicle. Have testing and service procedures performed by specially-qualified technicians only. In the event of a malfunction, deactivation, or triggered actuation (as a response to an accident) of the airbag restraint system, consult a BMW center for repairs or service operations.

Modifications may not be made on either the wiring or the individual components in the airbag system. These include the padded steering wheel hub, the instrument panel, the side trim panels of the front or rear doors and the roof pillars or the sides of the headliner. Never apply adhesive materials to these components or cover or modify them in any way. Do not attempt to remove or dismantle the steering wheel.
To ensure compliance with official safety regulations, entrust disposal of airbag generators to a BMW center. Unprofessional attempts to service the system could lead to failure in an emergency or undesired airbag activation, either of which could result in personal injury.◀

CarManuals2.com

The side airbags in the rear* of your vehicle are deactived. If you wish, you can have them acticated. Please consult your BMW center.◀

Consult your BMW center regarding the required special procedures if you intend to store the vehicle for longer than three months.

Any BMW center will be glad to inform you of the advisability, legal requirements and factory recommendations with regard to technical modifications on the car. For this purpose, the BMW center requires the Vehicle Identification Number and, in some cases, also the engine number.

Light-Emitting Diodes (LEDs)

Light-emitting diodes installed behind translucent lenses serve as the light source for many of the controls and displays in your vehicle. The concept behind their operation is related to that employed for lasers, and they are officially designated as Class 1 light-emitting diodes.

Do not remove the protective lens and avoid staring directly at the unfiltered beam for extended periods (several hours), as inflammation of the iris could result.◀

CarManuals2.com

OBD connector

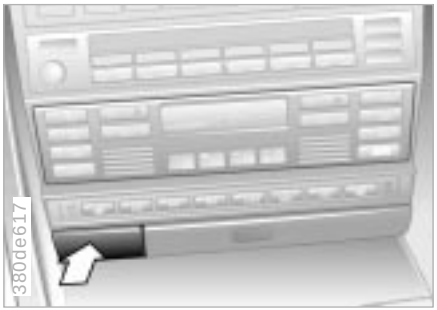

The interface socket for the onboard diagnosis system is located beneath a cover on the center console front panel (arrow).

A sticker with the letters "OBD" is attached to the cover.

The purpose of the OBD (Onboard Diagnostic) system is to assure proper emission control system operation for the vehicle's lifetime by monitoring emission-related components and systems for deterioration and malfunction.

SERVICE ENGINE SOON

An illuminated "Service Engine Soon" lamp informs you of the need for service, not of the need to stop the vehicle. However, the systems should be checked by your BMW center at the earliest possible opportunity.

CarManuals2.com

Under certain conditions, the indicator will blink or flash. This indicates a rather severe level of engine misfire. When this occurs, you should reduce speed and consult the nearest BMW center as soon as possible. Severe engine misfire over only a short period of time can seriously damage emission control components, especially the catalytic converter.

"Service Engine Soon" warning lamp for Canadian models.

▷ When the filler cap is not properly tightened, the OBD system can detect the vapor leak and the indicator will light up. If the filler cap is subsequently tightened, the indicator should extinguish within a few days.◀

CarManuals2.com

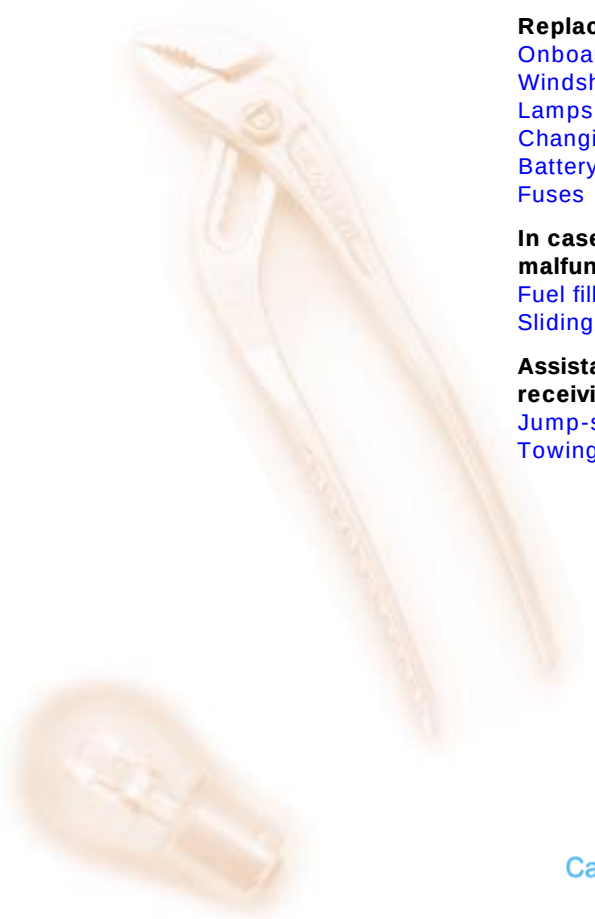

Replacement procedures:
Onboard tool kit 166
Windshield wiper blades 166
Lamps and bulbs 167
Changing tires 173
Battery 176
Fuses 180

In case of electrical malfunction:
Fuel filler door 182
Sliding/Tilt sunroof 182

Assistance, giving and receiving:
Jump-starting 183
Towing the vehicle 184

CarManuals2.com

Onboard tool kit

The onboard tool kit is located in the luggage compartment lid.

Loosen the wingnut to open.

Windshield wiper blades

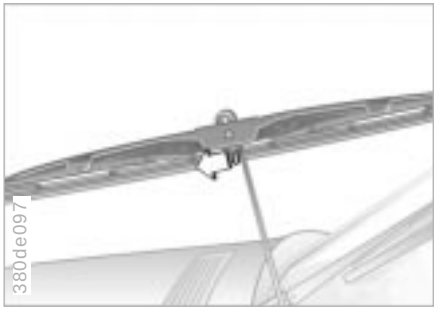

1 Move the wiper to the fold-out position (refer to page 72)
2 Fold the wiper arm completely out
3 Position the wiper blade at an angle and pull the release spring (arrow)
4 Fold the wiper blade down and unhook it toward the windshield
5 Pull the wiper blade past the wiper arm toward the top
6 Insert a new wiper blade and apply pressure until you hear it engage.

Use only wiper blades approved by BMW.◀

Fold the wipers back onto the windshield before turning the ignition key to position 1 or 2. If you do not, they could be damaged.◀

CarManuals2.com

Lamps and bulbs

The lamps and bulbs make essential contributions to the safety of your vehicle. Observe the following instructions during bulb replacement carefully. If you are not familiar with any of the procedures, consult your BMW center.

Do not touch the glass portion of a new bulb with your bare hands since even small amounts of impurities burn in to the surface, thus reducing the service life of the bulb. Use a clean cloth, paper napkin, or a similar material, or hold the bulb by its metallic base.◀

A replacement bulb set is available from your BMW center.

Whenever working on the electrical system, switch off the electrical accessory you are working on or disconnect the cable from the negative terminal of the battery. Failure to do this could result in short circuits.
To prevent injuries and damage, comply with any instructions provided by the bulb manufacturer.◀

CarManuals2.com

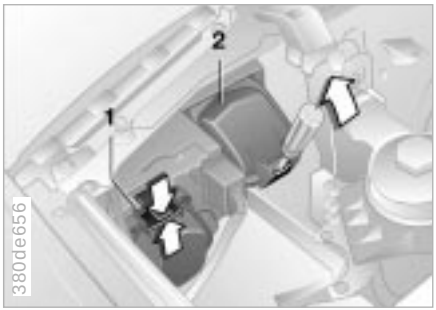

The illustration shows the left-hand side of the engine compartment.

Release the lamp cover

1 Low beams

Press the tabs together (arrows).

2 High beams

Insert the screwdriver (from the on-board tool kit) and press in the direction of the arrow.

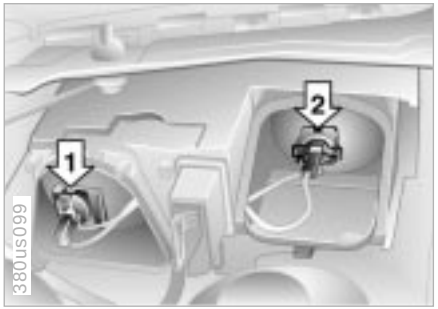

For checking and adjusting headlamp aim, please contact your BMW center.◀

1 Low beam headlamps

H1 bulb, 55 watt

2 High beams

H7 bulb, 55 watt

The H7 bulb is pressurized. Therefore, wear safety glasses and protective gloves. Failure to observe this precaution could lead to injury if the bulb is accidentally damaged during replacement.◀

1 Remove the cover
2 Pull off the connector at the bulb
3 Detach the wire clamp
4 Replace the bulb
5 Reassemble in reverse order.

Parking lamp

5 watt bulb

1 Pull out the bulb holder
2 Pull off the bulb and replace it.

When cleaning the headlamps, please observe the following:

- Do not clean by wiping with a dry cloth (scratches). Never use abrasives or strong solvents to clean the covers
- Remove dirt and contamination (such as insects) by soaking with BMW Car Shampoo and then rinsing with plenty of water
- Always use a deicer spray to remove accumulated ice and snow – never use a scraper.◀

CarManuals2.com

Xenon lamps*

The service life of these bulbs is very long and the probability of a failure is very low, provided that they are not switched on and off an unusual number of times. If one of these bulbs should nevertheless fail, it is possible to continue driving with great caution using the fog lamps, provided traffic laws in your area do not prohibit this.

Because of the extremely high voltages involved, any work on the lighting system should be carried out by technically-qualified personnel only. Otherwise, there is a risk of fatal injury.◀

Turn signals/Parking lamps (side marker lamps), front

Dual-filament bulb, 21 watt

1 Remove the assembly cover
2 Insert a Philips-head screwdriver (arrow) all the way in and loosen the screw (about four turns)
3 Remove the light assembly toward the front
4 Release and remove the bulb holder
5 Press gently on the bulb, turn it to the left and remove
6 When you have replaced the bulb, plug the light into the reliefs on the headlamp with the tabs. Push the assembly into place and tighten the screw
7 Secure the assembly cover.

CarManuals2.com

Side turn signals

5 watt bulb

1 Use a screwdriver to pry out the lamp at the rear edge
2 Apply gentle pressure to the bulb while turning it to the left to remove.

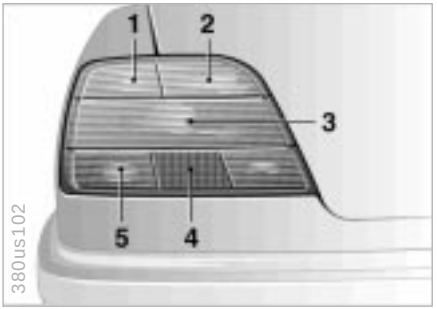

Front fog lamps

H3 bulb, 55 watt

1 Use a screwdriver to release the fog lamp retainer (arrow)
2 Pull the fog lamp out toward the front
3 Release and remove the cover on the rear of the lamp assembly
4 Remove the plug
5 Detach the wire clamp
6 Replace the bulb
7 After replacing the bulb, guide the lamp assembly back into position. Continue pressing until you hear the detent snap into place.

Tail lamps

Tail lamp: 5 watt bulbs
Remaining bulbs: 21 watt

1	Turn signal	yellow
2	Backup lamp	white
3	Rear lamp assembly/ Side marker lamps	red
4	Reflector	red
5	Brake lamp	red

In the event of a failure of both lamps of a rear lamp assembly, the brake lamp assumes the function of the tail lamps.◀

1 Use the upper handle to fold down the side panel in the luggage compartment
2 Once you have found the lamp holder for the defective bulb, push it gently to the rear while turning to the left to remove
3 Use the same procedure to remove the bulb.

CarManuals2.com

Online Edition for Part No. 01 41 0 004 597 - © 08/99 BMW AG

Center (high-mount) brake lamp

21 watt bulb

1 Open the luggage compartment lid
2 Remove the grommet from the lamp holder below the rear parcel tray
3 Press the lamp holder gently while turning to the left to remove
4 Use the same procedure to remove the bulb.

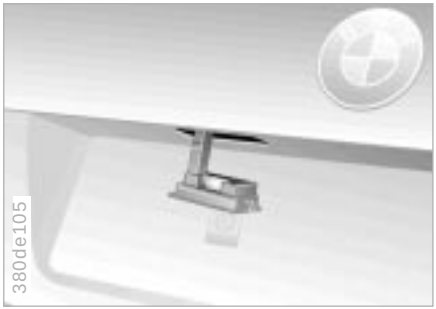

License plate lamps

5 watt bulb

1 Apply a screwdriver to the narrow side of the lamp to pry it out
2 Replace the bulb.

Interior lamps

Front:

Interior lamp (10 watt bulb) with reading lamps (10 watt bulbs)

1 Interior lamp: Use a screwdriver to press out the lamp sideways and remove the lens. Pull the bulb out of the contact studs
2 Reading lamp: Gently press against the lamp while turning it to the left to remove.

Rear:

Interior lamp (10 watt bulb) with reading lamp (5 watt bulb)

1 Use a screwdriver at the top of the recesses to press out the light
2 Interior lamp: Push the tab back on the reflector and change the bulb
3 Reading lamp: Gently press against the lamp while turning it to the left to remove.

Indirect lighting (1 watt bulb)

1 Unclip the lamp holder
2 Replace the bulb.

CarManuals2.com

Footwell lamps

5 watt bulb

1 Use a screwdriver to remove the lens to the side
2 Replace the bulb.

Door warning lamps

5 watt bulb

1 Apply a screwdriver to the narrow side of the lamp to pry it out
2 Turn the bulb holder to the left to remove
3 Replace the bulb.

Door handle lamps

Please contact your BMW center in the event of a malfunction.

Glove compartment lamp

5 watt bulb

CarManuals2.com

1 Apply a screwdriver to the recess to pry the lamp out
2 Remove the reflector
3 Replace the bulb.

Luggage compartment lamps

10 watt bulbs

Lamps on the underside of the package tray and in the luggage compartment lid:

1 Apply a screwdriver to the recess to pry the lamp out
2 Remove the reflector
3 Replace the bulb.

Online Edition for Part No. 01 41 0 004 597 - © 08/99 BMW AG

Safety measures in the event of a flat tire or wheel change:
Stop the vehicle as far as possible from passing traffic. Park on a firm, flat, surface.
Switch on the hazard flashers.
Turn the steering wheel to the straight-ahead position, remove the key and engage the steering lock. Make sure that the selector lever is in Park, and engage the parking brake.
All passengers should be outside the car and well away from your immediate working area (for instance, behind a guardrail).
If a warning triangle or portable hazard warning lamp is available, set it up on the roadside at an appropriate distance from the rear of the vehicle.
Comply with all safety guidelines and regulations.
Change the wheel only on a level, firm surface which is not slippery. Avoid jacking the car on a soft or slippery support surface (snow, ice, loose gravel, etc.), since it could slide sideways.

Position the jack on a firm support surface.
Do not place wooden blocks or similar objects under the jack. If this is done, the jack might not be able to reach its full support capacity because of the limited height. Do not lie under the vehicle or start the engine when the vehicle is supported by the jack – risk of fatal injury.◀

CarManuals2.com

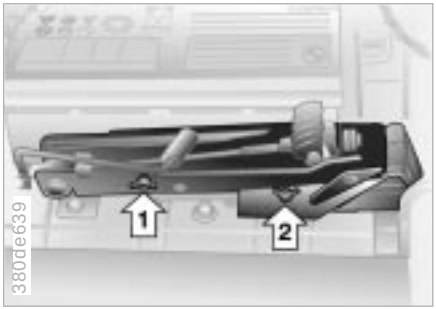

What you will need

In order to avoid rattling noises later, note the position of the tools when you remove them and return them to their original position when you are through using them.

▷ Car jack
Fold the right-hand trim panel of the luggage compartment down using the handle at the top.
Loosen the wing nut (arrow 1).
When you have completed work, screw the jack all the way back down. Fold the handle back and insert it in its holder

▷ Wedge (wheel chock)
Next to the battery, under the jack.
Remove the jack and loosen the wing nut (arrow 2)

▷ Spare tire and adapter* for removal of the lug bolt cover*
Both are stored in the luggage compartment below the floor mat. Fold back the mat for access.
Remove the adapter (arrow), unscrew the wing nut by hand and remove the wheel

▷ Wheel lug wrench, alignment tool and screwdriver
Are in the onboard tool kit on the underside of the luggage compartment lid (refer to page 166).

Procedure

1 Read and comply with the safety precautions stated on the previous page
2 Secure the vehicle to prevent it from rolling:
Place the wedge against the rear surface of the front tire on the side opposite the side being raised. If the vehicle is parked on a downward slope, place the wedge securely in front of the tire. If the wheel must be changed on a surface with a more severe slope, take additional precautions to secure the vehicle from rolling

3 If equipped with adapters*: Place the adapter on the lug bolt cover, position the lug wrench and press to the left (refer to the illustration)
4 Wheels with hub cover*: Pry the hub cover off with the screwdriver in the slot
5 Loosen the lug bolts 1/2-turn

CarManuals2.com

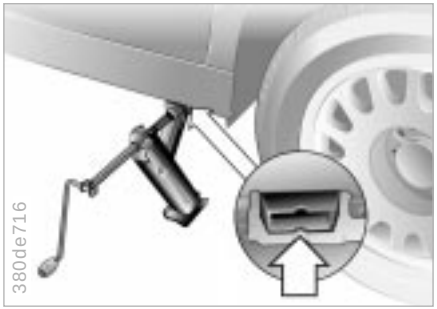

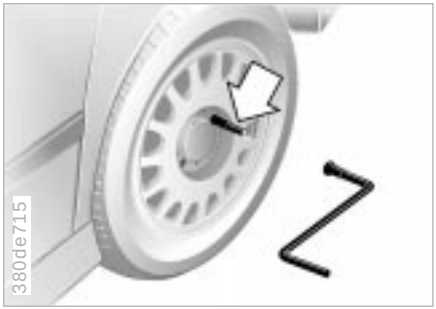

6 Position the jack at the jacking point closest to the flat tire (refer to the arrow on the sill trim) so that the jack base is vertically below the jacking point and the entire surface of the head of the jack will move into the square recess of the jacking point (refer to the illustration detail) when the jack is cranked
7 Jack the car up until the wheel you are changing is raised from the ground
8 Unscrew the lug bolts and remove the wheel
9 Remove accumulations of mud or dirt from the mounting surfaces of the wheel and hub; clean the lug bolts
10 Take the alignment tool from the onboard tool kit and insert it together with the plastic insert into one of the bolt sockets (arrow)
11 Position the spare wheel on the hub. Screw at least two lug bolts finger-tight into opposite bolt holes. Remove the alignment tool
12 Screw in the remaining lug bolts. Tighten all the bolts securely
13 Lower the jack and remove it from beneath the car
14 Tighten the lug bolts, alternating between bolts positioned opposite one another
15 Wheels with hub covers: Position the hub cover and press on tightly
16 If equipped with lug bolt covers: Align the arrow on the cover with the line in the wheel and press the cover into place
17 Check and correct the air pressure as soon as possible.
For vehicles with Tire Pressure Control (RDC)*:
Reactivate the system after mounting either the spare tire or after inflating tire(s) to proper pressure.
Refer to page 98.

CarManuals2.com

Changing tires

The vehicle jack is designed for changing tires only. Do not attempt to raise another vehicle model with it or to raise any load of any kind. To do so could cause accidents and personal injury.
Have the lug bolts checked for proper tightness with a calibrated torque wrench at the earliest possibility (torque specification: 72 lb-ft/100 Nm).◀

When storing the wheel, take care to ensure that you do not damage the retaining pin in the spare tire recess.

When light-alloy wheels other than Original BMW light-alloy wheels are fitted to the car, it may be necessary to use different lug bolts.

Replace the defective tire as soon as possible and have the new wheel/tire balanced.

Battery

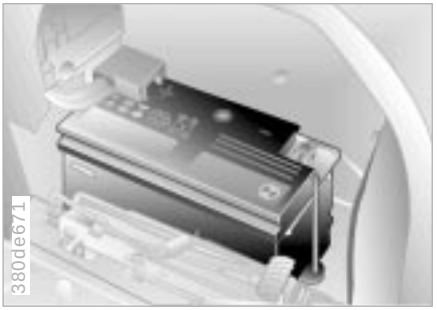

Installation location, BMW 740i/L

The battery is located behind the right-side trim panel in the luggage compartment.

Grasp the handle in the upper panel and fold it down.

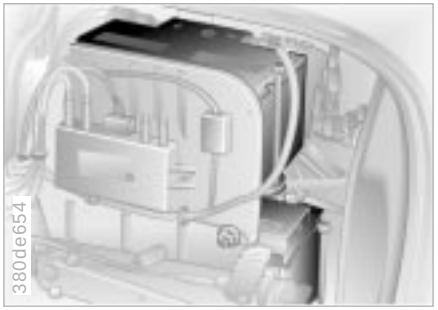

Installation location, BMW 750iL

Two batteries are installed in the BMW 750iL. They are located in the luggage compartment behind the right side trim panel.

To check the charge condition or for removal or installation, please consult your BMW center.◀

CarManuals2.com

Maintenance

The battery is absolutely maintenance-free. This means that the original electrolyte will normally last for the service life of the battery under moderate climatic conditions.

Symbols

You will find the following symbols on your car battery. To avoid injury, please observe the corresponding precautions whenever you work with or near the battery.

Please read the following information before working with the battery.

Wear eye protection. Do not allow particles containing battery acid or lead to come into contact with your eyes, your skin, or your clothing.

Battery acid is extremely corrosive. Wear eye protection and protective gloves. Do not tip the battery. Battery acid can leak from the ventilation openings.

Be sure that children keep well away from batteries and battery acid.

Never allow sparks or open flame, and do not smoke in the vicinity of the battery.

Avoid sparks from electrical cables or electrical equipment. Turn the key to position 0 in the steering lock when the battery is disconnected or connected. Do not short circuit the battery terminals. This creates a risk of personal injury from high-voltage sparks.

A highly-explosive gas is generated when the battery is charged.

CarManuals2.com

If you happen to get acid in your eyes, rinse thoroughly for 15 minutes with clear water. Consult a physician immediately. If you get acid spray on your skin or clothing, rinse with plenty of water. If electrolyte is accidentally ingested, consult a physician immediately.

In order to protect the battery case from ultraviolet radiation, do not place it in direct sunlight.

A discharged battery can freeze. Store the battery in areas where temperature remains above freezing.

Charge condition – BMW 740i/L

You can read the charge condition of the battery with the "Magic Eye*" (a hydrometer):

- Green: Adequate charge
- Black: Not charged adequately. The battery must be recharged. Please contact your BMW center
- Yellow: Replace the battery.

The service life specified for the battery can be achieved only if it is always kept adequately charged. Check the charge condition of the battery frequently if the vehicle is used primarily for driving short distances.◀

Charging the battery

Charge the battery in the vehicle only when the engine is off. Charge the battery using the supplementary positive terminal and ground (terminal) in the engine compartment (refer to "Jump-starting" on page 183).

On the BMW 750iL, there is an automatic switch between the two batteries during charging.

Before performing any work on the electrical system, disconnect the cable from the negative terminal. If you do not, short circuits can create the risk of fire or personal injury.
If a jump start is necessary, connect the cables only to the auxiliary terminal for jump starting and a ground in the engine compartment in order to avoid damage to the batteries (refer to "Jump-starting" on page 183).◀

If you plan to park the vehicle longer than 4 weeks, disconnect the battery from the vehicle's electrical system by disconnecting the cable from the negative terminal. Then have the battery charged with an appropriate battery charger.

If the vehicle will not be driven for a period longer than 12 weeks, have the battery removed, charged and store it in a clean and cool (frost-free) area. Recharge the battery at least every three months during storage. Also, recharge the battery before it is installed. If you fail to do so, it will not be serviceable. Every time the battery is discharged, especially over extended periods, its service life is reduced.

Avoid environmental pollution when disposing of old batteries.◀

Return used batteries to a recycling point or to your BMW center. Maintain the battery in an upright position for transport and storage. Secure the battery against tilting in transit.◀

CarManuals2.com

Removal and installation

Do not disconnect the battery when the engine is running. Disconnecting the battery cable when the engine is running will cause a voltage surge that will damage the vehicle's on-board electronics.
Do not make any modifications in the wires to the positive terminal. If you do so, the protective function of the safety battery terminal is no longer ensured. Repairs and disposal may only be performed by specially-trained personnel.◀

BMW 750iL: Please contact your authorized BMW center for additional information.

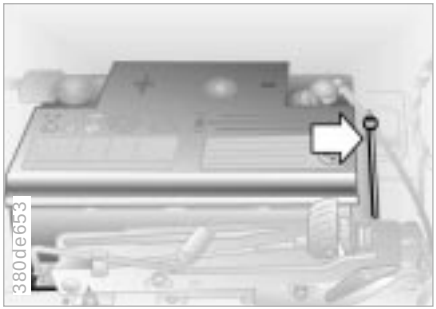

BMW 740i/L: When removing the battery, disconnect the negative terminal first, then the positive terminal.

Unscrew the battery retaining clamp (arrow).

CarManuals2.com

When installing the battery, connect the positive terminal first, then connect the negative terminal.

When installing a battery, be sure that it is mounted properly. If the battery is not mounted properly, it will not be adequately secured in case of an accident.◀

If an electrical accessory should fail, switch it off and check the fuse.

In the engine compartment

1 Open the hood. Press the cover fasteners (arrows) forward and open the cover
2 Use the plastic tweezers (located on the inside of the cover) to remove the fuse for the accessory or equipment that has stopped working from its socket
3 If the fuse is burned through (the metal strip is melted and separated), replace it with a new fuse of the same ampere rating (color code).

A list of the fuses, their respective ampere ratings and the equipment in their circuits is provided next to the fuse box.

CarManuals2.com

When you close the fuse box, be sure that the cover is seated securely.

Additional fuses are provided in the luggage compartment (refer to the next page).

The fuse for continuous positive current is located in a separate fuse box above the battery. If this fuse is defective, refer the problem to your BMW center for repair.

⚠ Do not attempt to repair a burned fuse or replace it with a fuse having a different color or amperage rating. To do this could cause a fire in the vehicle resulting from a circuit overload.◀

If the fuse fails repeatedly, refer the problem to your BMW center for repair.

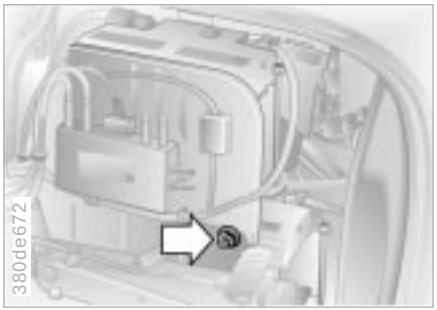

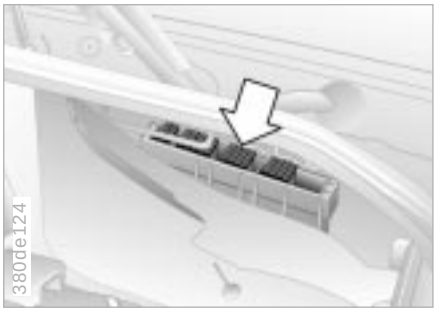

In the luggage compartment

1 Fold down the right-hand trim panel with the upper handle
2 BMW 750iL: Unscrew the hexagon nut (arrow), lift the battery support up slightly and swing it inward together with the battery
3 Move the sound insulation material slightly to the side.

A list of the fuses, their respective ampere ratings and the equipment in their circuits is provided on the rear of the side trim.

CarManuals2.com

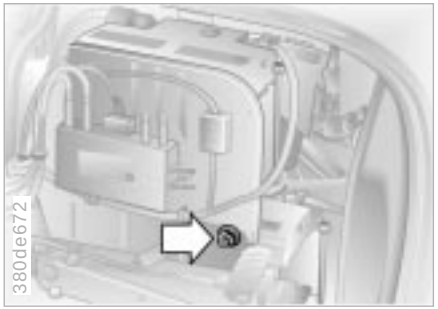

Manual release

1 Use the handle to lower the trim panel on the right side of the luggage compartment
2 BMW 750iL: Unscrew the hexagon nut (arrow), lift the battery support up slightly and swing it inward together with the battery
3 Pull the knob with the fuel pump symbol.

CarManuals2.com

Manual operation

1 Remove the interior lamp (refer to page 171). Reach into the opening and push out the panel
2 Using the Allen wrench from the on-board tool kit (refer to page 166), turn the sliding/tilt sunroof in the desired direction.

Jump-starting

Never use spray starter fluids to start the engine.

If the battery is discharged, you can use two jumper cables to start your car with power from the battery of a second vehicle. Always use jumper cables with fully insulated handles on the terminal clamps.

Do not touch high-voltage wiring and cables on a running engine. There is a risk of fatal injury if you do this.◀

Carefully comply with the following instructions to avoid personal injury and damage to one or both vehicles:

1 Ensure that the battery on the support vehicle is also rated at 12 volts, and that the capacities of the two batteries (Ah) are roughly comparable (printed on casing)
2 Leave your battery connected to the car electrical system
3 Make sure that there is no contact between the bodywork of the two vehicles – short circuit risk

4 Start by connecting the jumper cable from the positive terminal of the support vehicle to the positive terminal connector located in your BMW's engine compartment. The cover of the auxiliary terminal for jump starting is marked with "Batt. +" (refer to the illustration). Open the cover by pulling the tab. The illustration shows the auxiliary terminal for jump starting the BMW 740i/L as an example. For the BMW 750iL: Refer to "Engine compartment" on page 146

5 Then connect the negative terminals. Attach the cable to either the support vehicle's negative battery terminal, or to a suitable ground on its engine or bodywork. Then connect the other end of the cable to ground on the vehicle's engine or bodywork which is to be started. Then connect the other end of the cable to a ground on your vehicle's engine or bodywork (for instance, the nuts on the strut dome. Refer to the arrows in the illustration above)

Follow the same sequence for connecting the jumper cables if you assist in jump-starting another vehicle. If you do not, there is a risk of injury caused by spark generation at the battery.◀

CarManuals2.com

6 Start the engine of the support vehicle and let it run
7 Start the engine on the vehicle needing the jump-start, and allow it to run as usual. If the first start attempt is not successful, wait a few minutes before another attempt in order to allow the discharged battery to recharge
8 Before disconnecting the jumper cables from your BMW, turn on the rear window defroster and set the blower to the highest speed; allow the engine to run approx. 10 seconds. This will prevent a voltage surge from the voltage regulator to the electrical accessories
9 Then disconnect the jumper cables in reverse sequence.

Have the battery recharged if necessary.

Towing the vehicle

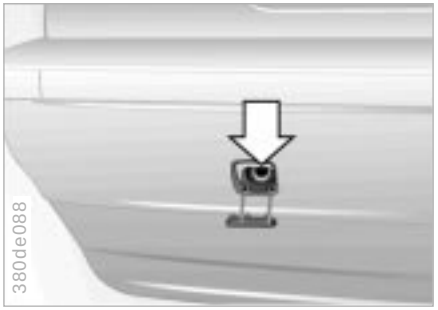

Tow fitting

The screw-in tow fitting is stored in the onboard tool kit; be sure that it remains in the vehicle at all times. This fitting is designed for installation in the tow sockets located at the front and rear of the vehicle, and is intended for towing on paved road surfaces only.
It should not be used to pull a vehicle out of deep snow, mud, sand, etc.
Always observe all applicable towing laws and regulations.

Access to tow sockets

Front:
Apply pressure to the arrow symbol on the cover panel to remove.

CarManuals2.com

Rear:
Apply pressure to the arrow symbol on the cover panel to remove.

⚠ Screw the tow fitting in until it bottoms firmly. If this is not done, the threads could be damaged.
Never attach tie-down hooks, chains, straps, or tow hooks to tie rods, control arms, or any other part of the vehicle suspension as severe damage to these components will occur, leading to possible accidents.◀

Use only a nylon towing strap to tow the vehicle, since the inherent resilience of this material helps protect both vehicles from sudden jerking movements.

Online Edition for Part No. 01 41 0 004 597 - © 08/99 BMW AG

The towed vehicle should always be the lighter of the two vehicles. If this is not the case, it is no longer possible to control vehicle response.◀

Tow-starting

It is not possible to start the engine of vehicles equipped with automatic transmission by towing or pushing.

For instructions on jump starting, refer to page 183.

Never attempt to use your vehicle to push another car, as damage to the energy-absorbing bumpers could result.

Towing a vehicle

Carmanuals2.com

1 Place the selector lever in position N
2 Towing speed:
  Max. 45 mph (70 km/h)
3 Towing distance:
  Max. 95 miles (150 km)
4 Leave the ignition key at position 1 to ensure that the brake lamps, turn signals, horn and windshield wipers remain operative, and to prevent the steering lock detent from engaging
5 Switch on the hazard-warning system (observe country-specific regulations).

Find some means of identifying the vehicle in tow, for instance, place a sign or warning triangle in the rear window.

To prevent the steering lock from engaging, make sure that the ignition key remains in position 1, even if the electrical system has failed.
The steering and brakes are without power assist when the engine is off. This means that increased effort is required for steering and braking.◀

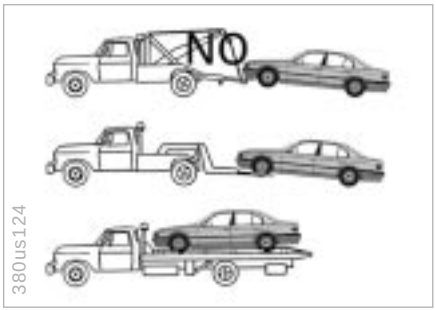

Towing with a commercial tow truck

▷ Do not tow with sling-type equipment
▷ Use a wheel lift or flat bed equipment
▷ Please comply with applicable towing laws.

Never allow passengers to ride in a towed vehicle for any reason.◀

CarManuals2.com

Online Edition for Part No. 01 41 0 004 597 - © 08/99 BMW AG

Airbags 188
Adaptive Transmission Control (ATC) 188
Automatic Stability Control plus Traction (ASC+T)/Dynamic Stability Control (DSC) 189
Radio reception 190
BMW active seat 190
Safety belt tensioner 191
DSP sound system 191
Rearview mirror with automatic dimmer 192
Rain sensor 192
Tire Pressure Control (RDC) 193
Xenon lamps 194

CarManuals2.com

Airbags

Deceleration sensors continuously monitor the physical forces acting upon the vehicle. In a severe frontal collision, the gas generators of the driver's airbag and the front passenger airbag are ignited. However, the passenger-side airbag is only triggered if an additional sensor has recognized that the passenger seat is occupied.

In the event of a severe side impact, the head protection and side airbags in the front and/or rear* are triggered.

The airbags located under the marked covers inflate and unfold in a matter of a few milliseconds. In this process, they tear through the designed separation points of the upholstered covers or press them out.

Because the inflation process must be virtually instantaneous, it is necessarily accompanied by a certain amount of ignition and inflation noise. The gas required to inflate the airbags is not dangerous, and the smoke caused by it rapidly dissipates.

The entire process is completed within fractions of a second.

CarManuals2.com

ATC

On vehicles with automatic transmission Adaptive Transmission Control (ATC) uses a number of factors to calculate the maximally efficient gear. In this process it monitors your personal driving style, the situation in which you are driving, the condition of the road and the traffic conditions.

ATC recognizes your personal driving style from the positions and movements of the gas pedal, declaration when braking and lateral acceleration through curves. Four shift characteristics – from comfort-oriented to performance-oriented – are available for selection by ATC.

In order to take driving conditions into account, ATC registers corners and both uphill and downhill gradients. For example, if you maintain speed through a curve, the transmission does not upshift.
On uphill gradients, it shifts only when the engine speed increases in order to make more efficient use of power reserves. On downhill gradients, ATC shifts down when the speed of the vehicles increases, causing the driver to step on the brakes.

With respect to road conditions, ATC monitors the friction between the tires and the road. The system responds to slippery road surfaces (snow and ice) by activating the winter program. Second gear is used when moving away from a standstill, upshifts occur sooner. On descents, downshifting does not occur in spite of the application of brakes. This enables you to "feel" the road as you drive and produces greater dynamic stability. If the friction between the tires and the road is adequate, the normal system is again activated. The system also leaves the winter program when you shift from drive position "D" to "S," "3" or "2," or if the ASC+T/DSC* is deactivated.

By recognizing traffic conditions, ATC can retain maximum driving comfort. For instance, the system recognizes stop-and-go traffic and then proceeds only in second gear until it encounters higher starting loads.

Of course, the selector lever can still be used to select specific gear ratios. Performance-oriented driving is enabled by shifting from drive position "D" to "S," "3" or "2." Positions "3" and "2" each limit upshifts to the next gear. Position "2" is best for driving on steep mountain slopes with a heavy load.

CarManuals2.com

Precision sensors monitor the wheel speeds. The DSC also monitors steering angle, lateral acceleration, brake pressure and the movement of the vehicle around its vertical axis.

If differences in wheel speeds occur, the system recognizes the danger of wheelspin and reduces the engine's drive torque. If necessary, the system also responds with additional braking intervention at all four wheels.

In addition, DSC permanently monitors the vehicle's current operating condition and compares it with an ideal condition that is calculated from the sensor signals. If discrepancies from this ideal condition (understeering or oversteering, for example) occur, DSC stabilizes the vehicle in fractions of a second by reducing engine power output and with the assistance of braking intervention at individual wheels. Dangerous skids are thus prevented from the very beginning.

You may need some time to become accustomed to this system intervention. However, it helps provide optimum propulsive force and driving stability.

The braking intervention may be accompanied by a certain degree of noise.

Radio reception

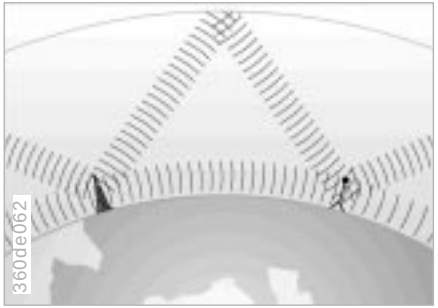

Radio waves – mediumwave, longwave and shortwave – offer a wide range of reception, because the broadcast signals travel not only along the ground as surface waves, but also as waves bounced back to earth from the ionosphere.
Frequency-modulation (FM) provides substantially better sound quality than AM. However, because FM transmissions rely on line-of-sight broadcast waves, their effective reception range is limited.

CarManuals2.com

Although numerous factors combine to impose inherent limitations on the reception quality available from mobile radios, specially designed systems can be employed to minimize their effects:

With radio stations which broadcast over multiple frequencies, the "Radio Data System" (RDS) ensures that the frequency with the best reception quality will automatically be selected.

The Diversity Antenna system employs several FM antennas integrated within the rear window to provide three separate sources for receiving broadcast waves. An integral processor automatically selects the antenna with the best FM reception quality at any given time. Because the ongoing antenna selection process is completed within milliseconds, it remains inaudible to the radio listener.

BMW active seat*

The active seat is an advanced development in BMW seats. These seats are engineered with orthopedic considerations so that you will be less fatigued during longer trips and sitting for long periods without moving. The seat is no longer a passive link between the road, the running gear, and the driver. Instead, by means of an active modification to the seat's surface, the seat causes weight transfers which are slight and imperceptible. The basic seating position is not changed by this. In the seat's upholstery, beneath the surface of the seat, there is a cushion of fluid on the left and right. The fluid is slowly circulated back and forth between the cushions by means of a pump.

Online Edition for Part No. 01 41 0 004 597 - © 08/99 BMW AG

BMW active seat*

This causes a movement of the spinal column which is barely detectable, together with an improvement in the flow of blood to the intervertebral disks and the muscle structure in the area of the spinal column.
The passengers can experience less muscle cramping, back pain in the lumbar region or symptoms of fatigue. As a result, the active seat represents a significant contribution to driving comfort and driving safety.

Safety belt tensioner

The safety belt tensioner responds to severe collisions by tightening the belts to ensure that occupants remain firmly positioned in their seats. A gas-pressure system retracts the buckle assembly to tension the shoulder and lap belts within fractions of a second. This reduces the tendency to slide under the lap belt.

CarManuals2.com

DSP sound system*

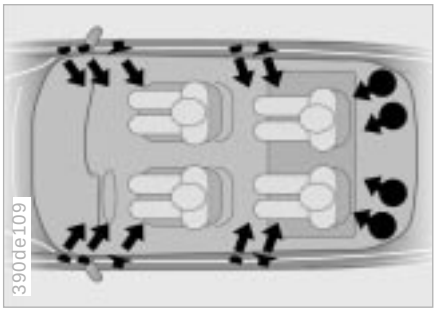

The DSP Professional premium sound system features a special amplifier combined with Digital Sound Processing (DSP) and integrated speakers to surround you with crisp, true-to-life sound reproduction.
The speaker system's subwoofers, woofers, midrange speakers and tweeters furnish you with an impressively full-bodied listening experience. The individual components are oriented so as to produce the aural sensation that you would experience facing the stage in a concert hall. The system also automatically adjusts the bass and treble settings to compensate for changes in volume and vehicle speed.

Rearview mirror with automatic dimmer

The interior rearview mirror with automatic dimming feature reduces glare from following traffic by adapting the intensity of the reflected images to correspond to levels of light registered by the unit's sensors. The mirror reverts to its undimmed setting as soon as the light source disappears. One of these sensors is mounted on the front of the mirror housing and is designed to monitor light levels in the area forward of the vehicle. The second sensor is integrated within the mirror's glass. The electronic control system operates by comparing the respective levels of luminous intensity in front of and behind the car. The difference provides the basic parameter used to modulate an electrical current and induce chemical changes in a semisolid layer incorporated in the lens.

The semisolid reacts chemically to this electrical current, thus providing infinitely-variable dimming of the mirror (electrochromic technology).

CarManuals2.com

As a result, it is no longer necessary to dim the mirror manually, and the driver can maintain full concentration on traffic.

Rain sensor*

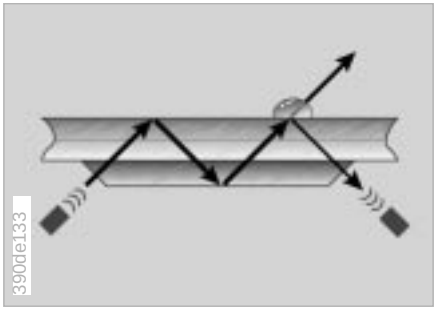

The rain sensor controls windshield wiper operation, depending on how wet the windshield is.

Infrared light is carried along the surface of the windshield in an optical conductor in such a manner that it is reflected completely when the windshield is dry. The quantity of reflected light is measured.

If there is moisture on the glass, the amount of light reflected is reduced since the infrared light at the surface of the windshield can escape. The quantity of reflected light is thus a means of gauging the degree of wetness on the windshield.

Rain sensor*

When the system is set to the "Intermittent" wiper speed, the wipers react immediately – if water is splashed onto the windshield by vehicles traveling ahead of you, for example. As a result, the rain sensor provides a contribution to driving safety and comfort.

Tire Pressure Control (RDC)*

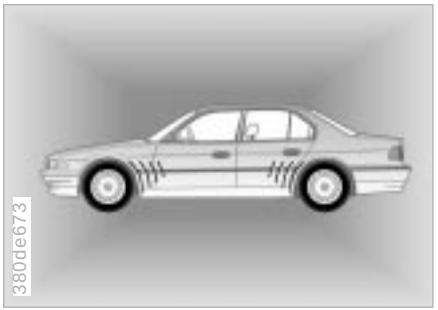

The Tire Pressure Control system assumes the task of regular tire pressure checks for you. Tire pressures are monitored at all four wheels, even when the vehicle is moving.

CarManuals2.com

Behind the valve stem in every wheel, there is an electronic chip which is designed for severe-duty applications and long service life. It contains a pressure sensor, a transmitter and a battery. The pressure is measured in extremely short time intervals and then transmitted by a radio signal. If an irregularity is detected, the transmission rate is increased.

Near every wheel is an antenna in the body that receives the signal from the wheel. A central electronics system evaluates the quadruple signals and forwards any changes.

The RDC provides an important contribution to driving safety.

Xenon lamps*

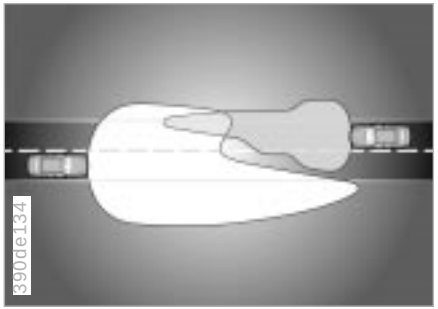

The xenon lamps light up the side and front areas of the vehicle with significantly more brightness and uniformity than the traditional halogen lamp.

In a xenon lamp, an electric arc replaces the filament in order to generate intense illumination. A gas mixture in a quartz glass tube with metal vapor is ignited by a high electric voltage. The arc that is generated is then sustained by a lower voltage. When the lamp is turned on there is a brief warm-up period. Maximum brightness is attained in approx. 15 seconds.

Xenon lamps provide significantly-improved visibility, especially during adverse weather conditions and driving situations (driving at night in heavy rain or through road repair areas where there are no lane markers, for instance).

CarManuals2.com

Vehicles with xenon lamps are equipped with automatic-dynamic headlamp range control. As a result, the highway is always optimally lighted, regardless of load conditions, and drivers in oncoming traffic are not blinded.

Xenon lamps make a significant contribution to highway safety since other highway users, bicyclists and motorcyclists in the right lane, and pedestrians are more easily detected.

Online Edition for Part No. 01 41 0 004 597 - © 08/99 BMW AG

CarManuals2.com

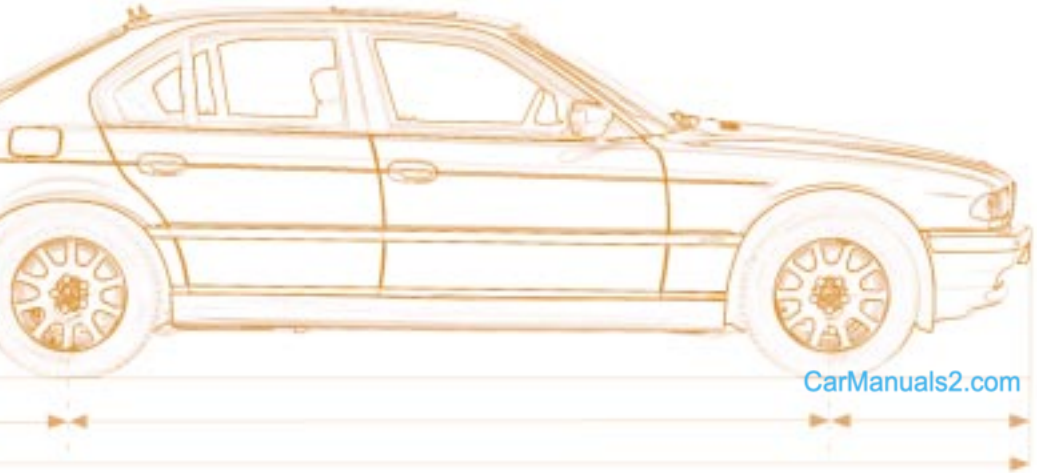

Online Edition for Part No. 01 41 0 004 597 - © 08/99 BMW AG

Engine specifications 198
Dimensions 199
Weights 200
Capacities 201
Electrical system 202
Drive belts 202

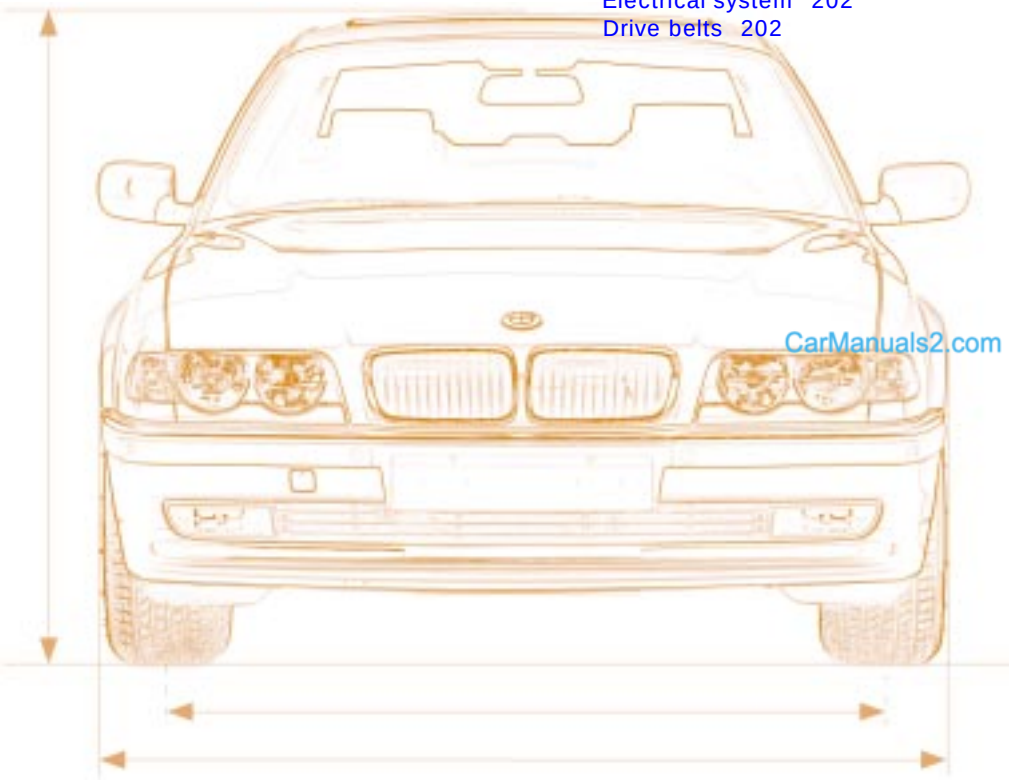

CarManuals2.com

Engine specifications

		BMW 740i/L	BMW 750iL
Displacement	cu in (cm³)	268.4 (4,398)	328.2 (5,379)
Number of cylinders		8	12
Max. output	hp	282	322
at engine speed	rpm	5,400	5,000
Maximum torque	ft-lb (Nm)	324 (439)	361 (490)
at engine speed	rpm	3,700	3,900
Compression ratio	ε	10.0	10.0
Stroke/bore	in (mm)	3.26/3.62 (82.7/92.0)	3.11/3.35 (79.0/85.0)
Fuel-injection system		Digital-electronic engine-management system	

CarManuals2.com

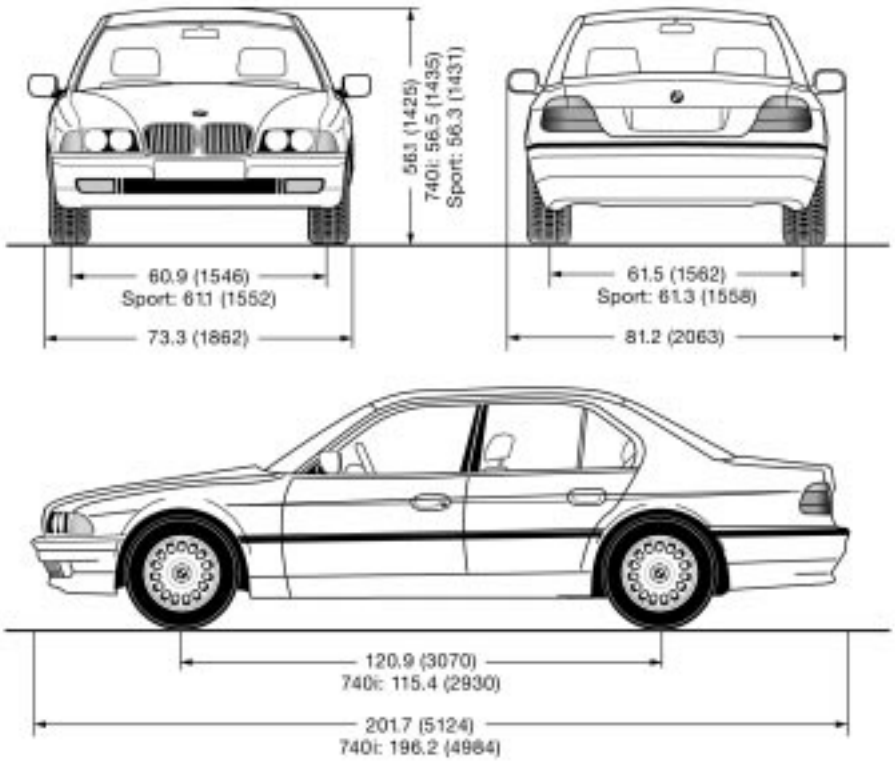

380us701

All dimensions are given in inches (mm).
Min. turning circle dia.: BMW 740iL/750iL 40.0 ft (12.2 m), BMW 740i 38.1 ft (11.6 m).

CarManuals2.com

Weights

		BMW 740i	BMW 740iL	BMW 750iL
Curb weight (with driver, ready for operation, full tank of fuel, options not included)				
	lbs (kg)	4,255 (1,930)	4,288 (1,945)	4,597 (2,085)
Approved gross vehicle weight	lbs (kg)	5,313 (2,410)	5,346 (2,425)	5,655 (2,565)
Approved front axle weight	lbs (kg)	2,590 (1,175)	2,601 (1,180)	2,646 (1,200)
Approved rear axle weight	lbs (kg)	2,910 (1,320)	2,932 (1,330)	3,086 (1,400)
Maximum load capacity	lbs (kg)	1,058 (480)	1,058 (480)	1,058 (480)
Approved roof load capacity	lbs (kg)	220 (100)	220 (100)	220 (100)
Never exceed either the approved axle weights or the gross vehicle weight.				
Luggage compartment capacity	cu ft (liters)	17.7 (500)	17.7 (500)	17.7 (500)

CarManuals2.com

					Notes
Fuel tank	gal. (liters)	approx. 22.5	(approx. 85)	– BMW 740i/L	Fuel specification: Refer to page 27
		approx. 25.1	(approx. 95)	– BMW 750iL	
reserve	gal. (liters)	approx. 2.6	(approx. 10.0)	– BMW 740i/L	
		approx. 3.2	(approx. 12.0)	– BMW 750iL	
Windshield washer system,	quarts (liters)	approx. 4.7	approx. 4.5)		For details: Refer to page 148
with headlamp washer system	quarts (liters)	approx. 6.5	(approx. 6.0)		
Cooling system including heater circuit	quarts (liters)	12.7 (12.0)			For details: Refer to page 151
Engine oil and filter change	quarts (liters)	7.9 (7.5)		– BMW 740i/L	Synthetic Oil for gasoline engines, oil specifications: Refer to page 150
		8.5 (8.0)		– BMW 750iL	
Automatic transmission/ Differential	–				Lifetime fluid, no fluid change required

CarManuals2.com

Battery

BMW 740i/L: 12 V, 110 Ah

BMW 750iL: 12 V, 55 Ah
12 V, 110 Ah

Spark plugs

NGK BKR 6 EQUP or

Bosch FGR 7 DQP
(not released at this time)

This spark ignition system meets all requirements of the Canadian Interference-Causing Equipment Regulations (ICES-2).

Drive belts

BMW 740i/L

Water pump – AC generator – power steering
V-belt 7 K x 1635

A/C compressor
V-belt 5 K x 1004

BMW 750iL

AC generator – power steering
V-belt 7 K x 1045

Coolant pump – air conditioner compressor
V-belt 6 K x 1190

▷ You can obtain Original BMW Parts and Accessories, as well as professional advice from your BMW center.◀

CarManuals2.com

Online Edition for Part No. 01 41 0 004 597 - © 08/99 BMW AG

CarManuals2.com

CarManuals2.com

Online Edition for Part No. 01 41 0 004 597 - © 08/99 BMW AG

Everything from A to Z 206
Owner service procedures 212

Overview

Controls and features

Operation, care and maintenance

Owner service procedures

Advanced technology

Technical Data

Index

CarManuals2.com

Everything from A to Z

A
ABS 129
Accessories 6
Activated-charcoal filter 109
Active seat 50
Adaptive Transmission Control (ATC) 67, 69, 188
Add
engine oil 149
washer fluid 148
Adjust
backrest 48
steering wheel 51
thigh support 50
Air distribution 106
Air flow 107
Air jets 104
Air outlets, ventilation 104
Air pressure 136
Airbags 21, 57, 161, 188
Alarm system, deactivating in an emergency 43
Antenna 190
Antifreeze, radiator 132, 152
Antilock Brake System (ABS) 129
Antitheft alarm system 42
Antitheft system 34
Approved gross vehicle weight 200
Aquaplaning 127, 136
Armrest 115
ASC+T (Automatic Stability Control plus Traction) 96, 97
Ashtray 118
AUC (Automatic recirculated-air control) 107
Audio System 82
Automatic car washes 155
Automatic climate control 104
removing window condensation 106
Automatic cruise control 74
Automatic curb monitor 54
Automatic recirculated-air control (AUC) 107
Automatic Soft-Close feature 40
Automatic Stability Control plus Traction (ASC+T) 96, 97
Automatic steering wheel adjustment 51
Automatic transmission 66
Automatic transmission with Steptronic 69
Automatic windshield washer 73
Average fuel consumption 89
Average speed 90
Axle loads 200

B
Backup lamps, bulb replacement 170
Battery 176, 202
capacity 202
charge 178
charge current 20
discharged 183
removal and installation 179
Belts 56
Beverage holders 117
Blower 107
BMW active seat 50
BMW comfort seat 49
BMW High-Performance Synthetic Oil 150
BMW sports seat 49
BMW Universal Transmitter 112
Body-cavity protectant 156
Brakes 130
faults 132
fluid 152
hydraulic system 20
lamps, bulb replacement 170
Break-in procedure 126
Break-resistant security glass, care 158
Bulb replacement 167

C
Capacities 201
Car jack 173
Car keys 32
Car Memory 55
Car radio reception 135, 190
Car telephone 117
Car wash 155
Care, exterior 157
Care, interior 159
Caring for the vehicle finish 157
Catalytic converter 128
Cellular phone 135
voice control 23
Cellular phone, please refer to the separate Owner's Manual
Center (high-mount) brake lamp 171
Center armrests 116
Central locking system 34, 35
button 38
Changing a wheel 173
Charge indicator lamp 20

CarManuals2.com

Charging the battery 178
CHECK button 79
Check Control 79
Checking the engine oil 149
Checking tire pressure 28
Child restraint
systems 56, 60
Child seat
installation 61, 62
security 61
Childproof door locks 62
Cigarette lighter 119
Clock, refer to Digital clock 83
Cockpit 16
Code 92
Refer to the Radio Owner's Manual
Codes, tires 139
Coin tray 117
Cold start 64
Comfort seat 49
Compartments 117
Computer 88
Configuring personalized settings 51, 52, 54
Connecting a vacuum cleaner 119
Consumption display 77
Contour seat 50
Convenience operating mode for windows and sliding/tilt roof 34
Convenience starting 64
Coolant 132, 151
Coolant temperature gauge 78
Coolant, antifreeze 132
Cruise control 74
Cruising range 89
Curb weight 200

D

Dash lighting 100
Dashboard 16
Date 83
Daytime-running lamp 100
DBC (Dynamic Brake Control) 131
Deep water 127
Defrosting, windows 106
Digital clock 83
Digital Sound Processing (DSP) 191
Digital sound processor 191
Dimensions 199
Dimming feature, interior rearview mirror 52
Dipstick, engine oil 149
Disc brakes 130
Disconnect the battery 179
Displacement 198
Display lighting 100
Displays 18
Distance 90
Distance warning 94
Door key 32
Door warning lamps, bulb replacement 172
Doors
emergency release 34
manual operation 34
remote control 36
unlocking and locking 38
Doors, radio remote control 36
DOT Quality Grades 137
Drink holders 117
Drive belts 202
Driving notes 127
Driving through water 127
DSC (Dynamic Stability Control) 96
DSP amplifier, please refer to the seperate Radio Owner's Manual
Dynamic Brake Control (DBC) 131
Dynamic Stability Control (DSC) 96

E

EDC (Electronic Damper Control) 97
Electric power windows 44
Electric rear seat adjustment 51
Electric steering wheel adjustment 51
Electrical accessories, failure 180
Electrical malfunction
fuel filler door 182
sliding/tilt sunroof 182
Electrical system 202
Electronic Damper Control (EDC) 97
Electronic immobilizer 33
Emergency deactivation of the alarm system 43
Emergency release
doors 34
fuel filler door 182
luggage compartment lid 39
sliding/tilt sunroof 182
Energy Control 77
Engine
compartment 144
coolant 151
data 198
oil consumption 149
oil pressure 20
oil specifications 150
performance 198

CarManuals2.com

Everything from A to Z

Estimated time of arrival 91
Exterior door handles, lighted 36
Exterior finish, care 156

F

Failure messages 79
False alarms, avoiding 43
First-aid kit 25
Fittings for tow-starting and towing 184
Flashlight 115
Flat tires 136
Flooding 127
Fog lamps 101
  bulb replacement 170
  switch 101
Footwell lamps 102
  bulb replacement 172
Front armrest 116
Front seat adjustment 48
Fuel 27
  average fuel consumption 89
  consumption indicator 77
  gauge 77
  specifications 27
  tank capacity 201
Fuel filler door 26
  manual release after electrical fault 182
Fuses 180

G

Gasoline 27
Glove compartment 115
  bulb replacement 172
Gross vehicle weight 200

H

Hand brake, refer to Parking brake 21, 65
Handsfree system 117
Hazard warning triangle 25
Headlamp
  adjusting 168
  care 168
  flasher 71
  washer system 73, 148
Heated seats 110
Heated steering wheel 110
Heating and ventilation 104
Heating during a stop 108
Height 199
Height adjustment
  head restraints 48, 51
  seats 48
  steering wheel 51
HiFi system 191
High beams 71
  bulb replacement 168
Hood release 143
Horn 23, 24
Hydraulic brake system 132

I

Ice warning 76
Ignition key 32
Ignition switch 63
Independent ventilation system 111
Independent ventilation system, please refer to the separate Owner's Manual of the onboard computer
Indicator lamps 20
Inflation pressures 28, 136
  monitoring 98, 193
INSPECTION 78
Instrument cluster 18
Instrument panel
  lighting 100
Interaxle tire rotation 138
Interface socket, onboard diagnosis system (OBD) 163
Interference
  cellular phone 135
  radio 135
Interior door handles, lighted 38, 100
Interior lamps 34, 102
  bulb replacement 171
  remote control 36
Interior motion sensor 42
Interior rearview mirror, automatic dimming 52
Interlock 63
Intermittent wipe switch 72

J

Jump starting 183

K

Key Memory 55
Keys 32
Keys with remote control 32
Kickdown 70
Knock sensors 27

L

Lashing eyes 41, 122
Leather care 159
Length 199
Level control system 134
License plate lamps, bulb replacement 171
Light switch 100
Light-alloy wheels 142
Lighted exterior door handles 34, 36
Lighted interior door handles 38, 100
LIGHTS ON warning 100
Limit 91
Loading 122
Load-securing devices 122
Locking and unlocking the doors 34
Locks, care 132
Low beams 100
  bulb replacement 168

CarManuals2.com

Low-fuel warning lamp 77
Lug bolts 174
Lug wrench 174
Luggage
compartment 39, 41
Automatic Soft-Close 40
bulb replacement 172
capacity 200
emergency release 39
features 39
locking separately 39
manual operation 39
nets 41
opening from the inside 40
opening separately 39
remote control 37
Luggage compartment lid 39
manual operation 39
opening separately 39
remote control 37
Luggage rack 122
Luggage straps 41
Lumbar support 49

M

M+S tires 140
Magic Eye, refer to battery charge condition 178
Maintenance 78, 154
Malfunction displays 79
Manual operation
doors 34
fuel filler door 182
luggage compartment 39
sliding/tilt sunroof 182
Manually controlled recirculated-air 107
Master key 32
Memory 53, 55
MFL (Multifunction steering wheel) 23
Microfilter 109
MID (Multi-Information Display) 82
Mirrors 52
defrosting 52
memory 53
Mobile phones 135
Mobile phones, please refer to the separate Owner's Manual
Modifications, technical 6, 162
Multifunction armrest 116
Multifunction steering wheel (MFL) 23
Multi-Information Display (MID) 82

N

Nozzles 104

O

OBD connector 163
Odometer 76
Oil
adding 149
additives 149
consumption 149
level check 149
pressure, indicator lamp 20
specifications 150
Oil change interval, please refer to the Service Warranty Information Booklet
OILSERVICE 78
Onboard computer 88
Onboard computer, please refer to the separate Owner's Manual
Onboard tool kit 166
Opening and closing
from the inside 38
from the outside 34
Outside mirrors 52
Outside temperature display 76

P

Paint blemishes, exterior dirt 157
Park Distance Control (PDC) 94
Parking aid 94
Parking brake 21, 65
Parking in winter 134
Parking lamps 101
Passenger side exterior mirror tilt function 54
PDC (Park Distance Control) 94
Playing cassettes, refer to the Radio Owner's Manual
Playing CDs, please refer to the Radio Owner's Manual
Pocket lamp 115
Pollen from the incoming air 109
Power seat 48
adjustment 48
Power steering 134
Power windows 44
safety switch 45
Pressure monitoring, tires 98, 193
Pressure, tires 28, 136
Pushbutton for central locking system 38

R

Radio
Car radio, please refer to the separate Owner's Manual
Radio Data System (RDS) 190

CarManuals2.com

Radio reception 135, 190
Rain sensor 72, 155, 192
RDC (Tire Pressure Control) 98, 193
RDS (Radio Data System) 190
Reading lamps 102
Rear footrests 119
Rear passenger-area air conditioning 109
Rear seat adjustment, electric 51
Rear seat control 116
Rear seat heating 110
Rear window blind 111
Rear window defroster 74, 105, 107
Rearview mirrors 52
Refueling 26
Remote control 35
Remote control for onboard computer 93
Removing condensation, windows 106
Replacement keys 32
Replacing tires 137
Reservoir, washer system 145, 148
Residual heat 108
Roller sun blinds 111
Roof luggage rack 122
Roof weight rating 200
Roof-mounted luggage rack 122
Rubber seals and components 159

S

Safety belt tensioner 191
Safety belts 56
Safety lock buttons 38
Screw-on valve stem caps 140
Seat adjustment 48
Seat heating 110
Seat memory 53
Seat, power 48
Securing loads 122
Security glass 45
Selector lever, automatic transmission 66, 69
Service and Warranty Information Booklet 152, 154
Service Interval Display 78, 154
Servotronic 134
Shift-lock 66, 69
Shoulder support 49
Shutting off the engine 65
Side airbags 57, 58
Side impact head protection system 57
Side marker lamps, bulb replacement 169
Ski bag 120
Skid control 134
Sliding/Tilt sunroof 46, 47
closing after electrical fault 182
convenience operation 34
radio remote control 36
Sliding/Tilt sunroof with glass moonroof 47
Slippery roads 133
Snow chains 133, 141
Socket 119
Sound system 191
Spare key 32
Spare tire 174
Spark plugs 202
Speaker 117
Special oils 150
Speed limit warning 91
Speedometer 19
Sports seat 49
Starting assistance 183
Starting problems 64, 128, 183
Starting the engine 64
Steering 134
Steering lock 63
Steering wheel adjustment, automatic 51
Steering wheel lock 63
Steering wheel memory 53
Steering wheel, heated 110
Steptronic 69
Stopping the vehicle 65
Storage facilities 117
Storing the vehicle 161
Summer tires 139, 142
Sun blinds 111
Sun visors 53
Symbols 4, 177

T

Tachometer 76
Tail lamps 170
bulb replacement 170
Tank capacity 201
Technical modifications 6, 162
Telephone hookup 117
Telephone, please refer to the separate Owner's Manual
Temperature adjustment 107
Temperature display
engine coolant 78
outside temperature 76
Third brake lamp 171
Tilt function, passenger side mirror 54
Tilt sensor alarm system 36, 43

CarManuals2.com

Tire
code 139
damage 136
failure 173
inflation
pressure 28, 136
replacement 137
specifications 142
tread 136
Tire Pressure Control (RDC) 98, 193
Tools 166
Topping up the windshield/ washer fluid reservoir 148
Torque 198
Tow fittings 184
Towing the vehicle 184
Tow-starting 184
Track circle 199
Transmission 66, 69
Tread depth, tires 136
Trip odometer 76
Trunk lid, refer to luggage compartment lid 39
Turn signal 22, 71
bulb replacement 169
Turn signals
bulb replacement 170
Turning circle 199

U
Uniform Tire Quality Grading 138
Unintentional alarms, avoiding 43
Universal Transmitter 112
Used batteries 178

V
Vanity mirrors 53
Vehicle battery 176, 202
Vehicle care
exterior 157
interior 159
Vehicle Identification Number 153
Vehicle storage 161
Ventilation 104, 111
air flow 104
draft-free 108
tips for pleasant driving 106
Ventilation system while parked, please refer to the separate Owner's Manual of the onboard computer
Vinyl care 159
Viscosity 150
Voice control 23, 24

W
Warning lamps 20
Warnings 79
Warranty and Service Guide Booklet 152, 154
Washer reservoir, filling 148
Washer system 72
Washing your car 155
Water on the roads 127
Waxing, finish 157
Weights 200
Wheel lug wrench 174
Wheel rims 139
Wheelbase 199
Wheels and tires 139, 142
Wheelslip control, refer to ASC+T/DSC 96
Width 199
Windows
convenience operating mode 34
demisting 106
radio remote control 36
Windshield washer nozzle adjustment 148
Windshield washer system 72
Windshield wipers 72
replacing blades 166
Windshield, defrosting 73
Winter operation 132
Winter tires 140
Wipers 72
replacing blades 166
Work in the engine compartment 143

X
Xenon lamps 168, 194

CarManuals2.com

Owner service procedures

A
Adding
brake fluid 152
engine coolant 151
engine oil 149
washer fluids 148
Air pressure 28

B
Backup lamps, bulb replacement 170
Battery
checking charge condition 178
discharged 183
Brake lamps, bulb replacement 170
Brakes, faults 132
Bulb replacement 167

C
Changing a wheel 173
Charging the battery 178
Check Control 79
Checking
charge condition of the battery 178
engine oil 149
tire pressure 28

D
Deactivating the interior motion sensor 36
Deactivating the tilt sensor alarm system 36
Defrosting, windows 106
Difficult steering 134
Doors, manual operation 34

E
Electrical accessories, failure 180
Electrical fault
fuel filler door 182
sliding/tilt sunroof 182
Emergency release
doors 34
fuel filler door 182
luggage compartment lid 39
sliding/tilt sunroof 182
Engine oil specifications 150

F
Failure messages 79
Filling the windshield washer fluid reservoir 148
First-aid kit 25
Fittings, tow-starting and towing 184
Fog lamp, bulb replacement 170
Footwell lamps, bulb replacement 172
Fuel filler door, manual release after electrical fault 182
Fuses, replacing 180

G
Glove compartment lamp, bulb replacement 172

H
Hazard warning flashers 25
Hazard warning triangle 25
Headlamp, care 168
High beam headlamps, bulb replacement 168, 170
Hood release 143

I
Indicator lamps 20
Interior lamps, bulb replacement 171
Interior motion sensor, deactivation 43

J
Jump starting 183

L
Level control system, inactive 134
License plate lamps, bulb replacement 171
Low beam headlamps, bulb replacement 168
Lug wrench 174
Luggage compartment lamps, bulb replacement 172
Luggage compartment lid, emergency release 39
Luggage compartment release 143

M
Maintenance 78, 154
Malfunction displays 79

O
Oil level check 149
Oil specifications 150
Onboard tool kit 166

P
Pressure, tires 28

R
Rear lamp assembly 170
Releasing the hood 143

CarManuals2.com

Removing condensation, windows 106
Replacement keys 32

S
Security glass, care 158
Sliding/tilt sunroof, closing after electrical fault 182
Sliding/tilt sunroof, power supply interruption 47
Snow chains 141
Spare key 32
Spare tire 174
Starting assistance 183
Starting problems 64, 128, 183

T
Tail lamps, bulb replacement 170
Tail lamps, bulb replacement 170
Tilt sensor alarm system, deactivation 43
Tire damage 136
Tire failure 173
Tire inflation pressure 28, 136
Tools 166
Tow fittings 184
Towing the vehicle 184
Turn signal, bulb replacement 169

U
Use of antifreeze, radiator 151

W
Warning lamps 20
Warnings 79
Washer fluid reservoir, filling 148
Wheel change 173
Windows, demisting 106
Windshield washer nozzle adjustment 148
Wiper blades, replacing 166
Work in the engine compartment 143

CarManuals2.com

Refueling

So that you will have important specifications available when you stop to refuel, we recommend that you supplement this table with data that apply to your vehicle.

Fuel

Designation	
AKI: minimum	
AKI: for rated performance	
AKI: for enhanced performance	

Engine oil

Quality	

The oil volume between the two marks on the dipstick corresponds to approx. 1.1 US quarts (1 liter).

CarManuals2.com

Tire inflation pressures		Summer		Winter	
		Front	Rear	Front	Rear
4 persons					
5 persons or 4 plus luggage					

CarManuals2.com

01 41 0 004 597 US En

We wish you an enjoyable driving experience.

The Ultimate Driving Machine

Online Edition for Part No. 01 41 0 004 597 - © 08/99 BMW AG