62 11 280 Removing and installing/replacing instrument panel

Important!

Comply with notes on protection against electrostatic damage (ESD protection).

Necessary preliminary tasks:

- Clamp off battery lead from negative connection point
- Move steering column completely rearwards
- If necessary, tape off cover to protect against damage

Version with instrument panel in leather:

During installation and removal tool combinations can damage the leather of the instrument panel.

In order to prevent damage, yellow plastic adhesive tape (1) must be stuck on the left and right sides of the instrument panel.

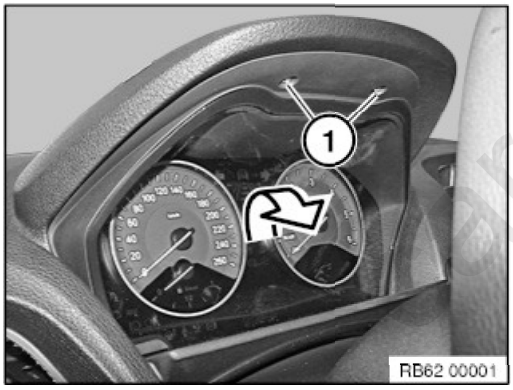

Release screws (1).

Tightening torque 62 11 1AZ.

Pry out instrument panel in direction of arrow.

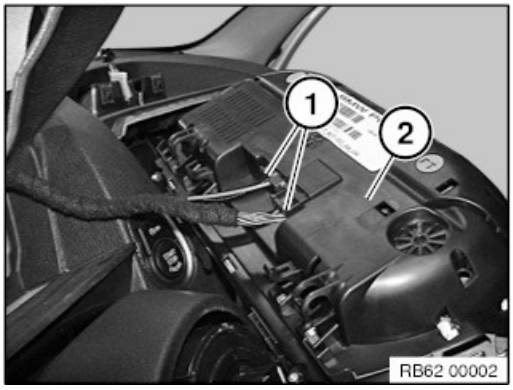

Detach plug connection (1) and remove instrument panel (2).

cardiagn.com

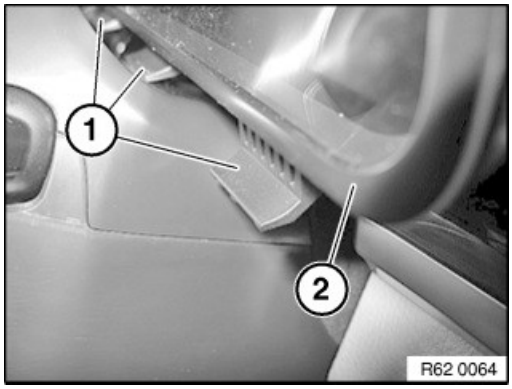

Installation note:
Retaining tabs (1) of dashboard (2) must be exactly seated in mountings of dashboard.

Replacement:

Carry out vehicle programming/encoding.

Check values for Condition Based Service (CBS) and correct if necessary.

cardiagn.com

62 30 517 Adjusting head-up display

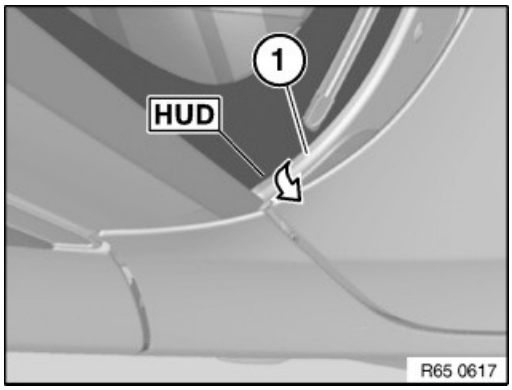

Note:
Vehicles with head-up displays are fitted with special windscreens.

These windscreens are marked with the letters "HUD" on the outside at the bottom right below the seal (1).

Prior to adjustment, fold seal (1) back, if necessary remove cowl panel cover on right, and make sure that a correct windscreen is fitted.

Connect vehicle to BMW diagnosis system.

Select service function under following path:

- Service function
- Body
- Head-Up Display
- Adjusting head-up display

Note:
The geometric representation of the Head-Up Display can be adjusted with the service function.

cardiagn.com

62 30 517 Adjusting head-up display \PREMIUM

1 – Adjusting head-up display

TECHNICAL INFORMATION

Observe the notes on the head-up display.
For more information see: 62 30 ... General notes on the head-up display

- Connect vehicle to the diagnosis system.
  - Driver assistance
  - Head-Up Display
  - Adjusting head-up display

  The geometric representation of the Head-Up Display can be adjusted with the service function.

Additional Information

Links

Repair instructions	Used in step
62 30 ... Notes on head-up display	1

cardiagn.com

62 30 ... Notes on head-up display

Note:
A special windscreen must be fitted to ensure that the Head-Up Display image can be projected correctly.

This windscreen comprises three sections. An outer and an inner glass pane are connected by a wedge-shaped plastic film.

The wedge shape prevents double projection of the Head-Up Display.

When the windscreen is replaced, the vehicle identification number and Electronic Parts Catalogue must be checked to ascertain whether the windscreen in question is suitable for HUD.

Example of the display with a conventional windscreen:

With a conventional windscreen, the projected image is reflected on the inner and outer glass pane, producing a double image.

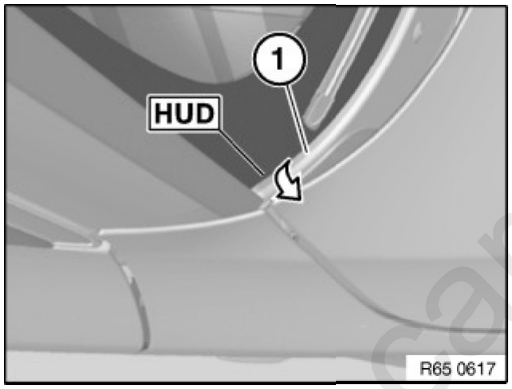

Note:
Windscreens for Head-Up Display, for vehicles with model year up to 2012, are marked with the letters "HUD" on the outside at the bottom right below the seal (1).

cardiagn.com

62 30 010 Removing and installing/renewing head-up display

Attention!

Read and comply with notes on protection against electrostatic damage (ESD protection).

Attention!

Comply with notes and notes on handling optical fibres.

Risk of damage!

Do not scratch glass pane of head-up display.

Necessary preliminary tasks:

- Remove instrument panel trim

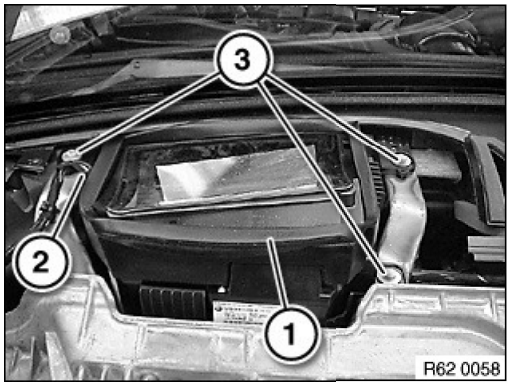

Note:
Similar to graphic.

Remove seal (1) from head-up display (2).

Loosen screws (3).

Tightening torque 62 30 1AZ.

Carefully feed out head-up display (2) in upward direction.

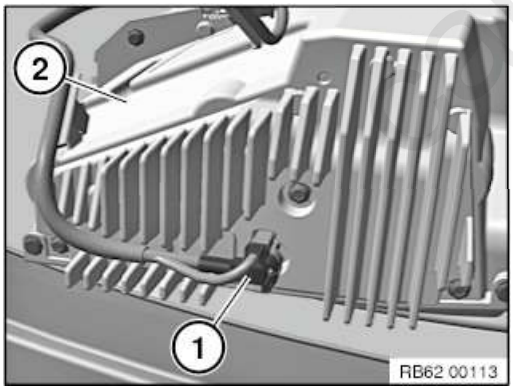

Unlock plug connection (1) on underside of head-up display (2) and disconnect.

Remove head-up display (2).

Installation note:
Clean the glass pane of the Head-Up Display.

Adjust head-up display.

<u>Replacement:</u>

Note:
When replacing the Head-Up Display in vehicles with production date **up to 03/2017** it is necessary to program the instrument cluster.

cardiagn.com

62 30 005 Removing and installing/replacing trim for Head-Up Display

Special tools required:

- 00 9 325

When working on trim panel components, make sure that visible surfaces are not scratched or damaged (e.g. by sharp-edged tools).

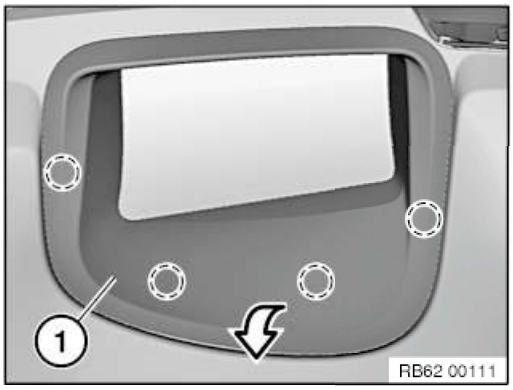

Release cover for head-up display (1) with special tool 00 9 325 at marked area from retaining clips.

Feed cover for head-up display (1) in direction of arrow out of instrument panel trim and remove.

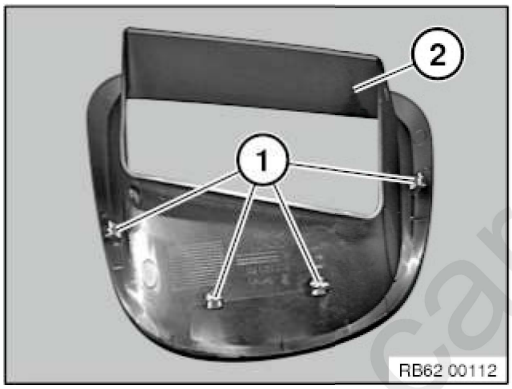

Installation note:
Retaining clips (1) must not be missing or damaged.

Make sure cover for head-up display (2) is correctly seated on instrument panel trim.

cardiagn.com