# Owner's Identification

OWNER _____

_____

ADDRESS _____
STREET

_____ _____ _____
CITY STATE/PROVINCE/TERRITORY ZIP CODE/ POSTAL CODE

V. I. N. _____

DELIVERY DATE _____
(Date sold to original retail purchaser)

DEALER NAME _____ DEALER NO. _____

ADDRESS _____
STREET

_____ _____ _____
CITY STATE/PROVINCE/TERRITORY ZIP CODE/ POSTAL CODE

OWNER'S SIGNATURE _____

DEALER'S SIGNATURE _____

This owner's manual should be considered a permanent part of the vehicle and should remain with the vehicle when it is sold.

This owner's manual covers all models of the ZDX. You may find descriptions of equipment and features that are not on your particular model.

The information and specifications included in this publication were in effect at the time of approval for printing. Honda Motor Co., Ltd. reserves the right, however, to discontinue or change specifications or design at any time without notice and without incurring any obligation whatsoever.

**POUR CLIENTS CANADIEN**
**AVIS IMPORTANT: Si vous avez besoin d'un Manuel du Conducteur en français, veuillez demander à votre concessionnaire de commander le numéro de pièce 33SZNC00**

Congratulations! Your selection of a 2010 Acura ZDX was a wise investment. It will give you years of driving pleasure.

One of the best ways to enhance the enjoyment of your new vehicle is to read this manual. In it, you will learn how to operate its driving controls and convenience items. Afterwards, keep this owner's manual in your vehicle so you can refer to it at any time.

Several warranties protect your new vehicle. Read the warranty booklet thoroughly so you understand the coverages and are aware of your rights and responsibilities.

Maintaining your vehicle according to the maintenance minder shown in the instrument panel helps to keep your driving trouble-free while it preserves your investment. When your vehicle needs maintenance, keep in mind that your dealer's staff is specially trained in servicing the many systems unique to your vehicle. Your dealer is dedicated to your satisfaction and will be pleased to answer any questions and concerns.

As you read this manual, you will find information that is preceded by a NOTICE symbol. This information is intended to help you avoid damage to your vehicle, other property, or the environment.

California Proposition 65 Warning

**WARNING:** This product contains or emits chemicals known to the State of California to cause cancer and birth defects or other reproductive harm.

Event Data Recorders

**This vehicle is equipped with one or more devices commonly referred to as event data recorders. These devices record front seat belt use, front passenger seat occupancy, airbag deployment data, and the failure of any airbag system component.** This data belongs to the vehicle owner and may not be accessed by anyone else except as legally required or with the permission of the vehicle owner.

Service Diagnostic Recorders

This vehicle is equipped with service-related devices that record information about powertrain performance. The data can be used to verify emissions law requirements and/or help technicians diagnose and solve service problems. It may also be combined with data from other sources for research purposes, but it remains confidential.

Your safety, and the safety of others, is very important. And operating this vehicle safely is an important responsibility.

To help you make informed decisions about safety, we have provided operating procedures and other information on labels and in this manual. This information alerts you to potential hazards that could hurt you or others.

Of course, it is not practical or possible to warn you about all the hazards associated with operating or maintaining your vehicle. You must use your own good judgement.

You will find this important safety information in a variety of forms, including:

- **Safety Labels** – on the vehicle.
- **Safety Messages** – preceded by a safety alert symbol ⚠ and one of three signal words: **DANGER**, **WARNING**, or **CAUTION**.

  These signal words mean:

| | |
|---|---|
| **⚠ DANGER** | You WILL be KILLED or SERIOUSLY HURT if you don't follow instructions. |
| **⚠ WARNING** | You CAN be KILLED or SERIOUSLY HURT if you don't follow instructions. |
| **⚠ CAUTION** | You CAN be HURT if you don't follow instructions. |

- **Safety Headings** – such as Important Safety Reminders or Important Safety Precautions.
- **Safety Section** – such as Driver and Passenger Safety.
- **Instructions** – how to use this vehicle correctly and safely.

This entire book is filled with important safety information – please read it carefully.

# Important Handling Information

Your ZDX has higher ground clearance than a passenger vehicle designed for use only on pavement. Higher ground clearance has many advantages for off-highway driving. It allows you to travel over bumps, obstacles, and rough terrain. It also provides good visibility so you can anticipate problems earlier.

These advantages come at some cost. Because your vehicle is taller and rides higher off the ground, it has a high center of gravity. This means your vehicle can tip or roll over if you make abrupt turns. Utility vehicles have a significantly higher rollover rate than other types of vehicles. In a rollover crash, an unbelted person is significantly more likely to die than a person wearing a seat belt. As a reminder, make sure you and your passengers always wear seat belts.

For information on how to reduce the risk of rollover, read “Driving Guidelines” on page 472 of this manual and the *Off-Highway Driving Guidelines* section on page 528. Failure to operate your vehicle correctly might result in loss of control or a crash.

# Contents

**Your Vehicle at a Glance** (main controls) ..... 3

**Driver and Passenger Safety** (seat belts, SRS, and child protection) ..... 5

**Instruments and Controls** (indicators, gauges, multi-information display, dashboard, and steering column) ..... 61

**Features** (climate control, audio, steering wheel, security, cruise control, HomeLink ®, and other convenience items) ..... 219

**Before Driving** (fuel, vehicle break-in, and cargo loading) ..... 453

**Driving** (engine and transmission operation) ..... 471

**Maintenance** (minder, fluid checking, minor services, and vehicle storage) ..... 531

**Taking Care of the Unexpected** (flat tire, jump starting, overheating, and fuses) ..... 577

**Technical Information** (vehicle specifications, tires, and emissions controls) ..... 605

**Warranty and Client Relations (U.S. and Canada only)** (warranty and contact information) ..... 621

**Index** ..... I

**Service Information Summary** (fluid capacities and tire pressures) ..... **last page**

# Overview of Contents

**Contents**
A convenient reference to the sections in this manual.

**Your Vehicle at a Glance**
A quick reference to the main controls in your vehicle.

**Driver and Passenger Safety**
Important information about the proper use and care of your vehicle's seat belts, an overview of the supplemental restraint system, and valuable information on how to protect children with child restraints.

**Instruments and Controls**
Explains the purpose of each instrument panel indicator and gauge, and how to use the controls on the dashboard and steering column.

**Features**
How to operate the climate control system, the audio system, and other convenience features.

**Before Driving**
What gasoline to use, how to break-in your new vehicle, and how to load luggage and other cargo.

**Driving**
The proper way to start the engine, shift the transmission, and park; plus what you need to know if you're planning to tow a trailer.

**Maintenance**
The maintenance minder shows you when you need to take your vehicle to the dealer for maintenance service. There is also a list of things to check and instructions on how to check them.

**Taking Care of the Unexpected**
This section covers several problems motorists sometimes experience, and details how to handle them.

**Technical Information**
ID numbers, dimensions, capacities, and technical information.

**Warranty and Client Relations (U.S. and Canada only)**
A summary of the warranties covering your new vehicle, and how to contact us for any reason. Refer to your warranty manual for detailed information.

**Index**

**Service Information Summary**
A summary of the information you need when you pull up to the fuel pump.

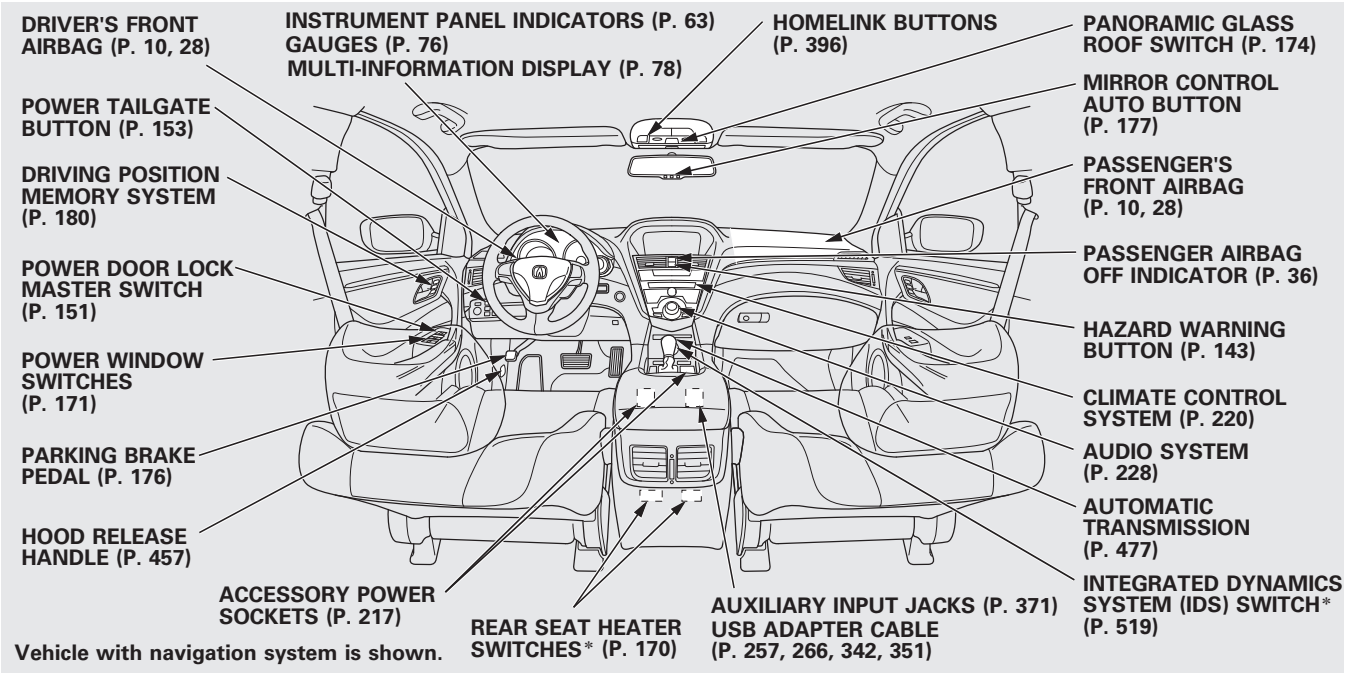


Vehicle with navigation system is shown.

*: If equipped

*CONTINUED*

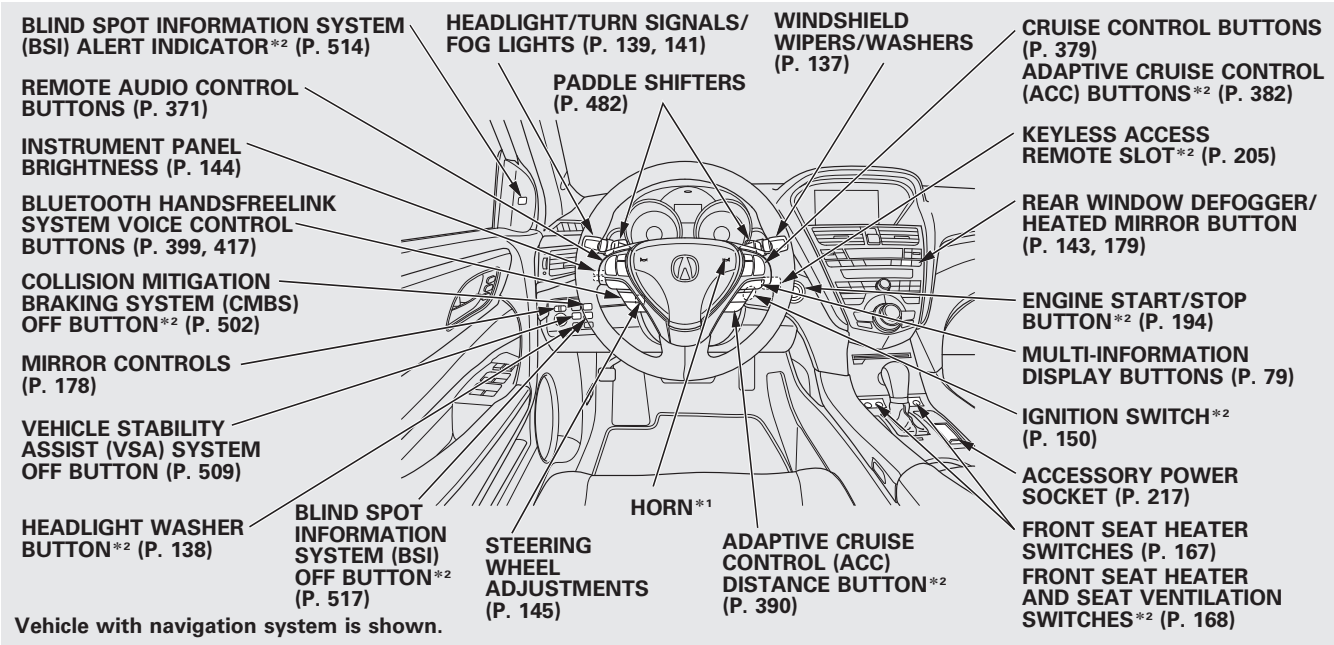


Vehicle with navigation system is shown.

*1: To use the horn, press the center pad of the steering wheel.
*2: If equipped

This section gives you important information about how to protect yourself and your passengers. It shows you how to use seat belts. It explains how your airbags work. And it tells you how to properly restrain infants and children in your vehicle.


Important Safety Precautions ..... 6
Your Vehicle's Safety Features..... 8
Seat Belts ..... 9
Airbags ..... 10
Protecting Adults and Teens..... 12
1. Close and Lock the Doors..... 12
2. Adjust the Front Seats ..... 14
3. Adjust the Seat-Backs ..... 15
4. Adjust the Head Restraints..... 15
5. Fasten and Position the Seat Belts ..... 16
6. Maintain a Proper Sitting Position ..... 18
Advice for Pregnant Women..... 19
Additional Safety Precautions ..... 20
Additional Information About Your Seat Belts ..... 21
Seat Belt System Components ..... 21
Lap/Shoulder Belt..... 22
Automatic Seat Belt Tensioners ..... 23
Seat Belt e-pretensioners..... 24
Seat Belt Maintenance ..... 25
Additional Information About Your Airbags..... 26
Airbag System Components ..... 26
How Your Front Airbags Work ..... 28
How Your Side Airbags Work..... 32
How Your Side Curtain Airbags Work ..... 33
How the SRS Indicator Works ..... 34
How the Side Airbag Off Indicator Works..... 35
How the Passenger Airbag Off Indicator Works ..... 36
Airbag Service ..... 37
Additional Safety Precautions ..... 37
Protecting Children – General Guidelines ..... 39
All Children Must Be Restrained ..... 39
All Children Should Sit in a Back Seat ..... 40
The Passenger's Front Airbag Can Pose Serious Risks ..... 40
If You Must Drive with Several Children..... 42
If a Child Requires Close Attention ..... 42
Additional Safety Precautions ..... 42
Protecting Infants and Small Children ..... 44
Protecting Infants..... 44
Protecting Small Children ..... 45
Selecting a Child Seat ..... 47
Installing a Child Seat ..... 48
Installing a Child Seat with LATCH ..... 49
Installing a Child Seat with a Lap/Shoulder Belt..... 51
Installing a Child Seat with a Tether..... 53
Protecting Larger Children..... 54
Checking Seat Belt Fit ..... 54
Using a Booster Seat ..... 55
When Can a Larger Child Sit in Front..... 56
Additional Safety Precautions ..... 57
Carbon Monoxide Hazard ..... 58
Safety Labels ..... 59

You'll find many safety recommendations throughout this section, and throughout this manual. The recommendations on this page are the ones we consider to be the most important.

**Always Wear Your Seat Belt**
A seat belt is your best protection in all types of collisions. Airbags are designed to supplement seat belts, not replace them. So even though your vehicle is equipped with airbags, make sure you and your passengers always wear your seat belts, and wear them properly (see page 16).

**Restrain All Children**
Children age 12 and under should ride properly restrained in a back seat, not the front seat. Infants and small children should be restrained in a child seat. Larger children should use a booster seat and a lap/shoulder belt until they can use the belt properly without a booster seat (see pages 39 – 57).

**Be Aware of Airbag Hazards**
While airbags can save lives, they can cause serious or fatal injuries to occupants who sit too close to them, or are not properly restrained. Infants, young children, and short adults are at the greatest risk. Be sure to follow all instructions and warnings in this manual.

**Don't Drink and Drive**
Alcohol and driving don't mix. Even one drink can reduce your ability to respond to changing conditions, and your reaction time gets worse with every additional drink. So don't drink and drive, and don't let your friends drink and drive, either.

**Pay Appropriate Attention to the Task of Driving Safely**
Engaging in mobile phone conversation or other activities that keep you from paying close attention to the road, other vehicles and pedestrians could lead to a crash. Remember, situations can change quickly, and only you can decide when it is safe to divert attention away from driving.

**Control Your Speed**
Excessive speed is a major factor in crash injuries and deaths. Generally, the higher the speed, the greater the risk, but serious injuries can also occur at lower speeds. Never drive faster than is safe for current conditions, regardless of the maximum speed posted.

**Keep Your Vehicle in Safe Condition**
Having a tire blowout or a mechanical failure can be extremely hazardous. To reduce the possibility of such problems, check your tire pressures and condition frequently, and perform all regularly scheduled maintenance (see page 567).

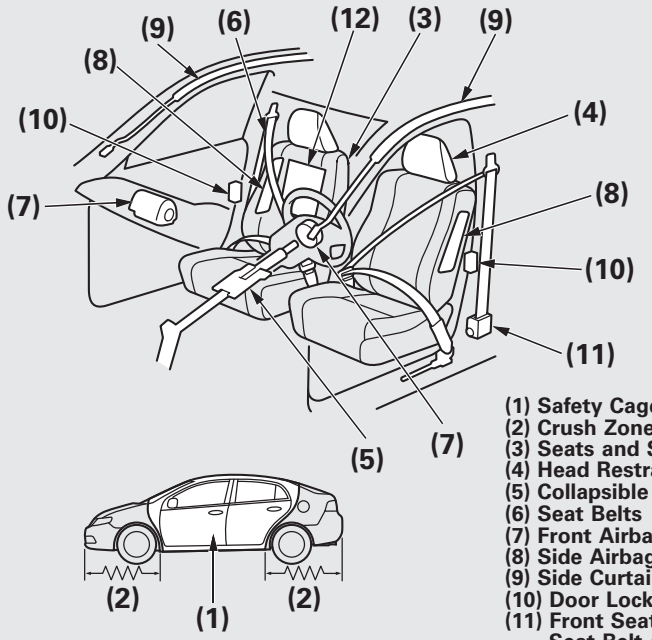


(1) Safety Cage
(2) Crush Zones
(3) Seats and Seat-Backs
(4) Head Restraints
(5) Collapsible Steering Column
(6) Seat Belts
(7) Front Airbags
(8) Side Airbags
(9) Side Curtain Airbags
(10) Door Locks
(11) Front Seat Belt Tensioners/ Seat Belt e-pretensioners*
(12) Occupant Position Detection System (OPDS) Sensor

*: On models with Collision Mitigation Braking System (CMBS)

Your vehicle is equipped with many features that work together to protect you and your passengers during a crash.

Some features do not require any action on your part. These include a strong steel framework that forms a safety cage around the passenger compartment, front and rear crush zones, a collapsible steering column, and tensioners that tighten the front seat belts in a crash.

However, you and your passengers can't take full advantage of these features unless you remain sitting in the correct position and ***always wear your seat belts.*** In fact, some safety features can contribute to injuries if they are not used properly.

The following pages explain how you can take an active role in protecting yourself and your passengers.

## Seat Belts

Your vehicle is equipped with seat belts in all seating positions.

Your seat belt system also includes an indicator on the instrument panel and a beeper to remind the driver and front passenger to fasten your seat belts.

### *Why Wear Seat Belts*

Seat belts are the single most effective safety device for adults and larger children. (Infants and smaller children must be properly restrained in child seats.)

Not wearing a seat belt properly increases the chance of serious injury or death in a crash, even though your vehicle has airbags.

In addition, most states and all Canadian provinces and territories require you to wear seat belts.

**⚠ WARNING**

Not wearing a seat belt properly increases the chance of serious injury or death in a crash, even though your vehicle has airbags.

Be sure you and your passengers always wear seat belts and wear them properly.

When properly worn, seat belts:

- Keep you connected to the vehicle so you can take advantage of the vehicle's built-in safety features.
- Help protect you in almost every type of crash, including:
  - frontal impacts
  - side impacts
  - rear impacts
  - rollovers
- Help keep you from being thrown against the inside of the vehicle and against other occupants.
- Keep you from being thrown out of the vehicle.
- Help keep you in a good position should the airbags ever deploy. A good position reduces the risk of injury from an inflating airbag and allows you to get the best advantage from the airbag.

Of course, seat belts cannot completely protect you in every crash. But in most cases, seat belts can reduce your risk of serious injury.

***What you should do:*** Always wear your seat belt, and make sure you wear it properly.

## Airbags

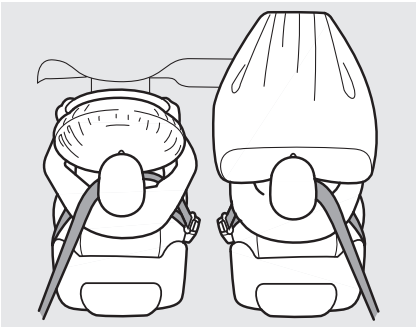

Your vehicle has a supplemental restraint system (SRS) with front airbags to help protect the heads and chests of the driver and a front seat passenger during a moderate to severe frontal collision (see page 28 for more information on how your front airbags work).

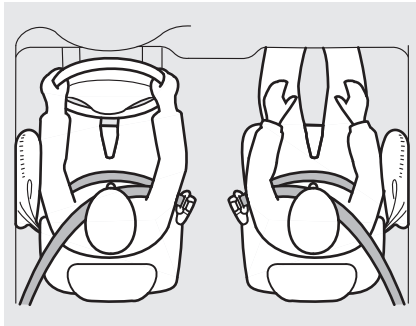

Your vehicle also has side airbags to help protect the upper torso of the driver or a front seat passenger during a moderate to severe side impact (see page 32 for more information on how your side airbags work).

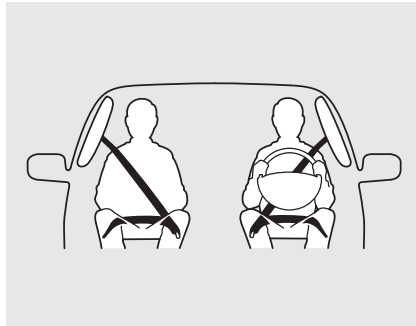

In addition, your vehicle has side curtain airbags to help protect the heads of the driver, front passenger, and passengers in the outer rear seating positions during a moderate to severe side impact or rollover (see page 33 for more information on how your side curtain airbags work).

The most important things you need to know about your airbags are:

- ***Airbags do not replace seat belts.*** They are designed to supplement the seat belts.
- ***Airbags offer no protection in rear impacts, or minor frontal or side collisions.***
- ***Airbags can pose serious hazards.*** To do their job, airbags must inflate with tremendous force. So while airbags help save lives, they can cause minor injuries or more serious or even fatal injuries if occupants are not properly restrained or sitting properly.

***What you should do:*** Always wear your seat belt properly, and sit upright and as far back from the steering wheel as possible while allowing full control of the vehicle. A front passenger should move their seat as far back from the dashboard as possible.

The rest of this section gives more detailed information about how you can maximize your safety.

Remember, however, that no safety system can prevent all injuries or deaths that can occur in a severe crash, even when seat belts are properly worn and the airbags deploy.

**Introduction**
The following pages provide instructions on how to properly protect the driver, adult passengers, and teenage children who are large enough and mature enough to drive or ride in the front.

See pages 39 – 57 for important guidelines on how to properly protect infants, small children, and larger children who ride in your vehicle.

**1. Close and Lock the Doors**
After everyone has entered the vehicle, be sure the doors and the tailgate are closed and locked.

Your vehicle has a door and tailgate open indicator (red) on the instrument panel to indicate when any door or the tailgate is open.

See page 151 for how to lock the doors, and page 69 for how the door and tailgate open indicator works.

Your vehicle also has a door and tailgate open indicator on the multi-information display to indicate when a specific door or the tailgate is open. You will see the appropriate indicator(s) and the message for each condition.

You will also hear a beep when you turn the ignition switch* to the ON (II) position, and each time you open any door or the tailgate with the key in the ON (II) position.

*: Models equipped with the keyless access system have an engine start/stop button instead of an ignition switch. ON mode is the equivalent of ON (II). For more information, see pages 194 and 196.

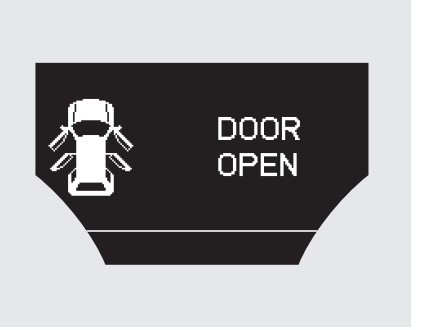


When one or more doors are open, the “DOOR OPEN” message will come on.

When the tailgate is open, the "TAILGATE OPEN" message will come on.

When the tailgate or one or more doors are open, the corresponding indicator for each condition will come on.

The above illustration shows that all doors and the tailgate are open.

Locking the doors and the tailgate reduces the chance of someone being thrown out of the vehicle during a crash, and it helps prevent passengers from accidentally opening a door or the tailgate and falling out.

Locking the doors and the tailgate also helps prevent an outsider from unexpectedly opening a door or the tailgate when you come to a stop.

Your vehicle has the auto door locking/unlocking feature. For more information, see page 128.

### 2. Adjust the Front Seats

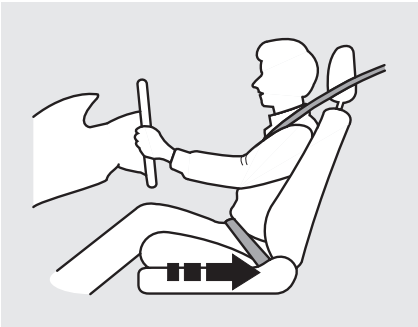

Adjust the driver's seat as far to the rear as possible while allowing you to maintain full control of the vehicle. Have a front passenger adjust their seat as far to the rear as possible.

If you sit too close to the steering wheel or dashboard, you can be seriously injured by an inflating front airbag, or by striking the steering wheel or dashboard.

The National Highway Traffic Safety Administration and Transport Canada recommend that drivers allow at least 10 inches (25 cm) between the center of the steering wheel and the chest. In addition to adjusting the seat, you can adjust the steering wheel up and down, and in and out (see page 145).

If you cannot get far enough away from the steering wheel and still reach the controls, we recommend that you investigate whether some type of adaptive equipment may help.

**⚠ WARNING**

Sitting too close to a front airbag can result in serious injury or death if the front airbags inflate.

Always sit as far back from the front airbags as possible.

See page 161 for how to adjust the front seats.

### 3. Adjust the Seat-Backs

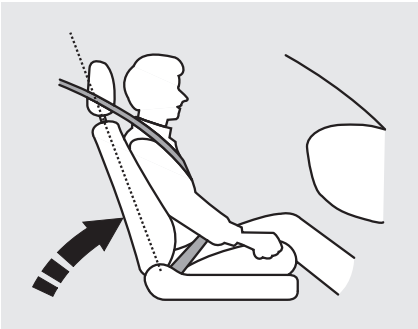

Adjust the driver's seat-back to a comfortable, upright position, leaving ample space between your chest and the airbag cover in the center of the steering wheel.

Passengers with adjustable seat-backs should also adjust their seat-back to a comfortable, upright position.

**⚠ WARNING**

Reclining the seat-back too far can result in serious injury or death in a crash.

Adjust the seat-back to an upright position, and sit well back in the seat.

Reclining a seat-back so that the shoulder part of the belt no longer rests against the occupant's chest reduces the protective capability of the belt. It also increases the chance of sliding under the belt in a crash and being seriously injured. The farther a seat-back is reclined, the greater the risk of injury.

See page 161 for how to adjust the seat-backs.

### 4. Adjust the Head Restraints

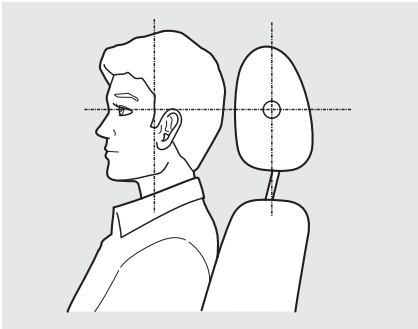

Adjust the driver's head restraint so the center of the back of your head rests against the center of the restraint.

Have passengers adjust their head restraints properly as well. Taller persons should adjust their restraint as high as possible.

*CONTINUED*

**⚠ WARNING**

Improperly positioning head restraints reduces their effectiveness and you can be seriously injured in a crash.

Make sure head restraints are in place and positioned properly before driving.

Properly adjusted head restraints will help protect occupants from whiplash and other crash injuries.

See page 162 for how to adjust the head restraints and how the driver's and front passenger's active head restraints work.

**5. Fasten and Position the Seat Belts**

Insert the latch plate into the buckle, then tug on the belt to make sure the belt is securely latched. Check that the belt is not twisted, because a twisted belt can cause serious injuries in a crash.

Position the lap part of the belt as low as possible across your hips, then pull up on the shoulder part of the belt so the lap part fits snugly. This lets your strong pelvic bones take the force of a crash and reduces the chance of internal injuries.

If necessary, pull up on the belt again to remove any slack, then check that the belt rests across the center of your chest and over your shoulder.

This spreads the forces of a crash over the strongest bones in your upper body.

**⚠ WARNING**

Improperly positioning the seat belts can cause serious injury or death in a crash.

Make sure all seat belts are properly positioned before driving.

If the seat belt touches or crosses your neck, or if it crosses your arm instead of your shoulder, you need to adjust the seat belt anchor height.

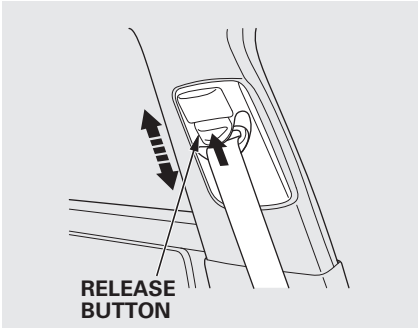


The front seats have adjustable seat belt anchors. To adjust the height of an anchor, press and hold the release button and slide the anchor up or down as needed (it has four positions).

*CONTINUED*

***Never place the shoulder portion of a lap/shoulder belt under your arm or behind your back.*** This could cause very serious injuries in a crash.

If a seat belt does not seem to work properly, it may not protect the occupant in a crash.

***No one should sit in a seat with an inoperative seat belt.*** Using a seat belt that is not working properly can result in serious injury or death. Have your dealer check the belt as soon as possible.

See page 21 for additional information about your seat belts and how to take care of them.

### 6. Maintain a Proper Sitting Position

After all occupants have adjusted their seats and head restraints, and put on their seat belts, it is very important that they continue to sit upright, well back in their seats, with their feet on the floor, until the vehicle is safely parked and the engine is off.

Sitting improperly can increase the chance of injury during a crash. For example, if an occupant slouches, lies down, turns sideways, sits forward, leans forward or sideways, or puts one or both feet up, the chance of injury during a crash is greatly increased.

In addition, an occupant who is out of position in the front seat can be seriously or fatally injured in a crash by striking interior parts of the vehicle or being struck by an inflating front airbag.

**⚠ WARNING**

Sitting improperly or out of position can result in serious injury or death in a crash.

Always sit upright, well back in the seat, with your feet on the floor.

## Advice for Pregnant Women

If you are pregnant, the best way to protect yourself and your unborn child when driving or riding in a vehicle is to always wear a seat belt, and keep the lap part of the belt as low as possible across the hips.

When driving, remember to sit upright and adjust the seat as far back as possible while allowing full control of the vehicle. When riding as a front passenger, adjust the seat as far back as possible.



*CONTINUED*

This will reduce the risk of injuries to both you and your unborn child that can be caused by a crash or an inflating front airbag.

Each time you have a checkup, ask your doctor if it's okay for you to drive.

### Additional Safety Precautions

- ***Never let passengers ride in the cargo area or on top of a folded-down back seat.*** If they do, they could be very seriously injured in a crash.
- ***Passengers should not stand up or change seats while the vehicle is moving.*** A passenger who is not wearing a seat belt during a crash or emergency stop can be thrown against the inside of the vehicle, against other occupants, or out of the vehicle.
- ***Two people should never use the same seat belt.*** If they do, they could be very seriously injured in a crash.
- ***Do not put any accessories on seat belts.*** Devices intended to improve occupant comfort or reposition the shoulder part of a seat belt can reduce the protective capability of the belt and increase the chance of serious injury in a crash.
- ***Do not place hard or sharp objects between yourself and a front airbag.*** Carrying hard or sharp objects on your lap, or driving with a pipe or other sharp object in your mouth, can result in injuries if your front airbag inflates.
- ***Keep your hands and arms away from the airbag covers.*** If your hands or arms are close to an airbag cover, they could be injured if the airbag inflates.

- ***Do not attach or place objects on the front airbag covers.*** Objects on the covers marked "SRS AIRBAG" could interfere with the proper operation of the airbags or be propelled inside the vehicle and hurt someone if the airbags inflate.
- ***Do not attach hard objects on or near a door.*** If a side airbag or a side curtain airbag inflates, a cup holder or other hard object attached on or near the door could be propelled inside the vehicle and hurt someone.
- ***Do not cover or replace front seat-back covers without consulting your dealer.*** Improperly replacing or covering front seat-back covers can prevent your side airbags from inflating during a side impact.

**Seat Belt System Components**

Your seat belt system includes lap/shoulder belts in all seating positions. The front seat belts are also equipped with automatic seat belt tensioners, and on models with collision mitigation braking system (CMBS), seat belt e-pretensioners.

The seat belt system includes an indicator on the instrument panel and a beeper to remind you and your passengers to fasten your seat belts.

This system monitors the front seat belts. If you turn the ignition switch* to the ON (II) position before your seat belt is fastened, the beeper will sound and the indicator will flash. If your seat belt is not fastened before the beeper stops, the indicator will stop flashing but remain on.

If a front passenger does not fasten their seat belt, the indicator will come on about 6 seconds after the ignition switch is turned to the ON (II) position.

*CONTINUED*

If either the driver or a front passenger does not fasten their seat belt while driving, the beeper will sound and the indicator will flash again at regular intervals.

You will also see a “FASTEN SEAT BELT” or “FASTEN PASSENGER SEAT BELT” message on the multi-information display (see page 90).

When no one is sitting in the front passenger's seat, or a child or small adult is riding there, the indicator should not come on and the beeper should not sound.

*:Models equipped with the keyless access system have an engine start/stop button instead of an ignition switch. ON mode is the equivalent of ON (II). For more information, see pages 194 and 196.

If the indicator comes on or the beeper sounds when the driver's seat belt is latched and there is no front seat passenger and no items on the front seat, something may be interfering with the monitoring system. Look for and remove:

- Any items under the front passenger's seat.
- Any object(s) hanging on the seat or in the seat-back pocket.
- Any object(s) touching the rear of the seat-back.

If no obstructions are found, have your vehicle checked by a dealer.

**Lap/Shoulder Belt**

The lap/shoulder belt goes over your shoulder, across your chest, and across your hips.

To fasten the belt, insert the latch plate into the buckle, then tug on the belt to make sure the buckle is latched (see page 16 for how to properly position the belt).

To unlock the belt, press the red PRESS button on the buckle. Guide the belt across your body so that it retracts completely. After exiting the vehicle, be sure the belt is out of the way and will not get closed in the door.

All seat belts have an emergency locking retractor. In normal driving, the retractor lets you move freely in your seat while it keeps some tension on the belt. During a collision or sudden stop, the retractor automatically locks the belt to help restrain your body.

The seat belts in all positions except the driver's have a lockable retractor that must be activated to secure a child seat (see page 51).

If the shoulder part of the belt is pulled all the way out, the lockable retractor will activate. The belt will retract, but it will not allow the passenger to move freely.

To deactivate the lockable retractor, unlatch the buckle and let the seat belt fully retract. To refasten the seat belt, pull it out only as far as needed.

**Automatic Seat Belt Tensioners**

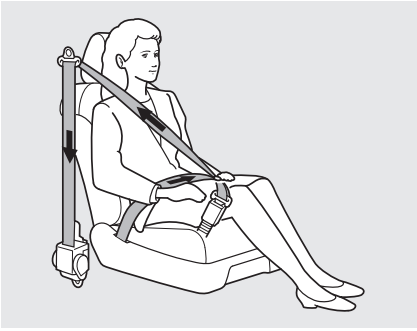

For added protection, the front seat belts are equipped with automatic seat belt tensioners. When activated, the tensioners immediately tighten the belts to help hold the driver and a front passenger in position.

The tensioners can be activated during a collision in which the front airbags *do not deploy.* In this case, the airbags would not be needed, but the extra tension in the seat belt could be helpful.

If the tensioner is activated, the SRS indicator comes on and the tensioner must be replaced.

## Seat Belt e-pretensioners

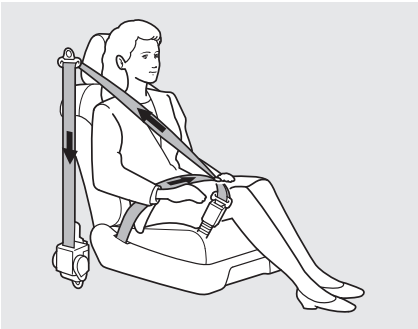

*On models with Collision Mitigation Braking System™ (CMBS™)*
For added safety, the front seat belts are equipped with e-pretensioners that work in combination with the collision mitigation braking system™ (CMBS™) (see page 498) and the brake pedal assist function (see page 495).

If your vehicle gets too close to the vehicle ahead of it in your lane, the driver's e-pretensioner slightly retracts the seat belt to alert the driver of the approaching vehicle. If a collision with the vehicle in front of you is likely, the e-pretensioners on both front seats retract the seat belts with enough force to properly restrain you and your front passenger. After they activate, the e-pretensioners release the retracted seat belts.

To get the full benefit of the e-pretensioners, you and your front passenger must sit normally in your seats and wear your seat belts properly (see page 16).

The e-pretensioners do not activate when the vehicle stability assist (VSA) off indicator on the instrument panel is on.

If the automatic seat belt tensioners are activated by a collision, both front seat belts and all related components must be replaced (see page 25). If only the e-pretensioners were activated, no components need to be replaced.

In addition, the front passenger's e-pretensioner does not activate when the passenger's airbag is automatically turned off because the weight sensor detects a child in the front passenger's seat.

**Seat Belt Maintenance**
For safety, you should check the condition of your seat belts regularly.

Pull each belt out fully, and look for frays, cuts, burns, and wear. Check that the latches work smoothly and the belts retract easily. If a belt does not retract easily, cleaning the belt may correct the problem (see page 562). Any belt that is not in good condition or working properly will not provide good protection and should be replaced as soon as possible.

Acura provides a limited warranty on seat belts. See your *Acura Warranty Information* booklet for details.

If a seat belt is worn during a crash, it must be replaced by the dealer. A belt that has been worn during a crash may not provide the same level of protection in a subsequent crash.

The dealer should also inspect the anchors for damage and replace them if needed. If the automatic seat belt tensioners activate during a crash, they must be replaced.

**⚠ WARNING**

Not checking or maintaining seat belts can result in serious injury or death if the seat belts do not work properly when needed.

Check your seat belts regularly and have any problem corrected as soon as possible.

## Airbag System Components

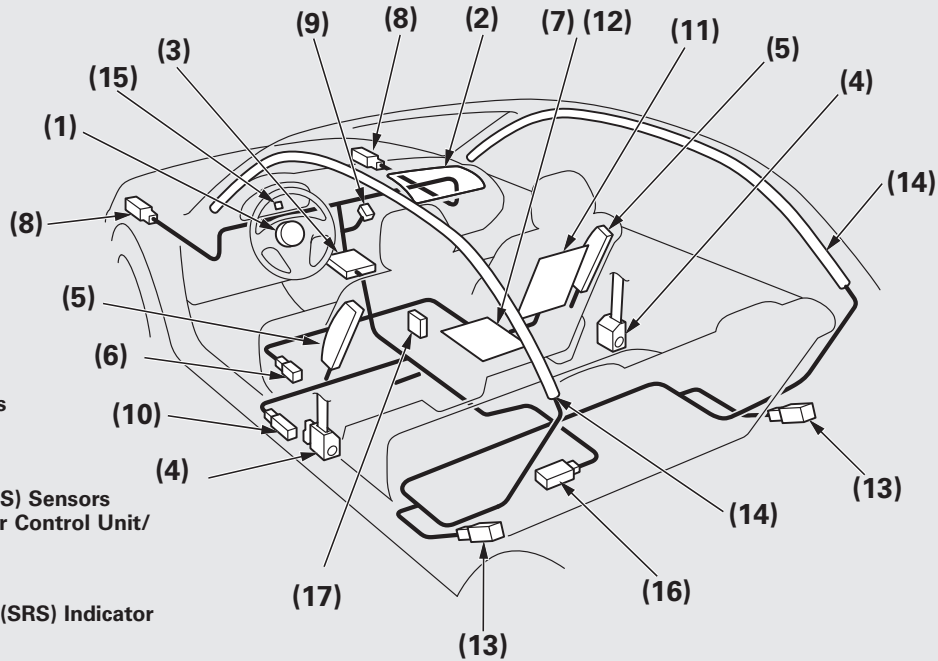


(1) Driver's Front Airbag
(2) Passenger's Front Airbag
(3) Control Unit/Rollover Sensor
(4) Front Seat Belt Tensioners/
Seat Belt e-pretensioners*
(5) Side Airbags
(6) Driver's Seat Position Sensor
(7) Front Passenger's Weight Sensors
(8) Front Impact Sensors
(9) Passenger Airbag Off Indicator
(10) Side Impact Sensors (First)
(11) Occupant Detection System (ODS) Sensors
(12) Front Passenger's Weight Sensor Control Unit/
ODS Sensors Control Unit
(13) Side Impact Sensors (second)
(14) Side Curtain Airbags
(15) Supplemental Restraint System (SRS) Indicator
(16) Safing Sensor
(17) e-pretensioner Control Unit*
*: On models with CMBS

Your Airbag System (SRS) includes:

- Two SRS (Supplemental Restraint System) front airbags. The driver's airbag is stored in the center of the steering wheel; the front passenger's airbag is stored in the dashboard. Both are marked “SRS AIRBAG” (see page 28).
- Two side airbags, one for the driver and one for a front passenger. The airbags are stored in the outer edges of the seat-backs. Both are marked “SIDE AIRBAG” (see page 32).
- Two side curtain airbags, one for each side of the vehicle. The airbags are stored in the roof above the side windows. The front and rear pillars are marked “SIDE CURTAIN AIRBAG” (see page 33).
- On models with CMBS, front seat belt e-pretensioners (see page 24).
- Automatic front seat belt tensioners (see page 23).
- Sensors that can detect a moderate to severe front impact, side impact, or if your vehicle is about to rollover.
- Sensors that can detect whether a child is in the passenger's side airbag path and signal the control unit to turn the airbag off (see page 33).
- Sensors that can detect whether the driver's seat belt and the front passenger's seat belt are latched or unlatched (see page 21).
- A driver's seat position sensor that monitors the distance of the seat from the front airbag. If the seat is too far forward, the airbag will inflate with less force (see page 31).
- Weight sensors that monitor the weight on the front passenger's seat. If the weight is about 65 lbs (29 kg) or less (the weight of an infant or small child), the passenger's front airbag will be turned off (see page 31).
- A rollover sensor that can detect if your vehicle is about to roll over and signal the control unit to deploy both side curtain airbags (see page 34).

*CONTINUED*

- A sophisticated electronic system that continually monitors and records information about the sensors, the control unit, the airbag activators, the seat belt tensioners, and driver and front passenger seat belt use when the ignition switch is in the ON (II) position.

  Models equipped with the keyless access system have an engine start/stop button instead of an ignition switch. ON mode is the equivalent of ON (II). For more information, see pages 194 and 196.
- An indicator on the instrument panel that alerts you to a possible problem with your airbag system components (see page 34).
- An indicator on the instrument panel that alerts you that the passenger's side airbag has been turned off (see page 35).
- An indicator on the dashboard that alerts you that the passenger's front airbag has been turned off (see page 36).
- Emergency backup power in case your vehicle's electrical system is disconnected in a crash.

### How Your Front Airbags Work

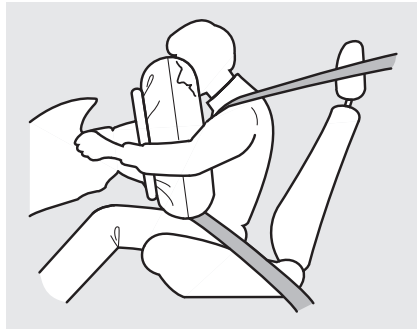

If you ever have a moderate to severe frontal collision, sensors will detect the vehicle's rapid deceleration.

If the rate of deceleration is high enough, the control unit will inflate the driver's and front passenger's airbags, at the time and with the force needed.

During a frontal crash, your seat belt restrains your lower body and torso, and the front airbag helps protect your head and chest.

Although both airbags normally inflate within a split second of each other, it is possible for only one airbag to deploy.

This can happen if the severity of a collision is at the margin, or threshold, that determines whether or not the airbags will deploy. In such cases, the seat belt will provide sufficient protection, and the supplemental protection offered by the airbag would be minimal.

Only the driver's airbag can deploy if there is no passenger in the front seat, or if the advanced airbag system has turned the passenger's airbag off (see page 36).

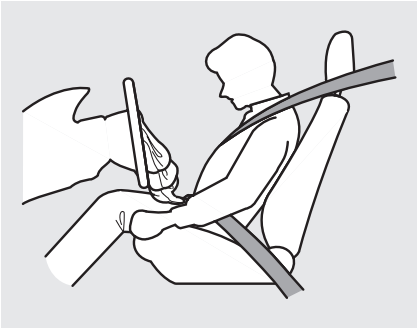

After inflating, the front airbags immediately deflate, so they won't interfere with the driver's visibility, or the ability to steer or operate other controls.

The total time for inflation and deflation is one-tenth of a second, so fast that most occupants are not aware that the airbags deployed until they see them lying in their laps.

After a crash, you may see what looks like smoke. This is actually powder from the airbag's surface. Although the powder is not harmful, people with respiratory problems may experience some temporary discomfort. If this occurs, get out of the vehicle as soon as it is safe to do so.



*CONTINUED*

***Dual-Stage Airbags***
Your front airbags are dual-stage airbags. This means they have two inflation stages that can be ignited sequentially or simultaneously, depending on crash severity.

In a ***more severe*** crash, both stages will ignite simultaneously to provide the quickest and greatest protection.

In a ***less severe*** crash, one stage will ignite first, then the second stage will ignite a split second later. This provides longer airbag inflation time with a little less force.

***Dual-Threshold Airbags***
Your front airbags are also dual-threshold airbags. Airbags with this feature have two deployment thresholds that depend on whether sensors detect the occupant is wearing a seat belt or not.

If the occupant's belt is ***not latched,*** the airbag will deploy at a slightly lower threshold, because the occupant would need extra protection.

If the occupant's belt is ***latched,*** the airbag will inflate at a slightly higher threshold, when the airbag would be needed to supplement the protection provided by the seat belt.

***Advanced Airbags***
Your front airbags are also advanced airbags. The main purpose of this feature is to help prevent airbag-caused injuries to short drivers and children or small statured adults who ride in front.

For both advanced airbags to work properly:

- Occupants must sit upright and wear their seat belts properly.
- Do not spill any liquids on or under the seats, cover the sensors, or put any objects or metal items under the front seats.

Failure to follow these instructions could damage the sensors or prevent them from working properly.

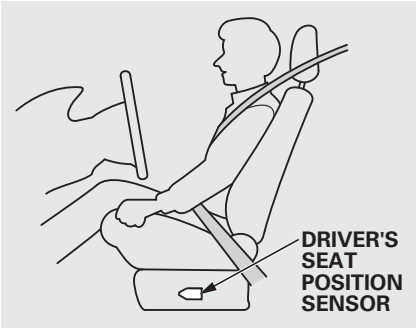


The driver's advanced front airbag system includes a seat position sensor under the seat. If the seat is too far forward, the airbag will inflate with less force, regardless of the severity of the impact.

If there is a problem with the sensor, the SRS indicator will come on, and the airbag will inflate in the normal manner regardless of the driver's seating position.

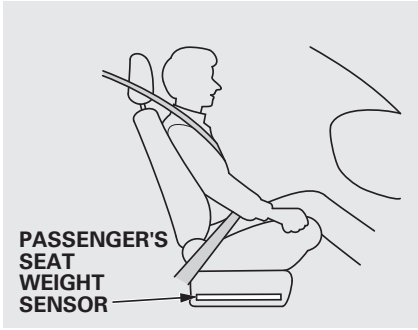


The passenger's advanced front airbag system has weight sensors under the seat. Although Acura does not encourage carrying an infant or small child in front, if the sensors detect the weight of an infant or small child (up to about 65 lbs or 29 kg), the system will automatically turn the passenger's front airbag off.

Be aware that objects placed on the passenger's seat can also cause the airbag to be turned off.

When the passenger airbag gets turned off by the weight sensors, a “passenger airbag off” indicator in the center of the dashboard comes on (see page 36).

If the weight sensors detect there is no passenger in the front seat, the airbag is automatically turned off. However, the passenger airbag off indicator in this situation will not come on.

To ensure that the passenger's advanced front airbag system will work properly, ***do not do anything that would increase or decrease the weight on the front passenger's seat.*** This includes:

- A rear passenger pushing or pulling on the back of the front passenger's seat.

*CONTINUED*

- Moving the front seat forcibly back against cargo on the seat or floor behind it.
- Hanging heavy items on the front passenger seat, or placing heavy items in the seat-back pocket.
- Moving the front passenger's seat or seat-back forcibly back against the folded rear seat.
- Back seat passengers should not wedge objects or intentionally force their feet under the front passenger seat.

Also, make sure the floor mat behind the front passenger's seat is hooked to the floor mat anchor (see page 563). If it is not, the mat may interfere with the proper operation of the sensors and operation of the seat.

**How Your Side Airbags Work**

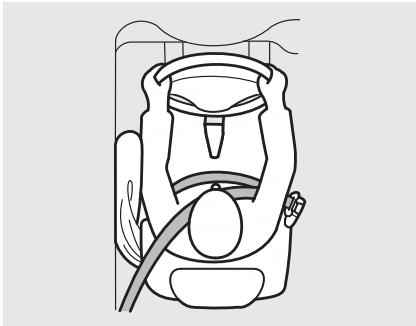

If you ever have a moderate to severe side impact, sensors will detect rapid acceleration and signal the control unit to instantly inflate either the driver's or the passenger's side airbag.

Only one airbag will deploy during a side impact. If the impact is on the passenger's side, the passenger's side airbag will deploy even if there is no passenger.

To get the best protection from the side airbags, front seat occupants should wear their seat belts and sit upright and well back in their seats.

***Side Airbag Cutoff System***
Your vehicle has a side airbag cutoff system designed primarily to protect a child riding in the front passenger's seat.

Although Acura does not encourage children to ride in front, if the position sensors detect a child has leaned into the side airbag's deployment path, the airbag will shut off.

The side airbag may also shut off if a short adult leans sideways, or a larger adult slouches and leans sideways into the airbag's deployment path.

Objects placed on the front passenger seat can also cause the side airbag to be shut off.

If the side airbag off indicator comes on (see page 35), have the passenger sit upright. Once the passenger is out of the airbag's deployment path, the system will turn the airbag back on, and the indicator will go out.

There will be some delay between the moment the passenger moves into or out of the airbag deployment path and when the indicator comes on or goes off.

A front seat passenger should not use a cushion or another object as a backrest. It may prevent the cutoff system from working properly.

## How Your Side Curtain Airbags Work

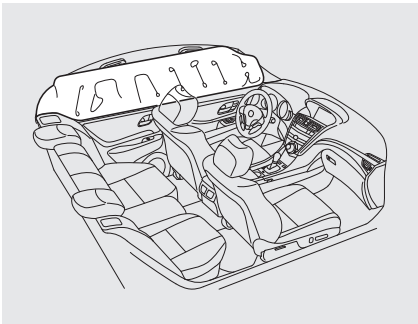

***In a Side Impact***
In a moderate to severe side impact, sensors will detect rapid acceleration and signal the control unit to instantly inflate the side curtain airbag.

If the impact is on the passenger's side, the passenger's side curtain airbag will inflate even if there are no occupants on that side of the vehicle.

*CONTINUED*

***In a Rollover***

If the SRS control unit senses that your vehicle is about to rollover, it immediately deploys both side curtain airbags and activates both front seat belt tensioners.

The airbag on the passenger's side will deploy, and the seat belt tensioner will activate, even if there are no passengers on that side of the vehicle.

To get the best protection from the side curtain airbags, occupants should wear their seat belts and sit upright and well back in their seats.

**How the SRS Indicator Works**

The SRS indicator alerts you to a potential problem with your airbag system components.

When you turn the ignition switch* to the ON (II) position, this indicator comes on briefly then goes off. This tells you the system is working properly.

*: Models equipped with the keyless access system have an engine start/stop button instead of an ignition switch. ON mode is the equivalent of ON (II). For more information, see pages 194 and 196.

If the indicator comes on at any other time, or does not come on at all, you should have the system checked by your dealer. For example:

- If the SRS indicator does not come on after you turn the ignition switch to the ON (II) position.
- If the indicator stays on after the engine starts.
- If the indicator comes on or flashes on and off while you drive.

You will also see a “CHECK AIRBAG SYSTEM” message on the multi-information display (see page 90).

If you see any of these indications, the airbag system components may not work properly when you need them.

**⚠ WARNING**

Ignoring the SRS indicator can result in serious injury or death if the airbag systems or tensioners do not work properly.

Have your vehicle checked by a dealer as soon as possible if the SRS indicator alerts you to a possible problem.

### How the Side Airbag Off Indicator Works

U.S. Canada

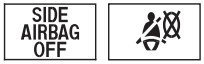


This indicator alerts you that the passenger's side airbag has been automatically shut off. It does ***not*** mean there is a problem with your side airbags.

When you turn the ignition switch to the ON (II) position, the indicator should come on briefly and then go out (see page 67). If it does not come on, stays on, or comes on while driving without a passenger in the front seat, you will also see a "PASSENGER SIDE AIRBAG OFF" message on the multi-information display. Have the system checked (see page 90).

Models equipped with the keyless access system have an engine start/stop button instead of an ignition switch. ON mode is the equivalent of ON (II). For more information, see pages 194 and 196.

### How the Passenger Airbag Off Indicator Works

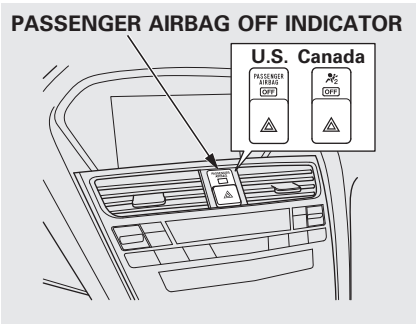


This indicator alerts you that the passenger's front airbag has been shut off because weight sensors detect about 65 lbs (29 kg) or less (the weight of an infant or small child) on the front passenger's seat. It does ***not mean*** there is a problem with the airbag.

Be aware that objects placed on the front seat can cause the indicator to come on.

If no weight is detected on the front seat, the airbag will be automatically shut off. However, the indicator will not come on.

The passenger airbag off indicator may come on and off repeatedly if the total weight on the seat is near the airbag cutoff threshold.

If an adult or teenage passenger is riding in front, move the seat as far to the rear as possible, and have the passenger sit upright and wear the seat belt properly.

If the indicator comes on with no front seat passenger and no objects on the seat, or with an adult riding there, something may be interfering with the weight sensors. Look for and remove:

- Any items under the front passenger's seat.
- Any object(s) hanging on the seat or in the seat-back pocket.
- Any object(s) touching the rear of the seat-back.

If no obstructions are found, have your vehicle checked by a dealer as soon as possible.

## Airbag Service

Your airbag systems are virtually maintenance free, and there are no parts you can safely service. However, you must have your vehicle serviced if:

- ***An airbag ever inflates.*** Any airbag that has deployed must be replaced along with the control unit and other related parts. Any seat belt tensioner that activates must also be replaced.

  Do not try to remove or replace any airbag by yourself. This must be done by an authorized dealer or a knowledgeable body shop.

- ***The SRS indicator alerts you to a problem.*** Take your vehicle to an authorized dealer as soon as possible. If you ignore this indication, your airbags may not operate properly.

- ***If your vehicle has a moderate to severe impact.*** Even if your airbags do not inflate, your dealer should inspect the driver's seat position sensor, the front passenger's weight sensors, the front seat belt tensioners, and all seat belts and their anchors worn during a crash to make sure they are operating properly.

## Additional Safety Precautions

- ***Do not attempt to deactivate your airbags.*** Together, airbags and seat belts provide the best protection.

- ***Do not tamper with airbag components or wiring for any reason.*** Tampering could cause the airbags to deploy, possibly causing very serious injury.

- ***Do not expose the front passenger's seat-back to liquid.*** If water or another liquid soaks into a seat-back, it can prevent the side airbag cutoff system from working properly.

*CONTINUED*

- ***Do not remove or modify a front seat without consulting your dealer.*** This could make the driver's seat position sensor or the front passenger's weight sensors ineffective. If it is necessary to remove or modify a front seat to accommodate a person with disabilities, first contact Acura Client Services at 800-382-2238.

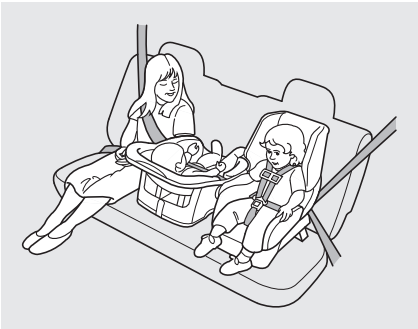

Children depend on adults to protect them. However, despite their best intentions, many adults do not know how to *properly* protect child passengers.

If you have children, or ever need to drive with a child in your vehicle, be sure to read this section. It begins with important general guidelines, then presents special information for infants, small children, and larger children.

**All Children Must Be Restrained**

Each year, many children are injured or killed in vehicle crashes because they are either unrestrained or not properly restrained. In fact, vehicle traffic accidents are the number one cause of the death of children age 12 and under.

To reduce the number of child deaths and injuries, every state, Canadian province and territory requires that infants and children be properly restrained when they ride in a vehicle.

***Infants and small children must be restrained in an approved child seat that is properly secured to the vehicle*** (see pages 44 – 53).

**⚠WARNING**

Children who are unrestrained or improperly restrained can be seriously injured or killed in a crash.

Any child too small for a seat belt should be properly restrained in a child seat. A larger child should be properly restrained with a seat belt and use a booster seat if necessary.

***Larger children must be restrained with a lap/shoulder belt and ride on a booster seat until the seat belt fits them properly*** (see pages 54 – 57).

**All Children Should Sit in a Back Seat**

According to statistics, children of all ages and sizes are safer when they are restrained in a back seat.

The National Highway Traffic Safety Administration and Transport Canada recommend that all children aged 12 and under be properly restrained in a back seat. Some states, Canadian provinces, and territories have laws restricting where children may ride.

Children who ride in the back are less likely to be injured by striking interior vehicle parts during a collision or hard braking. Also, children cannot be injured by an inflating front airbag when they ride in the back.

**The Passenger's Front Airbag Can Pose Serious Risks**

Front airbags have been designed to help protect adults in a moderate to severe frontal collision. To do this, the passenger's front airbag is quite large, and it can inflate with enough force to cause very serious injuries.

Even though your vehicle has an advanced front airbag system that automatically turns the passenger's front airbag off under certain circumstances (see page 36), please follow these guidelines:

***Infants***

***Never put a rear-facing child seat in the front seat of a vehicle equipped with a passenger's front airbag.*** If the airbag inflates, it can hit the back of the child seat with enough force to kill or very seriously injure an infant.

***Small Children***

***Placing a forward-facing child seat in the front seat of a vehicle equipped with a passenger's front airbag can be hazardous.*** If the vehicle seat is too far forward, or the child's head is thrown forward during a collision, an inflating front airbag can strike the child with enough force to kill or very seriously injure a small child.

***Larger Children***

***Children who have outgrown child seats are also at risk of being injured or killed by an inflating passenger's front airbag.*** Whenever possible, larger children should sit in the back seat, on a booster seat if needed, and be properly restrained with a seat belt. (See page 54 for important information about protecting larger children.)

To remind you of the passenger's front airbag hazards, and that children must be properly restrained in a back seat, your vehicle has warning labels on the dashboard (U.S. models) and on the front visors. Please read and follow the instructions on these labels.

### *U.S. Models*

**SUN VISORS**

**DASHBOARD**

### *Canadian Models*

**SUN VISORS**

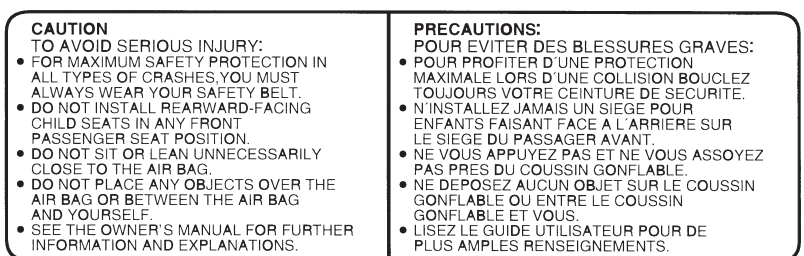

### If You Must Drive with Several Children

Your vehicle has a back seat where children can be properly restrained. If you ever have to carry a group of children, and a child must ride in front:

- Place the largest child in the front seat, provided the child is large enough to wear the lap/shoulder belt properly (see page 54).
- Move the vehicle seat as far to the rear as possible (see page 161).
- Have the child sit upright and well back in the seat (see page 18).
- Make sure the seat belt is properly positioned and secured (see page 16).

### If a Child Requires Close Attention

Many parents say they prefer to put an infant or a small child in the front passenger seat so they can watch the child, or because the child requires attention.

Placing a child in the front seat exposes the child to hazards in a frontal collision, and paying close attention to a child distracts the driver from the important tasks of driving, placing both of you at risk.

If a child requires close physical attention or frequent visual contact, we strongly recommend that another adult ride with the child in a back seat. The back seat is far safer for a child than the front.

### Additional Safety Precautions

- ***Never hold an infant or child on your lap.*** If you are not wearing a seat belt in a crash, you could be thrown forward and crush the child against the dashboard or a seat-back. If you are wearing a seat belt, the child can be torn from your arms and be seriously hurt or killed.
- ***Never put a seat belt over yourself and a child.*** During a crash, the belt could press deep into the child and cause serious or fatal injuries.
- ***Use the childproof door locks to prevent children from opening the rear doors.*** This can prevent children from accidentally falling out (see page 153).

- ***Make sure any unused seat belt that a child can reach is buckled, the lockable retractor is activated, and the belt is fully retracted and locked.*** If a child wraps a loose seat belt around their neck, they can be seriously or fatally injured. (See page 51 for how to activate and deactivate the lockable retractor.)
- ***Never let two children use the same seat belt.*** If they do, they could be very seriously injured in a crash.
- ***Do not leave children alone in a vehicle.*** Leaving children without adult supervision is illegal in most states, Canadian provinces/territories, and can be very hazardous. For example, infants and small children left in a vehicle on a hot day can die from heatstroke. A child left alone with the key in the ignition switch can accidentally set the vehicle in motion, possibly injuring themselves or others.
- ***Lock all doors and the tailgate when your vehicle is not in use.*** Children who play in vehicles can accidentally get trapped inside. Teach your children not to play in or around vehicles.
- ***Keep vehicle keys/remote transmitters or keyless access remotes out of the reach of children.*** Even very young children learn how to unlock vehicle doors, turn on the ignition switch*, and open the tailgate, which can lead to accidental injury or death.

*: Models equipped with the keyless access system have an engine start/stop button instead of an ignition switch. ON mode is the equivalent of ON (II). For more information, see pages 194 and 196.

## Protecting Infants

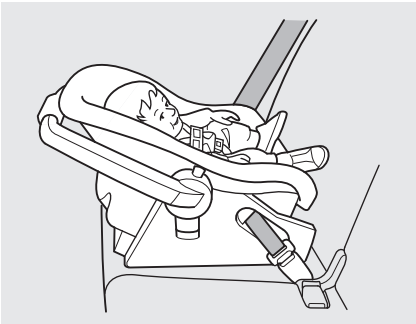

***Child Seat Type***
An infant must be properly restrained in a rear-facing, reclining child seat until the child reaches the seat maker's weight or height limit for the seat, and the child is at least one year old.

Only a rear-facing child seat provides proper support for a baby's head, neck, and back.

Two types of seats may be used: a seat designed exclusively for infants, or a convertible seat used in the rear-facing, reclining mode.

***Do not put a rear-facing child seat in a forward-facing position.*** If placed facing forward, an infant could be very seriously injured during a frontal collision.

***Rear-facing Child Seat Placement***
A rear-facing child seat can be placed in any seating position in the back seat, but not in the front. ***Never put a rear-facing child seat in the front seat.***

If the passenger's front airbag inflates, it can hit the back of the child seat with enough force to kill or seriously injure an infant.

When properly installed, a rear-facing child seat may prevent the driver or a front passenger from moving their seat as far back as recommended, or from locking their seat-back in the desired position.

It can also interfere with proper operation of the passenger's advanced front airbag system.

In any of these situations, we strongly recommend that you install the child seat directly behind the front passenger's seat, move the seat as far forward as needed, and leave it unoccupied. Or, you may wish to get a smaller rear-facing child seat.

**⚠ WARNING**

Placing a rear-facing child seat in the front seat can result in serious injury or death during a crash.

Always place a rear-facing child seat in the back seat, not the front.

## Protecting Small Children

### *Child Seat Type*

Many states, Canadian provinces and territories allow a child one year of age or older who also meets the minimum size and weight requirements to transition from a rear-facing child seat to a forward facing seat. Know the requirements where you are driving and follow the child seat instructions. Many experts recommend use of a rear-facing seat up to age two, if the child's height and weight are appropriate for a rear-facing seat.

Of the different seats available, we recommend those that have a five-point harness system as shown.

We also recommend that a small child use the child seat until the child reaches the weight or height limit for the seat.

*CONTINUED*

***Child Seat Placement***
We strongly recommend placing a forward-facing child seat in a back seat, not the front.

***Placing a forward-facing child seat in the front seat of a vehicle equipped with a passenger's airbag can be hazardous.*** If the vehicle seat is too far forward, or the child's head is thrown forward during a collision, an inflating airbag can strike the child with enough force to cause very serious or fatal injuries.

Even with advanced front airbags that automatically turn the passenger's front airbag off (see page 36), a back seat is the safest place for a small child.

If it is necessary to put a forward-facing child seat in the front, move the vehicle seat as far to the rear as possible, be sure the child seat is firmly secured to the vehicle and the child is properly strapped in the seat.

**⚠ WARNING**

Placing a forward-facing child seat in the front seat can result in serious injury or death if the front airbag inflates.

If you must place a forward-facing child seat in front, move the vehicle seat as far back as possible, and properly restrain the child.

When buying a child seat, you need to choose either a conventional child seat, or one designed for use with the Lower Anchors and Tethers for CHildren (LATCH) system.

Conventional child seats must be secured to a vehicle with a seat belt, whereas LATCH-compatible seats are secured by attaching the seat to hardware built into the two outer seating positions in the back seat.

Since LATCH-compatible child seats are easier to install and reduce the possibility of improper installation, we recommend selecting this style.

In seating positions and vehicles not equipped with LATCH, a LATCH-compatible child seat can be installed using a seat belt.

Whatever type of seat you choose, to provide proper protection, a child seat should meet three requirements:

1. ***The child seat should meet Federal Motor Vehicle Safety Standard 213 or Canadian Motor Vehicle Safety Standard 213.*** Look for FMVSS 213 or CMVSS 213 on the box.
2. ***The child seat should be of the proper type and size to fit the child.*** Rear-facing for infants, forward-facing for small children.
3. ***The child seat should fit the vehicle seating position (or positions) where it will be used.***

Before purchasing a conventional child seat, or using a previously purchased one, we recommend that you test the seat in the specific vehicle seating position or positions where the seat will be used.

# Installing a Child Seat

After selecting a proper child seat and a good place to install the seat, there are three main steps in installing the seat:

1. ***Properly secure the child seat to the vehicle.*** All child seats must be secured to the vehicle with the lap part of a lap/shoulder belt or with the LATCH (Lower Anchors and Tethers for CHildren) system. A child whose seat is not properly secured to the vehicle can be endangered in a crash.
2. ***Make sure the child seat is firmly secured.*** After installing a child seat, push and pull the seat forward and from side-to-side to verify that it is secure.

A child seat secured with a seat belt should be installed as firmly as possible. However, it does not need to be “rock solid.” Some side-to-side movement can be expected and should not reduce the child seat's effectiveness.

If the child seat is not secure, try installing it in a different seating position, or use a different style of child seat that can be firmly secured.

3. ***Secure the child in the child seat.*** Make sure the child is properly strapped in the child seat according to the child seat maker's instructions. A child who is not properly secured in a child seat can be seriously injured in a crash.

The following pages provide guidelines on how to properly install a child seat. A forward-facing child seat is used in all examples, but the instructions are the same for a rear-facing child seat.

### Installing a Child Seat with LATCH

Your vehicle is equipped with LATCH (Lower Anchors and Tethers for CHildren) at the outer rear seats.

The lower anchors are located between the seat-back and seat bottom, and are to be used only with a child seat designed for use with LATCH.

The location of each lower anchor is indicated by a small button above the anchor point.

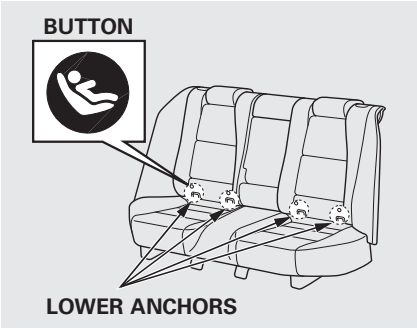


To install a LATCH-compatible child seat:

1. Move the seat belt buckle or tongue away from the lower anchors.
2. Make sure there are no objects near the anchors that could prevent a secure connection between the child seat and the anchors.

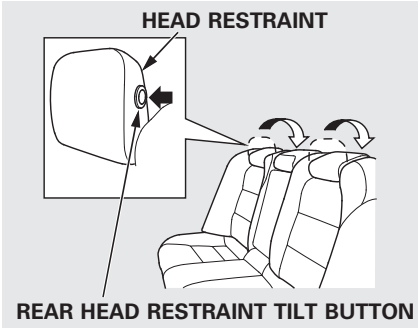


3. Push the rear head restraint tilt buttons on the head restraints to pivot the head restraints down.

*CONTINUED*

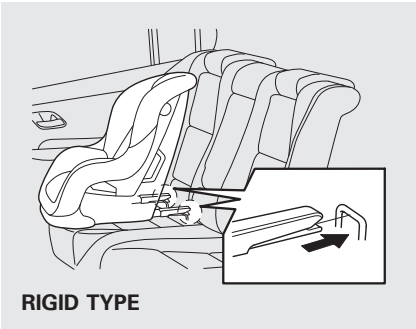
RIGID TYPE

4. Place the child seat on the vehicle seat, then attach the seat to the lower anchors according to the child seat maker's instructions.

   Some LATCH-compatible seats have a rigid-type connector as shown above.

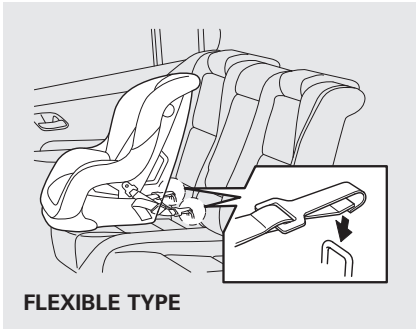
FLEXIBLE TYPE

   Other LATCH-compatible seats have a flexible-type connector as shown above.

5. Whatever type you have, follow the child seat maker's instructions for adjusting or tightening the fit.

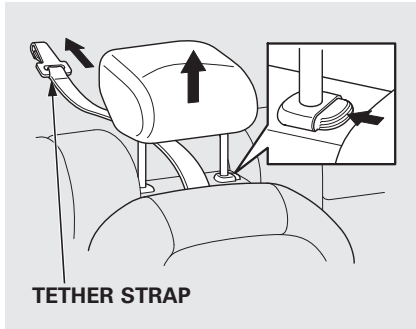
TETHER STRAP

6. Lift the head restraint (see page 162), then route the tether strap through the legs of the head restraint and over the seat-back, making sure the strap is not twisted.

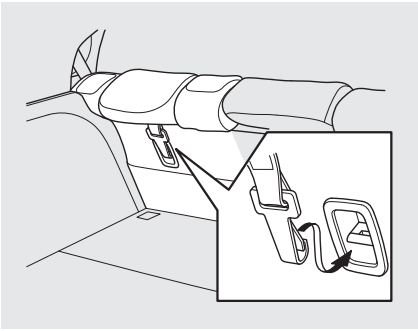

7. Attach the tether strap hook to the tether anchor, then tighten the strap as instructed by the child seat maker.
8. Lower the head restraint until it locks in place.
9. Push and pull the child seat forward and from side-to-side to verify that it is secure.

**Installing a Child Seat with a Lap/ Shoulder Belt**

When not using the LATCH system, all child seats must be secured to the vehicle with the lap part of a lap/ shoulder belt.

In addition, the lap/shoulder belts in all seating positions except the driver's have a lockable retractor that must be activated to secure a child seat.

1. With the child seat in the desired seating position, route the belt through the child seat according to the seat maker's instructions, then insert the latch plate into the buckle and remove any slack from the lap portion of the belt.

*CONTINUED*

2. To activate the lockable retractor, slowly pull the shoulder part of the belt all the way out until it stops, then let the belt feed back into the retractor.
3. After the belt has retracted, tug on it. If the belt is locked, you will not be able to pull it out. If you can pull the belt out, it is not locked, and you will need to repeat these steps.

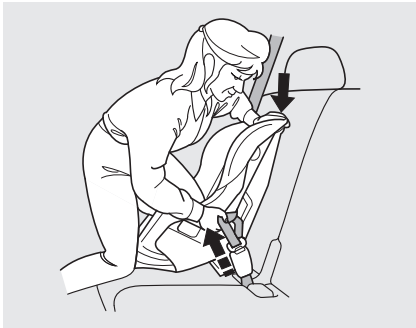

4. After confirming that the belt is locked, grab the shoulder part of the belt near the buckle, and pull up to remove any slack from the lap part of the belt. Remember, if the lap part of the belt is not tight, the child seat will not be secure.

   To remove slack, it may help to put weight on the child seat, or push on the back of the seat while pulling up on the belt.

5. Push and pull the child seat forward and from side-to-side to verify that it is secure enough to stay upright during normal driving maneuvers. If the child seat is not secure, unlatch the belt, allow it to retract fully, then repeat these steps.

To deactivate the lockable retractor and remove a child seat, unlatch the buckle, unroute the seat belt, and let the belt fully retract.

## Installing a Child Seat with a Tether

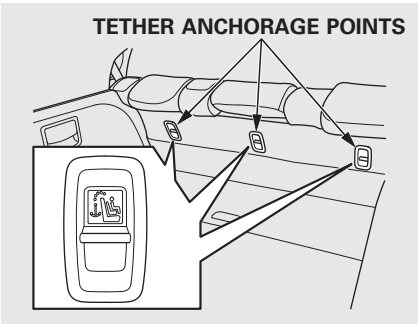


A child seat with a tether can be installed in any seating position in the back seat, using one of the anchorage points shown above.

Since a tether can provide additional security to the lap/shoulder belt installation, we recommend using a tether whenever one is required or available.

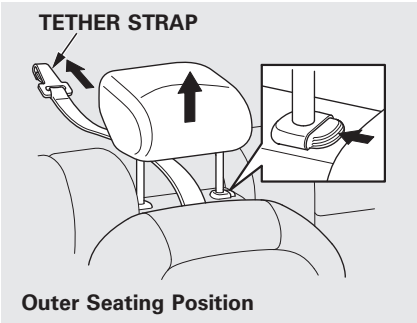


Outer Seating Position

1. After properly securing the child seat (see page 51), lift the head restraint, then route the tether strap over the seat-back and through the head restraint legs.

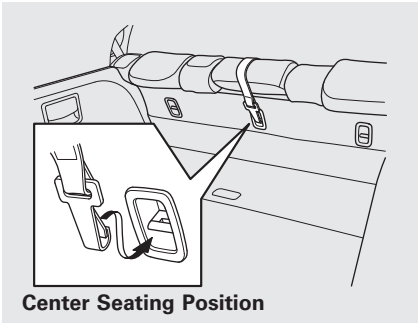

Center Seating Position

For the center seat, lower the head restraint, then route the tether strap over the head restraint and seat-back.

2. Attach the tether strap hook to the anchor, making sure the tether strap is not twisted.

   For the outer seat, lower the head restraint until it locks in place.

3. Tighten the strap according to the seat maker's instructions.

When a child reaches the recommended weight or height limit for a forward-facing child seat, the child should sit in a back seat on a booster seat and wear the lap/shoulder belt.

The following pages give instructions on how to check proper seat belt fit, what kind of booster seat to use if one is needed, and important precautions for a child who must sit in front.

**WARNING**

Allowing a child age 12 or under to sit in front can result in injury or death if the passenger's front airbag inflates.

If a child must ride in front, move the vehicle seat as far back as possible, use a booster seat if needed, have the child sit up properly and wear the seat belt properly.

## Checking Seat Belt Fit

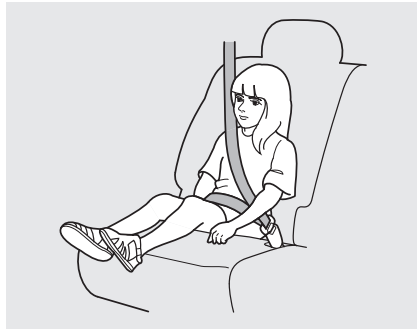

To determine if a lap/shoulder belt properly fits a child, have the child put on the seat belt, then ask yourself:

1. Does the child sit all the way back against the seat?
2. Do the child's knees bend comfortably over the edge of the seat?

3. Does the shoulder belt cross between the child's neck and arm?
4. Is the lap part of the belt as low as possible, touching the child's thighs?
5. Will the child be able to stay seated like this for the whole trip?

If you answer yes to all these questions, the child is ready to wear the lap/shoulder belt correctly. If you answer no to any question, the child needs to ride on a booster seat.

**Using a Booster Seat**

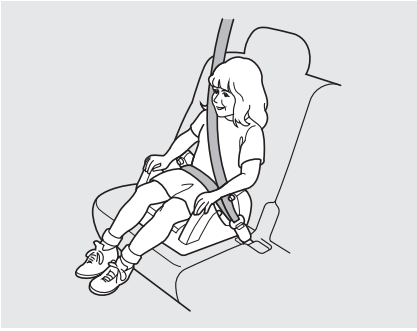

A child who has outgrown a forward-facing child seat should ride in a back seat and use a booster seat until the lap/shoulder belt fits them properly without the booster.

Some states, Canadian provinces and territories also require children to use a booster seat until they reach a given age or weight (e.g., 6 years or 60 lbs). Be sure to check current laws in the states, provinces and territories where you intend to drive.

Booster seats can be high-back or low-back. Whichever style you select, make sure the booster seat meets federal safety standards (see page 47) and that you follow the booster seat maker's instructions.

*CONTINUED*

If a child who uses a booster seat must ride in front, move the vehicle seat as far back as possible and be sure the child is wearing the seat belt properly.

A child may continue using a booster seat until the tops of their ears are even with the top of the vehicle's or booster's seat-back. A child of this height should be tall enough to use the lap/shoulder belt without a booster seat.

**When Can a Larger Child Sit in Front**

The National Highway Traffic Safety Administration and Transport Canada recommend that all children age 12 and under be properly restrained in a back seat.

If the passenger's front airbag inflates in a moderate to severe frontal collision, the airbag can cause serious injuries to a child who is unrestrained, improperly restrained, sitting too close to the airbag, or out of position.

A side airbag also poses risks. If any part of a larger child's body is in the path of a deploying side airbag, the child could receive possibly serious injuries.

Of course, children vary widely. And while age may be one indicator of when a child can safely ride in front, there are other important factors you should consider.

***Physical Size***

Physically, a child must be large enough for the lap/shoulder belt to properly fit (see pages 16 and 54). If the seat belt does not fit properly, with or without the child sitting on a booster seat, the child should not sit in front.

***Maturity***

To safely ride in front, a child must be able to follow the rules, including sitting properly, and wearing the seat belt properly throughout a ride.

If you decide that a child can safely ride up front, be sure to:

- Carefully read the owner's manual, and make sure you understand all seat belt instructions and all safety information.
- Move the vehicle seat to the rear-most position.
- Have the child sit up straight, back against the seat, and feet on or near the floor.
- Check that the child's seat belt is properly and securely positioned.
- Supervise the child. Even mature children sometimes need to be reminded to fasten the seat belts or sit properly.

**Additional Safety Precautions**

- ***Do not let a child wear a seat belt across the neck.*** This could result in serious neck injuries during a crash.
- ***Do not let a child put the shoulder part of a seat belt behind the back or under the arm.*** This could cause very serious injuries during a crash. It also increases the chance that the child will slide under the belt in a crash and be injured.
- ***Two children should never use the same seat belt.*** If they do, they could be very seriously injured in a crash.
- ***Do not put any accessories on a seat belt.*** Devices intended to improve a child's comfort or reposition the shoulder part of a seat belt can make the belt less effective and increase the chance of serious injury in a crash.

# Carbon Monoxide Hazard

Your vehicle's exhaust contains carbon monoxide gas. Carbon monoxide should not enter the vehicle in normal driving if you maintain your vehicle properly and follow the information on this page.

Have the exhaust system inspected for leaks whenever:

- The vehicle is raised for an oil change.
- You notice a change in the sound of the exhaust.
- The vehicle was in a collision that may have damaged the underside.

**⚠WARNING**

Carbon monoxide gas is toxic. Breathing it can cause unconsciousness and even kill you.

Avoid any enclosed areas or activities that expose you to carbon monoxide.

High levels of carbon monoxide can collect rapidly in enclosed areas, such as a garage. Do not run the engine with the garage door closed. Even with the door open, run the engine only long enough to move the vehicle out of the garage.

With the tailgate open, airflow can pull exhaust gas into your vehicle's interior and create a hazardous condition. If you must drive with the tailgate open, open all the windows, and set the climate control system as shown below.

If you must sit in your parked vehicle with the engine running, even in an unconfined area, adjust the climate control system as follows:

1. Select the fresh air mode.
2. Select the mode.
3. Turn the fan on high speed.
4. Set the temperature control to a comfortable setting.

These labels are in the locations shown. They warn you of potential hazards that could cause serious injury or death. Read these labels carefully.

If a label comes off or becomes hard to read (except for the U.S. dashboard label which may be removed by the owner), contact your dealer for a replacement.

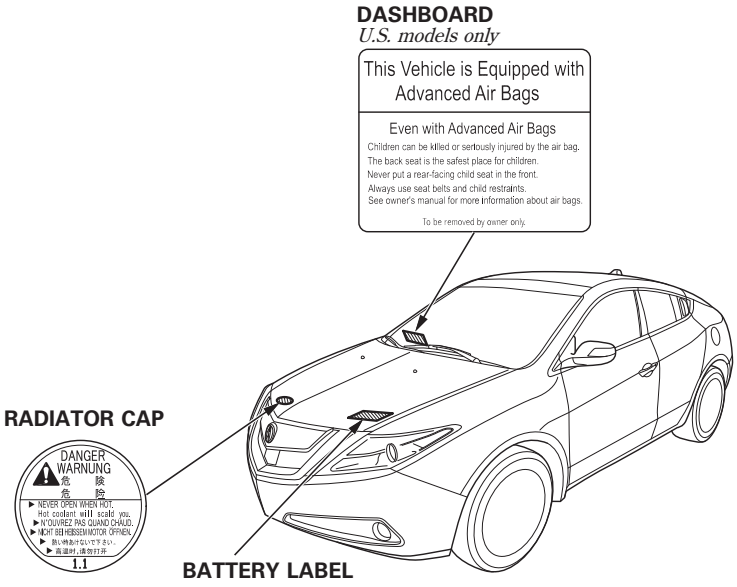


*CONTINUED*

## SUN VISOR

*U.S. models*

**⚠ WARNING**

EVEN WITH ADVANCED AIR BAGS

- Children can be killed or seriously injured by the air bag
- The back seat is the safest place for children
- Never put a rear-facing child seat in the front
- Always use seat belts and child restraints
- See owner's manual for more information about air bags

**AIR BAG WARNING**

*FLIP VISOR OVER*

*Canadian models*

**CAUTION:**
TO AVOID SERIOUS INJURY:
- FOR MAXIMUM SAFETY PROTECTION IN ALL TYPES OF CRASHES, YOU MUST ALWAYS WEAR YOUR SAFETY BELT.
- DO NOT INSTALL REARWARD-FACING CHILD SEATS IN ANY FRONT PASSENGER SEAT POSITION.
- DO NOT SIT OR LEAN UNNECESSARILY CLOSE TO THE AIR BAG.
- DO NOT PLACE ANY OBJECTS OVER THE AIR BAG OR BETWEEN THE AIR BAG AND YOURSELF.
- SEE THE OWNER'S MANUAL FOR FURTHER INFORMATION AND EXPLANATIONS.

**PRECAUTIONS:**
POUR EVITER DES BLESSURES GRAVES:
- POUR PROFITER D'UNE PROTECTION MAXIMALE LORS D'UNE COLLISION BOUCLEZ TOUJOURS VOTRE CEINTURE DE SECURITE.
- N'INSTALLEZ JAMAIS UN SIEGE POUR ENFANTS FAISANT FACE A L'ARRIERE SUR LE SIEGE DU PASSAGER AVANT.
- NE VOUS APPUYEZ PAS ET NE VOUS ASSOYEZ PAS PRES DU COUSSIN GONFLABLE.
- NE DEPOSEZ AUCUN OBJET SUR LE COUSSIN GONFLABLE OU ENTRE LE COUSSIN GONFLABLE ET VOUS.
- LISEZ LE GUIDE UTILISATEUR POUR DE PLUS AMPLES RENSEIGNEMENTS.

*U.S. models*

**⚠ WARNING:** HIGHER ROLLOVER RISK

Avoid Abrupt Maneuvers and Excessive Speed.

Always Buckle Up.

See Owner's Manual For Further Information.

## DOORJAMBS

*U.S. models*

**SIDE AIRBAG**

- This car is equipped with side airbags in the front seats and side curtain airbags.
- Do not lean against the door.
- See owner's manual for more information.

*Canadian models*

**SIDE AIRBAG**

- This car is equipped with side airbags in the front seats and side curtain airbags.
- Do not lean against the door.
- See owner's manual for more information.

**COUSSIN GONFLABLE LATERAL**

- Cette automobile est équipée de coussins gonflables latéraux dans les sièges avant ainsi que de coussins gonflables latéraux de type rideau.
- Ne vous appuyez pas sur la porte.
- Consultez le Manuel du propriétaire pour en savoir plus.

This section gives information about the controls and displays that contribute to the daily operation of your vehicle. All the essential controls are within easy reach.


Control Locations ..... 62
Instrument Panel ..... 63
Instrument Panel Indicators ..... 64
Gauges ..... 76
Multi-Information Display ..... 78
Controls Near the Steering Wheel ..... 136
Windshield Wipers and Washers ..... 137
Turn Signal and Headlights ..... 139
Hazard Warning Button ..... 143
Rear Window Defogger ..... 143
Instrument Panel Brightness ..... 144
Steering Wheel Adjustments ..... 145
Keys and Locks ..... 147
Immobilizer System ..... 149
Ignition Switch ..... 150
Door Locks ..... 151
Childproof Door Locks ..... 153
Tailgate ..... 153
Power Tailgate ..... 153
Remote Transmitter ..... 157
Seats ..... 161
Front Seat Heaters ..... 167
Front Seat Heaters and Seat Ventilation ..... 168
Rear Seat Heaters (Canadian models) ..... 170
Power Windows ..... 171
Panoramic Glass Roof ..... 174
Parking Brake ..... 176
Mirrors ..... 177
Driving Position Memory System ..... 180
Keyless Access System ..... 183
Interior Lights ..... 208
Interior Convenience Items ..... 212
Beverage Holders ..... 213
Console Compartment ..... 213
Under Floor Storage ..... 214
Storage Compartments ..... 214
Glove Box ..... 215
Sunglasses Holder ..... 215
Coat Hook ..... 216
Sun Visor ..... 216
Vanity Mirror ..... 217
Accessory Power Sockets ..... 217

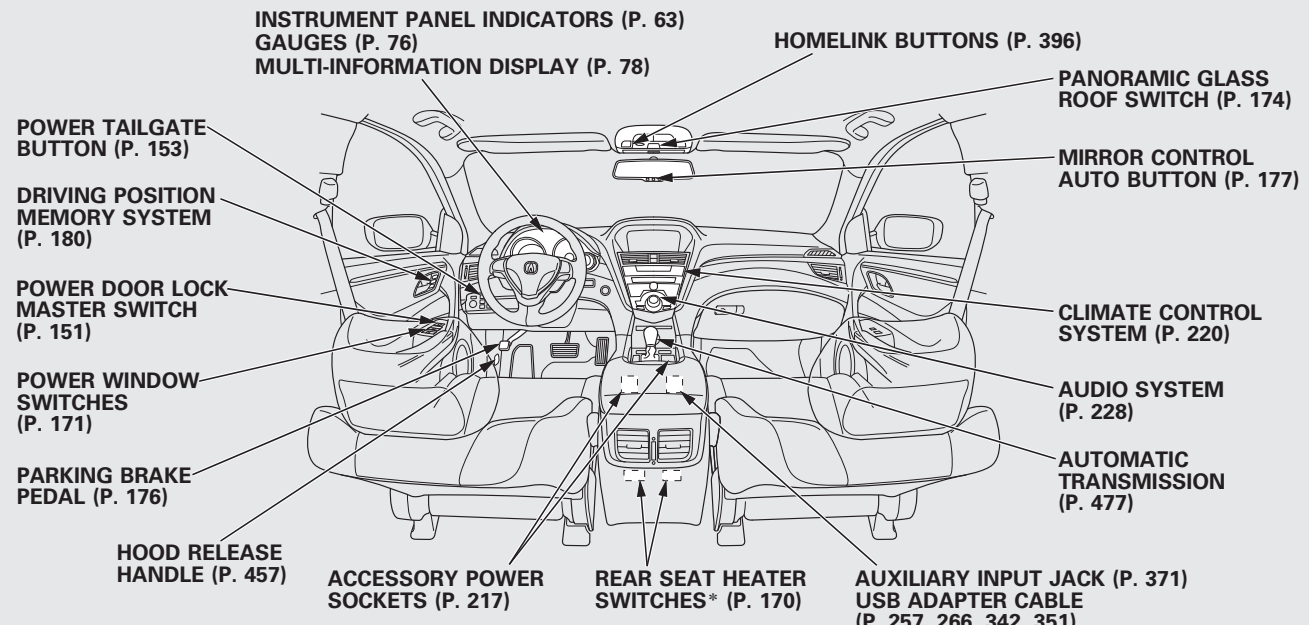


Vehicle with navigation system is shown.

*: If equipped

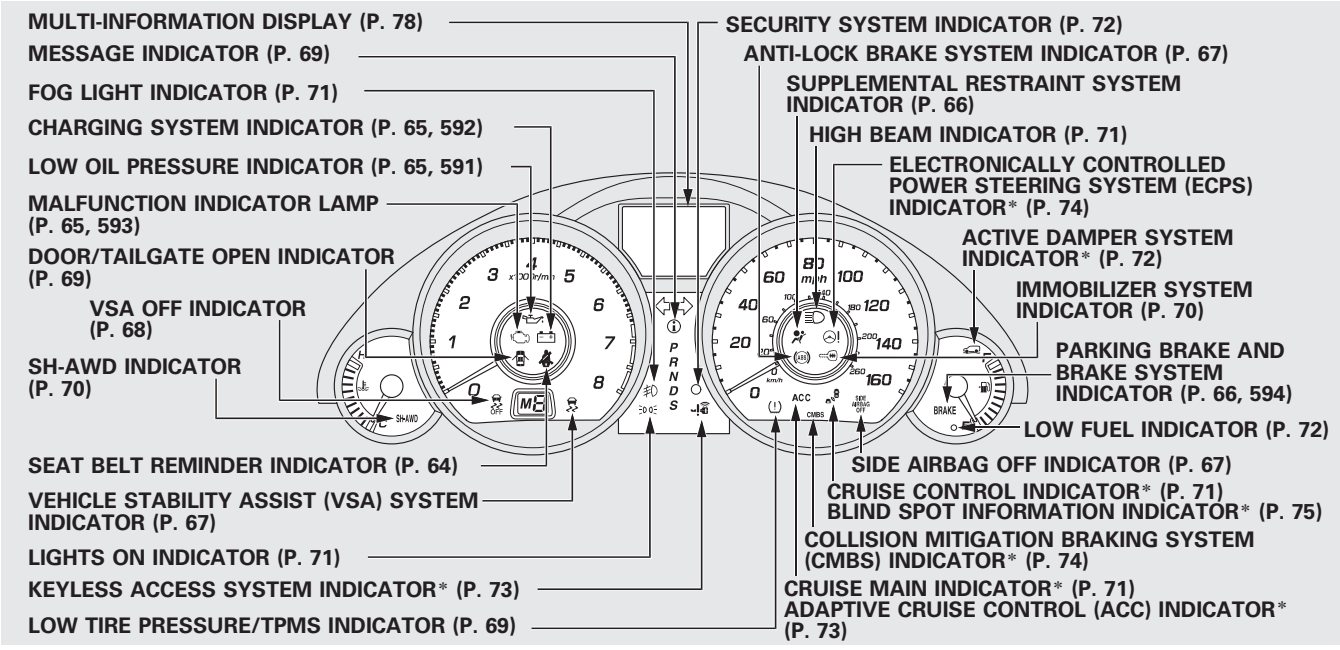


*: If equipped

The U.S. instrument panel is shown. Differences for the Canadian models are noted in the text.

The instrument panel has many indicators to give you important information about your vehicle.

### Seat Belt Reminder Indicator

This indicator comes on when you turn the ignition switch to the ON (II) position. It reminds you and your passengers to fasten your seat belts. A beeper also sounds if you have not fastened your seat belt.

If you turn the ignition switch to the ON (II) position before fastening your seat belts, the beeper sounds, and the indicator flashes. If you do not fasten your seat belts before the beeper stops, the indicator stops flashing but remains on.

If your front passenger does not fasten their seat belt, the indicator comes on about 6 seconds after the ignition switch is turned to the ON (II) position.

If either of you do not fasten your seat belt while driving, the beeper will sound and the indicator will flash again at regular intervals, and you will also see a “FASTEN SEAT BELT” or “FASTEN PASSENGER SEAT BELT” message on the multi-information display (see page 90).

For more information, see page 21.

Models equipped with the keyless access system have an engine start/stop button instead of an ignition switch. ON mode is the equivalent of ON (II). For more information, see pages 194 and 196.

### Low Oil Pressure Indicator

The engine can be severely damaged if this indicator flashes or stays on when the engine is running, or if a "CHECK ENGINE OIL LEVEL" message is on the multi-information display. For more information, see page 591.

### Charging System Indicator

This indicator has two functions:

1. If it comes on when the engine is running, the battery is not being charged, and you will see a "CHECK CHARGING SYSTEM" message on the multi-information display.
2. This indicator also comes on when the battery needs to be replaced along with "REPLACE BATTERY" message on the multi-information display. For more information, see page 592.

### Malfunction Indicator Lamp

You will see a "CHECK EMISSION SYSTEM" message on the multi-information display. For more information, see page 593.



*CONTINUED*

U.S. BRAKE Canada (!)

### Parking Brake and Brake System Indicator

This indicator has two functions:

1. It comes on when you turn the ignition switch to the ON (II) position. It is a reminder to check the parking brake. Driving with the parking brake not fully released can damage the rear brakes, axles, and tires.

   If you drive without releasing the parking brake, a beeper will sound, and you will also see a "RELEASE PARKING BRAKE" message on the multi-information display (see page 90).

2. If it stays on after you have fully released the parking brake while the engine is running, or if it comes on while driving, it can indicate a problem in the brake system. You will also see a "LOW BRAKE FLUID" or "CHECK BRAKE SYSTEM" message on the multi-information display (see pages 90). For more information, see page 594.

Models equipped with the keyless access system have an engine start/stop button instead of an ignition switch. ON mode is the equivalent of ON (II). For more information, see pages 194 and 196.

### Supplemental Restraint System Indicator

This indicator comes on briefly when you turn the ignition switch* to the ON (II) position. If it comes on at any other time, it indicates a potential problem with your front airbags. This indicator will also alert you to a potential problem with your airbag system components. You will also see a "CHECK AIRBAG SYSTEM" message on the multi-information display (see page 90). For more information, see page 34.

*: Models equipped with the keyless access system have an engine start/stop button instead of an ignition switch. ON mode is the equivalent of ON (II), and START mode is the equivalent of START (III). For more information, see pages 194 and 196.

U.S. Canada

SIDE AIRBAG OFF

### Side Airbag Off Indicator

This indicator comes on when you turn the ignition switch* to the ON (II) position. If it comes on at any other time, it indicates that the passenger's side airbag has automatically shut off. You will also see a “PASSENGER SIDE AIRBAG OFF” message on the multi-information display (see page 90). For more information, see page 35.

*: Models equipped with the keyless access system have an engine start/stop button instead of an ignition switch. ON mode is the equivalent of ON (II), and START mode is the equivalent of START (III). For more information, see pages 194 and 196.

### Anti-lock Brake System (ABS) Indicator

This indicator normally comes on for a few seconds when you turn the ignition switch* to the ON (II) position. It may also come on briefly when the ignition switch is turned to the START (III) position. If this indicator comes on at any other time, there is a problem in the ABS. If this happens, take the vehicle to your dealer to have it checked. With this indicator on, your vehicle still has normal braking ability but no anti-lock function. You will also see a “CHECK ABS SYSTEM” message on the multi-information display (see page 90). For more information, see page 496.

### Vehicle Stability Assist (VSA) System Indicator

This indicator normally comes on for a few seconds when you turn the ignition switch* to the ON (II) position. It may also come on briefly when the ignition switch is turned to the START (III) position.

This indicator has two functions:

1. It flashes when VSA is active (see page 508).

*CONTINUED*

2. If it comes on and stays on at any other time, there is a problem with the VSA or Hill Start Assist system. You will also see a “CHECK VSA SYSTEM” or “CHECK HILL START ASSIST SYSTEM” message on the multi-information display. Take your vehicle to a dealer to have it checked. Without VSA, your vehicle still has normal driving ability, but will not have VSA traction and stability enhancement. For more information, see page 508.

   If the VSA indicator illuminates, hill start assist will not be working. Without hill start assist, the vehicle will roll downhill immediately when you release the brake on an incline.

### VSA OFF Indicator

This indicator comes on as a reminder that you have turned off the vehicle stability assist (VSA) system.

It indicator normally comes on for a few seconds when you turn the ignition switch* to the ON (II) position. It may also come on briefly when the ignition switch is turned to the START (III) position. For more information, see page 508.

*: Models equipped with the keyless access system have an engine start/stop button instead of an ignition switch. ON mode is the equivalent of ON (II), and START mode is the equivalent of START (III). For more information, see pages 194 and 196.

### Turn Signal and Hazard Warning Indicators

The left or right turn signal indicator blinks when you signal a lane change or turn. If an indicator does not blink or blinks rapidly, it usually means one of the turn signal bulbs is burned out (see page 555 and 558). Replace the bulb as soon as possible, since other drivers cannot see that you are signaling.

When you press the hazard warning button, both turn signal indicators and all turn signals on the outside of the vehicle flash.

### Low Tire Pressure/ TPMS Indicator

This indicator normally comes on for a few seconds when you turn the ignition switch* to the ON (II) position.
This indicator has two functions:

1. If it comes on while driving, it indicates that one or more of your vehicle's tires are significantly low on pressure.

You will also see a “CHECK TIRE PRESSURE” message on the multi-information display (see page 91).

Check the tire pressure monitor on the multi-information display and determine the cause (see page 491).

If this happens, pull to the side of the road when it is safe, check which tire has lost pressure on the multi-information display, and determine the cause. If it is because of a flat tire, have the flat tire repaired as soon as possible. If two or more tires are underinflated, call a professional towing service. For more information, see page 602.

2. If this indicator begins to flash, there is a problem with the tire pressure monitoring system (TPMS). You will also see a “CHECK TPMS SYSTEM” message on the multi-information display. The indicator continues to flash for a while (approximately 1 minute), then stays on. If this happens, have your dealer check the system as soon as possible. For more information, see page 493.

### Message Indicator

This indicator comes on when there is a system message on the multi-information display. Press the INFO button on the steering wheel (see page 79) to see the message (see page 90).

Most of the time, this indicator comes on along with other indicators in the instrument panel such as the seat belt reminder indicator, SRS indicator, VSA system indicator, etc.

### Door/Tailgate Open Indicator

This indicator comes on red if any door or the tailgate is open.

You will also see a corresponding indicator(s) on the multi-information display to indicate which door and/or the tailgate is open (see page 12).

*CONTINUED*

### SH-AWD Super Handling-All Wheel Drive (SH-AWD) Indicator

This indicator normally comes on for a few seconds when you turn the ignition switch to the ON (II) position. If this indicator comes on at any other time, there is a problem in the SH-AWD system. You will also see a “CHECK SH-AWD SYSTEM” message on the multi-information display (see page 91). Take your vehicle to a dealer to have it checked. For more information, see page 487.

Models equipped with the keyless access system have an engine start/stop button instead of an ignition switch. ON mode is the equivalent of ON (II). For more information, see pages 194 and 196.

If the indicator blinks while driving, it indicates the differential temperature is too high.
You will also see a “SH-AWD DIFF TEMP. HIGH” message on the multi-information display (see page 91).

Pull to the side of the road when it is safe, shift to Park, and let the engine idle until the indicator goes out.

**NOTICE**

*Continuing to drive with the SH-AWD indicator blinking may cause serious damage to the system.*

### Immobilizer System Indicator

This indicator comes on briefly when you turn the ignition switch to the ON (II) position. It will then go off if you have inserted a properly coded ignition key, on models with keyless access system, if an appropriate keyless access remote is used. If it is not a properly coded key or a keyless access remote, the indicator will blink, and the engine's fuel system will be disabled (see page 149).

Models equipped with the keyless access system have an engine start/stop button instead of an ignition switch. ON mode is the equivalent of ON (II). For more information, see pages 194 and 196.

### Lights On Indicator

This indicator reminds you that the exterior lights are on. It comes on when the light switch is in either the ≣D or ≣D position. This indicator will also come on when the light switch is in AUTO and the lights turn on automatically. If you turn the ignition switch to the ACCESSORY (I) or the LOCK (0) position without turning off the light switch, this indicator will remain on. A reminder chime will also sound when you open the driver's door.

Models equipped with the keyless access system have an engine start/stop button instead of an ignition switch. VEHICLE OFF (LOCK) mode is the equivalent of LOCK (0) and ACCESSORY mode is the equivalent of ACCESSORY (I). For more information, see pages 194 and 196.

### Fog Light Indicator

This indicator comes on when you turn on the fog lights. For more information, see page 141.

### High Beam Indicator

This indicator comes on with the high beam headlights. For more information, see page 139.

### Cruise Main Indicator

*On models without adaptive cruise control (ACC)*
This indicator comes on when you turn on the cruise control system by pressing the CRUISE button on the steering wheel (see page 379).

### Cruise Control Indicator

*On models without adaptive cruise control (ACC)*
This indicator comes on when you set the cruise control. See page 379 for information on operating the cruise control.

*CONTINUED*

### Active Damper System Indicator

*On models with active damper system*

This indicator normally comes on for a few seconds when you select the ON mode by operating the engine start/stop button (see page 194). If this indicator comes on at any other time, there is a problem in the system. In this case, your vehicle still has the normal damper function, but it will not have the active damper function. You will also see a "CHECK ADS SYSTEM" message on the multi-information display. Have the vehicle checked by your dealer as soon as possible. For more information, see page 521.

### Low Fuel Indicator

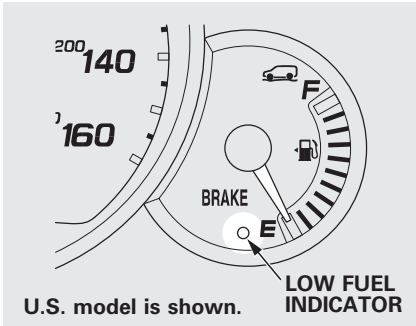

U.S. model is shown.

This indicator is in the fuel gauge. It comes on as a reminder that you must refuel soon. You will also see a "LOW FUEL" message on the multi-information display (see page 91).

When the indicator comes on, there are about 2.9 U.S. gal (10.8 L) of fuel remaining in the tank.

When the needle reaches E, there is a very small amount of fuel in the tank.

### Security System Indicator

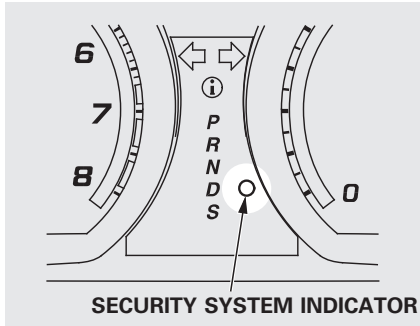


This indicator comes on when the security system is set. See page 378 for more information on the security system.

### ACC Adaptive Cruise Control (ACC) Indicator (Amber)

*On models with adaptive cruise control (ACC)*

This indicator normally comes on for a few seconds when you select the ON mode by operating the engine start/stop button (see page 194).

When you push the MAIN button on the steering wheel, this indicator comes on green. You will also see "ACC" on the multi-information display.

If the indicator comes on orange, there is a problem with the ACC system. You will also see a "CHECK ACC SYSTEM" message on the multi-information display (see page 92). Take your vehicle to your dealer to have it checked. For more information, see page 382.

### Keyless Access System Indicator

*On models with keyless access system*

This indicator normally comes on for a few seconds when you select the ON mode by operating the engine start/stop button (see page 194). If it comes on at any other time, it indicates that there is a problem with the system.

This indicator has two functions:

1. If this indicator comes on along with a "CHECK KEYLESS ACCESS SYSTEM" message on the multi-information display, there is a problem with the keyless access system. Have the vehicle checked by your dealer as soon as possible. For more information, see page 204.
2. If this indicator comes on along with a "CHECK KEYLESS STARTING SYSTEM" message on the multi-information display, there is a problem with the keyless starting system. In this case, your vehicle may not restart. If you can continue to drive safely, take the vehicle to your dealer and have it checked as soon as possible. For more information, see page 204.



*CONTINUED*

### Electronically Controlled Power Steering System (ECPS) Indicator

*On models with electronically controlled power steering system (ECPS)*

This indicator normally comes on when you select the ON mode by operating the engine start/stop button (see page 194) and goes off after the engine starts. If it comes on at any other time, there is a problem with the power steering system. You will also see a “CHECK POWER STEERING SYSTEM” message on the multi-information display (see page 91).

If this happens, stop the vehicle in a safe place, and turn off the engine. Reset the system by restarting the engine, and watch this indicator. If it does not go off or comes back on again while driving, take the vehicle to your dealer to have it checked. With the indicator on, the ECPS is turned off, which could make the steering feel different.

### Collision Mitigation Braking System™ (CMBS™) Indicator

*On models with collision mitigation braking system™ (CMBS™)*

This indicator normally comes on for a few seconds when you select the ON mode by operating the engine start/stop button (see page 194). It also comes on as a reminder that you have turned off the collision mitigation braking system™ (CMBS™).

The CMBS indicator also comes on if dirt or other debris blocks the radar sensor in the front grille. You will also see a “CHECK CMBS RADAR SENSOR” message on the multi-information display. When you clean the radar sensor, the indicator should go off the next time you select the ON mode by operating the engine start/stop button.

If the indicator comes on at any other time, there is a problem with the CMBS. You will also see a “CHECK CMBS SYSTEM” message on the multi-information display. If this happens, take your vehicle to a dealer, and have it checked. For more information, see page 498.
When this indicator is on, the CMBS is not working.

### Blind Spot Information System (BSI) Indicator

*On models with blind spot information system (BSI)*
This indicator normally comes on for a few seconds when you select the ON mode by operating the engine start/stop button (see page 194).

The BSI indicator also comes on if the rear bumper becomes dirty while driving. You will see a “BLIND SPOT NOT AVAILABLE” message on the multi-information display.
When you clean the rear bumper, the indicator should go off after you begin driving again.

When you turn the system on, the indicator will turn off.

If the indicator comes on at any other time, there is a problem with BSI. You will also see a “CHECK BLIND SPOT SYSTEM” message on the multi-information display. If this happens, take your vehicle to a dealer, and have it checked (for more information, see page 518).
When this indicator is on, BSI is not working.

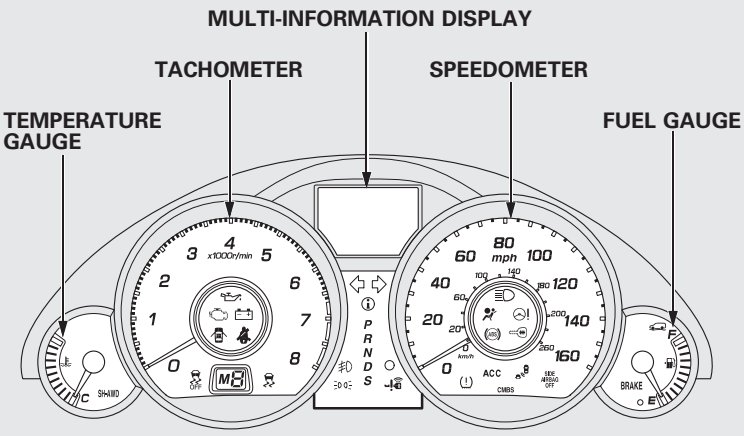


U.S. model is shown.

## Fuel Gauge

This shows how much fuel you have. It may show slightly more or less than the actual amount.

The needle returns to the bottom after you turn off the ignition/power mode.

**NOTICE**

*Avoid driving with an extremely low fuel level. Running out of fuel could cause the engine to misfire, damaging the catalytic converter.*

**Temperature Gauge**
This shows the temperature of the engine's coolant. During normal operation, the pointer should rise from the bottom mark to about the middle of the gauge. In severe driving conditions, such as very hot weather or a long period of uphill driving, the pointer may rise to the upper zone. If it reaches the red (hot) mark, pull safely to the side of the road. For instructions and precautions on checking the engine's cooling system, see page 589.

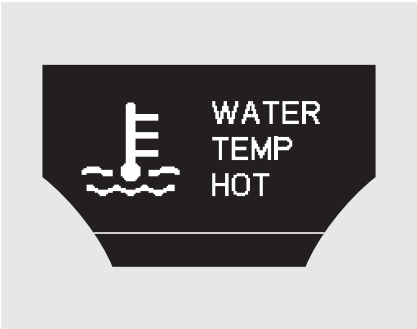


If the pointer of the temperature gauge reaches to or above the red mark, you will also see the “WATER TEMP HOT” message on the multi-information display. This will alert you that the engine should be cooled down.

The multi-information display in the instrument panel displays various information and messages when the ignition switch is in the ON (II) position. Some of the messages help you operate your vehicle more comfortably. Others help to keep you aware of the periodic maintenance your vehicle needs for continued trouble-free driving.

Models equipped with the keyless access system have an engine start/stop button instead of an ignition switch. ON mode is the equivalent of ON (II). See page 196 for ignition switch and power mode comparison.

There are three types of messages: normal display messages, engine oil life and maintenance messages, and system messages.

You can select the displayed language and also customize some vehicle control settings to your liking with the multi-information display and the buttons on the steering wheel (see page 79).

## Normal Display Messages

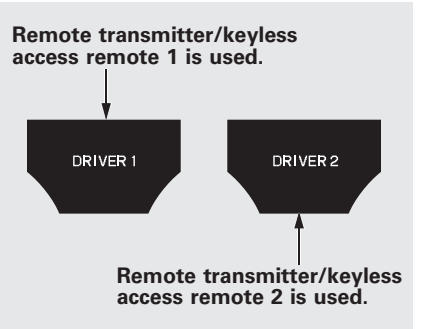


When you turn the ignition switch to the ON (II) position, the display shows “DRIVER 1” or “DRIVER 2” depending on which remote transmitter/keyless access remote you use.

*On models with keyless access system*
The driver's ID (1 or 2) is displayed when the power mode is set to ON.

If you do not fasten your seat belt, you will also see a “FASTEN SEAT BELT” message on the multi-information display when you turn the ignition switch to the ON (II) position.

These messages go off in several seconds after the key is inserted into the ignition switch.

*On models with keyless access system*
These messages go off in several seconds.

Models equipped with the keyless access system have an engine start/stop button instead of an ignition switch. ON mode is the equivalent of ON (II). See page 196 for ignition switch and power mode comparison.

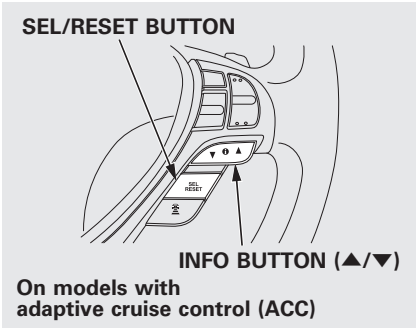


**On models with adaptive cruise control (ACC)**

With the ignition switch in the ON (II) position, the multi-information display changes as shown on page 81 each time you press the INFO (▲/▼) button or the SEL/RESET button.

When you turn the ignition switch to the ON (II) position, your last selection is displayed.

*CONTINUED*

In the multi-information display, the system message is also displayed (see page 81) and you can customize your vehicle control settings (see page 94).

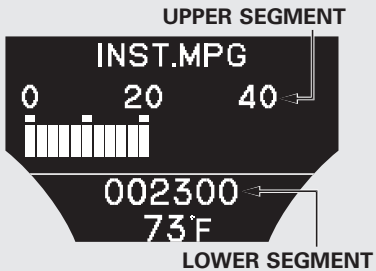


U.S. model is shown.

The multi-information display consists of an upper segment and a lower segment.

In the normal display mode, the upper segment displays trip computer information, such as fuel economy or average speed. The lower segment displays the odometer/trip meter (A/B), outside temperature, and engine oil life and maintenance item code(s).

*On models with keyless access system*

You will see some keyless access system messages until you select the ON mode by operating the engine start/stop button. These messages can be customized (see page 113).

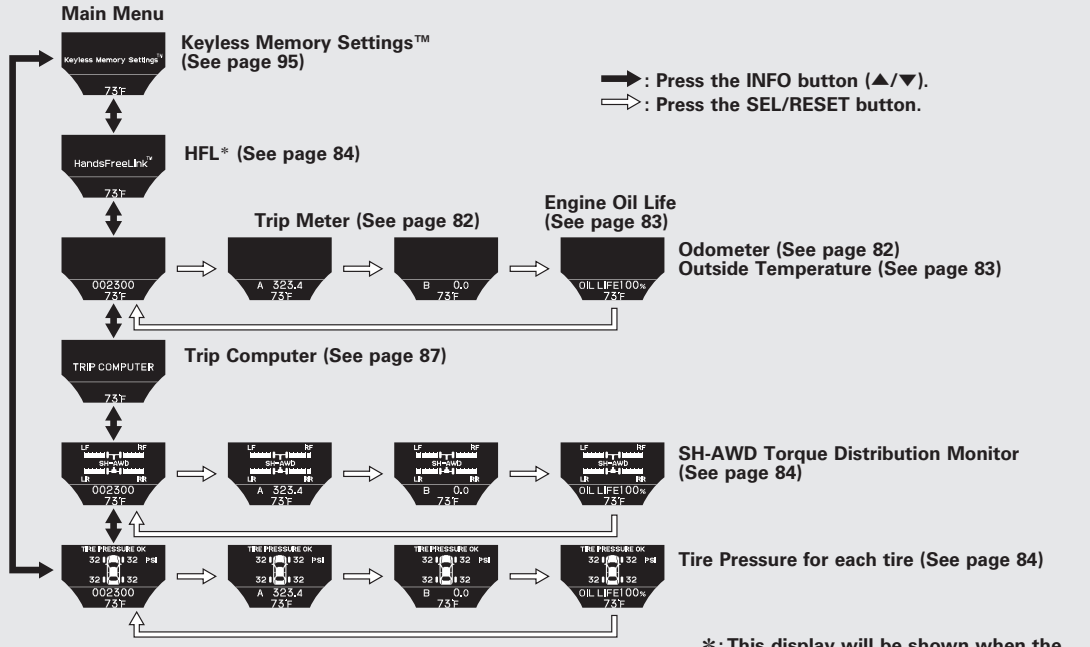


U.S. model is shown.

CONTINUED

## Odometer

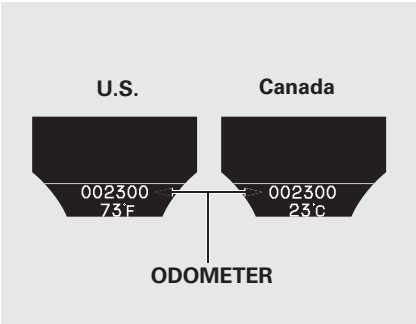


The odometer shows the total distance your vehicle has been driven. It measures miles in U.S. models and kilometers in Canadian models. It is illegal under U.S. federal law and Canadian provincial and territorial regulations to disconnect, reset, or alter the odometer with the intent to change the number of miles or kilometers indicated.

## Trip Meter

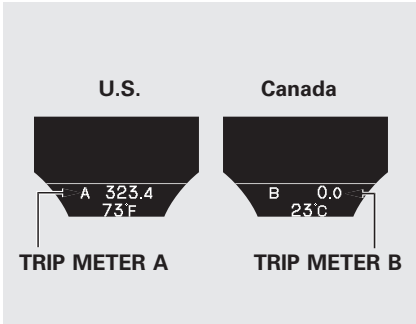


This meter shows the number of miles (U.S.) or kilometers (Canada) driven since you last reset it. There are two trip meters: Trip A and Trip B. Each trip meter works independently, so you can keep track of two different distances.

To reset a trip meter, display it, and then press and hold the SEL/RESET button until the number resets to “0.0.”

When you reset Trip A, average fuel economy A, average vehicle speed A, and elapsed time A are reset at the same time. When you reset Trip B, average fuel economy B, average vehicle speed B, and elapsed time B are reset.

In the customizing mode, you can set Trip A information: Trip A, average fuel economy A, average vehicle speed A, and elapsed time A to reset at the same time when you refuel your vehicle (see page 87).

## Outside Temperature

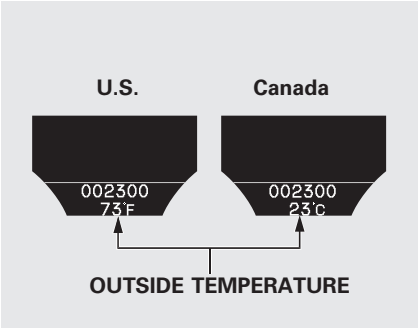


This shows the outside Fahrenheit temperature in U.S. models, and Celsius temperature in Canadian models.

The temperature sensor is in the front bumper. The temperature reading can be affected by heat reflection from the road surface, engine heat, and the exhaust from surrounding traffic. This can cause an incorrect temperature reading when your vehicle speed is under 19 mph (30 km/h). When you start your trip, the sensor is not fully acclimatized, therefore it may take several minutes until the proper temperature is displayed.

In certain weather conditions, temperature readings near freezing (32°F, 0°C) could mean that ice is forming on the road surface.

You can adjust the outside temperature display (see page 108).

## Engine Oil Life

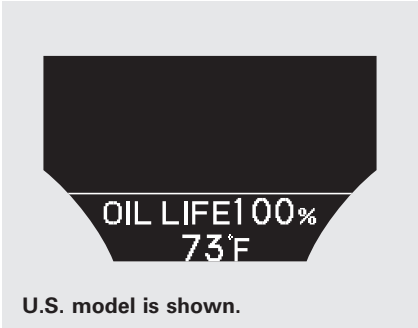


U.S. model is shown.

This shows the remaining life of the engine oil. It shows 100% after the engine oil is replaced and the display is reset. The engine oil life is calculated based on engine operating conditions and accumulated engine revolutions. For more information, see page 533.

*CONTINUED*

## SH-AWD Torque Distribution Monitor

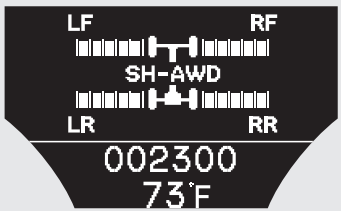


U.S. model is shown.

This monitor shows how much torque is being delivered to each wheel. For more information, see page 487.

## Tire Pressure Monitor

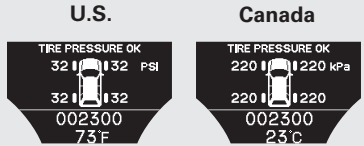


You can see the pressure of each tire in this monitor. If one or more tires are low, inflate them to the correct pressure. For more information, see page 490.

## *Bluetooth*® HandsFreeLink®

U.S. model is shown.

You can receive or make phone calls from your cell phone through your vehicle's *Bluetooth*® HandsFreeLink® (HFL) system without touching your cell phone.

To use the system, your cell phone and the HFL system must be linked. Not all cell phones are compatible with this system. Refer to page 399 or 416 for instructions on how to link your cell phone to the HFL and how to receive or make phone calls, or visit the *acura.com/handsfreelink* website. In Canada, visit *www.acura.ca,* or call 1-888-9-ACURA-9.

*On models with navigation system*
You can see HFL information on the navigation screen (see page 418).

**Battery Charge Low**
When the battery's state of charge is low, the vehicle's battery management system triggers one of the following "BATTERY CHARGE LOW" messages if the ignition is on or off.

Depending on how low the battery's state of charge dropped and how long it remained low, these messages may occur frequently. It may take a number of trips to sufficiently recharge the battery and the messages to no longer appear.

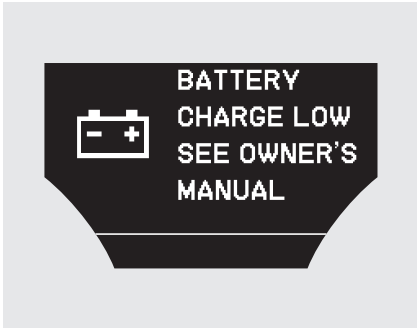


IGN ON (II) – Immediately turn off all electrical devices (interior lights, air conditioning, audio, heated seats, etc.). Try not to operate other electrically operated controls such as the power windows. Driving the vehicle will recharge the battery. If the message continues to display while driving, see your dealer.

*CONTINUED*

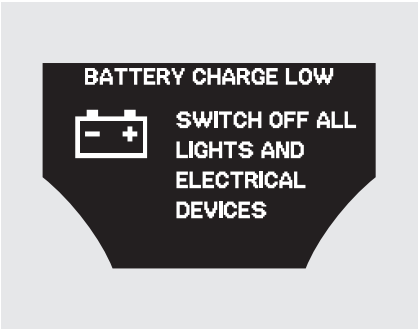


IGN ACCESSORY (I) or LOCK (0) – Follow the multi-information display message and turn off all electrical devices. Driving the vehicle will recharge the battery, however the vehicle may not start. If no start, see jump starting (page 587), or contact your dealer.

Models equipped with the keyless access system have an engine start/stop button instead of an ignition switch (IGN). ON mode is the equivalent of ON (II). See page 196 for ignition switch and power mode comparison.

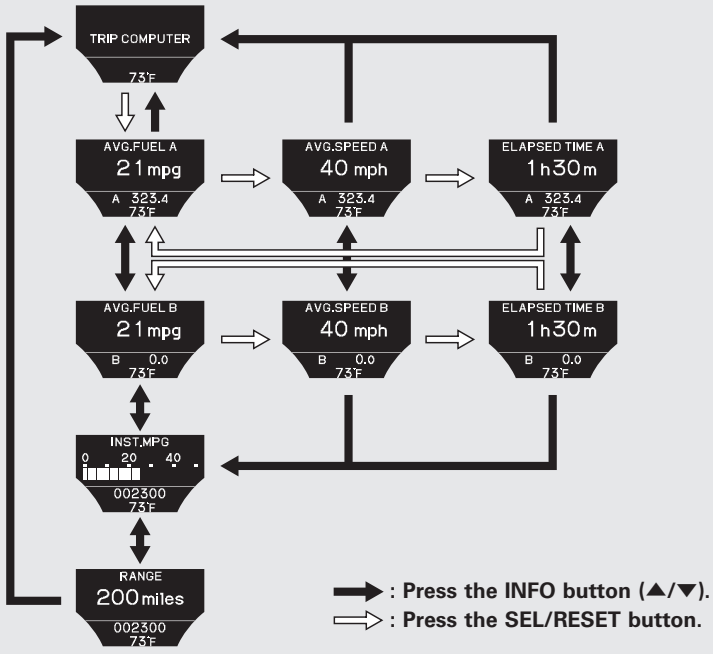


U.S. model is shown.

## Trip Computer

Along with the trip meter, the trip computer calculates these values:

- Average Fuel Economy
- Average Vehicle Speed
- Elapsed Time
- Instant Fuel Economy
- Range

You can customize the Trip A information (Trip A, average fuel economy A, average vehicle speed A, and elapsed time A) reset condition in the multi-information display (see page 109).

### *AVG. FUEL A/B*

This shows your vehicle's average fuel economy in mpg (U.S. models) or liter/100 km (Canadian models) since you last reset Trip A or Trip B.

*CONTINUED*

***INST. MPG (U.S. models)/INST. L/100 km (Canadian models)***
This shows your instant fuel economy.

***RANGE***
This shows the estimated distance you can travel on the fuel remaining in the fuel tank. This distance is estimated from the fuel economy you received over the last several miles (U.S.) or kilometers (Canada), so it will vary with changes in speed, traffic, etc.

***AVG. SPEED A/B***
This shows the average speed you are traveling in miles per hour (mph) for U.S. models or kilometers per hour (km/h) for Canadian models.

***ELAPSED TIME A/B***
This shows the time passed traveled since you last reset it. When you turn the ignition switch to the ON (II) position, ELAPSED TIME A or B is reset.

Models equipped with the keyless access system have an engine start/stop button instead of an ignition switch. ON mode is the equivalent of ON (II). See page 196 for ignition switch and power mode comparison.

## System Messages

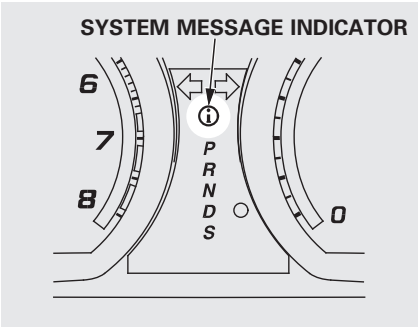


If there is a problem with your vehicle, for example, the engine oil level is low or a door is not fully closed, the multi-information display will show you the problem. It does this by interrupting the current display with one or more messages.

The system message(s) triggers the appropriate indicator(s) on the instrument panel, including the system message indicator, to come on. The system message indicator does not go off until the problem(s) is corrected.

You will also hear a beep when the system message comes on for the first time.

Most of the messages are displayed for about 5 seconds, and then the normal display returns. If there are several system messages to be shown, the display switches these messages every 5 seconds.

To switch the message(s) before 5 seconds have elapsed, press the INFO (▲/▼) button on the steering wheel.

Even if you press the INFO (▲/▼) button, some messages stay on or come on again at regular intervals until the problem is corrected.

If the system message indicator remains lit on the instrument panel, you can see the corresponding message(s) again by pressing the INFO (▲/▼) button repeatedly.

Here is a list of all messages:

*CONTINUED*

| | |
|---|---|
| DOOR & TAILGATE OPEN | See page 12 |
| FASTEN SEAT BELT | See page 21 |
| FASTEN PASSENGER SEAT BELT | See page 21 |
| CHECK AIRBAG SYSTEM | See page 34 |
| U.S. PASSENGER SIDE AIRBAG OFF<br>Canada PASSENGER SIDE AIRBAG OFF | See page 35 |

| | |
|---|---|
| U.S. RELEASE PARKING BRAKE<br>Canada RELEASE PARKING BRAKE | See page 176 |
| U.S. LOW BRAKE FLUID<br>Canada LOW BRAKE FLUID | See page 594 |
| U.S. CHECK BRAKE SYSTEM<br>Canada CHECK BRAKE SYSTEM | See page 594 |

| | |
|---|---|
| CHECK CHARGING SYSTEM | See page 592 |
| CHECK EMISSION SYSTEM | See page 593 |
| CHECK ENGINE OIL LEVEL | See page 591 |
| CHECK ABS SYSTEM | See page 496 |
| CHECK VSA SYSTEM | See page 508 |
| WATER TEMP HOT | See page 77 |

| | |
|---|---|
| CHECK TIRE PRESSURE | See page 491 |
| TPMS CHECK TPMS SYSTEM | See page 493 |
| CHECK HILL START ASSIST SYSTEM | See page 510 |
| CHECK POWER STEERING SYSTEM<br>On models with Integrated Dynamics System (IDS) | See page 521 |
| U.S.<br>TAIL GATE CHECK POWER TAILGATE<br>Canada<br>CHECK POWER TAILGATE | See page 156 |

| | |
|---|---|
| SH-AWD CHECK SH-AWD SYSTEM | See page 488 |
| SH-AWD SH-AWD DIFF TEMP. HIGH | See page 488 |
| CHECK TRANSMISSION | See page 477 |
| CHECK ADS SYSTEM<br>On models with Integrated Dynamics System (IDS) | See page 521 |
| LOW WASHER FLUID | See page 550 |
| LOW FUEL | See page 72 |

| | |
|---|---|
| CHECK STARTING SYSTEM | See page 474, 476 |
| DRL CHECK DRL SYSTEM | See page 141 |
| DRL DRL OFF | |
| SERVICE DUE SOON A123456 | See page 534 |
| TIGHTEN FUEL CAP | See page 456 |
| REMOVE KEY<br>On models without keyless access system | See page 150 |

*CONTINUED*

| | |
|---|---|
| ACC CHECK ACC SYSTEM<br>On models with adaptive cruise control (ACC) | See page 393 |
| CMBS CHECK CMBS RADAR SENSOR<br>On models with collision mitigation braking system (CMBS) | See page 499 |
| CMBS CHECK CMBS SYSTEM<br>On models with collision mitigation braking system (CMBS) | See page 503 |
| BATTERY CHARGE LOW SEE OWNER'S MANUAL | See page 85 |
| BATTERY CHARGE LOW<br>SWITCH OFF ALL LIGHTS AND ELECTRICAL DEVICES | See page 85 |

| | |
|---|---|
| REPLACE BATTERY | See page 592 |
| CHECK BATTERY SENSOR | See page 573 |
| CHECK BLIND SPOT SYSTEM<br>On models with blind spot information system (BSI) | See page 518 |
| BLIND SPOT NOT AVAILABLE<br>On models with blind spot information system (BSI) | See page 518 |

*On models with keyless access system*

| | |
|---|---|
| CHECK KEYLESS ACCESS SYSTEM | See page 204 |
| CHECK KEYLESS STARTING SYSTEM | See page 204 |
| KEYLESS REMOTE NOT DETECTED | See page 201 |
| CHANGE KEYLESS REMOTE BATTERY | See page 202 |
| INSERT KEYLESS REMOTE INTO SLOT | See page 206 |

| | |
|---|---|
| REMOVE KEYLESS REMOTE FROM SLOT | See page 206 |
| TO START ENGINE: BRAKE + PUSH | See page 197 |
| SHIFT TO PARK | See page 199 |
| TO UNLOCK WHEEL: ROTATE + PUSH | See page 198 |
| TO TURN ACCESSORY ON: PUSH | See page 197 |
| TO TURN VEHICLE OFF: PUSH TWICE | See page 199 |

| | |
|---|---|
| ACCESSORY MODE | See page 199 |
| TO UNLOCK KEYLESS REMOTE TURN OFF POWER | See page 200 |



*CONTINUED*

**Customize Settings**
You can customize some vehicle control settings.
To change the settings, the ignition switch must be in the ON (II) position, and the vehicle must be stopped with the transmission in Park.

If you turn the ignition switch to the ACCESSORY (I) or the LOCK (0) position, or move the shift lever out of Park, the display will change to the normal screen.

Models equipped with the keyless access system have an engine start/stop button instead of an ignition switch. VEHICLE OFF (LOCK) mode is the equivalent of LOCK (0), ACCESSORY mode is the equivalent of ACCESSORY (I), and ON mode is the equivalent of ON (II).
For more information, see pages 194 and 196.

You can customize some vehicle control settings for “DRIVER 1” and “DRIVER 2” separately. If “DRIVER 1” or “DRIVER 2” is not displayed, customizing is not possible.

To have the driver's ID detected, make sure your remote transmitter/keyless access remote is linked to the system and the driver's door is unlocked with a corresponding remote transmitter/keyless access remote.

If you try to enter the customizing mode while the vehicle is moving, you will see a “MUST STOP AND SHIFT TO PARK TO CHANGE SETTINGS” message and you cannot change the settings.

See page 160 to link your remote transmitter/keyless access remote to your vehicle.

If the remote transmitter is not linked, “CUSTOMIZING NOT AVAILABLE UNTIL LINKED TO REMOTE” will be displayed, and you cannot customize the settings.

If you use the key to unlock the driver's door, the system cannot recognize either “DRIVER 1” or “DRIVER 2.”

If you want to change any vehicle control settings, select Keyless Memory Settings™ by pressing either INFO button (▲/▼), then press the SEL/RESET button. Select CHG SETTING, then press the SEL/RESET button.

If you want the settings as they were when the vehicle left the factory, select DEFAULT ALL, as described on page 99.

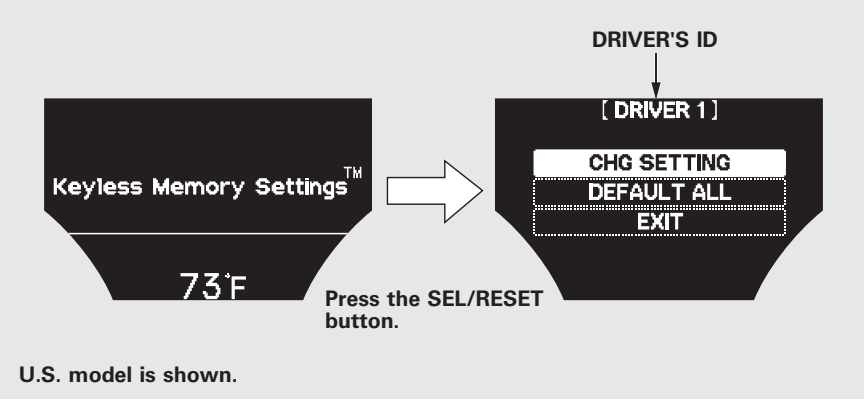


U.S. model is shown.

Refer to the table on the following pages about the settings you want to customize.

*CONTINUED*

| Group Setup | Menu Item | Description | Setting Option | | Page |
|---|---|---|---|---|---|
| ACC SETUP*2 (P. 102) | PRE-RUNNING CAR DETECT BEEP | Causes the system to beep when a vehicle ahead of you gets too close. | ON*1 | | 103 |
| | | | OFF | | |
| | ACC DISPLAY SPEED UNIT | Changes the ACC display speed unit. | km/h*1 (Canada) | | 104 |
| | | | mph*1 (U.S.) | | |
| METER SETUP (P. 105) | LANGUAGE SELECTION | Changes the language used in the display. | ENGLISH*1 | | 107 |
| | | | FRENCH | | |
| | | | SPANISH | | |
| | ADJUST OUTSIDE TEMP. DISPLAY | Changes the outside temperature reading above or below its current reading. | −5°F～±0°F*1～5°F (U.S.) | | 108 |
| | | | −3°C～±0°C*1～3°C (Canada) | | |
| | TRIP COMPUTER TRIP A INFO RESET | Changes the setting of how to reset trip meter A, average fuel economy A, average speed A, and elapsed time A. | WITH REFUEL*1 | | 109 |
| | | | MANUAL ONLY | | |
| | | | IGN OFF | | |
| | ADJUST ALARM VOLUME | Changes the indicator alarm volume into three levels. | HIGH | | 110 |
| | | | MID*1 | | |
| | | | LOW | | |
| | AUTO INTERIOR ILLUMINATION | Changes the interior light sensitivity to your liking. | MAX | LOW | 111 |
| | | | HIGH | MIN | |
| | | | MID*1 | OFF | |
| | KEYLESS START GUIDANCE SCREENS*3 | Changes the display of the keyless start guidance screens. | ON*1 | | 113 |
| | | | OFF | | |

*1: Default setting

*2: On models with adaptive cruise control (ACC)

*3: On models with keyless access system

| Group Setup | Menu Item | Description | Setting Option | | Page |
|---|---|---|---|---|---|
| POSITION SETUP (P. 114) | MEMORY POSITION LINK | Changes the driver's seat, the steering wheel, and the outside mirror positions to a stored setting. | ON*1 | | 115 |
| | | | OFF | | |
| | AUTO TILT AND TELESCOPE STEERING WHEEL | Moves the steering wheel fully up when you get in/ get out of the vehicle. | ON*1 | | 116 |
| | | | OFF | | |
| KEYLESS ACCESS SETUP*2 (P. 118) | DOOR UNLOCK MODE | Changes which doors unlock when you grab the driver's door handle. | DRIVER DOOR*1 | | 119 |
| | | | ALL DOORS | | |
| | KEYLESS ACCESS LIGHT FLASH | Causes some exterior lights to blink when you unlock/lock the doors. | ON*1 | | 120 |
| | | | OFF | | |
| | KEYLESS ACCESS BEEP | Causes the beeper to sound when you unlock/lock the doors. | ON*1 | | 121 |
| | | | OFF | | |
| LIGHTING SETUP (P. 123) | INTERIOR LIGHT DIMMING TIME | Changes how long (in seconds) the interior lights stay on after you close the doors and the tailgate. | 60 sec | | 124 |
| | | | 30 sec*1 | | |
| | | | 15 sec | | |
| | HEADLIGHT AUTO OFF TIMER | Changes how long (in seconds) the exterior lights stay on after you close the driver's door. | 60 sec | | 125 |
| | | | 30 sec | 0 sec | |
| | | | 15 sec*1 | | |
| | AUTO LIGHT SENSITIVITY | Changes the timing of when the headlights come on. The headlight switch needs to be in the AUTO position. | MAX | LOW | 126 |
| | | | HIGH | MIN | |
| | | | MID*1 | | |

*1: Default setting

*2: On models with keyless access system

*CONTINUED*

| Group Setup | Menu Item | Description | Setting Option | | Page |
|---|---|---|---|---|---|
| DOOR /WINDOW SETUP (P. 128) | AUTO DOOR LOCK | Changes when the doors automatically lock. | SHIFT FROM P | | 129 |
| | | | WITH VEHICLE SPEED* | | |
| | | | OFF | | |
| | AUTO DOOR UNLOCK | Changes when the doors automatically unlock. | SHIFT TO P* | DRIVER DOOR*/ ALL DOORS | 130 |
| | | | IGN OFF | | |
| | | | OFF | | |
| | KEY AND REMOTE UNLOCK MODE | Changes which doors unlock with the remote transmitter/keyless access remote on the first push. | DRIVER DOOR* | | 132 |
| | | | ALL DOORS | | |
| | KEYLESS LOCK ACKNOWLEDGEMENT | The exterior lights flash each time you press the LOCK or UNLOCK button. A beeper will also sound when you press the LOCK button twice. | ON* | | 133 |
| | | | OFF | | |
| | SECURITY RELOCK TIMER | Changes how long it takes (in seconds) for the doors to relock and the security system to set after you unlock but do not open the door. | 90 sec | | 134 |
| | | | 60 sec | | |
| | | | 30 sec* | | |
| DEFAULT ALL (P. 99) | | Set/Cancel all the customized settings as default. | CANCEL | | 99 |
| | | | SET | | |

*: Default setting

## DEFAULT ALL

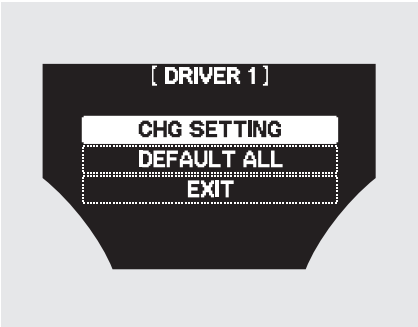


If you want to set the default settings, press the INFO (▲/▼) button to select DEFAULT ALL, then press the SEL/RESET button.

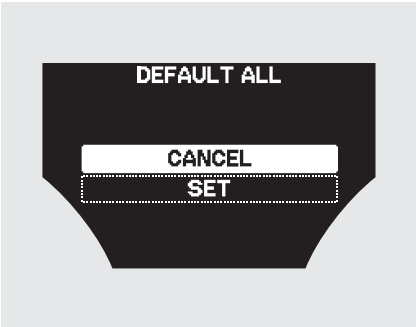


To set the default settings, press the INFO (▲/▼) button to select SET then press the SEL/RESET button.

If you want to cancel DEFAULT ALL, select CANCEL, then press the SEL/RESET button. The screen goes back to the previous display.

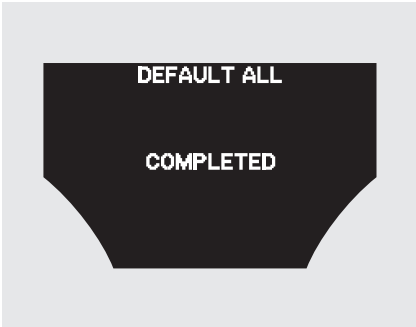


When DEFAULT ALL is set, you will see the above display for several seconds, then the screen returns to the default all setting display.

If the setting is not successfully completed, “FAILED” is shown for several seconds, and then the screen goes back to the normal message mode. Repeat the same procedure to select DEFAULT ALL.

*CONTINUED*

**Customize Settings**
You can customize some of the vehicle control settings to your preference. Here are the settings you can customize:

- ADAPTIVE CRUISE CONTROL (ACC) SETUP*1
- METER SETUP
- POSITION SETUP
- KEYLESS ACCESS SETUP*2
- LIGHTING SETUP
- DOOR/WINDOW SETUP

*1: On models with adaptive cruise control (ACC)
*2: On models with keyless access system

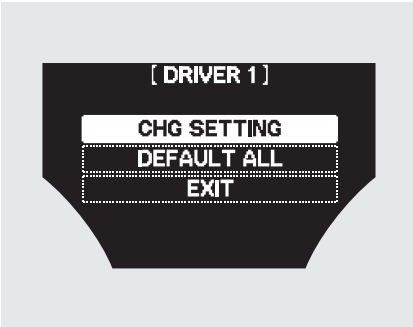


When you want to change the vehicle control settings, press the INFO (▲/▼) button to select CHG SETTING, then press the SEL/RESET button.

Each time you press the INFO (▲/▼) button, the screen changes as shown on the next page. Press the INFO (▲/▼) button, until you see the setup you want to customize, then press the SEL/RESET button to enter your selection.

If you do not make any changes, select EXIT, the display returns to normal.

If you want the settings as they were when the vehicle left the factory, select DEFAULT ALL, as described on page 99.

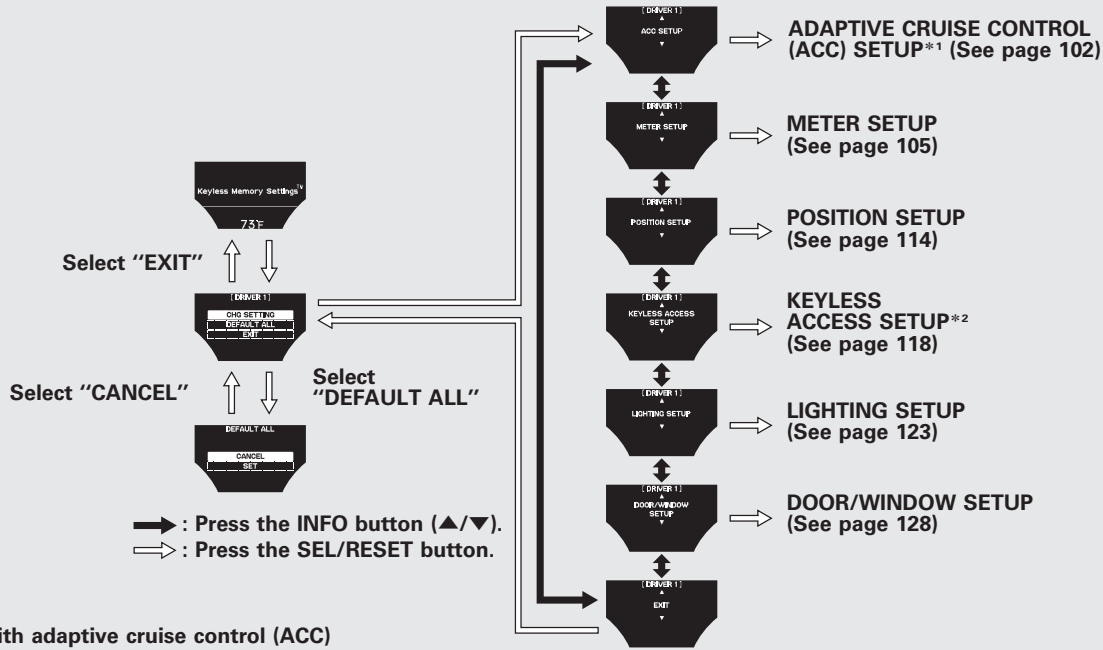


*1: On models with adaptive cruise control (ACC)
*2: On models with keyless access system

*CONTINUED*

**Adaptive Cruise Control Setup**
*On models with adaptive cruise control (ACC)*
Here are the two custom settings for adaptive cruise control (ACC):

- PRE-RUNNING CAR DETECT BEEP
- ACC DISPLAY SPEED UNIT

While “ACC SETUP” is shown, press the SEL/RESET button to enter the customize mode.

Each time you press the INFO (▲/▼) button, the display changes as shown in the illustration. Press the INFO (▲/▼) button until you see the setting you want to customize, then press the SEL/RESET button to enter your selection.

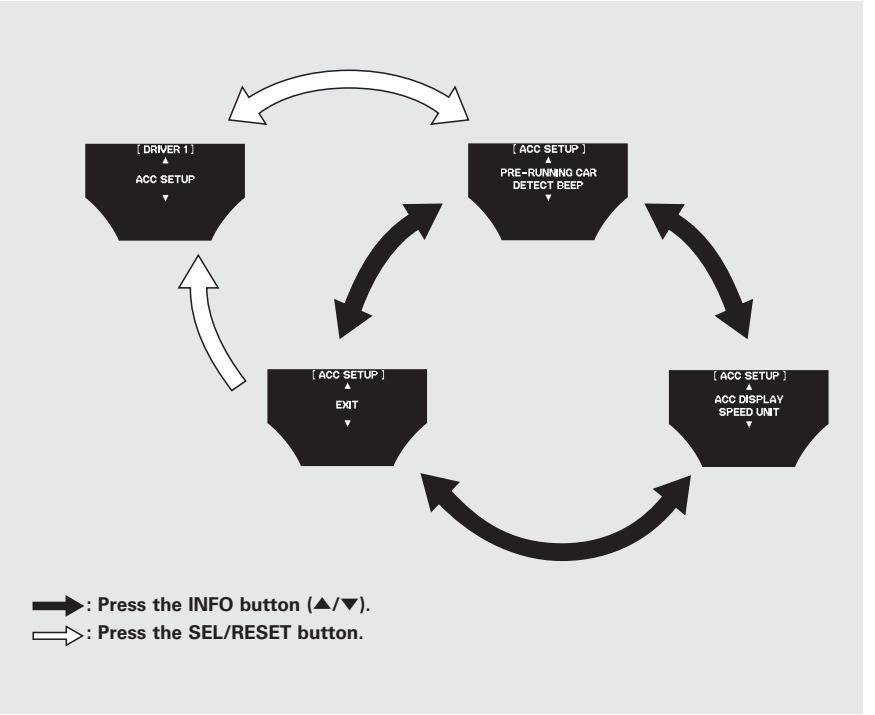

*Pre-Running Car Detect Beep*

When PRE-RUNNING CAR DETECT BEEP is set to ON, one beep sounds when the ACC detects a vehicle in front of you. You also hear a beep when that vehicle goes out of the range of your vehicle's radar sensor.

You can choose this item to customize from “ACC SETUP” by pressing the INFO (▲/▼) button repeatedly.

Press the SEL/RESET button to see the selections.

Select the desired setting by pressing the INFO (▲/▼) button, then enter your selection by pressing the SEL/RESET button.

*CONTINUED*

When your selection is successfully completed, the display changes as shown above, and then goes back to the customize item screen.

If the “SETTING INCOMPLETE” message appears, go back to “PRE-RUNNING CAR DETECT BEEP” and repeat the procedure again.

*Adaptive Cruise Control Display Speed Unit*

To change the unit of measurement from mph to km/h, do this:

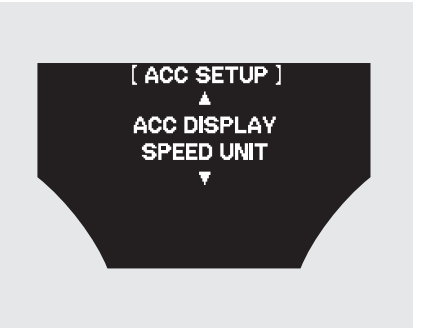


You can choose this item to customize from “ACC SETUP” by pressing the INFO (▲/▼) button repeatedly.

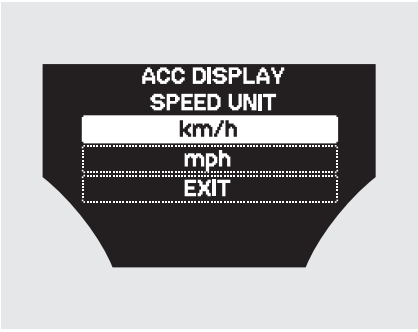


Press the SEL/RESET button to see the selections.

Select the desired setting by pressing the INFO (▲/▼) button, then enter your selection by pressing the SEL/RESET button.

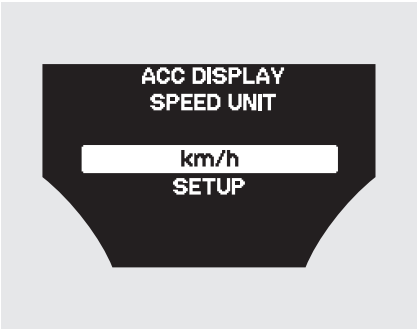


When your selection is successfully completed, the display changes as shown above, and then goes back to the customize item screen.

If the “SETTING INCOMPLETE” message appears, go back to “ACC DISPLAY SPEED UNIT” and repeat the procedure again.

**Meter Setup**

Here are the five or six custom settings for the meter setup:

- LANGUAGE SELECTION
- ADJUST OUTSIDE TEMP. DISPLAY
- TRIP COMPUTER TRIP A INFO RESET
- ADJUST ALARM VOLUME
- AUTO INTERIOR ILLUMINATION
- KEYLESS START GUIDANCE SCREENS*

*: On models with keyless access system

While METER SETUP is shown, press the SEL/RESET button to enter the customize mode.

*CONTINUED*

Each time you press the INFO (▲/▼) button, the display changes as shown in the illustration. Press the INFO (▲/▼) button until you see the setting you want to customize, then press the SEL/RESET button to enter your selection.

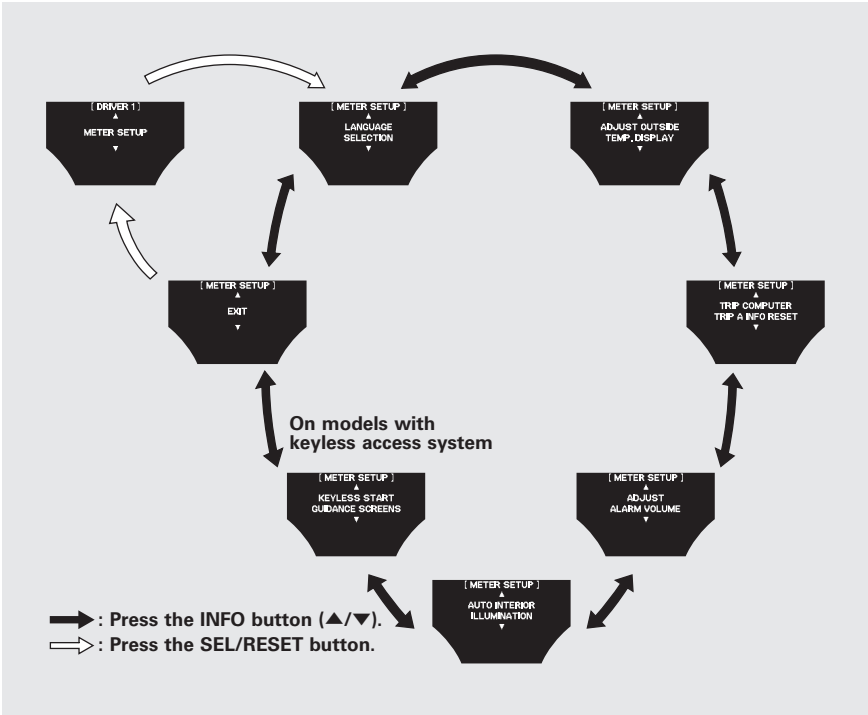

*Language Selection*

There are three language selections you can make: English, French, and Spanish. To choose the language you want, follow these instructions:

You can choose this customize item from “METER SETUP” by pressing the INFO (▲/▼) button repeatedly.

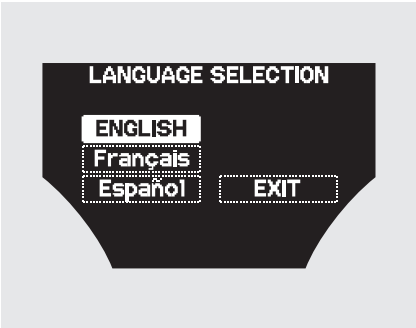


Press the SEL/RESET button to see the selections.

Select the desired language by pressing the INFO (▲/▼) button, then enter your selection by pressing the SEL/RESET button.

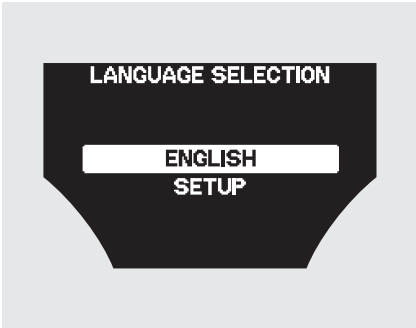


When your selection is successfully completed, the display changes as shown above, and then goes back to the customize item screen.

If the “SETTING INCOMPLETE” message appears, go back to “LANGUAGE SELECTION” and repeat the procedure again.

*CONTINUED*

*Adjust Outside Temp. Display*

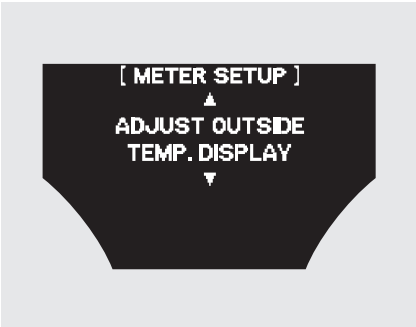


If you sometimes find that the temperature reading is a few degrees above or below the actual temperature, you can adjust it by following these instructions:

You can choose this customize item from “METER SETUP” by pressing the INFO (▲/▼) button repeatedly.

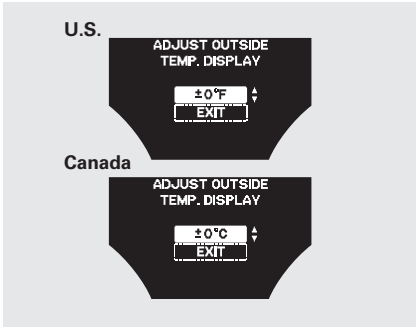


Adjust the outside temperature value by pressing the INFO (▲/▼) button repeatedly. Press the SEL/RESET button to set the desired value.

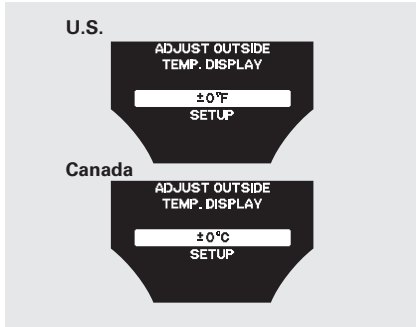


When your selection is successfully completed, the display changes as shown above, and then goes back to the customize item screen.

If the “SETTING INCOMPLETE” message appears, go back to “ADJUST OUTSIDE TEMP. DISPLAY” and repeat the procedure again.

*Trip Computer Trip A Info Reset*

You can select the reset timing of the Trip A information: Trip A, Average Fuel Economy A, Average Vehicle Speed A, and Elapsed Time A.

There are three reset choices you can make:

WITH REFUEL – The Trip A information is reset every time you refuel your vehicle.

MANUAL ONLY – You can reset the Trip A information when you press and hold the SEL/RESET button until the number resets.

IGN OFF – The Trip A information is reset when you turn the ignition switch to the LOCK (0) position.

Models equipped with the keyless access system have an engine start/stop button instead of an ignition switch. VEHICLE OFF (LOCK) mode is the equivalent of LOCK (0). For more information, see pages 194 and 196.

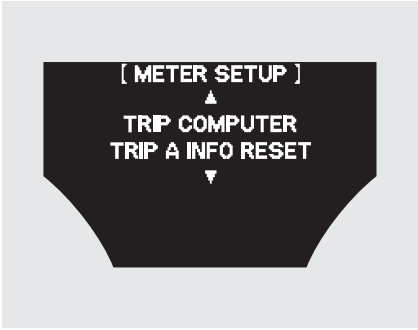


You can choose this item to customize from “METER SETUP” by pressing the INFO (▲/▼) button repeatedly.

*CONTINUED*

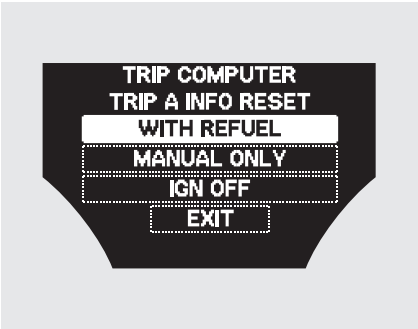


Press the SEL/RESET button to see the selections.

Select the desired setting by pressing the INFO (▲/▼) button, then enter your selection by pressing the SEL/RESET button.

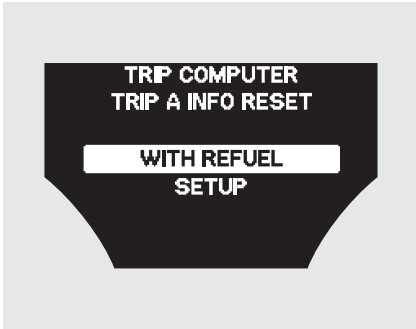


When your selection is successfully completed, the display changes as shown above, and then goes back to the customize item screen.

If the “SETTING INCOMPLETE” message appears, go back to “TRIP COMPUTER TRIP A INFO RESET” and repeat the procedure again.

*Adjust Alarm Volume*

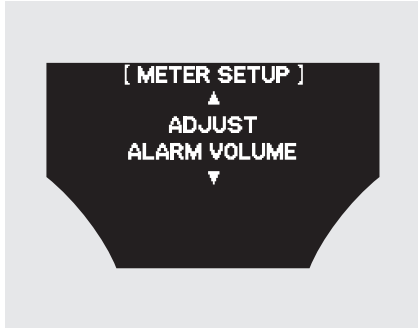


Select the warning alarm volume from three levels.

You can choose this customize item from “METER SETUP” by pressing the INFO (▲/▼) button repeatedly.

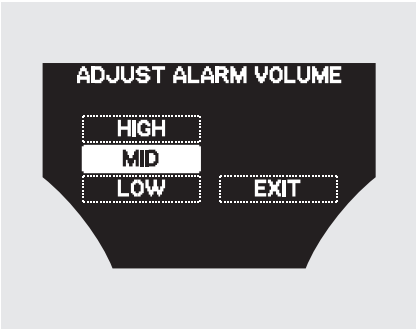


Press the SEL/RESET button to see the selections.

Select the desired level by pressing the INFO (▲/▼) button, then enter your selection by pressing the SEL/RESET button.

When your selection is successfully completed, the display changes as shown above, and then goes back to the customize item screen.

If the “SETTING INCOMPLETE” message appears, go back to “ADJUST ALARM VOLUME” and repeat the procedure again.

*Auto Interior Illumination*

To reduce glare at night, the instrument lights gradually dim when you turn the headlight switch on. You can customize when the instrument lights dim, according to the outside light level.

There are MAX, HIGH, MID, LOW and MIN levels and OFF for the auto interior illumination settings.

If you want the illuminations to start dimming as early as possible, select MAX. For illuminations to start dimming as late as possible, select MIN. Choose HIGH, MID, or LOW for levels in between.

To disable the auto interior illumination function, select OFF.



*CONTINUED*

You can choose this customize item from “METER SETUP” by pressing the INFO (▲/▼) button repeatedly.

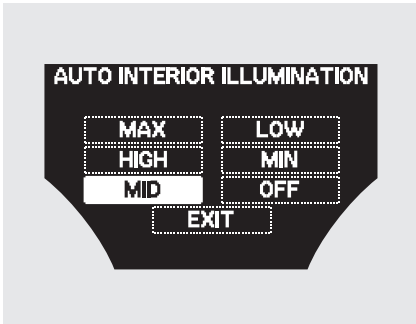


Press the SEL/RESET button to see the selections.

Select the desired setting by pressing the INFO (▲/▼) button, then enter your selection by pressing the SEL/RESET button.

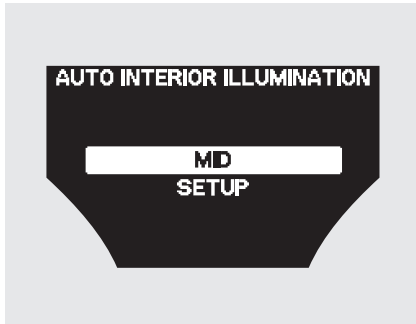


When your selection is successfully completed, the display changes as shown above, and then goes back to the customize item screen.

If the “SETTING INCOMPLETE” message appears, go back to “AUTO INTERIOR ILLUMINATION” and repeat the procedure again.

*Keyless Start Guidance Screens*

*On models with keyless access system*
When this item is set to ON, you will see some guidance messages on the multi-information display. You can change this setting between on and off. For more information on start guidance messages, see page 197.

You can choose this item to customize from “METER SETUP” by pressing the INFO (▲/▼) button repeatedly.

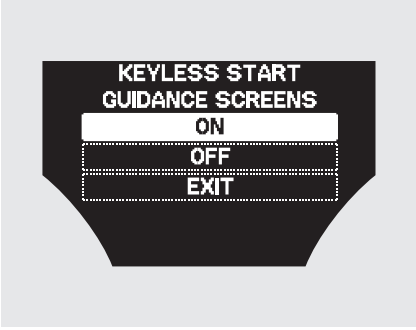


Press the SEL/RESET button to see the selections.

Select ON or OFF by pressing the INFO (▲/▼) button, then enter your selection by pressing the SEL/RESET button.

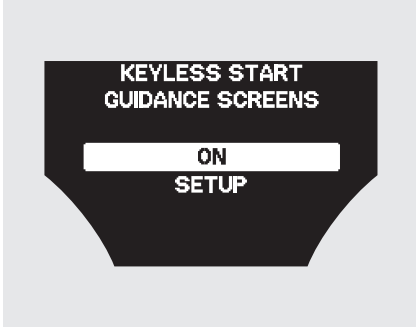


When your selection is successfully completed, the display changes as shown above, and then goes back to the customize item screen.

If the “SETTING INCOMPLETE” message appears, go back to “KEYLESS START GUIDANCE SCREENS” and repeat the procedure again.



*CONTINUED*

**Position Setup**
Here are the two custom settings for the position setup:

- MEMORY POSITION LINK
- AUTO TILT AND TELESCOPE STEERING WHEEL

While “POSITION SETUP” is shown, press the SEL/RESET button to enter the customize mode.

Each time you press the INFO (▲/▼) button, the screen changes as shown in the illustration. Press the INFO (▲/▼) button until you see the setting you want to customize, then press the SEL/RESET button to enter your selection.

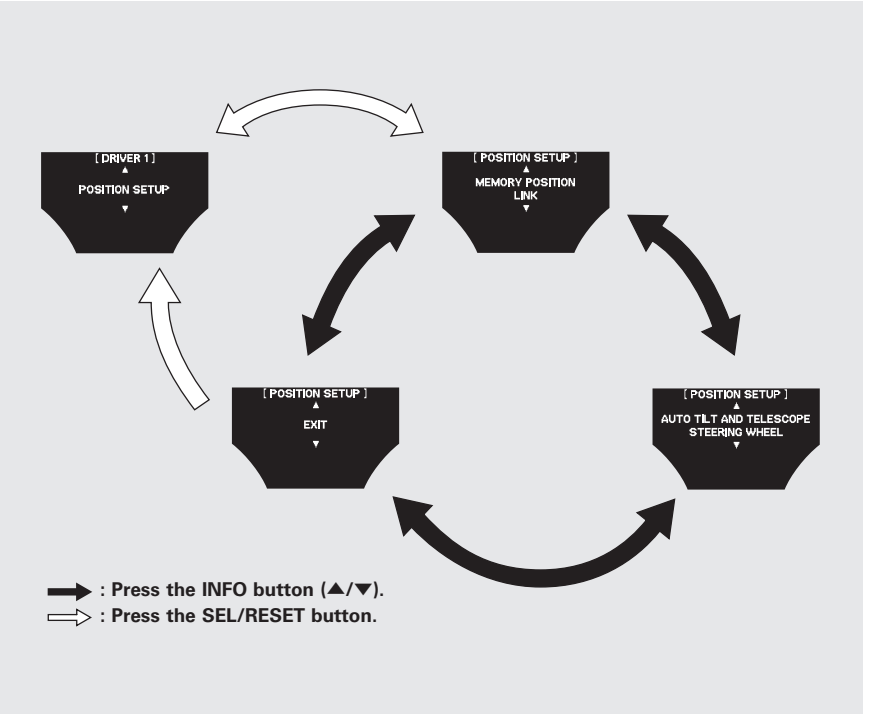

*Memory Position Link*

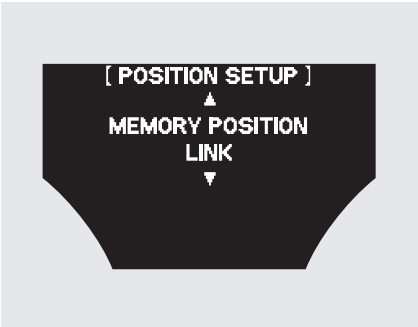


If “MEMORY POSITION LINK” is set to “ON,” the driver's seat, the steering wheel, and outside mirror positions move to the position stored in the memory when you open the driver's door, using the remote transmitter.

On models with keyless access system, open the driver's door with the remote, or grab the door handle while carrying the remote.

To set the memory positions, see page 180.

*On models with keyless access system*
For information on using the remote, see page 183.

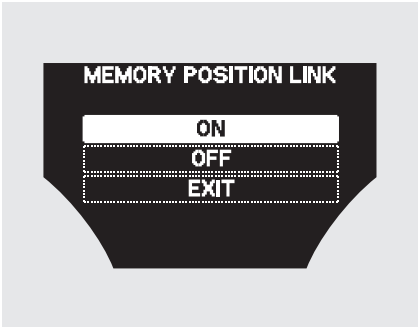


You can choose this customize item from “POSITION SETUP” by pressing the INFO (▲/▼) button repeatedly.

Press the SEL/RESET button to see the selections.

Select ON or OFF by pressing the INFO (▲/▼) button, then enter your selection by pressing the SEL/RESET button.

*CONTINUED*

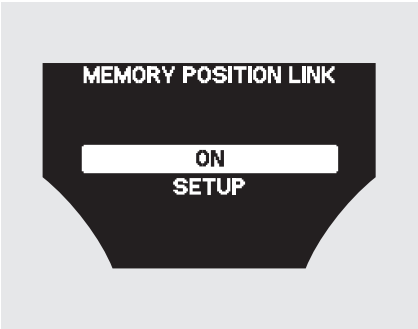


When your selection is successfully completed, the display changes as shown above, and then goes back to the customize item screen.

If the “SETTING INCOMPLETE” message appears, go back to “MEMORY POSITION LINK” and repeat the procedure again.

*Auto Tilt and Telescope Steering Wheel*

When “AUTO TILT AND TELESCOPE STEERING WHEEL” is set to “ON,” the steering wheel automatically moves fully up when you turn the ignition switch to the LOCK (0) position and remove the key (or the vehicle is in VEHICLE OFF mode on models with keyless access system).

You can choose this customize item from “POSITION SETUP” by pressing the INFO (▲/▼) button repeatedly.

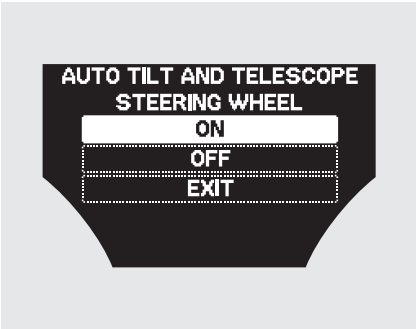


Press the SEL/RESET button to see the selections.

Select ON or OFF by pressing the INFO (▲/▼) button, then enter your selection by pressing the SEL/RESET button.

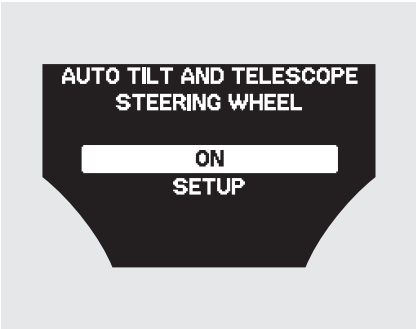


When your selection is successfully completed, the display changes as shown above, and then goes back to the customize item screen.

If the “SETTING INCOMPLETE” message appears, go back to “AUTO TILT AND TELESCOPE STEERING WHEEL” and repeat the procedure again.



*CONTINUED*

**Keyless Access Setup**
*On models with keyless access system*
There are three custom settings for the keyless access setup:

- DOOR UNLOCK MODE
- KEYLESS ACCESS LIGHT FLASH
- KEYLESS ACCESS BEEP

While “KEYLESS ACCESS SETUP” is shown, press the SEL/RESET button to enter the customize mode.

Each time you press the INFO (▲/▼) button, the screen changes as shown in the illustration. Press the INFO (▲/▼) button, until you see the setting you want to customize, then press the SEL/RESET button to enter your selection.

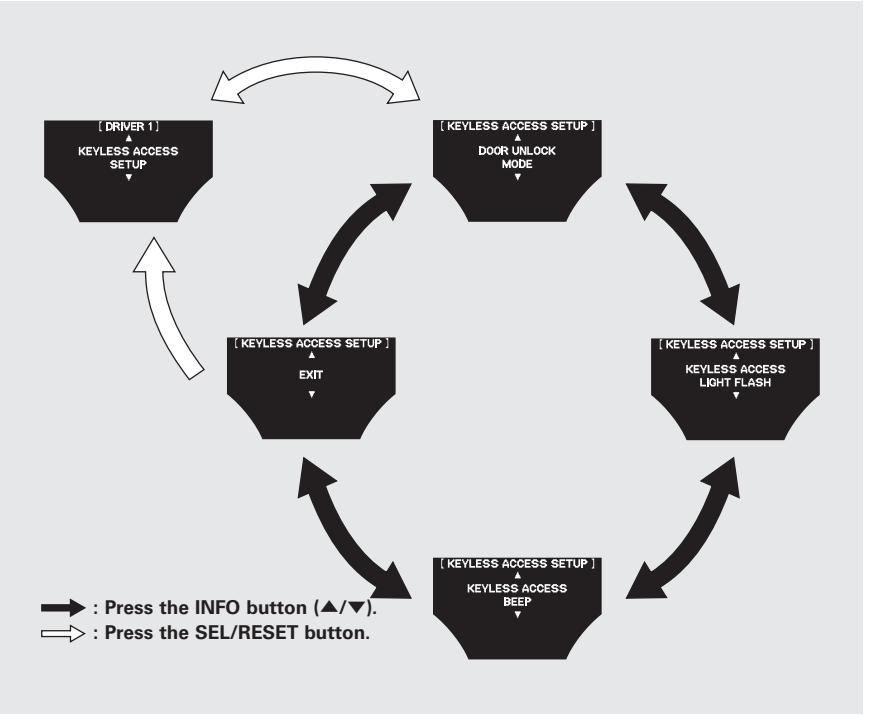

*Door Unlock Mode*

To select whether the driver's door or all doors unlock when you open the driver's door by grabbing the door handle (while carrying the remote), follow these instructions:

You can choose this item to customize from “KEYLESS ACCESS SETUP” by pressing the INFO (▲/▼) button repeatedly.

Press the SEL/RESET button to see the selections.

Select DRIVER DOOR or ALL DOORS by pressing the INFO (▲/▼) button, then enter your selection by pressing the SEL/RESET button.

When your selection is successfully completed, the display changes as shown above, and then goes back to the customize item screen.

If the “SETTING INCOMPLETE” message appears, go back to “DOOR UNLOCK MODE” and repeat the procedure again.

*CONTINUED*

*Keyless Access Light Flash*
When KEYLESS ACCESS LIGHT FLASH is set to ON, some exterior lights blink twice when you unlock the doors by grabbing the driver's door handle while carrying the remote.

The same exterior lights blink once when you lock the doors by pushing the door lock button while carrying the remote.

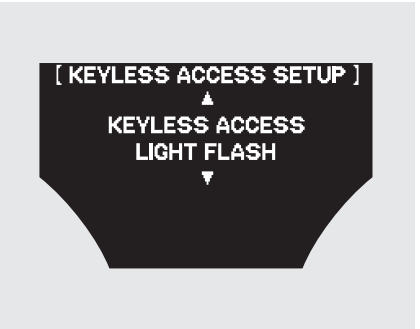


You can choose this item to customize from “KEYLESS ACCESS SETUP” by pressing the INFO (▲/▼) button repeatedly.

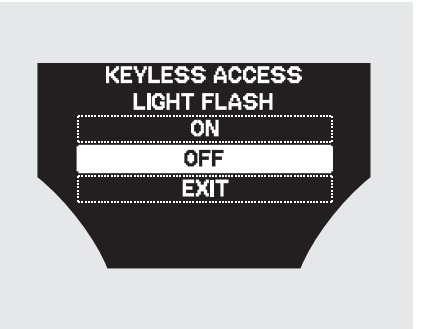


Press the SEL/RESET button to see the selections.

Select ON or OFF by pressing the INFO (▲/▼) button, then enter your selection by pressing the SEL/RESET button.

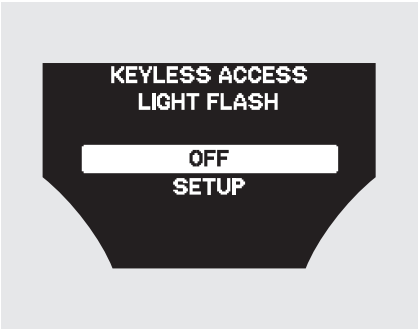


When your selection is successfully completed, the display changes as shown above, and then goes back to the customize item screen.

If the “SETTING INCOMPLETE” message appears, go back to “KEYLESS ACCESS LIGHT FLASH” and repeat the procedure again.

*Keyless Access Beep*

When KEYLESS ACCESS BEEP is set to ON, the beeper sounds twice when you unlock the doors by grabbing the driver's door handle while carrying the remote.

When you lock the doors by pushing the door lock button while carrying the remote, the beeper sounds once.

You can choose this item to customize from “KEYLESS ACCESS SETUP” by pressing the INFO (▲/▼) button repeatedly.



*CONTINUED*

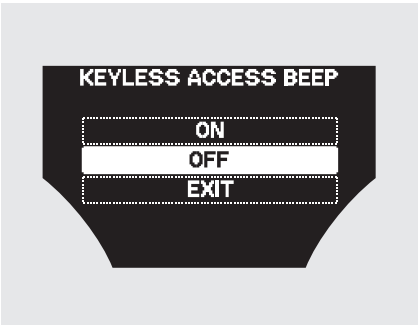


Press the SEL/RESET button to see the selections.

Select ON or OFF by pressing the INFO (▲/▼) button, then enter your selection by pressing the SEL/RESET button.

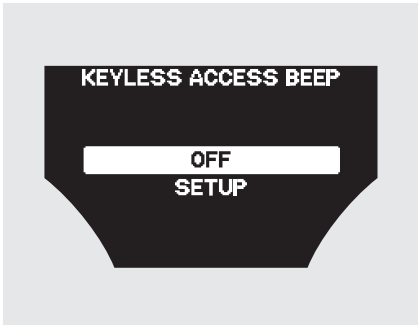


When your selection is successfully completed, the display changes as shown above, and then goes back to the customize item screen.

If the “SETTING INCOMPLETE” message appears, go back to “KEYLESS ACCESS BEEP” and repeat the procedure again.

## Lighting Setup

Here are the three custom settings for the lighting setup:

- INTERIOR LIGHT DIMMING TIME
- HEADLIGHT AUTO OFF TIMER
- AUTO LIGHT SENSITIVITY

While "LIGHTING SETUP" is shown, press the SEL/RESET button to enter the customize mode.

Each time you press the INFO (▲/▼) button, the screen changes as shown in the illustration. Press the INFO (▲/▼) button until you see the setting you want to customize, then press the SEL/RESET button to enter your selection.

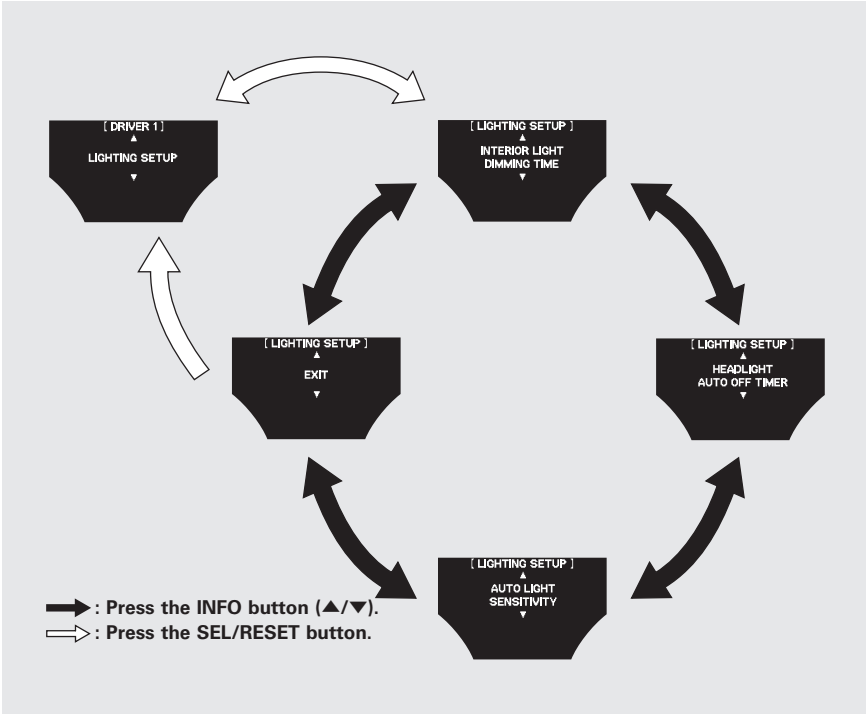


*CONTINUED*

*Interior Light Dimming Time*

The interior lights fade out when you close all doors and tailgate. To change how long the lights stay on before they fade out, follow these instructions:

You can choose this customize item from “LIGHTING SETUP” by pressing the INFO (▲/▼) button repeatedly.

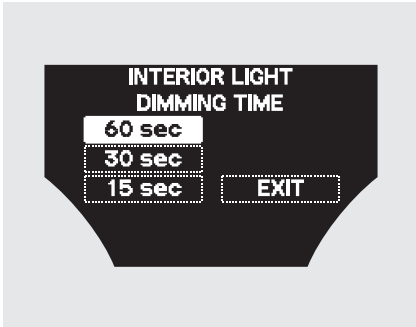


Press the SEL/RESET button to see the selections.

Select the desired setting by pressing the INFO (▲/▼) button, then enter your selection by pressing the SEL/RESET button.

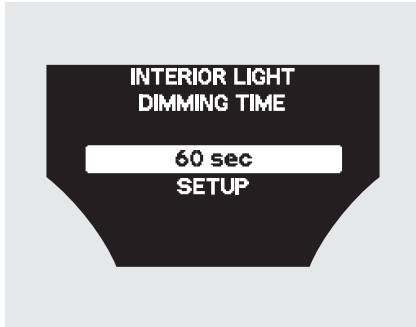


When your selection is successfully completed, the display changes as shown above, and then goes back to the customize item screen.

If the “SETTING INCOMPLETE” message appears, go back to “INTERIOR LIGHT DIMMING TIME” and repeat the procedure again.

*Headlight Auto Off Timer*
The headlights, parking lights, side marker lights, taillights, and license plate lights go off after the selected time when you remove the key from the ignition switch and close the driver's door. On models with keyless access system, the lights go off after the selected time when you close the driver's door and take the remote with you. To change how long the lights stay on before they go off, follow these instructions:

You can choose this customize item from “LIGHTING SETUP” by pressing the INFO (▲/▼) button repeatedly.

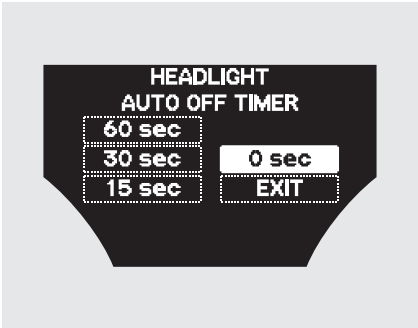


Press the SEL/RESET button to see the selections.

Select the desired setting by pressing the INFO (▲/▼) button, then enter your selection by pressing the SEL/RESET button.

*CONTINUED*

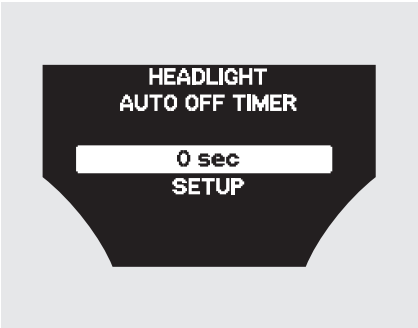


When your selection is successfully completed, the display changes as shown above, and then goes back to the customize item screen.

If the “SETTING INCOMPLETE” message appears, go back to “HEADLIGHT AUTO OFF TIMER” and repeat the procedure again.

*Auto Light Sensitivity*

The headlights automatically come on when the headlight switch is in the AUTO position and the ambient light reaches a changeable level. You can select the auto light sensitivity from the following five levels:

MAX –
The headlights come on when it is bright.

HIGH –
The headlights come on when it is somewhat bright.

MID –
The headlights come on when it is as bright as sunset or sunrise.

LOW –
The headlights come on when it is somewhat dark.

MIN –
The headlights come on when it is dark.

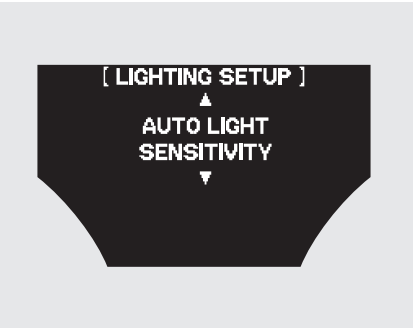


You can choose this customize item from “LIGHTING SETUP” by pressing the INFO (▲/▼) button repeatedly.

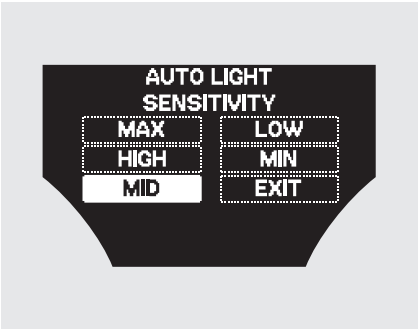


Press the SEL/RESET button to see the selections.

Select the desired setting by pressing the INFO (▲/▼) button, then enter your selection by pressing the SEL/RESET button.

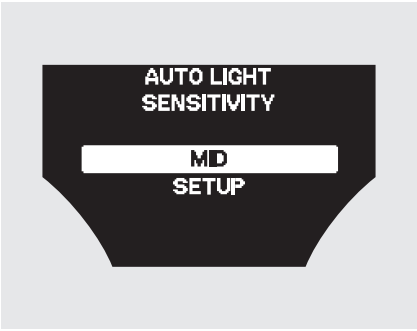


When your selection is successfully completed, the display changes as shown above, and then goes back to the customize item screen.

If the “SETTING INCOMPLETE” message appears, go back to “AUTO LIGHT SENSITIVITY” and repeat the procedure again.



*CONTINUED*

### Door/Window Setup

Here are the five custom settings for the door/window setup:

- AUTO DOOR LOCK
- AUTO DOOR UNLOCK
- KEY AND REMOTE UNLOCK MODE
- KEYLESS LOCK ACKNOWLEDGMENT
- SECURITY RELOCK TIMER

While “DOOR/WINDOW SETUP” is shown, press the SEL/RESET button to enter the customize mode.

Each time you press the INFO (▲/▼) button, the screen changes as shown in the illustration. Press the INFO (▲/▼) button until you see the setting you want to customize, then press the SEL/RESET button to enter your selection.

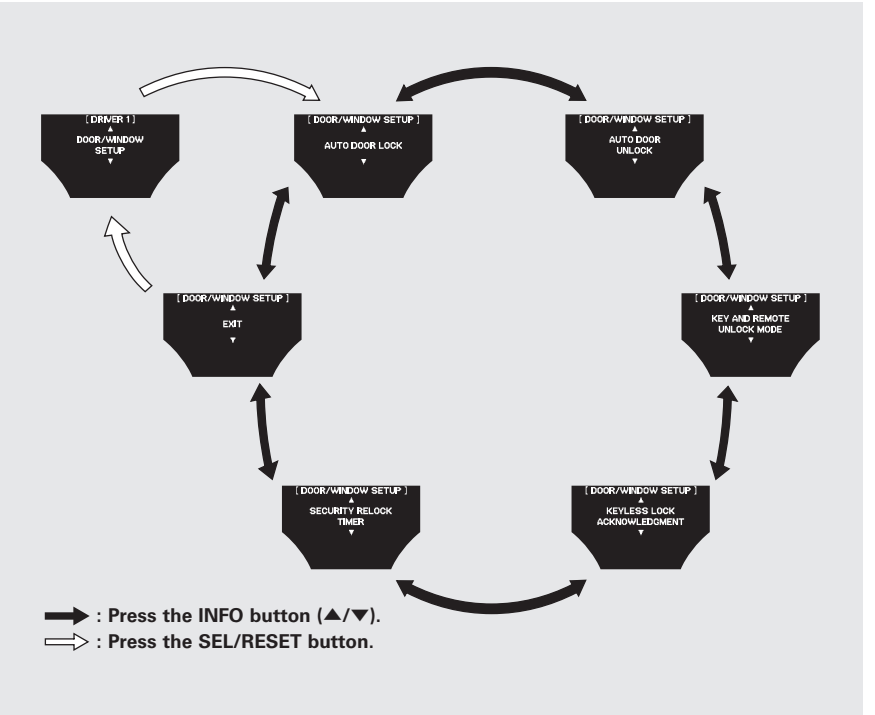

*Auto Door Lock*
There are three settings you can choose from:

SHIFT FROM P –
The doors lock whenever you move the shift lever out of Park.

WITH VEHICLE SPEED –
The doors lock when the vehicle speed reaches about 10 mph (U.S.) or 15 km/h (Canada).

OFF –
The auto door lock is deactivated all the time.

You can choose this customize item from “DOOR/WINDOW SETUP” by pressing the INFO (▲/▼) button repeatedly.

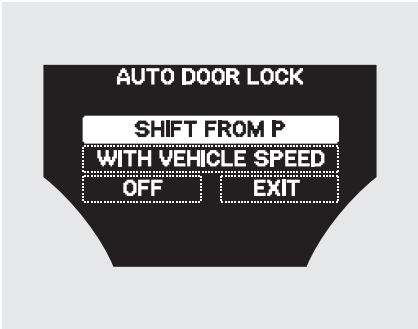


Press the SEL/RESET button to see the selections.

Select the desired setting by pressing the INFO (▲/▼) button, then enter your selection by pressing the SEL/RESET button.

*CONTINUED*

When your selection is successfully completed, the display changes as shown above, and then goes back to the customize item screen.

If the “SETTING INCOMPLETE” message appears, go back to “AUTO DOOR LOCK” and repeat the procedure again.

*Auto Door Unlock*
There are five possible settings you can choose from:

DRIVER DOOR WITH SHIFT TO P – The driver's door unlocks when you move the shift lever to Park with the brake pedal depressed.

ALL DOORS WITH SHIFT TO P – All the doors unlock when you move the shift lever to Park with the brake pedal depressed.

DRIVER DOOR WITH IGN OFF – The driver's door unlocks when you turn the ignition switch to the LOCK (0) position.

ALL DOORS WITH IGN OFF – All the doors unlock when you turn the ignition switch to the LOCK (0) position.

OFF – The auto door unlock is deactivated all the time.

Models equipped with the keyless access system have an engine start/stop button instead of an ignition switch. VEHICLE OFF (LOCK) mode is the equivalent of LOCK (0). See page 196 for ignition switch and power mode comparison.

You can choose this customize item from “DOOR/WINDOW SETUP” by pressing the INFO (▲/▼) button repeatedly.

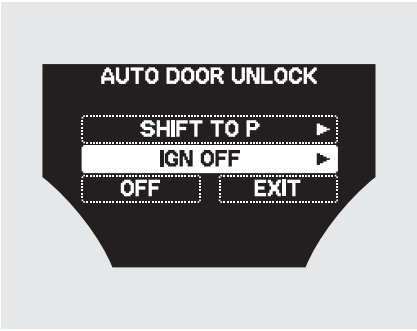


Press the SEL/RESET button to see the selections.

Select the desired setting by pressing the INFO (▲/▼) button, then enter your selection by pressing the SEL/RESET button.

If you choose “IGN OFF,” you will see the above display.

Press the INFO (▲/▼) button to switch the door lock mode setting between the driver's door and all doors. Then, press the SEL/RESET button to enter your selection.



*CONTINUED*

When your selection is successfully completed, the display changes as shown above, and then goes back to the customize item screen.

If the “SETTING INCOMPLETE” message appears, go back to “AUTO DOOR UNLOCK” and repeat the procedure again.

*Key and Remote Unlock Mode*

To select whether the driver's door unlocks or all the doors unlock when you unlock the doors with the remote transmitter/keyless access remote, follow these instructions.

You can choose this customize item from “DOOR/WINDOW SETUP” by pressing the INFO (▲/▼) button repeatedly.

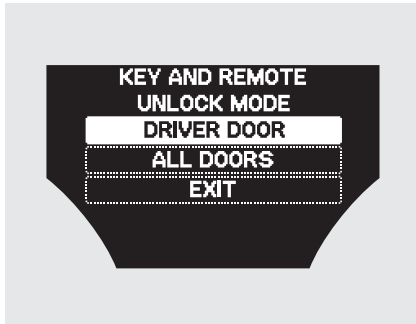


Press the SEL/RESET button to see the selections.

Select the desired setting by pressing the INFO (▲/▼) button, then enter your selection by pressing the SEL/RESET button.

When your selection is successfully completed, the display changes as shown above, and then goes back to the customize item screen.

If the “SETTING INCOMPLETE” message appears, go back to “KEY AND REMOTE UNLOCK MODE” and repeat the procedure again.

*Keyless Lock Acknowledgment*

When you push the LOCK button on the remote transmitter or the keyless access remote, some exterior lights flash, and a beeper sounds when you push the LOCK button again within 5 seconds to verify that the doors and the tailgate are locked and the security system has set (see page 378). You can customize the exterior lights not to flash and the beeper not to sound.

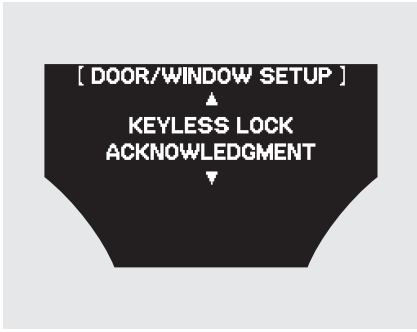


You can choose this customize item from “DOOR/WINDOW SETUP” by pressing the INFO (▲/▼) button repeatedly.



*CONTINUED*

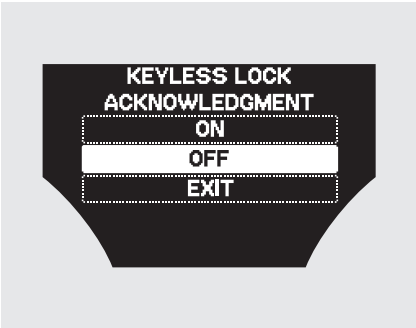


Press the SEL/RESET button to see the selections.

Select ON or OFF by pressing the INFO (▲/▼) button, then enter your selection by pressing the SEL/RESET button.

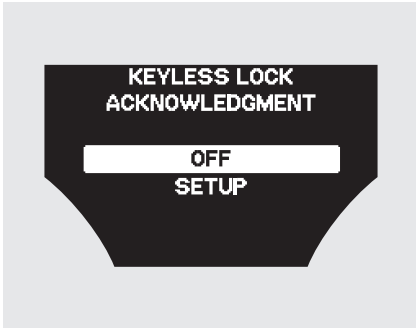


When your selection is successfully completed, the display changes as shown above, and then goes back to the customize item screen.

If the “SETTING INCOMPLETE” message appears, go back to “KEYLESS LOCK ACKNOWLEDGMENT” and repeat the procedure again.

*Security Relock Timer*

If you unlock the doors and the tailgate with the remote transmitter or the keyless access remote, but do not open any of the doors or the tailgate within 30 seconds, the doors and the tailgate automatically relock and the security system sets.

You can change this relock time from 30 seconds to 60 or 90 seconds.

You can choose this customize item from “DOOR/WINDOW SETUP” by pressing the INFO (▲/▼) button repeatedly.

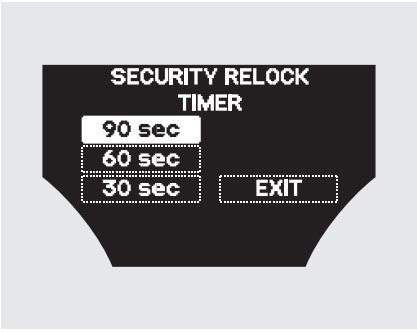


Press the SEL/RESET button to see the selections.

Select the desired setting by pressing the INFO (▲/▼) button, then enter your selection by pressing the SEL/RESET button.

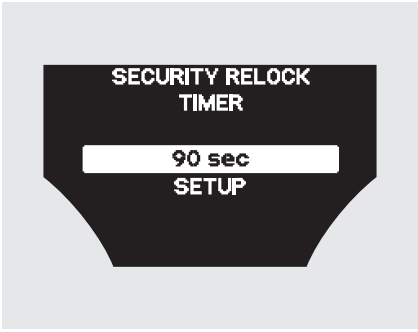


When your selection is successfully completed, the display changes as shown above, and then goes back to the customize item screen.

If the “SETTING INCOMPLETE” message appears, go back to “SECURITY RELOCK TIMER” and repeat the procedure again.

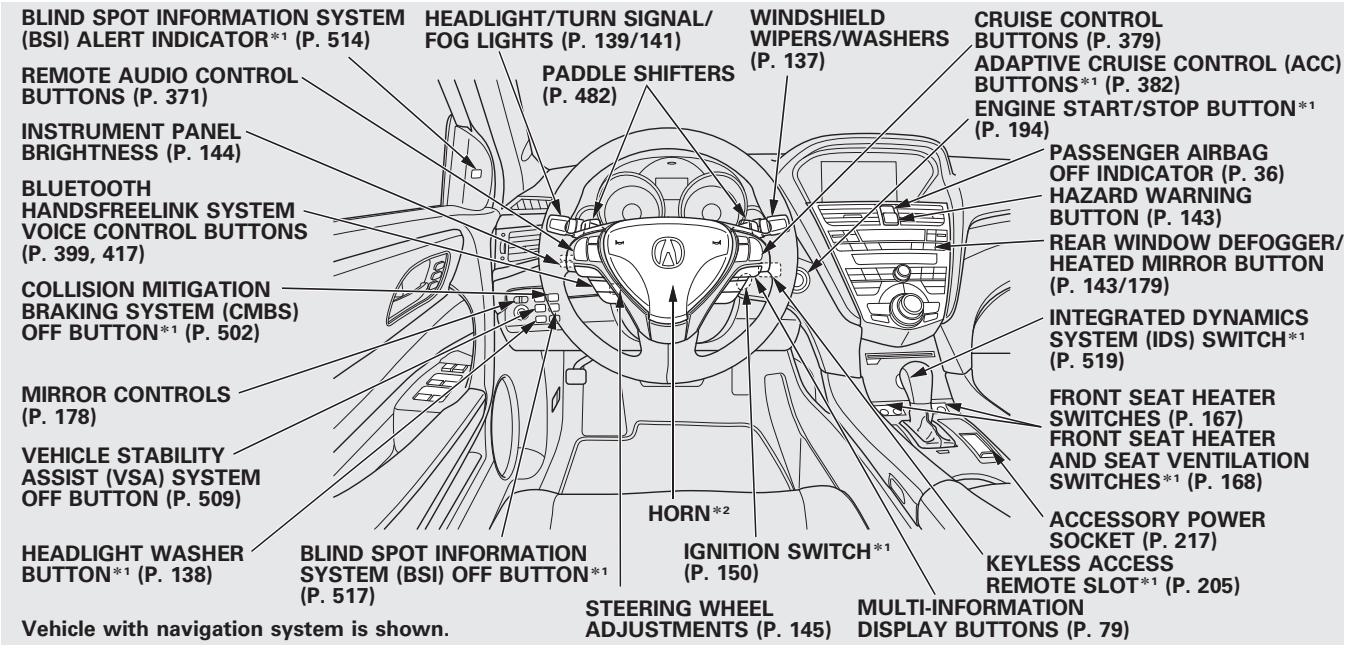


Vehicle with navigation system is shown.

*1: If equipped
*2: To use the horn, press the center pad of the steering wheel.

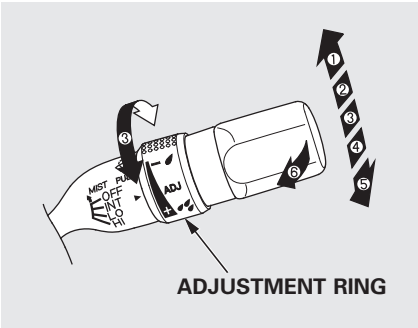


1. MIST
2. OFF
3. INT – Intermittent
4. LO – Low speed
5. HI – High speed
6. Windshield washers

Push the right lever up or down to select a position.

**MIST** – The wipers run at high speed until you release the lever.

**OFF** – The wipers are not activated.

**INT** – The length of the wipe interval is varied automatically according to vehicle speed.

Vary the delay by turning the adjustment ring.

If you turn it to the shortest delay (position), the wipers change to low speed operation when the vehicle speed exceeds 12 mph (20 km/h).

**LO** – The wipers run at low speed.

**HI** – The wipers run at high speed.

**Windshield Washers** – Pull the wiper control lever toward you, and hold it. The washers spray until you release the lever. The wipers run at low speed, then complete one more sweep after you release the lever.

*On Canadian models*
When you activate the windshield washer with the headlights turned on, the headlight washer will be activated under certain conditions. For more information, see ***Headlight Washers*** section in the next column.

*CONTINUED*

***Headlight Washers***
***On Canadian models***

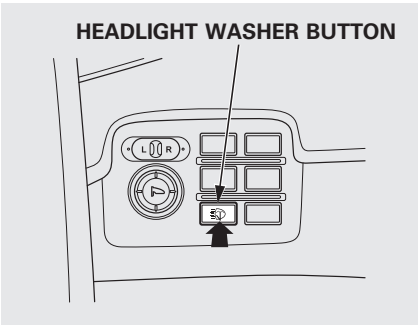


The headlight washers can be operated at any time by pressing the headlight washer button located next to the steering wheel column. The headlights must be turned on to use this button. In addition, the headlight washer operates without pressing the button the first time you turn on the windshield washers with the ignition switch in the ON (II) position.

The headlight washers use the same fluid reservoir as the windshield washers.

Models equipped with the keyless access system have an engine start/stop button instead of an ignition switch. ON mode is the equivalent of ON (II). See page 196 for ignition switch and power mode comparison.

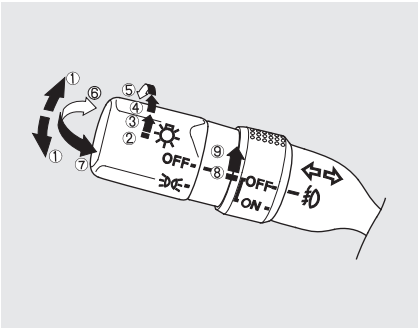


1. Turn signal
2. Off
3. Parking and instrument panel lights
4. AUTO
5. Headlights on
6. High beams
7. Flash high beams
8. Fog lights off
9. Fog lights on

**Turn Signal** – Push down on the lever to signal a left turn and up to signal a right turn. To signal a lane change, push lightly on the lever, and hold it. The lever will return to center when you release it or complete a turn.

**Headlights On** – Turning the switch to the " " position turns on the parking lights, taillights, instrument panel lights, side-marker lights, and rear license plate lights.

Turning the switch to the " " position turns on the headlights.

When the light switch is in either of these positions, the lights on indicator comes on as a reminder.

This indicator stays on if you leave the lights on and turn the ignition switch to the ACCESSORY (I) or LOCK (0) position.

Models equipped with the keyless access system have an engine start/stop button instead of an ignition switch. ACCESSORY mode is the equivalent of ACCESSORY (I), and ON mode is the equivalent of ON (II). See page 196 for ignition switch and power mode comparison.

If you leave the lights on with the key removed from the ignition switch, or with the power mode in VEHICLE OFF (LOCK), you will hear a reminder chime when you open the driver's door.

*CONTINUED*

**High Beams** – To switch from low beams to high beams, push the left lever forward until you hear a click. The blue high beam indicator will come on (see page 71). Pull it back to return to low beams. To flash the high beams, pull the lever back lightly, then release it. The high beams stay on as long as you hold the lever back.

**AUTO** – The automatic lighting feature turns on the headlights and all other exterior lights, when it senses low ambient light.

To turn on automatic lighting, turn the light switch to AUTO at any time. The lights will come on automatically when the outside light level becomes low (at dusk, for example). The lights on indicator comes on as a reminder. The lights and indicator will turn off automatically when the system senses high ambient light.

The lights will remain on when you turn off the ignition switch. They will turn off automatically when you remove the key and open the driver's door. To turn them on again, either turn the ignition switch to the ON (II) position or turn the light switch to the position.

Models equipped with the keyless access system have an engine start/stop button instead of an ignition switch. ON Mode is the equivalent of ON (II). See page 196 for ignition switch and power mode comparison.

Even with the automatic lighting feature turned on, we recommend that you turn on the lights manually when driving at night or in a dense fog, or when you enter dark areas such as long tunnels or parking facilities.

To change the “AUTO LIGHT SENSITIVITY” setting, see page 126.

Do not leave the light switch in AUTO if you will not be driving the vehicle for an extended period (a week or more). You should also turn off the lights if you plan to leave the engine idling or off for a long time.

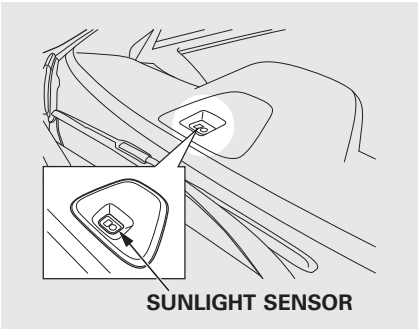


The automatic lighting feature is controlled by a sensor located on top of the dashboard. Do not cover this sensor or spill liquids on it.

## Fog Lights

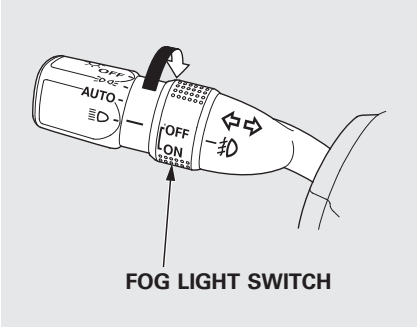


Turn the fog lights on and off by turning the switch next to the headlight switch.

You can use the fog lights only when the headlights are on low beam. With the light switch in the AUTO position, you can also use the fog lights when the headlights turn on automatically. They will go off when the headlights turn off, or the daytime running lights are on.

## Daytime Running Lights

With the headlight switch off, the daytime running lights come on when you turn the ignition switch to the ON (II) position and release the parking brake. They remain on until you turn the ignition switch off, even if you set the parking brake.

When the headlights are on, the daytime running lights are off.



*CONTINUED*

If you see a “CHECK DRL SYSTEM” message on the multi-information display, there is a problem with the daytime running light system. Take your vehicle to a dealer to have it checked.

When the multi-information display shows a “DRL OFF” message, the daytime running lights are off. DRL will turn on when the parking brake is released.

**Automatic Lighting Off Feature**
This feature turns off the headlights, all other exterior lights, and the instrument panel lights within 15 seconds after you remove the key and close the driver's door.

To change the “HEADLIGHT AUTO OFF TIMER” setting, see page 125.

The automatic lighting off feature activates if you remove the key (or the vehicle is in VEHICLE OFF mode on models with keyless access system), and open or close driver's door with the headlight switch in the “ ” or “ ” position, or the lights turned on in the “AUTO” position.

If you turn the ignition switch to the LOCK (0) position with the headlight switch on, but do not open the door, the lights turn off after 10 minutes (3 minutes, if the switch is in the “AUTO” position).

The lights turn on again when you unlock or open the driver's door. If you unlock the door, but do not open it within 15 seconds, the lights go off. With the driver's door open, you will hear a lights-on reminder chime.

Models equipped with the keyless access system have an engine start/stop button instead of an ignition switch. VEHICLE OFF (LOCK) mode is the equivalent of LOCK (0). See page 196 for ignition switch and power mode comparison.

## Hazard Warning Button

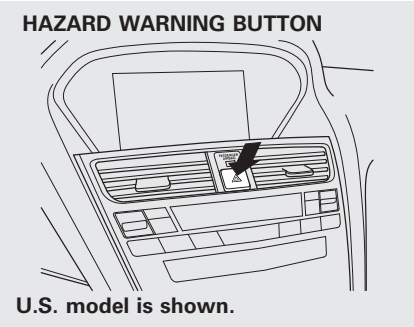


U.S. model is shown.

Push the button between the center vents to turn on the hazard warning lights (four-way flashers). This causes all four outside turn signals and both indicators in the instrument panel to flash. Use the hazard warning lights if you need to park in a dangerous area near heavy traffic, or if your vehicle is disabled.

## Rear Window Defogger

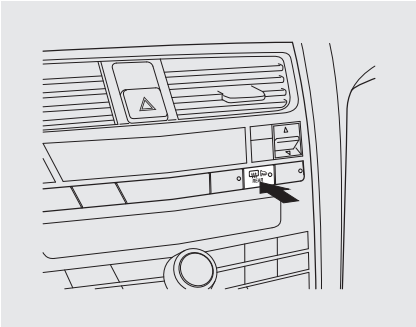

The rear window defogger will clear fog, frost, and thin ice from the window. Push the defogger button to turn it on and off.

The indicator in the button lights to show the defogger is on. If you do not turn it off, the defogger will shut itself off within about 10 to 30 minutes according to the outside temperature. It also shuts off when you turn off the ignition switch, or set the power mode to VEHICLE OFF (LOCK) on models with keyless access system. You have to turn it on again when you restart the vehicle.

Make sure the rear window is clear and you have good visibility before starting to drive.

The defogger wires on the inside of the rear window can be accidentally damaged. When cleaning the glass, always wipe side-to-side.

Pushing this button also turns the mirror heaters on or off. For more information, see page 179.

# Instrument Panel Brightness

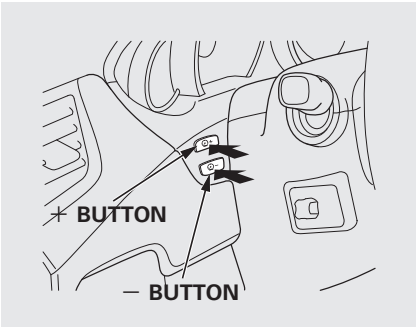


Adjust the brightness of the instrument panel by pressing the + or – button. Press the + button to increase the brightness and the – button to decrease it. The brightness can be set differently for when the headlights are on, and when they are off.

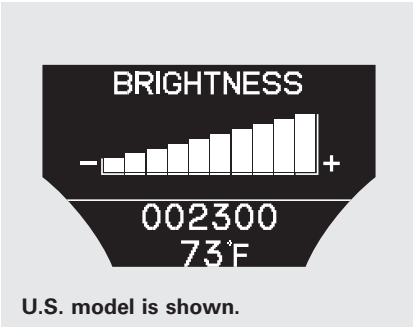


U.S. model is shown.

The level of brightness is shown on the multi-information display while you adjust it. It goes out 5 seconds after you finish adjusting.

To reduce glare at night, the instrument panel illumination dims when you turn the light switch to ≣DC or ≣D. To cancel the glare reduction function, set the brightness to the highest level, then press the + button. You will hear a beep when it is canceled.

When the brightness reaches the maximum level, “BRIGHTNESS MAXIMUM LEVEL” appears on the display.

You can customize when the glare reduction function starts. To change “AUTO INTERIOR ILLUMINATION,” see page 111 for more information.

Make any steering wheel adjustment before you start driving.

**⚠WARNING**

Adjusting the steering wheel position while driving may cause you to lose control of the vehicle and be seriously injured in a crash.

Adjust the steering wheel only when the vehicle is stopped.

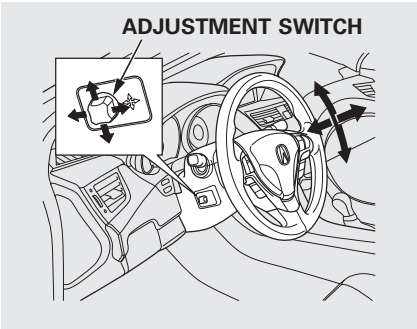


Move the steering wheel in, out, up, or down by pushing and holding the adjustment switch in that direction.

Release the switch when the steering wheel reaches the desired position. Make sure the steering wheel points towards your chest, not toward your face, and that you can see the instrument panel gauges and indicators.



*CONTINUED*

When you remove the key from the ignition switch (or the vehicle is in VEHICLE OFF mode on models with keyless access system), the steering wheel automatically moves fully up.

To change the “AUTO TILT AND TELESCOPE STEERING WHEEL” setting, see page 116.

The steering wheel then returns to its original position when you insert the key back in the ignition switch (or the vehicle is in ON mode on models with keyless access system).

Steering wheel movement is also controlled by the driving position memory system (see page 180).

If your vehicle's battery is disconnected or goes dead, or the fuse for the power tilt and telescopic steering wheel is removed, the power tilt and telescopic steering wheel system needs to be reset when you reconnect the battery or install the fuse.

Insert the key into the ignition switch, and remove it (or set the power mode to VEHICLE OFF on models with keyless access system). The steering wheel automatically moves fully up to let you know the system is reset.

*On models without keyless access system*

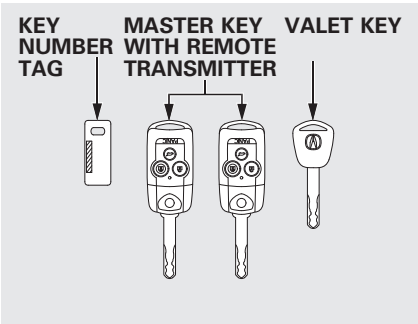


The master key fits all the locks on your vehicle. The valet key works only in the ignition and the driver's door lock. You can keep the glove box locked when you leave your vehicle and the valet key at a parking facility.

You should have received a key number tag with your keys. You will need this key number if you ever have to get a lost key replaced. Use only Acura-approved key blanks.

These keys contain electronic circuits that are activated by the immobilizer system. They will not work to start the engine if the circuits are damaged.

- Protect the keys from direct sunlight, high temperature, and high humidity.
- Do not drop the keys or set heavy objects on them.
- Keep the keys away from liquids. If they get wet, dry them immediately with a soft cloth.

The valet key does not contain a battery. Do not try to take it apart.

***Retractable Master Key***

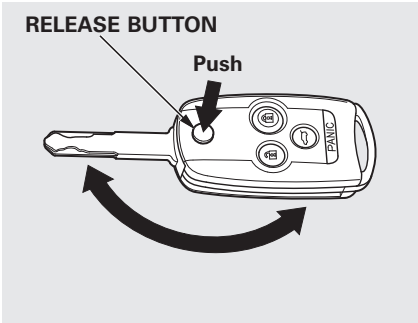


The master key can be retracted into the remote transmitter. To use the key, push the release button to release the key from the transmitter. The key should be fully extended. To retract the key, push the release button and at the same time push the key into the remote transmitter until it is securely latched.

*CONTINUED*

Always use the fully-extended key when you insert it to the ignition switch. If the key does not fully extend, the immobilizer system may not operate may prevent the engine from starting.

The key may come in contact with your finger while being retracted or extended. Make sure your fingers do not touch the pivot of the key when retracting or extending the key.

*On models with keyless access system*

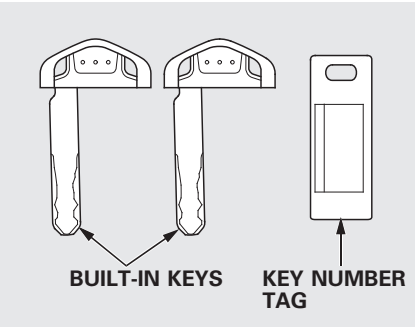


Each keyless access remote has the built-in key. This key is used to lock/unlock the doors when the remote battery becomes weak and the power door lock/unlock operation is disabled. You cannot start the engine with this key.

The built-in key (see page 207) fits all the locks on your vehicle.

You should have received a key number tag with your keys. You will need this key number if you ever have to get a lost key replaced. Use only Acura-approved key blanks.

The Immobilizer System protects your vehicle from theft. If an improperly coded key (or other device) is used, the engine's fuel system is disabled.

When you turn the ignition switch to the ON (II) position, the immobilizer system indicator should come on briefly, then go off. If the indicator starts to blink, it means the system does not recognize the coding of the key. Turn the ignition switch to the LOCK (0) position, remove the key, reinsert it, and turn the ignition switch to the ON (II) position again.

Models equipped with the keyless access system have an engine start/stop button instead of an ignition switch. ON mode is the equivalent of ON (II). See page 196 for ignition switch and power mode comparison.

The system may not recognize your key's coding if another immobilizer key or other metal object (i.e. key chain) is near the ignition switch when you insert the key.

If the system repeatedly does not recognize the coding of your key, contact your dealer.

Do not attempt to alter this system or add other devices to it. Electrical problems could result that may make your vehicle inoperable.

If you have lost your key and you cannot start the engine, contact your dealer.

**NOTICE**

*Always take the ignition key with you whenever you leave the vehicle alone.*

*As required by the FCC:*
*This device complies with Part 15 of the FCC rules. Operation is subject to the following two conditions: (1) This device may not cause harmful interference, and (2) this device must accept any interference received, including interference that may cause undesired operation.*

*Changes or modifications not expressly approved by the party responsible for compliance could void the user's authority to operate the equipment.*

*This device complies with Industry Canada Standard RSS-210.*
*Operation is subject to the following two conditions: (1) this device may not cause interference, and (2) this device must accept any interference that may cause undesired operation of the device.*

*On models without keyless access system*

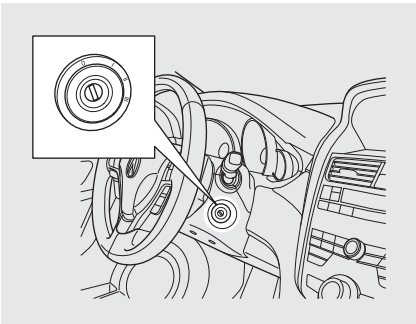

The ignition switch has four positions: LOCK (0), ACCESSORY (I), ON (II), and START (III).

**LOCK (0)** – You can insert or remove the key only in this position. To turn the key to the LOCK (0) position, the shift lever must be in Park, and you must push the key in slightly.

If the front wheels are turned, the anti-theft lock may make it difficult to turn the key. Firmly turn the steering wheel to the left or right as you turn the key.

**ACCESSORY (I)** – You can operate the audio system and the accessory power sockets in this position.

**ON (II)** – This is the normal key position when driving. Several of the indicators on the instrument panel come on as a test when you turn the ignition switch from the ACCESSORY (I) to the ON (II) position.

**START (III)** – Use this position only to start the engine. The switch returns to the ON (II) position when you let go of the key.

You will hear a reminder beeper if you leave the key in the ignition switch in the LOCK (0) or the ACCESSORY (I) position and open the driver's door. Remove the key to turn off the beeper.

You will also see a “REMOVE KEY” message on the multi-information display.

The shift lever must be in Park before you can remove the key from the ignition switch.

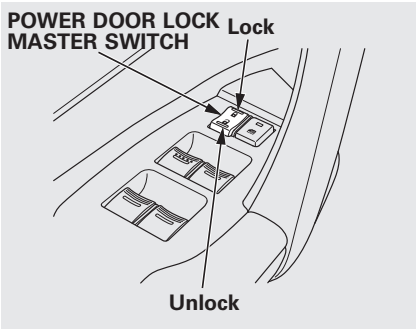


To lock all doors and the tailgate, press the front of the master door lock switch on either front door, pull the lock tab rearward on the driver's door, or use the key on the outside lock on the driver's door.

*On models with keyless access system*

The built-in key can be used to lock/unlock the doors when the remote battery becomes weak and the power door lock/unlock operation is disabled. For more information, see page 207.

Pressing the rear of either master door lock switch will unlock all doors and the tailgate.

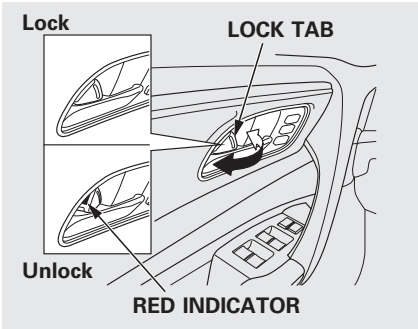


The lock tab on any passenger's door locks and unlocks that door.

Pushing forward the lock tab on the driver's door unlocks only that door.

When the door is unlocked, you can see the red indicator on the lock tab above the inner door handle.

*CONTINUED*

All doors and the tailgate can be locked from the outside by using the key in the driver's door lock. To unlock only the driver's door, insert the key, turn the key, and release it. The remaining doors and the tailgate unlock when you turn the key a second time within a few seconds.

You can customize the door lock/unlock settings (see page 128).

You can open or close the windows and the panoramic glass roof by using the key in the driver's door (see page 173).

Locking and unlocking the driver's door will also lock and unlock the fuel fill door (see page 455).

To change the “KEY AND REMOTE UNLOCK MODE” setting, see page 132.

To lock any passenger's door when getting out of the vehicle, pull the lock tab rearward and close the door.

*On models without keyless access system*

To lock the driver's door, remove the key from the ignition switch, pull the lock tab rearward or push the front of the master switch, then close the door.

***Default Setting***

When the vehicle speed reaches about 10 mph (U.S.) or 15 km/h (Canada) or more, all the doors lock automatically.

When you shift to P after driving, the driver's door unlocks.

***Lockout Prevention***

*On models without keyless access system*

With any door and the tailgate open and the key in the ignition, both master door lock switches are disabled. They are not disabled if all the doors and the tailgate are closed. If you try to lock an open driver's door by pulling the lock tab rearward the lock tab on the driver's door pops out.

## Childproof Door Locks

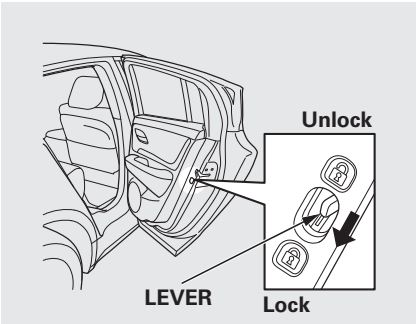


The childproof door locks are designed to prevent children seated in the rear from accidentally opening the rear doors. Each rear door has a lock lever near the edge. With the lever in the LOCK position (lever is down), the door cannot be opened from the inside regardless of the position of the lock tab. To open the door, push the lock tab forward and use the outside door handle.

## Tailgate

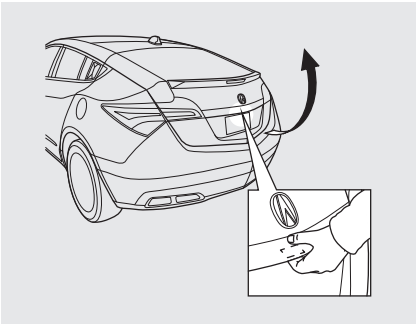

To open the tailgate, push up inside the handle, then lift up. To close the tailgate, use the inner handle to pull it down, then press down on the back edge.

Keep the tailgate closed at all times while driving to avoid damaging the tailgate and to prevent exhaust gas from getting into the interior. See **Carbon Monoxide Hazard** on page 58.

## Power Tailgate

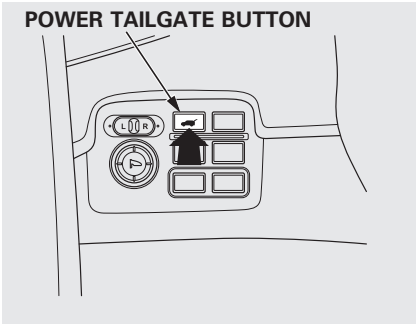


The tailgate can be opened and closed with the remote transmitter/ keyless access remote (see page 157 or 189) or the button in the instrument panel when all doors and the tailgate are unlocked.

Make sure the shift lever is in the Park (P) position.

*CONTINUED*

All doors must be unlocked to operate the power tailgate. Press and hold the tailgate button on the remote transmitter/keyless access remote when the ignition switch is in the LOCK (0) position or hold the button in the instrument panel for about 1 second to open or close the tailgate. Each time you press the button on the remote transmitter/keyless access remote or in the instrument panel, you will hear a beep, and some front and rear lights will flash.

If you push the same button again while the tailgate is opening or closing, you will hear three beeps, and the tailgate will stop moving, reverse direction, and stop at the fully opened or closed position.

Models equipped with the keyless access system have an engine start/stop button instead of an ignition switch. VEHICLE OFF (LOCK) mode is the equivalent of LOCK (0). See page 196 for ignition switch and power mode comparison.

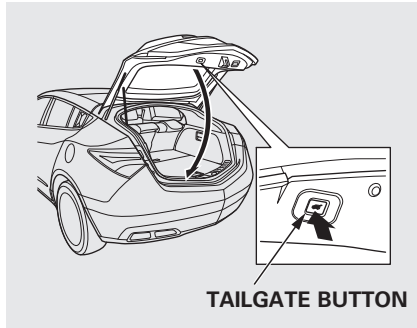


The tailgate can also be closed by pressing the button on the tailgate. If you press the button again while the tailgate is closing, you will hear three beeps, and the tailgate will stop moving, reverse direction, and stop at the fully opened position.

***Auto-Reverse***
The power tailgate has an auto-reverse feature. If it meets resistance while opening or closing, it will beep three times and reverse direction. However, the tailgate may not reverse immediately. Always make sure passengers and objects are clear of the tailgate before opening or closing it.

**⚠WARNING**

Closing a power tailgate while anyone is in the path of the tailgate can cause serious injury.

Make sure everyone is clear before closing the power tailgate.

Also check that passengers, especially children, do not have their hands on the edge of the tailgate or on the tailgate sill. The auto reverse feature stops working when the tailgate is about to latch so the motor can pull the tailgate shut.

If your vehicle's battery is disconnected, goes dead, or the fuse is removed while the tailgate is fully open, the power tailgate needs to be reset. After connecting the battery or installing the fuse, close the tailgate fully by hand.

The power tailgate may not open or close under the these conditions:

- The vehicle is parked on a steep hill.
- When the vehicle is swayed in a strong wind.
- When the tailgate or the roof is covered with snow or ice.

Do not install any accessories on the tailgate. It may cause the tailgate to malfunction. If there is snow or ice on the tailgate, make sure to remove it before you operate the tailgate.

If you push the tailgate release button inside the handle while the tailgate is opening or closing, it will stop moving. You need to open or close it the rest of the way manually.

The tailgate has sensors on both sides. Be careful not to damage them. If the sensors are damaged, the power tailgate does not function properly.

*CONTINUED*

If you try to drive off with the tailgate open, a beeper sounds and a "TAILGATE OPEN" message is shown on the multi-information display.

Keep the tailgate closed at all times while driving to avoid damaging the tailgate and to prevent exhaust gas from getting into the interior. See **Carbon Monoxide Hazard** on page 58.

If there is a problem in the power tailgate system, you will see a "CHECK POWER TAILGATE" message on the multi-information display. Have the system checked by your dealer.

With this message shown on the multi-information display, you can still open or close the tailgate manually.

## Unlocking the Tailgate

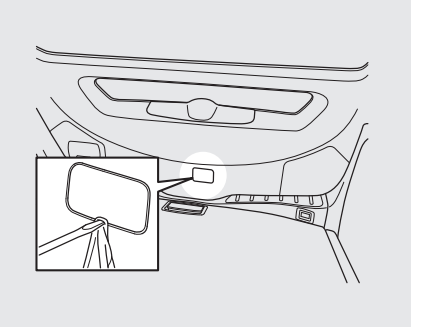

If the power door lock system cannot unlock the tailgate, open it manually.

Place a cloth on the cover to prevent scratches, then use a small flat-tip screwdriver to remove the cover on the back of the tailgate.

Push the release lever to the right as shown.

If you need to open the tailgate manually, it means there is a problem with the tailgate. Have the vehicle checked by your dealer.

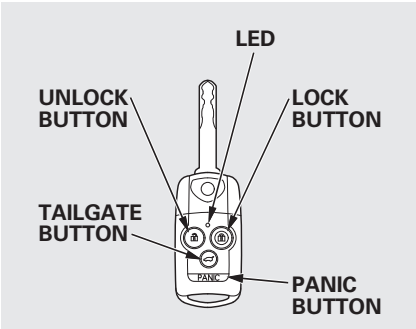


*On models without keyless access system*

**LOCK** – Press this button once to lock all doors and the tailgate. Some exterior lights will flash. When you push LOCK twice within 5 seconds, you will hear a beep to verify that the doors and tailgate are locked and the security system has set. This button does not work if any door or tailgate is open or if the key is in the ignition switch.

**UNLOCK** – Press this button once to unlock the driver's door (or all the doors and the tailgate depending on the door lock setting). Press it twice to unlock the other doors and the tailgate. Some exterior lights will flash twice when you press the button. If you do not open any door or the tailgate within 30 seconds, they will automatically relock and the security system sets.

The door activated spotlights come on when you press the UNLOCK button if the door activated position is selected by pressing the light control button (DOOR). If you do not open any door within 30 seconds (or whatever setting of the interior light dimming time is set to), the light(s) will fade out. If you relock the doors with the remote transmitter before 30 seconds have elapsed, the light(s) will go off immediately.

On the keyless lock acknowledgment, you can deactivate the beep on locking and flashing of the lights (see page 133).

To change the lock/unlock setting and the relock timer setting, refer to the customized settings on page 128.

You can also open all power windows, panoramic glass roof, and sunshade from outside the vehicle with the remote transmitter (see page 172).

*CONTINUED*

**TAILGATE** – All doors must be unlocked to operate the power tailgate. Press and hold the TAILGATE button to open or close the power tailgate. When the tailgate begins to move, you will hear a beep, and some front and rear lights will flash.

If you push the same button again while the tailgate is opening or closing, three beeps sound, the tailgate stops moving, reverses direction and stops in the fully opened or fully closed position.

**PANIC** – Press and hold this button for about 1 second to attract attention; the horn will sound, and the exterior lights will flash for about 30 seconds. To cancel panic mode, press any other button on the remote transmitter, or turn the ignition switch to the ON (II) position. Panic mode does not work when the key is in the ignition switch.

***Remote Transmitter Care***

- Avoid dropping or throwing the transmitter.
- Protect the transmitter from extreme temperature.
- Do not immerse the transmitter in any liquid.
- If you lose a transmitter, the replacement needs to be reprogramed by your dealer.

**Replacing the Transmitter Battery**

If it takes several pushes on the button to lock or unlock the doors and the tailgate, replace the battery as soon as possible.

Battery type: CR1616

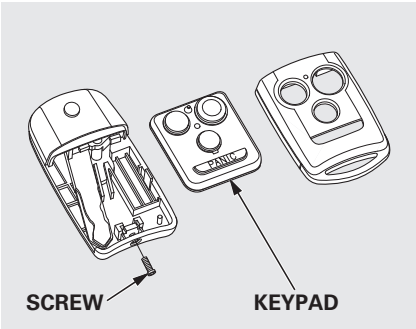


To replace the battery:

1. Remove the screw at the base of the transmitter with a small Phillips-head screwdriver.

   **NOTE:** Be careful when removing this screw as the head of the screw can strip out.

2. Separate the keypad from the transmitter by pushing any button from outside.

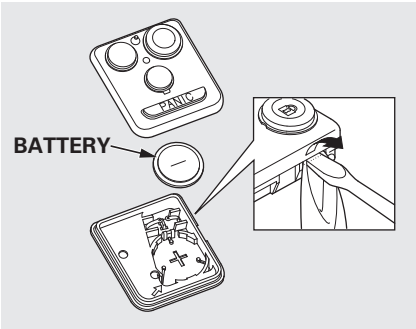


3. Place a cloth on the edge of the keypad to prevent scratches, and remove the upper half by carefully prying on the edge with a small flat-tip screwdriver.

4. Remove the old battery and note the polarity. Make sure the polarity of the new battery is the same (− side facing up), then insert it in the keypad.

   An improperly disposed of battery can hurt the environment. Always confirm local regulations for battery disposal.

5. Snap the two halves of the keypad, then install the parts in reverse order.

*CONTINUED*

*As required by the FCC:*
*This device complies with Part 15 of the FCC rules. Operation is subject to the following two conditions: (1) This device may not cause harmful interference, and (2) this device must accept any interference received, including interference that may cause undesired operation.*

*Changes or modifications not expressly approved by the party responsible for compliance could void the user's authority to operate the equipment.*

*This device complies with Industry Canada Standard RSS-210.*
*Operation is subject to the following two conditions: (1) this device may not cause interference, and (2) this device must accept any interference that may cause undesired operation of the device.*

## Recalling a Memorized Driving Position

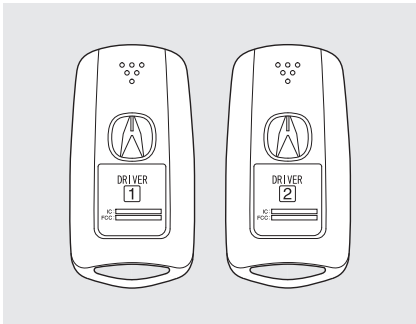


When you unlock the driver's door with your remote transmitter, each remote transmitter activates the keyless memory settings related to that remote transmitter.

The driving position memory activated (Driver 1, Driver 2) is shown on the back of each transmitter. Make sure you store your desired driving position in the memory that is activated by the transmitter you normally carry.

Here are the settings activated with the remote transmitter:

- Customized settings (see page 94).
- Driving position memory (see page 180).
- Audio system settings (see page 277).
- Climate control settings (see page 221).

When you unlock and open the driver's door with the remote transmitter, the driver's seat (except the power lumbar feature) and outside mirrors start to move to the positions stored in memory. The indicator in the related memory button to the remote transmitter comes on.

The steering wheel will move to the stored position when you insert the key into the ignition switch.

You will also see the “DRIVER 1” or “DRIVER 2” message on the multi-information display, depending on which linked remote transmitter is used.

## Front Seat Power Adjustments

*See pages 14 – 15 for important safety information and warnings about how to properly position the seats and seat-backs.*

The controls for the power adjustable front seats are on the outside edge of each seat bottom. You can adjust the seats with the ignition switch in any position. Make all seat adjustments before you start driving.

The passenger seat has the same adjustments as the driver's seat but without any lumbar adjustment.

Models equipped with the keyless access system have an engine start/stop button instead of an ignition switch. VEHICLE OFF (LOCK) mode is the equivalent of LOCK (0); ACCESSORY mode is the equivalent of ACCESSORY (I); and ON mode is the equivalent of ON (II). See page 196 for ignition switch and power mode comparison.

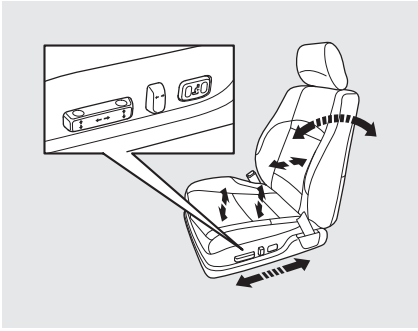

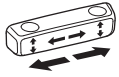

Moves the seat forward and backward.

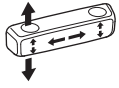

Moves the front of the seat up or down.

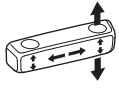

Raises or lowers the seat.

*CONTINUED*

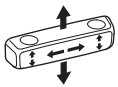

Moves the whole seat up and forward, or down and backward. The front of the seat also tilts up or down at the same time.

Adjusts the seat-back angle forward or backward.

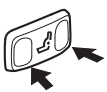

Increases or decreases the lumbar support. (Driver's seat only)

The driver's seat includes a memory feature. Two seat positions can be stored in separate memories. You can then select a memorized position by pushing the appropriate memory button. Refer to page 180 for how to memorize and select the seat positions.

## Head Restraints

*See page 15 for important safety information and a warning about improperly positioning head restraints.*

Your vehicle is equipped with head restraints in all seating positions to help protect you and your passengers from the likelihood of whiplash and other injuries.

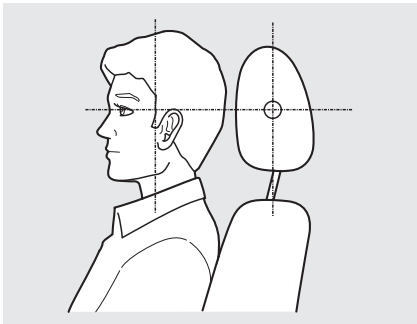

They are most effective when you adjust them so the center of the back of the occupant's head rests against the center of the restraint.

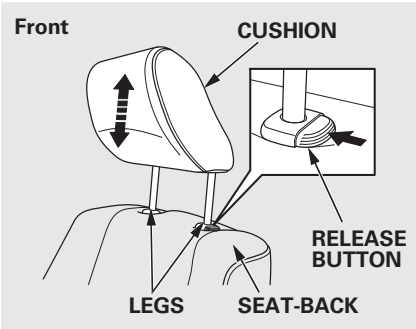


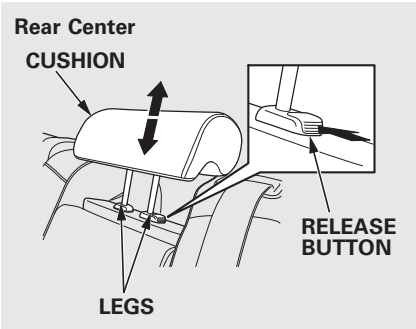


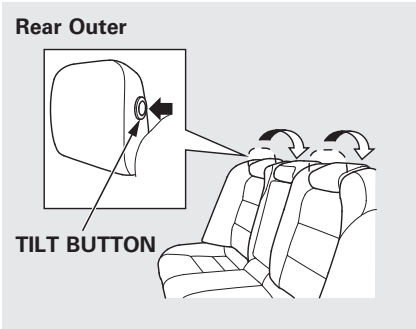


***Adjusting the Head Restraint***

The head restraints adjust for height. You need both hands to adjust the restraint. Do not attempt to adjust it while driving. To raise it, pull upward. To lower the restraint, push the release button sideways, and push the restraint down.

To lower either rear outer head restraint for better visibility, press the tilt button on the side of the head restraint. It folds down backward. To raise the rear outer head restraint, pull it up from the rear by hand. Make sure the head restraint locks in position when you lower or raise it.

*CONTINUED*

***Removing the Head Restraint***
To remove a front or rear center head restraint for cleaning or repair, pull it up as far as it will go. Push the release button, then pull the restraint out of the seat-back.

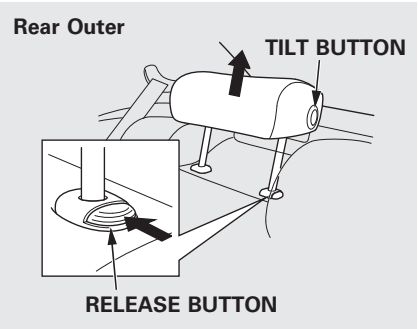


If for some reason you need to remove the rear outer head restraint, push the tilt button, then fold the head restraint backward. Push the release button, then pull the restraint out of the seat-back.

**⚠WARNING**

Failure to reinstall the head restraints can result in severe injury during a crash.

Always replace the head restraints before driving.

When reinstalling a head restraint, put the legs back in place. Then adjust it to the appropriate height while pressing the release button.

Make sure the head restraint locks in position when you reinstall it.

### *Active Head Restraints*

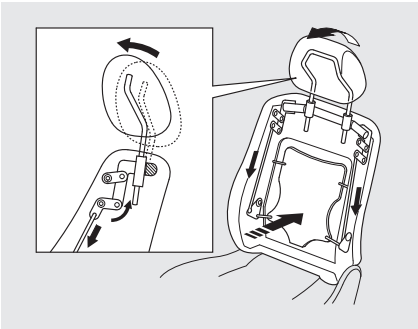

The driver's and front passenger's seats have active head restraints. If the vehicle is struck severely from the rear, the occupant properly secured with the seat belt will be pushed against the seat-back and the head restraint will automatically move forward.

This reduces the distance between the restraint and the occupant's head. It also helps protect the occupants against the likelihood of whiplash and injuries to the neck and upper spine.

After a collision, the activated restraint should return to its normal position.

If the restraints do not return to their normal position, or in the event of a severe collision, have the vehicle inspected by an Acura dealer.

For a head restraint system to work properly:

- Do not hang any items on the head restraints, or from the restraint legs.
- Do not place any object between an occupant and the seat-back.
- Install each restraint in its proper location.
- Only use genuine Acura replacement head restraints.



*CONTINUED*

**Folding the Rear Seats**
The left and right halves can be folded separately.

Remove any items from the seats before folding the seat-backs.

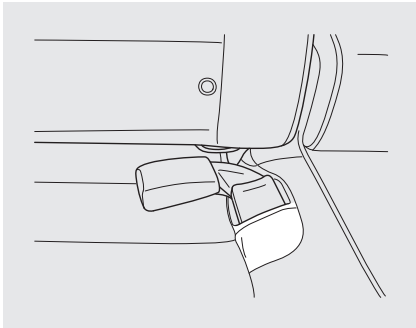

1. Store the center seat belt buckle into the pocket in the rear seat-back.

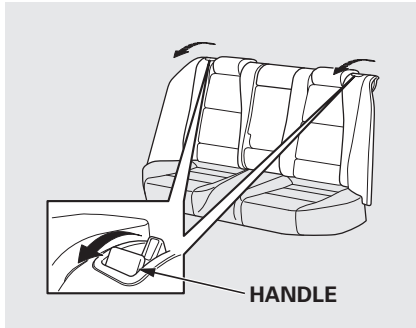


2. Lower the head restraints to their lowest positions.
3. Unlock the seat-back by pulling up the handle on the outer side of each rear seat-back.
4. Fold the seat-back forward.

Reverse this procedure to return the seat-back to the upright position. Pull on the seat-back to make sure it is latched. If the seat-back is not latched fully, the seat belt will not work properly and you will see the red indicator behind the handle as shown.

Do not put any heavy items on the seat-back when it is folded down.

Make sure that the folded seat-back does not press against the front passenger's seat, as this could cause the weight sensors to work improperly.

Make sure the seat-back and seat cushion are locked securely and all rear shoulder belts are positioned in front of the rear seat-backs.

Make sure all items in the cargo area are secured. Loose items can fly forward and cause injury if you have to brake hard (See **Carrying Cargo** on page 465).

## Front Seat Heaters

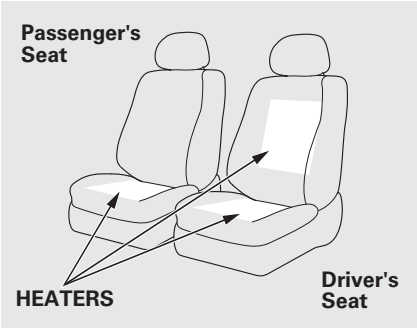


*On models without adaptive cruise control (ACC)*
Both front seats are equipped with seat heaters. Because of the sensors for the side airbag cutoff system, there is no heater in the passenger's seat-back. The ignition switch must be in the ON (II) position to use the heaters.

Models equipped with the keyless access system have an engine start/stop button instead of an ignition switch. ON mode is the equivalent of ON (II). For more information, see pages 194 and 196.

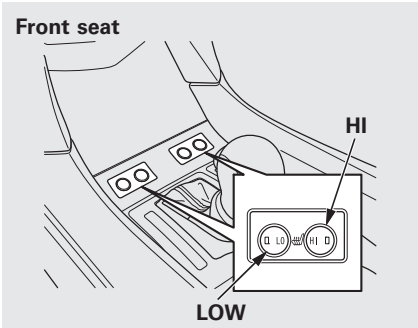


Push the right side of the switch, HI, to rapidly heat up the seat. After the seat reaches a comfortable temperature, select LO by pushing the left side of the switch. This will keep the seat warm.

*CONTINUED*

In the HI setting, the heater turns off when the seat gets warm, and turns back on after the seat's temperature drops.

In the LO setting, the heater runs continuously. It does not cycle with temperature changes.

Follow these precautions when using the seat heaters:

- Use the HI setting only to heat the seats quickly, because it draws large amounts of current from the battery.
- If the engine is left idling for an extended period, do not use the seat heaters even on the LO setting. It can weaken the battery, causing hard starting.

A multi-information display message may inform you when the battery charge is getting low. See page 85 for more information.

## Front Seat Heaters and Seat Ventilation

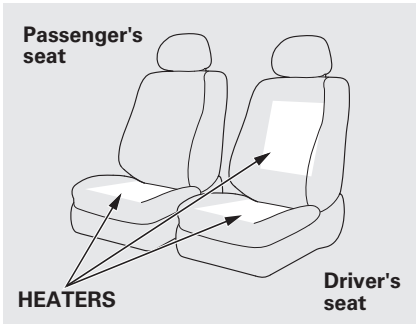


*On models with adaptive cruise control (ACC)*

Both front seats are equipped with seat heaters and an air ventilation system. The passenger seat only has heaters in the seat bottom because of the side airbag system.

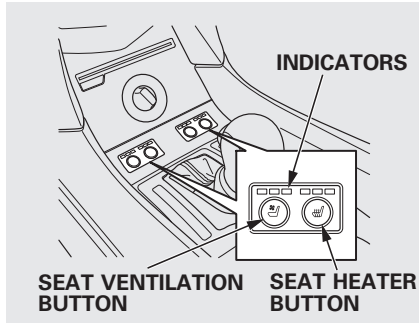


You must select the ON mode by operating the engine start/stop button (see page 194) to use the heaters and the air ventilation system.

To use the heaters, press the seat heater button. The indicator (red) next to the button will come on. There are four settings in the heaters:
HI – Three indicators on.
MID – Two indicators on.
LO – One indicator on.
OFF – All indicators off.

When you press the seat heater button once, the heater is set to HI. After the seat reaches a comfortable temperature, select MID or LOW by pressing the seat heater button. This will keep the seat warm. To shut down the heater, press the seat heater button until the indicators go off.

To ventilate the seat, press the seat ventilation button. The indicator (blue) next to the button will come on. The air ventilation system has four settings:

HI – Three indicators on.
MID – Two indicators on.
LO – One indicator on.
OFF – All indicators off.

When you press the seat ventilation button once, the system is set to HI. To change to the lower mode, press the seat ventilation button. To turn the air ventilation off, press the seat ventilation button until the indicators go off.

Follow these precautions whenever you use the seat heaters and the seat ventilation:

- Use the HI setting only to heat or to ventilate the seats quickly, because it draws large amounts of current from the battery.
- If the engine is left idling for an extended period, do not use the seat heaters or the seat ventilation, even on the LO setting. It can weaken the battery, causing hard starting.

A multi-information display message may inform you when the battery charge is getting low. See page 85 for more information.

# Rear Seat Heaters (Canadian models)

The outer rear seat cushions are equipped with seat heaters.

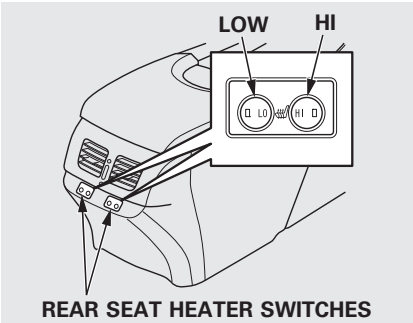

REAR SEAT HEATER SWITCHES

The rear seat heater switches are located under the rear vents. The left (right) switch controls the seat heaters on left (right) outer seating position.

The ignition switch must be in the ON (II) position to use seat heaters.

Models equipped with the keyless access system have an engine start/stop button instead of an ignition switch. ON mode is the equivalent of ON (II). For more information, see pages 194 and 196.

Push the right side of the switch, HI, to rapidly heat up the seat. After the seat reaches a comfortable temperature, select LO by pushing the left side of the switch. This will keep the seat warm.

In the HI setting, the heater turns off when the seat gets warm, and turns back on after the seat's temperature drops.

In the LO setting, the heater runs continuously. It does not cycle with temperature changes.

Follow these precautions whenever you use the seat heaters:

- Use the HI setting only to heat the seats quickly, because it draws large amounts of current from the battery.
- If the engine is left idling for an extended period, do not use the seat heaters even on the LO setting. It can weaken the battery, causing hard starting.

A multi-information display message may inform you when the battery charge is getting low. See page 85 for more information.

## Power Windows

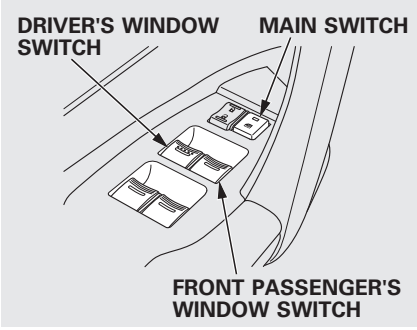


Turn the ignition switch to the ON (II) position to raise or lower any window. To open a window, push the switch down and hold it. Release the switch when you want the window to stop. Pull back on the switch and hold it to close the window.

Models equipped with the keyless access system have an engine start/stop button instead of an ignition switch. ON mode is the equivalent of ON (II). For more information, see pages 194 and 196.

**⚠WARNING**

Closing a power window on someone's hands or fingers can cause serious injury.

Make sure your passengers are away from the windows before closing them.

**AUTO** – To open either front window fully, push the window switch firmly down to the second detent, then release it. The window automatically goes down all the way. To stop the window from going all the way down, pull back on the window switch briefly.

*CONTINUED*

To close either front window fully, pull back the window switch firmly to the second detent, then release it. The window automatically goes all the way up. To stop the window from going all the way up, push down on the window switch briefly.

When you push the main switch in, the switch is off, and the passengers' windows cannot be raised or lowered. To cancel this feature, push on the switch again to get it to pop out. Use the main switch when you have children in the vehicle so they do not injure themselves by operating the windows unintentionally.

The windows and the main switch will operate for up to 10 minutes after you turn off the ignition switch (set VEHICLE OFF mode on models with keyless access system). Opening either front door cancels this function.

**AUTO REVERSE** – If either front window senses any obstacle while it is closing automatically, it will reverse direction and then stop. To close the window, remove the obstacle, then use the window switch again.

Auto reverse stops sensing when the window is almost closed. You should always check that all passengers and objects are away from the window before closing it.

### Opening the Windows, Panoramic Glass Roof, and Sunshades with the Remote Transmitter/Keyless Access Remote

You can open all of the windows, panoramic glass roof, and sunshades from outside with the remote transmitter/keyless access remote.

1. Press the UNLOCK button once to unlock the driver's door.
2. Press the UNLOCK button a second time, and hold it. All the doors unlock, and all four windows, panoramic glass roof, and sunshades start to open. To stop the windows and panoramic glass roof, release the button.

   The sunshades will not stop opening and will continue moving to the full open position.

3. To open the windows and panoramic glass roof further, press the button again (within 20 seconds of step 1) and hold it. If the windows and panoramic glass roof stop before the desired position, repeat steps 1 and 2.

You cannot close the windows, panoramic glass roof, and sunshades with the remote transmitter/keyless access remote.

**Opening/Closing the Windows, Panoramic Glass Roof, and Sunshades with the Key or the Built-in Key**

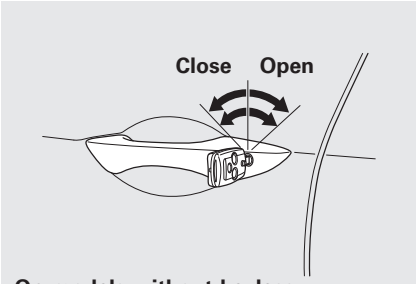


**On models without keyless access system**

You can open and close the windows, panoramic glass roof, and sunshades with the key in the driver's door lock.

To open:

1. Insert the key in the driver's door lock.
2. Turn the key clockwise, then release it.
3. Turn the key clockwise again, and hold it. All four windows, panoramic glass roof, and sunshades start to open. To stop the windows and panoramic glass roof release the key. The sunshades will not stop opening and will continue moving to the full open position.
4. To open the windows and panoramic glass roof further, turn and hold the key again (within 20 seconds of step 2).

*CONTINUED*

To close:

1. Insert the key in the driver's door lock.
2. Turn the key counterclockwise, then release it.
3. Turn the key counterclockwise again, and hold it. All four windows and panoramic glass roof start to close. The sunshades will start to close about 1 second after the panoramic glass roof has fully closed. To stop the windows, panoramic glass roof, and sunshades, release the key.
4. To close the windows, panoramic glass roof, and sunshades further, turn and hold the key again (within 20 seconds of step 2).

   Auto reverse does not work when closing the windows, panoramic glass roof, and sunshades with the key.

**NOTE:** If the windows, panoramic glass roof, and sunshades stop before the desired position, repeat steps 2 and 3.

## Panoramic Glass Roof

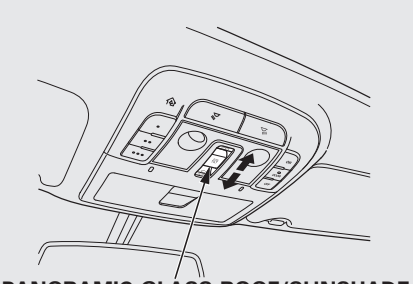

PANORAMIC GLASS ROOF/SUNSHADE SWITCH

You must turn the ignition switch to the ON (II) position to operate the panoramic glass roof and the sunshades.

Use the switch on the front ceiling to operate the panoramic glass roof and the sunshades.

The panoramic glass roof can be tilted up in the back for ventilation, or it can be slid back to open.

The panoramic glass roof can operate only when the sunshades are fully open.

The sunshades can be opened or closed to adjust the amount of light that enters the cabin.

The sunshades can operate only when the panoramic glass roof is fully closed.

The front and rear sunshades cannot be operated individually.

Models equipped with the keyless access system have an engine start/stop button instead of an ignition switch. ON mode is the equivalent of ON (II). See page 196 for ignition switch and power mode comparison.

To tilt up the panoramic glass roof, push on the center of the panoramic glass roof switch. The sunshades will open automatically and the panoramic glass roof will start to tilt up. To stop the panoramic glass roof from tilting up fully, push the switch briefly.

To open the panoramic glass roof or the sunshades, pull back on the switch and hold it. Release the switch when the panoramic glass roof or the sunshades reach the desired position. To close the panoramic glass roof or the sunshades, push the switch forward and hold it. Release the switch to stop the operation.

**⚠WARNING**

Opening or closing the panoramic glass roof or sunshades on someone's hands or fingers can cause serious injury.

Make sure all hands and fingers are clear of the panoramic glass roof and sunshades before opening or closing it.

**AUTO OPEN** – To open the panoramic glass roof or the sunshades fully, pull back the switch firmly to the second detent, then release it. The sunshades will automatically open all the way. Pull the switch back firmly a second time, then release it. The panoramic glass roof will automatically open all the way. To stop the panoramic glass roof or the sunshades from opening, push the switch briefly.

*CONTINUED*

You can open and close the panoramic glass roof and sunshade for up to 10 minutes after you turn off the ignition switch , or on models with keyless access system, set the power mode to VEHICLE OFF (LOCK). Opening either front door cancels this function.

**NOTICE**

*If you try to open the panoramic glass roof in below-freezing temperatures, or when it is covered with snow or ice, you can damage the panoramic glass roof panel or its motor.*

You can use the remote transmitter/ keyless access remote or the key/ built-in key to operate the panoramic glass roof and sunshade from the outside. Refer to page 172 for details.

## Parking Brake

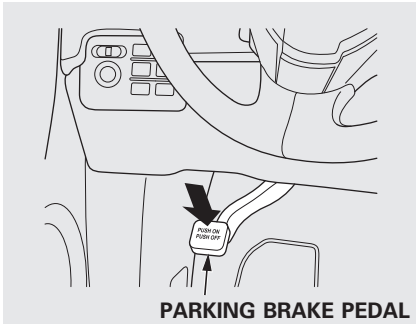


To apply the parking brake, push the pedal down with your foot. To release it, push on the pedal again. The parking brake indicator on the instrument panel should go out when the parking brake is fully released (see page 66).

If you drive without releasing the parking brake, a beeper will sound, and you will also see a “RELEASE PARKING BRAKE” message on the multi-information display (see page 90).

**NOTICE**

*Driving the vehicle with the parking brake applied can damage the rear brakes and axles. A beeper will sound if the vehicle is driven with the parking brake on.*

Keep the inside and outside mirrors clean and adjusted for best visibility. Be sure to adjust the mirrors before you start driving.

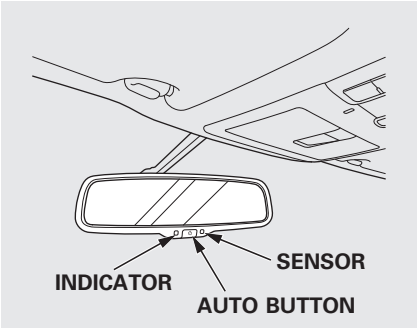


The inside mirror can automatically darken to reduce glare. To turn on this feature, press the button on the bottom of the mirror. The AUTO indicator comes on as a reminder. When it is on, the mirror darkens when it senses the headlights of a vehicle behind you, then returns to normal visibility when the lights are gone. Press the button again to turn off this feature.

*On models without navigation system*

When you shift to reverse with the ignition switch in the ON (II) position, the rear view is shown on the left side of the inside mirror. For more information, see page 451.

**NOTICE**

*There is also a sensor on the back of the mirror. Items hung on the mirror may block this sensor and affect its performance.*

*CONTINUED*

## Adjusting the Power Mirrors

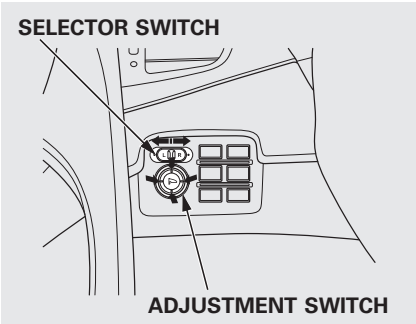


1. Turn the ignition switch to the ON (II) position.
2. Move the selector switch to L (driver's side) or R (passenger's side).
3. Push the appropriate edge of the adjustment switch to move the mirror right, left, up, or down.
4. When you finish, move the selector switch to the center (off) position. This turns the adjustment switch off to keep your settings.

Models equipped with the keyless access system have an engine start/stop button instead of an ignition switch. ON mode is the equivalent of ON (II). See page 196 for ignition switch and power mode comparison.

### Reverse Tilt Door Mirror

Both outside door mirrors have a reverse tilt feature. When in reverse, the selected mirror will tilt down slightly to improve your view as you parallel park. Shifting out of reverse will return the mirror to its original position.

- To tilt the driver's mirror, place the selector switch in the left position.
- To tilt the passenger's mirror, place the switch in the right position.
- To turn the feature off, place the switch in the center position.

Outside mirror positions can be stored in the driving position memory system (see page 180).

## Heated Power Mirrors

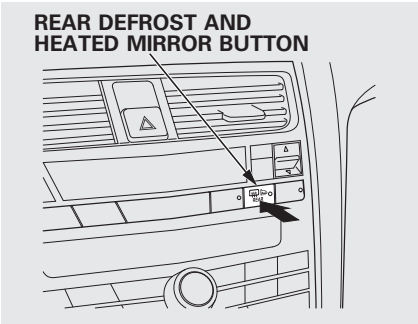


The outside mirrors are heated to remove fog and frost. With the ignition switch in the ON (II) position, turn on the heaters by pressing the button. The indicator in the button comes on as a reminder. Press the button again to turn the heaters off. Pressing this button also turns the rear window defogger on and off.

This heated mirror function has a timer (see page 143).

Models equipped with the keyless access system have an engine start/stop button instead of an ignition switch. ON mode is the equivalent of ON (II). See page 196 for ignition switch and power mode comparison.

# Driving Position Memory System

Your vehicle has a memory feature for the steering wheel, driver's seat, and outside mirror positions.

Seat, except for power lumbar, steering wheel and outside mirror positions can be stored in separate memories. You select a memorized position by pushing the appropriate button or using the appropriate remote transmitter or the keyless access remote (Driver 1 or Driver 2).

**Storing a Driving Position in Memory**

Store a driving position only when the vehicle is parked.

1. Turn the ignition switch to the ON (II) position. You cannot add a new driving position to the memory unless the ignition switch is in the ON (II) position. You can recall a memorized position with the ignition switch in any position.

   Models equipped with the keyless access system have an engine start/stop button instead of an ignition switch. ON mode is the equivalent of ON (II). See page 196 for ignition switch and power mode comparison.

2. Adjust the seat to a comfortable position (see page 161).
   Adjust the steering wheel to a comfortable position (see page 145).
   Adjust the outside mirrors for best visibility (see page 178).

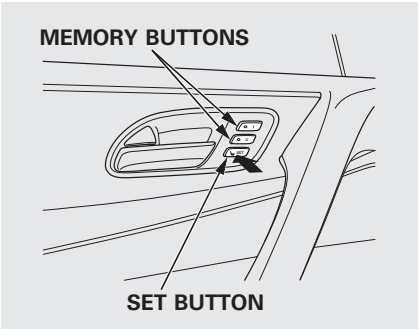


3. Press and release the SET button on the door. You will hear a beep. Immediately press and hold one of the memory buttons (1 or 2) until you hear two beeps. The indicator in the memory button will come on. The current positions of the driver's seat, steering wheel, and outside mirrors are now stored.

Doing any of the following after pressing the SET button will cancel the storing procedure.

- Not pressing a memory button within 5 seconds.
- Readjusting the seat or steering wheel position.
- Readjusting the outside mirror position.

*On models without keyless access system*

- Turn the ignition switch out of the ON (II) position.

*On models with keyless access system*

- Change the power mode from ON.

Each memory button stores only one driving position. Storing a new position erases the previous setting stored in that button's memory. If you want to add a new position while retaining the current one, use the other memory button.



*CONTINUED*

**Selecting a Memorized Position**
To select a memorized position, do this:

1. Make sure the shift lever is in Park.
2. Press the desired memory button (1 or 2) until you hear a beep, then release the button.

The system will move the seat, steering wheel, and outside mirrors to the memorized positions. The indicator in the selected memory button will flash during movement. When the adjustments are complete, you will hear two beeps, and the indicator will remain on.

To change the “MEMORY POSITION LINK” setting, see page 115.

To stop the system's automatic adjustment, do any of these actions:

- Press any button on the control panel: SET, 1, or 2.
- Push any of the adjustment switches for the seat or steering wheel.
- Shift out of Park.
- Adjust the outside mirrors.

If desired, you can use the adjustment switches to change the positions of the seat, steering wheel or outside mirrors after they are in their memorized position. If you change the memorized position, the indicator in the memory button will go out. To keep this driving position for later use, you must store it in the driving position memory.

*On models with navigation system*
Your vehicle has a keyless access system. This system allows you to operate the vehicle without an ignition key. When you carry the remote with you, you can lock/unlock the door(s), unlock the tailgate, and start the engine.

The system may not work if:

- The battery of the remote is weak.
- There is strong electrical current nearby.
- You carry a cell phone, a laptop computer, or other electrical device near the remote.
- The remote is covered by metal.
- A vehicle is being operated with a transmitter nearby.
- When the remote battery is dead.
- When the vehicle battery is dead.

Each keyless access remote has the built-in key. This key is used to lock/unlock the doors when the remote battery becomes weak and the power door lock/unlock operation is disabled. You cannot start the engine with this key.

Make sure the driver always carries the remote/built-in key set.

Protect the remote and the built-in key from direct sunlight, high temperature, and high humidity.

Do not drop the remote or the built-in key, and do not set heavy objects on them.

Keep the remote and the built-in key away from liquids. If they get wet, dry them immediately with a soft cloth.

The built-in keys do not contain batteries.

Always keep the remote and the built-in key away from any magnetic material.

You should have received a key number tag with your built-in key. You will need this key number if you ever have to get a lost key replaced. Use only Acura-approved key blanks.



*CONTINUED*

## Keys

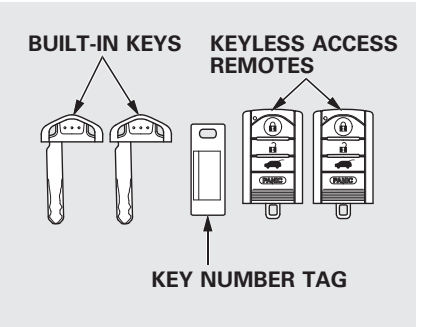


The following keys come with your vehicle. Refer to page 207 for how to separate the keys.

***Built-in Key***
This key is used to lock/unlock the doors and glove box.

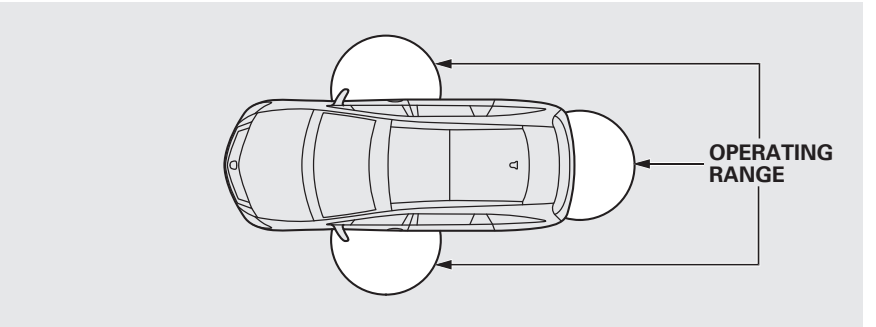


***Keyless Access Remote***
This remote is used to lock/unlock the doors and unlock the tailgate. When you carry the remote, you can lock/unlock the doors, unlock the tailgate, and start the engine.

You can lock/unlock the doors within about a 32 inch (about 80 cm) radius from the outside door handle. You can open the tailgate within about a 32 inch (about 80 cm) radius from the tailgate release switch.

Anyone can lock/unlock a door or open the tailgate if the remote is within the operating range of the door or the tailgate.

The remote may not work if:

- It is too close to the vehicle.
- It is above or below the vehicle, even when it is within its operating range.

Each front door has a LOCK/ UNLOCK feature.

**Unlocking the Door(s)**

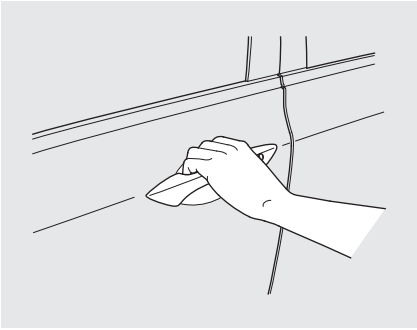

The handle of each front door has a sensor. That sensor works with the remote so you can automatically unlock the door(s).

By default, only the driver's door unlocks when you grab its handle.

To unlock the remaining doors and the tailgate, press the UNLOCK button on the remote or the rear of the master door lock switch on the driver's door.

To change the “DOOR UNLOCK MODE” setting, see page 119.

All the doors unlock when you grab the handle of the front passenger's door.

When you unlock the door(s), some exterior lights blink twice and the system beeps twice.

To change the “KEYLESS ACCESS LIGHT FLASH” setting, see page 120.

To change the “KEYLESS ACCESS BEEP” setting, see page 121.

If you wear a glove while grabbing a front door handle, the door sensor may be slow to respond or may not respond by unlocking the doors.

*CONTINUED*

If you do not open any of the doors within 30 seconds, they will automatically relock.

To change the “SECURITY RELOCK TIMER” setting, see page 134.

If a remote is within operating range while you wash your vehicle or when it is raining heavily, the door sensors may respond by unlocking the doors.

Each unlock sensor does not operate when:

- The remote is not within the operating range.
- The remote is too close to the vehicle.
- When the doors are unlocked.
- The remote battery is dead.
- The vehicle battery is dead.

## Locking the Doors

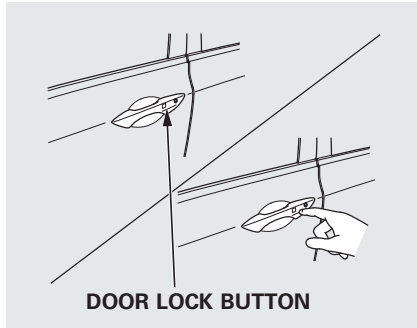


When you press the door lock button on the front door, all the doors and the tailgate will lock.

Before locking the doors, make sure the remote is not inside the vehicle.

When you lock the doors, some exterior lights blink and the system beeps once. If no exterior lights blink and/or no beeper sounds, check to see if the tailgate or hood is open.

To change the “KEYLESS ACCESS LIGHT FLASH” setting, see page 120.

To change the “KEYLESS ACCESS BEEP” setting, see page 121.

Within 2 seconds of pressing the door lock button to lock the doors or locking the doors with remote, pull the handle to make sure the doors are actually locked. The door unlock sensors will not operate for about 2 seconds after the doors are locked.

The door lock button does not work if:

- The remote is not within the operating range.
- Any door is open.
- The power mode is not set to VEHICLE OFF (LOCK).
- The remote is in the keyless access slot.
- The remote is too close to the vehicle.
- The remote battery is dead.
- The vehicle battery is dead.

***Door Lock Prevention***

If you open the driver's door, pull its lock tab rearward on the door, and shut it when the remote is inside the vehicle, the driver's door will unlock. Make sure you carry the remote with you when you lock the doors.

This function is also activated on the front passenger's door. If you open the front passenger's door, and shut it after pulling its lock tab rearward when the remote is inside the vehicle, all doors will unlock.

*CONTINUED*

### Locking and Unlocking the Tailgate

When you close the tailgate with all doors locked, the tailgate will lock.

When you unlock all the doors with the remote, built-in key or power door lock master switch, the tailgate will unlock.

The tailgate cannot be locked if:

- The remote is too close to the tailgate.
- The remote is inside the vehicle.

When you pull the tailgate release switch while the doors are locked and you are carrying the remote, all the doors unlock and the tailgate opens.

### Opening and Closing the Tailgate

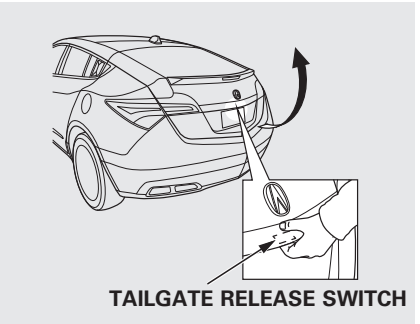


You can open the tailgate in any of these ways:

- Press the TAILGATE button on the remote.
- Pull the tailgate release switch (when carrying the remote if the doors are locked).

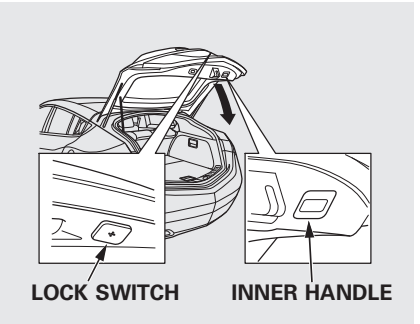


To close the tailgate, use the inner handle to pull it down, then press down on the back edge.

After closing, press the lock switch to lock all doors.

Before closing the tailgate, make sure the remote is not inside the vehicle.

If you close the tailgate when the remote is inside the vehicle, and all the doors are locked, the system beeps, and all the doors unlock.

Keep the tailgate closed at all times while driving to avoid damaging the tailgate, and to prevent exhaust gas from getting into the interior. See **Carbon Monoxide Hazard** on page 58.

**Keyless Access Remote**

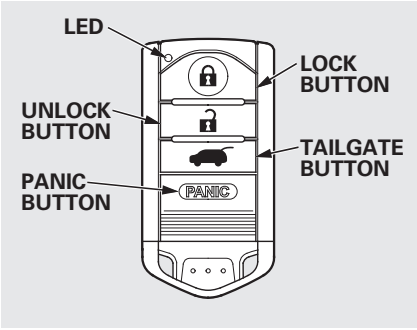


**LOCK** – Press this button once to lock all doors and the tailgate. Some exterior lights will flash. When you push the LOCK button twice within 5 seconds, you will hear a beep to verify that the doors and the tailgate are locked and the security system is set.

You cannot lock the doors or the tailgate if any door or the tailgate is open, if the remote is in the keyless access remote slot, or if the power mode is in any position except the VEHICLE OFF (LOCK).

When you cannot set the security system because the tailgate or hood is open, no exterior light blinks and/or no beeper sounds.



*CONTINUED*

**UNLOCK** – Press this button once to unlock the driver's door. Press it twice to unlock the other doors. Some exterior lights will flash twice each time you press the button. The door activated map lights (if the door activated light switch is set) will come on when you press the UNLOCK button. If you do not open any doors within 30 seconds, the map lights fade out. If you relock the doors with the remote before 30 seconds have elapsed, the lights will go off immediately.

To change the door unlock mode setting, see page 132.

To change the “INTERIOR LIGHT DIMMING TIME,” see page 124.

If you unlock the doors with the remote, but do not open any doors within 30 seconds, the doors automatically relock and the security system sets.

To change the “SECURITY RELOCK TIMER” setting, see page 134.

To change the “KEYLESS LOCK ACKNOWLEDGMENT” setting, see page 133.

**TAILGATE** – All doors must be unlocked to operate the power tailgate. Press and hold the TAILGATE button to open or close the power tailgate. When the tailgate begins to move, you will hear a beep, and some front and rear lights will flash.

If you push the same button again while the tailgate is opening or closing, three beeps sound, the tailgate stops moving, reverses direction and stops in the fully opened or fully closed position.

**PANIC** – Press this button for about 2 seconds to attract attention: the horn will sound and the exterior lights will flash for about 30 seconds. To cancel panic mode, press any other button on the remote.

## Replacing the Remote Battery

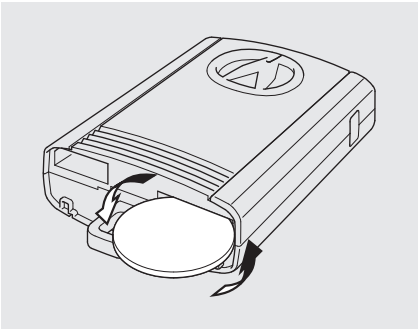

Replace the battery if necessary.
Battery type: CR2032

To replace the battery:

1. Remove the built-in key (see page 207).
2. Remove the upper half by carefully prying on the edge with a coin.

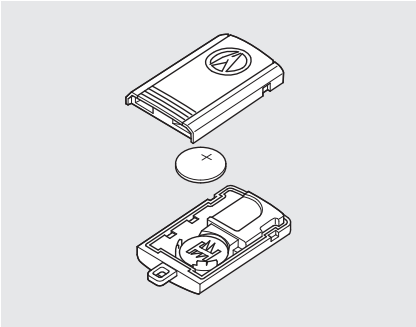

3. Replace the old battery with new battery. Place the battery so the + side is facing up. Snap the two halves of the remote case back together.

An improperly disposed of battery can hurt the environment. Always confirm local regulations for battery disposal.

*As required by the FCC:*
*This device complies with Part 15 of the FCC rules. Operation is subject to the following two conditions: (1) This device may not cause harmful interference, and (2) this device must accept any interference received, including interference that may cause undesired operation.*

*Changes or modifications not expressly approved by the party responsible for compliance could void the user's authority to operate the equipment.*

*This device complies with Industry Canada Standard RSS-210.*
*Operation is subject to the following two conditions: (1) this device may not cause interference, and (2) this device must accept any interference that may cause undesired operation of the device.*

*CONTINUED*

## Keyless Memory Setting™

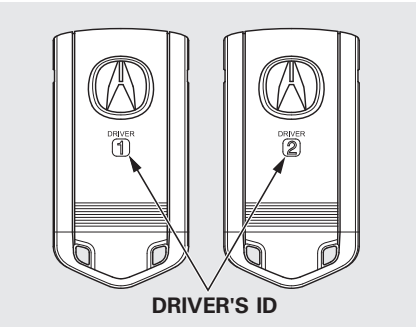


When you unlock the door with your remote, each remote activates the keyless memory settings related to that remote. The driver's ID (Driver 1 or Driver 2) is shown on the back of each remote.

Here are the settings activated with the remote:

- Driving position memory (see page 180).
- Keyless memory settings (see page 94).
- Audio system settings (see page 277).
- Climate control settings (see page 221).
- Navigation system preferences (see the navigation system manual).

***Remote Transmitter Care***

- Avoid dropping or throwing the transmitter.
- Protect the transmitter from extreme temperature.
- Do not immerse the transmitter in any liquid.
- If you lose a transmitter, the replacement needs to be reprogramed by your dealer.

### Engine Start/Stop Button Operating Range

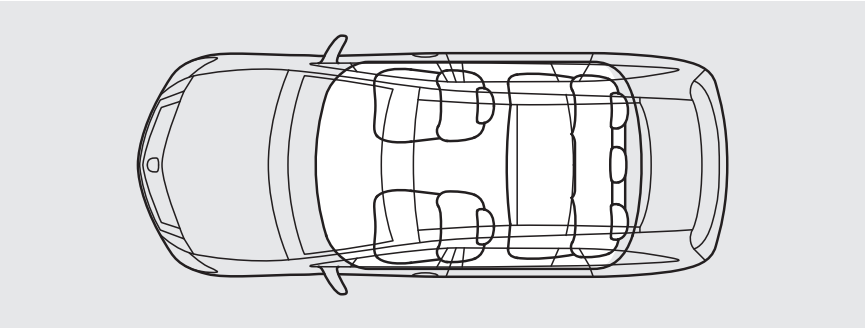

The engine may not run, and some malfunctions may occur, if the remote is outside the vehicle.

The engine may not start if the remote is subjected to strong radio waves.

Also, the engine may not start if the remote is too close to the windows.

**NOTICE**

*Make sure you know where the remote is when you are inside the vehicle.*

*Remember that you can start the engine when the remote is inside the vehicle.*

*Make sure you always carry the remote with you.*



*CONTINUED*

**Engine Start/Stop Button Operation**

This system uses the engine start/stop button instead of an ignition switch to start and stop the engine. If you are carrying the keyless access remote, you can start the engine by pressing the engine start/stop button with the brake pedal depressed. You can also stop the engine by pushing this button when the vehicle is stopped.

***Switching the Power Modes***

The keyless access system has four power modes: VEHICLE OFF (LOCK), ACCESSORY, ON, and START.

Each time you press the engine start/stop button while carrying the keyless access remote, the power mode switches between VEHICLE OFF (LOCK), ACCESSORY, and ON.

You can start the engine at any time by pressing the engine start/stop button, while pressing the brake pedal, with the shift lever in Park or neutral position.

***Changing the Power Mode without Starting the Engine***

To change the power mode without turning on the engine, press the engine start/stop button without pressing the brake pedal. The power mode will be changed as shown on the next page.

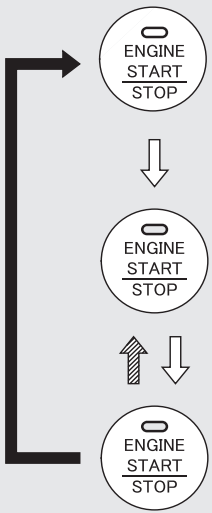


**VEHICLE OFF (LOCK)**
**Indicator in the button is off.**

**ACCESSORY**
**Indicator in the button comes on green.**
**Some electrical components such as the audio system and accessory power sockets can be operated.**

**ON**
**Indicator in the button remains green when the engine is not running.**
**(If the engine is running, this indicator is off.)**
**All electrical components can be used.**

**Do the following without pressing the brake pedal.**

⇨ **: Press the engine start/stop button.**
⇨ **: Press the engine start/stop button without the shift lever in P.**
➡ **: Shift to Park, then press the engine start/stop button.**

How the mode is switched depends on the shift lever position (with or without the shift lever in Park).

With the shift lever in Park, the power mode changes from ON to VEHICLE OFF (LOCK) when you push the start button.

To change the mode from ON to ACCESSORY with the shift lever position in Park, press the engine start/stop button twice.

To change the mode from ACCESSORY to OFF, shift to Park, then press the engine start/stop button twice.

**NOTE:** If the keyless access system main switch in the glove box is off, make sure to insert the keyless access remote into the keyless access slot to turn on your vehicle's power mode. For more information, refer to page 203.

*CONTINUED*

## Ignition Switch and Power Mode Comparison

| Ignition Switch Position | LOCK (0) | ACCESSORY (I) | ON (II) | START (III) |
|---|---|---|---|---|
| Without Keyless Access System | • Engine is turned off and power is shut down.<br>• The steering wheel is locked.<br>• No electrical components can be used. | • Engine is turned off.<br>• Some electrical components such as the audio system and accessory power sockets can be operated. | • Normal key position while driving.<br>• All electrical components can be used. | • Use this position to start the engine.<br>• The ignition switch returns to the ON (II) position when you release the key. |
| Power Mode | VEHICLE OFF (LOCK) | ACCESSORY | ON<br>Green OFF | START |
| With Keyless Access System and Engine Start/Stop Button | Indicator-Off<br>• Engine is turned off and power is shut down.<br>• The steering wheel is locked.<br>• No electrical components can be used. | Indicator-Green<br>• Engine is turned off.<br>• Some electrical components such as the audio system and accessory power sockets can be operated. | Indicator-Green (engine is turned off)<br>Off (engine is running)<br>• All electrical components can be used. | Indicator-Off<br>• The mode automatically returns to ON after the engine starts. |

## Starting the Engine

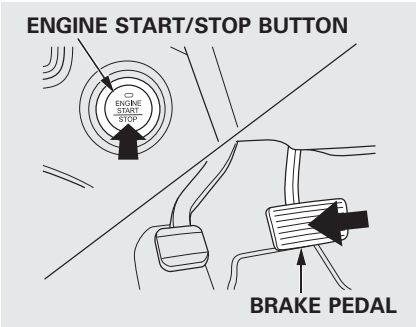


You can start the engine in any power mode.

To start the engine:

1. Move the shift lever to Park (P).
2. Depress the brake pedal and press the engine start/stop button.

### *Starting Guidance*

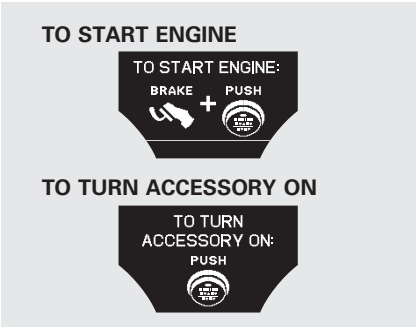


After you unlock and open the driver's door, you will see the “TO START ENGINE:” message on the multi-information display. The “TO TURN ACCESSORY ON:” message will be shown after three seconds. The display switches between the “TO START ENGINE:” and “TO TURN ACCESSORY ON:” messages every three seconds.

*When the keyless access system main switch in the glove box is off,* the “TO START ENGINE:” message will be shown after you insert the remote into the slot. Each time you press the engine start/stop button, the “INSERT KEYLESS REMOTE INTO SLOT” message is shown on the multi-information display.



*CONTINUED*

TO UNLOCK WHEEL

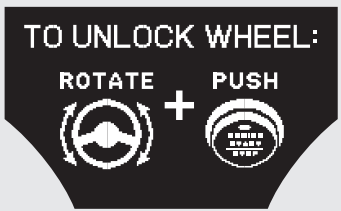


If the steering wheel is locked, the engine cannot start. The multi-information display shows you the above message and the indicator in the engine start/stop button blinks. To unlock the steering wheel, apply force by turning it left and right while pressing the engine start/stop button at the same time.

**NOTE:**
If the keyless access remote battery dies, you may have to use the built-in key to unlock/lock the vehicle. The built-in key is stored inside the keyless access remote (see page 207).

After entering the vehicle, insert the keyless access remote into the slot to start the engine (see page 205).

## Stopping the Engine

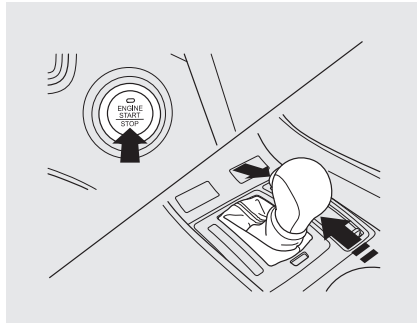


To turn the vehicle off when the vehicle is completely stopped, shift to Park (P), then press the engine start/stop button. The engine stops and the power mode switches from ON to VEHICLE OFF (LOCK).

*Operation Guidance*

SHIFT TO PARK

You can only place the vehicle in the VEHICLE OFF (LOCK) mode if the transmission is in Park. You will see the “SHIFT TO PARK” message on the multi-information display if you press the engine start/stop button to turn the vehicle off with the shift lever in any other position except P (Park).

ACCESSORY MODE

If the power mode is in ACCESSORY, the ACCESSORY MODE will appear.

TO TURN VEHICLE OFF

You will also see the “TO TURN VEHICLE OFF:” message on the multi-information display. Press the engine start/stop button twice to change the power mode from ACCESSORY to VEHICLE OFF (LOCK).

*CONTINUED*

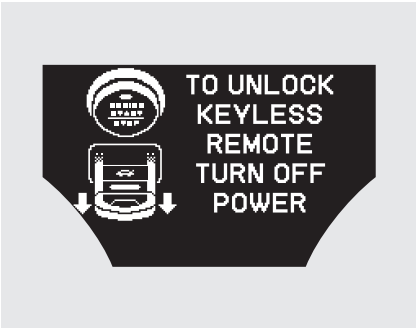


When the keyless access system main switch in the glove box is off, the “TO UNLOCK KEYLESS REMOTE TURN OFF POWER” message will be shown after shifting into Park.

Before leaving the vehicle, make sure it is in VEHICLE OFF (LOCK). You can verify if the power is off by checking the engine start/stop button LED indicator.

If you open the driver’s door in the ACCESSORY mode, a beeper will sound. You will also see a “TO TURN VEHICLE OFF:” message on the multi-information display.

Press the engine start/stop button twice with your foot off the brake pedal to change the power mode to VEHICLE OFF (LOCK).

***Emergency Engine Stop***

The engine start/stop switch may be used to stop the engine due to an emergency situation even while driving. If you must stop the engine, do either of the following operations:

- Press and hold the engine start/stop button for three seconds.
- Firmly press the engine start/stop button three times.

Do not press the switch while driving unless it is absolutely necessary for the engine to be switched off.

If you are driving, the power mode switches from ON to ACCESSORY or VEHICLE OFF (LOCK) whenever you perform either procedure. However, the steering wheel will NOT lock. If the vehicle is stopped and in Park, the power mode will change to OFF, however, the steering wheel may NOT lock.

If you cannot stop the engine by pressing the engine start/stop button once when the vehicle is stopped and the shift lever is in Park, do either emergency engine stop procedure. In this case, the power mode will change to VEHICLE OFF (LOCK), however, the steering wheel may NOT lock.

## Beeper and Message

***Keyless Remote Not Detected***

If you take the keyless access remote out of the vehicle and close the door with the power mode ON, the inside and outside beepers sound and a "KEYLESS REMOTE NOT DETECTED" message will be displayed on the multi-information display.

The displayed message goes away when you bring the remote back inside the vehicle, and close the door.

If the engine is running and you take the remote out of the vehicle, it will continue to run. Once the power mode is changed to VEHICLE OFF (LOCK), the engine will not restart until you bring back a remote into the vehicle.

The engine does not restart if you push the engine start/stop button to select the VEHICLE OFF (LOCK) mode when the remote is outside the vehicle. Check where the remote is. Make sure that you carry the remote with you when you operate the engine start/stop button.

*CONTINUED*

Even when the remote is inside the vehicle, the beeper may sound when the location of the remote is not detected due to surrounding conditions. It is not a failure. Make sure that you carry the remote with you.

The outside beeper sounds when the power mode is in ACCESSORY, and a door is opened, then closed.

***Keyless Remote Low Battery***

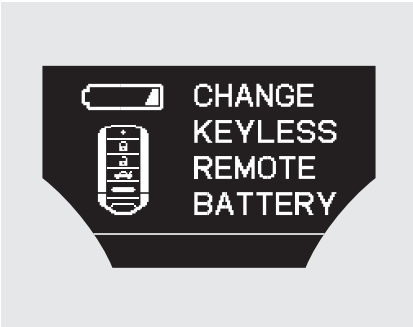


The battery in the remote normally lasts about 2 years. To ensure maximum battery life, do not store the remote close to electrical devices such as computers or TVs. When the multi-information display shows "CHANGE KEYLESS REMOTE BATTERY," replace the battery as soon as possible (see page 191).

If the remote battery becomes weak and the power door lock/unlock operation is disabled, you should insert the remote into the keyless access remote slot to set the power mode and start the engine. After inserting the remote to the slot, operate the engine start/stop button as previously described (see pages 194 and 195). For more information on the keyless access slot, see page 205.

Inserting the remote does not charge the remote battery. You should replace the battery as soon as possible.

### Keyless Access Remote System Main Switch

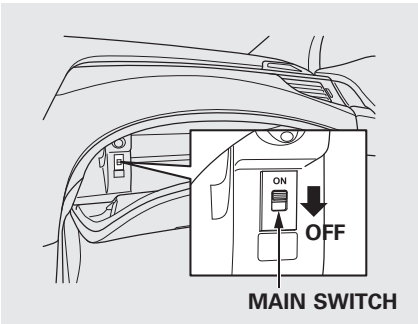


This switch is in the glove box. You can cancel the keyless access system features, which are locking/unlocking the doors, unlocking the tailgate, and starting the engine while carrying the keyless access remote. To cancel the system, turn the keyless access system main switch off by pushing it down.

**NOTE:** Turning off the keyless access system will disable lockout prevention.

With the keyless access remote system main switch off, you should insert the keyless access remote into the keyless remote slot to start the engine. For more information, see page 205.

### Keyless Access System Indicator

According to the message on the multi-information display, this indicator has two indications. A “CHECK KEYLESS ACCESS SYSTEM” message indicates a problem with the keyless access system. A “CHECK KEYLESS STARTING SYSTEM” message indicates a problem with the keyless starting system.

This indicator normally comes on for several seconds when you change the power mode to ON.

*CONTINUED*

### *Check Keyless Access System*

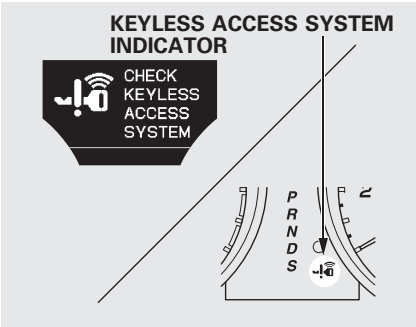


Have your vehicle checked by your dealer if:

- The keyless access system indicator comes on and stays on while you are driving.
- The indicator comes on after the engine has started.
- The multi-information display shows “CHECK KEYLESS ACCESS SYSTEM.”

In this case, use the built-in key to lock/unlock the doors and insert the keyless access remote into the slot to start the engine (see page 205).

### *Check Keyless Starting System*

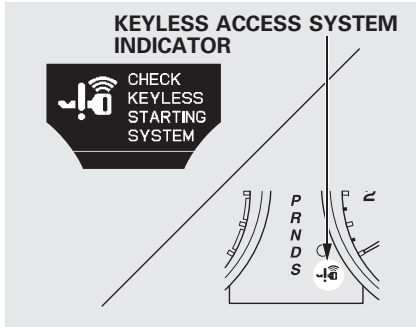


Have your vehicle checked by your dealer if:

- The keyless access system indicator comes on and stays on while you are driving.
- The indicator comes on and stays on in any power mode.

- The multi-information display shows “CHECK KEYLESS STARTING SYSTEM.”

In this case, you should not shut off your engine until you are in a safe location or at your dealer, as your vehicle may not restart.

## Keyless Access Remote Slot

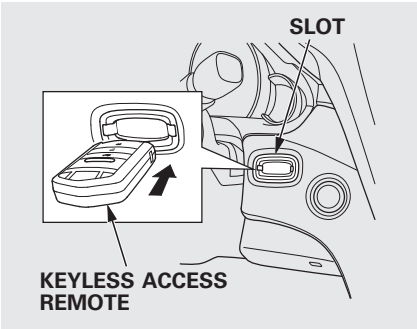


In the following two cases, you have to insert the keyless access remote into the keyless access remote slot to set the power mode and start the engine.

- If the remote battery becomes weak and the power door lock/ unlock operation is disabled.
- When the keyless access remote system main switch in the glove box is set to off.

To remove the keyless access remote, place the vehicle in the VEHICLE OFF (LOCK) mode, then pull out the keyless access remote.

To avoid damaging the slot, do not insert any other objects into the slot or put a sticker on the keyless access remote.

Inserting the remote does not charge the remote battery. If necessary, you should replace the battery as soon as possible.



*CONTINUED*

*Operation Guidance*

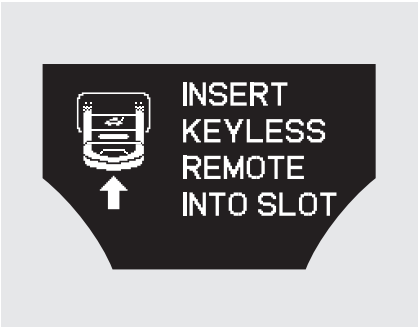


When you open the driver's door, and each time you press the engine start/stop button, you will see the "INSERT KEYLESS REMOTE INTO SLOT" message on the multi-information display in the following situations:

- When the keyless access system main switch (see page 203) is off.
- When the keyless access remote is not in the vehicle.

If you turn off the vehicle and leave the remote in the keyless access remote slot, you will hear a reminder beeper, and the following message will appear on the multi-information display.

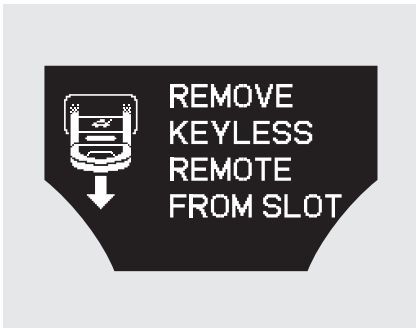


If the vehicle is left in the ACCESSORY mode, the "TO TURN VEHICLE OFF:" message is shown on the multi-information display when you open the driver's door. If the vehicle is left in the VEHICLE OFF (LOCK) mode with the keyless access remote in the slot, the "REMOVE KEYLESS REMOTE FROM SLOT" message is shown on the multi-information display.

The shift lever must be in Park before you can press the engine start/stop button twice to set the vehicle into the VEHICLE OFF (LOCK) mode.

**Built-in Key and Remote**
The built-in key can be used to lock/unlock the doors and the tailgate when the remote battery becomes weak and the power door lock/unlock operation is disabled.

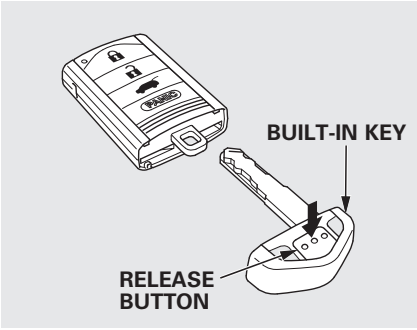


To remove the built-in key, pull it out while pressing the release button. To reinstall the built-in key, push the key into the remote until it clicks.

To avoid damaging the remote and the built-in key, never pull on the built-in key unless you are pressing the release button.

The keyless access system uses an electric field to identify the remote.

If you use medical equipment such as a cardiac pacemaker, ask your doctor if the electric field used by the remote will affect it.

**Valet Function**
The glove box cannot be opened without the built-in key when you lock the glove box with the built-in key. Then, the glove box cannot be opened by using the remote.

Remove the built-in key from the remote by pressing the button, then give that remote to someone else as a valet key.

## Light Control Buttons

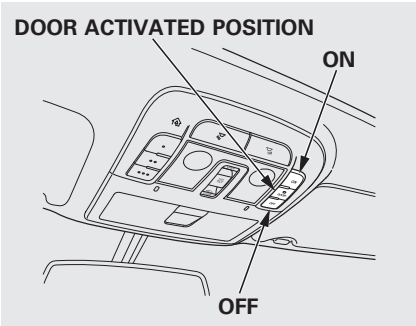


Your vehicle has the light control buttons on the front ceiling. With these buttons, you can select three positions: OFF, DOOR (door activated position), and ON.

To select a position, press the appropriate button.

When you press the DOOR button, the indicator in the button comes on as a reminder.

To turn off the setting, press the OFF button.

*OFF position:*

- The front individual map lights can be turned on and off by pressing each map light button ( ).
- The rear individual map lights cannot be turned on.

*Door (door activated) position:*

- The individual map lights in the front and rear come on when any door or the tailgate is opened, when the remote transmitter/remote (on models with keyless access system) is used to unlock the doors (see page 157). When the doors and the tailgate are closed, each light can be turned on and off by pushing the map light button ( ).

After all doors and the tailgate are closed tightly, the lights dim slightly, then fade out in about 30 seconds.

To change the "INTERIOR LIGHT DIMMING TIME" setting, see page 124.

With any door or the tailgate left open, the lights stay on about 15 minutes, then go out.

*On models without keyless access system*
The lights also come on when the key is removed from the ignition switch.

*On models with keyless access system*
The lights also come on when the power mode is set to VEHICLE OFF (LOCK).

*ON position:*

- All the individual map lights come on and stay on.

## Individual Map Lights

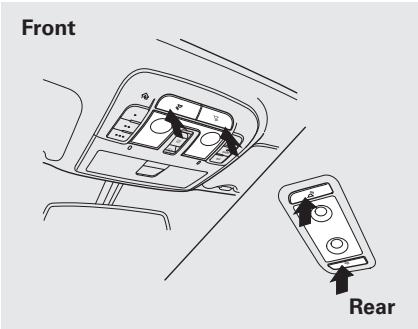


Turn on the front individual map lights by pushing each map light button (). Push the button again to turn it off. When the door activated position is selected with the light control button, the rear map lights can be turned on by pushing each map light button (). Push the button again to turn it off.

If any map light is left on when the ignition switch is turned off (or the vehicle is in VEHICLE OFF mode), and all doors and the tailgate are closed, it will turn off when the vehicle is locked with the remote transmitter/keyless access remote, or after 15 minutes.

## Courtesy Lights

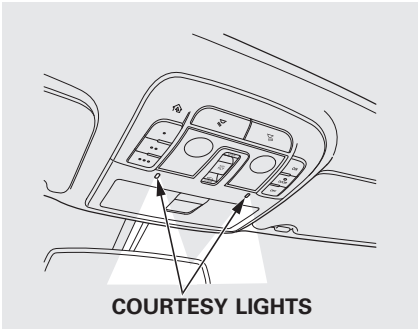


The courtesy lights come on when you turn the parking lights on. To adjust its brightness, press either of the instrument panel brightness control buttons (+ or −) with the ignition switch in the ON (II) position.



*CONTINUED*

Models equipped with the keyless access system have an engine start/stop button instead of an ignition switch. ON mode is the equivalent of ON (II). See page 196 for ignition switch and power mode comparison.

The courtesy light in each door comes on when the door is opened, and goes out when the door is closed.

*On models with adaptive cruise control (ACC)*
The ambient door inner handle lights come on when the parking lights are on.

*On models without keyless access system*
Your vehicle also has a courtesy light in the ignition switch. This light comes on when you open the driver's door. It fades out in about 30 seconds after the door is closed.

In addition to the courtesy lights on the ceiling, the ambient foot lights come on.

## Cargo Area Light

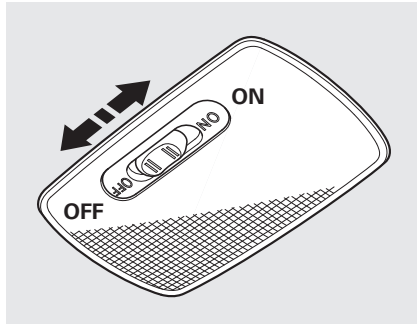


The cargo area light has a three-position switch. In the OFF position, the light does not come on. In the center position, it comes on when you open the tailgate. In the ON position, it stays on continuously.

### Keyless Access Remote Slot Light

*On models with Keyless Access System*

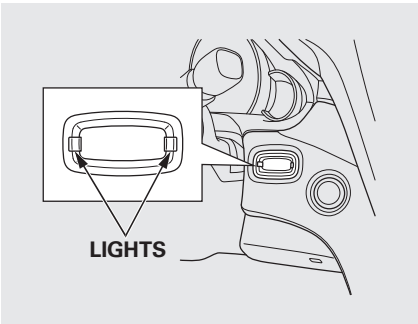


Your vehicle has a keyless access remote slot light. The light comes on when you:

- Open any door.
- Set the vehicle mode to VEHICLE OFF (LOCK).
- Remove the keyless access remote from the keyless access remote slot.

After all doors are closed tightly, the light dims slightly, then fades out in about 30 seconds (depending on the interior light dimming timer setting). The light turns off before 30 seconds have elapsed if you lock the driver's door.

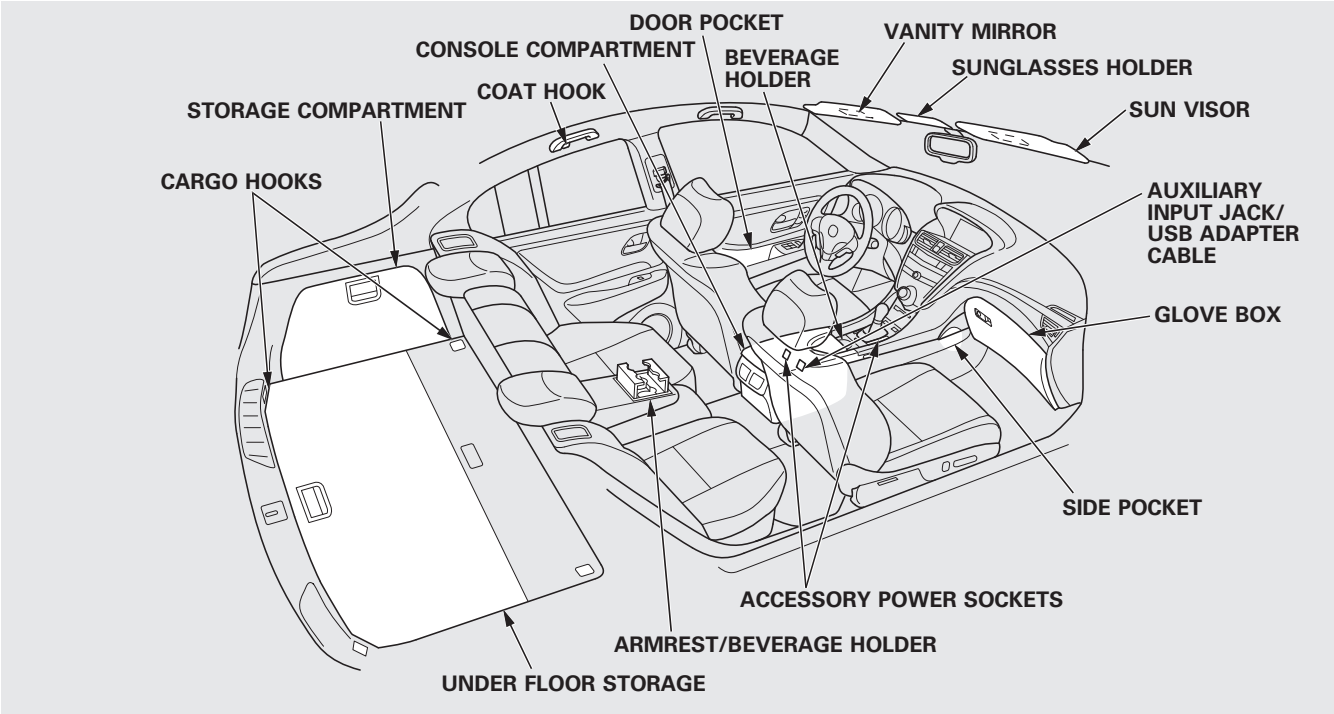
DOOR POCKET
CONSOLE COMPARTMENT
VANITY MIRROR
BEVERAGE HOLDER
SUNGLASSES HOLDER
COAT HOOK
STORAGE COMPARTMENT
SUN VISOR
CARGO HOOKS
AUXILIARY INPUT JACK/ USB ADAPTER CABLE
GLOVE BOX
SIDE POCKET
ACCESSORY POWER SOCKETS
ARMREST/BEVERAGE HOLDER
UNDER FLOOR STORAGE

## Beverage Holders

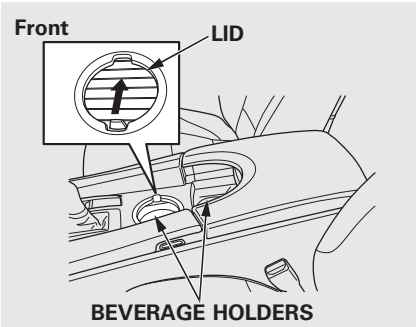


Open the front beverage holders by sliding the lid and the tray.

Be careful when you are using the beverage holders. A spilled liquid that is very hot can scald you or your passengers.

Spilled liquids can damage the upholstery, carpeting, and electrical components in the interior.

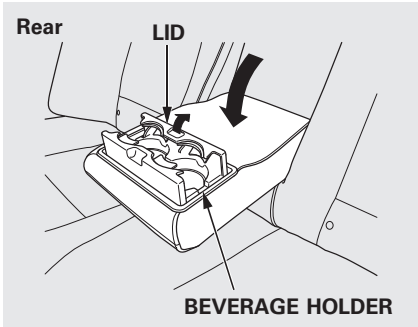


The rear seat also has a beverage holder in the center armrest. To use it, pivot the armrest down.

To open the beverage holder, pull the lid. To close it, push it down until it latches. When you put back the armrest in the center seat-back, make sure the lid is closed properly.

## Console Compartment

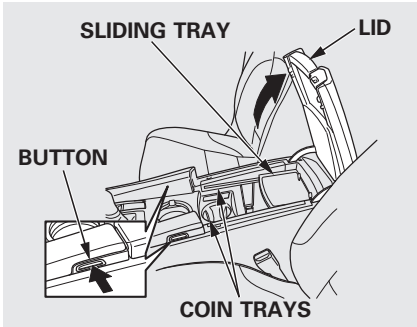


Your vehicle has a multi-function center console. It includes beverage holders, storage compartments, an armrest, storage trays for coins or small items, and a sliding tray.

*CONTINUED*

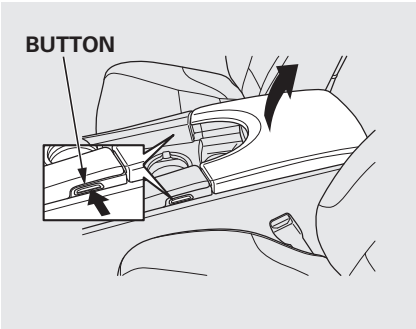


To open the console compartment, push the button on either side of the compartment.

To close, lower the armrest, and push it down until it latches.

The console compartment light comes on when the parking lights are on.

## Under Floor Storage

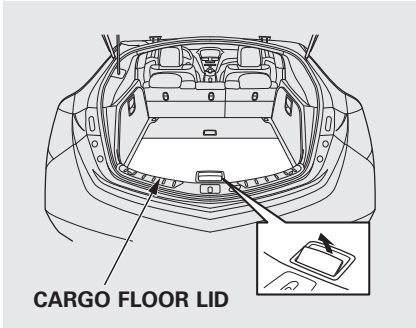


To open the cargo floor lid, pull the handle.

## Storage Compartments

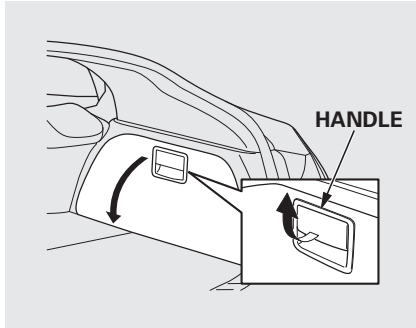


There is a storage compartment with a removable lid on both sides of the cargo area.

To use the storage compartment, pull the handle and open the lid.

To reinstall the lid, set the lid into the floor base and close the lid until it latches.

**NOTE:** The lid must be securely locked in place or put in the under floor storage while driving. A lid that is not locked in place could become a projectile and cause injury in a sudden stop or crash.

## Glove Box

Open the glove box by pulling out the handle. Close it with a firm push. Lock or unlock the glove box with the master key or the built-in key on models with keyless access system.

The glove box light comes on when the parking lights are on.

**⚠ WARNING**

An open glove box can cause serious injury to your passenger in a crash, even if the passenger is wearing the seat belt.

Always keep the glove box closed while driving.

## Sunglasses Holder

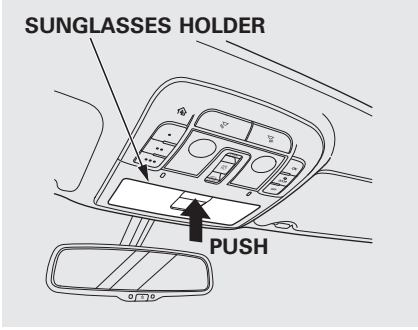


To open the sunglasses holder, push on the lid. It will unlatch and swing down. To close it, push it until it latches. Make sure the holder is closed while you are driving.

*CONTINUED*

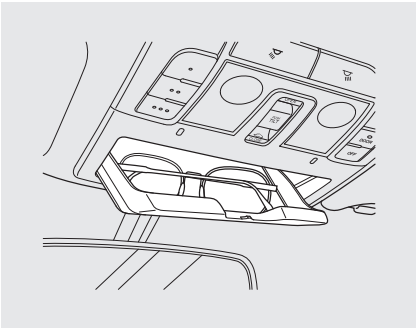

Some larger styles of sunglasses may not fit in the holder.

You may also store small items in this holder. Make sure they are small enough to let the holder close and latch, and that they are not heavy enough to cause the holder to pop open while driving.

## Coat Hook

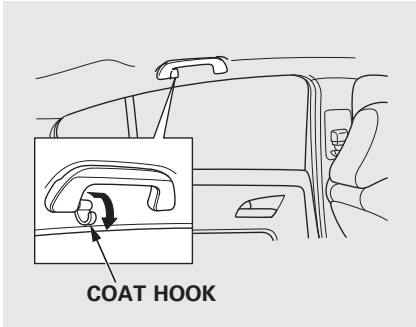


To use a coat hook, slide it out slightly, then pull it down.

Make sure the coat hook is pulled up when you are not using it. This hook is not designed for large or heavy items.

## Sun Visor

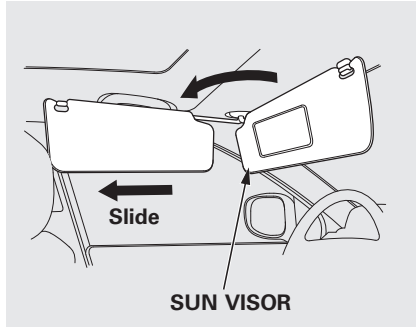


To use the sun visor, pull it down. When using the sun visor for the side window, remove the support rod from the clip, and swing it out.
In this position, the sun visor can be adjusted by moving it on its slider.
Do not use the extended sun visor over the inside mirror.

Make sure you put the sun visor back in place when you are getting into or out of the vehicle.

## Vanity Mirror

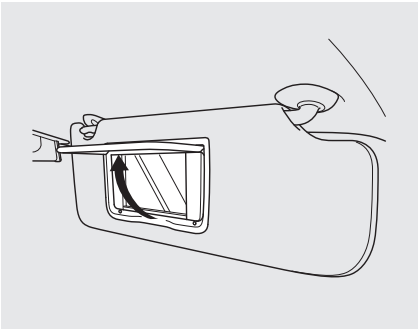

To use the vanity mirror on the back of the sun visor, pull up the cover.

The vanity mirror lights come on when you pull up the cover.

## Accessory Power Sockets

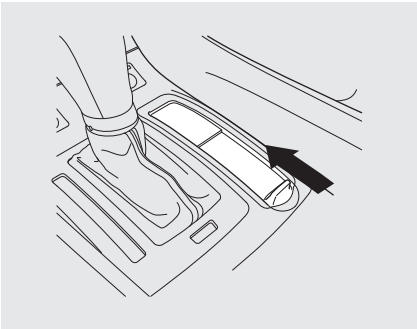

Your vehicle has two accessory power sockets. One is next to the shift lever. The other is in the console compartment.

To access the front accessory power socket, slide the lid forward until it latches. To close it, push forward until it unlatches.

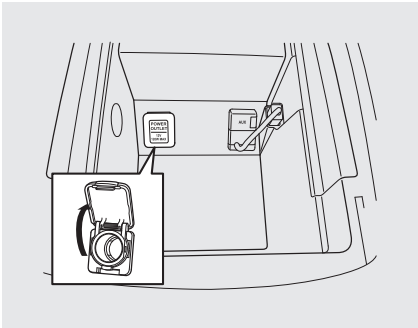


To use an accessory power socket, the ignition switch must be in the ACCESSORY (I) or ON (II) position.

Models equipped with the keyless access system have an engine start/stop button instead of an ignition switch. ACCESSORY mode is the equivalent of ACCESSORY (I), and ON mode is the equivalent of ON (II). See page 196 for ignition switch and power mode comparison.

*CONTINUED*

Each socket is intended to supply power for 12 volt DC accessories that are rated 120 watts or less (10 amps).

None of the sockets will power an automotive type cigarette lighter element.

Make sure to put the socket cover back in place to prevent any small foreign objects from getting into the socket.

The climate control system in your vehicle provides a comfortable driving environment in all weather conditions.

The standard audio system has many features. This section describes those features and how to use them.

Your vehicle has an anti-theft audio system that requires a code number to enable it.


Climate Control System ..... 220
Audio System ..... 228
Audio System (Models without Navigation System) ..... 229
Playing the AM/FM Radio (Models without navigation system) ..... 230
Playing the XM® Radio (Models without navigation system) ..... 238
Playing Discs (Models without navigation system) ..... 244
Disc Changer Error Message (Models without navigation system) ..... 254
Playing an iPod® (Models without navigation system) ..... 255
iPod® Error Messages (Models without navigation system) ..... 263
Playing a USB Flash Memory Device (Models without navigation system) ..... 264
USB Flash Memory Device Error Messages (Models without navigation system) ..... 271
*Bluetooth*® Audio System (Models without navigation system) ..... 272
Audio System (Models with navigation system) ..... 277
Playing the AM/FM Radio (Models with navigation system) ..... 278
Playing the XM® Radio (Models with navigation system) ..... 291
Playing a Disc (Models with navigation system) ..... 300
Disc Player Error Messages (Models with navigation system) ..... 311
Playing Hard Disc Drive (HDD) Audio (Models with navigation system) ..... 312
Playing an iPod® (Models with navigation system) ..... 340
iPod® Error Messages (Models with navigation system) ..... 348
Playing a USB Flash Memory Device (Models with navigation system) ..... 349
USB Flash Memory Device Error Messages (Models with navigation system) ..... 359
*Bluetooth*® Audio System (Models with navigation system) ..... 360
Protecting Your Discs ..... 365
FM/AM Radio Reception ..... 369
Auxiliary Input Jack ..... 371
Remote Audio Controls ..... 371
Radio Theft Protection ..... 374
Setting the Clock ..... 375
Security System ..... 378
Cruise Control ..... 379
Adaptive Cruise Control (ACC) ..... 382
HomeLink® Universal Transceiver ..... 396
*Bluetooth*® HandsFreeLink® (Models without navigation system) ..... 399
*Bluetooth*® HandsFreeLink® (Models with navigation system) ..... 416
AcuraLink® (U.S. models only) ..... 435
Rearview Mirror with Rearview Camera Display ..... 451

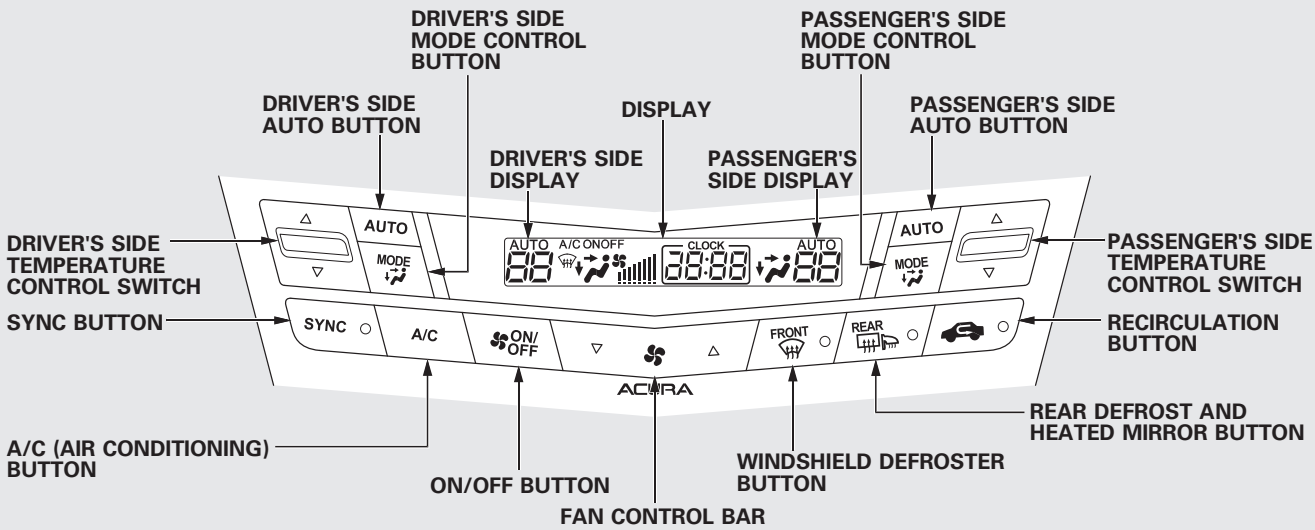


Model with navigation system is shown.

**Personalization Setting**
When you unlock the doors with your remote transmitter (keyless access remote on models with navigation system), the driver's ID (Driver 1 or Driver 2) is detected, and the climate control settings are turned to the respective mode automatically with the ignition switch in the ON (II) position, or the power mode ON.

**Voice Control System**
*On models with navigation system*
The climate control system can also be operated by voice control. See the navigation system manual for complete details.

**Using Automatic Climate Control**
The automatic climate control system in your vehicle maintains the interior temperature you select. The system also adjusts the fan speed and airflow levels.

1. Press the driver's or passenger's AUTO button. You will see AUTO and the selected temperature on the appropriate side of the display.
2. Set the desired temperature with the temperature control switch. You can set the driver's side temperature and the passenger's side temperature separately.

The system automatically selects the proper mix of conditioned and/or heated air that will, as quickly as possible, raise or lower the interior temperature to your preference. The system also dehumidifies the interior.

***Temperature Control***
The driver's side temperature and the passenger's side temperature can be set separately. Push up the switch of the appropriate temperature control to increase the temperature of airflow. Push down the switch to decrease it. Each set temperature is shown in the display.



*CONTINUED*

When you set the temperature to its lower limit (Lo) or its upper limit (Hi), the system runs at full cooling or heating only. It does not regulate the interior temperature.

When you press a fan control bar, the fan is taken out of AUTO mode.

You can also select the appropriate mode on the driver's side and the passenger's side separately. To change a mode, press and release the appropriate side mode control button. This will take the mode control out of AUTO mode.

*On models with navigation system*
In AUTO mode, the vehicle's interior temperature is independently regulated for the driver and front passenger according to each adjusted temperature. The system also regulates each temperature based on the information of the sunlight sensor and the sun's position which is updated automatically by the navigation's global positioning system (GPS). If one side of the vehicle is getting too much sun, the system lowers the temperature only on that side.

***SYNC Button***
When you press this button, the indicator in the button comes on, and the passenger's side temperature and mode control is synchronized to the driver's side set temperature and mode control. Changing the passenger's side temperature or mode control makes the indicator go off and takes the system out of SYNC mode.

***ON/OFF Button***
Each time you press this button, the climate control system switches between on and off. Turning on the system with this button selects your last climate control selection.

**To Turn Everything Off**
To turn the system completely off, press the ON/OFF button.

- Keep the system completely off for short periods only.
- To keep stale air and mustiness from collecting, you should have the fan running at all times.

**Semi-automatic Operation**
You can manually select various functions of the climate control system when it is in fully automatic mode. All other features remain automatically controlled. Making any manual selection causes the word AUTO in the display to go out.

**Fan Control**
Press the ▲ side of the bar to increase the fan speed and airflow. Press the ▼ side of the bar to decrease it.

***Air Conditioning (A/C) Button***
This button turns the air conditioning on and off. You will see A/C ON or A/C OFF in the display.

When you turn the A/C off, the system cannot regulate the inside temperature if you set the temperature control below the outside temperature.



*CONTINUED*

***Recirculation Button***
When the indicator in the button is on, air from the vehicle's interior is sent throughout the system again. When the indicator is off, air is brought in from the outside of the vehicle (fresh air mode).

The outside air intakes for the climate control system are at the base of the windshield. Keep this area clear of leaves and other debris.

The system should be left in fresh air mode under almost all conditions. Keeping the system in recirculation mode, particularly with the A/C off, can cause the windows to fog up.

Switch to recirculation mode when driving through dusty or smoky conditions, then return to fresh air mode.

***Rear Window Defogger Button***
This button turns the rear window defogger off and on (see page 143).

Pushing this button also turns the power mirror heaters on and off.

***Mode Control***
The driver's side mode and the passenger's side mode can be selected separately. Use the appropriate mode control button to select the vents the air flows from. Some air will flow from the dashboard vents in all modes.

Air flows from the center and corner vents in the dashboard.

Airflow is divided between the vents in the dashboard and the floor vents.

Air flows from the floor vents.

Airflow is divided between the floor and corner vents and the defroster vents at the base of the windshield.

This mode can only be selected from the driver's side. When you select this mode, passenger's side mode automatically changes into the same mode. However the passenger's side controls can still change the temperature.

***Windshield Defroster Button***
This button directs the main airflow to the windshield for faster defrosting. It also overrides any mode selection you may have made.

When you select , the system automatically switches to fresh air mode and turns on the A/C. For faster defrosting, the fan speed automatically increases. You can also increase airflow to the windshield by closing the corner vents on the dashboard. To close the vents, rotate the wheel on the side of corner vent.

When you turn off by pressing the button again, the system returns to its former settings.

For your safety, make sure you have a clear view through all the windows before driving.

When the indicator in the button is on, the SYNC indicator also comes on. The front passenger's temperature cannot be set separately from the driver's.



*CONTINUED*

**Dual Temperature and Mode Control**

Your vehicle has two temperature control switches and two mode control buttons, one for the driver, and one for the front passenger.

The driver's side and the passenger's side temperature and mode can be controlled independently.

***Synchronized Control***

The selected temperatures and mode appear in the display. When the indicator in the SYNC button is on, you can adjust both sides to the same temperature and mode by pushing the driver's side temperature control switch up or down.

When you set the temperature to its lower or upper limit, it is displayed as HI or LO.

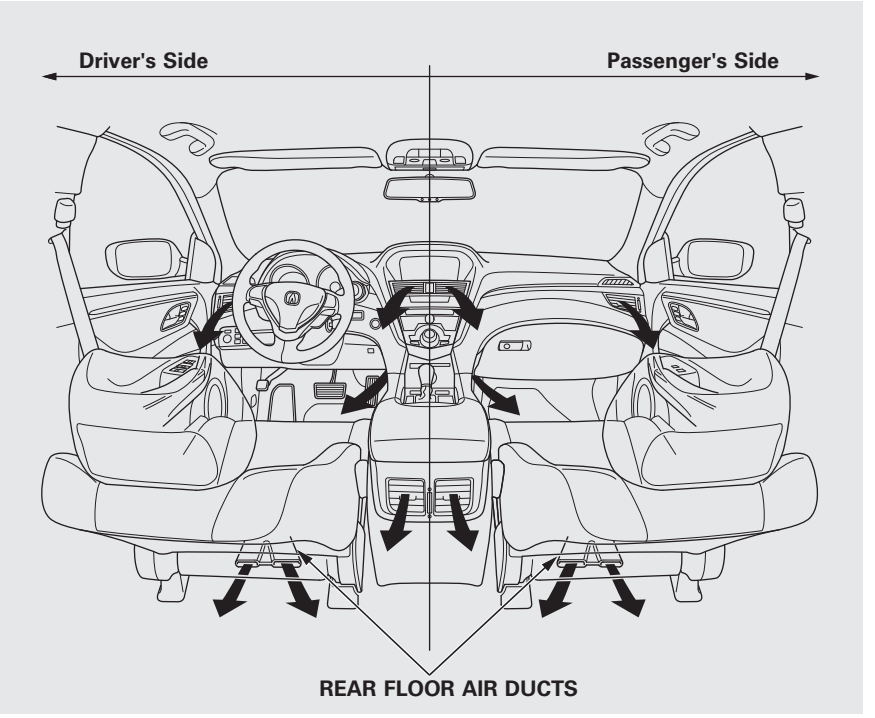

### Rear Ventilation

The airflow from the rear vents can be adjusted when either AUTO mode (driver or passenger) is selected or the fan mode is in the or position.

You can adjust the direction of the airflow by moving the tab on each vent up-and-down and side-to-side. You can also open or close the vents with the dial between them.

### Sunlight and Temperature Sensors

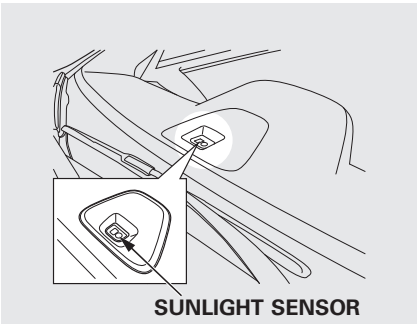


The climate control system has two sensors: a sunlight sensor on top of the dashboard, and a temperature and humidity sensor next to the steering column. Do not cover the sensors or spill any liquid on them.

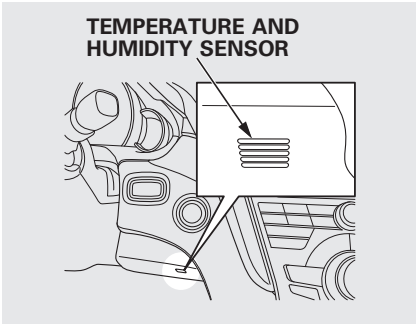


The humidity sensor helps reduce window fogging and also monitors and adjusts cabin humidity by automatically changing the mode to defrost.

# Audio System

An audio system is standard on all models. Read the appropriate pages (as shown below) to use your vehicle's audio system.

For vehicles without navigation system, see pages 229 through 276.

For vehicles with navigation system, see pages 277 through 364.

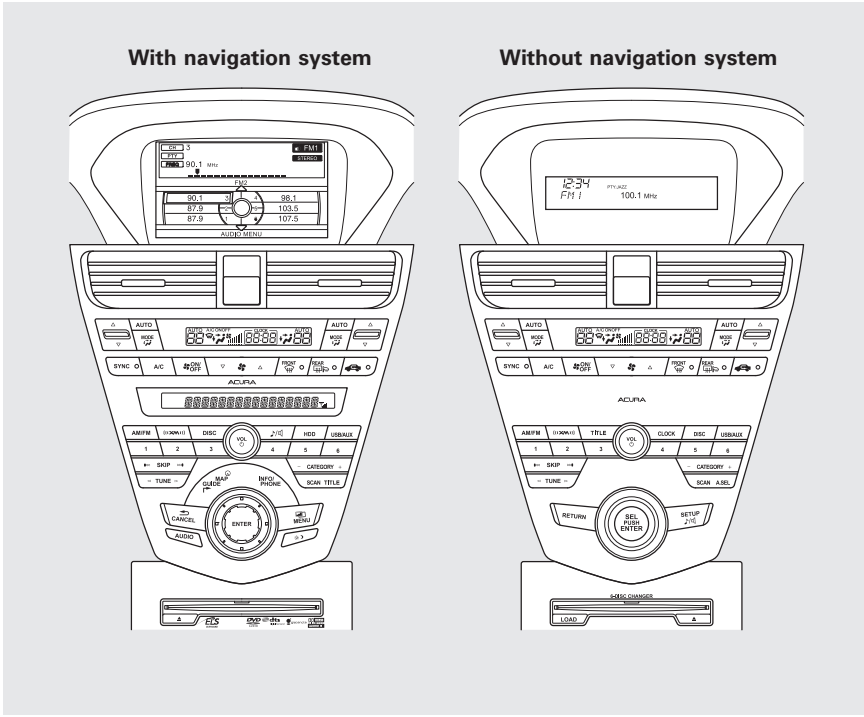

## Selector Knob

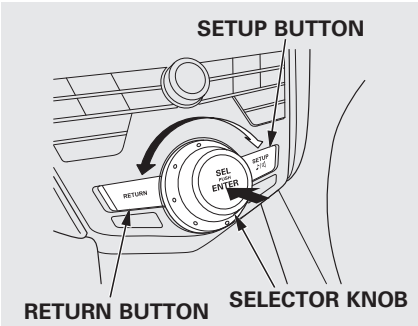


Most audio system functions can be controlled by standard buttons, bars, and knobs. In addition, you can access some functions by using the selector knob on the audio system.

The knob turns left and right. Use it to scroll through lists, or to make selections or adjustments to a list or menu item on the display. When you make a selection, push the center of the selector (ENTER) to go to that selection.

When the audio system is in XM® Radio mode or playing discs, pushing the selector (ENTER) knob switches the display between the normal display and the list display. The list display has three lines to display the detailed information.

## SETUP Display

To use any audio system function, the ignition switch must be in the ACCESSORY (I) or ON (II) position. To select any setting such as the clock or sound adjustment, press the SETUP button. You can select the item by turning the selector knob. To go back to the previous display, press the RETURN button.

Pressing the SETUP button again will also cancel the setup display mode.

## Personalization Setting

When you unlock the doors with your remote transmitter and turn the audio system on with the ignition switch in the ACCESSORY (I) or ON (II) position, the driver's ID (Driver 1 or Driver 2) is detected, and the radio presets and sound level settings (see page 236) are turned to the respective memorized mode automatically.

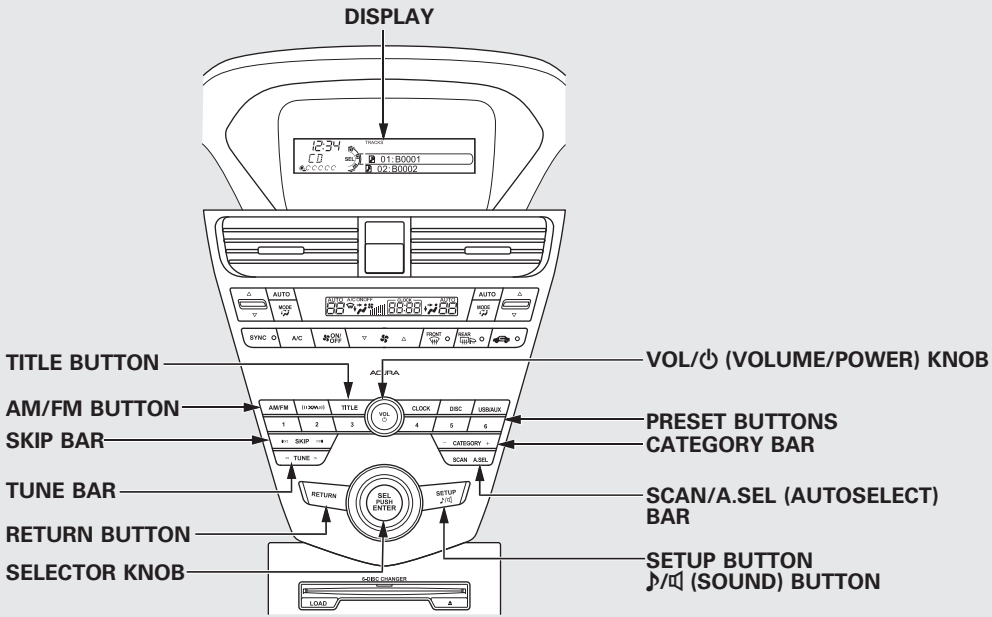
DISPLAY
TITLE BUTTON
AM/FM BUTTON
SKIP BAR
TUNE BAR
RETURN BUTTON
SELECTOR KNOB
VOL/⏻ (VOLUME/POWER) KNOB
PRESET BUTTONS
CATEGORY BAR
SCAN/A.SEL (AUTOSELECT) BAR
SETUP BUTTON
♪/🔊 (SOUND) BUTTON

**To Play the Radio**
The ignition switch must be in the ACCESSORY (I) or ON (II) position. Turn the system on by pushing the VOL/ ⏻ (power/volume) knob or the AM/FM button. Adjust the volume by turning the VOL/ ⏻ knob.

The band and frequency that the radio was last tuned to are displayed. To change bands, press the AM/FM button. On the FM band, ST will be displayed if the station is broadcasting in stereo. Stereo reproduction in AM is not available.

**To Select a Station**
You can use any of five methods to find radio stations on the selected band: tune, skip, scan, the preset buttons, and auto select.

On the FM band, you can also use the features provided by the radio data system (RDS). For more information on the RDS, see page 233.

**TUNE** – Use the TUNE bar to tune the radio to a desired frequency. Press the ▶ side of the bar to tune to a higher frequency, or the ◀ side to tune to a lower frequency. To tune with the selector knob, turn the knob right to tune to a higher frequency, or left to tune to a lower frequency.

**SKIP** – The skip function searches up and down from the current frequency to find a station with a strong signal. To activate it, press the ▶▶| or |◀◀ side of the SKIP bar, then release it.

**SCAN** – The scan function samples all stations with strong signals on the selected band. To activate it, press the SCAN side of the SCAN/A.SEL bar, then release it. You will see SCAN in the display. The system will scan for a station with a strong signal. When it finds one, it will stop and play that station for about 10 seconds.

If you do nothing, the system will scan for the next strong station and play it for 10 seconds. When it plays a station that you want to listen to, press the SCAN side of the SCAN/A. SEL bar again.

*CONTINUED*

**Preset** – Each preset button can store one frequency on AM and two frequencies on FM.

1. Select the desired band, AM or FM. FM1 and FM2 let you store six stations each.
2. Use the tune, skip, scan, or RDS function to tune the radio to a desired station.
3. Pick a preset button, and hold it until you hear a beep.
4. Repeat steps 1 through 3 to store a total of six stations on AM and twelve stations on FM.

**AUTO SELECT** – If you are traveling far from home and can no longer receive your preset stations, you can use the auto select feature to find stations in the local area.

Press the A.SEL side of the SCAN/A.SEL bar. “AUTO SELECT” flashes in the display, and the system goes into scan mode for several seconds. It stores the strongest frequencies of six AM and twelve FM stations in the preset buttons.

You will see a “0” displayed after pressing a preset button if auto select cannot find a strong station for that preset button.

If you do not like the stations auto select has stored, you can store other frequencies on the preset buttons as previously described.

*To turn off auto select,* press the A.SEL side of the bar. This restores the presets you originally set.

For information on AM/FM radio frequencies and reception, see page 369.

**Radio Data System (RDS)**
On the FM band, you can select a favorite station and display the program service name according to the information provided by the radio data system (RDS) if the station has the RDS information available.

***RDS INFO Display***
The RDS information display function shows the name of the RDS station you are listening to. With the audio system on and the FM band selected, you can turn this function on or off.

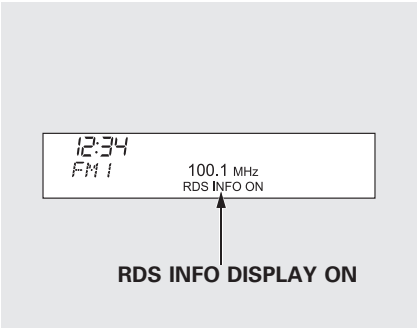


To switch the function between on and off, press and release the TITLE button. With the system on, you will see the “RDS INFO ON” message on the display. If the station you are listening to is an RDS station, the displayed frequency switches to the station name.

If the station you are listening to is not an RDS station, the display continues to show the frequency and briefly shows with the RDS information display.

When you turn off this function by pressing the TITLE button, the display shows “RDS INFO OFF.”



*CONTINUED*

### *Radio Data System (RDS) Category*

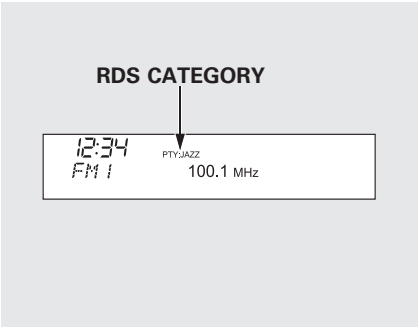


On the FM band selected, you can select the program category provided by the RDS. Press either side (− or +) of the CATEGORY bar to display and select an RDS category. The principal RDS categories are shown as follows:

ALL: All RDS category stations
ROCK: Rock, classic rock and soft rock music
COUNTRY: Country music
SOFT: Adult hits and soft music
TOP 40: Top 40 hits
OLDIES: Nostalgia music and oldies
R & B: Rhythm and blues, and soft rhythm and blues
RELIGION: Religious music and religious talk
CLASSIC: Classical music
JAZZ: Jazz
INFO: News, information, sports, talk, foreign language, personality, public, college, and weather
TRAFFIC: Traffic information

Press either side of the CATEGORY bar to select an RDS category. The display shows the selected RDS category name for about 10 seconds. You can use the search or scan function to find radio stations in the selected RDS category. If you do nothing while the RDS category name is displayed, the selected category is canceled.

***RDS Program Search***

This function searches up and down a frequency for the strongest signal from the frequencies that carry the selected RDS category information. This can help you to find a station in your favorite category. To activate it, press and release either side (⏮ or ⏭) of the SKIP bar. You will see the selected RDS category name blinking while searching it. When the system finds a station, the selected RDS category name will be displayed again for about 5 seconds.

If the system does not find a station, “NOTHING” will be blinking for about 5 seconds, then the system goes back to the last selected station.

***RDS Program SCAN***

The scan function samples all stations with strong signals on the selected RDS category. To activate it, press and release the SCAN side of the SCAN/A.SEL bar. You will see SCAN in the display. The system will scan for a station with a strong signal in the selected RDS category. You will also see the selected RDS category name blinking while searching it. When it finds one, it will stop and play that station for about 10 seconds.

If you do nothing, the system will scan for the next strong station and play it for 10 seconds. When it plays a station that you want to listen to, press the SCAN button again.

If the system does not find a station, “NOTHING” will be blinking for about 5 seconds, then the system goes back to the last selected station.

You can use the RDS program search or scan function even if the RDS information display function is off. In this case, the display shows a frequency in place of a RDS name.



*CONTINUED*

## Adjusting the Sound

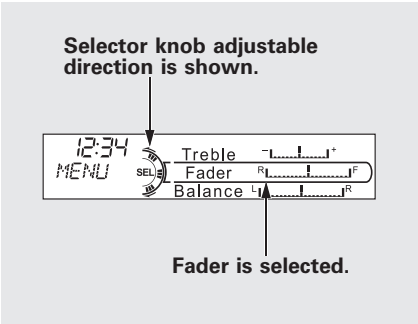


Press the SETUP button to display the sound settings. Turn the selector knob to select an appropriate setting: Bass, Treble, Fader, Balance, Center, Subwoofer, and SVC (speed-sensitive volume compensation). Press the selector (ENTER) knob to enter the setting, then turn the selector knob to adjust the setting.

**Bass** – Adjusts the bass.

**Treble** – Adjusts the treble.

**Fader** – Adjusts the front-to-back strength of the sound.

**Balance** – Adjusts the side-to-side strength of the sound.

**Center** – Adjusts the strength of sound from the center speaker.

**Subwoofer** – Adjusts the strength of sound from the subwoofer speaker.

**SVC** – Adjusts the volume level based on the vehicle speed.

Each mode is shown in the display as it changes. Turn the selector knob to adjust the setting to your liking.

To return to normal play, push the RETURN or SETUP button after you stop adjusting a mode.

***Speed-sensitive Volume Compensation (SVC)***

The SVC mode controls the volume based on vehicle speed. The faster you go, the louder the audio volume becomes. As you slow down, the audio volume decreases.

The SVC has four modes: SVC OFF, SVC LOW, SVC MID, and SVC HIGH. Turn the selector knob to adjust the setting to your liking. If you feel the sound is too loud, choose low. If you feel the sound is too quiet, choose high.

**Audio System Lighting**

You can use the instrument panel brightness control buttons (+ or −) to adjust the illumination of the audio system (see page 144).

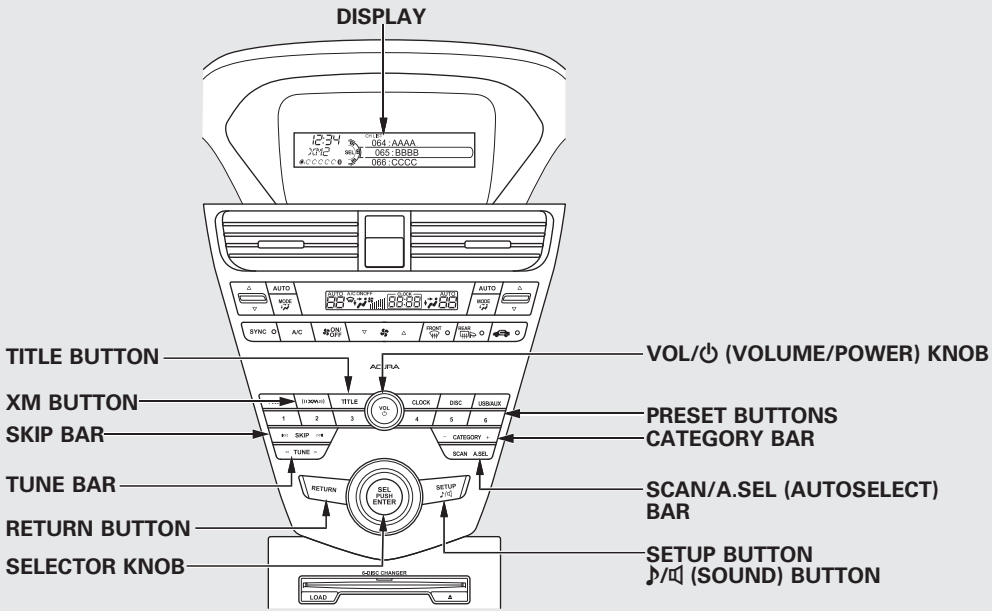
DISPLAY
TITLE BUTTON
XM BUTTON
SKIP BAR
TUNE BAR
RETURN BUTTON
SELECTOR KNOB
VOL/⏻ (VOLUME/POWER) KNOB
PRESET BUTTONS
CATEGORY BAR
SCAN/A.SEL (AUTOSELECT) BAR
SETUP BUTTON
♪/🔊 (SOUND) BUTTON

Your vehicle is capable of receiving XM® Radio anywhere in the United States, and Canada, except Hawaii, Alaska, and Puerto Rico. XM is a registered trademark of Sirius XM Radio®, Inc. and XM CANADA® is a registered business name of Canadian Satellite Radio Inc.

XM Radio receives signals from two satellites to produce clear, high-quality digital reception. It offers many channels in several categories. Along with a large selection of different types of music, XM Radio allows you to view channel and category selections in the display.

**Operating the XM Radio**

To listen to XM Radio, turn the ignition switch to the ACCESSORY (I) or ON (II) position, and press the (( XM )) button. The last channel you listened to will show in the display. Adjust the volume by turning the VOL/ ⏻ knob.

**MODE** – To switch between channel mode and category mode, press and hold the TITLE button until the mode changes.

In the channel mode, you can select all of the available channels. In the category mode, such as Jazz, Rock, Classical, etc., you can select all of the channels within that category.

Each time you press and release the TITLE button, the display changes in the following sequence: name off, category name, name, and title.

You may experience periods when XM Radio does not transmit the artist's name and song title information. If this happens, there is nothing wrong with your system.

**TUNE** – Press either side of the TUNE bar to change channel selections. Press the ▶ side of the bar for higher numbered channels and the ◀ side for lower numbered channels. You can also change channels with the selector knob, turn the knob right for higher numbered channels, or left for lower numbered channels. In the category mode, you can only select channels within that category.



*CONTINUED*

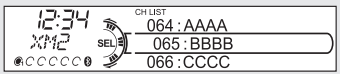


**Channel list is shown.**

You can also select a channel or category from the list by using the selector knob. Push the selector knob (ENTER) to switch the display to the list displayed with three segments, then turn the knob to select a channel or category. Press the selector knob (ENTER) to set your selection or press the RETURN button to keep current selection.

**CATEGORY ( − or + )** − Press either side of the CATEGORY bar to select another category.

**SCAN** − The SCAN function gives you a sampling of all channels while in the channel mode. In the category mode, only the stations within that category are scanned. To activate scan, press the SCAN side of the SCAN/A.SEL bar. The system plays each channel in numerical order for a few seconds, then selects the next channel. When you hear a channel you want to continue listening to, press the SCAN side of the bar again.

**Preset** − You can store up to 12 preset channels using the six preset buttons. Each button stores one channel from the XM1 band and one channel from the XM2 band.

To store a channel:

1. Press the (( XM )) button. Either XM1 or XM2 will show in the display.
2. Use the selector knob, or the CATEGORY bar or SCAN button to tune to a desired channel.

In category mode, only channels within that category can be selected. In channel mode, all channels can be selected.

3. Pick the preset button you want for that channel. Press and hold the button until you hear a beep.
4. Repeat steps 2 and 3 to store the first six channels.

5. Press the «XM» button again. The other XM band will show. Store the next six channels using steps 2 and 3.

Once a channel is stored, simply press and release the proper preset button to tune to it.

**XM Radio Display Messages**

**"LOADING"** – XM is loading the audio or program information.

**"OFF AIR"** – The channel currently selected is no longer broadcasting.

**"UPDATING"** – The encryption code is being updated. Wait until the encryption code is fully updated. Channels 0 and 1 should still work normally.

**"NO SIGNAL"** – The signal is currently too weak. Move the vehicle to an area away from tall buildings, and with an unobstructed view of the southern horizon.

**"- - - -"** – The selected channel number does not exist, is not part of your subscription, or this channel has no artist or title information at this time.

**"NO INFO"** – The selected channel has no artist or title information at this time.

**"ANTENNA"** – There is a problem with the XM antenna. Please consult your dealer.



*CONTINUED*

The XM satellites are in orbit over the equator; therefore, objects south of the vehicle may cause satellite reception interruptions. To help compensate for this, ground-based repeaters are placed in major metropolitan areas.

Satellite signals are more likely to be blocked by tall buildings and mountains the farther north you travel from the equator. Carrying large items on a roof rack can also block the signal.

Depending on where you drive, you may experience reception problems. Interference can be caused by any of these conditions:

- Driving on the north side of an east/west mountain road.
- Driving on the north side of a large commercial truck on an east/west road.
- Driving in tunnels.

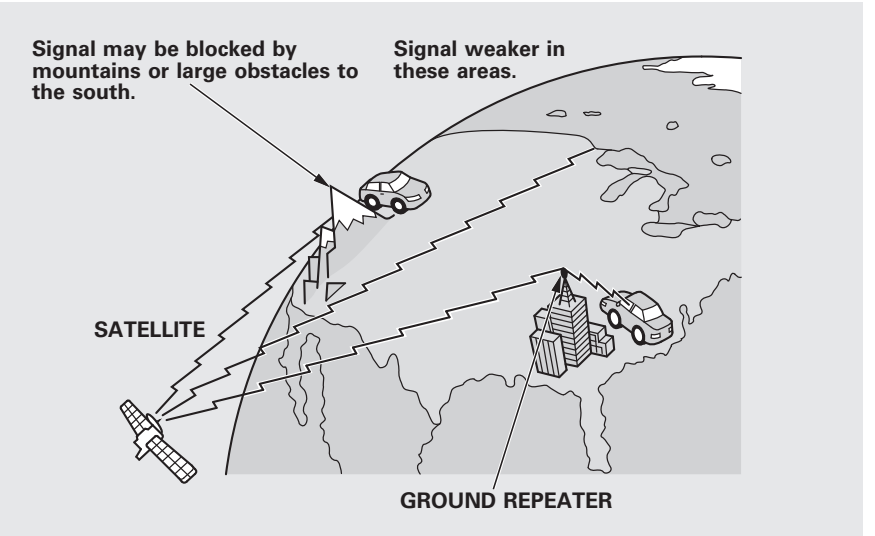


- Driving on a road beside a vertical wall, steep cliff, or hill to the south of you.
- Driving on the lower level of a multi-tiered road.
- Driving on a single lane road alongside dense trees taller than 50 ft. (15 m) to the south of you.

There may be other geographic situations that could affect XM Radio reception.

*As required by the FCC:*
*Changes or modifications not expressly approved by the party responsible for compliance could void the user's authority to operate the equipment.*

**Receiving XM Radio Service**
If your XM Radio service has expired or you purchased your vehicle from a previous owner, you can listen to a sampling of the broadcasts available on XM Radio. With the ignition switch in the ACCESSORY (I) or the ON (II) position, press the (( XM )) button. A variety of music types and styles will play.

If you decide to purchase XM Radio service, contact XM® Radio at *www.xmradio.com,* or at 1-800-852-9696. In Canada, contact XM CANADA® *www.xmradio.ca,* or call 1-877-209-0079. You will need to give them your radio I.D. number and your credit card number. To get your radio I.D. number, press the (( XM )) button, then turn the selector knob until “CH 000” appears in the display. Your I.D. will appear in the display.

After you’ve registered with XM Radio, keep your audio system in the XM Radio mode while you wait for activation. This should take about 30 minutes.

While waiting for activation, make sure your vehicle remains in an open area with good reception. Once your audio system is activated, “CATEGORY” or “CHANNEL” will appear in the display, and you’ll be able to listen to XM radio broadcasts. XM Radio will continue to send an activation signal to your vehicle for at least 12 hours from the activation request. If the service has not been activated after 36 hours, contact XM Radio. In Canada, contact XM CANADA®.

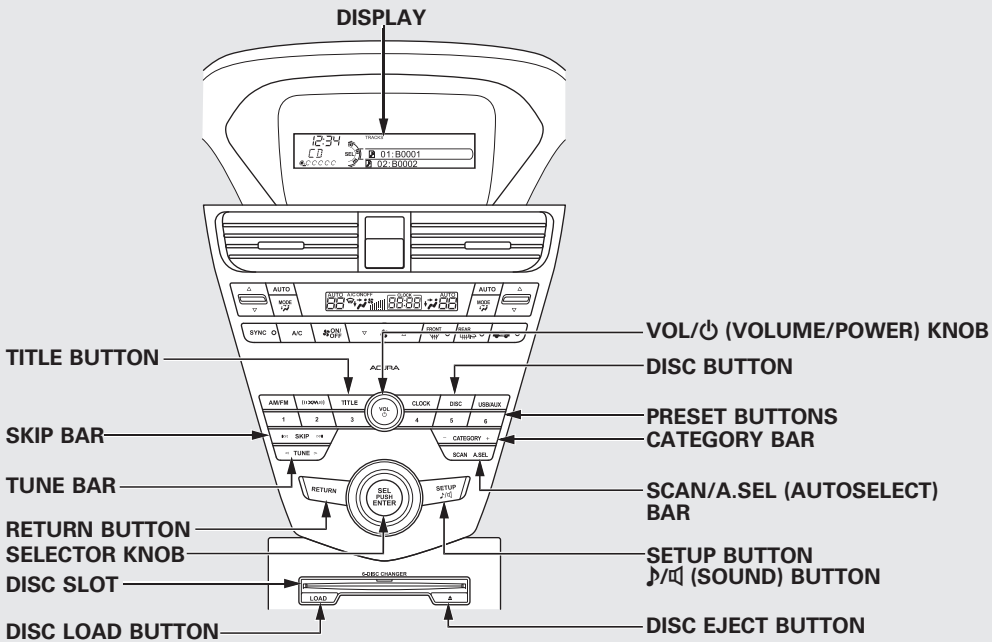
DISPLAY
TITLE BUTTON
SKIP BAR
TUNE BAR
RETURN BUTTON
SELECTOR KNOB
DISC SLOT
DISC LOAD BUTTON
VOL/⏻ (VOLUME/POWER) KNOB
DISC BUTTON
PRESET BUTTONS
CATEGORY BAR
SCAN/A.SEL (AUTOSELECT) BAR
SETUP BUTTON
♪/🔊 (SOUND) BUTTON
DISC EJECT BUTTON

**To Play a Disc**
To load or play discs, the ignition switch must be in the ACCESSORY (I) or ON (II) position.

You operate the disc changer with the same controls used for the radio. To select the disc changer, press the DISC button. You will see "CD" in the display. The disc and track numbers, and the elapsed time are shown in the display. You can also select the displayed information with the TITLE button (see page 246). The system will continuously play a disc until you change modes.

**NOTICE**

*Do not use discs with adhesive labels. The label can curl up and cause the disc to jam in the unit.*

This audio system can also play CD-Rs and CD-RWs (uncompressed or MP3/WMA formats). When playing a disc in MP3, you will see "MP3" in the display. In WMA format, "WMA" will appear in the display. The disc, folder and track numbers are displayed. A disc can support up to 255 folders, and each folder can hold more than 255 playable files. A disc can hold up to 999 files in total.

If you have a disc that is a combination of CD-DA tracks and MP3/WMA files, you can choose the format to listen to by pressing and holding the DISC button until you hear a beep.

A disc compressed in AAC format cannot be played in this audio system.

Video CDs and DVDs do not work in this unit.

**NOTE:**
If a file on an MP3 or WMA disc is protected by digital rights management (DRM), the audio unit displays UNSUPPORTED, and then skips to the next file.

Depending on the software the files were made with, it may not be possible to play some files, or display some text data.



*CONTINUED*

***Loading Discs***

Your vehicle's in-dash disc changer holds up to six discs.

1. To load all disc, press the LOAD button until you hear a beep and see "LOAD" in the display. To load only one disc, press and release the LOAD button.
2. The disc number for an empty position begins blinking.
3. Insert the disc into the disc slot when the green disc load indicator comes on. Insert it only about halfway; the drive will pull it in the rest of the way. You will see "BUSY" in the display while the disc load indicator turns red and blinks as the disc is loaded.

   You cannot load and play 3-inch (8-cm) discs in this unit.
4. When the disc load indicator turns green and "LOAD" appears in the display again, insert the next disc in the slot. Do not try to insert a disc until "LOAD" appears. You could damage the audio unit.
5. Repeat this until all six positions are loaded. If you are not loading all six positions, the system begins playing the last disc loaded.

You can also load a disc into an empty position while a disc is playing by pressing the appropriate preset button. The system stops playing the current disc and starts the loading sequence. It then plays the disc just loaded.

***Text Data Display Function***

Each time you press the TITLE button, the display shows you the text data on a disc, if the disc was recorded with text data.

If you select NAME OFF, the text display is turned off.

You can see the album, artist, and track name in the display. If a disc is recorded in MP3 or WMA, you can see the folder and file name, and the artist, album, and track tag.

When you press and release the TITLE button while a disc without text data is playing, you will see "NO INFO" on the display.

The display shows up to 17 characters of selected text data (the folder name, file name, etc.).

If any letter is not available, it is replaced with " . " (dot) in the display.
When the disc has no text data, you will see "NO INFO" on the display.

You will also see some text data under these conditions:

- When a new folder, file, or track is selected.
- When you change the audio mode to play a disc with text data or in MP3 or WMA.
- When you insert a disc, and the system begins to play.

When playing a CD-DA with text data, the album and track name are shown in the display. With a disc in MP3 or WMA, the display shows the folder and file name.

***To Change or Select Tracks/Files***
Use the SKIP bar while a disc is playing to select passages and change tracks (files in MP3 or WMA mode).

In MP3 or WMA mode, use the CATEGORY bar to select folders on the disc and use either side of the SKIP bar to change files.

To select a different disc, use the appropriate preset buttons (1 through 6). If you select an empty position, the system will go into the loading sequence (see page 246).



*CONTINUED*

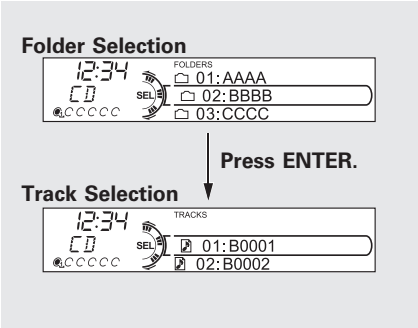


In MP3 or WMA mode, you can also select a folder or track/file from the list by using the selector knob. Push the selector knob (ENTER) to switch the display to the list displayed with three segments, then turn the knob to select a folder. Press the selector knob (ENTER) to change the display to the track/file list, then turn the same knob to select a track/file. Press the selector knob (ENTER) to set your selection.

**SKIP** – Each time you press and release the ▶▶I side of the SKIP bar, the player skips forward to the beginning of the next track (file in MP3 or WMA mode). Press and release the I◀◀ side of the bar to skip backward to the beginning of the current track. Press it again to skip to the beginning of the previous track.

To move rapidly within a track or file, press and hold either side (I◀◀ or ▶▶I/◀ or ▶) of the SKIP bar or the TUNE bar.

*In MP3 or WMA mode*

**FOLDER SELECTION** – To select a different folder, press either side (+ or –) of the CATEGORY bar to move to the beginning of the next folder. Press the + side to skip to the next folder, and press the – side to skip to the beginning of the previous folder.

***To Select Repeat, Random or Scan Mode:***

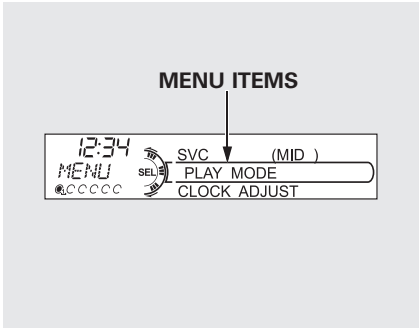


You can select any type of repeat, random and scan modes by using the SETUP button and the selector knob. Push the SETUP button to display the menu items, then turn the selector knob to select “PLAY MODE.” Press the selector knob (ENTER) to set the selection.

Turn the selector knob to select an appropriate repeat, random or scan mode, then press the selector knob (ENTER) to set your selection.

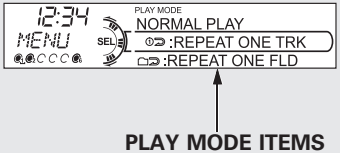


To cancel the selected repeat, random, or scan mode, press the SETUP button to show “PLAY MODE,” then press the selector knob (ENTER). When you see “NORMAL PLAY,” press ENTER again.

**REPEAT ONE TRK** – To continuously replay a track (file in MP3 or WMA mode), select REPEAT ONE TRK from the menu items. You will see REPEAT ONE TRK icon in the display. Select NORMAL PLAY to turn it off.

Pressing either side of the SKIP bar also turns off the repeat feature.

*In MP3 or WMA mode*

**REPEAT ONE FLD** – This feature, when activated, replays all the files in the selected folder in the order they are compressed in MP3 or WMA. To activate folder repeat mode, select REPEAT ONE FLD from the menu items. You will see REPEAT ONE FLD icon in the display. The system continuously replays the current folder. Select NORMAL PLAY to turn it off. Selecting a different folder with the CATEGORY bar also turns off the repeat feature.

*CONTINUED*

**REPEAT DISC** – This feature continuously replays the current disc. To activate disc repeat, select REPEAT DISC from the menu items. You will see REPEAT DISC icon in the display. Select NORMAL PLAY to turn it off.

*In MP3 or WMA mode*
**RANDOM IN FLD** – This feature, when activated, plays the files within the current folder in random order, rather than in the order they are compressed in MP3 or WMA. To activate folder random play, select RANDOM IN FLD from the menu items. You will see RANDOM IN FLD icon in the display. The system will then select and play files randomly. This continues until you deactivate folder random play by selecting NORMAL PLAY, or you select a different folder with the CATEGORY bar.

**RANDOM IN DISC** – This feature plays the tracks within a disc (the files in MP3 or WMA mode) in random order. To activate random play, select RANDOM IN DISC from the menu items. You will see RANDOM IN DISC icon in the display. Select NORMAL PLAY to return to normal play.

**SCAN TRK** – The SCAN function samples all the tracks on the disc in the order they are recorded on the disc (all files in the selected folder in MP3 or WMA mode). To activate the scan feature, press and release the SCAN side of the SCAN/A.SEL bar. You will see SCAN in the display. You will get a 10 second sampling of each track/file on the disc/folder. Press and hold the SCAN side of the bar to get out of scan mode and play the last track sampled.

You can also select the scan feature from the menu items with the selector knob (see page 248).

*In MP3 or WMA mode*

**SCAN FLD** – This feature, when activated, samples the first file in each folder on the disc in the order they are recorded. To activate the folder scan feature, press and release the SCAN side of the SCAN/A.SEL bar repeatedly. You will see SCAN FLD icon in the display. The system will then play the first file in the main folders for about 10 seconds. If you do nothing, the system will then play the following first files for 10 seconds each. When it plays a file that you want to continue listening to, press and hold the SCAN side of the bar.

You can also select the folder scan feature from the menu items with the selector knob (see page 248).

Pressing either side of the SKIP bar, or selecting a different disc (using the preset buttons) or folder (using the CATEGORY bar) turns off the SCAN or SCAN FLD feature.

**SCAN DISC** – This feature, when activated, samples the first track on each disc in order (the first file in the main folder on each disc in MP3 or WMA mode). To activate the disc scan feature, press and release the SCAN side of the SCAN/A.SEL bar repeatedly until SCAN DISC icon shows in the display. The system will then play the first track/file in the first main folder on the first disc for about 10 seconds. If you do nothing, the system will then play the following first track/file for 10 seconds each. When it plays a track/file that you want to continue listening to, press and hold the SCAN side of the bar again.



*CONTINUED*

When the first track on the last disc, or the first file in the last main folder on the last disc begins to play, the disc scan mode will be canceled. Pressing either side of the SKIP bar or selecting a different folder with the CATEGORY bar also turns off the scan feature.

Each time you press and release the SCAN side of the SCAN/A.SEL bar, the mode changes from scan, disc scan, then to normal play.

*In MP3 or WMA mode*
Each time you press and release the SCAN side of the SCAN/A.SEL bar, the mode changes from file scan, folder scan, disc scan, then to normal play.

You can also select the disc scan feature from the menu items with the selector knob (see page 248).

**To Stop Playing a Disc**
Press the eject button (⏏) to remove the disc. If you eject the disc, but do not remove it from the slot, the system will automatically reload the disc after 10 seconds and begin playing.

To eject all discs, press and hold the eject button until the first disc begins to eject.

To play the radio when a disc is playing, press the AM/FM or «XM» button. Press the USB/AUX button to switch to an appropriate audio unit (if it is connected to the auxiliary input jack or the USB adapter cable). Press the DISC button again to switch back to the disc changer.

If you turn the system off while a disc is playing, either with the VOL/⏻ knob or by turning off the ignition switch, the disc will stay in the drive. When you turn the system back on, the disc will begin playing where it left off.

***Removing Discs from the In-dash Disc Changer***

To remove the disc currently in play, press the eject button. When a disc is removed from a slot, the system automatically begins the load sequence so you can load another disc in that position. If you do not remove the disc from the changer within 10 seconds, the disc will reload into the slot. Then the system returns to the previous mode (AM, FM, or XM Radio).

To remove a different disc from the changer, first select it with the appropriate preset button. When that disc begins playing, press the eject button. Continue pressing the eject button to remove all the discs from the changer.

You can also eject discs when the ignition switch is off. The disc that was last selected is ejected first.

**Protecting Discs**

For information on how to handle and protect compact discs, see page 365.

# Disc Changer Error Message (Models without navigation system)

The chart on the right explains the error messages you may see in the display while playing a disc.

If you see an error message in the display while playing a disc, press the eject button. After ejecting the disc, check it for damage or deformation. If there is no damage, insert the disc again.

For the additional information on damaged discs, see page 366.

The audio system will try to play the disc. If there is still a problem, the error message will reappear. Press the eject button, and pull out the disc. Insert a different disc. If the new disc plays, there is a problem with the first disc. If the error message cycle repeats and you cannot clear it, take your vehicle to a dealer.

| Error Message | Cause | Solution |
|---|---|---|
| HEAT ERROR | High Temperature | Will disappear when the temperature returns to normal. |
| UNSUPPORTED | Track/File format not supported | Current track will be skipped. The next supported track or file plays automatically. |
| BAD DISC<br>PLEASE CHECK<br>OWNER'S MANUAL PUSH<br>EJECT | Mechanical Error | Press the EJECT button and pull out the disc(s). Check the disc for serious damage, signs of deformation, excessive scratches, and/or dirt (see page 366). Insert the disc again. If the code does not disappear, or the disc(s) cannot be removed, consult your dealer. Do not try to force the disc out of the player. |
| MECHA ERROR | | |
| CHECK DISC | | |
| BAD DISC<br>PLEASE CHECK<br>OWNER'S MANUAL | Servo Error | |

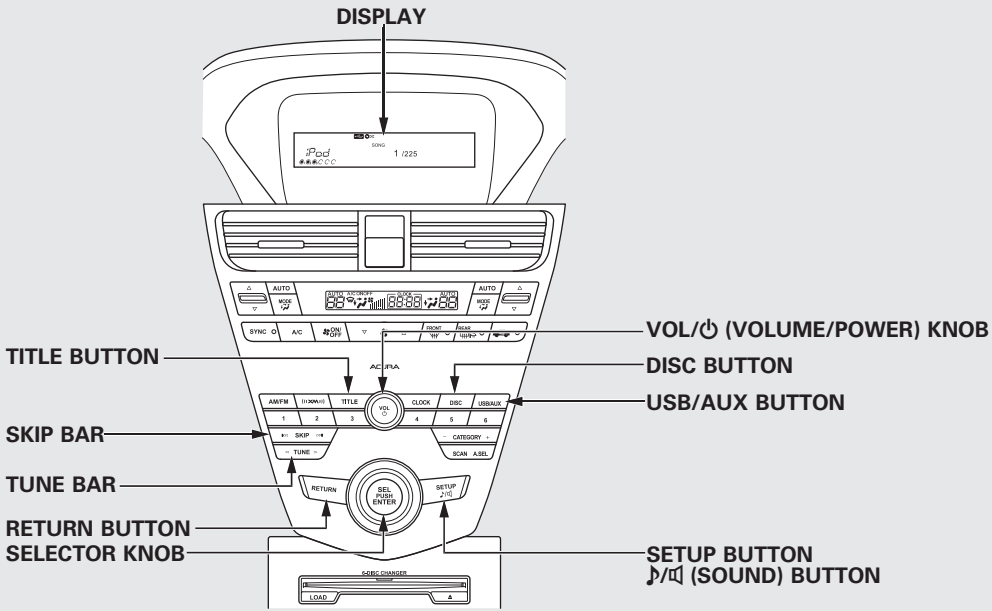
DISPLAY
TITLE BUTTON
SKIP BAR
TUNE BAR
RETURN BUTTON
SELECTOR KNOB
VOL/⏻ (VOLUME/POWER) KNOB
DISC BUTTON
USB/AUX BUTTON
SETUP BUTTON
♪/🔊 (SOUND) BUTTON

*CONTINUED*

**To Play an iPod®**
This audio system can select and play the audio files on the iPod® with the same controls used for the disc player. To play an iPod, connect it to the USB adapter cable in the console compartment by using your dock connector, then press the USB/AUX button. The ignition switch must be in the ACCESSORY (I) or ON (II) position. The iPod will also be charged with the ignition switch in these positions.

The system will only play songs stored on the iPod with iTunes.

iPod and iTunes are registered trademarks owned by Apple Inc.

iPods compatible with your audio system using the USB adapter cable are:

| Model | Software |
|---|---|
| iPod 5th and 6th generations | Ver. 1.2 or more |
| iPod classic | Ver. 1.0 or more |
| iPod nano 1st generation | Ver. 1.2 or more |
| iPod nano 2nd generation | Ver. 1.1.2 or more |
| iPod nano 3rd generation | Ver. 1.0 or more |
| iPod nano 4th generation | Ver. 1.0.2 or more |
| iPod touch 1st generation | Ver. 1.1.1 or more |
| iPod touch 2nd generation | Ver. 2.1.1 or more |
| iPhone | Ver. 2.1.0 or more |
| iPhone 3G | Ver. 2.1.0 or more |

Use only compatible iPods with the latest software. iPods that are not compatible will not work in this audio unit.

**NOTE:**

- Do not connect your iPod using a hub.
- Do not keep the iPod in the vehicle. Direct sunlight and high heat will damage it.
- Do not use an extension cable between the USB adapter cable equipped with your vehicle and your dock connector.
- We recommend backing up your data before playing it.
- Some devices cannot be powered or charged via the USB adapter. If this is the case, use the accessory adapter to supply power to your device.

*Connecting an iPod*

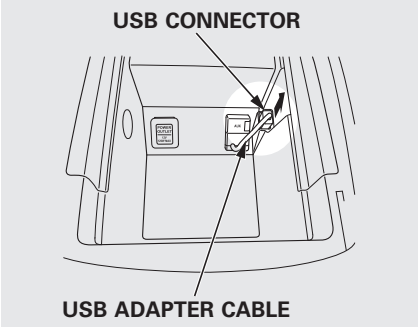


1. Pull out the USB connector from the holder.

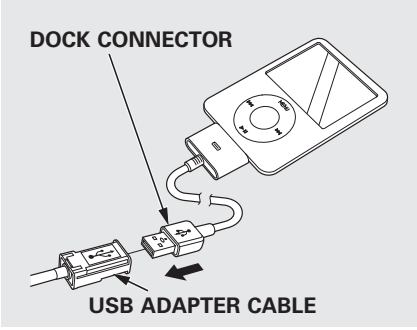


2. Connect your dock connector to the iPod correctly and securely.
3. Install the dock connector to the USB adapter cable securely.

If the iPod indicator does not appear in the audio display, check the connections, and try to reconnect the iPod a few times.

If the audio system still does not recognize the iPod, the iPod may need to be reset. Follow the instructions that came with your iPod, or you can find reset instructions online at *www.apple.com/ipod.*



*CONTINUED*

***Text Data Display Function***

Each time you press the TITLE button the display mode switches between the album name, the song name, the artist name, all of them, or name off (which turns off the text display).

The display shows up to about 14 characters (including spaces) of the selected data.

***To Change or Select Files***

Use the SKIP bar while an iPod is playing to select passages and change files.

**SKIP** – Each time you press and release the ▶▶| side of the SKIP bar, the system skips forward to the beginning of the next file. Press and release the |◀◀ side of the bar, to skip backward to the beginning of the current file. Press it again to skip to the beginning of the previous file.

To move rapidly within a file, press and hold either side (▶▶| or |◀◀/▶ or ◀) of the SKIP bar or the TUNE bar.

Turning the selector knob to the right or the left also changes the file.

***To Select a File from iPod Menu***

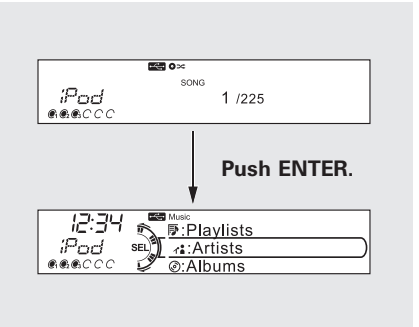


You can also select a file from any list on the iPod menu: playlists, artists, albums and songs, by using the selector knob. Push the selector knob (ENTER) to switch the display to an iPod menu, then turn the selector knob to select a desired list. Press ENTER to set your selection.

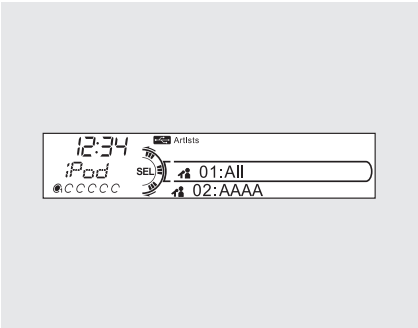


The display shows items on the selected list. Turn the selector knob to select an item, then press ENTER to set your selection.

If you select “ALL,” all available files on the selected list are played.

Pressing the RETURN button goes back to the previous display and pressing the SETUP button cancels this setting mode.

***To Select Repeat or Shuffle Mode:***

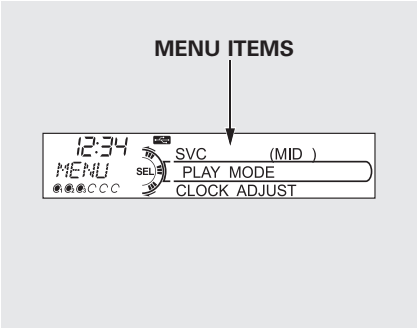


You can select any type of repeat and shuffle mode by using the SETUP button and the selector knob. Press the SETUP button to display the menu items, then turn the selector knob to select “PLAY MODE.” Press ENTER to set the selection.

Turn the selector knob to select PLAY MODE: NORMAL PLAY, SHUFFLE OFF, SHUFFLE ALL, SHUFFLE ALBUM, REPEAT OFF, or REPEAT ONE TRK, then press ENTER to set your selection.



*CONTINUED*

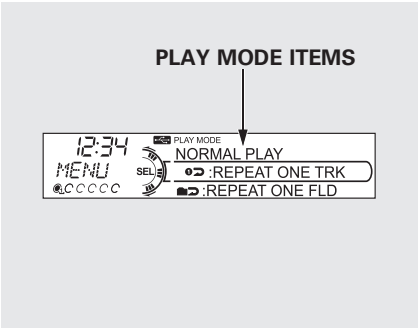


To cancel the selected mode, press the SETUP button and turn the selector knob to show “PLAY MODE,” then press ENTER. When you see “NORMAL PLAY,” press ENTER again.

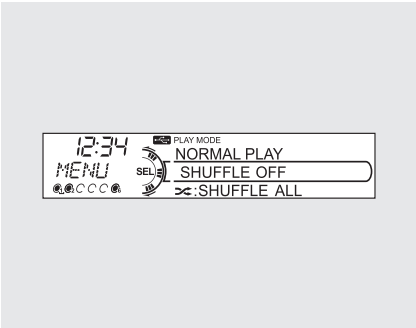


**SHUFFLE OFF** – This feature turns off either of the shuffle modes (SHUFFLE ALL and SHUFFLE ALBUM).

**SHUFFLE ALL** – This feature plays all available files in a selected list (playlists, artists, albums or songs) in random order.
You will see SHUFFLE ALL icon in the display.
Select NORMAL PLAY or SHUFFLE OFF to turn off this feature.

**SHUFFLE ALBUM** – This feature plays all available albums in a selected list (playlists, artists, albums or songs) in random order. The files in each album are played in the recorded order. You will see SHUFFLE ALBUM icon in the display.
Select NORMAL PLAY or SHUFFLE OFF to turn off this feature.

**REPEAT OFF** – This feature turns off the repeat mode.

**REPEAT ONE TRK** – This feature continuously plays a file. You will see REPEAT ONE TRK icon in the display. Select NORMAL PLAY or REPEAT OFF to turn it off.

Pressing either side of the SKIP bar or turning the selector knob changes the file while keeping the repeat feature.

Pressing either side of the SKIP bar or turning the selector knob changes a file while keeping the shuffle function.

**NOTE:**
Available operating functions vary on models or versions. Some functions may not be available on the vehicle's audio system.

**To Stop Playing Your iPod**
To play the radio, press the AM/FM, or (( XM )) button. Press the DISC button to switch to the disc mode. Press the USB/AUX button to switch the audio mode between the *Bluetooth*® audio and iPod.

You can also press the MODE button on the steering wheel to change modes.

***Disconnecting an iPod***
You can disconnect the iPod at any time when you see the "OK to disconnect" message* in the iPod display. Always make sure you see the "OK to disconnect" message in the iPod display before you disconnect it. Make sure to follow the iPod's instructions on how to disconnect the dock connector from the USB adapter cable.

*: The displayed message may vary on models or versions. On some models, there is no message to disconnect.

If you reconnect the same iPod, the system may begin playing where it left off, depending on what mode the iPod is in when it is reconnected.



*CONTINUED*

**iPod Error Messages**
If you see an error message in the display, see page 263.

If you see an error message on the audio display while playing an iPod, find the solution in the chart to the right. If you cannot clear the error message, take your vehicle to your dealer.

| Error Message | Solution |
|---|---|
| UNPLAYABLE FILE | The system cannot read the file(s). Check the files in the iPod. There is a possibility that the files have been damaged. |
| UNSUPPORTED VER | Appears when an unsupported iPod is inserted. |

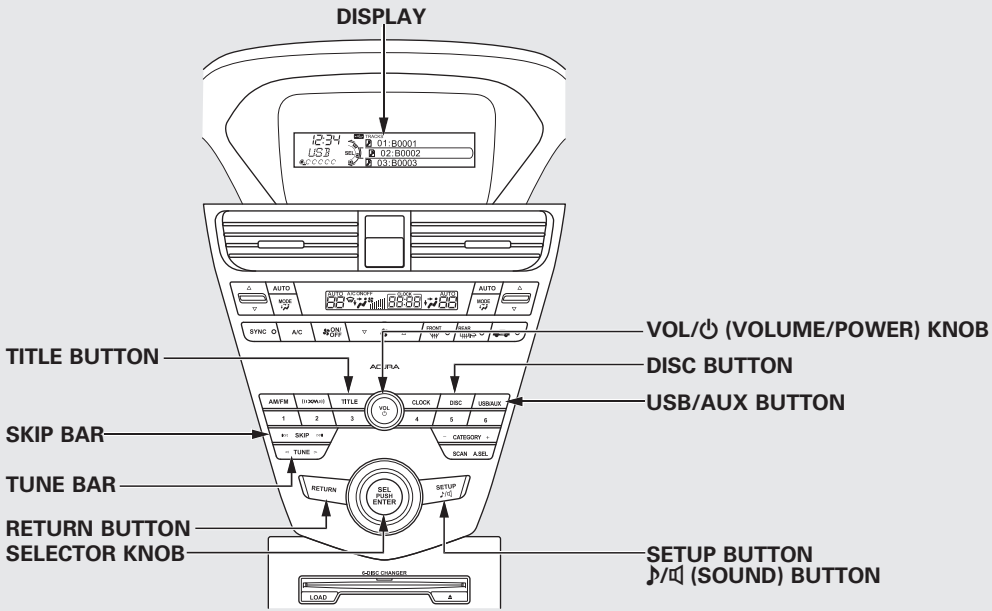
DISPLAY
TITLE BUTTON
SKIP BAR
TUNE BAR
RETURN BUTTON
SELECTOR KNOB
VOL/⏻ (VOLUME/POWER) KNOB
DISC BUTTON
USB/AUX BUTTON
SETUP BUTTON
♪/🔊 (SOUND) BUTTON

**To Play a USB Flash Memory Device**

The ignition switch must be in the ACCESSORY (I) or ON (II) position. This audio system can select and play the audio files on a USB flash memory device with the same controls used for the disc player. To play a USB flash memory device, connect it to the USB adapter cable in the console compartment, then press the USB/AUX button.

The audio system reads and plays the audio files on the USB flash memory device in MP3, WMA or AAC* formats. Depending on the format, the display shows MP3, WMA or AAC when a USB flash memory device is playing. The USB flash memory device limit is up to 700 folders or up to 65535 files.

*: Only AAC format files recorded with iTunes are playable on this audio unit.

The recommended USB flash memory devices are 256 MB or higher, and formatted with the FAT file system. Some digital audio players may be compatible as well.

Some USB flash memory devices (such as devices with security lock-out features, etc.) will not work in this audio unit.

**NOTE:**

- Do not use a device such as a card reader or hard drive as the device or your files may be damaged.
- Do not connect your USB flash memory device using a HUB.
- Do not use an extension cable to the USB adapter cable equipped with your vehicle.
- Do not keep a USB flash memory device in the vehicle. Direct sunlight and high heat will damage it.
- We recommend backing up your data before playing a USB flash memory device.
- Some devices cannot be powered or charged via the USB adapter, if this is the case use the accessory adapter to supply power to your device.

*CONTINUED*

- Depending on the type and number of files, it may take some time before they begin to play.
- Depending on the software the files were made with, it may not be possible to play some files, or display some text data.
- Depending on the type of encoding and writing software used, there may be cases where character information does not display properly.

Even if recorded in MP3, WMA or AAC format, a file with unsupported version cannot be played. If the system finds it, the audio unit displays UNSUPPORTED, and then skips to the next file.

In WMA or AAC format, DRM (digital rights management) files cannot be played. If the system finds a DRM file, the audio unit displays UNPLAYABLE FILE, and then skips to the next file.

***Connecting a USB Flash Memory Device***

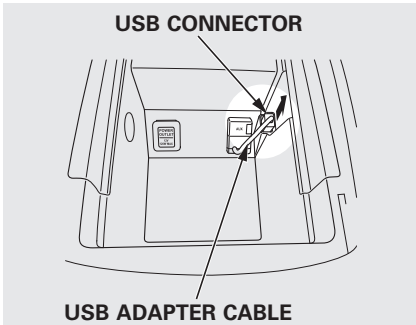


1. Pull out the USB connector from the holder.

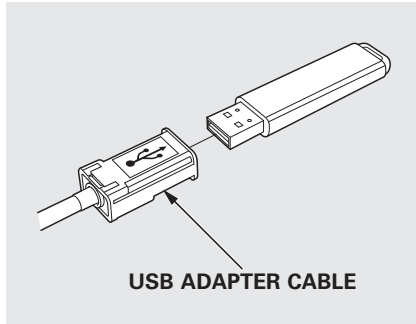


2. Connect the USB flash memory device to the USB adapter cable correctly and securely.

When the USB flash memory device is connected, the USB indicator is shown in the display.

***Text Data Display Function***

Each time you press the TITLE button, the display mode shows you in sequence, the folder name, the file name, the artist name, the album name, the song name, all of them, or name off (which turns off the text display).

The display shows up to about 14 characters (including spaces) of the selected data.

***To Change or Select Files***

Use the SKIP bar while a USB flash memory device is playing to select passages and change files.

**SKIP** – Each time you press and release the ▶▶| side of the SKIP bar, the system skips forward to the beginning of the next file. Press and release the |◀◀ side of the bar, to skip backward to the beginning of the current file. Press it again to skip to the beginning of the previous file.

To move rapidly within a file, press and hold either side (▶▶| or |◀◀/▶ or ◀) of the SKIP bar or the TUNE bar.

Turning the selector knob to the right or the left also changes the file.

**Folder Selection** – To select a different folder, press and release either side of the CATEGORY bar. Press the + side to skip to the next folder, or press the – side to skip to the beginning of the previous folder.

***To Select a File from Folder and File Lists***

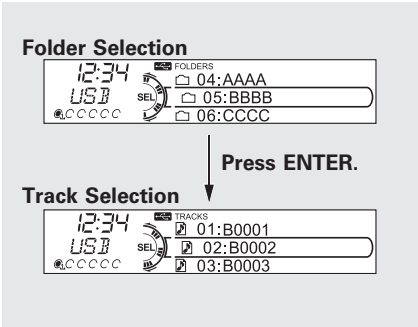


You can also select a folder or file from the list by using the selector knob. Push the selector knob (ENTER) to switch the display to the folder list, then turn the selector knob to select a folder. Press ENTER to change the display to the file list, then turn the same knob to select a file. Press ENTER to set your selection.

*CONTINUED*

Pressing the RETURN button goes back to the previous display and pressing the SETUP button cancels this setting mode.

***To Select Repeat, Random or Scan Mode:***

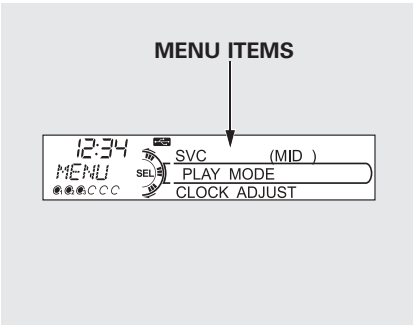


You can select any type of repeat, random and scan modes by using the SETUP button and the selector knob. Push the SETUP button to display the menu items, then turn the selector knob to select “PLAY MODE.” Press the selector knob (ENTER) to set the selection.

Turn the selector knob to select an appropriate repeat, random or scan mode, then press the selector knob (ENTER) to set your selection.

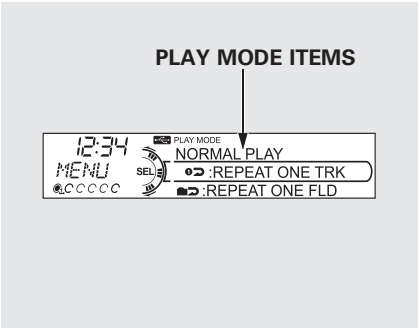


To cancel the selected mode, press the SETUP button and turn the selector knob to show “PLAY MODE,” then press ENTER. When you see “NORMAL PLAY,” press ENTER again.

**REPEAT ONE TRK** – This feature continuously plays a file. Select “NORMAL PLAY” to turn it off. Pressing either side of the SKIP bar also turns off this feature.

**REPEAT ONE FLD** – This feature replays all the files in the selected folder in the order they are stored. Select “NORMAL PLAY” to turn it off. Pressing either side of the CATEGORY bar also turns off this feature.

**RANDOM IN FLD** – This feature plays the files in the selected folder in random order. You will see RANDOM IN FLD icon in the display. Select “NORMAL PLAY” to turn it off.

**RANDOM ALL** – This feature plays all files in all folder in random order. Select “NORMAL PLAY” to turn it off.

**SCAN TRK** – This function samples all files in the selected folder in the order they are stored. To activate the scan feature, press and release the SCAN side of the SCAN/A.SEL bar. You will see SCAN in the display. You will get a 10 second sampling of each file in the folder. Press and hold the SCAN side of the bar to get out of the scan mode and play the last file sampled.

You can also select the scan feature from the menu items with the selector knob (see page 268).



*CONTINUED*

**SCAN FLD** – This function samples the first file in each folder in the order they are stored. To activate the folder scan feature, press and release the SCAN side of the SCAN/A.SEL bar repeatedly. You will see SCAN FLD icon in the display. You will get a 10 second sampling of the first file in each folder. Press and hold the SCAN side of the bar to get out of the folder scan mode and play the last file sampled.

You can also select the folder scan feature from the menu items with the selector knob (see page 268).

Select "NORMAL PLAY" to turn either scan feature off. Pressing either side of the CATEGORY or SKIP bar also turns off the feature.

**To Stop Playing a USB Flash Memory Device**

To change modes, press the AM/FM or «XM» button. Press the DISC button to switch to the disc mode. Press the USB/AUX button to switch the audio mode between the USB or *Bluetooth*® audio.

You can also press the MODE button on the steering wheel to change modes.

If you reconnect the same USB flash memory device, the system will begin playing where it left off.

***Disconnecting a USB Flash Memory Device***

You can disconnect the USB flash memory device at any time even if the USB mode is selected on the audio system. Make sure to follow the USB flash memory device's instructions when you remove it.

**USB Flash Memory Device Error Messages**

If you see an error message in the display, see page 271.

# USB Flash Memory Device Error Messages (Models without navigation system)

If you see an error message on the audio display while playing a USB flash memory device, find the solution in the chart to the right. If you cannot clear the error message, take your vehicle to your dealer.

| Error Message | Solution |
|---|---|
| BAD USB DEVICE<br>PLEASE CHECK OWNER'S MANUAL | USB flash memory device is drawing too much current. Check owner's manual for compatible USB devices. |
| ERROR | Internal USB ROM Error. Try a different USB device. |
| NO DATA | No USB flash memory device is connected. Connect a USB flash memory device. |
| NO SONG | No files stored on USB flash memory device. Store files on your USB flash memory device. |
| UNSUPPORTED | USB flash memory device connection has not been established. Reconnect your USB flash memory device. |
| UNPLAYABLE FILE | Files in the USB flash memory device are RDM or an unsupported format. This error message appears for a few seconds, then the next song plays. |

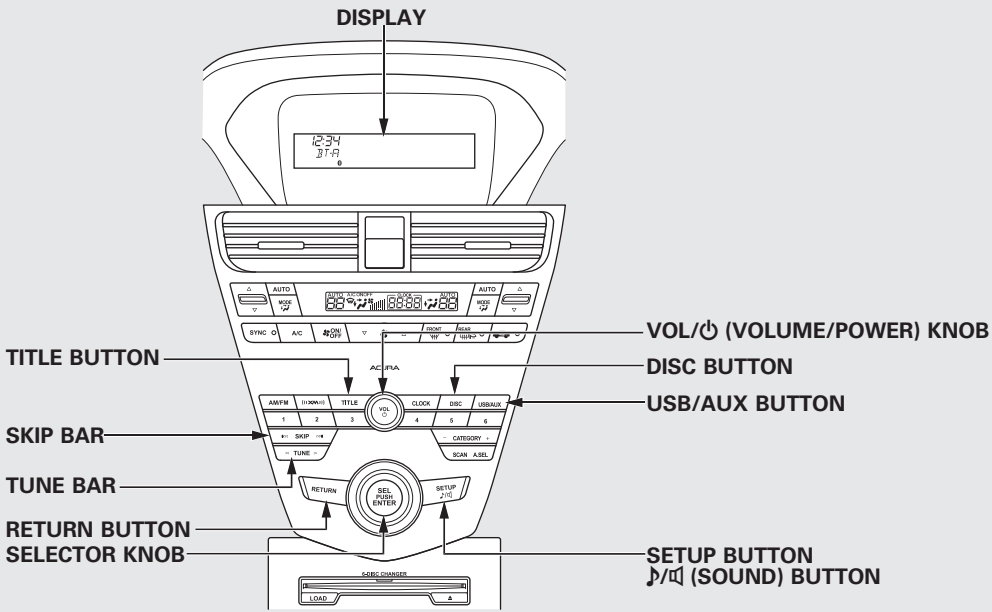
DISPLAY
VOL/⏻ (VOLUME/POWER) KNOB
TITLE BUTTON
DISC BUTTON
USB/AUX BUTTON
SKIP BAR
TUNE BAR
RETURN BUTTON
SELECTOR KNOB
SETUP BUTTON
♪/🔊 (SOUND) BUTTON

Your vehicle is equipped with a *Bluetooth*® audio system, which allows you to listen to streaming audio from your Bluetooth audio compatible phone. This function is only available on Bluetooth Audio Compatible phones that are paired and linked to the vehicle's *Bluetooth*® HandsFreeLink® (HFL) system (see page 399).

Not all Bluetooth-enabled phones with streaming audio capabilities are compatible with the system. You can find an approved phone by visiting *www.acura.com/handsfreelink,* or by calling the HandsFreeLink® consumer support at 1-888-528-7876. In Canada, visit *www.acura.ca,* or call 1-888-9-ACURA-9.

**NOTE:** In some states, it may be illegal to perform some data device functions while driving.

## To Play *Bluetooth*® Audio Files

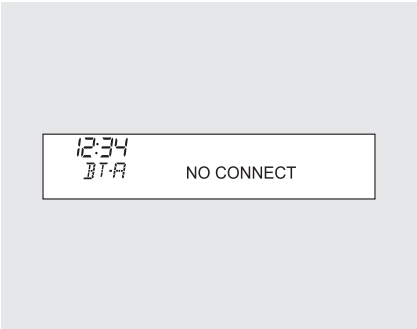


Make sure that your phone is paired and linked to the HFL.
Press the USB/AUX button* with the ignition switch in the ACCESSORY (I) or ON (II) position. The audio display shows the *Bluetooth*® Audio message and mark. Until the phone is recognized, you will see “NO CONNECT” on the display. This message will go off when the phone is recognized, then the system begins to play.

After a device is linked, the name of the device will appear on the audio display.

If more than one phone is paired to the HFL system, there will be delay before the system begins to play.

To begin to play the audio files, you may need to operate your phone. If so, follow the phone maker's operating instructions.

*: If an iPod, USB flash memory device, or audio unit connected to the auxiliary input jack was selected at the last mode, you will see iPod, USB, or AUX in the audio display. Push the USB/AUX button again to play audio files from your *Bluetooth*® Audio phone.

In the following conditions, the display shows “NO CONNECT” message.

- The phone is not linked to HFL.

*CONTINUED*

- The phone is not turned on.
- The phone is not in the vehicle.
- Another HFL compatible phone, which is not compatible for *Bluetooth*® Audio, is already connected.

***To skip a file***
Press the ►►I side of the SKIP bar to skip forward to the next file, and press the I◄◄ side to skip backward to the beginning of the current file. Push the I◄◄ side again to skip to the previous file.

Turning the selector knob to the right or left also changes a file.

The skip function may not be available on some devices.

***To pause or resume a file***
The resume/pause mode can stop playing a file temporarily. Press the SETUP button to display the audio settings.

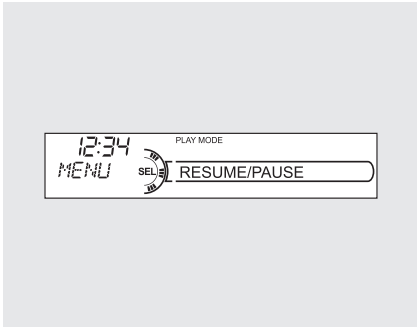


Turn the selector to select RESUME/PAUSE mode, then press ENTER to set your selection. Repeat to resume play.

**NOTE:** The pause function may not be available on some phone devices.

### *To change sound settings*

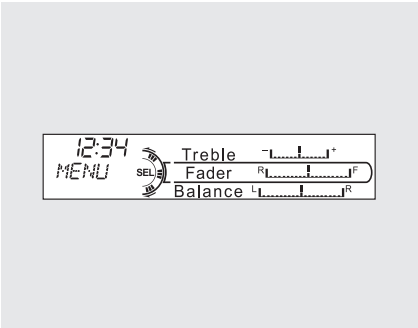


Press the SETUP button to display the audio settings. Turn the selector to select a desired sound mode, then press ENTER to set your selection. Turn the selector to your liking (see page 236 for more sound setting information).

### *To switch to HFL mode*

If you receive a call when the *Bluetooth*® Audio is playing, press the HFL Talk button on the steering wheel. The display switches to the HFL mode (see page 400).

After ending the call, press the HFL Back button to go back to the *Bluetooth*® Audio mode.

If you receive a call while the system is in the pause mode, the mode will be canceled and *Bluetooth*® Audio will continue to play.

### *To turn off the Bluetooth® Audio mode*

Select any other audio mode by pressing a button: AM/FM, ((XM)) or DISC, on the audio control panel, or press the MODE button on the steering wheel to select another audio mode. If an iPod or USB flash memory device is connected to the USB adapter cable, or audio unit is connected to AUX jack, pressing the USB/AUX button also changes a mode.

Switching to another mode pauses the music playing from your phone.



*CONTINUED*

*As required by the FCC:*
*This device complies with Part 15 of the FCC rules. Operation is subject to the following two conditions: (1) This device may not cause harmful interference, and (2) this device must accept any interference received, including interference that may cause undesired operation.*

*Changes or modifications not expressly approved by the party responsible for compliance could void the user's authority to operate the equipment.*

*This device complies with Industry Canada Standard RSS-210.*
*Operation is subject to the following two conditions: (1) this device may not cause interference, and (2) this device must accept any interference that may cause undesired operation of the device.*

### Interface Dial

Most audio system functions can still be controlled by standard buttons, dials, and knobs, but some functions can only be accessed using the interface dial. The interface dial has two parts, a dial and a selector.

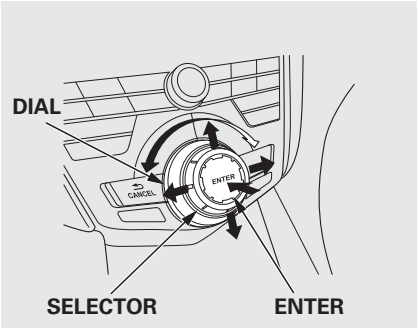


The dial turns left and right. Use it to make selections or adjustments to a list or menu on the screen.

The selector can be pushed left, right, up, down, and in. Use the selector to scroll through lists, to select menus, and to highlight menu items. When you make a selection, push the center of the selector (ENTER) to go to that selection.

### Voice Control System

The audio system, including the music search feature Song By Voice™, can be operated by voice control. See the navigation system manual for complete details.

### Personalization Setting

When you unlock the doors with your remote and turn the audio system on, the driver's ID (Driver 1 or Driver 2) is detected, and the radio presets and sound level settings (see page 287) are turned to the respective memorized mode automatically.

# Playing the AM/FM Radio (Models with navigation system)

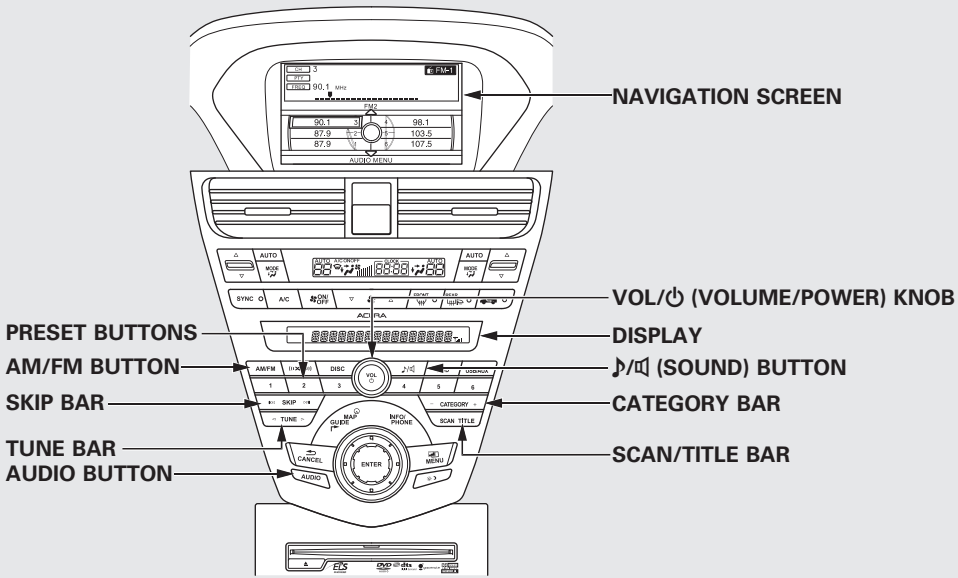

## To Play the AM/FM Radio

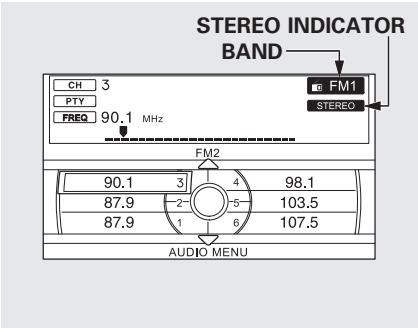


The power mode must be in ACCESSORY or ON. Press the AUDIO button to view the audio control display. Turn the system on by pressing the VOL/ ⏻ knob or the AM/FM button. Adjust the volume by turning the VOL/ ⏻ knob.

Your vehicle has the engine start/ stop button instead of an ignition switch. For more information to select the power mode, see page 195.

The band and frequency that the radio was last tuned to are shown on the display. To change bands, press the AM/FM button. You can also change bands by pushing the interface selector up. Each time you push it up, the band will change to FM1, FM2 or AM. On the FM bands, STEREO will be shown on the navigation screen and ST on the display, if the station is broadcasting in stereo. Stereo reproduction on AM is not available.

## To Select a Station

You can use any of five methods to find radio stations on the selected band: tune, skip (seek), scan, the preset buttons, and auto select. On the FM band, you can also use the features provided by the radio data system (RDS). For more information on the RDS, see page 282.



*CONTINUED*

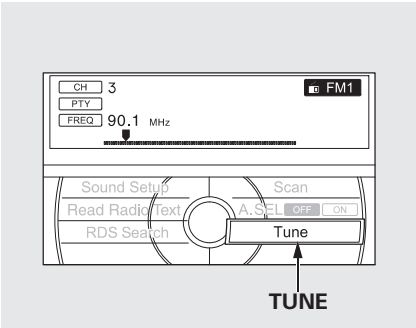


**TUNE** – Use the TUNE bar to tune the radio to a desired frequency. Press the ▶ side of the bar to tune to a higher frequency, or the ◀ side to tune to a lower frequency. To tune with the interface dial, push the interface selector down, and turn the interface dial to select Tune. Then press ENTER on the interface selector, and turn the interface dial to the desired frequency. To exit the TUNE mode, press ENTER on the interface selector, then push the interface selector up to go back.

**SKIP (SEEK)** – The skip (seek) function searches up and down from the current frequency to find a station with a strong signal. To activate it, press either side (⏮ or ⏭) of the SKIP bar, then release it.

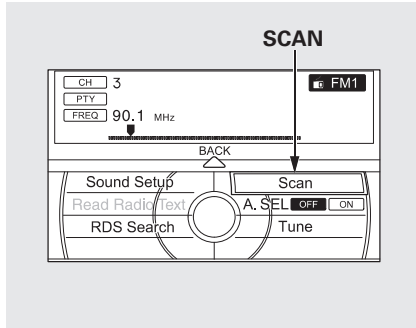


**SCAN** – The SCAN function samples all stations with strong signals on the selected band. To activate it, press the SCAN side of the SCAN/TITLE bar, then release it.

To scan with the interface dial, push the interface selector down, and turn the interface dial to select Scan, then press ENTER on the interface selector.

You will see SCAN on the screen. The system will scan for a station with a strong signal. When it finds one, it will stop and play that station for about 10 seconds. If you do nothing, the system will then scan for the next strong station and play it for 10 seconds. When it plays a station that you want to listen to, press the SCAN side of the bar again.

**Preset** – Each preset button or preset icon can store one frequency on AM and two frequencies on FM.

*To store a preset memory location:*

1. Select the desired band, AM or FM. FM1 and FM2 let you store six stations each.
2. Use the tune, skip (seek), scan, or RDS function to tune the radio to a desired station.
3. Press the preset button, and hold it until you hear a beep. You can also store frequencies with the interface dial. Select the preset icon you want to store the frequency on, then press ENTER on the interface selector, and hold it until you hear a beep.
4. Repeat steps 1 through 3 to store a total of six stations on AM and twelve stations on FM.

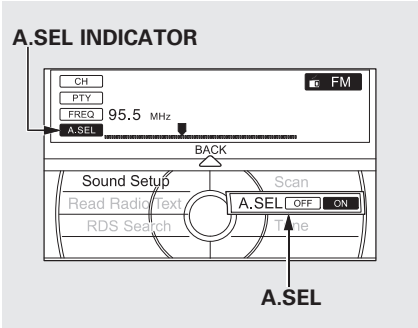


**AUTO SELECT** – If you are traveling and can no longer receive your preset stations, you can use the auto select feature to find strong signal stations in the local area.

*CONTINUED*

Push the interface selector down to display the AUDIO MENU. Turn the interface dial to select A.SEL, then press ENTER on the interface selector. Turn the interface dial to select ON, then press ENTER on the interface selector. You will see A.SEL on the display and the audio control display (if selected), and the system goes into auto select mode for several seconds.

The system stores the frequencies of six AM and twelve FM stations in the preset buttons (icons).

You will see “0” displayed if auto select cannot find a strong station for every preset button (icon).

If you do not like the stations auto select has stored, you can store other frequencies on the preset buttons (icons) as previously described.

*To cancel auto select,* select A.Sel on the audio menu again and turn the interface dial to select A.SEL OFF. This restores the presets you originally set.

For information on FM/AM radio frequencies and reception, see page 369.

**Radio Data System (RDS)**

On the FM band, you can select a favorite station and display the program service name according to the information provided by the radio data system (RDS) if the station has the RDS information available.

***RDS INFO Display***

The RDS INFO display function shows the name of the station you are listening to. With the audio system on and the FM band selected, you can turn this function on or off.

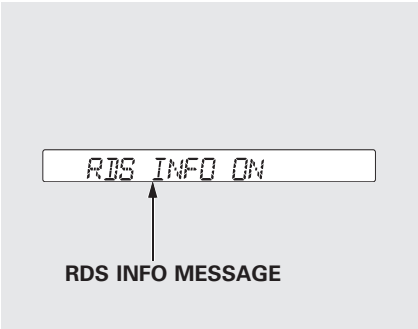


To switch the RDS INFO display function on and off, press and release the TITLE side of the SCAN/TITLE bar. With the system on, you will see the “RDS INFO ON” message on the display. If the station you are listening to is an RDS station, the displayed frequency switches to the station name.

If the station you are listening to is not an RDS station, the audio screen and the display continue to show the frequency.

When you turn off this function by pressing the TITLE side of the bar, the display shows “RDS INFO OFF.”

**NOTE:** If the station you are listening to is an RDS station, the audio screen will always display the RDS information.

### *Radio Data System (RDS) Category*

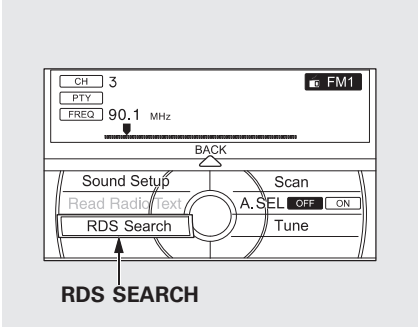


On the FM band selected, you can select the program type provided by the RDS. Press the AUDIO button to display the radio information on the screen. Push down the interface selector, then turn the interface dial to select RDS Search. Press ENTER to set your selection. The principal RDS categories are shown as follows:

*CONTINUED*

ALL: All RDS category stations
ROCK: Rock, classic rock and soft rock music
COUNTRY: Country music
SOFT: Adult hits and soft music
TOP 40: Top 40 hits
OLDIES: Nostalgia music and oldies
R & B: Rhythm and blues, and soft rhythm and blues
RELIGION: Religious music and religious talk
CLASSIC: Classical music
JAZZ: Jazz
INFO: News, information, sports, talk, foreign language, personality, public, college, and weather
TRAFFIC: Traffic information

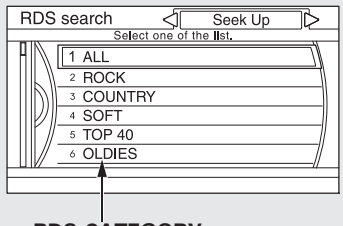


RDS CATEGORY

Turn the interface dial to select an RDS category. You can use the Seek Up, Seek Down, or Scan function to find radio stations on the selected RDS category by pressing the interface selector to the left or the right. Press ENTER to set your selection. If you do nothing while the RDS category is selected, the selected category is canceled.

***RDS Category Search***

This function searches up and down for strong signal frequencies that carries the selected RDS category information. This can help you to find a station in your favorite category.

If the system does not find a station, “NOTHING” will blink for about 5 seconds on the navigation screen and the display, and the system will go back to the last selected station.

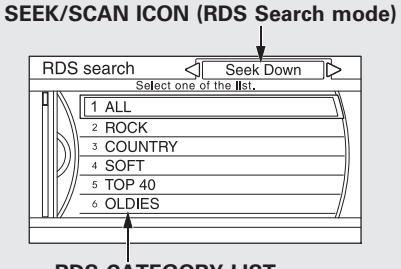

SEEK is selected.

To activate RDS category search with the interface dial, push the AUDIO button to display the FM radio information on the screen. Push the interface selector down, and turn the interface dial to select RDS search. Press ENTER on the interface selector. The screen shows you the RDS category list.

Turn the interface dial to the desired RDS category.

While the RDS category is selected, move the interface selector to the left or right to select Seek Up, Seek Down, or Scan in the upper right corner of the screen. When you press and release ENTER to select the RDS category, RDS category search (Seek Up/Down) starts.

***RDS Category SCAN***

The scan function samples all stations with strong signals on the selected RDS category one by one. You will also see the selected RDS category name blinking in the display while scanning it. When the system finds one, it will stop and play that station for about 10 seconds.

If you do nothing, the system will scan for the next strong station and play it for 10 seconds. When it plays a station that you want to listen to, press the SCAN side of the SCAN/TITLE bar again.

If the system does not find a station, “NOTHING” will blink for about 5 seconds on the navigation screen and the display, and the system will go back to the last selected station.



*CONTINUED*

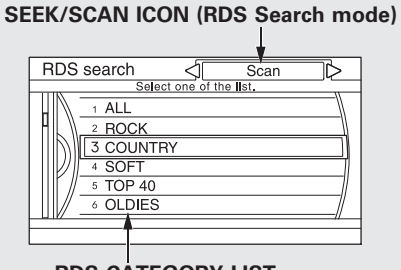

SCAN is selected.

To activate RDS category scan with the interface dial, push the AUDIO button to display the FM radio information on the screen. Push the interface selector down, and turn the interface dial to select RDS search on the audio menu. Press ENTER on the interface selector. The screen shows you the RDS category list.

Turn the interface dial to the desired RDS category.

While the RDS category is selected, move the interface selector to the left or the right to select Scan. When you press and release ENTER to select the RDS category, RDS program Scan starts.

***Radio Text Display***

This function displays the radio text information of the selected RDS station.

If the selected RDS station has the radio text information, you will see the text indicator on the screen.

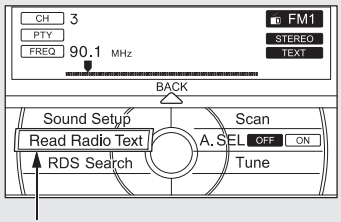


READ RADIO TEXT

To activate radio text display, use the interface dial. Push the interface selector down, and turn the interface dial to select Read Radio Text. Press ENTER on the interface selector to enter the setting.

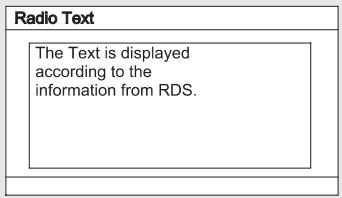


The display shows up to 64 characters on the selected RDS station.

## Adjusting the Sound

BASS, TREBLE, FADER, and BALANCE are each adjustable. You can also adjust the strength of the sound coming from the center and subwoofer speakers. In addition, you can set the Dolby PL (ProLogic) II and Speed-sensitive volume compensation (SVC).

These adjustments can be made with the ♪/🔈 (Sound) button or the interface dial.



*CONTINUED*

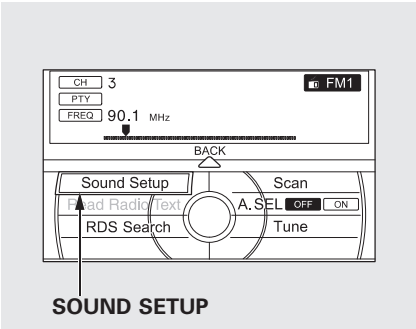


To adjust the sound, press the AUDIO button, push the interface selector down, and turn the interface dial to Sound Setup. Then press ENTER on the interface selector.

Select the mode you want to adjust by turning the interface dial.

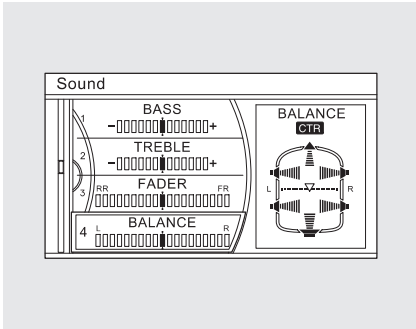


You can also adjust the sound by pushing the ♪/🔈 (Sound) button repeatedly. Each mode is shown in the display as you push the button.

Turn the VOL/ ⏻ knob or interface knob to adjust the setting to your liking. You can check the level on the navigation screen or on the display. When the level reaches the center, you will see “C” in the display.

The system will return to the audio playing mode in the center display about 5 seconds after you stop adjusting a mode.

If you do not make an adjustment within 5 seconds, you will need to select the mode again.

**BASS/TREBLE** – To adjust bass and treble, select BASS or TREBLE, and press ENTER on the interface selector. The current setting is shown on the display. Turn the interface dial or VOL/ ⏻ knob to the desired level, and enter your selection by pressing ENTER on the interface selector.

**FADER/BALANCE** – These modes adjust the strength of the sound coming from each speaker. Fader adjusts the front-to-back strength, while balance adjusts the side-to-side strength. To adjust fader and balance, select FADER or BALANCE, then press ENTER on the interface selector. The current setting is shown on the screen. Turn the interface dial or VOL/ ⏻ knob to the desired level, and enter your selection by pressing ENTER on the interface selector. To equalize the fader or balance, turn the interface dial or VOL/ ⏻ knob until the marks on the sound grid come to the center of the adjustment bar.

If the fader adjustment is set to F9 (maximum front level), the subwoofer is turned off.

If the fader is set to R9 (maximum rear level), the center speaker is off.

**CENTER** – Adjusts the strength of sound from the center speaker.

**SUBWOOFER** – To adjust the strength of the sound from the subwoofer speaker, select it and press ENTER on the interface selector. Turn the interface dial to the desired level, and enter your selection by pressing ENTER on the interface selector.

***Speed-sensitive Volume Compensation (SVC)***

The SVC mode controls the volume based on vehicle speed. The faster you go, the louder the audio volume becomes. As you slow down, the audio volume decreases.

The SVC has four modes: OFF, LOW, MID, and HIGH. To change the SVC mode, select SVC, then press ENTER on the interface selector. The current setting is shown on the screen. Turn the interface dial to the desired level, and enter your selection by pressing ENTER on the interface selector. If you feel the sound is too loud, choose low. If you feel the sound is too quiet, choose high.



*CONTINUED*

**Dolby PL (ProLogic) II** – Dolby PL (ProLogic) II signal processing creates multi-channel surround sound from 2 channel stereo audio sources. Dolby ProLogic II can only activate when listening to DISC (CD-DA, MP3, WMA, AAC), XM radio, AUX (USB, iPod®, AUX, *Bluetooth*® Audio), and HDD Audio. When ProLogic II is available, "PL II" is shown in the audio display.

When ProLogic II is not available in the selected audio source, "DOLBY PL II N/ A" is shown on the center display.

ProLogic ON/OFF settings are independently controlled for DISC, XM, HDD Audio, and AUX sources.

To set this feature on or off, select Dolby PL II, and press ENTER on the interface selector. Rotate the interface dial to ON or OFF, and press ENTER.

Manufactured under license from Dolby Laboratories. Dolby, Pro Logic, MLP Lossless and the double-D symbol are trademarks of Dolby Laboratories.

**NOTE:** In some audio playing modes (XM, AUX), when DPLII is on, the music coming from the rear speakers may sound distorted. This is due to compression of the music, and it does not indicate a problem with the setting.

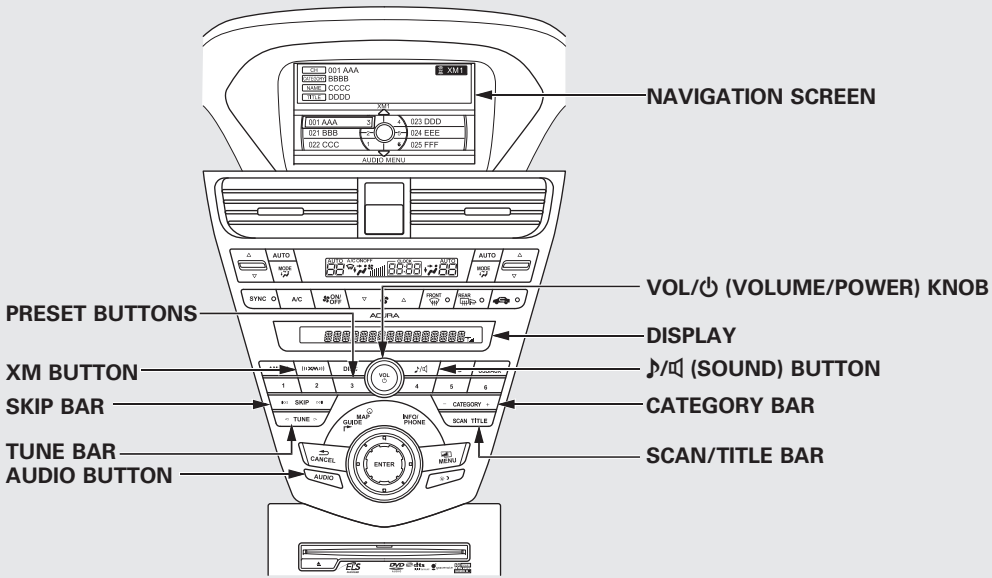
NAVIGATION SCREEN
VOL/⏻ (VOLUME/POWER) KNOB
DISPLAY
♪/🔇 (SOUND) BUTTON
CATEGORY BAR
SCAN/TITLE BAR
PRESET BUTTONS
XM BUTTON
SKIP BAR
TUNE BAR
AUDIO BUTTON

*CONTINUED*

Your vehicle is capable of receiving XM® Radio anywhere in the United States and Canada, except Hawaii, Alaska, and Puerto Rico. XM is a registered trademark of Sirius XM Radio®, Inc. and XM CANADA® is a registered business name of Canadian Satellite Radio Inc.

XM Radio receives signals from two satellites to produce clear, high-quality digital reception. It offers many channels in several categories. Along with a large selection of different types of music, XM Radio allows you to view channel and category selections in the audio display.

## Operating the XM Radio

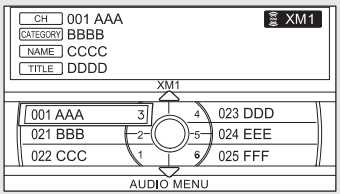


To listen to XM radio, set the power mode to ACCESSORY or ON. Push the «XM» button to select the XM radio. The last channel you listened to will show in the audio screen (if selected) and the center display. Adjust the volume by turning the VOL/ ⏻ knob.

Your vehicle has the engine start/stop button instead of an ignition switch. For more information on how to select the power mode, see page 194.

Each time you push the interface selector up, the band will change to XM1 or XM2. Push the AUDIO button to display XM information on the screen. You can operate the XM radio system with the interface dial.

**MODE** – To switch between the category mode and channel mode, push the interface selector down to display AUDIO MENU, then turn the interface dial to select Mode, and press ENTER on the interface selector.

Turn the interface dial to select CH or CAT, then press ENTER on the interface selector. Move the interface selector up to go back.

You can also switch the mode by pressing the TITLE side of the SCAN/TITLE bar for 3 seconds.

In the category mode, such as Jazz, Rock, Classical, etc., you can navigate through all of the channels within that category. In the channel mode, you can select all of the available channels.

Each time you press and release the TITLE side of the bar, the display changes in the following sequence: CATEGORY NAME, NAME (artist name), TITLE (music title), and CHANNEL NAME (channel name).

On the screen, you will see the selected CHANNEL (number), CATEGORY, NAME (artist name), and TITLE (music title).

You may experience periods when XM Radio does not transmit the artist's name and song title information. If this happens, there is nothing wrong with your system.

**TUNE** – Press either side of the TUNE bar to change channel selections. Press the ▶ side of the bar for higher numbered channels and the ◀ side for lower numbered channels. You can also change channels with the interface selector.

Push it down to select AUDIO MENU. Then turn the interface dial to select TUNE and press ENTER on the interface selector. Turn the interface dial to exit the tune mode and press ENTER on the interface dial.

**CHANNEL LIST** – Push down the interface selector to select AUDIO MENU, then turn the interface dial to select Channel List and press ENTER on the selector. Turn the interface dial to select a channel, then press ENTER to set your selection.

**CATEGORY ( – or + )** – Press either side of the bar to select another category.



*CONTINUED*

**SCAN** – The scan function gives you a sampling of all channels while in the channel mode. In the category mode, only the channels within that category are scanned. To activate SCAN, press the SCAN side of the SCAN/TITLE bar. You will see SCAN on the screen and display.

The system plays each channel in numerical order for a few seconds, then selects the next channel. When you hear a channel you want to continue listening to, press the SCAN side of the bar to cancel.

**CHANNEL SCAN** – This function samples all channels. Push down the interface selector to select AUDIO MENU, then turn the interface dial to select Channel Scan and press ENTER on the interface selector.

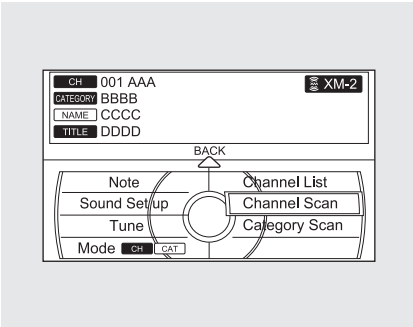


**CATEGORY SCAN** – This function samples the stations in the selected category. Push down the interface selector to select AUDIO MENU, then turn the interface dial to select Category Scan and press ENTER on the interface selector.

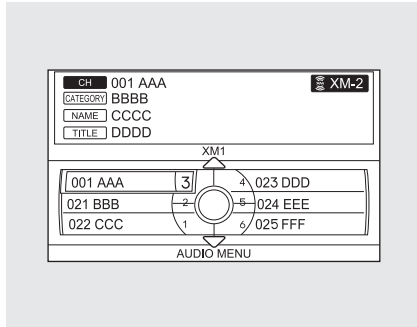


**Preset** – You can store up to 12 preset channels using the six preset buttons. Each button stores one channel from the XM1 band and one channel from the XM2 band.

To store a channel:

1. Press the (( XM )) button. Either XM1 or XM2 will show on the display.
2. Use the tune, channel list, or scan function to tune to a desired channel.

3. Pick the preset button you want for that channel. Press and hold the preset button until you hear a beep. You can also pick the number with the interface dial. Select your desired number and press and hold ENTER on the interface selector.
4. Repeat steps 2 and 3 to store the first six channels.
5. Press the «XM» button or scroll up again. The other XM band will be shown. Store the next six channels using steps 2 and 3.

   Once a channel is stored, press and release the proper preset button to tune to it.

**XM Radio Display Messages**

**"OFF AIR"** – The channel currently selected is no longer broadcasting.

**"LOADING"** – XM is loading the audio or program information.

**"UPDATING"** – The encryption code is being updated. Wait until the encryption code is fully updated. Channels 0 and 1 should still work normally.

**"NO SIGNAL"** – The signal is currently too weak. Move the vehicle to an area away from tall buildings, and with an unobstructed view of the southern horizon.

**"- - - -"** – The selected channel number does not exist, or is not part of your subscription, or this channel has no artist or title information at this time.

**"CHECK ANTENNA"** – There is a problem with the XM antenna. Please consult your dealer.



*CONTINUED*

The XM satellites are in orbit over the equator; therefore, objects south of the vehicle may cause satellite reception interruptions. To help compensate for this, ground-based repeaters are placed in major metropolitan areas. Satellite signals are more likely to be blocked by tall buildings and mountains the farther north you travel from the equator.

Depending on where you drive, you may experience reception problems. Interference can be caused by any of these conditions:

- Driving on the north side of an east/west mountain road.
- Driving on the north side of a large commercial truck on an east/west road.
- Driving in tunnels.

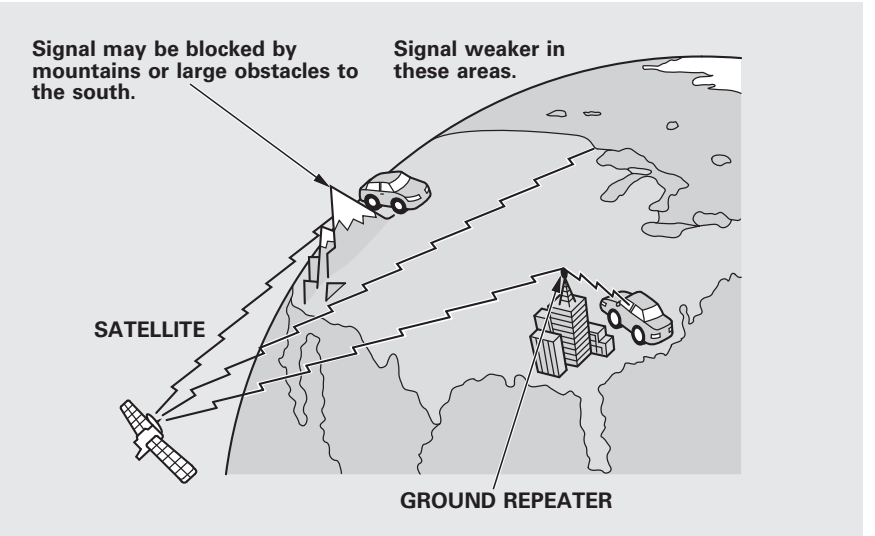


- Driving on a road beside a vertical wall, steep cliff, or hill to the south of you.
- Driving on the lower level of a multi-tiered road.
- Driving on a single lane road alongside dense trees taller than 50 ft. (15 m) to the south of you.

There may be other geographic situations that could affect XM Radio reception.

*As required by the FCC:*
*Changes or modifications not expressly approved by the party responsible for compliance could void the user's authority to operate the equipment.*

***Note Function***
*U.S. models only*

This function stores the sound content played on the selected XM satellite radio station with the channel, category, name, and title information.

To activate this function, press and hold the «XM» button for about 3 seconds while a song or passage which you want to store is playing. You can record for up to 10 seconds. To stop recording, press the AM/FM button, «XM» button, or another function button (DISC, HDD, USB/AUX).

Once you store the recorded sound file, you can replay it and confirm the information. The system can store up to 30 sound files. If you continue to store more files, the oldest one will be deleted each time you add new file.

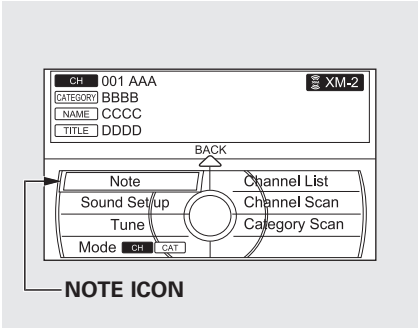


To replay and see the stored file, press the AUDIO button to select the audio display on the navigation screen.

Push down the interface selector to display the audio menu. Turn the interface dial to select Note, then press ENTER.

*CONTINUED*

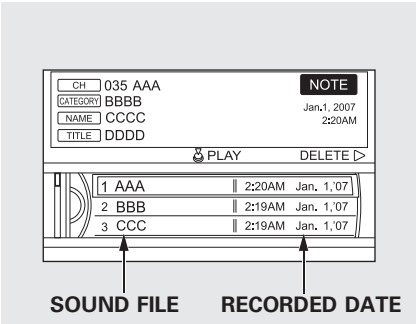


Turn the selector dial to select a sound file, then press ENTER. The display shows the category, name and title information of the selected file and plays the recorded portion of the song.

To delete a file, push the interface selector to the right to select "DELETE." Select "Delete All" or "Delete Selected Item," then press ENTER on the interface selector.

**Receiving XM Radio Service**

If your XM Radio service has expired or you purchased your vehicle from a previous owner, you can listen to a sampling of the broadcasts available on XM Radio. With the power mode in ACCESSORY or ON, press the (( XM )) button. A variety of music types and styles will play.

Your vehicle has the engine start/stop button instead of an ignition switch. For more information on how to select the power mode, see page 194.

If you decide to purchase XM radio service, contact XM® Radio at *www.xmradio.com,* or at 1-800-852-9696. In Canada, contact XM Canada® at *www.xmradio.ca,* or call 1-877-209-0079. You will need to give them your radio I.D. number and your credit card number. To get your radio I.D. number, press and release the ▶ side of the TUNE bar until "0" appears in the display. Your I.D. will appear in the display.

After you have registered with XM Radio, keep your audio system in the satellite radio mode while you wait for activation. This should take about 30 minutes.

While waiting for activation, make sure your vehicle remains in an open area with good reception. Once your audio system is activated, CAT (category) or CH (channel) will appear in the display, and you'll be able to listen to XM Radio broadcasts. XM Radio will continue to send an activation signal to your vehicle for at least 12 hours from the activation request. If the service has not been activated after 36 hours, contact XM Radio. In Canada, contact XM CANADA®.

# Playing a Disc (Models with navigation system)

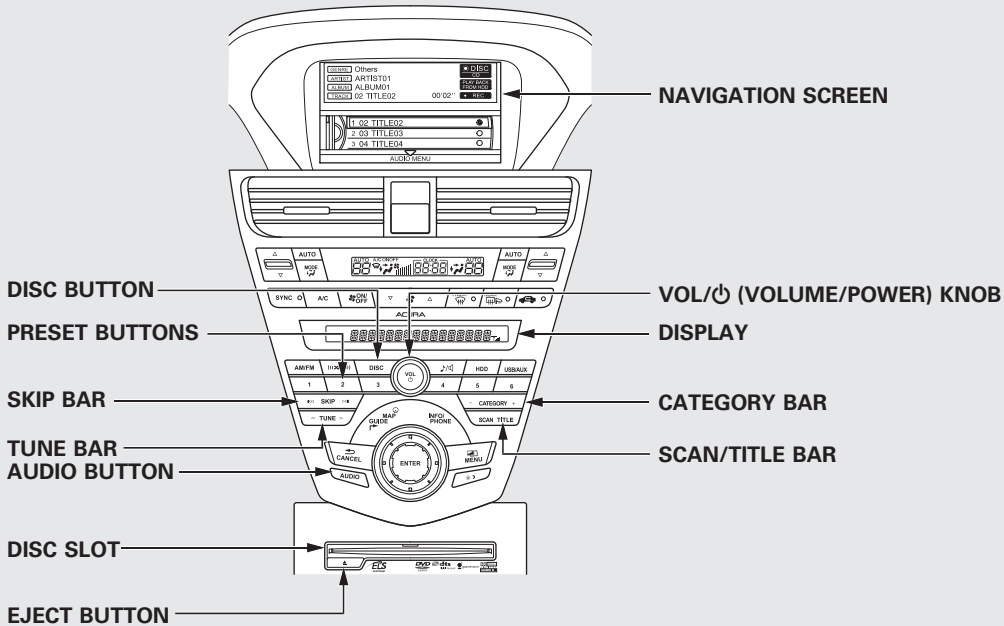

Your vehicle's audio system has an internal disc player. To operate the disc player, the power mode must be ACCESSORY or ON.

Your vehicle has the engine start/stop button instead of an ignition switch. For more information on how to select the power mode, see page 194.

The DISC player can play these disc formats:

- CD (CD-DA, CD-TEXT)
- CD-R/CD-RW (MP3, WMA, AAC)
- DVD-A
- DVD-R/DVD-RW (MP3, WMA, AAC)

If you have a disc that is a combination of CD-DA tracks and MP3/WMA/AAC files, you can choose the format to listen to by pressing and holding the DISC button until you hear a beep.

The disc packages or jackets should have one of these marks.

The disc player can also play MP3, WMA, or AAC format saved on CD-R/RW or DVD-R/RW (see page 306).

**NOTE:**
If a file on an MP3, WMA or AAC disc is protected by digital rights management (DRM), the audio system skips to the next file.

Depending on the software the files were made with, it may not be possible to play some files, or display some text data.

DVD-A discs not meeting DVD verification standards may not be playable.

Video CDs and DVD-V format discs will not work in this unit.

Some CD-DA and CD-ROM mixed discs are not playable.

You cannot load and play 3-inch (8-cm) discs in this system.

*CONTINUED*

It is possible to select up to 999 files for inclusion in CD-Rs and CD-RWs, and up to 3,500 files for inclusion in DVD-Rs and DVD-RWs.

**NOTICE**

*Do not use discs with adhesive labels. The label can curl up and cause the disc to jam in the unit.*

Manufactured under license under U.S. Patent #'s: 5,451,942; 5,956,674; 5,974,380; 5,978,762; 6,487,535 & other U.S. and worldwide patents issued & pending. DTS and DTS Digital Surround are registered trademarks and the DTS logos and Symbol are trademarks of DTS, Inc. © 1996-2008 DTS, Inc. All Rights Reserved.

**To Load a Disc**

Insert a disc about halfway into the disc slot. The drive will pull the disc in the rest of the way to play it. You operate the disc player with the same controls used for the radio. The number of the current track is shown in the display. When playing a disc in MP3, WMA or AAC, the numbers of the current folder and file are shown. The system will continuously play a disc until you change modes.

For information on how to handle and protect compact discs, see page 365.

**To Play a Disc**

Select the disc player by pressing the DISC button. The system will begin playing the last selected track on the disc. You will see the current track position highlighted.

Title information will be displayed by a list when the information is found in the Gracenote® Album Info (Gracenote® Media Database) on the built-in hard disk drive. When you play a CD recorded with text data, you will see the genre, artist name, album and track name on the screen. When you play MP3/WMA/AAC discs, you will see the genre, artist name, album name and track name on the screen. If the disc was not recorded with this information, it will not be displayed.

Each time you press the TITLE side of the SCAN/TITLE bar, the display changes from artist name to album name, to track name and then to normal display that shows the track number and the elapsed time. When playing a disc in MP3/WMA/AAC, the display mode changes from folder name, to file name, to artist tag, to album tag, to track tag, and then to normal display.

### To Change Tracks

Each time you press and release the ▶▶| side of the skip bar, the player skips forward to the beginning of the next track. Press and release the |◀◀ side of the skip bar to skip backward to the beginning of the current track. Press the |◀◀ side again to skip to the previous track. To move rapidly within a track, press and hold either side of the skip bar.

When you insert a CD for the first time, the system automatically starts recording to the hard disc. For information on recording from music CDs, see page 315.

### To Choose a Track

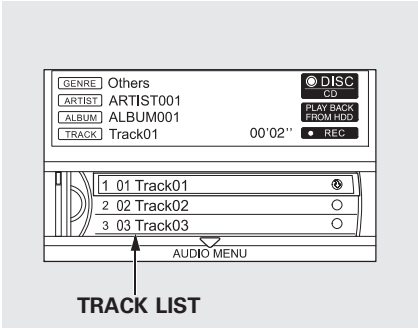


You can also choose a track directly from a track list. If there are no track names, you will see “No Title” displayed. Turn the interface dial to select the desired track, then press ENTER on the interface selector.



*CONTINUED*

## Track Repeat

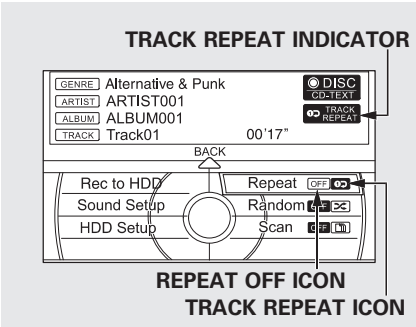


To replay the current track continuously, push the interface selector down while playing a disc. Turn the interface dial to select Repeat on the AUDIO MENU, and press ENTER on the interface selector. Turn the interface dial to select Repeat icon, and press ENTER on the interface selector.

To turn this feature off, turn the interface dial to select OFF icon, and press ENTER on the interface selector.

## Random Play

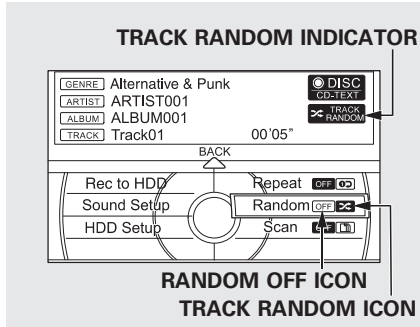


This feature plays the tracks within a disc in random order. When playing MP3, WMA or AAC format discs, all the tracks within the disc are played in random order, regardless of the configuration of the folder.

Push the interface selector down while playing a disc. Turn the interface dial to select Random on the AUDIO MENU, and press ENTER on the interface selector.

Turn the interface dial to select the track random icon, and press ENTER on the interface selector.

To turn this feature off, turn the interface dial to select OFF icon, and press ENTER on the interface selector.

## Track Scan

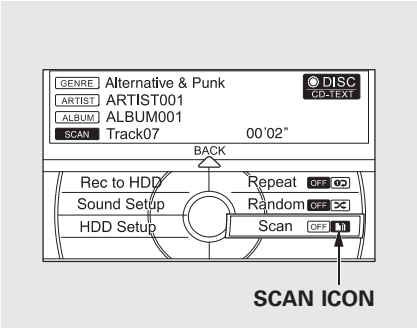


The scan function samples all tracks on the disc in the order they are recorded on the disc.

To activate scan, press the SCAN side of the SCAN/TITLE bar, or push the interface selector down while playing a disc. Turn the interface dial to select Scan on the AUDIO MENU, and press ENTER on the interface selector.

Turn the interface dial to select the Scan icon, and press ENTER on the interface selector. You will hear a 10-second sampling of each track on the disc. When you return to disc mode, the disc will begin playing from where it left off.

To turn this feature off, press the SCAN side of the bar again, or turn the interface dial to select the OFF icon, and press ENTER on the interface selector. The system begins to play the last track sampled.



*CONTINUED*

### To Stop Playing a Disc

To take the system out of disc mode, press the AM/FM button, the «XM» button, the HDD button, or the USB/AUX button. To return to disc mode, press the DISC button.

If you turn the system off while a disc is playing, either with the VOL/ ⏻ knob or the engine start/stop button, the disc will stay in the drive. When you turn the system back on, the disc will begin playing where it left off.

Your vehicle has the engine start/stop button instead of an ignition switch. For more information on how to turn the power mode off, see page 194.

### Playing an MP3/WMA/AAC Disc

This audio system plays CD-ROM, CD-R/RW, DVD-ROM, and DVD-R/RW compressed in MP3, WMA, or AAC formats. You can select up to 255 folders or tracks.

| Disc | Maximum folders* | Maximum files | Maximum layers* |
|---|---|---|---|
| CD-ROM<br>CD-R<br>CD-RW | 255 | 999 | 8 |
| DVD-ROM<br>DVD-R<br>DVD-RW | 255 | 3500 | 8 |

*: Including Root folder

**NOTE:**
Combining a low sampling frequency with a low bitrate may result in extremely degraded sound quality.

To play an MP3/WMA/AAC disc, use the disc controls previously described, along with the following information.

**Changing the Folders**
While playing an MP3/WMA/AAC disc, you can select a folder within the disc by pressing either side of the CATEGORY bar. Each time you press either side of the bar, the folder title and its first file's information appear on the display and on the navigation screen in hierarchical order of the folders which contain files within the disc.

*Changing and Selecting the Folders/ Files*

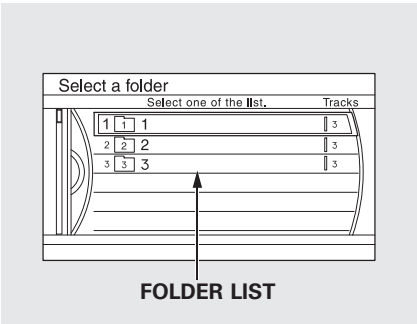


Using the interface selector, you can see the list of all the folders within a disc. While playing an MP3/WMA/ AAC disc, push the interface selector up. The folder list in the currently playing disc will appear on the screen.

If the root folder has some additional folders in the lower layer, they will be listed on the screen.

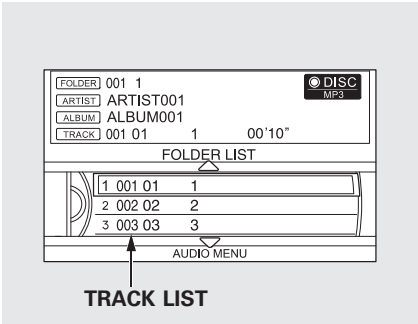


Select a desired folder by turning the interface dial, then press ENTER. The display returns to normal play, and the first track in the selected folder begins to play.

To change a file, turn the interface dial to select a desired file, then press ENTER.

*CONTINUED*

## Folder Repeat

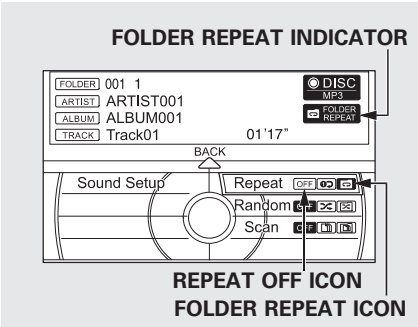


This feature, when activated, replays all files on the selected folder in the order they are compressed. To activate folder repeat play, push the interface selector down while playing a disc. Turn the interface dial to select Repeat on the AUDIO MENU, and press ENTER on the interface selector. Turn the interface dial to select the folder repeat icon, and press ENTER on the interface selector.

To turn this feature off, turn the interface dial to select OFF icon, and press ENTER on the interface selector.

## Folder Random

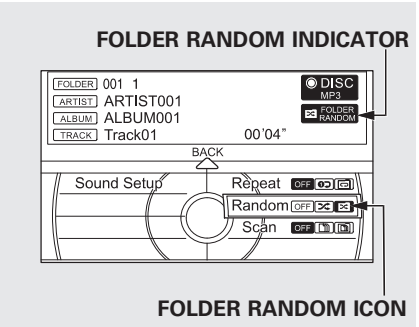


This feature, when activated, plays all files in the current folder in random order. To activate folder random play, push the interface selector down while playing a disc. Turn the interface dial to select Random on the AUDIO MENU, and press ENTER on the interface selector. Turn the interface dial to select the folder random icon, and press ENTER on the interface selector.

To turn this feature off, turn the interface dial to select OFF icon, and press ENTER on the interface selector.

## File Scan

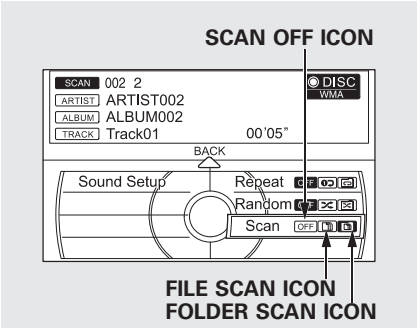


This feature samples all files in the selected folder in the order they are stored. To activate this feature, press the SCAN side of the SCAN/TITLE bar. You can also select the SCAN icon with the interface dial. Push the selector down, turn the dial to select Scan on the AUDIO MENU, then press ENTER. Turn the dial to select the scan icon, then press ENTER. The system begins to play a file for about 10 seconds, and continues to sample the remaining files.

To turn this feature off, press the SCAN side of the bar again, or select OFF icon by turning the dial, then press ENTER.

*CONTINUED*

**Folder Scan**
This feature, when activated, samples the first file of each folder for 10 seconds. To scan a folder, press the SCAN side of the SCAN/TITLE bar. Or, push the interface selector down while playing a disc. Turn the interface dial to select Scan on the AUDIO MENU, and press ENTER on the interface selector. Turn the interface dial to select the folder scan icon, and press ENTER on the interface selector.

The system plays the first file in the first folder for about 10 seconds. If you do nothing, the system will then play the first files in the next folders for 10 seconds. After playing the first file of the last folder, the system plays normally.

To turn this feature off, turn the interface dial to select OFF icon, and press ENTER on the interface selector. The last track sampled begins to play.

**NOTE:**
When playing MP3, WMA or AAC format disc, each time you press the SCAN side of the SCAN/TITLE bar, the system changes in the following sequence: Scan → Scan first track in folder → OFF → Scan.

**Removing Discs from the Disc Player**
To remove the disc, press the eject (⏏) button.

If you do not remove the disc from the slot, the system will reload the disc after 10 seconds. The disc starts playing automatically.

**Playing a DVD-A Disc**
Use the disc controls previously described.

The chart on the right explains the error messages you may see in the display while playing a disc.

If you see an error message in the display while playing a disc, press the eject button. After ejecting the disc, check it for damage or deformation. If there is no damage, insert the disc again.

For additional information on damaged discs, see page 366.

The audio system will try to play the disc. If there is still a problem, the error message will reappear. Press the eject button, and pull out the disc. Insert a different disc. If the new disc plays, there is a problem with the first disc. If the error message cycle repeats and you cannot clear it, take your vehicle to a dealer.

| Error Message | Cause | Solution |
|---|---|---|
| BAD DISC PLEASE CHECK OWNER'S MANUAL | Servo Error | Press the eject button and pull out the disc. Check the disc for serious damage, signs of deformation, excessive scratches, and/or dirt (see page 366 ). Insert the disc again. If the code does not disappear, or the disc cannot be removed, consult your dealer. Do not try to force the disc out of the player. |
| BAD DISC PLEASE CHECK OWNER'S MANUAL PUSH EJECT | Mechanical Error | |
| MECH ERROR | | |
| CHECK DISC | FOCUS Error<br>DISC violates copyright<br>Disc not supported | |
| CHECK DISC LOAD | Load Error | |
| UNSUPPORTED | Track/File format not supported | Current track will be skipped. The next supported track or file plays automatically. |
| HEAT ERROR | High Temperature | Will disappear when the temperature returns to normal. |

# Playing Hard Disc Drive (HDD) Audio (Models with navigation system)

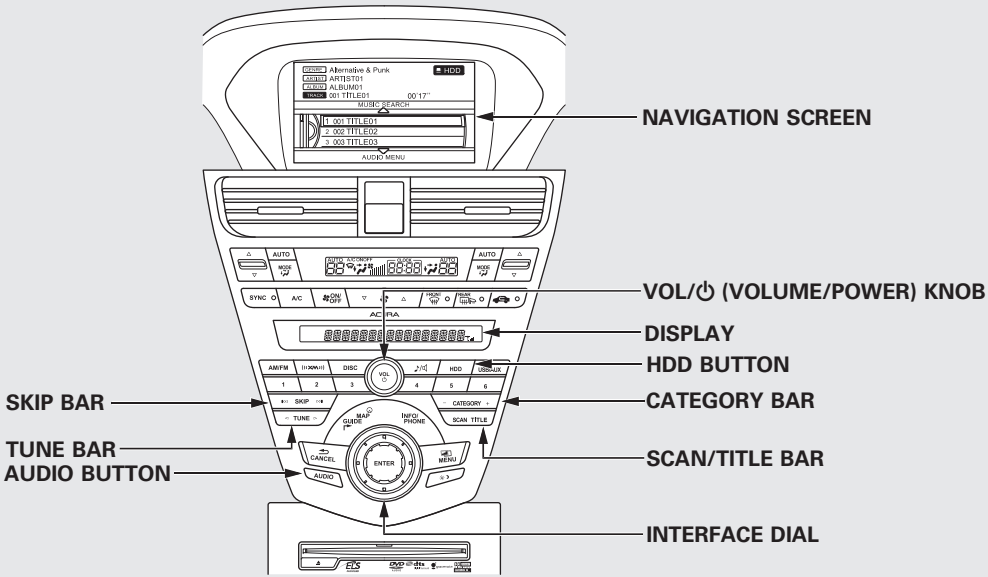

The Hard Disc Drive (HDD) Audio function can record tracks from music CDs to the navigation system's hard disc. This function also allows for various playing methods, such as playing recorded tracks on an artist-by-artist or genre-by-genre basis. For example, you can play the tracks that you want to listen to in any order that you like for each playlist.

**NOTE:**

- Only recordings from a standard CD-DA (44.1 kHz, 16 bit stereo PCM digital sound data) to HDD are supported.
- Digital music files, such as MP3, WMA, AAC etc., in CD-R, DVD-R and USB flash memory devices cannot be copied to HDD. Likewise, digital music files recorded to HDD cannot be copied to CD-R, DVD-R and USB devices.
- Music data recorded on HDD can only be used for personal enjoyment.
- Data is recorded using ultra-efficient compression technology, therefore, sound quality may vary slightly from the original.
- Title information will be displayed when the information is found in the Gracenote® Album Info (Gracenote® Media Database) on the built-in hard disk drive. See page 337.
- Recording function from following media is not supported.
  - CD-DA which prohibits the copy by SCMS
  - CD-DA with copy control
  - SACD (Super Audio CD)
  - DTS-CD
  - DVD-A
  - CD-R/RW
  - DVD-R/RW
  - Copy controlled CDs (Playback cannot be guaranteed)
  - DTS-CDs (Only enabled for playback)

*CONTINUED*

If the HDD is ever replaced, all data will be lost and stored music will not be recovered.

**Playlists**
Playlists are track lists in a certain playback group.

**Original Playlist**
This playlist is automatically generated when the music CD is recorded. The maximum number of original playlists that can be stored to the HDD is 999, with 99 songs on each playlist. Each album name on the music CD is counted as a playlist.

**User Playlist**
The HDD has six playlist folders for user customizing. Each playlist can be edited by the user, and will store up to 999 songs. For more information of how to edit the user playlist, see page 325.

**Track Search Methods**
Songs that have been recorded on the HDD are categorized in groups for easy searching.

There are six categories:
Albums: Album names are arranged in alphabetical order.
Artists: Artist names are arranged in alphabetical order.
Tracks: Track titles are arranged in alphabetical order.
Playlists: Any of six playlists that are arranged by the user
Genres: Songs are arranged by genre.
Ripped Date: Album titles are arranged by date of recording.
For more information on how to search for music, see page 321.

**Recording a Music CD to HDD Audio**
If you play a music CD that has not yet been recorded on the HDD, the system will automatically begin recording to the HDD once the disc is loaded. To turn this feature off, see page 316.

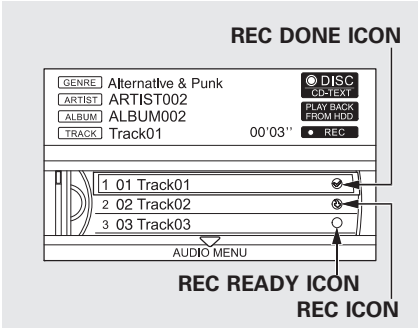


The icons show the recording conditions for each track:
Rec icon: Now recording
Rec ready icon: Next to be recorded
Rec done icon: Recording finished

*CONTINUED*

**NOTE:**

- Please note that there will be no compensation offered in the case of unsuccessful recording of audio data or the loss of audio data due to any cause whatsoever.
- During recording, operation of this product may be slower.
- If you stop the engine or the power system is turned off while recording a CD, there may be pauses between songs when you play back from the HDD.
- Tracks from music CDs are recorded at four times the playback speed. You can listen to tracks as they are being recorded.
- Repeat, random and scan functions are not available during recording.
- You can listen to tracks from other playlists that have already been recorded while recording. Press the HDD button and switch over to HDD Audio.
- With the factory settings, all of the songs on a music CD are automatically recorded.
- Recording settings cannot be changed during recording.
- If the number of songs in the playlist exceeds 999, the oldest song will be overwritten each time you add a new song.

**To Cancel Recording a Music CD to HDD**

In order to suspend recording, push the interface selector down, select Cancel Rec to HDD, and press ENTER on the interface selector.

## Changing the Recording Settings

### *Recording All of the Tracks on a Music CD Manually*

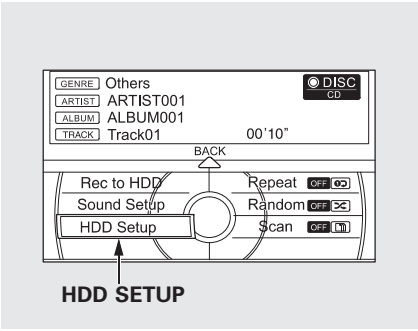


To change the setting to manual mode, push the interface selector down on the HDD screen. Turn the interface dial to select HDD Setup and press ENTER. Turn the interface dial to select Ripping, and press ENTER on the interface selector.

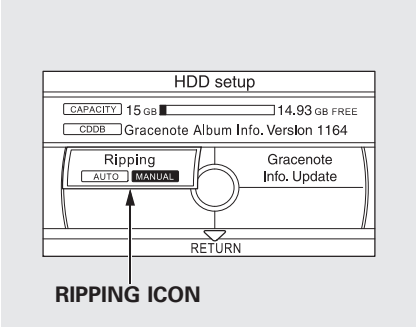


Turn the dial to select Ripping and press ENTER on the interface selector.

Turn the interface dial to select MANUAL and press ENTER on the interface selector.

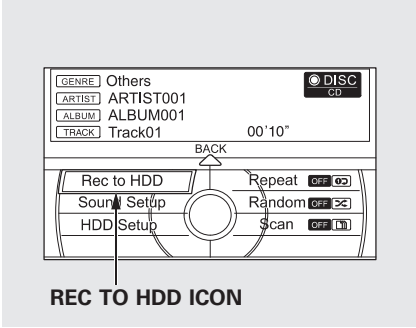


To record the music CD, push the HDD button, then push the interface selector down to display the audio menu. Turn the interface dial to select Rec to HDD, and then press ENTER on the interface selector.

*CONTINUED*

***Recording All of the Tracks on a Music CD Automatically***

To change the setting to automatically record all of the tracks on a music CD, move the interface selector down on the HDD Audio screen. Turn the interface dial to select HDD Setup, and press ENTER on the interface selector.

Turn the interface selector to select Ripping, and press ENTER on the interface selector.

Turn the interface dial to select AUTO, and press ENTER on the interface selector.

## Playing Tracks on HDD

To play tracks on HDD, push the HDD button until the HDD Audio screen appears. Playback will start automatically with the track previously selected.

## Playing the Selected Track

To select tracks, press on the Category bar or the Skip bar.

| Category Bar | |
|---|---|
| + | The next playlist is selected.<br>If you press + during the last playlist, the first playlist is selected. |
| – | The previous playlist is selected.<br>If you press – during the first playlist, the last playlist is selected. |

| Skip Bar | |
|---|---|
| ⏮ | Returns to the beginning of the song that is being played.<br>Otherwise, the previous track is selected.<br>If you press this bar during the first song, the last song is selected. |
| ⏭ | The next song is selected. If you press this bar during the last song, the first song is selected. |

**Fast Forwarding and Rewinding**
To fast forward, press and hold the ▶▶I side of the SKIP bar or ▶ side of the TUNE bar. To rewind, press and hold the I◀◀ side of the SKIP bar or ◀ side of the TUNE bar.

**Repeat Playback**

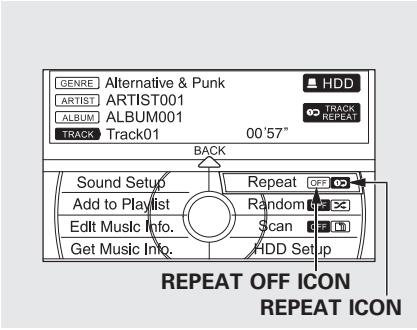


To replay the current track continuously, push the interface selector down during track playback.

Turn the interface dial to select Repeat on the HDD AUDIO MENU, and press ENTER on the interface selector. Turn the interface dial to select the repeat icon, then press ENTER on the interface selector.

To turn this feature off, turn the interface dial to select the OFF icon, then press ENTER on the interface selector.



*CONTINUED*

## Random Playback

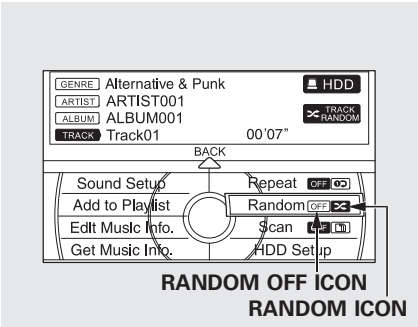


This function plays the tracks on the HDD in random order. To activate random play, push the interface selector down during track playback. Turn the interface dial to select Random on the HDD AUDIO MENU. Press ENTER on the interface selector.

Turn the interface dial to select the track random icon, and press ENTER on the interface selector.

To turn this feature off, turn the interface dial to select the OFF icon, then press ENTER on the interface selector.

## Scan Playback

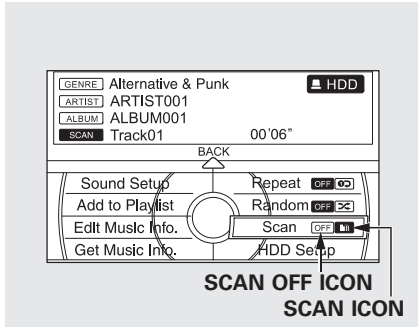


This function samples all the tracks on the HDD in the order that they were recorded.

To activate scan, press the SCAN side of the SCAN/TITLE bar, or push the interface selector down during track playback. Turn the interface dial to select Scan on the HDD AUDIO MENU, and press ENTER on the interface selector.

Turn the interface dial to select the scan icon. Press ENTER on the interface selector. You will hear a 10-second sampling of each track on the HDD.

To turn this feature off, press the SCAN side of the SCAN/TITLE bar again, or turn the interface dial to select the OFF icon. Press ENTER on the interface selector to play the last track sampled.

**Searching the Music**

While playing music in the HDD playback screen, push the interface selector up to select MUSIC SEARCH. You can search a track by Albums, Artists, Tracks, Playlists, Genres, or Ripped Date, or you can shuffle all tracks.

The voice command operable music search feature Song By Voice™ is also available. Refer to the navigation system manual for complete details.

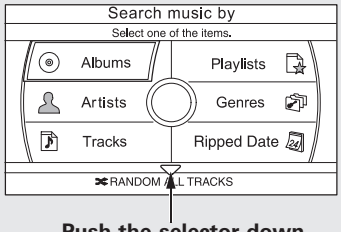


**Push the selector down.**

**RANDOM ALL TRACKS**

Shuffles the playback of all tracks that have been recorded on HDD.

To shuffle all tracks, push the interface selector up to display the Search music by screen, and then push the interface selector down. Shuffled playback begins.

*CONTINUED*

## Searching Music by Albums

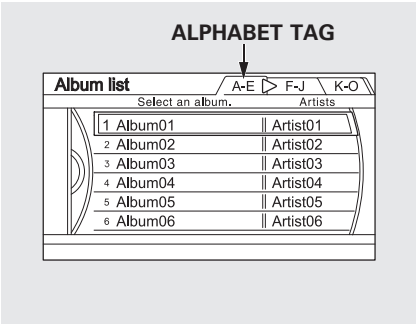


Push the interface selector up to display the Search music by screen, and turn the interface dial to select Albums. Press ENTER on the selector, and the album list will be displayed in alphabetical order.

If you push the interface selector right or left, you can change the alphabet tag.

Turn the interface dial to select the album you want to listen to, then press ENTER on the selector.

The first track on the selected album begins to play.

## Searching Music by Artists

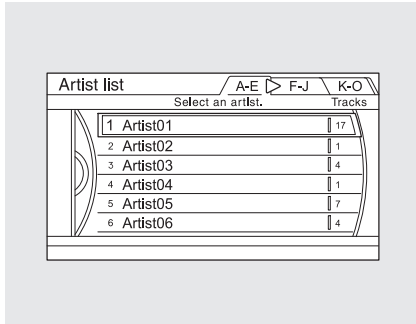


Push the interface selector up to display the Search music by screen, and turn the interface dial to select Artists. Press ENTER on the interface selector, and the artist list will be displayed in alphabetical order.

Turn the interface dial to select the artist you want to listen to, and press ENTER on the interface selector.

If you push the interface selector right or left, you can change the alphabet tag.

The first track on the selected artist begins to play.

## Searching Music by Tracks

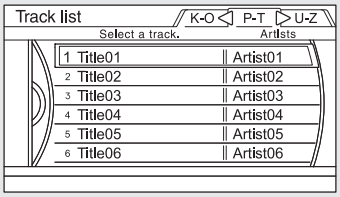


Push the interface selector up to display the Search music by screen, and turn the interface dial to select Tracks. Press ENTER on the interface selector, and the track list will be displayed in alphabetical order.

Turn the interface dial to select a track you want to listen to, then press ENTER on the interface selector.

If you push the interface selector right or left, you can change the alphabet tag.

The selected track begins to play.



*CONTINUED*

## Searching Music by Playlists

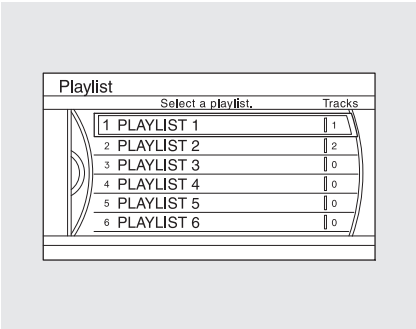


Push the interface selector up to display the Search music by screen, and turn the interface dial to select Playlists. Press ENTER on the interface selector then the playlist will be displayed.

Turn the interface dial to select the playlist you want to listen to, then press ENTER on the interface selector.

The first track on the selected playlist begins to play.

## Searching Music by Genres

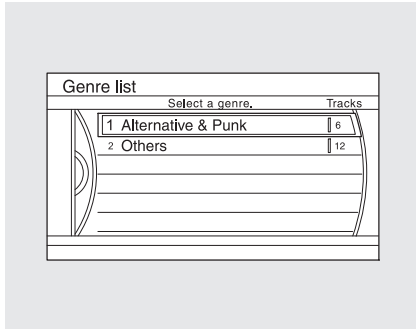


Push the interface selector up to display the Search music by screen, and turn the interface dial to select Genres. Press ENTER on the interface selector, and the genre list will be displayed.

Turn the interface dial to select the genre you want to listen to, and then press ENTER on the interface selector.

The first track on the selected genre begins to play.

## Searching Music by Ripped Date

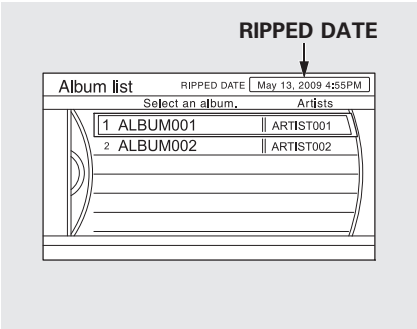


Push the interface selector up to display the Search music by screen, and turn the interface dial to select Ripped Date. Press ENTER on the interface selector. The album list will be displayed.

Turn the interface dial to select the album you want to listen to, then press ENTER on the selector.

The first track on the selected album begins to play.

## Customizing Original/User Playlist

The HDD has two types of the playlists: original playlist and user playlist. On the original playlist, the music CD is recorded automatically when it is played. In addition, you can create up to six user playlists on the HDD. In each playlist, you can store a desired music data from the original playlists or music CDs.

After storing the data, you can change some items: order of tracks on the user playlist, name of the playlist, track title, artist name, and music genre. You can also add a track to the playlist, and delete the track or the album from the playlist.

*CONTINUED*

## Changing the Order of Tracks Within the User Playlist

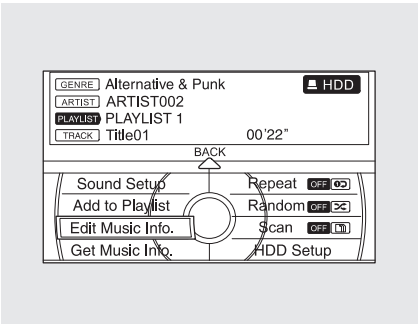


1. On the HDD audio screen, push up the interface selector to select MUSIC SEARCH. Select Playlist by turning the interface dial, then press ENTER.

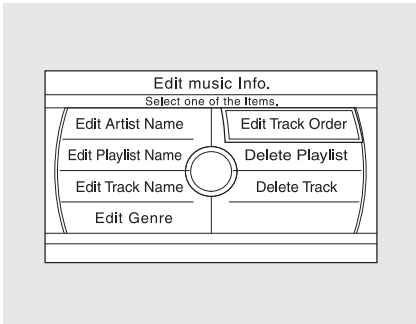


2. Turn the interface dial to select the playlist, then press ENTER.
3. Push the interface selector down to display the AUDIO MENU for the playlist.
4. Turn the interface dial and select Edit Music Info., then press ENTER on the interface selector.
5. Turn the interface dial to select Edit Track Order, then press ENTER on the interface selector.
6. Turn the interface dial to select the track to be moved, then press ENTER on the interface selector.

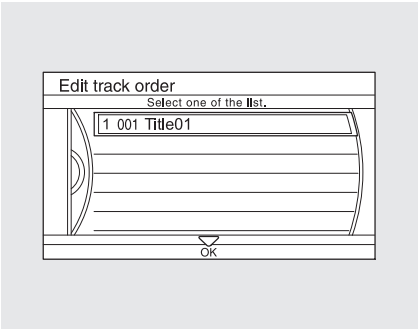


7. Turn the interface dial to select where the track is to be moved, then press ENTER on the interface selector.
8. Push the interface selector down to return to the Playback screen of the User Playlist.

## Changing the Name of the Original Playlist or User Playlist

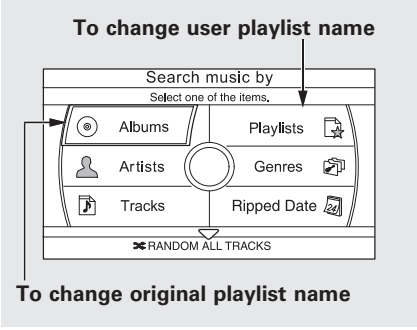


1. Select a desired playlist to change the user playlist name, or a desired album to change the original playlist name (album name). Refer to the Music Search function on page 321 for how to select a playlist or an album. Push the interface selector down to display AUDIO MENU for a selected playlist or album.
2. Turn the interface dial and select Edit Music Info., then press ENTER on the interface selector.
3. Turn the interface dial to select Edit Playlist Name (or Edit Album Name to edit Original Playlist), then press ENTER on the interface selector.
4. On the Select an album screen, turn the interface dial to select Edit Album, then press ENTER on the interface selector.



*CONTINUED*

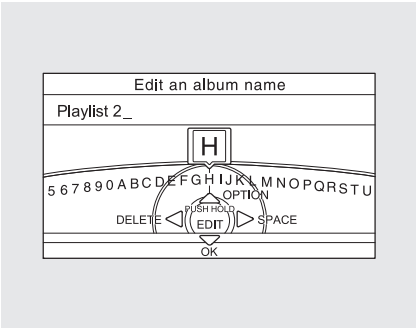


5. On the Edit an album name screen, input the new Original Playlist name or User Playlist name.

   Select a letter by turning the interface dial, then press ENTER.

6. After inputting the name, push the interface selector down to select OK.

7. You will be returned to the Edit music Info. screen for the Original Playlist or User Playlist.

8. Push the CANCEL button or the AUDIO button. The screen returns to the playlist.

## Changing the Track Titles

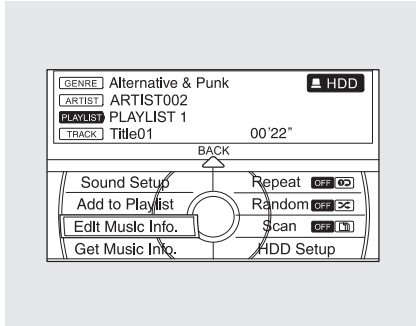


1. Select a desired Original Playlist, then turn the interface dial to select the track of which you want to change the name. Refer to the Music Search function on page 321 for how to select a playlist. Push the interface selector down to display AUDIO MENU for a selected track.

2. Turn the interface dial and select Edit Music Info., then press ENTER on the interface selector.

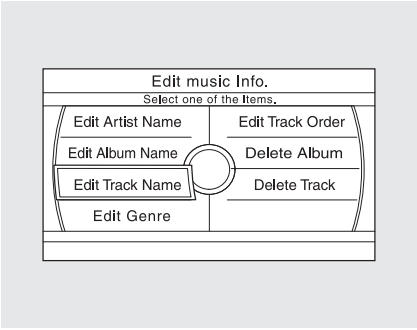


3. The Edit music Info. is displayed. Select Edit Track Name, then press ENTER on the interface selector.
4. Input the new track name on the Edit a track name screen.
5. After inputting the name, push the selector down to select OK.
6. You will be returned to the Edit music Info. screen of the Original Playlist.
7. Push the CANCEL button or the AUDIO button. The screen returns to the playlist.



*CONTINUED*

### Changing the Artist Name of the Original Playlist

1. Select a desired playlist to change the user playlist artist name or a desired album to change the original playlist artist name. Refer to the Music Search function on page 321 for how to select a playlist or an album. Push the interface selector down to display AUDIO MENU for a selected playlist or album.
2. Turn the interface dial and select Edit Music Info., then press ENTER on the interface selector.
3. Turn the interface dial to select Edit Artist Name, then press ENTER on the interface selector in Edit an artist name screen.

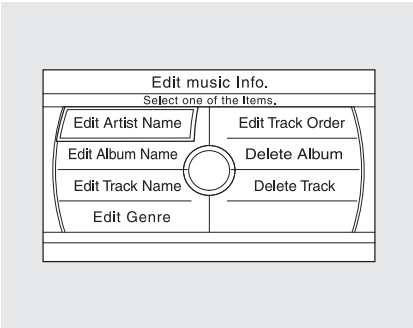


4. On the Edit an artist name screen input the new artist name.
5. After inputting the name, push the interface selector down to select OK.

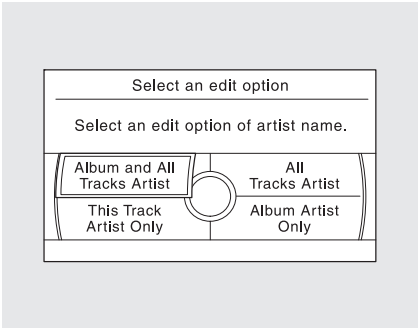


6. The Select an edit option screen is displayed. Choose if you would like to apply the new name to both the album artist and/or the track artist. Select edit option by turning the dial, then press ENTER.
7. You will be returned to the Edit music Info. screen.
8. Push the CANCEL button or the AUDIO button. The screen returns to the playlist.

**Changing the Musical Genre**

1. Select a desired playlist to change the user playlist music genre, or a desired album to change the original playlist music genre. Refer to the Music Search function on page 321 for how to select a playlist or an album. Push the interface selector down to display AUDIO MENU for a selected playlist or album.

2. Turn the interface dial and select Edit Music Info., then press ENTER on the interface selector.
3. Turn the interface dial to select Edit Genre, then press ENTER on the interface selector in Select a genre screen.
4. On the Select a genre screen, turn the interface dial and select genre, and then press ENTER on the interface selector.
5. Turn the interface dial on the Select a genre screen to select the Original Playlist that you want to change the genre and then press ENTER on the interface selector. You will be returned to the Edit music Info. screen.
6. Push the CANCEL button or the AUDIO button. The screen returns to the playlist.



*CONTINUED*

### Deleting a Track

1. Select the track with the interface dial from the playback screen while it is playing. Push the interface selector down to display AUDIO MENU.
2. Turn the interface dial and select Edit Music Info. then press ENTER on the interface selector.

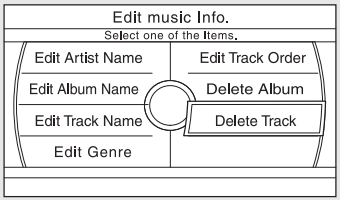


3. The Edit music Info. is displayed. Select Delete Track and press ENTER on the interface selector.
4. Select OK to confirm you want to delete the track. You will be returned to the Playback screen for the Original Playlist or User Playlist.

**NOTE:**

- When you delete a track from the Original Playlist, the track is also deleted from the User Playlist in which the deleted track was stored.
- Even if all the tracks are deleted from the User Playlist, the data folder for that playlist cannot be deleted, and their names (playlist and artist) are left. You can store tracks again on that playlist.

**Deleting an Album or Playlist**

1. On the HDD playback screen of the album in which you want to delete, push the interface selector down to display AUDIO MENU.
2. Turn the interface dial and select Edit Music Info., then press ENTER on the interface selector.
3. On the Edit music Info. screen, turn the interface dial and select Delete Album (or Delete Playlist), then press ENTER on the interface selector.
4. The Confirmation is displayed. Select OK and then press ENTER on the interface selector. You will be returned to the Playback screen for the Original Playlist or User Playlist.

**NOTE:**

- When you delete the Original Playlist, any tracks stored in a User Playlist are also deleted.
- Even if all the tracks are deleted from the User Playlist, the data folder for that playlist cannot be deleted, and their names (playlist and artist) are left. You can store tracks again on that playlist.

**Adding a Track to the User Playlist**

1. While playing back an Original Playlist or User Playlist that you want to add to a different User Playlist, push the interface selector down to display AUDIO MENU.



*CONTINUED*

2. Turn the interface dial and select Add to Playlist, and then press ENTER on the interface selector.
3. On the Playlist screen, turn the interface dial and select a desired User Playlist, then press ENTER on the interface selector. You will be returned to the Playback screen for the Original Playlist or User Playlist.

**NOTE:**

When adding from and to the same User Playlist, the same tracks will be stored twice.

### Acquiring Title Information

1. Push the interface selector down to display AUDIO MENU.
2. Turn the interface dial and select Get Music Info., then press ENTER on the interface selector.
3. On the Select an Album screen, turn the interface dial and select the title information for the Original Playlist, then press ENTER on the interface selector. You will be returned to the Audio Menu screen.

## Checking HDD Audio Capacity

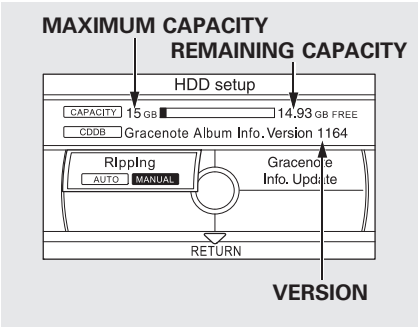


You can check the HDD Audio capacity and remaining space as well as the Gracenote Music Recognition Service (CDDB) version included with the navigation system on the HDD Setup screen.

## Updating Gracenote® Album Info (Gracenote® Media Database)

You can update the Gracenote® Album Info (Gracenote® Media Database) that is included with the navigation system.

**NOTE:**

Consult your dealer, or visit *www.acura.com* (in U.S.), or *www.acura.ca* (in Canada), to acquire updated files.

1. Insert the update disc into the disc slot, or connect the USB flash memory device that includes the update.

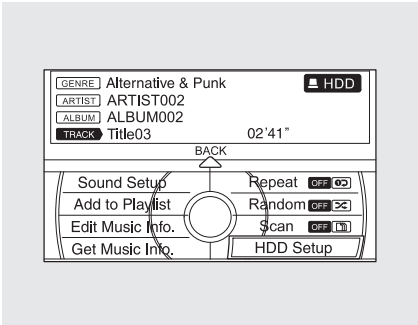


2. Push the interface selector down to select AUDIO MENU in the HDD playback screen or CD playback screen.
3. Turn the interface dial to select HDD Setup, then press ENTER on the interface selector.
4. Turn the interface dial and select Gracenote Info. Update, then press ENTER on the interface selector.

*CONTINUED*

5. Turn the dial to select USB or Disc on the Update Gracenote by screen, then press ENTER on the selector.
6. Turn the dial to select Yes on the confirmation screen, and the update will start.
7. Turn the interface dial to select OK on the confirmation screen.
8. After updating is complete, press ENTER on the confirmation screen.

**NOTE:**
Once you perform an update any information you edited before will be overwritten.

***Clearing the HDD***
Any music, data, calendar entries, etc. that have been stored on the HDD can be deleted.

1. Press the INFO/PHONE button, rotate the interface dial to select **Setup,** and press ENTER.
2. Move the interface selector to the right to navigate to the **Setup (Other)** screen.
3. On the **Setup (Other)** tab, rotate the interface dial to select **Clear Personal Data,** and press ENTER.
4. Select the item(s) you wish to delete.

   The trash icon appears next to the selected item(s).
5. When you are finished selecting the item(s), press the interface selector down to select OK.
6. A pop-up screen verifying whether the deletion is to be continued or not will be displayed. Select Yes to delete, or No to cancel.
7. A second confirmation will appear. Select Yes to delete, or No to cancel.
8. When you are finished deleting the data, press the interface selector down to select **OK**.

**NOTE:** If you select **Music on HDD,** the system will automatically restart after deletion.

**Gracenote Music Recognition Service (CDDB)**

Music recognition technology and related data are provided by Gracenote®. Gracenote is the industry standard in music recognition technology and related content delivery. For more information, please visit http://www.gracenote.com/.

When music is recorded to the HDD from a CD, information such as the recording artist and track name are retrieved from the Gracenote Database and displayed (when available). Gracenote may not contain information for all albums.

Gracenote is an internet-based music recognition service that allows artist, album, and track information from CDs to display on the HDD. Gracenote users are allowed 4 free updates a year. More information about Gracenote, its features, and downloads are available at *www.acura.com* (in U.S.) or *www.acura.ca* (in Canada).

CD and music-related data from Gracenote, Inc., copyright© 2000 – 2009 Gracenote.

Gracenote Software, copyright© 2000 – 2009 Gracenote. This product and service may practice one or more of the following U.S. Patents: # 5,987,525; # 6,061,680; # 6,154,773, # 6,161,132, # 6,230,192, # 6,230,207, # 6,240,459, # 6,330,593, and other patents issued or pending. Some services supplied under license from Open Globe, Inc. for U.S. Patent: # 6,304,523.

Gracenote and CDDB are registered trademarks of Gracenote. The Gracenote logo and logotype, and the "Powered by Gracenote" logo are trademarks of Gracenote.



*CONTINUED*

## Gracenote® End User License Agreement

Version 20061005

This application or device contains software from Gracenote, Inc. of Emeryville, California (“Gracenote”). The software from Gracenote (the “Gracenote Software”) enables this application to perform disc and/or file identification and obtain music-related information, including name, artist, track, and title information (“Gracenote Data”) from online servers or embedded databases (collectively, “Gracenote Servers”) and to perform other functions. You may use Gracenote Data only by means of the intended End-User functions or this application or device.
You agree that you will use Gracenote Data, the Gracenote Software, and Gracenote Servers for your own personal non-commercial use only.

You agree not to assign, copy, transfer or transmit the Gracenote Software or any Gracenote Data to any third party.

YOU AGREE NOT TO USE OR EXPLOIT GRACENOTE DATA, THE GRACENOTE SOFTWARE, OR GRACENOTE SERVERS, EXCEPT AS EXPRESSLY PERMITTED HEREIN.

You agree that your non-exclusive license to use the Gracenote Data, the Gracenote Software, and Gracenote Servers will terminate if you violate these restrictions. If your license terminates, you agree to cease any and all use of the Gracenote Data, the Gracenote Software, and Gracenote Servers.

Gracenote reserves all rights in Gracenote Data, the Gracenote Software, and the Gracenote Servers, including all ownership rights. Under no circumstances will Gracenote become liable for any payment to you for any information that you provide. You agree that Gracenote, Inc. may enforce its rights under this Agreement against you directly in its own name.

The Gracenote service uses a unique identifier to track queries for statistical purposes. The purpose of a randomly assigned numeric identifier is to allow the Gracenote service to count queries without knowing anything about who you are. For more information, see the web page for the Gracenote Privacy Policy for the Gracenote service.

The Gracenote Software and each item of Gracenote Data are licensed to you “AS IS.”

Gracenote makes no representations or warranties, express or implied, regarding the accuracy of any Gracenote Data from in the Gracenote Servers. Gracenote reserves the right to delete data from the Gracenote Servers or to change data categories for any cause that Gracenote deems sufficient. No warranty is made that the Gracenote Software or Gracenote Servers are error-free or that functioning of Gracenote Software or Gracenote Servers will be uninterrupted.

Gracenote is not obligated to provide you with new enhanced or additional data types or categories that Gracenote may provide in the future and is free to discontinue its services at any time.

GRACENOTE DISCLAIMS ALL WARRANTIES EXPRESS OR IMPLIED, INCLUDING, BUT NOT LIMITED TO, IMPLIED WARRANTIES OF MERCHANTABILITY, FITNESS FOR A PARTICULAR PURPOSE, TITLE, AND NON-INFRINGEMENT. GRACENOTE DOES NOT WARRANT THE RESULTS THAT WILL BE OBTAINED BY YOUR USE OF THE GRACENOTE SOFTWARE OR ANY GRACENOTE SERVER. IN NO CASE WILL GRACENOTE BE LIABLE FOR ANY CONSEQUENTIAL OR INCIDENTAL DAMAGES OR FOR ANY LOST PROFITS OR LOST REVENUES.

© Gracenote 2009

# Playing an iPod® (Models with navigation system)

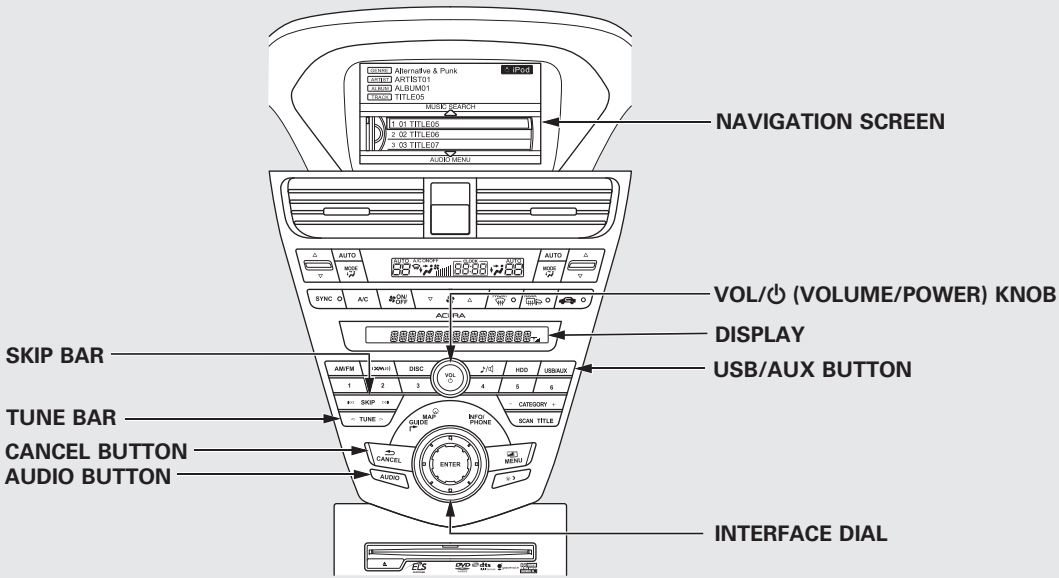

**To Play an iPod®**

This audio system can select and play the audio files on the iPod® with the same controls used for the in-dash disc player. To play an iPod, connect it to the USB adapter cable in the console compartment by using your dock connector, then press the USB/AUX button. The power mode must be ACCESSORY or ON. The iPod will also be charged with the power mode in these settings.

Your vehicle has the engine start/stop button instead of an ignition switch. For more information on how to select the power mode, see page 194.

The system will only play songs stored on the iPod with iTunes.

iPod and iTunes are registered trademarks owned by Apple Inc.

***Voice Control System***

You can select the AUX mode by using the navigation system voice control buttons, but cannot operate the play mode functions.

The voice command operable music search feature Song By Voice™ is also available. Refer to the navigation system manual for complete details.

iPods compatible with your audio system using the USB adapter cable are:

| Model | Software |
|---|---|
| iPod 5th and 6th generations | Ver. 1.3 or more |
| iPod classic | Ver. 1.1.2 or more |
| iPod nano 1st generation | Ver. 1.3.1 or more |
| iPod nano 2nd generation | Ver. 1.1.2 or more |
| iPod nano 3rd generation | Ver. 1.1.3 or more |
| iPod nano 4th generation | Ver.1.0.3 or more |
| iPod touch 1st generation | Ver. 1.1.1 or more |
| iPod touch 2nd generation | Ver. 2.2.1 or more |
| iPhone | Ver. 2.1.0 or more |
| iPhone 3G | Ver.2.1.0 or more |

*CONTINUED*

Use only compatible iPods with the latest software. iPods that are not compatible will not work in this audio unit.

**NOTE:**

- Do not connect your iPod using a hub.
- Do not keep the iPod and dock connector cable in the vehicle. Direct sunlight and high heat will damage it.
- Do not use an extension cable between the USB adapter cable equipped with your vehicle and your dock connector.
- We recommend backing up your data before playing it.
- Some devices cannot be powered or charged via the USB adapter. If this is the case, use the accessory adapter to supply power to your device.

In AAC format, DRM (digital rights management) files cannot be played. If the system finds a DRM file, the audio unit displays UNPLAYABLE, and then skips to the next file.

***Connecting an iPod***

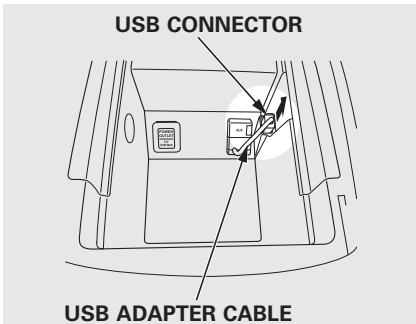


1. Unclip the USB connector by pulling it up, and pull out the USB adapter cable in the console compartment.

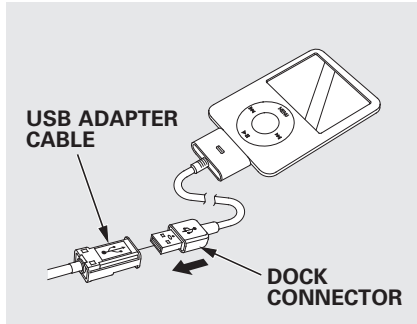


2. Connect your dock connector to the iPod correctly and securely.
3. Install the dock connector to the USB adapter cable securely.

If the iPod indicator does not appear in the audio display, check the connections, and try to reconnect the iPod a few times.

If the audio system still does not recognize the iPod, the iPod may need to be reset. Follow the instructions that came with your iPod, or you can find reset instructions online at *www.apple.com/ipod*.

The current file number and total of the selected playable files are displayed in the display. Pressing the AUDIO button displays the artist, album and track (file) names on the navigation screen.

***To Change or Select Files***

Use the SKIP bar while an iPod is playing to select passages and change files.

**SKIP** – Each time you press and release the ►►I side of the SKIP bar, the system skips forward to the beginning of the next track. Press and release the I◄◄ side of the bar to skip backward to the beginning of the current track. Press it again to skip to the beginning of the previous track.

To move rapidly within playing track, press and hold either side (►►I or I◄◄/► or ◄) of the SKIP bar or the TUNE bar.

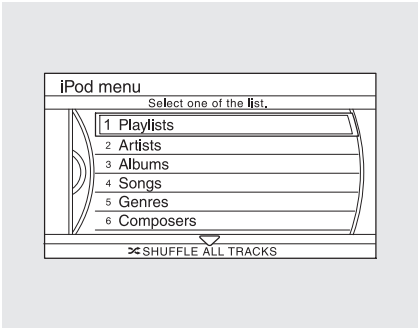


You can also select a track from any category on the list: Playlists, Artists, Albums, Songs, Genres and Composers, by using the interface dial.

Push the interface selector up to display the iPod menu screen. Turn the interface dial to select a desired search method.

*CONTINUED*

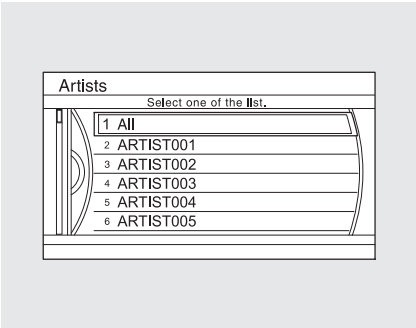


Press ENTER on the interface selector to display the items on that list, then turn the interface dial to make a selection. Press ENTER to set your selection.

If you select “ALL” on the artists list, the albums list is displayed.

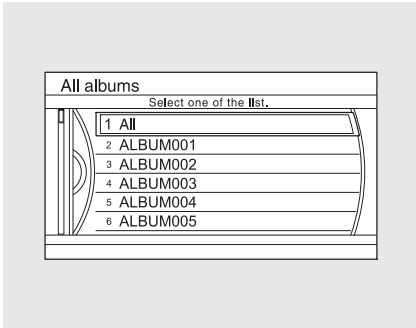


If you select “ALL” on the albums list, all the tracks become available for selection.

The track order that appears at this time varies depending on the iPod model and software.

Press the AUDIO button to go back to the normal audio playing display. Pressing the CANCEL button goes back to the previous screen, and pressing the MAP button cancels the audio control display on the screen.

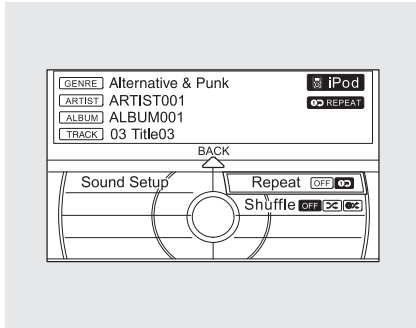


**REPEAT** – This feature continuously plays a file.

1. Press the AUDIO button to display the audio control screen, then push the interface selector down to display AUDIO MENU.
2. Turn the interface dial, select Repeat, and press ENTER on the interface selector.

3. Turn the interface dial, select the Repeat icon and press ENTER on the interface selector. Playback of the track that is currently being played will be repeated.

To cancel this function, turn the interface dial and select the Repeat OFF icon, and then press ENTER on the interface selector.

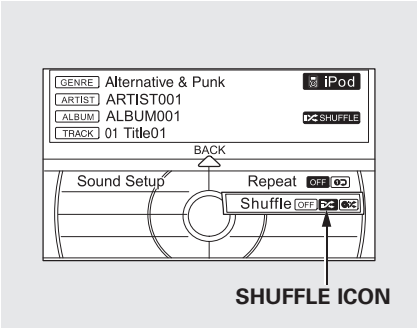


**SHUFFLE** – This feature shuffles playback of tracks contained within the iPod. This function can be established at the same time that Repeat Playback is set up.

1. On the audio control screen, push the interface selector down to display AUDIO MENU.
2. Turn the interface dial, select Shuffle and press ENTER on the interface selector.
3. Turn the interface dial, select the Shuffle icon and press ENTER on the interface selector.

Shuffle playback will begin. To cancel this function, turn the interface dial and select the Shuffle OFF icon, and then press ENTER on the interface selector.



*CONTINUED*

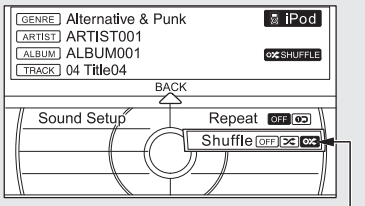


ALBUM SHUFFLE ICON

**ALBUM SHUFFLE** – Shuffles playback of all available albums, which are selected by the desired list: playlists, artists, albums or songs. This function can be selected at the same time that Repeat Playback is setup.

1. On the audio control screen, push the interface selector down to display AUDIO MENU.
2. Turn the interface dial, select Shuffle and press ENTER on the interface selector.
3. Turn the interface dial, select the Album Shuffle icon and press ENTER on the interface selector. Shuffle playback of the album will begin.

To cancel this function, turn the interface dial and select the Shuffle OFF icon, and then press ENTER on the interface selector.

**NOTE:**
Available operating functions vary on models or versions. Some functions may not be available on the vehicle's audio system.

**To Stop Playing Your iPod**
To play the radio, press the AM/FM, or (( XM )) button. Press the DISC button to switch to the disc mode. Press the USB/AUX button to switch the audio mode between the *Bluetooth*® Audio and iPod.

***Disconnecting an iPod***

You can disconnect the iPod at any time when you see the "OK to disconnect" message* in the iPod display. Always make sure you see the "OK to disconnect" message in the iPod display before you disconnect it. Make sure to follow the iPod's instructions on how to disconnect the dock connector from the USB adapter cable.

* : The displayed message may vary on models or versions. On some models, there is no message to disconnect.

When you disconnect the iPod while it is playing, the display shows USB NO DATA, and the audio screen (if selected) shows NO DATA.

If you reconnect the same iPod, the system may begin playing where it left off, depending on what mode the iPod is in when it is reconnected.

**NOTICE**

*When you connect your iPod to the navigation system, the most recent settings (Shuf f le, Repeat, etc.) will be carried over.*

**iPod Error Messages**

If you see an error message in the display, see page 348.

# iPod® Error Messages (Models with navigation system)

If you see an error message in the display while playing an iPod, find the solution in the chart to the right. If you cannot clear the error message, take your vehicle to your dealer.

| Error Message | Solution |
|---|---|
| UNSUPPORTED | Appears when an unsupported iPod is inserted. |
| CONNECT RETRY | Appears when the iPod cannot be authenticated. |
| NO SONG | Appears when there are no files in the iPod. |

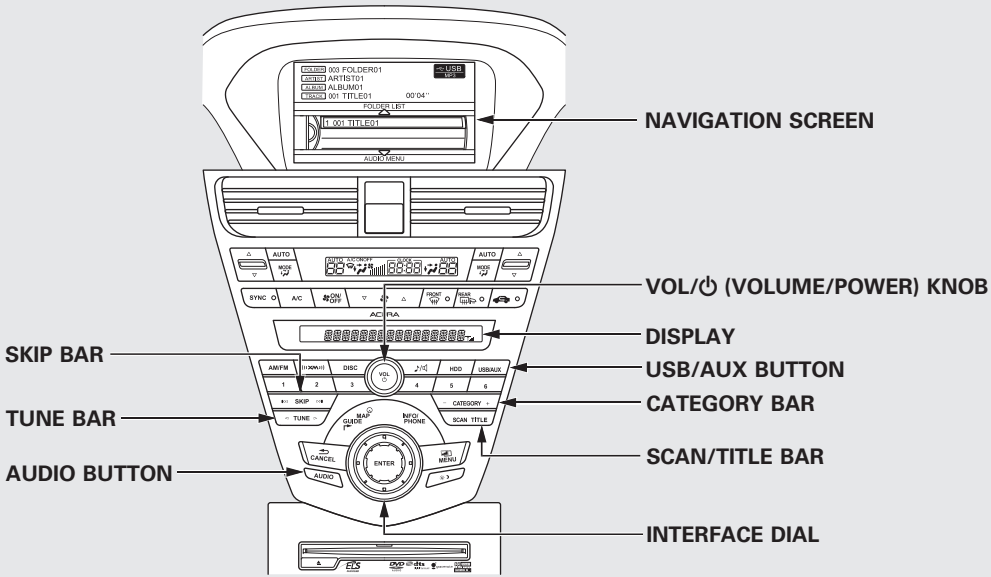
NAVIGATION SCREEN
VOL/⏻ (VOLUME/POWER) KNOB
DISPLAY
USB/AUX BUTTON
CATEGORY BAR
SCAN/TITLE BAR
INTERFACE DIAL
SKIP BAR
TUNE BAR
AUDIO BUTTON

*CONTINUED*

**To Play a USB Flash Memory Device**

This audio system can select and play the audio files on a USB flash memory device with the same controls used for the disc player. To play a USB flash memory device, connect it to the USB adapter cable in the console compartment, then press the USB/AUX button until you see “USB” in the display. The power mode must be ACCESSORY or ON.

Your vehicle has the engine start/stop button instead of an ignition switch. For more information to select the power mode, see page 194.

The audio system reads and plays the audio files on the USB flash memory device in MP3, WMA or AAC* formats. The USB flash memory device limit is up to 500 folders or up to 15000 files.

* : Only AAC format files recorded with iTunes are playable on this audio unit.

The recommended USB flash memory devices are 256 MB or higher, and formatted with the FAT file system. Some digital audio players may be compatible as well.

Some USB flash memory devices (such as devices with security lockout features, etc.) will not work in this audio unit.

**NOTE:**

- Do not use a device such as a card reader or hard drive as it or your files may be damaged.
- Do not connect your USB flash memory device using a hub.
- Do not use an extension cable to the USB adapter cable equipped with your vehicle.
- Do not keep a USB flash memory device in the vehicle. Direct sunlight and high heat will damage it.
- We recommend backing up your data before playing a USB flash memory device.
- Some devices cannot be powered or charged via the USB adapter, if this is the case use the accessory adapter to supply power to your device.

- Depending on the type and number of files, it may take some time before they begin to play.
- Depending on the software the files were made with, it may not be possible to play some files, or display some text data.
- Depending on the type of encoding and writing software used, there may be cases where character information does not display properly.
- The order of files in USB playback may be different from the order of files displayed in PC or other devices etc. Files are played in the order stored in USB flash memory device.

***Voice Control System***

You can select the AUX mode by using the voice control buttons, but cannot operate the play mode functions.

Even if recorded in MP3, WMA or AAC format, a file with unsupported version cannot be played. If the system finds it, the audio unit displays UNSUPPORTED, and then skips to the next file.

InWMA or AAC format, DRM (digital rights management) files cannot be played. If the system finds a DRM file, the audio unit displays UNPLAYABLE FILE, and then skips to the next file.

**NOTICE**

*Combining a low sampling f requency with a low bitrate may result in extremely degraded sound quality.*

***Connecting a USB Flash Memory Device***

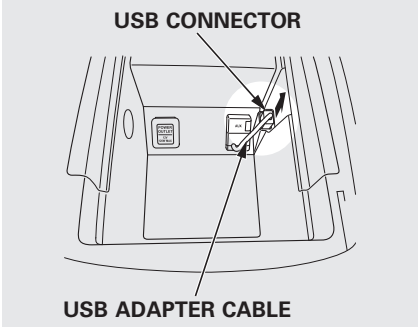


1. Unclip the USB connector by pulling it up, and pull out the USB adapter cable in the console compartment.

*CONTINUED*

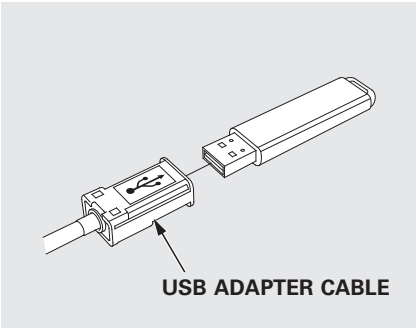


2. Connect the USB flash memory device to the USB adapter cable correctly and securely.

When the USB device is connected and the USB mode is selected on the audio system, the USB indicator is shown in the display. It also shows the folder and file numbers. Pressing the AUDIO button displays the USB indicator, the folder and file names, and the elapsed time in the navigation screen.

***To Change or Select Files***

Use the SKIP bar while a USB flash memory device is playing to select passages and change files.

**SKIP** – Each time you press and release the ►►I side of the skip bar, the system skips forward to the beginning of the next file. Press and release the I◄◄ side of the bar, to skip backward to the beginning of the current file. Press it twice to skip to the beginning of the previous file.

To move rapidly within playing track, press and hold either side (►►I or I◄◄/► or ◄) of the SKIP bar or the TUNE bar.

**Folder Selection** – To select a different folder, press and release either side of the CATEGORY bar. Press the + side to skip to the next folder, and press the – side to skip to the beginning of the previous folder.

### *To Select a File from Folder and File Lists*

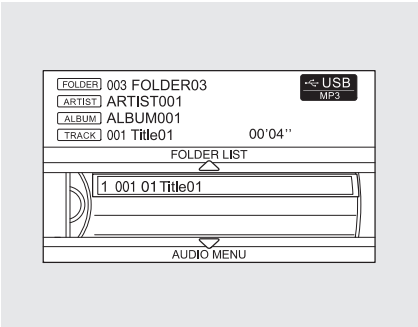


You can also select a folder or file from the list by using the interface dial. Press the AUDIO button to show the audio display on the navigation screen. Use the interface dial to highlight the file, then press ENTER to set your selection.

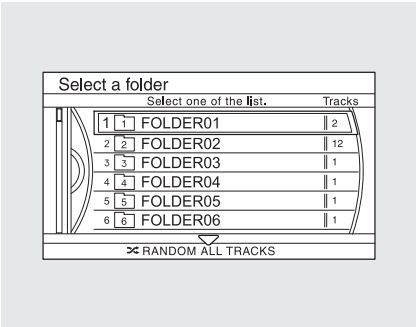


Push the selector up to display the folder list screen, then turn the interface dial to select a folder. Press ENTER to set your selection.

If you have more than one layer of folders (folders within folders), you can also see each folder on the screen.

To go back to the normal play display, press the AUDIO button. Pressing the CANCEL button goes back to the previous screen and pressing the MAP button cancels the audio mode display.

### *To Select Repeat, Random or Scan Mode:*

Push the interface selector down to display the AUDIO MENU.

You can select any type of repeat, random or scan mode on the audio menu screen.

Move the interface selector up to select BACK to show the USB screen, or press the CANCEL button to return to the previous screen.



*CONTINUED*

## TRACK REPEAT

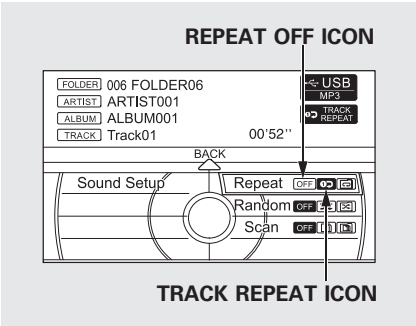


This function repeats playback of the track.

1. On the USB main screen, push the interface selector down to display AUDIO MENU.
2. Turn the interface dial to select Repeat and press ENTER on the interface selector.
3. Turn the interface knob, select the Track Repeat icon and press ENTER on the interface selector. Playback of the track that is currently being played will be repeated.

To cancel this function, turn the interface dial and select the Repeat OFF icon, and then press ENTER on the interface selector.

Pressing either side of the SKIP bar also cancels this function.

## FOLDER REPEAT

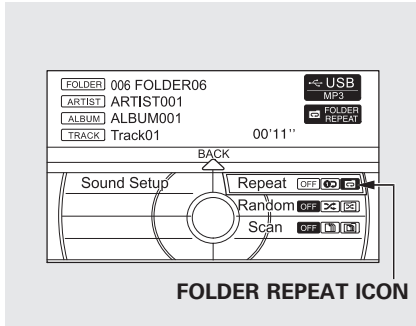


This function replays all the tracks in a folder in the order that they were stored.

1. On the USB main screen, push the interface selector down to display AUDIO MENU.
2. Turn the interface dial to select Repeat and press ENTER on the interface selector.

3. Turn the interface dial, select the Folder Repeat icon and press ENTER on the interface selector. Playback of the folder that is currently being played will be repeated.

To cancel this function, turn the interface dial and select the Repeat OFF icon, and then press ENTER on the interface selector.

## TRACK RANDOM

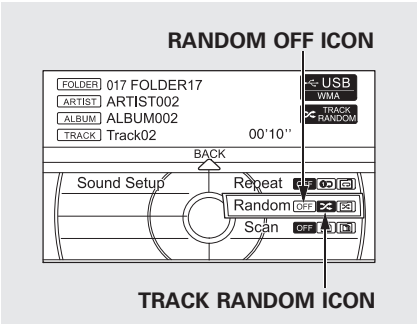


This function plays all the tracks on the USB flash memory device in random order.

1. On the USB main screen, push the interface selector down to display AUDIO MENU.
2. Turn the interface dial, select Random and press ENTER on the interface selector.
3. Turn the interface dial, select the Track Random icon and press ENTER on the interface selector. The tracks are played in random order.

To cancel this function, turn the interface dial and select the Random OFF icon, and then press ENTER on the interface selector.



*CONTINUED*

## FOLDER RANDOM

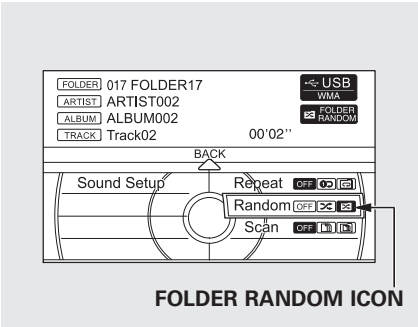


This function plays all of the tracks in the current folder in random order.

1. On the USB main screen, push the interface selector down to display AUDIO MENU.
2. Turn the interface dial, select Random and press ENTER on the interface selector.
3. Turn the interface dial, select the Folder Random icon and press ENTER on the interface selector. The files are played in random order.

To cancel this function, turn the interface dial and select the Random OFF icon, and then press ENTER on the interface selector.

## TRACK SCAN

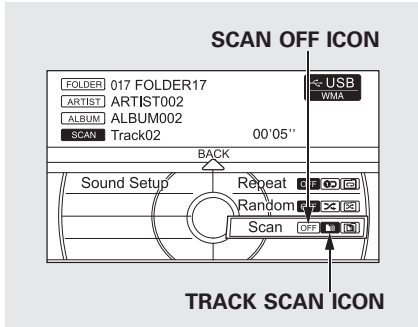


This function samples all the tracks in the current folder in the order that they were recorded.

1. On the USB main screen, press the SCAN side of the SCAN/TITLE bar, or push the interface selector down to display AUDIO MENU. Turn the interface dial, select the Scan icon and press ENTER on the interface selector.

2. Turn the interface dial, select Track Scan icon and press ENTER on the interface selector. Each track or file is sampled for 10 seconds. When all the tracks in the folder have been scanned, regular playback is resumed.

To cancel this function, press the SCAN side of the SCAN/TITLE bar again, or turn the interface dial and select the Scan OFF icon, and then press ENTER on the interface selector to play the last track sampled.

## FOLDER SCAN

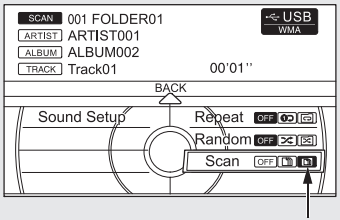


This function samples the first file in each folder within the USB flash memory device.

1. On the USB main screen, press the SCAN side of the SCAN/TITLE bar twice, or push the interface selector down to display AUDIO MENU. Turn the interface dial, select the Scan icon and press ENTER on the interface selector.
2. Turn the interface dial, select Folder Scan icon and press ENTER on the interface selector.

The first file of the first folder is sampled for 10 seconds. If no other operations are carried out, the first files of the remaining folders are played for 10 seconds. After the first file of the last folder is played back, regular playback is resumed.

To cancel this function, press the SCAN side of the SCAN/TITLE bar twice again, or turn the interface dial and select the Scan OFF icon, and then press ENTER on the interface selector.

*CONTINUED*

### To Stop Playing a USB Flash Memory Device

To play the radio, press the AM/FM, or (( XM )) button. Press the DISC button to switch to the disc mode. Press the USB/AUX button to switch the mode between the USB and *Bluetooth®* Audio.

If you reconnect the same USB flash memory device, the system will begin playing where it left off.

### *Disconnecting a USB Flash Memory Device*

You can disconnect the USB flash memory device at any time even if the USB mode is selected on the audio system. Always follow the USB flash memory device's instructions when you remove it.

When you disconnect the USB flash memory device while it is playing, the display shows USB NO DATA, and the audio screen (if selected) shows NO DATA.

### USB Flash Memory Device Error Messages

If you see an error message in the display, see page 359.

# USB Flash Memory Device Error Messages (Models with navigation system)

If you see an error message in the display while playing a USB flash memory device, find the solution in the chart to the right. If you cannot clear the error message, take your vehicle to your dealer.

| Error Message | Solution |
|---|---|
| FILE ERROR | The system cannot read the file(s). Check the files in the USB flash memory device. There is a possibility that the files have been damaged. |
| UNSUPPORTED | Appears when an unsupported USB flash memory device is inserted. |
| UNPLAYABLE FILE | Appears when the file is copyright protected, such as DRM. |
| NO SONG | Appears when there are no playable files in the USB flash memory device. |
| BAD USB DEVICE PLEASE CHECK OWNER'S MANUAL | USB flash memory device is drawing too much current. Check owner's manual for compatible USB devices. |
| ERROR | Internal USB ROM Error. Try a different USB device. |

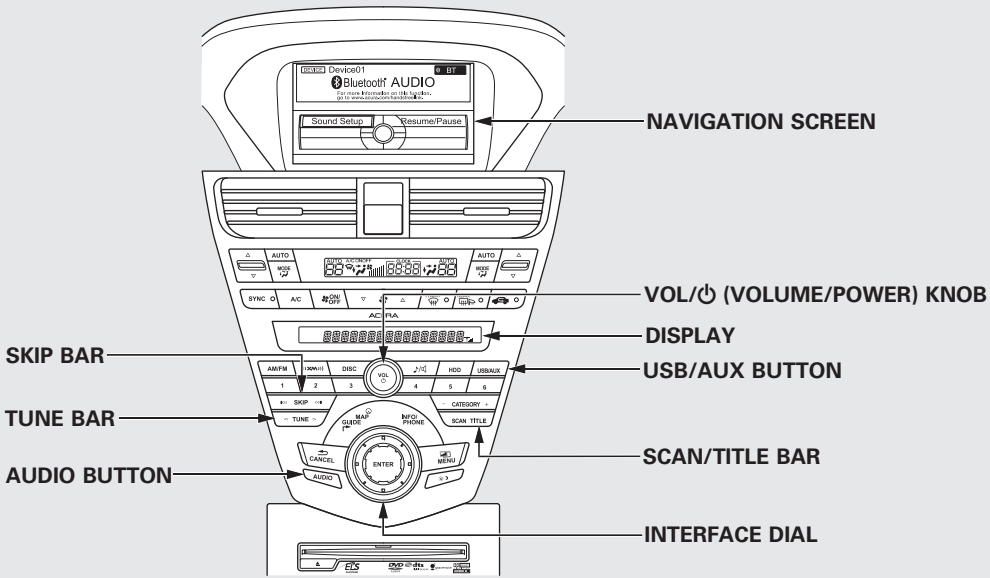
NAVIGATION SCREEN
VOL/⏻ (VOLUME/POWER) KNOB
DISPLAY
USB/AUX BUTTON
SCAN/TITLE BAR
INTERFACE DIAL
SKIP BAR
TUNE BAR
AUDIO BUTTON
Device01
BT
Bluetooth AUDIO
Sound Setup
Resume/Pause
AUTO
MODE
SYNC
A/C
ON/OFF
AM/FM
DISC
VOL
HDD
USB/AUX
SKIP
TUNE
CATEGORY
SCAN
TITLE
MAP
GUIDE
INFO/PHONE
CANCEL
ENTER
MENU
AUDIO

Your vehicle is equipped with a *Bluetooth*® audio system, which allows you to listen to streaming audio from your Bluetooth audio compatible phone. This function is only available on Bluetooth Audio Compatible phones that are paired and linked to the vehicle's *Bluetooth*® HandsFreeLink® (HFL) system (see page 416).

Not all Bluetooth-enabled phones with streaming audio capabilities are compatible with the system. You can find an approved phone by visiting *www.acura.com/handsfreelink,* or by calling the HandsFreeLink® consumer support at 1-888-528-7876. In Canada, visit *www.acura.ca,* or call 1-888-9-ACURA-9.

**NOTE:** In some states it may be illegal to perform some data device functions while driving.

## To Play *Bluetooth*® Audio Files

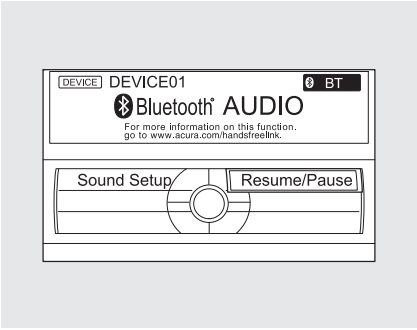


Make sure that your phone is paired and linked to the HFL.

To begin to play the audio files, you may need to operate your phone. If so, follow the phone maker's operating instructions.

Press the USB/AUX button* with the power mode in ACCESSORY or ON. When the phone is recognized, you will see the *Bluetooth*® Audio message and icon on the display and the audio control display on the navigation screen (if selected), and the system begins to play.

Your vehicle has the engine start/stop button instead of an ignition switch. For more information to select the power mode, see page 194.

*: If an iPod or USB flash memory device or audio unit connected to the auxiliary input jack was selected at the last mode, you will see iPod, USB or AUX in the display and the audio control display on the navigation screen (if selected). Push the USB/AUX button again to play audio files from your *Bluetooth*® Audio phone.

*CONTINUED*

Once a device is linked, the name of the device will appear on the screen. Pressing the TITLE side of the SCAN/TITLE bar switches the display between the *Bluetooth*® Audio and the device name.

If more than one phone is paired to the HFL system, there will be delay before the system begins to play.

In the following conditions, the display shows "NO CONNECT" message after pressing the TITLE side of the SCAN/TITLE bar.

- The phone is not linked to HFL.
- The phone is not turned on.
- The phone is not in the vehicle.
- Another HFL compatible phone, which is not compatible for *Bluetooth*® Audio, is already connected.

If your *Bluetooth*® Audio compatible phone does not operate as described, make sure it is an Acura approved phone. To find out if your phone is approved, go to *www.acura.com/handsfreelink* (in Canada, *www.acura.ca*), or call the HandsFreeLink® consumer support at 1-888-528-7876.

***Voice Control System***

You can select the AUX mode by using the voice control buttons, but cannot operate the play mode functions.

***To skip a file***

Press the ►►I side of the SKIP bar to skip forward to the next file, and press the I◄◄ side to skip backward to the beginning of the current file. Push the I◄◄ side again to skip to the previous file.

The skip function may not be available on some devices.

### *To pause or resume a file*

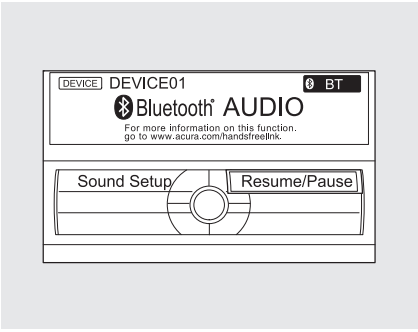


The resume/pause mode can stop playing a file temporarily.

Turn the interface dial to switch the setting between the resume/pause mode and the sound setup mode. Select Resume/Pause, then press ENTER to set your selection. Each time you press ENTER, the system switches between the resume mode and pause mode.

**NOTE:** The pause function may not be available on some phone devices.

### *To change sound settings*

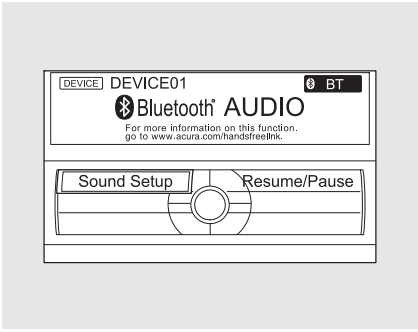


Press the AUDIO button to display the audio control display. Turn the dial to switch the setting between the resume/pause mode and the sound setup mode. Select Sound Setup, then press ENTER to set your selection.

Turn the dial to select a sound setup mode, then press ENTER to set your selection. See page 287 for more sound setting information.

*CONTINUED*

***To switch to HFL mode***
If you receive a call when the *Bluetooth*® Audio is playing, press the PICK-UP button on the steering wheel. The screen and the display switch to the HFL mode (see page 417).

After ending the call, press the HANG-UP button to go back to the *Bluetooth*® Audio mode.

***To turn off the Bluetooth® Audio mode***
Select any other audio mode by pressing a button; AM/FM, ((XM)) or DISC on the audio control panel, or press the MODE button on the steering wheel to select another audio mode.

Switching to another mode pauses the music playing from your phone.

*As required by the FCC:*
*This device complies with Part 15 of the FCC rules. Operation is subject to the following two conditions: (1) This device may not cause harmful interference, and (2) this device must accept any interference received, including interference that may cause undesired operation.*

*Changes or modifications not expressly approved by the party responsible for compliance could void the user's authority to operate the equipment.*

*This device complies with Industry Canada Standard RSS-210.*
*Operation is subject to the following two conditions: (1) this device may not cause interference, and (2) this device must accept any interference that may cause undesired operation of the device.*

## General Information

*On models without navigation system*

- When using CD-R or CD-RW discs, use only high quality discs labeled for audio use.
- When recording a CD-R or CD-RW, the recording must be closed for it to be used by the disc changer.

*On models with navigation system*

- When using CD-R, CD-RW, DVD-R or DVD-RW discs, use only high quality discs labeled for audio use.
- When recording a CD-R, CD-RW, DVD-R or DVD-RW the recording must be closed for it to be used by the disc player.
- When using DVD-R/RW discs, they should meet DVD verification standards.

*All models*

- Play only standard, round, 5-inch (12 cm) discs. Smaller or odd-shaped discs may jam in the drive or cause other problems.
- Handle your discs properly to prevent damage and skipping.

**NOTICE**

*Do not use discs with adhesive labels. The label can curl up and cause the disc to jam in the unit.*



*CONTINUED*

**Protecting Discs**
When a disc is not being played, store it in its case to protect it from dust and other contamination. To prevent warpage, keep discs out of direct sunlight and extreme heat.

To clean a disc, use a clean soft cloth. Wipe across the disc from the center to the outside edge.

A new disc may be rough on the inner and outer edges. The small plastic pieces causing this roughness can flake off and fall on the recording surface of the disc, causing skipping or other problems. Remove these pieces by rubbing the inner and outer edges with the side of a pencil or pen.

Never try to insert foreign objects in the disc changer.

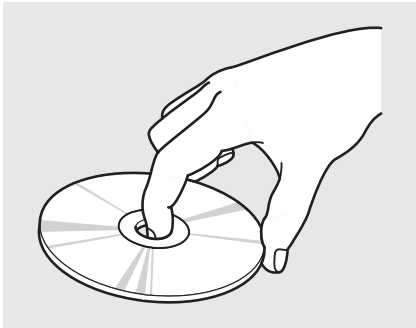

Handle a disc by its edges; never touch either surface. Do not place stabilizer rings or labels on the disc. These, along with contamination from finger prints, liquids, and felt-tip pens, can cause the disc to not play properly, or possibly jam in the drive.

**Additional Information on Recommended Discs**
The in-dash disc player/changer has a sophisticated and delicate mechanism. If you insert a damaged disc as indicated in this section, it may become stuck inside and damage the audio unit.

Examples of these discs are shown as follows.

1. Bubbled, wrinkled, labeled and excessively thick discs

Bubbled/ Wrinkled | With Label/ Sticker | Using Printer Label Kit | Sealed | With Plastic Ring

2. Damaged discs

Chipped/ Cracked | Warped

3. Poor quality discs

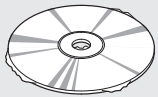

Burrs

4. Small, irregular shaped discs

3-inch (8-cm) CD | Triangle Shape

Can Shape | Arrow Shape

*CONTINUED*

5. Discs with scratches, dirty discs

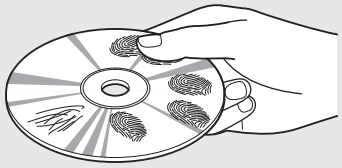

Fingerprints, scratches, etc.

*On models without navigation system*

- CD-R or CD-RW may not play due to the recording conditions.

*On models with navigation system*

- CD-R, CD-RW, DVD-R or DVD-RW may not play due to the recording conditions.
- Scratches and fingerprints on the discs may cause the sound to skip.
- Recommended discs are printed with the following logo.

COMPACT disc DIGITAL AUDIO

- Audio unit may not play the following formats.

mp3 Plays Windows Media™

- This audio unit cannot play a Dual-disc® .

**Radio Frequencies**
The radio can receive the complete AM and FM bands.
Those bands cover these frequencies:

AM band: 530 to 1,710 kHz
FM band: 87.7 to 107.9 MHz

Radio stations on the AM band are assigned frequencies at least 10 kHz apart (530, 540, 550). Stations on the FM band are assigned frequencies at least 0.2 MHz apart (87.9, 88.1, 88.3).

Stations must use these exact frequencies. It is fairly common for stations to round-off the frequency in their advertising, so your radio could display a frequency of 100.9 even though the announcer may identify the station as “FM101.”

**FM/AM Radio Reception**
How well the radio receives stations is dependent on many factors, such as the distance from the station's transmitter, nearby large objects, and atmospheric conditions.

A radio station's signal gets weaker as you get farther away from its transmitter. If you are listening to an AM station, you will notice the sound volume becoming weaker, and the station drifting in and out. If you are listening to an FM station, you will see the stereo indicator flickering off and on as the signal weakens. Eventually, the stereo indicator will go off and the sound will fade completely as you get out of range of the station's signal.

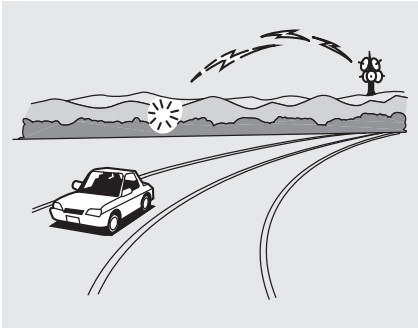

Driving very near the transmitter of a station that is broadcasting on a frequency close to the frequency of the station you are listening to can also affect your radio's reception. You may temporarily hear both stations, or hear only the station you are close to.



*CONTINUED*

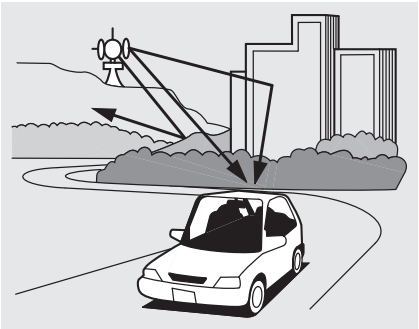

Radio signals, especially on the FM band, are deflected by large objects such as buildings and hills. Your radio then receives both the direct signal from the station's transmitter, and the deflected signal. This causes the sound to distort or flutter. This is a main cause of poor radio reception in city driving.

Radio reception can be affected by atmospheric conditions such as thunderstorms, high humidity, and even sunspots. You may be able to receive a distant radio station one day and not receive it the next day because of a change in conditions.

Electrical interference from passing vehicles and stationary sources can cause temporary reception problems.

*As required by the FCC:*
*Changes or modifications not expressly approved by the party responsible for compliance could void the user's authority to operate the equipment.*

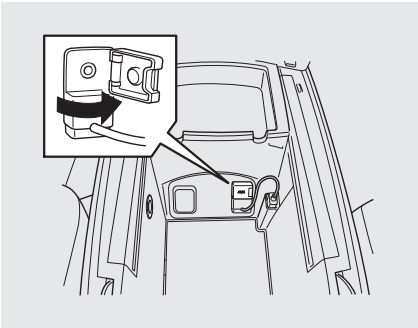

The auxiliary input jack is inside the front console compartment. The system will accept auxiliary input from standard audio accessories.

When a compatible audio unit is connected to the jack, press the USB/AUX button to select it.

## Remote Audio Controls

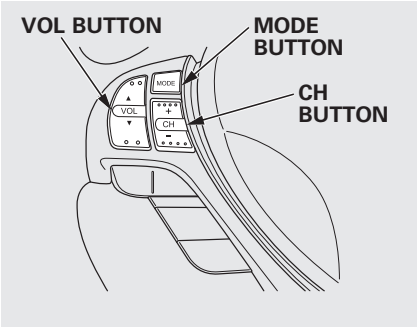


Three controls for the audio system are mounted in the steering wheel hub. These let you control basic functions without removing your hand from the wheel.

The VOL button adjusts the volume up (▲) or down (▼). Press the top or bottom of the button, hold it until the desired volume is reached, then release it.

The MODE button changes the mode. Pressing the MODE button repeatedly cycles through all present, connected media sources. Media sources that are not present or connected will not appear when cycling with the MODE button.

If you are listening to the radio, use the CH button to change stations. Each time you press the top (+) of the button, the system goes to the next preset station on the band you are listening to. Press the bottom (−) to go back to the previous station.



*CONTINUED*

To search up and down from the current frequency and find a station with a strong signal, press the top (+) or bottom (−) of the button for 1 second.

If you are listening to XM® Radio, use the CH button to change channels. Each time you press the top (+) of the button, the system goes to the next preset channel. Press the bottom (−) to go back to the previous preset channel.
To go to the next channel of the category you are listening to, press the top (+) of the button for 1 second. Press the bottom (−) for 1 second to go back to the previous channel.

If you are playing a disc, the system skips to the beginning of the next track/file (file in MP3, WMA, or AAC format) each time you press the top (+) of the CH button. Press the bottom (−) to return to the beginning of the current track/file. Press it twice to return to the previous track/file.

You will see the track/file number and the elapsed time. If the disc has text data or is compressed in MP3 or WMA, you can also see any other information (track title, file name, folder name, etc.).

In MP3 or WMA mode, you can use the seek function to select folders. Press and hold the top (+) of the CH button until you hear a beep, to skip forward to the first file of the next folder. Press and hold the bottom (−) to skip backward to the previous folder.

If you are playing a USB flash memory device or iPod with the USB adapter cable, press and release the top (+) of the CH button to skip forward to the beginning of the next file. Press the bottom (−) to skip backward to the beginning of the current file. Press it twice to return to the previous file.

*On vehicles without navigation system*
If you are playing a conventional CD (not compressed in MP3 or WMA), you can use the skip function to select discs. Press and hold the top (+) of the CH button until you hear a beep, to skip forward to the next disc. Press and hold the bottom (−) to skip backward to the previous disc.

# Radio Theft Protection

Your vehicle's audio system may disable itself if it is disconnected from electrical power for any reason. To make it work again, you must enter a specific five-digit code with the preset buttons. Because there are hundreds of number combinations possible from the five digits, making the system work without knowing the exact code is nearly impossible.

You should have received a card that lists your audio system code number and serial number. It is best to store this card in a safe place at home. In addition, you should write the audio system's serial number in this owner's manual.

If you lose the card, you must obtain the code number from your dealer. To do this, you will need the audio system's serial number.

**NOTE:** In the U.S., if you have a My Acura account, you can retrieve the anti-theft code online.

If your vehicle's battery is disconnected or goes dead, the audio system will disable itself. If this happens, you will see “ENTER CODE” in the frequency display (on the display on models with navigation system) the next time you turn on the system. Use the preset buttons to enter the five-digit code. The code is located on the radio code card included in your owner's manual kit. When it is entered correctly, the radio will start playing.

If you make a mistake entering the code, do not start over; complete the five-digit sequence, then enter the correct code. You have 10 tries to enter the correct code. If you are unsuccessful in 10 attempts, you must then leave the system on for 1 hour before trying again.

The system will retain your AM and FM presets even if power is disconnected.

**On models without navigation system**

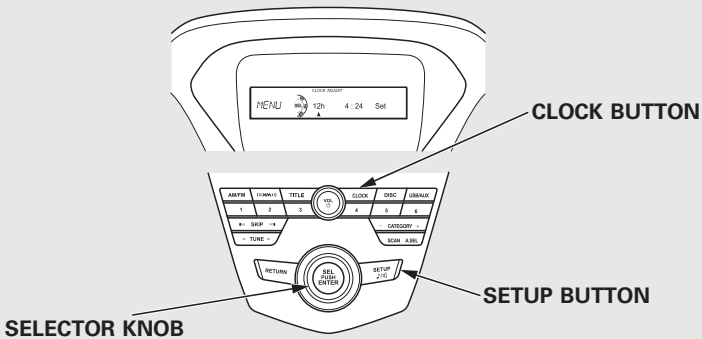


*On models without navigation system*
To adjust the clock setting:

1. Press and release the SETUP button. The display shows you the menu items.

You can adjust the clock setting with the ignition switch in the ACCESSORY (I) or ON (II) position.

2. Turn the selector knob to select "CLOCK ADJUST."
3. Press the selector knob (ENTER) to enter your selection. The display changes to the clock adjusting display.

   You can also adjust the clock by using the CLOCK button. Press the CLOCK button until you hear a beep.

*CONTINUED*

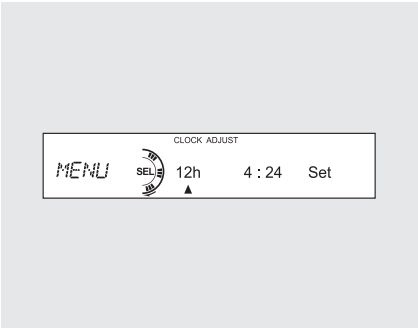


4. Turn the selector knob to select the item which you want to adjust. Turning the selector knob will change the selected item between the clock display setting, hours, minutes, and Set. The selected item is indicated with ▲ in the display.

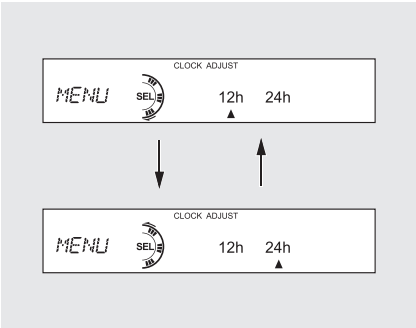


5. To change the clock display setting, turn the selector knob and select 12h/24h, then press the knob. Turn the selector knob to change the setting between 12h and 24h.

6. Press the selector knob (ENTER) to enter your selection. The display will return to the clock adjusting display.

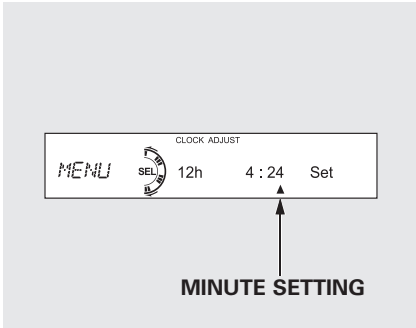


7. To set the time, turn the selector knob and select the hours or the minutes, then press the knob to enter your selection. The display changes to the setting display.

8. Turn the selector knob to count the numbers up or down.

9. Press the selector knob (ENTER) to enter your selection. The display will return to the clock adjusting display.

While setting the clock, pressing the RETURN button will go back to the previous display.
Pressing the SETUP button again will cancel this setting mode.

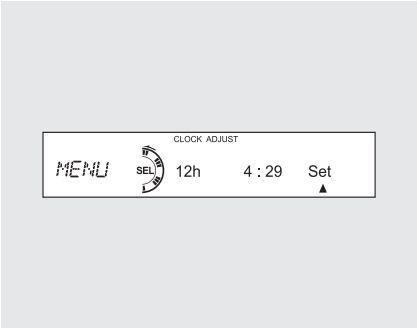


10. To enter the clock setting, turn the selector knob to select “Set,” then press the knob. The display will return to the menu item display.
11. Press either the RETURN or SETUP button to go back to the normal display.

*On models with navigation system*
The navigation system receives signals from the global positioning system (GPS), and the displayed time is updated automatically by the GPS. Refer to the navigation system manual for how to adjust the time.

The security system helps to protect your vehicle and valuables from theft. The horn sounds and a combination of headlights, position lights, side marker lights and taillights flashes if someone attempts to break into your vehicle or remove the audio unit. This alarm continues for 2 minutes, then the system resets. To reset an activated system before the 2 minutes have elapsed, unlock the driver's door with the key or the remote transmitter/keyless access remote.

The security system automatically sets 15 seconds after you lock the doors, hood, and the tailgate. For the system to activate, you must lock the doors and the tailgate from the outside with the key, driver's lock tab, door lock master switch, or remote transmitter/keyless access remote. The security system indicator on the instrument panel starts blinking immediately to show you the system is setting itself.

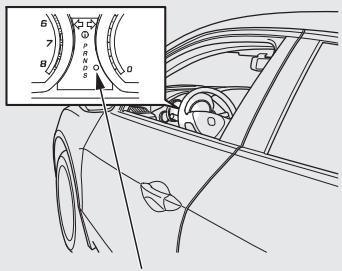


SECURITY SYSTEM INDICATOR

Once the security system is set, opening any door, the tailgate, or the hood without using the key or the remote transmitter/keyless access remote, will cause it to alarm. It also alarms if the audio unit is removed from the dashboard or the wiring is cut.

The security system will not set if the hood, tailgate, or any door is not fully closed. If the system will not set, check that the doors, the tailgate and the hood are fully closed.

Do not attempt to alter this system or add other devices to it.

Cruise control allows you to maintain a set speed above 25 mph (40 km/h) without keeping your foot on the accelerator pedal. It should be used for cruising on straight, open highways. It is not recommended for city driving, winding roads, slippery roads, heavy rain, or bad weather.

**⚠WARNING**

Improper use of the cruise control can lead to a crash.

Use the cruise control only when traveling on open highways in good weather.

## Using Cruise Control

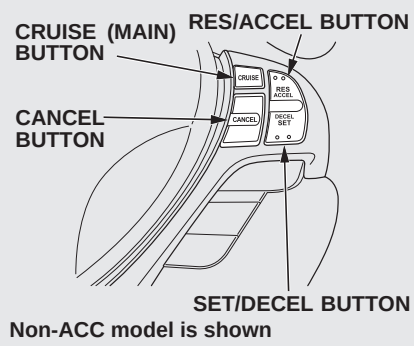


Non-ACC model is shown

1. Push in the CRUISE button or MAIN button (models with adaptive cruise control) on the steering wheel. The CRUISE MAIN indicator on green ACC indicator (models with ACC) on the instrument panel comes on.

   *On models with adaptive cruise control*
   To switch from ACC to cruise control, press the distance button on the steering wheel, and hold it for 1 second (see page 395).

2. Accelerate to the desired cruising speed above 25 mph (40 km/h).

3. Press and release the SET/DECEL button on the steering wheel. The CRUISE CONTROL indicator on the instrument panel comes on to show the system is now activated.

*CONTINUED*

Cruise control may not hold the set speed when you are going up and down hills. If your vehicle speed increases going down a hill, use the brakes to slow down. This will cancel the cruise control. To resume the set speed, press the RES/ACCEL button. The CRUISE CONTROL indicator on the instrument panel will come back on.

**Changing the Set Speed**

You can increase the set cruising speed in any of these ways:

- Press and hold the RES/ACCEL button. When you reach the desired cruising speed, release the button.
- Push on the accelerator pedal. Accelerate to the desired cruising speed, then press the SET/DECEL button.
- To increase the speed in very small amounts, tap the RES/ACCEL button. Each time you do this, your vehicle will speed up about 1 mph (1.6 km/h).

You can decrease the set cruising speed in any of these ways:

- Press and hold the SET/DECEL button. Release the button when you reach the desired speed.
- To slow down in very small amounts, tap the SET/DECEL button. Each time you do this, your vehicle will slow down about 1 mph (1.6 km/h).
- Tap the brake pedal lightly with your foot. The CRUISE CONTROL indicator on the instrument panel will go out. When the vehicle slows to the desired speed, press the SET/DECEL button.

Even with cruise control turned on, you can still use the accelerator pedal to speed up for passing. After completing the pass, take your foot off the accelerator pedal. The vehicle will return to the set cruising speed.

Resting your foot on the brake pedal causes cruise control to cancel.

## Canceling Cruise Control

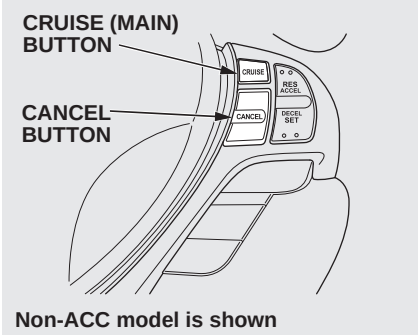


Non-ACC model is shown

You can cancel cruise control in any of these ways:

- Tap the brake pedal.
- Push the CANCEL button on the steering wheel.
- Push the CRUISE (MAIN) button on the steering wheel.

## Resuming the Set Speed

When you push the CANCEL button or tap the brake pedal, the system remembers the previously set speed. To return to that speed, accelerate to above 25 mph (40 km/h), then press and release the RES/ACCEL button. The CRUISE CONTROL (ACC) indicator comes on. The vehicle accelerates to the same speed as before.

Pressing the CRUISE (MAIN) button turns the system completely off and erases the previous cruising speed.

## ACC Components

*If equipped*

Adaptive cruise control (ACC) consists of a radar sensor in the front grille, the ACC buttons on the steering wheel, and the ACC functions of the multi-information display.

The radar sensor for ACC is shared with the collision mitigation braking system™ (CMBS™). For more information on the radar sensor, see page 499. For more information on CMBS, see page 498.

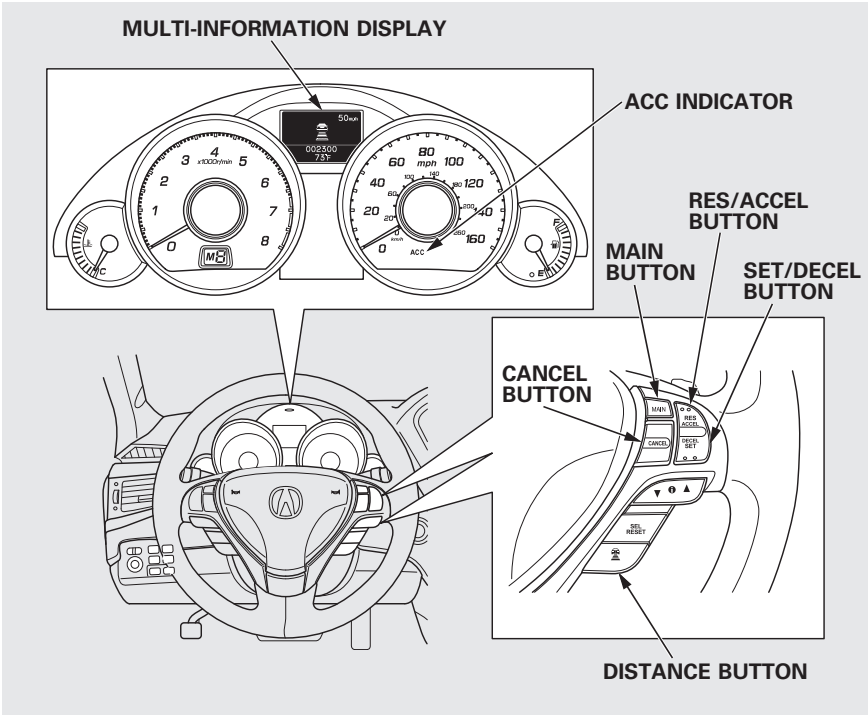

**Overview**
Adaptive cruise control (ACC) allows you to maintain a set speed and keep the vehicle ahead of you and your vehicle at a safe distance without having to use the accelerator pedal or the brake pedal.

When the vehicle ahead of you slows down or speeds up, ACC senses the change in distance and compensates by accelerating or braking your vehicle to reach the cruising speed you previously set. The distance between vehicles is based on your speed: the faster you go, the longer the distance will be; the slower you go, the shorter it will be.

If the vehicle ahead of you slows down suddenly or another vehicle cuts in front of your vehicle, ACC alerts you by sounding a beeper and displaying a message on the multi-information display.
The ACC radar sensor in the front grille can detect and monitor the distance of a vehicle up to 328 feet (100 meters) ahead of your vehicle. For more information on the radar sensor, see page 499.

**Important Safety Precautions**
As with any system, there are limits to ACC. Inappropriate use of ACC can result in a serious accident. Use the brake pedal whenever necessary, and always keep a safe distance between your vehicle and other vehicles.

Do not use ACC under these conditions:

- In poor visibility.
- In heavy traffic.
- When you must slow down and speed up repeatedly.
- On winding roads.
- When you enter a toll gate, interchange, service area, parking area, etc. In these areas, there is no vehicle ahead of you, but ACC would still try to accelerate to your set speed.
- In bad weather (rain, fog, snow, etc.)
- On a slippery road (for example a road covered with ice or snow).



*CONTINUED*

**⚠ WARNING**

Improper use of ACC can lead to a crash.

Use ACC only when traveling on open highways in good weather.

## Operating Characteristics

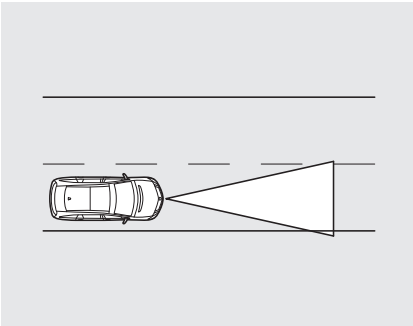

*When there is no vehicle ahead within ACC range*

Your vehicle will maintain a set cruising speed.

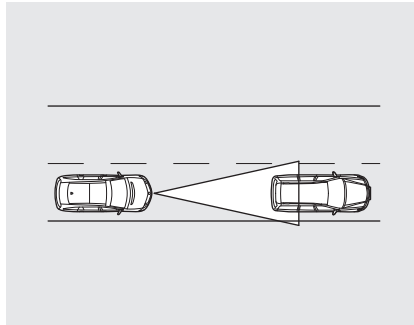

*When a vehicle ahead is within ACC range and going slower than your set speed*

If the vehicle ahead of you is going slower than your set speed, your vehicle will slow down to the speed of that vehicle. Your vehicle will then follow at a constant distance until the vehicle ahead changes speed again.

If the vehicle ahead of you slows down abruptly, or if another vehicle cuts in front of you, a beeper sounds and a message appears on the multi-information display to warn you.

In this case, decelerate your vehicle by pressing the brake pedal, and keep an appropriate distance from the vehicle ahead.

If CMBS is turned off, there is no multi-information display message and the warning beep does not sound.

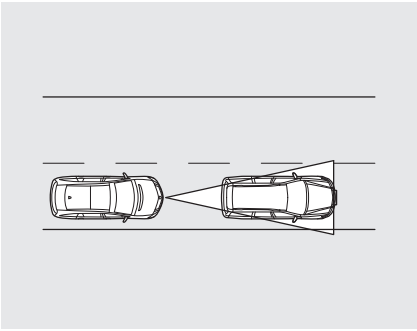

*When a vehicle ahead is within ACC range and going at a steady speed*
Your vehicle follows the vehicle ahead of it, keeping a constant distance. ACC will not keep your vehicle at a constant distance if the vehicle ahead of you goes out of range of your set speed.

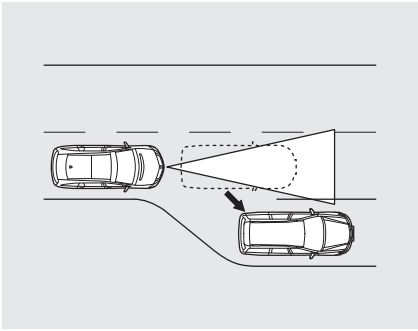

If the vehicle ahead of you slows down and changes lanes, ACC no longer tracks it. Your vehicle will then return to your set speed.



*CONTINUED*

### Limitations

- ACC does not work below 25 mph (40 km/h). It cannot bring your vehicle to a complete stop.
- ACC will not sound a beeper or display a message on the multi-information display to warn you of vehicles going slower than 13 mph (20 km/h) or vehicles that are parked. In these cases, it is up to you to maintain a safe distance by using the brake pedal.
- ACC may not recognize motorcycles or other small vehicles ahead of your vehicle.
- ACC may react to vehicles beside you or even a building beside you by momentarily applying the brakes or sounding a beeper under conditions such as a sudden curve or narrowing of the road, an abrupt movement of the steering wheel, or if you are in an unusual position within your lane.

### Using the ACC

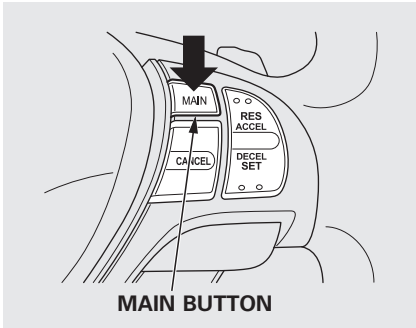


1. Push the MAIN button on the steering wheel. The ACC indicator on the instrument panel comes on, and “ACC” is shown on the multi-information display.
2. Accelerate to the desired speed above 25 mph (40 km/h).

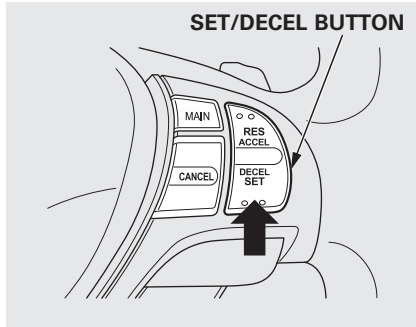


3. Press and release the SET/DECEL button on the steering wheel, then release the accelerator pedal.

If you press the SET/DECEL button when the vehicle speed is below 25 mph (40 km/h), you will hear a beep about 1 second. This means ACC is not activated, and you cannot set your speed.

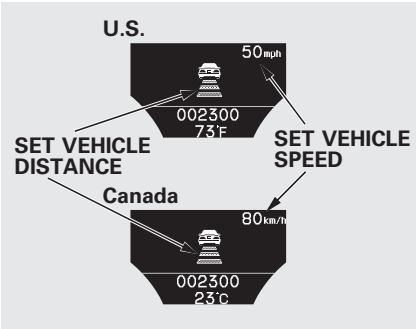


When the speed is set, it is shown along with a vehicle icon and distance bars on the multi-information display.
Refer to page 390 for how to set and change the set distance between your vehicle and the vehicle ahead of you.

To change the speed unit measurement from mph to km/h, see page 104.

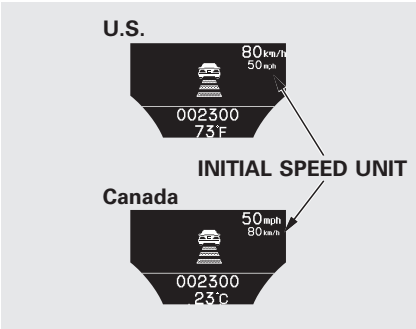


If you change the speed unit measurement from the factory default setting, the initial speed unit measurement is shown under the current unit.

## Increasing the Set Speed

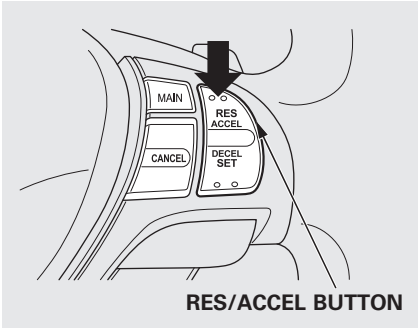


The set speed can be increased by using the RES/ACCEL button or the accelerator pedal.

*CONTINUED*

To increase the set speed with the RES/ACCEL button, do this:

Press and hold the RES/ACCEL button. The vehicle will accelerate. When you reach the speed you want, release the button.

To increase your speed in small amounts, tap the RES/ACCEL button repeatedly. Each time you do this, your vehicle will speed up about 1 mph (1 km/h).

While the vehicle accelerates to the set speed, the set speed on the multi-information display will flash.

If a vehicle ahead of you is driving at a slower speed than the speed you want to set, your vehicle will not accelerate; it will keep some distance between your vehicles.

To increase the set speed with the accelerator pedal, do this:

Press the accelerator pedal to accelerate to the speed you want, then press the SET/DECEL button. The set speed will be shown on the multi-information display. If you do not press the SET/DECEL button, your vehicle will return to the previously set speed.

The ACC beeper will not sound while you press the accelerator pedal, no matter how close you get to the vehicle ahead of you.

**Decreasing the Set Speed**
The set speed can be decreased using the SET/DECEL button or the brake pedal.

To decrease the set speed with the SET/DECEL button, do this:

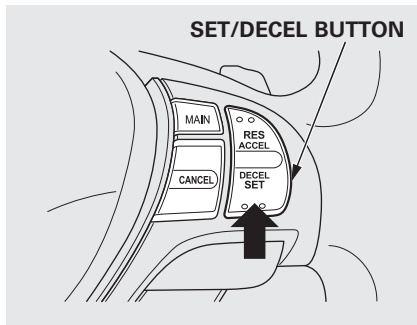


Press and hold the SET/DECEL button. Release the button when you reach the speed you want.

To slow down in small amounts, tap the SET/DECEL button repeatedly.

Each time you do this, your vehicle slows down about 1 mph (1 km/h).

The set cruising speed will be shown on the multi-information display.

On a steep downhill, the vehicle speed may exceed the set cruising speed.

To decrease the set speed with the brake pedal, do this:

Tap the brake pedal. When the vehicle slows down to the speed you want, press the SET/DECEL button. The set speed will be shown on the multi-information display. If you use the brake pedal to decrease speed, and then press the RES/ACCEL button, your vehicle will return to the previously set speed.

## Detecting a Vehicle Ahead of You

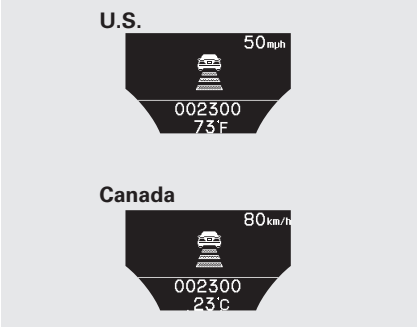


When the system detects a vehicle ahead of you, a beeper sounds once and a solid-line vehicle icon appears on the multi-information display.

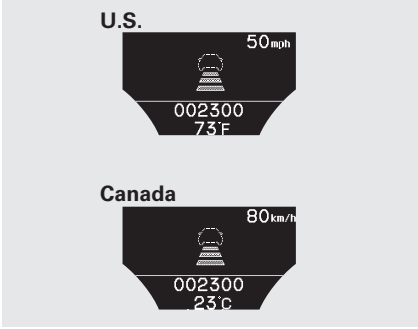


When that vehicle changes lanes or goes out of ACC range, a beeper sounds once. If there is no vehicle ahead of you within ACC range, a dotted-line vehicle icon will be on the multi-information display.
To set the ACC beeper on or off, see page 103.



*CONTINUED*

## Changing Vehicle Distance

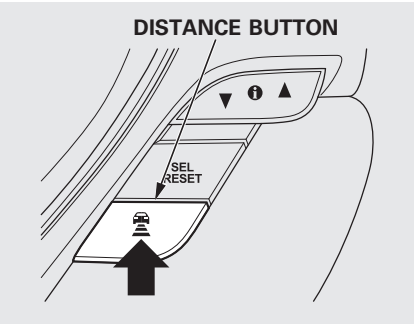


With ACC on, the distance between your vehicle and the vehicle ahead of you is controlled and maintained. You can change this distance to one of three ranges: long, middle, or short.

To change the range, press the DISTANCE button. Each time you press the button, the range changes from Long, to Middle, and then to Short.

The higher your vehicle speed is, the longer the distance between the vehicle in front will be set as shown below.

| Vehicle Distance \ Speed | 50 mph (80 km/h) | 65 mph (104 km/h) |
|---|---|---|
| Long | 154 feet 47 meters | 200 feet 61 meters |
| Middle | 111 feet 34 meters | 173 feet 53 meters |
| Short | 85 feet 26 meters | 101 feet 31 meters |

The distance you select is also shown on the multi-information display.

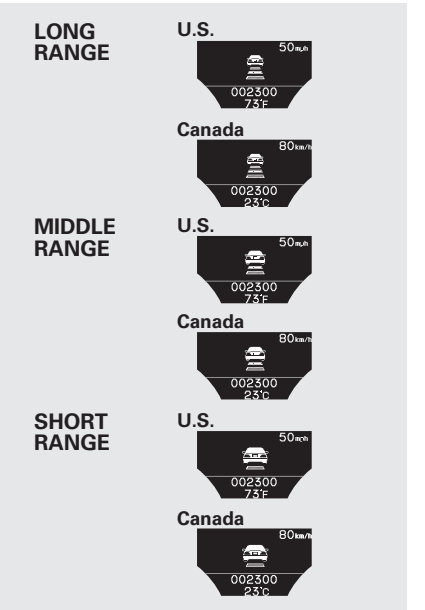

## Canceling the ACC

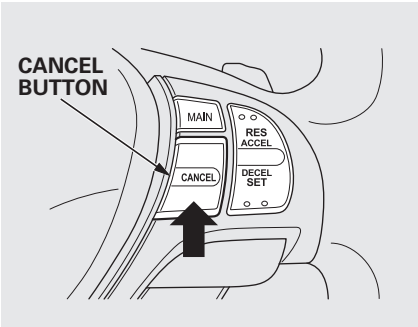


ACC is canceled whenever you do any of these actions:

- Push the CANCEL button on the steering wheel.
- Tap the brake pedal.
- Press the MAIN button. The ACC indicator in the instrument panel goes off.

When you push the CANCEL button or tap the brake pedal to cancel ACC, the set cruising speed stays in memory. When you turn on ACC again, the speed is shown on the multi-information display. To return to that speed, accelerate to over 25 mph (40 km/h), then press the RES/ACCEL button.

If you cancel ACC by pressing the MAIN button, the previously set cruising speed is erased from memory.

## Automatic ACC Cancelation

When ACC is automatically canceled, the beeper sounds about 1 second, and an ACC OFF message appears on the multi-information display for 3 seconds.

Any of these conditions may cause ACC to cancel:

- The vehicle speed decreases below 22 mph (35 km/h).
- Poor weather (rain, fog, snow, etc.)
- When the radar sensor in the front grille gets dirty.
- The vehicle ahead of you cannot be detected.
- An abnormal tire condition is detected, or the tires are skidding.
- Driving on a mountainous road, or driving off road for extended periods.
- Abrupt steering wheel movement.

*CONTINUED*

- When the ABS or VSA is activated.
- When the VSA indicator comes on.

If ACC is canceled by any these conditions, wait until the condition improves, then press the RES/ ACCEL button to restore ACC. When you do this, the vehicle will resume its set cruising speed.

If you select the ACCESSORY or VEHICLE OFF(LOCK) mode by operating the engine start/stop button (see page 194) after ACC was automatically canceled, the set speed is erased, and you must enter it again (see page 386).

**ACC Indicator**

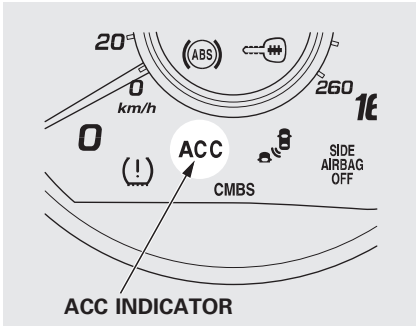


The ACC indicator (orange) normally comes on for a few seconds when you select the ON mode by operating the engine start/stop button (see page 194). If it comes on at any other time, there is a problem in the ACC system. If this happens, take the vehicle to your dealer to have it checked.

The ACC system cannot be used while this indicator (orange) is on.

## Messages on the Multi-Information Display

The multi-information display shows various messages related to ACC. For a description of each ACC message you may see, refer to the chart on this and the following page.

| Message | Description |
|---|---|
| U.S. model is shown. | ACC is on. |
| U.S. 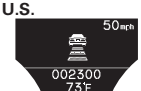  Canada | ACC detects a vehicle ahead of you.<br><br>You will hear a beep when the vehicle moves out of the ACC radar sensor's range. |
| U.S. 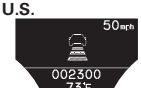  Canada 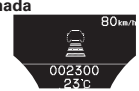  | ACC does not detect a vehicle ahead of you.<br><br>You will hear a beep when ACC detects a vehicle ahead of you. |

*CONTINUED*

| Message | Description | Message | Description |
|---|---|---|---|
| ACC OFF<br>002300<br>CHECK RADAR | ACC has automatically canceled because its radar sensor in the front grille is dirty.<br><br>You will hear a beep for about 1 second. | BRAKE | Apply the brakes immediately. Your vehicle is too close to the vehicle ahead of it.<br><br>You will hear a continuous beep.<br><br>If CMBS is turned off, there is no multi-information display message and the warning beep does not sound. |
| ACC OFF<br>002300<br>73°F | ACC has automatically canceled because of bad weather or other conditions.<br><br>You will hear a beep for about 1 second. | ACC CHECK ACC SYSTEM | ACC needs to be checked.<br><br>Have your vehicle checked by a dealer. |

## Switching to Cruise Control

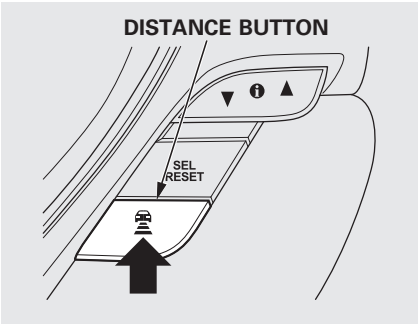


To switch from ACC to cruise control, press the distance button on the steering wheel, and hold it for 1 second.

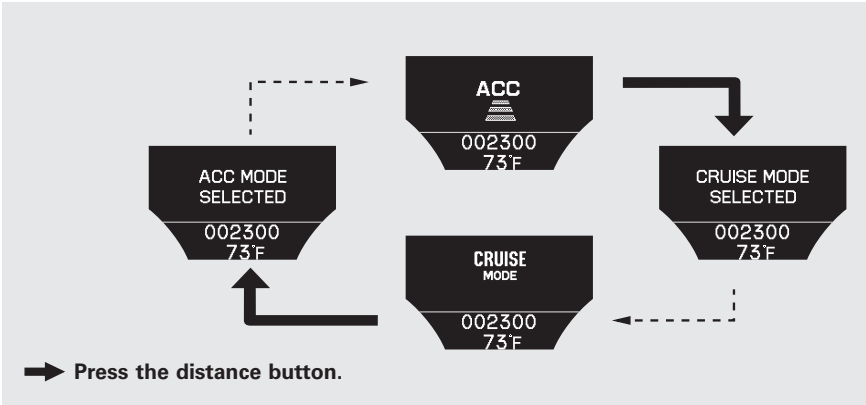


When you press the button, you will see CRUISE MODE SELECTED on the multi-information display for 2 seconds. To switch back to ACC, press and hold the distance button again for 1 second.

When the cruise control is selected, ACC does not sound a beeper or display a message on the multi-information display. Make sure to keep a safe distance from the vehicle ahead of you.

Always be aware which mode is selected.

The HomeLink® Universal Transceiver built into your vehicle can be programmed to operate up to three remote controlled devices around your home, such as garage doors, lighting, or home security systems.

**General Safety Information**

Before programming your HomeLink to operate a garage door opener, confirm that the opener has an external entrapment protection system, such as an "electronic eye," or other safety and reverse stop features.

If your garage door was manufactured before April 1, 1982, you may not be able to program HomeLink to operate it. These units do not have safety features that cause the motor to stop and reverse it if an obstacle is detected during closing, increasing the risk of injury. Do not use HomeLink with any garage door opener that lacks safety stop and reverse features.

Units manufactured between April 1, 1982 and January 1, 1993 may be equipped with safety stop and reverse features. If your unit does not have an external entrapment protection system, an easy test to confirm the function and performance of the safety stop and reverse feature is to lay a 2 × 4 under the closing door. The door should stop and reverse upon contacting the piece of wood.

As an additional safety feature, garage door openers manufactured after January 1, 1993 are required to have external entrapment protection systems, such as an electronic eye, which detect an object obstructing the door.

**Important Safety Precautions**

Refer to the safety information that came with your garage door opener to test that the safety features are functioning properly. If you do not have this information, contact the manufacturer of the equipment.

Before programming HomeLink to a garage door or gate opener, make sure that people and objects are out of the way of the device to prevent potential injury or damage.

When programming a garage door opener, park just outside the garage.

## Training HomeLink

***Before you begin*** – If you just received your vehicle and have not trained any of the buttons in HomeLink before, you should erase any previously learned codes before training the first button.

To do this, press and hold the two outside buttons on the HomeLink transceiver for about 20 seconds, until the red indicator flashes. Release the buttons, then proceed to step 1.

If you are training the second or third buttons, go directly to step 1.

## Training a Button

**1** Position the remote transmitter you wish to link 1-3 inches (3-8cm) from the HomeLink button you want to program.

**2** Press and hold the desired HomeLink button and the button on the remote transmitter you wish to link.
Does the HomeLink indicator (LED) blink at a faster rate after about 10 seconds?

NO → **a** Press and hold the button on the remote and the HomeLink button at the same time. Then, while continuing to hold the HomeLink button, press and release the button on the remote every 2 seconds.
Does the LED blink at a faster rate within 20 seconds?

NO → step 1

YES → step 3

YES → step 3

**3** Press and hold the programmed HomeLink button for about a second.
Does the device (garage door opener) work?

NO → **4** Press and hold the HomeLink button again.

YES → Training complete

HomeLink indicator flashes for 2 seconds, then remains on. → **a** The remote has a rolling code. Press the "learn" button on the remotely controlled device (e.g., garage door opener).

HomeLink LED is on. → **b** Within 30 seconds, press and hold the programmed HomeLink button for 2 seconds.

**5** Press the programmed HomeLink button again; the remotely controlled device should operate.

## Retraining a Button

**1** Press and hold the desired HomeLink button until the HomeLink indicator begins to flash slowly.

Indicator remains on for about 25 seconds (standard transmitter)

Indicator flashes rapidly for 2 seconds, then remains on for about 23 seconds (rolling code transmitter)

**2** When the indicator begins to flash slowly, continue to hold the HomeLink button and follow steps 1-3 under Training a Button.

## Erasing Codes

To erase codes stored in all buttons, press and hold the two outer buttons until the HomeLink indicator begins to flash (about 10 to 20 seconds), then release the buttons. You should erase all three codes before selling the vehicle.

If you have any problems programming HomeLink, see the owner's manual included with the device you are trying to program, or call HomeLink at 1-800-355-3515 or go online to www.homelink.com.

*CONTINUED*

HomeLink® is a registered trademark of Johnson Controls, Inc.

*As required by the FCC:*
*This device complies with Part 15 of the FCC rules. Operation is subject to the following two conditions: (1) This device may not cause harmful interference, and (2) this device must accept any interference received, including interference that may cause undesired operation.*

*Changes or modifications not expressly approved by the party responsible for compliance could void the user's authority to operate the equipment.*

*This device complies with Industry Canada Standard RSS-210.*
*Operation is subject to the following two conditions: (1) this device may not cause interference, and (2) this device must accept any interference that may cause undesired operation of the device.*

*Bluetooth*® HandsFreeLink® (HFL) allows you to place and receive phone calls using voice commands, without handling your cell phone.

To use HFL, you need a Bluetooth-compatible cell phone. For a list of compatible phones, pairing procedures, and special feature capabilities:

In the U.S., visit *www.acura.com/handsfreelink*, or call (888) 528-7826.

In Canada, visit *www.acura.ca*, or call (888) 9-ACURA-9.

## Using HFL

### *HFL Buttons*

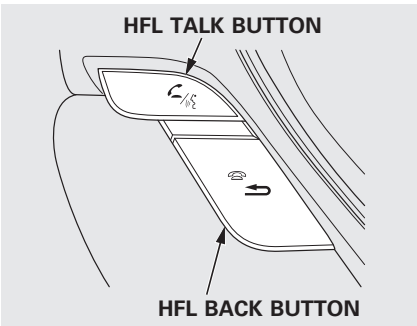


**HFL Talk button** – Press and release to give a command or answer a call.

**HFL Back button** – Press and release to end a call, go back to the previous command, or cancel the command.

### *Voice Control Tips*

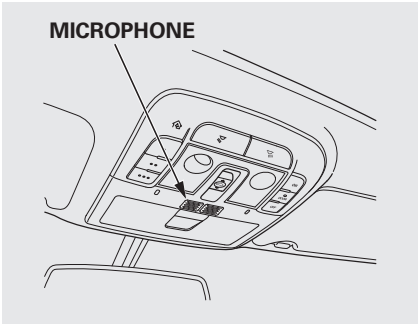


- Air or wind noise from the dashboard and side vents or all windows may interfere with the microphone.
  Adjust or close them as necessary.
- Press and release the HFL Talk button each time you want to make a command. After the beep, speak in a clear, natural tone.

*CONTINUED*

- Try to reduce all background noise. If the microphone picks up voices other than yours, commands may be misinterpreted.
- Many commands can be spoken together. For example, you can say "**Call** 123-456-7890" or "**Dial** Peter."
- To change the volume level of HFL, use the audio system volume knob or the steering wheel volume controls.

***Help Features***

- To hear general HFL information, including help on pairing a phone or setting up the system, say "**Tutorial.**"
- For help at any time, including a list of available commands, say "**Hands free help.**"

***Information Display***

As an incoming call notification, you will see the following display:

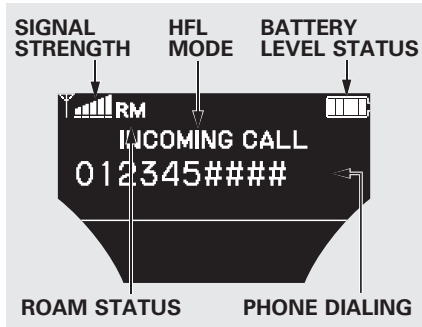


Some phones may send battery, signal strength, and roaming status information to HFL.

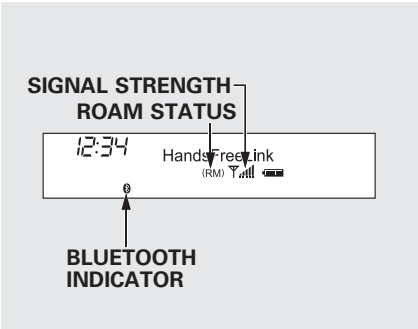


You will see “HANDSFREELINK” and the “ ” indicator on the display when you operate HFL.



*CONTINUED*

## How to Use HFL

**The ignition switch must be in the ACCESSORY (I) or ON (II) position.**

- **Press HFL Talk button**
  - **"Phone Setup"**
    - **"Pair"** — Pair a phone to the system (See page 405)
    - **"Edit"** — Edit the name of a paired phone (See page 405)
    - **"Delete"** — Delete a paired phone from the system (See page 406)
    - **"List"** — Hear a list of all phones paired to the system (See page 406)
    - **"Status"** — Hear which paired phone is currently linked to the system (See page 406)
    - **"Next Phone"** — Search for another previously paired phone to link to (See page 407)
    - **"Set Pairing Code"** — Set the pairing code to a "Fixed" or "Random" number (See page 407)
  - **"Call" or "Dial"**
    - **"123-555-####"** — Enter desired phone number (See page 408)
    - **"Jim Smith"** — Once a phonebook entry is stored, you can say a name here. (See page 408)

**Press and release the HFL Talk button each time you give a command.**

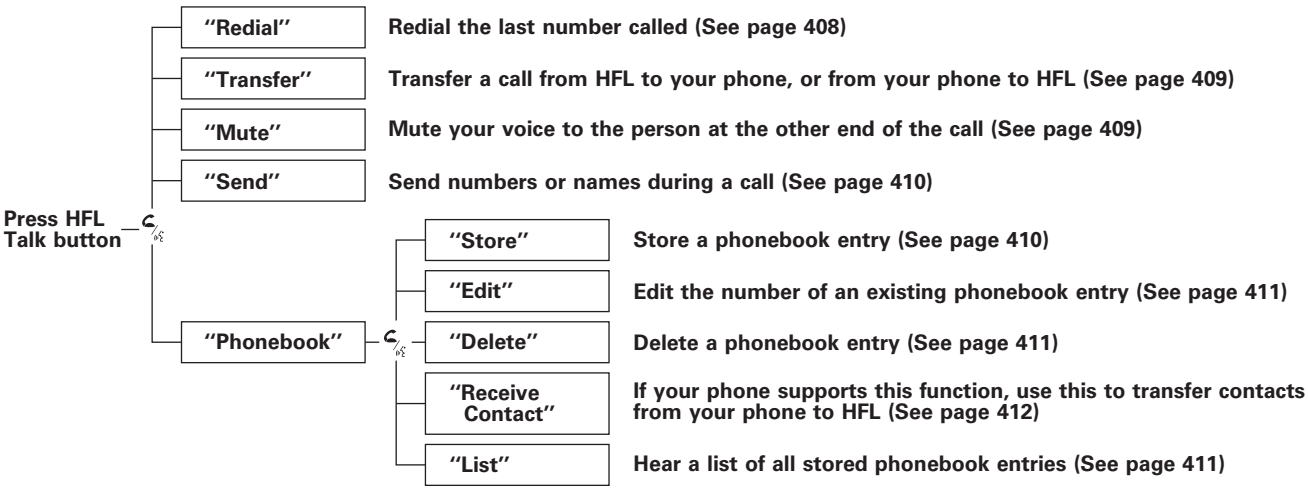


Press and release the HFL Talk button each time you give a command.

*CONTINUED*

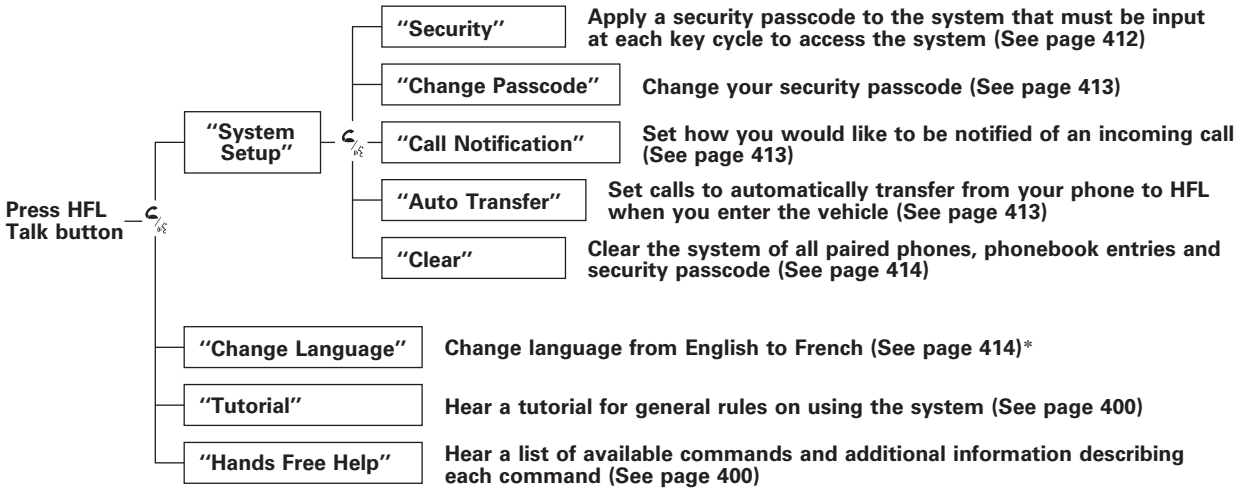


Press and release the HFL Talk button each time you give a command.

*: Canadian models

To Use HFL, you need to pair your Bluetooth-compatible cell phone to the system.

**Phone Setup**
This command group is available for paired cell phones.

***Phone pairing tips***

- You cannot pair your phone while the vehicle is moving.
- Your phone must be in discovery or search mode to pair. Refer to your phone's manual.
- Up to six phones can be paired.
- Your phone's battery may drain faster when it is paired to HFL.
- If after three minutes your phone is not ready to pair or a phone is not found, the system will time out and return to idle.

***To pair a cell phone:***

1. Press and release the HFL Talk button. If you are pairing a phone for the first time, HFL will give you information about the pairing process. If it is not the first phone you are pairing, say "**Phone setup**" and say "**Pair.**"
2. Follow the HFL prompts and put your phone in discovery or search mode. HFL will give you a 4-digit pairing code and begin searching for your phone.
3. When your phone finds a Bluetooth device, select HFL from the options and enter the 4-digit code from the previous step.
4. Follow the HFL prompts and name the newly paired phone.

***To rename a paired phone:***
Press and release the HFL Talk button before a command.

1. Say "**Phone setup.**"
2. Say "**Edit**" after the prompts.
3. If there is more than one phone paired to the system, HFL will ask you which phone's name you want to change. Follow the HFL prompts and rename the phone.



*CONTINUED*

***To delete a paired phone:***
Press and release the HFL Talk button before a command.

1. Say "**Phone setup.**"
2. Say "**Delete**" after the prompts.
3. HFL will ask you which phone you want to delete. Follow the HFL prompts to continue with the deletion.

***To hear the names of all paired phones:***
Press and release the HFL Talk button before a command.

1. Say "**Phone setup.**"
2. Say "**List**" after the prompts.
3. HFL will read out all the paired phone's names.

***To hear which paired phone is currently linked:***
Press and release the HFL Talk button before a command.

1. Say "**Phone setup.**"
2. Say "**Status**" after the prompts.
3. HFL will tell you which phone is linked to the system.

***To change from the currently linked phone to another paired phone:***
Press and release the HFL Talk button before a command.

1. Say "**Phone setup.**"
2. Say "**Next phone**" after the prompts.
3. HFL disconnects the linked phone and searches for another paired phone.
4. Once another phone is found, it is linked to the system. HFL will inform you which phone is now linked.

If no other phones are found or paired, HFL will inform you that the original phone is linked again.

***To change the pairing code setting:***
Press and release the HFL Talk button before a command.

1. Say "**Phone setup.**"
2. Say "**Set pairing code**" after the prompts.
3. If you want HFL to create a random code each time you pair a phone, say "**Random.**" If you want to choose your own 4-digit code to be used each time, say "**Fixed**" and follow the HFL prompts.

**Making a Call**
You can make calls using a name in the HFL phone book or any phone number. You can also redial the last number called.

Bluetooth is the wireless technology that links your phone to HFL. HFL uses a Class 2 Bluetooth, which means the maximum range between your phone and vehicle is 30 feet (10 meters).

During a call, HFL allows you to talk up to 30 minutes after you remove the key from the ignition switch. However, this may weaken the vehicle's battery.



*CONTINUED*

***To make a call using a name in the HFL phonebook:***
Press and release the HFL Talk button before a command.

1. Say "**Call**" or "**Dial.**"
2. Follow the HFL prompts and say the name stored in the HFL phonebook that you want to call.
3. Follow the HFL prompts to confirm the name and make the call.

***To make a call using a phone number:***
Press and release the HFL Talk button before a command.

1. Say "**Call**" or "**Dial.**"
2. Follow the HFL prompts and say the phone number you want to dial.
3. Follow the HFL prompts to confirm the number and say "**Call**" or "**Dial.**"

Once connected, you will hear the person you called through the audio speakers.

***To redial the last number called by HFL:***
Press and release the HFL Talk button and say "**Redial.**"

**Receiving a Call**
When you receive a call, an incoming call notification (if activated) will play and interrupt the audio system if it is on.

Press the HFL Talk button to answer the call, or the HFL Back button to hang up.

***Call Waiting***

If your phone has Call Waiting, press and release the HFL Talk button to put the original call on hold and answer the incoming call.

To return to the original call, press the HFL Talk button again. If you don't want to answer the incoming call, disregard it and continue with your original call. If you want to hang up the original call and answer the new call, press the HFL Back button.

**Transferring a Call**

You can transfer a call from HFL to your phone, or from your phone to HFL.

Press and release the HFL Talk button and say "**Transfer.**"

**Muting a Call**

You can mute your voice to the person you are talking to during a call.

To mute your voice during a call, press and release the HFL Talk button and say "**Mute.**"

To unmute your voice, press and release the HFL Talk button and say "**Mute**" again.



*CONTINUED*

### Send Numbers or Names During a Call

HFL allows you to send numbers or names during a call. This is useful when you call a menu-driven phone system.

***To send a name or number during a call:***

Press and release the HFL Talk button before a command.

1. Say "**Send.**"
2. Follow the HFL prompts and say the name or number you want to send.
3. Follow the HFL prompts to send the tones and continue the call.

**NOTE:** To send a pound (#), say "pound." To send a star (*), say "star."

### Phonebook

You can store up to 50 names with their associated numbers in HFL. The numbers you store cannot only be phone numbers but other types, such as account numbers or passwords, which can be sent during a menu-driven call.

***To store a phonebook entry:***

Press and release the HFL Talk button before a command.

1. Say "**Phonebook.**"
2. Say "**Store**" after the prompts.
3. Say a name you want to list as your phonebook entry.
4. Say the number you want to store for the name entry.
5. Follow the HFL prompts and say "**Enter**" to store the entry.

**NOTE:**

- Avoid using duplicate name entries.
- Avoid using "home" as a name entry.
- It is easier for HFL to recognize a multisyllabic or longer name. For example, use "Peter" instead of "Pete," or "John Smith" instead of "John."

***To edit the number stored in a name:***
Press and release the HFL Talk button before a command.

1. Say "**Phonebook.**"
2. Say "**Edit**" after the prompts.
3. Follow the HFL prompts and say the name entry you want to edit.
4. When asked, say the new number for that name.
5. Follow the HFL prompts to complete the edit.

***To delete a name:***
Press and release the HFL Talk button before a command.

1. Say "**Phonebook.**"
2. Say "**Delete**" after the prompts.
3. Say the name you want to delete and follow the HFL prompts to complete the deletion.

***To list all names in the phonebook:***
Press and release the HFL Talk button before a commands.

1. Say "**Phonebook.**"
2. Say "**List**" after the prompts.
3. HFL begins reading the names in the order they were stored.
4. If you hear a name you want to call, immediately press the HFL Talk button and say "**Call.**"



*CONTINUED*

***To store a specific phone number from your cell phone directly to the HFL phonebook (available on some phones):***
Press and release the HFL Talk button before a command.

1. Say "**Phonebook.**"
2. Say "**Receive contact**" after the prompts.
3. Follow the HFL prompts, select a number from your cell phone, and send it to HFL.
4. Follow the HFL prompts and name the number, or say "**Discard**" if it is not the number you want to store.
5. Follow the HFL prompts if you want to store another number.

**System Setup**
This command group allows you to change or customize HFL basic settings.

***To set a 4-digit passcode to lock the HFL system for security purposes:***
Press and release the HFL Talk button before a command.

1. Say "**System setup.**"
2. Say "**Security**" after the prompts.
3. Follow the HFL prompts and say the 4-digit passcode you want to set.
4. Follow the HFL prompts to confirm the number.

**NOTE:** Once a passcode is set, you will need to enter it to use HFL each time you start the vehicle. If you forget the code, your dealer will have to reset it for you, or you will have to clear the entire system (see page 414).

***To change your security pass code:***
Press and release the HFL Talk button before a command.

1. Say "**System setup.**"
2. Say "**Change passcode**" after the prompts.
3. Follow the HFL prompts and say the new 4-digit passcode.
4. Follow the HFL prompts to confirm the number.

***To select either a ring tone or a prompts as the incoming call notification*:***
Press and release the HFL Talk button before a command.

1. Say "**System setup.**"
2. Say "**Call notification**" after the prompts.
3. Follow the HFL prompts and say "**Ring tone**" or "**Prompt.**" You can also say "**Off**" for no audible incoming call notification.

*: The default setting is a ring tone.

***To activate or deactivate the auto transfer function:***
If you get into the vehicle while you are on the phone, the call can be automatically transferred to HFL with the ignition switch in the ACCESSORY (I) or ON (II) position.

Press and release the HFL Talk button before a command.

1. Say "**System setup.**"
2. Say "**Auto transfer**" after the prompts.
3. HFL will let you know if auto transfer is on or off, depending on the previous setting. Follow the HFL prompts to change the setting.



*CONTINUED*

***To clear the system:***
This operation clears the passcodes, paired phones and all names in the HFL phonebook.

Press and release the HFL Talk button before a command.

1. Say "**System setup.**"
2. Say "**Clear**" after the prompts.
3. Follow the HFL prompts to continue to complete the clearing procedure.

You can also clear the system when you have forgotten the passcode and cannot access HFL. When HFL asks you for the passcode, say "**System clear.**" Paired phones and all names in the HFL phonebook will be lost.

## Quick Language Selection

*Canadian models only*

***To quickly change the language:***
Press and release the HFL Talk button before a command.

1. Say the language you want to change to in that language.
2. Follow the HFL prompts.

## Change Language

*Canadian models only*

***To change the system language between English and French:***
Press and release the HFL Talk button before a command.

1. Say "**Change language.**"
2. Follow the HFL prompts to change the language to English or French.

If you have not named your paired phone in the language you just selected, HFL will ask you to name it in the current language.

When French is your currently selected language, you can give voice commands in French.

### *Bluetooth*® Wireless Technology

The *Bluetooth*® name and logos are registered trademarks owned by Bluetooth SIG, Inc. and any use of such marks by Honda Motor CO., Ltd. is under license. Other trademarks and trade names are those of their respective owners.

### HFL Limitations

An incoming call on HFL will interrupt *Bluetooth*® Audio when it is playing. Audio will resume when the call is ended.

*As required by the FCC:*
*This device complies with Part 15 of the FCC rules. Operation is subject to the following two conditions: (1) This device may not cause harmful interference, and (2) this device must accept any interference received, including interference that may cause undesired operation.*

*Changes or modifications not expressly approved by the party responsible for compliance could void the user's authority to operate the equipment.*

*This device complies with Industry Canada Standard RSS-210.*
*Operation is subject to the following two conditions: (1) this device may not cause interference, and (2) this device must accept any interference that may cause undesired operation of the device.*

*Bluetooth*® HandsFreeLink® (HFL) allows you to place and receive phone calls using either the navigation system controls or voice commands without the distraction of handling your cell phone.

To use HFL, you need a Bluetooth-compatible cell phone. For a list of compatible phones, pairing procedures, and special feature capabilities:

In the U.S., visit *www.acura.com/handsfreelink*, or call (888) 528-7826.

In Canada, visit *www.acura.ca*, or call (888) 9-ACURA-9.

## Using HFL

### *Interface Dial*

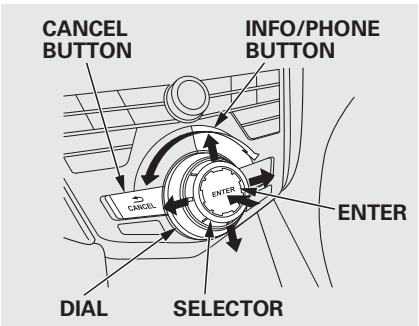


Use the Interface Dial to make menu or list selections.

To select an item on the screen, turn the selector knob left or right to highlight it, and then press ENTER.

To select an item that comes with ▲ ▼, ◀, or ▶ icons, push the knob up, down, left, or right.

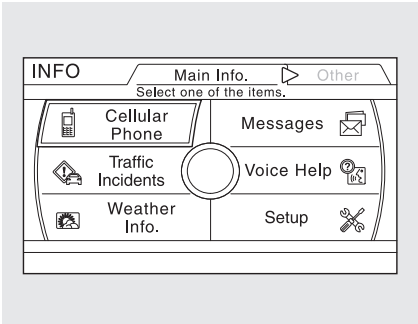


Press the INFO/PHONE button to go to the main information screen.

Select Cellular Phone from the menu and press ENTER.

Press the CANCEL button to go back to the previous screen.

To quickly access the Cellular Phone screen, press the Pick-Up button on the steering wheel.

### *HFL Buttons*

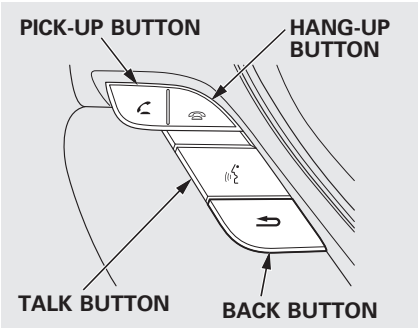


**PICK-UP Button** – Press and release to answer a call, or press to go directly to the Cellular Phone screen.

**HANG-UP Button** – Press and release to end or decline a call.

**TALK Button** – Press and release to give a command.

**Back Button** – Press and release to go back to the previous command, or cancel the command.

### *Voice Control Tips*

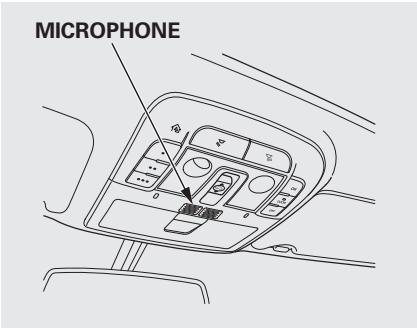


- Air or wind noise from the dashboard and side vents or all windows may interfere with the microphone. Adjust or close them as necessary.
- Press and release the Talk button each time you want to make a command. After the beep, speak in a clear, natural tone.
- Try to reduce all background noise. If the microphone picks up voices other than yours, commands may be misinterpreted.
- To change the volume level of HFL, use the audio system volume knob or the steering wheel volume controls.

### *Help Features*

For help at any time, including a list of available options, say "**Help.**"

### *Language*

Refer to the navigation system manual for how to change the system's language between English, French, and Spanish.

*CONTINUED*

***Display***

When you receive an incoming call, you will see the following displays and notifications.

You will see “HANDSFREELINK” on the audio display while HFL is in use.

On the navigation screen:

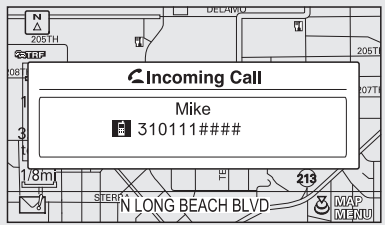


U.S. model is shown.

On the Cellular Phone screen:

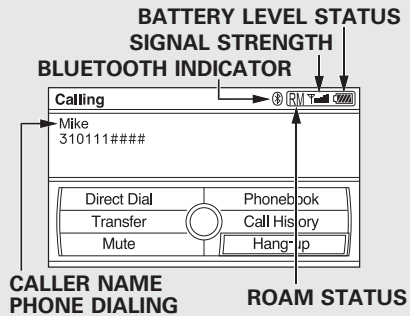


Some phones may send battery, signal strength, and roaming status information to the screen.

## How to Use HFL

**The power mode must be in ACCESSORY or ON (see page 194).**

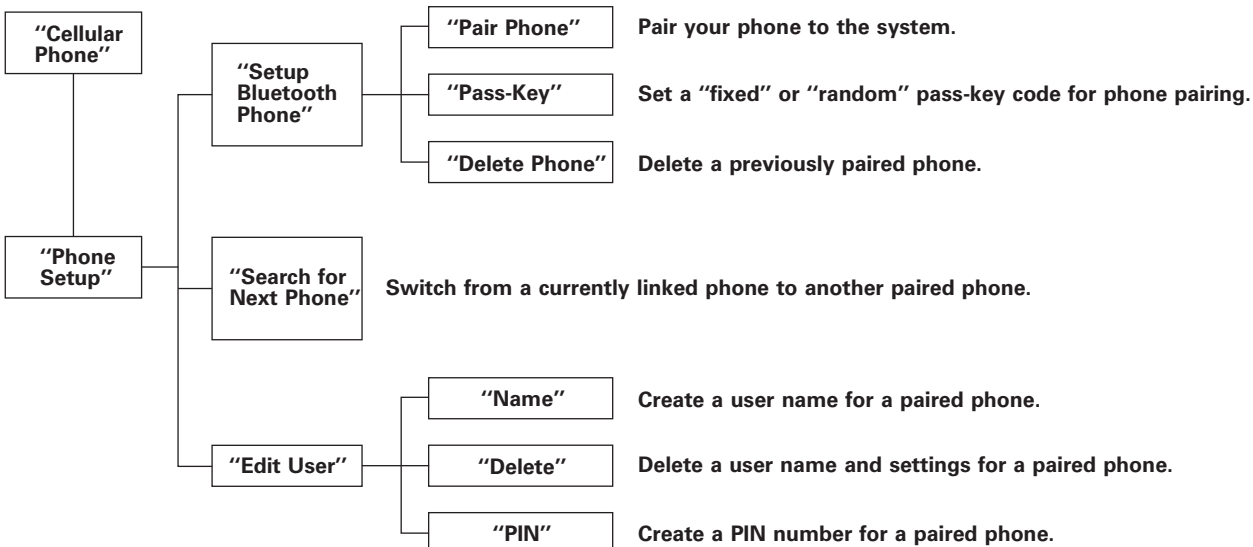


*Voice commands can be used for all above options. Voice commands for the HFL system can only be used from the Cellular Phone screen. To quickly access the Cellular Phone screen, press the Pick-Up button on the steering wheel. Press and release the Talk button each time you give a command.*

*CONTINUED*

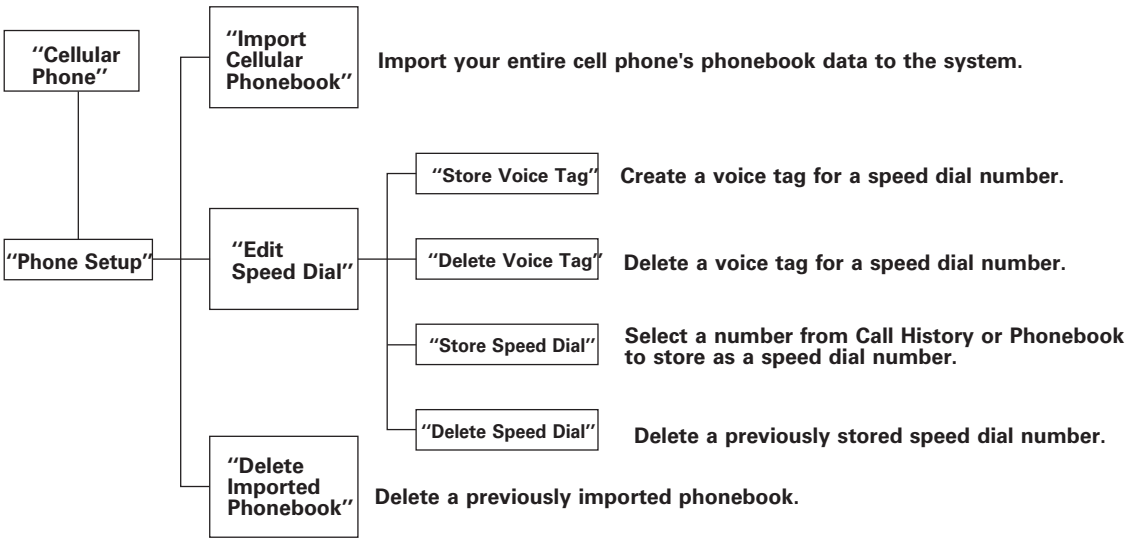


*Voice commands can be used for all above options. Voice commands for the HFL system can only be used from the Cellular Phone screen. To quickly access the Cellular Phone screen, press the Pick-Up button on the steering wheel. Press and release the Talk button each time you give a command.*

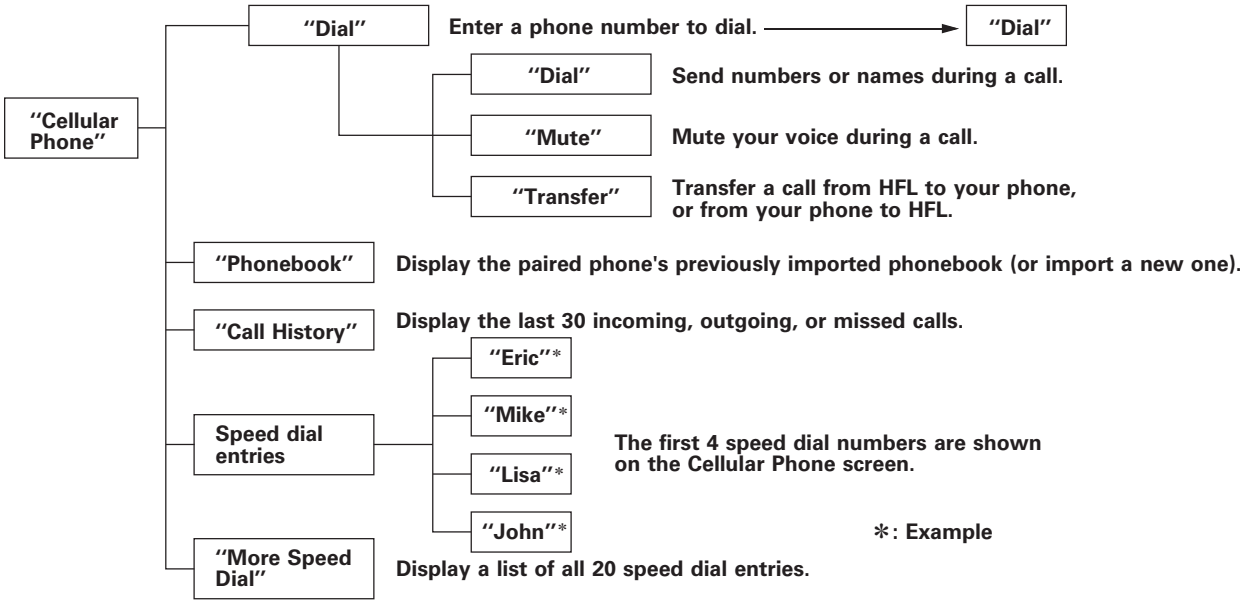


*Voice commands can be used for all above options. Voice commands for the HFL system can only be used from the Cellular Phone screen. To quickly access the Cellular Phone screen, press the Pick-Up button on the steering wheel. Press and release the Talk button each time you give a command.*

*CONTINUED*

To Use HFL, you need to pair your Bluetooth-compatible cell phone to the system.

HFL uses a Class 2 Bluetooth, which means the maximum range between your phone and vehicle is 30 feet (10 meters).

## Cellular Phone

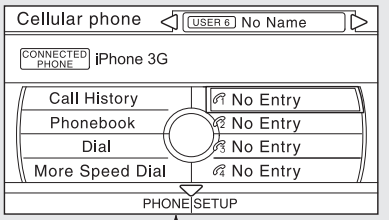


Press the PICK-UP button to go directly to the Cellular Phone screen.

## Phone Setup

This menu group is for phone pairing, and user, phonebook, and speed dial editing.

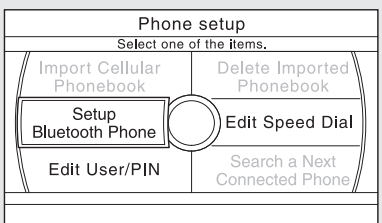


Select “PHONE SETUP” from the Cellular Phone screen.

### *Setup Bluetooth Phone*

*To pair a cell phone:*

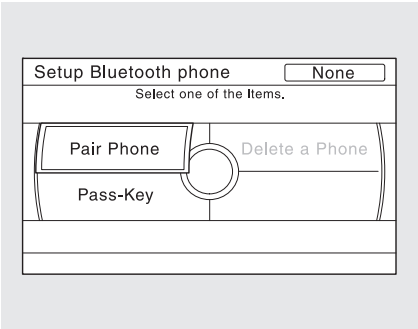


1. Select “Setup Bluetooth Phone” from the Phone Setup screen.
2. Select “Pair Phone.”
3. HFL gives you a 4-digit pass-key that you will need to input on your phone.

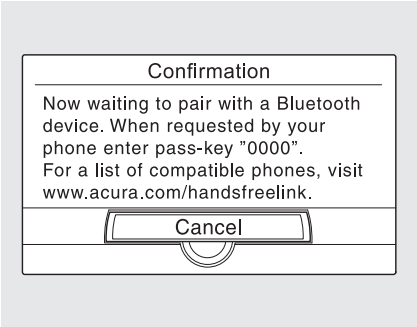


4. Put your cell phone in “Discovery” or “Search” mode, and search for a Bluetooth device.
5. When your phone prompts you, input the 4-digit pass-key.
6. You will receive a notification on the screen and your phone if pairing is successful.

### *Phone pairing tips:*

- You cannot pair your phone while the vehicle is moving.
- Up to six phones can be paired.
- Your phone's battery may drain faster when it is paired to HFL.



*CONTINUED*

*To Change the pass-key setting:*

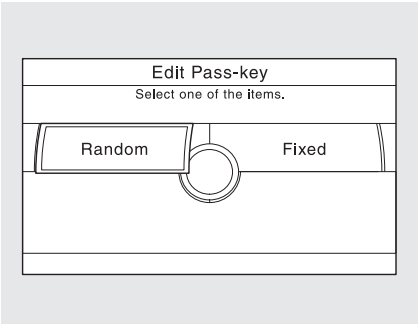


1. Select “Setup Bluetooth Phone” from the Phone Setup screen.
2. Select “Pass-Key.”

**NOTE:** The default pass-key “0000” is used until you change the setting.

For a randomly generated pass-key each time you pair a phone, select “Random.”

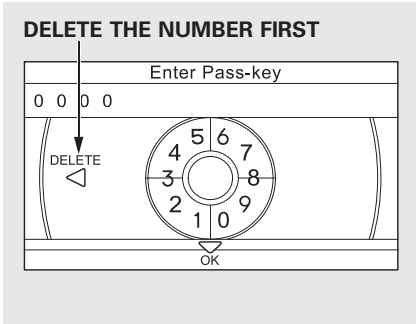


To create your own pass-key, select “Fixed” and follow step 3 and 4.

3. Delete the current pass-key.
4. Enter a new pass-key, and select “OK.”

*To delete a paired phone:*

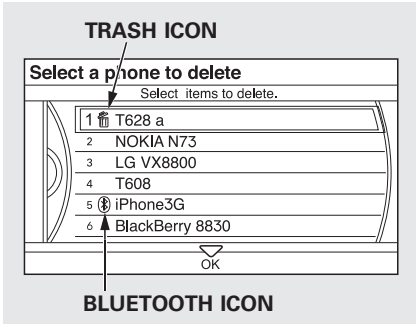


1. Select “Setup Bluetooth Phone” from the Phone Setup screen.
2. Select “Delete a phone.”
3. Select the phone you want to delete. The Bluetooth icon shows you the currently linked phone.
4. A trash icon appears next to the select phone. Select “OK” to continue.

***Search for Next Connected Phone***
To change from the currently linked phone to another paired phone, select "Search a Next Connected Phone" on the Phone Setup screen.

HFL disconnects the linked phone and starts searching for another paired phone.

If no other paired phone is found, HFL will automatically link the previous phone.

***Edit User/PIN***
You can name up to six HFL users. Each can be PIN protected, and have its own phonebook, speed dial, and call history.

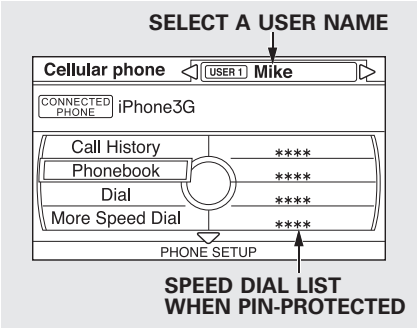


Select the user you want to edit on the Cellular Phone screen.

If the user your selected is PIN-protected, the speed dial list becomes "****."

*To name a user:*

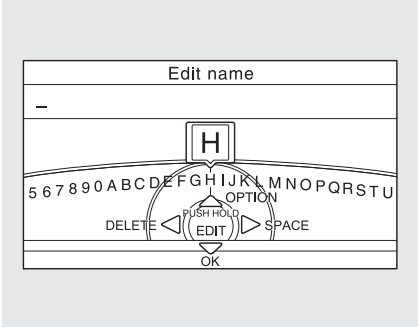


1. Select "Edit User/PIN" from the Phone Setup screen.
2. Select "Name."
3. Enter a user name, and select "OK" when complete.

*CONTINUED*

*To create a PIN for each user:*
When you set a PIN for a user, you will be asked to enter the PIN every time you select the user on the Cellular Phone screen.

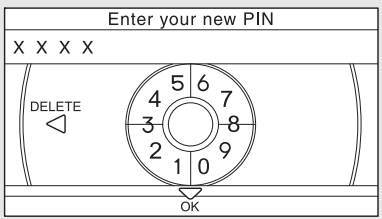


1. Select “Edit User/PIN” from the Phone Setup screen.
2. Select “PIN.”
3. Enter a 4-digit PIN, re-enter it, and select “OK.”

If you select “DO NOT USE PIN” before entering any number, the user will not have a PIN.

If the user is already PIN-protected, you need to enter the current PIN before creating a new one.

*To delete a user:*
Deleting a user will delete all setting, such as call history and phonebook.

1. Select “Edit User/PIN” from the Phone Setup screen.
2. Select “Delete.”
3. Follow the prompts to complete the deletion.

### *Import Cellular Phonebook*
*(available on some phones)*

The entire phonebook data (up to 10,000 numbers for 1,000 names) of the cell phone that is linked to HFL can be imported to the system.

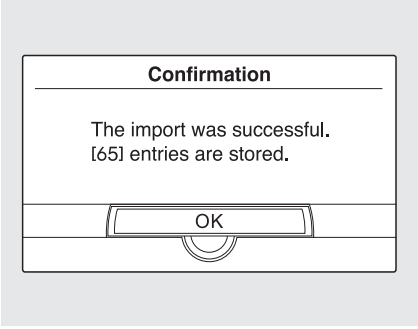


1. Select “Import Cellular Phonebook” from the Phone Setup screen.
2. HFL begins importing the phonebook. Select “OK” after the import is completed.

Up to three category icons appear next to the phonebook entries*.

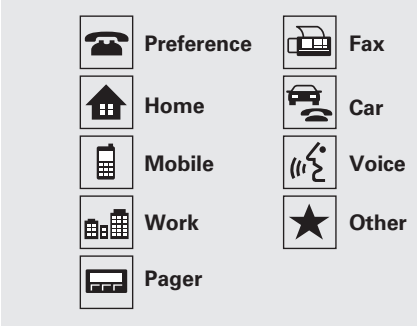


These indicate how many numbers are stored for the name. If a name has more than three category icons, “....” is displayed.

*: Available on some phones.

### *Edit Speed Dial*

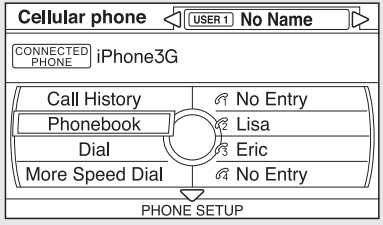


**The first four speed dial entries**

Up to 20 speed dial numbers can be stored per user, and the first four numbers are displayed on the Cellular Phone screen.

Select a “No Entry” field to store a speed dial entry, or use the following procedure.

*CONTINUED*

*To store a speed dial number:*

1. Select “Edit Speed Dial” from the Phone Setup screen.
2. Select “Register Speed Dial.”
3. Select a number on the speed dial list where you want to store the number.

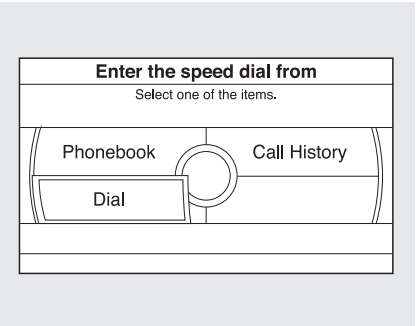


4. Choose a number from:

   Phonebook – the linked cell phone's imported phonebook.

   Call History – the last 30 numbers

   Dial – manual number input
5. When the speed dial number is successfully stored, you are asked to store a voice tag for the number. Follow the prompts.

When a voice tag is stored for the entry, you can dial the number by saying “Call” and the voice tag name.

*To add a voice tag to stored speed dial number:*

1. Select “Edit Speed Dial” from the Phone Setup screen.
2. Select “Register Voice Tag.”
3. Select the number you want to store a voice tag for.

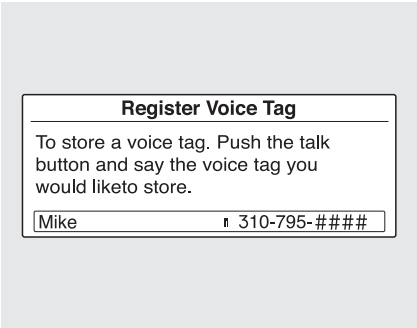


4. Follow the prompts to complete the voice tag.

**NOTE:**

– Avoid using duplicate voice tag.

– Avoid using “home” as a voice tag.

– It is easier for HFL to recognize a longer name. For example, use “John Smith” instead of “John.”

*To delete a voice tag:*

1. Select “Edit Speed Dial” from the Phone Setup screen.
2. Select “Delete Voice Tag.”
3. Select the number you want to delete the voice tag for, and select “OK.”



*CONTINUED*

*To delete a speed dial number:*

1. Select “Edit Speed Dial” from the Phone Setup screen.
2. Select “Delete Speed Dial.”
3. Select the number you want to delete, and select “OK.”

***Delete Imported Phonebook***

This option deletes the entire phonebook of the currently linked cell phone. Follow the confirmation and notification screens.

## Making a Call

You can make calls by using the imported phonebook, inputting any phone number, using the call history, or with speed dial entries.

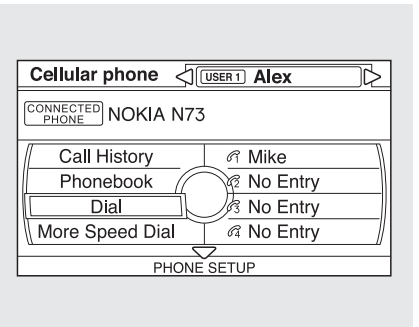


During a call, HFL allows you to talk up to 30 minutes after you remove the key from the ignition switch. However, this may weaken the vehicle's battery.

*To make a call using a name in the Phone Book:*

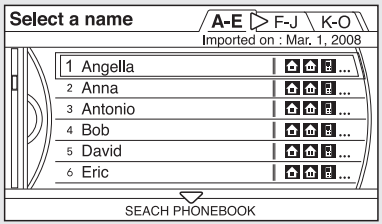


1. Select “Phonebook” from the Cellular Phone screen.

If a phonebook has not yet been imported, the system will attempt to import one first.

2. Select a name from the list. You can also select “Search Phonebook” and enter the first few letters of the name.
3. Push ENTER to begin automatic dialing.

*To make a call using a phone number:*

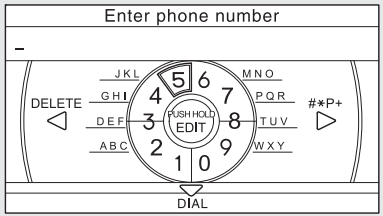


1. Select “Dial” from the Cellular Phone screen.
2. Enter the phone number, and select “Dial.”

To enter the phone number by voice, say it in a continuous string.

*CONTINUED*

*To make a call using Call History:*

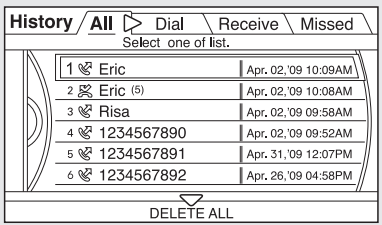


1. Select "Call History" from the Cellular Phone screen.
2. Call History is sorted by "All," "Dial," "Receive, " and "Missed." Selecting a number begins automatic dialing.

*To make a call using Speed Dial:*

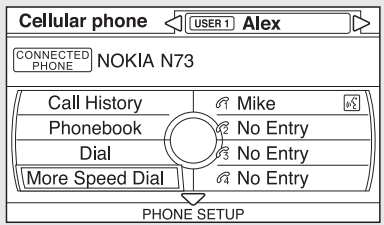


Select one of the four entries on the Cellular Phone screen, and push ENTER to begin automatic dialing.

*To make call using More Speed Dial:*

1. Select "More Speed Dial" on the Cellular Phone screen.
2. A list of up to 20 stored speed dial entries is shown. Select the entry you want to call, and push ENTER to begin automatic dialing.

**NOTE:** Any voice-tagged speed dial entry can be dialed by voice from the Cellular Phone screen.

**Receiving a Call**

When you receive a call, a notification appears on the screen (see page 418).

To answer the call, press the PICK-UP button on the steering wheel.

To end or decline the call, press the HANG-UP button.

**During a Call**

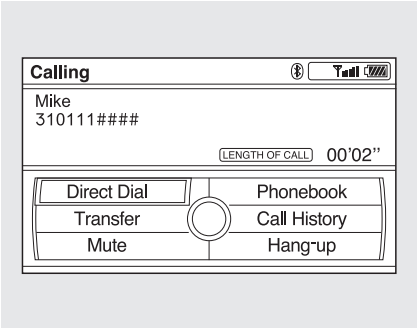


The following options are available during a call:

***Direct Dial**** – Allows you to send numbers or names during a call. This is useful when you call a menu-driven phone system.

***Transfer*** – Allows you to transfer a call from HFL to your phone, or from your phone to HFL.

***Mute*** – Allows you to mute your voice.

*: Available on some phones.



*CONTINUED*

### *Call Waiting*

If your phone has Call Waiting, press and release the PICK-UP button to put the original call on hold and answer the incoming call.

To return to the original call, press the PICK-UP button again. If you don't want to answer the incoming call, disregard it and continue with your original call. If you want to hang up the original call and answer the new call, press the HANG-UP button.

### *Bluetooth*® Wireless Technology

The Bluetooth® name and logos are registered trademarks owned by Bluetooth SIG, Inc. and any use of such marks by Honda Motor CO., Ltd. is under license. Other trademarks and trade names are those of their respective owners.

*As required by the FCC:*
*This device complies with Part 15 of the FCC rules. Operation is subject to the following two conditions: (1) This device may not cause harmful interference, and (2) this device must accept any interference received, including interference that may cause undesired operation.*

*Changes or modifications not expressly approved by the party responsible for compliance could void the user's authority to operate the equipment.*

*This device complies with Industry Canada Standard RSS-210.*
*Operation is subject to the following two conditions: (1) this device may not cause interference, and (2) this device must accept any interference that may cause undesired operation of the device.*

*On models with navigation system*
AcuraLink enhances your ownership experience by providing a direct communication link between your vehicle and the Acura Server. Working through the XM radio satellite, AcuraLink works in conjunction with the navigation system, *Bluetooth*® HandsFreeLink® (HFL), and audio system in your vehicle. It displays and receives several kinds of messages, including:

- Operating tips and information on your vehicle's features.
- Important recall and safety information.
- Maintenance information to keep your vehicle in top condition.
- Diagnostic information to provide information about any problems with your vehicle.

**Interface Dial**
Most AcuraLink functions are controlled by the interface dial. The interface dial has two parts, a knob and a selector.

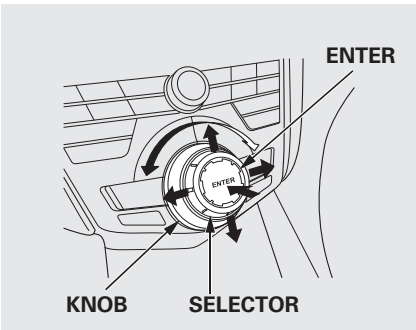


The knob turns left and right. Use it to make selections or adjustments to a list or menu on the screen.

The selector can be pushed left, right, up, down, and in. Use the selector to scroll through lists, to select menus, and to highlight menu items. When you make a selection, push the center of the selector (ENTER) to go to that selection.



*CONTINUED*

**Reading Messages**
If you have new messages, an envelope icon appears in the lower left hand part of the navigation screen.

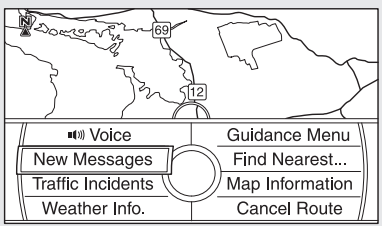


To open a message:
Press ENTER on the interface selector, then select New Message from the navigation system map menu.

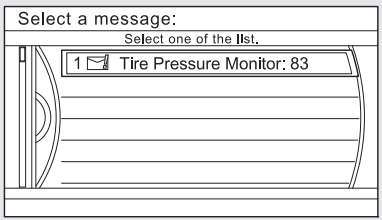


A list of all messages will be shown. New Messages will be at the top. Select the message you want to read by pressing ENTER.

A red exclamation will be marked on an envelope icon with an important message.

To view previously read messages:

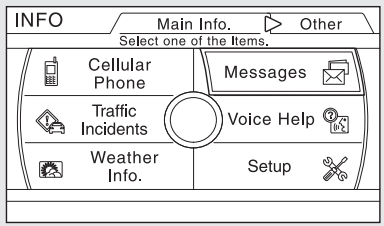


Press the INFO button. The information screen will be shown.

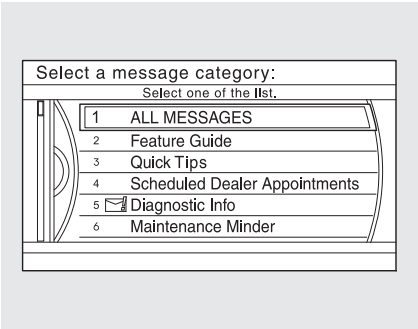


Select “Messages”, then select a message category by pressing ENTER. Select the message you want to read and press ENTER.

Unread messages have a closed envelope icon next to them. The icon disappears when it has already been read.

**NOTE:** Only Diagnostic Info messages appear on the navigation screen while driving. They indicate if your vehicle has a problem that may need immediate attention (see page 446).

After purchasing your vehicle, messages may not appear immediately.
Your dealer has to register the vehicle identification before you can receive messages. This can take several days to process.

## Message Options

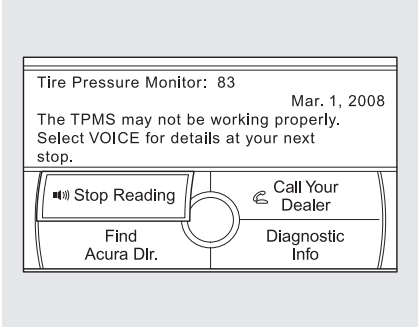


When you open a message, you can read a summary of it, and then choose one of several options. If an option is not available for a message, that button will not be highlighted.

*CONTINUED*

**Delete** – Select this option to delete the current message.

**Voice** – Select this option to hear a voice read the entire message. This gives you more information than the screen can display at one time. When you select the Voice option, it changes to a Stop Reading option. Select the option again to stop the voice.

**Call** – Select this option to call a phone number embedded in the message. When you select **Call,** the *Bluetooth*®HandsFreeLink® (HFL) dials the number for you.

To make a call, your *Bluetooth*®compatible phone must be paired to the vehicle's HandsFreeLink system, powered on, and located within the vehicle (see page 423).

**Find Acura Dlr.** – Select this option to find the nearest Acura dealer using the navigation system.

**Call Your Dealer** – Select this option to call the Acura dealer you purchased your vehicle from. AcuraLink also directs you to this dealer so you can schedule a maintenance appointment or receive information about a message. If your assigned servicing dealer changes, AcuraLink will reset to call that dealer.

**Diagnostic Info** – Select this option to get more information about the current diagnostic message. To use this option, your cellphone must be paired with the HFL. In addition, the paired phone must have a compatible data service and be set up with the AcuraLink system to make a data connection. Access the handsfreelink.com website to find out which data services are currently compatible with AcuraLink.

**Message Preferences**

To set your AcuraLink preferences (the types of messages you want to receive, if any), visit the My Acura website at *www.owners.acura.com,* and choose what you would like to receive. If you do not have internet access, call Acura Client Services at (800) 382-2238; they can set your message preferences for you.

**Deleting Messages**

**NOTE:** Diagnostic info and recall/campaign messages can only be deleted by your dealer.

To delete a single message:

- Press the INFO/PHONE button to bring up the Information screen.
- Scroll to the Messages option, then select it by pressing ENTER on the interface selector.
- Select the message category that contains the message you want to delete.
- Use the interface knob to scroll up or down to the message title you want to delete, and select it by pressing ENTER on the interface selector.
- Scroll to Delete with the interface knob, and select it by pressing ENTER on the interface selector.

To delete all messages:

**NOTE:** The Delete All Messages command does not apply to Diagnostic Info and Recall messages. They can only be deleted by your dealer.

- Press the INFO/PHONE button to view the INFO screen. Select Setup with the interface selector to view the SETUP screen.
- Select Other by pushing the interface selector to the right.
- Use the interface knob to scroll to the AcuraLink/Messages button, and select it by pressing ENTER on the interface selector.
- Scroll to the Delete Messages option, and select it by pressing ENTER on the interface selector.
- Scroll to the category with the messages you want to delete, and select the category by pressing ENTER on the interface selector.



*CONTINUED*

### Message Categories

There are six message categories in AcuraLink: Feature Guide, Quick Tips, Scheduled Dealer Appointments, Diagnostic Info, Maintenance Minder and Recall/ Campaigns. The system can store up to 255 messages.

Message categories can be added, revised, or deleted through broadcast messages from Acura.

### Quick Tips

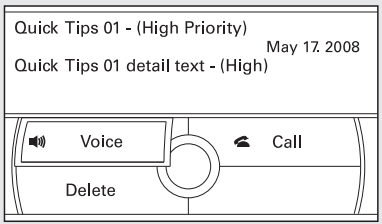


These messages, based on updated vehicle information and comments from other ZDX owners, supplement your Owner's Manual. They provide you with relevant information for a safe and enjoyable ownership experience. For additional information, call Acura Client Services directly through the HFL.

### Feature Guide

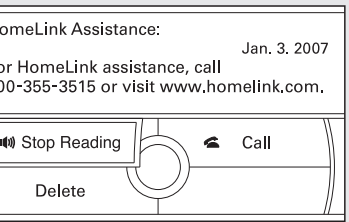


During the first 90 days of ownership, one of up to 17 different messages appears each day. These messages help you to use and understand the features of your vehicle.

## Maintenance Minder

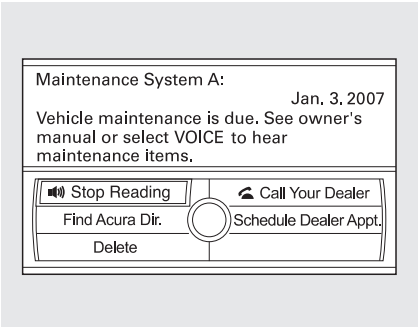


These messages provide detailed information about the service needed for your vehicle. When a maintenance message appears on the multi-information display, a list of needed maintenance items is provided through an AcuraLink message. These messages tell you the exact maintenance needed, helping you to avoid unnecessary maintenance costs.

You can use the following message options:

- Make an appointment from the schedule at the dealer.
- Reschedule the appointment with the dealer.
- Call your dealer for an appointment.
- Find the nearest dealer.

***Automated Appointment***

You can make an appointment with your dealer through the AcuraLink when you receive a maintenance minder message.

To use the automated appointment function, you should visit the My Acura website at *www.owners.acura.com*, register some required settings, and complete the Phone-Data Connection set-up (see page 449). Your *Bluetooth*® compatible phone should also be paired and linked to your vehicle's *Bluetooth*® HFL (see page 423).



*CONTINUED*

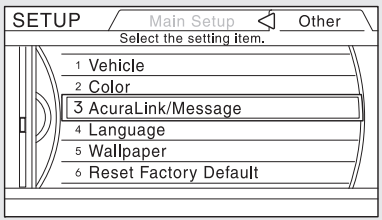


When you see the maintenance minder message on the multi-information display, you will also receive a message in the navigation screen. Select “AcuraLink/ Messages” on the Setup screen, then press ENTER.

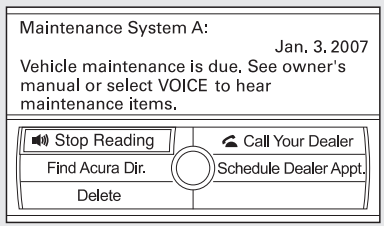


Select the received message, then press ENTER. You will see the message as shown. To make an appointment, select “Schedule Dealer Appt.” then press ENTER.

The system will automatically connect to the Acura server, then show you an appropriate appointment date and time on the navigation screen. If you accept this appointment, select “Confirm Appointment,” then press ENTER.

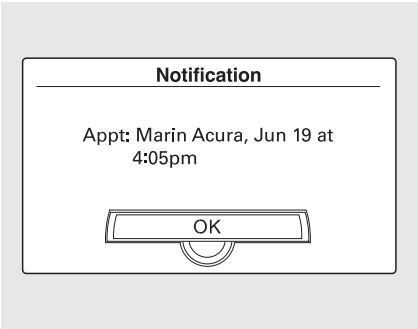


The confirmation message will be displayed on the screen. Make sure to confirm the appointment date, time and dealer. If it is OK, press ENTER.

If you want to change or reschedule the appointment date, select "Cancel," then press ENTER.

## Scheduled Dealer Appointments

***To reschedule the appointment:***

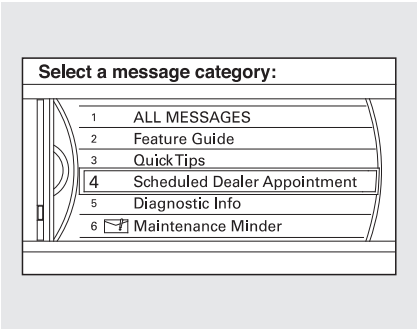


Select "AcuraLink/Messages" on the Setup screen, then press ENTER. Select "Scheduled Dealer Appointments," then press ENTER.

You will see the screen to reschedule as shown. To make an appointment, select "Reschedule Appointment," then press ENTER.

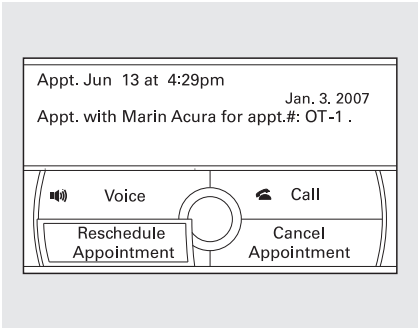


The system will automatically connect to the Acura server, then show you a new appointment date and time on the navigation screen. If you accept this appointment, select "Confirm Appointment," then press ENTER.

*CONTINUED*

***To cancel the appointment:***

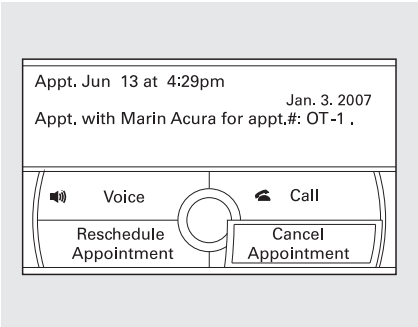


Select “AcuraLink/Messages” on the Setup screen, then press ENTER. Select the appointment message then press ENTER. You will see the screen to cancel as shown. To cancel the appointment, select “Cancel Appointment,” then press ENTER.

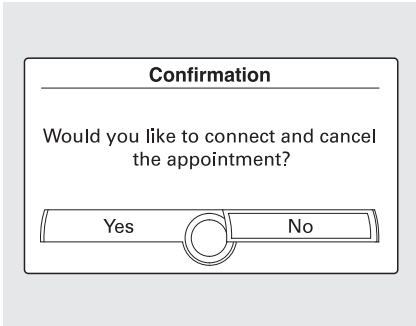


The system will request you to confirm the cancel on the navigation screen. To cancel the appointment, select “YES,” then press ENTER. If you select “NO,” the screen goes back to the previous message display.

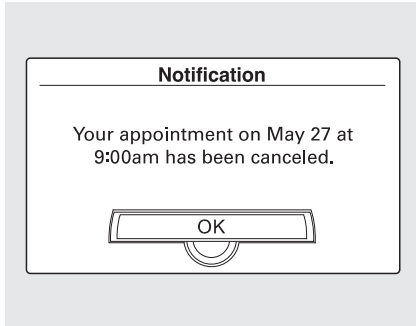


The system will automatically connect to the Acura server, then show you the confirmation on the navigation screen. If you accept the cancel, press ENTER.

If you select the cancel appointment, you cannot try to reschedule the appointment. If you want to change or reschedule the appointment date, call your dealer directly with the HFL.

Using automated appointment, your registered dealer through My Acura is automatically selected. If you want to select another dealer, such as in case of an emergency, find the nearest dealer and call the dealer directly with the HFL.

When a maintenance appointment is due soon, you will also receive an appointment reminder message.

## Recall/Campaigns

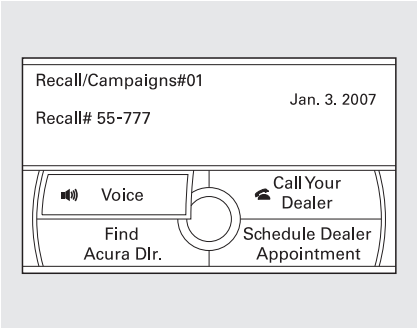


If your vehicle is affected by a recall or other important safety information, a letter will be mailed to you about the issue and how to fix it. If you don't get your vehicle fixed, you will also receive a reminder message through AcuraLink. You can then use the message options to call your dealer for an appointment or to find the nearest dealer.

For this reason, it is important that we retain your current phone number. Please update your information using My Acura at *www.owners.acura.com*.

*CONTINUED*

**Diagnostic Info**
When an indicator comes on or a message is displayed on the Multi-Information Display (MID), AcuraLink can provide information about the cause of the indicator or message and the recommended action to address it. This helps you handle the problem as it occurs, preventing or limiting costly repairs.

The AcuraLink system cannot determine some mechanical problems (such as squeaks or rattles) that are not triggered by the diagnostic indicator monitors.

For more information on the instrument panel indicators, see page 64.

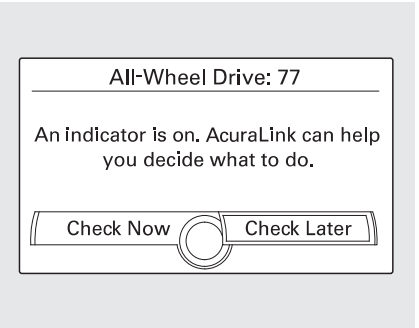


When any indicator comes on or a message is displayed on the MID, AcuraLink immediately notifies you with the message, “An indicator is on. AcuraLink can help you decide what to do.”

If you do not want the information right away, select the Check Later option.

If you want the information now, select the Check Now option. (If the navigation screen is not active, you must select OK from the navigation disclaimer screen before you can check the information.)

Depending on the severity of the problem, the message will let you know if you should see your dealer immediately or if you can wait until a later date.

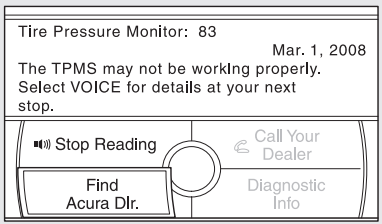


You can then use the message options to call your dealer for an appointment or to find the nearest dealer.

When viewing a diagnostic info message through the INFO menu, you can use the Diagnostic Info button to connect to the Acura server and retrieve the latest information regarding the problem.

**NOTE:** There may not be any additional information, depending on the time elapsed since the previous time you retrieved the information from the Acura server.

## Reminder Message

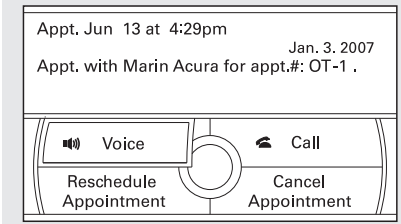


When you make an appointment through My Acura's online Schedule Service Appointment, you can be reminded in advance about that appointment through AcuraLink.

If you need to reschedule or cancel the appointment, see page 443.



*CONTINUED*

Turning the Automated Appointment preference off will disable appointment notifications in the vehicle based on appointments created or changed at My Acura's online scheduling website.

Appointments can still be created, rescheduled, and canceled from the vehicle; however the appointment information stored in the vehicle will not be updated. Any changes to those appointments should be made from the My Acura website.

## AcuraLink/Message Screen

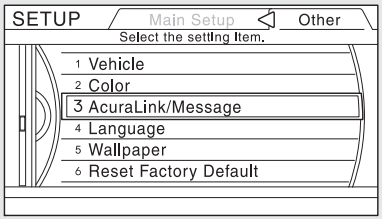


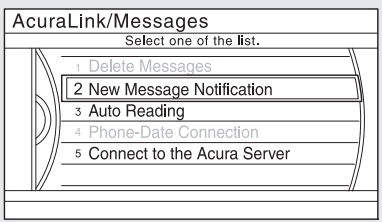


To access the following functions, press the INFO/PHONE button, then bring up the INFO screen. Select Setup with the interface selector to view the SETUP screen. Push the interface selector to the right to select Other, then rotate the interface knob to select AcuraLink/ Messages.

**Delete Messages** – Select this option to delete all stored messages within a category, except for diagnostic info and recall campaign messages. These messages can only be deleted by a certified technician after the recall is done or the problem is corrected, or through a broadcast message from Acura.

**New Message Notification** – Select on if you want to be notified of new messages (envelope icon appears on the navigation screen). Select off if you do not want to be notified of new messages (envelope icon does not appear on the screen). Messages can still be accessed using the INFO menu. If you would like to stop receiving messages, visit the My Acura website at *www.owners.acura.com* to change your messaging preferences.

**Auto Reading** – Select on to have the system automatically read each message to you. Select off to manually select the Voice option when you want a message read to you.

**Phone-Data Connection** – Select this option to begin the process required to connect to Acura. This is used to access the most recent diagnostic information when a problem occurs.

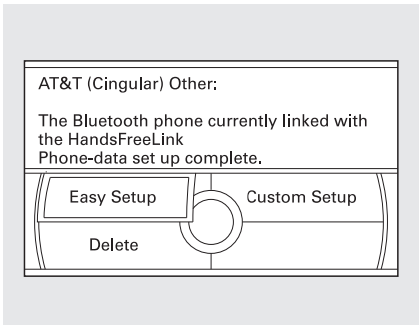


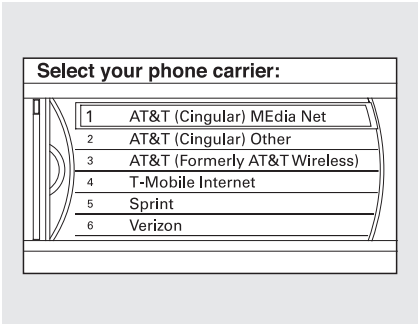


**NOTE:** For the Phone Data Connection button to be active, you need a *Bluetooth*® compatible and enabled cell phone paired to the *Bluetooth*® HandsFreeLink® (HFL). To complete the data connection setup, the paired phone must have a compatible data service.

*CONTINUED*

To find more information on *Bluetooth*® compatible and enabled cell phones, visit *www.acura.com/handsfreelink* or call the Hands Free Link® consumer support at (888) 528-7876.

**Connect to the Acura Server** – The default setting is Prompt. When a diagnostic info message appears, and you select the Check Now option, the system will prompt you before connecting to the Acura server. If you do not wish to connect at that time, select No at the Prompt, and you will see the information from the onboard database. The "Auto" setting will remove the prompt when you select the Check Now option and will automatically connect to the Acura server. This setting only applies when you have a *Bluetooth*® enabled phone that is paired with the HFL and you have completed the Phone-Data Connection setup.

*As required by the FCC:*
*This device complies with Part 15 of the FCC rules. Operation is subject to the following two conditions: (1) This device may not cause harmful interference, and (2) this device must accept any interference received, including interference that may cause undesired operation.*

*Changes or modifications not expressly approved by the party responsible for compliance could void the user's authority to operate the equipment.*

*On models with navigation system*
Refer to the navigation system manual for operation of the rearview camera.

*On models without navigation system*

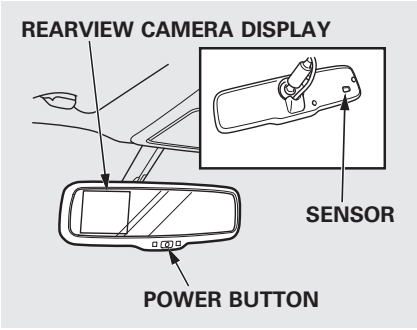


You can turn the camera display on and off by pressing the power button when the shift lever is in reverse. The camera display turns on every time you shift to reverse, even if you turned it off the last time.

Whenever you shift to reverse (R) with the ignition switch in the ON (II) position, the rear view appears on a display in the rearview mirror.

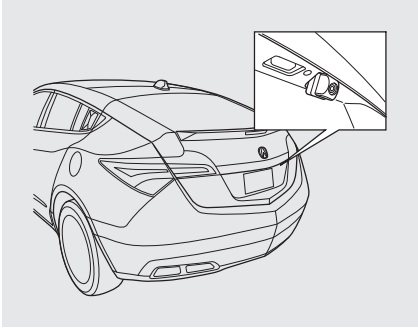

For the best picture, always keep the rearview camera clean, and do not cover the camera lens. To avoid scratching the lens when you clean it, use a moist, soft cloth.

Since the rearview camera display area is limited, you should always back up slowly and carefully, and look behind you for obstacles.

*CONTINUED*

If the engine has just been started, it may take a short time for the system to display the rear view.

The camera display brightness is adjusted automatically by sensors. If you use the camera display continuously at high temperatures, the image will gradually dim.

The inside mirror will be hot when you use the monitor for an extended period of time.

If a bright light (such as sunlight) is reflected on the mirror, the image may be difficult to see.

***Rearview Camera Guide Line***

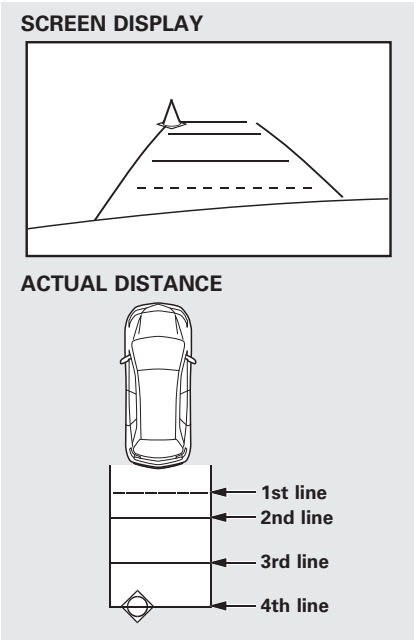


The camera display has parking guide lines that indicate distance from your vehicle.

| | |
|---|---|
| 1st Line | 7.8 in (0.2 m) |
| 2nd Line | 39 in (1 m) |
| 3rd Line | 79 in (2 m) |
| 4th Line | 118 in (3 m) |

**NOTE:**

- The rearview camera has a unique lens that makes objects appear closer than they actually are.
- The rearview camera display has limited coverage, and the size and position of objects may appear different than they actually are. Make sure to check the surrounding area carefully.

To turn off the guide lines, press and hold the power button for more than 3 seconds. The guide lines appear every time you shift to reverse, even if you turned them off the last time.

Before you begin driving your vehicle, you should know what gasoline to use and how to check the levels of important fluids. You also need to know how to properly store cargo or packages. The information in this section will help you. If you plan to add any accessories to your vehicle, please read the information in this section first.


Break-in Period ..... 454
Fuel Recommendation ..... 454
Service Station Procedures ..... 455
Refueling..... 455
Tighten Fuel Cap Message ..... 456
Opening and Closing the Hood..... 457
Oil Check..... 458
Engine Coolant Check ..... 459
Fuel Economy..... 460
Accessories and Modifications ..... 463
Carrying Cargo ..... 465

## Break-in Period

Help assure your vehicle's future reliability and performance by paying extra attention to how you drive during the first 600 miles (1,000 km). During this period:

- Avoid full-throttle starts and rapid acceleration.
- Avoid hard braking for the first 200 miles (300 km).
- Do not change the oil until the multi-information display indicates it is needed.
- Do not tow a trailer.

You should also follow these recommendations with an overhauled or exchanged engine, or when the brakes are replaced.

## Fuel Recommendation

Your vehicle is designed to operate on premium unleaded gasoline with a pump octane of 91 or higher. If this octane grade is unavailable, regular unleaded gasoline with a pump octane of 87 or higher may be used temporarily. The use of regular unleaded gasoline can cause metallic knocking noises in the engine and will result in decreased engine performance. The long-term use of regular-grade gasoline can lead to engine damage.

We recommend quality gasolines containing detergent additives that help prevent fuel system and engine deposits.
In addition, in order to maintain good performance, fuel economy, and emissions control, we strongly recommend, in areas where it is available, the use of gasoline that does NOT contain manganese-based fuel additives such as MMT.

Use of gasoline with these additives may adversely affect performance, and cause the malfunction indicator lamp on your instrument panel to come on. If this happens, contact your dealer for service.

Some gasoline today is blended with oxygenates such as ethanol or MTBE. Your vehicle is designed to operate on oxygenated gasoline containing up to 10% ethanol by volume and up to 15% MTBE by volume. Do not use gasoline containing methanol.

If you notice any undesirable operating symptoms, try another service station or switch to another brand of gasoline.

For further important fuel-related information for your vehicle, or on information on gasoline that does not contain MMT, visit My Acura at *owners.acura.com* In Canada, visit *www.acura.ca* for additional information on gasoline.

## Refueling

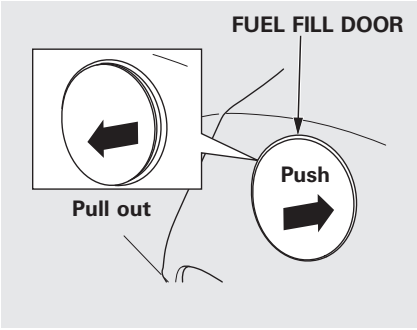


1. Park with the driver's side closest to the service station pump and turn off the engine.
2. Make sure that the driver's door is unlocked. The fuel fill door always locks or unlocks in conjunction with the driver's door.

   The vehicle doors and the fuel fill door will automatically relock if the remote transmitter unlock function is used. In this instance, the security relock function can be deactivated by briefly opening then closing the driver's door.
3. Outside of the vehicle, push on the right side edge of the fuel fill door in the middle. The fuel fill door will pop up slightly. Pull it outward to open it.

**⚠WARNING**

Gasoline is highly flammable and explosive. You can be burned or seriously injured when handling fuel.

- Stop the engine, and keep heat, sparks, and flame away.
- Handle fuel only outdoors.
- Wipe up spills immediately.

*CONTINUED*

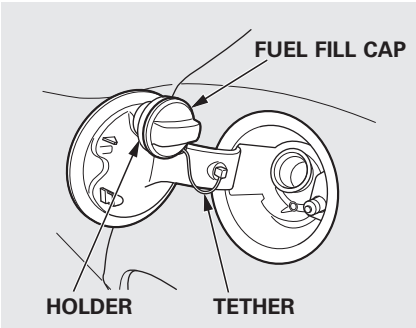


4. Remove the fuel fill cap slowly. You may hear a hissing sound as pressure inside the tank equalizes. Place the cap in the holder on the fuel fill door.
5. Stop filling the tank after the fuel nozzle automatically clicks off. Do not try to “top off” the tank. Leave some room for the fuel to expand with temperature changes.

If the fuel nozzle keeps clicking off even though the tank is not full, there may be a problem with your vehicle's fuel vapor recovery system. The system helps keep fuel vapor from going into the atmosphere. Try filling at another pump. If this does not fix the problem, consult your dealer.

6. Screw the fuel fill cap back on until it clicks at least once. If you do not properly tighten the cap, you will see a “TIGHTEN FUEL CAP” message on the multi-information display (see right column on this page), and the malfunction indicator lamp may also come on (see page 593).
7. Push the fuel fill door closed until it latches.

## Tighten Fuel Cap Message

Your vehicle's on board diagnostic system will detect a loose or missing fuel fill cap as an evaporative system leak. The first time a leak is detected a “TIGHTEN FUEL CAP” message appears on the multi-information display. Turn the engine off, and confirm the fuel fill cap is installed. If it is, loosen it, then retighten it until it clicks at least once.

The message should go off after several days of normal driving once you tighten or replace the fuel fill cap. To scroll to another message, press the INFO button. The “TIGHTEN FUEL CAP” message will appear each time you restart the engine until the system turns the message off.

If the system still detects a leak in the vehicle's evaporative emissions system, the malfunction indicator lamp (MIL) comes on. If the fuel fill cap was not already tightened, turn the engine off, and check or retighten the fuel fill cap until it clicks at least once. The MIL should go off after several days of normal driving once the cap is tightened or replaced. If the MIL does not go off, have your vehicle inspected by a dealer. For more information, see page 593.

## Opening and Closing the Hood

1. Park the vehicle, and set the parking brake. Pull the hood release handle located under the lower left corner of the dashboard. The hood will pop up slightly.

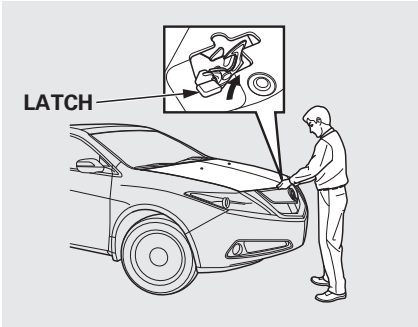


2. Put your fingers under the front edge of the hood near the center. Slide your hand to your left until you feel the hood latch handle. Push this handle up until it releases the hood. Lift up the hood.

If the hood latch handle moves stiffly, or if you can open the hood without lifting the handle, the mechanism should be cleaned and lubricated.

*CONTINUED*

3. Lift the hood up most of the way. The hydraulic supports will lift it up the rest of the way and hold it up.

To close the hood, lower the hood to about a foot (30 cm) above the fender, then press down firmly with your hands. Make sure it is securely latched.

## Oil Check

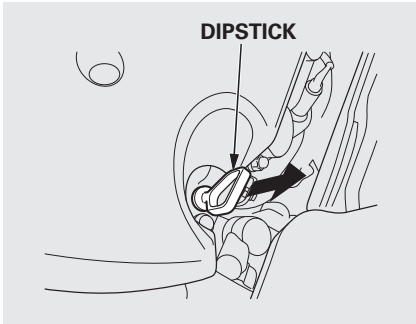


Wait a few minutes after turning the engine off before you check the oil.

1. Remove the dipstick (orange loop).
2. Wipe off the dipstick with a clean cloth or paper towel.
3. Insert the dipstick all the way back into its hole.

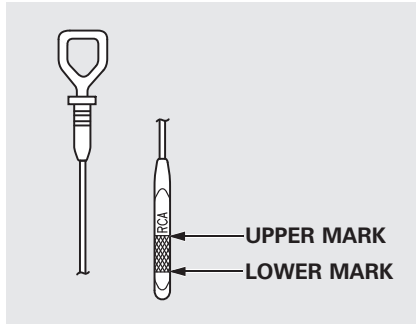


4. Remove the dipstick again, and check the level. It should be between the upper and lower marks.

If it is near or below the lower mark, see **Adding Engine Oil** on page 545.

### Engine Coolant Check

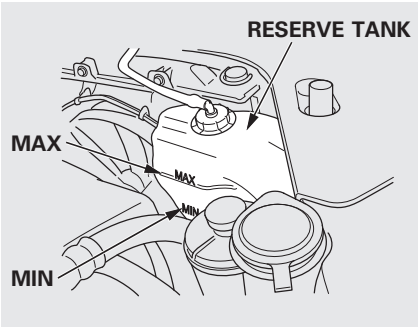


Look at the coolant level in the radiator reserve tank. Make sure it is between the MAX and MIN lines. If it is below the MIN line, see **Adding Engine Coolant** on page 548 for information on adding the proper coolant.

Refer to **Owner's Maintenance Checks** on page 541 for information about checking other items on your vehicle.

**Actual Mileage and EPA Fuel Economy Estimates Comparison.** Fuel economy is not a fixed number. It varies based on driving conditions, driving habits and vehicle condition. Therefore, it is not possible for one set of estimates to predict fuel economy precisely for all drivers in all environments.

The EPA fuel economy estimates shown in the example to the right are a useful tool for comparison when buying a vehicle. EPA estimates include:

**City MPG** – Represents urban driving in a vehicle in light traffic. A range of miles per gallon achieved is also provided.

**Highway MPG** – Represents a mixture of rural and interstate driving, in a warmed-up vehicle, typical of longer trips in free-flowing traffic. A range of miles per gallon achieved is also provided.

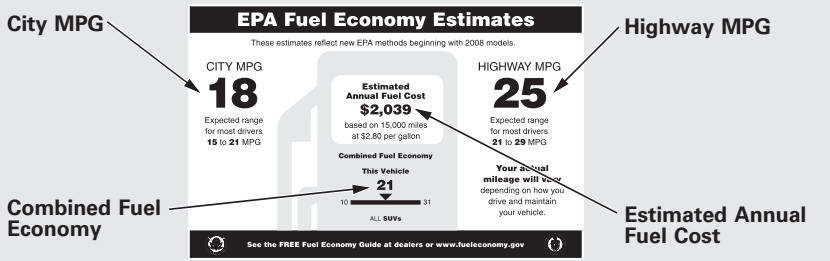


(Sample U.S. EPA label shown)

**Combined Fuel Economy** – Represents a combination of city and highway driving. The scale represents the range of combined fuel economy for other vehicles in the class.

**Estimated Annual Fuel Cost** – Provides an estimated annual fuel cost, based on 15,000 miles (20,000 km) per year multiplied by the cost per gallon (based on EPA fuel cost data) divided by the combined fuel economy.

For more information on fuel economy ratings and factors that affect fuel economy, visit *www.fueleconomy.gov* (Canada: Visit *www.vehicles.gc.ca*)

## Fuel Economy Factors

The following factors can lower your vehicle's fuel economy:

- Aggressive driving (hard acceleration and braking)
- Excessive idling, accelerating and braking in stop-and-go traffic
- Cold engine operation (engines are more efficient when warmed up)
- Driving with a heavy load or the air conditioner running
- Improperly inflated tires

## Improving Fuel Economy

### *Vehicle Maintenance*

A properly maintained vehicle maximizes fuel economy. Poor maintenance can significantly reduce fuel economy. Always maintain your vehicle according to the maintenance messages displayed on the information display (see **Owner's Maintenance Checks** on page 541).

For example:

- **Use the recommended viscosity motor oil, displaying the API Certification Seal (see page 545).**
- **Maintain proper tire inflation** – An under-inflated tire increases "rolling resistance," which reduces fuel economy.
- **Avoid carrying excess weight in your vehicle** – It puts a heavier load on the engine, increasing fuel consumption.
- **Keep your vehicle clean** – In particular, a build-up of snow or mud on your vehicle's underside adds weight and rolling resistance. Frequent cleaning helps your fuel economy.

### *Drive Efficiently*

- **Drive moderately** – Rapid acceleration, abrupt cornering, and hard braking increase fuel consumption.
- **Observe the speed limit** – Aerodynamic drag has a big effect on fuel economy at speeds above 45 mph (75 km/h). Reduce your speed and you reduce the drag. Trailers, car top carriers, roof racks and bike racks are also big contributors to increased drag.
- **Avoid excessive idling** – Idling results in 0 miles per gallon (0 kms per liter).

*CONTINUED*

- **Minimize the use of the air conditioning system** – The A/C puts an extra load on the engine which makes it use more fuel. Use the fresh-air ventilation when possible.
- **Plan and combine trips** – Combine several short trips into one. A warmed-up engine is more fuel efficient than a cold one.

## Calculating Fuel Economy

***Measuring Techniques***

Direct calculation is the recommended source of information about your actual fuel economy. Using frequency of fill-ups or taking fuel gauge readings are NOT accurate measures of fuel economy. Fuel economy may improve over the first several thousand miles (kilometers).

***Checking Your Fuel Economy***

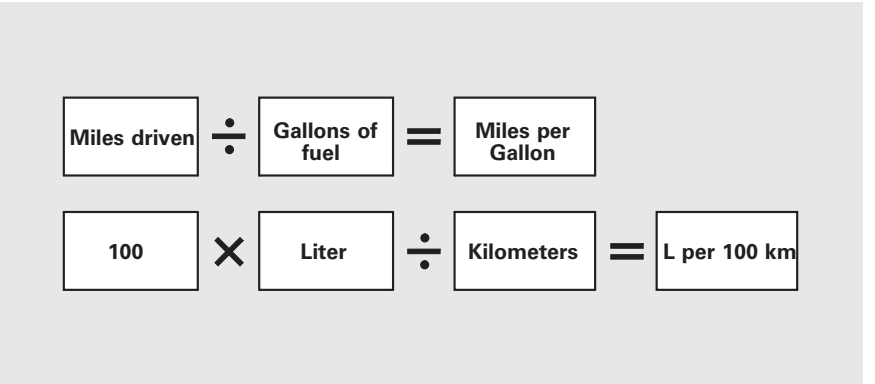


1) Fill the fuel tank until the nozzle automatically clicks off.
2) Reset trip counter to zero.
3) Record the total gallons (liters) needed to refill.
4) Follow one of the simple calculations above.

Modifying your vehicle, or installing some non-Acura accessories, can make your vehicle unsafe. Before you make any modifications or add any accessories, be sure to read the following information.

**Accessories**
Your dealer has Acura accessories that allow you to personalize your vehicle. These accessories have been designed and approved for your vehicle, and are covered by warranty.

Although non-Acura accessories may fit on your vehicle, they may not meet factory specifications, and could adversely affect your vehicle's handling, stability, and reliability.

**⚠ WARNING**

Improper accessories or modifications can affect your vehicle's handling, stability, and performance, and cause a crash in which you can be hurt or killed.

Follow all instructions in this owner's manual regarding accessories and modifications.

When properly installed, cellular phones, alarms, two-way radios, and low-powered audio systems should not interfere with your vehicle's computer controlled systems, such as your airbags, anti-lock brakes, and tire pressure monitoring system.

Before installing any accessory:

- Make sure the accessory does not obscure any lights, or interfere with proper vehicle operation or performance.
- Be sure electronic accessories do not overload electrical circuits (see page 595) or interfere with proper operation of your vehicle.
- Do not install accessories on the side pillars or across the rear windows. Accessories installed in these areas may interfere with proper operation of the side curtain airbags.
- Before installing any electronic accessory, have the installer contact your dealer for assistance. If possible, have your dealer inspect the final installation.

*CONTINUED*

**Modifying Your Vehicle**
Removing parts from your vehicle, or replacing components with non-Acura components could seriously affect your vehicle's handling, stability, and reliability.

Some examples are:

- Lowering your vehicle with a non-Acura suspension kit that significantly reduces ground clearance can allow the undercarriage to hit speed bumps or other raised objects, which could cause the airbags to deploy.
- Raising your vehicle with a non-Acura suspension kit can affect the handling, stability, and reliability.
- Non-Acura wheels, because they are a universal design, can cause excessive stress on suspension components and will not be compatible with the tire pressure monitoring system (TPMS).
- Larger or smaller wheels and tires can interfere with the operation of your vehicle's anti-lock brakes and other systems.

Modifying your steering wheel or any other part of your vehicle's safety features can make the systems ineffective.

If you plan to modify your vehicle, consult your dealer.

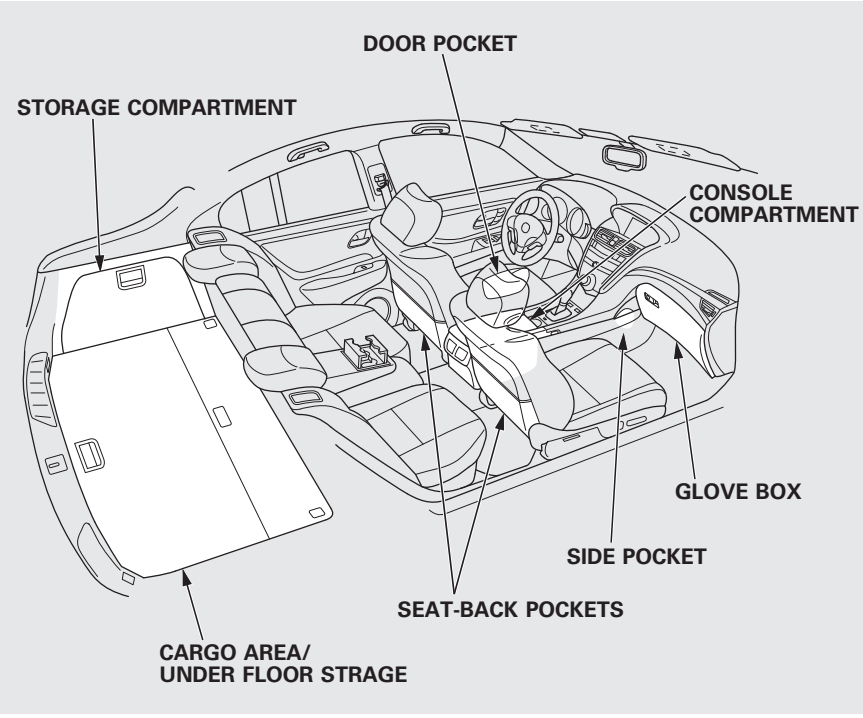


Your vehicle has several convenient storage areas:

- Glove box
- Door and seat-back pockets
- Side pockets
- Cargo area
- Console compartment
- Storage compartments
- Under floor storage

However, carrying too much cargo, or improperly storing it, can affect your vehicle's handling, stability, stopping distance, and tires, and make it unsafe. Before carrying any type of cargo, be sure to read the following pages.

*CONTINUED*

**Load Limits**
The maximum load for your vehicle is 830 lbs (380 kg).

See Tire And Loading Information label attached to the driver's doorjamb.

Label Example

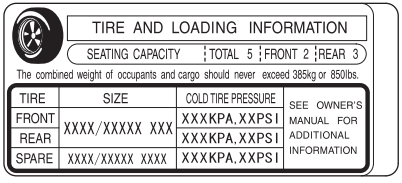
TIRE AND LOADING INFORMATION

SEATING CAPACITY TOTAL 5 FRONT 2 REAR 3

The combined weight of occupants and cargo should never exceed 385kg or 850lbs.

| TIRE | SIZE | COLD TIRE PRESSURE | SEE OWNER'S MANUAL FOR ADDITIONAL INFORMATION |
|---|---|---|---|
| FRONT | XXXX/XXXXX XXX | XXXKPA, XXPSI | |
| REAR | | XXXKPA, XXPSI | |
| SPARE | XXXX/XXXXX XXXX | XXXKPA, XXPSI | |

This figure includes the total weight of all occupants, cargo, and accessories, and the tongue load if you are towing a trailer.

**⚠WARNING**

Overloading or improper loading can affect handling and stability and cause a crash in which you can be hurt or killed.

Follow all load limits and other loading guidelines in this manual.

Steps for Determining Correct Load Limit –

(1) Locate the statement “The combined weight of occupants and cargo should never exceed XXX kg or XXX lbs.” on your vehicle's placard.

(2) Determine the combined weight of the driver and passengers that will be riding in your vehicle.

(3) Subtract the combined weight of the driver and passengers from XXX kg or XXX lbs.

(4) The resulting figure equals the available amount of cargo and luggage load capacity. For example, if the “XXX” amount equals 1,400 lbs. and there will be five 150 lb. passengers in your vehicle, the amount of available cargo and luggage load capacity is 650 lbs.
(1,400 − 750 (5 × 150) = 650 lbs.)

(5) Determine the combined weight of luggage and cargo being loaded on the vehicle. That weight may not safely exceed the available cargo and luggage load capacity calculated in Step 4.

(6) If your vehicle will be towing a trailer, load from your trailer will be transferred to your vehicle. Consult this manual to determine how this reduces the available cargo and luggage load capacity of your vehicle.

| | | | | | |
|---|---|---|---|---|---|
| Example 1 | Max Load (830 lbs) | ≧ | Passenger Weight (150 lbs x 2 = 300 lbs) | + | Cargo Weight (530 lbs) |
| Example 2 | Max Load (830 lbs) | ≧ | Passenger Weight (150 lbs x 4 = 600 lbs) | + | Cargo Weight (230 lbs) |
| Example 3 | Max Load (830 lbs) | ≧ | Passenger Weight (150 lbs x 5 = 750 lbs) | + | Cargo Weight (80 lbs) |

In addition, the total weight of the vehicle, all occupants, accessories, cargo, and trailer tongue load must not exceed the Gross Vehicle Weight Rating (GVWR) or the Gross Axle Weight Rating (GAWR). Both are on a label on the driver's doorjamb.



*CONTINUED*

### Carrying Cargo in the Passenger Compartment

- Store or secure all items that could be thrown around and hurt someone during a crash.
- Be sure items placed on the floor behind the front seats cannot roll underneath and interfere with the proper operation of the seats, the sensors under the seats, or the driver's ability to operate the pedals.

  Also, keep all cargo below the bottom of the windows. If it is higher, it could interfere with the proper operation of the side curtain airbags.
- Keep the glove box closed while driving. If it is open, a passenger could injure their knees during a crash or sudden stop.

### Carrying Cargo in the Cargo Area

- Distribute cargo evenly on the floor of the cargo area, placing the heaviest items on the bottom and as far forward as possible. Tie down items that could be thrown about the vehicle during a crash or sudden stop.
- If you fold down the rear seats, tie down items that could be thrown about the vehicle during a crash or sudden stop.
- If you carry large items that prevent you from closing the tailgate, exhaust gas can enter the passenger area. To avoid the possibility of **carbon monoxide poisoning,** follow the instructions on page 58.
- The cargo area is fitted with loop carpet, similar to home loop carpet.

  If a loop is damaged or pulled, repair it by carefully trimming with scissors to prevent further snagging.

### Optional Separation Net

The separation net can be used to hold back soft, lightweight items stored in the cargo area. Heavy items should be tied down, as the net may not prevent them from being thrown about the vehicle in a crash or a sudden stop.

### Optional Cargo Cover

The cargo cover can be used to cover the cargo area behind the rear seats. When the rear seats are folded down, the cargo cover can be extended over the larger area. Do not install the cover over the larger area if the rear seats are not folded down.

### Cargo Hooks

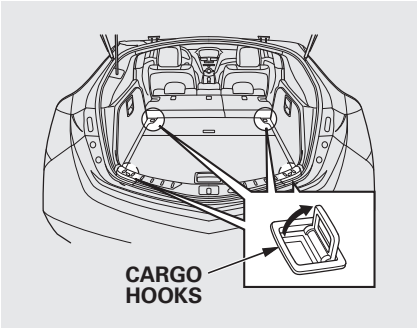


To secure cargo, use the four floor hooks in the cargo area. Make sure all stored items are secured before driving.

The cargo area carpets are loop-type construction. If snags occur from sharp or rough objects, do not pull the loose threads to remove them. Cut all loose threads with a scissors to prevent carpet runs.

This section gives you tips on starting the engine under various conditions, and how to operate the automatic transmission. It also includes important information on parking your vehicle, the braking system, the Super Handling-All Wheel Drive™ (SH-AWD®) system, the vehicle stability assist (VSA®), aka electronic stability control (ESC) system, active damper system (if equipped), the tire pressure monitoring system (TPMS), the collision mitigation braking system™ (CMBS™) (if equipped), the blind spot information system (BSI) (if equipped), and facts you need if you are planning to tow a trailer or drive off-high way.


Driving Guidelines ..... 472
Preparing to Drive ..... 472
Starting the Engine (Models without Keyless Access System) ..... 473
Check Starting System Message ..... 474
Starting the Engine (Models with Keyless Access System) ..... 475
Check Starting System Message ..... 476
Automatic Transmission ..... 477
Driving with the Paddle Shifters ..... 482
Super Handling-All Wheel Drive™ (SH-AWD®) System ..... 487
Parking ..... 489
Tire Pressure Monitoring System (TPMS) ..... 490
Braking System ..... 495
Anti-lock Brakes (ABS) ..... 496
Collision Mitigation Braking System™ (CMBS™) ..... 498
Vehicle Stability Assist (VSA®), aka Electronic Stability Control (ESC), System ..... 508
Blind Spot Information System (BSI) ..... 511
Integrated Dynamics System (IDS) ..... 519
Towing a Trailer ..... 522
Off-Highway Driving Guidelines ..... 528

## Driving Guidelines

Your vehicle has higher ground clearance that allows you to travel over bumps, obstacles, and rough terrain. It also provides good visibility so you can anticipate problems earlier.

Because your vehicle rides higher off the ground, it has a high center of gravity that can cause it to roll over if you make abrupt turns. Utility vehicles have a significantly higher roll over rate than other types of vehicles.

To prevent rollovers or loss of control:

- Take corners at slower speeds than you would with a passenger vehicle.
- Avoid sharp turns and abrupt maneuvers whenever possible.
- Do not modify your vehicle in any way that would raise the center of gravity.
- Do not carry heavy cargo on the roof.

*See page 528 for off-highway driving guidelines.*

## Preparing to Drive

You should do the following checks and adjustments before you drive your vehicle.

1. Make sure all windows, mirrors, and outside lights are clean and unobstructed. Remove frost, snow, or ice.
2. Check that the hood is fully closed.
3. Visually check the tires. If a tire looks low, use a gauge to check its pressure.
4. Check that any items you may be carrying are stored properly or fastened down securely.
5. Check the seat adjustment (see page 161).

6. Check the adjustment of the inside and outside mirrors (see page 177).
7. Check the steering wheel adjustment (see page 145).
8. Make sure the doors and tailgate are securely closed and locked.
9. Fasten your seat belt. Check that your passengers have fastened their seat belts (see page 16).
10. When you start the engine, check the gauges and indicators in the instrument panel, and the messages on the multi-information display (see pages 63, 76 and 90).

**Starting the Engine**

Your vehicle's starting system has an auto control mode. When you turn the ignition switch to the START (III) position, this feature keeps the engine's starter motor running until the engine starts. Follow these instructions to start the engine:

1. Apply the parking brake.
2. In cold weather, turn off all electrical accessories to reduce the drain on the battery.
3. Make sure the shift lever is in Park. Press on the brake pedal.
4. Without touching the accelerator pedal, turn the ignition switch to the START (III) position, then release the ignition switch. You do not need to hold the ignition switch in the START (III) position to start the engine. The starter motor can run for up to 9 seconds to guarantee starting when the outside temperature is very low.

   If you hold the ignition switch in the START (III) position for more than 7 seconds, the starter motor, depending on the outside temperature, runs for up to 25 seconds until the engine starts.

   If the engine does not start, wait at least 10 seconds before trying again.

**NOTICE**

*The immobilizer system protects your vehicle from theft. If an improperly-coded key (or other device) is used, the engine's fuel system is disabled. For more information, see page 149.*

*CONTINUED*

**NOTICE**

*The engine is harder to start in cold weather. Also, the thinner air found at altitudes above 8,000 feet (2,400 meters) adds to this problem.*

### Check Starting System Message

If there is a problem with the starting system, you will see a “CHECK STARTING SYSTEM” message on the multi-information display when the ignition switch is turned to the ON (II) position. You will also see this message when the auto control mode of the starting system has a problem.

If this message is on, the ignition switch has to be held in the START (III) position manually until the engine starts. The ignition switch can be held in that position up to 15 seconds.

Even though you may be able to start the engine manually without the auto control mode of the starting system, have your dealer inspect your vehicle.

Your vehicle's starting system has an auto control mode. When you have your keyless access remote and push the engine start/stop button while depressing the brake pedal, this feature keeps the engine's starter motor running until the engine starts.
Follow these instructions to start the engine:

1. Apply the parking brake.
2. In cold weather, turn off all electrical accessories to reduce the drain on the battery.
3. Make sure the shift lever is in Park. Press on the brake pedal.

In either of the following cases, you should insert the keyless access remote into the keyless remote slot. For more information, see pages 202 and 203.

- The keyless access remote system main switch is off.
- The keyless access remote battery becomes weak or dead.

4. Without touching the accelerator pedal, push and release the engine start/stop button. You do not need to hold the engine start/stop button to start the engine. The starter motor can run for up to 9 seconds to guarantee starting when the outside temperature is very low.

   If you hold the engine start/stop button for more than 7 seconds, the starter motor, depending on the outside temperature, runs for up to 25 seconds until the engine starts.

   If the engine does not start, wait at least 10 seconds before trying again.

**NOTICE**

*The immobilizer system protects your vehicle from theft. If an improperly coded keyless access remote (or other device) is used, the engine's fuel system is disabled. For more information, see page 149.*

**NOTICE**

*The engine is harder to start in cold weather. Also, the thinner air found at altitudes above 8,000 feet (2,400 meters) adds to this problem.*

### Check Starting System Message

If there is a problem with the starting system, you will see a “CHECK STARTING SYSTEM” message on the multi-information display with the power mode ON.

You will also see this message when the auto control mode of the starting system has a problem.

If this message is on, you should press and hold the engine start/stop button until the engine starts. The engine start/stop button can be pressed up to 15 seconds.

Even though you may be able to start the engine manually without the auto control mode of the starting system, have your vehicle inspected by a dealer.

Your vehicle has the engine start/stop button instead of an ignition switch to select the power mode. For more information, see page 194.

### Emergency Engine Start

If you cannot start the engine using the normal engine start procedure, do the following:

1. Set the parking brake.
2. Put the shift lever into Park.
3. Press the engine start/stop button to turn on the ACCESSORY mode.
4. Press and hold the engine start/stop button for about 15 seconds while pressing the brake pedal.

Do not follow this procedure unless it is a case of emergency. Even if you can start the engine using this method, the system may have a malfunction. Contact your dealer as soon as possible.

## Shift Lever Position Indicators

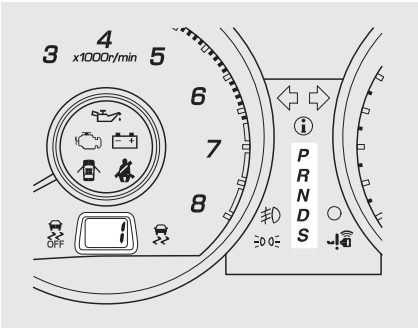


These indicators between the tachometer and speedometer show which position the shift lever is in.

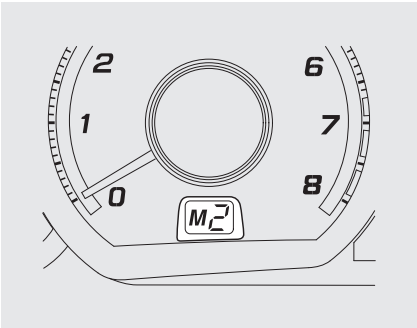


Using a paddle shift mode, the gear position indicator shows you the selected gear number (see page 482).

The “D” indicator comes on for a few seconds when you turn the ignition switch to the ON (II) position. If it flashes while driving (in any shift position), it indicates a possible problem in the transmission.

Models equipped with the keyless access system have an engine start/stop button instead of an ignition switch. ON mode is the equivalent of ON (II). See page 196 for ignition switch and power mode comparison.

If the malfunction indicator lamp comes on along with the “D” indicator, there is a problem with the automatic transmission control system. Avoid rapid acceleration, and have the transmission checked by your dealer as soon as possible.

When the “D” indicator warns of a possible problem with the transmission, you will see a “CHECK TRANSMISSION” message on the multi-information display (see page 91).



*CONTINUED*

## Shifting

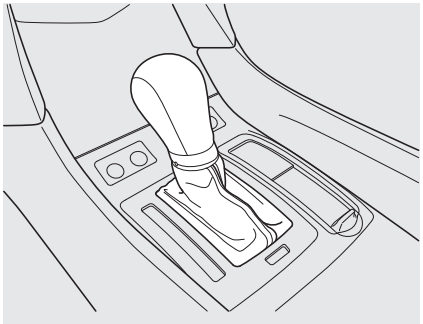

To shift from Park to any position, press firmly on the brake pedal, and press the release button on the front of the shift lever, then move the lever. You cannot shift out of Park when the ignition switch is in the LOCK (0) or ACCESSORY (I) position.

Models equipped with the keyless access system have an engine start/stop button instead of an ignition switch. VEHICLE OFF (LOCK) mode is the equivalent of LOCK (0); and ACCESSORY mode is the equivalent of ACCESSORY (I). See page 196 for ignition switch and power mode comparison.

| To shift from: | Do this: |
|---|---|
| P to R | Press the brake pedal, and press the shift lever release button. |
| R to P<br>N to R<br>D to S | Press the shift lever release button. |
| S to D<br>D to N<br>N to D<br>R to N | Move the shift lever. |

**Park (P)** – This position mechanically locks the transmission. Use Park whenever you are turning off or starting the engine. To shift out of Park, you must press on the brake pedal and press the release button on the shift lever. Make sure your foot is off the accelerator pedal.

If you have done all of the above and still cannot move the lever out of Park, see **Shift Lock Release** on page 480.

You must also press the release button to shift into Park. To avoid transmission damage, come to a complete stop before shifting into Park.

*On models without keyless access system*
The shift lever must be in Park before you can remove the key from the ignition switch.

*On models with keyless access system*
The shift lever must be in Park before you change the power mode from ON to VEHICLE OFF (LOCK).

**Reverse (R)** – Press the brake pedal and press the release button on the front of the shift lever to shift from Park to reverse. To shift from reverse to neutral, come to a complete stop, and then shift. Press the release button before shifting into reverse from neutral.

**Neutral (N)** – Use neutral if you need to restart a stalled engine, or if it is necessary to stop briefly with the engine idling. Shift to the Park position if you need to leave your vehicle for any reason. Press on the brake pedal when you are moving the shift lever from neutral to another gear.

**Drive (D)** – Use this position for your normal driving. The transmission automatically selects a suitable gear (1 through 6) for your speed and acceleration. You may notice the transmission shifting up at higher engine speeds when the engine is cold. This helps the engine warm up faster.



*CONTINUED*

**S position (S)** – To shift into the S position, press the release button on the front of the shift lever, and move the lever to S. This position is similar to D, except only gears from first to fifth are selected. (When shifting up automatically, the vehicle speed is higher than when in the D position.) The S position keeps the transmission from cycling between fourth, fifth, and sixth gears in stop-and-go driving.

With the shift lever in D or S, you can also use the paddle shifters to shift the transmission up or down. With the paddle shifters, you can operate the transmission much like a manual transmission without a clutch pedal. For more information on driving with the paddle shifters, see page 482.

**Engine Speed Limiter**
If you exceed the maximum speed for the gear you are in, the engine speed will enter into the tachometer's red zone. If this occurs, you may feel the engine cut in and out. This is caused by a limiter in the engine's computer controls. The engine will run normally when you reduce the rpm below the red zone.

The engine may cut in and out in R position or depending on the road condition, even when the engine speed is lower than the tachometer's red zone. This is the engine's computer working to protect the transmission.

**Shift Lock Release**
This allows you to move the shift lever out of Park if the normal method of pushing on the brake pedal and pressing the release button does not work.

1. Set the parking brake.
2. *On models without keyless access system*
   Remove the key from the ignition switch.

   *On models with keyless access system*
   Remove the built-in key from the keyless access remote (see page 207).

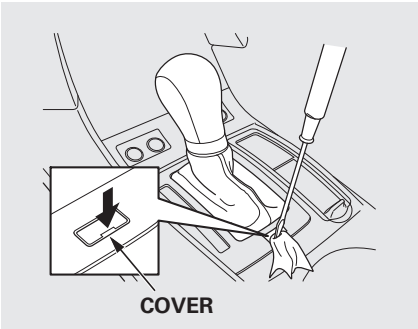


3. Put a cloth on the edge of the shift lock release slot cover to prevent scratches. Use a small flat-tip screwdriver or metal fingernail file to carefully pry up the edge of the cover and remove it from the slot.

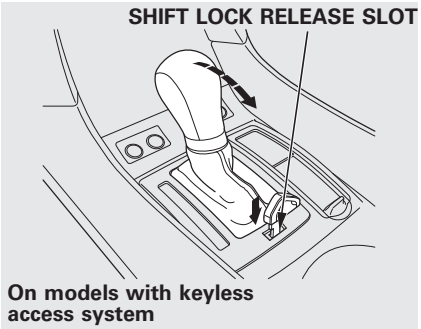


4. Insert a key into the shift lock release slot.
5. Push down on the key or built-in key while you press the release button on the front of the shift lever and move the shift lever out of Park to neutral.
6. Remove the key or built-in key from the shift lock release slot, then reinstall the cover. Make sure the notch on the cover is on the rear side. Press the brake pedal, and restart the engine.

If you need to use the shift lock release, it means your vehicle is developing a problem. Have the vehicle checked by a dealer.

**Using the Paddle Shifters in the D position (D-Paddle Shift Mode)**
When you are driving in the D position, you can shift the transmission up or down manually with the paddle shifters.

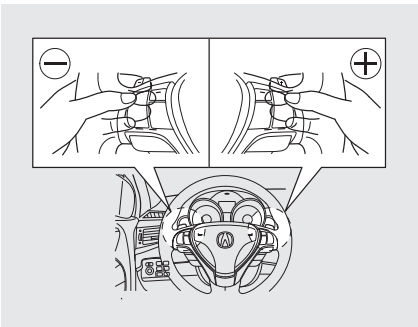

To shift up or down, use the + (right) or − (left) paddle shifter on either side of the steering wheel.

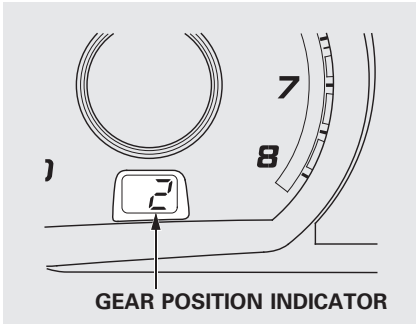


Each time you pull + (right), the transmission shifts to a higher gear. Pull − (left) to downshift. You will see the selected gear number on the instrument panel.

When you pull either paddle shifter, the gear position indicator shows you the selected gear number.

Downshifting with the paddle shifter allows you to increase the engine braking when going down steep or long hills, and provides more power when climbing uphills. You can upshift the transmission manually to reduce the rpm.

The transmission control system monitors the accelerator pedal use and your driving conditions. When you press the accelerator pedal as in normal driving, the system judges that you are driving at a constant cruising speed without using the paddle shifters. Under these conditions, D-paddle shift mode is canceled, and the transmission automatically returns to drive mode (D).

Hold the + paddle shifter for 2 seconds to return to drive mode (D).

When the transmission returns to drive mode (D), the displayed gear number disappears.

The transmission remains in the selected gear if you do not accelerate.

Each time you pull either paddle shifter, the transmission shifts one gear up or down. If you want to shift up or down more than two gears, pull the paddle shifter twice, pause, and then pull it again.

The automatic transmission will not allow you to shift up or down if:

- You downshift before the engine speed reaches the highest threshold of the lower gear.

  If you try to do this, the gear position indicator will flash the number of the lower gear several times, then return to a higher gear.
- You upshift before the engine speed reaches the lowest threshold of the higher gear.
- You pull both paddle shifters at the same time.
- You pull one of the two paddle shifters while another paddle shifter is being pressed.
- You are trying to downshift from second to first with the accelerator pedal off . This will only work when the accelerator pedal is applied deeply.

The transmission downshifts to first gear and returns to drive mode (D) when the vehicle comes to a complete stop or the vehicle speed is about 6 mph (9 km/h).

If there is a problem in the transmission while you are driving with the paddle shifters, the D indicator flashes, the D-paddle shift mode is canceled, and the transmission returns to drive mode (D).

*CONTINUED*

**Using the Paddle Shifters in the S position (Sequential Shift Mode)**
With the shift lever in the S position, you can select the sequential shift mode to shift gears; much like a manual transmission using the paddle shifters, but without a clutch pedal.

Shifting between first and second gears may occur automatically. Downshifting from second to first with the accelerator pedal off is not allowed.

To enter the sequential shift mode, press the release button on the front of the shift lever, move the lever to the S position, then pull either paddle shifter. To cancel the sequential shift mode and return to the ordinary automatic transmission, move the shift lever from S position. When moving the shift lever, be careful not to operate incorrectly. While you are driving in the sequential shift mode, the transmission will not automatically return to ordinary automatic transmission.

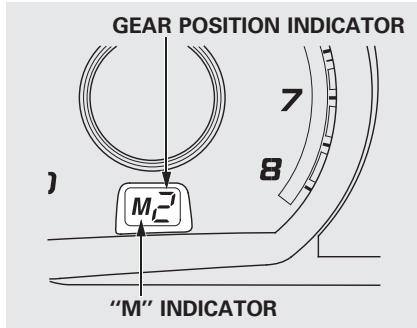


When you move the shift lever from "D" to "S" and pull either paddle shifter, the gear position indicator displays "M" along with the selected gear number.

To upshift, pull the + (right) paddle shifter. To downshift, pull the − (left) paddle shifter.

When you accelerate from a stop, the transmission starts in first gear, and shifts from first to second automatically.You must manually upshift between second and fifth gears. Make sure you upshift before the engine speed reaches the tachometer's red zone.

The transmission remains in the selected gear (6, 5, 4, 3, or 2). There is no automatic downshift when you push the accelerator pedal to the floor.

When you are driving, the transmission downshifts to the lower gear under the following conditions:

- The vehicle slows down to a certain speed.
- You press the brake pedal.
- The vehicle detects that you are driving uphill or downhill.

Downshifting with the paddle shifter allows you to increase the engine braking when going down steep or long hills, and provides more power when climbing uphills. You can upshift the transmission manually to reduce the rpm.

The transmission also shifts automatically as the vehicle comes to a complete stop. It downshifts to first gear when the vehicle speed reaches 6 mph (9 km/h) or less.



*CONTINUED*

The automatic transmission will not allow you to shift up or down if:

- You downshift before the engine speed reaches the highest threshold of the lower gear.

  If you try to do this, the gear position indicator will flash the number of the lower gear several times, then return to a higher gear.

  If the vehicle speed decreases below the redline of the selected lower gear while the indicator is flashing, the transmission downshifts, and the indicator displays the selected gear.

- You upshift before the engine speed reaches the lowest threshold of the higher gear.
- You pull both paddle shifters at the same time.
- You pull one of the two paddle shifters while another paddle shifter is being pressed.

***Starting in Second Gear***

When you are in sequential shift mode, and the vehicle is stopped, pull the + (right) paddle shifter to shift to second gear. You will see “M2” in the display. Starting in second gear helps to reduce wheelspin in deep snow or on a slippery surface.

The super handling-all wheel drive (SH-AWD) system is a full time all-wheel-drive system that automatically controls and transfers varying amounts of engine torque to all wheels independently, according to the driving conditions.

While the SH-AWD system helps to enhance the vehicle's driving stability in all situations, it is still your responsibility to drive and corner at reasonable speeds and to leave a sufficient margin of safety.

## SH-AWD Torque Distribution Monitor

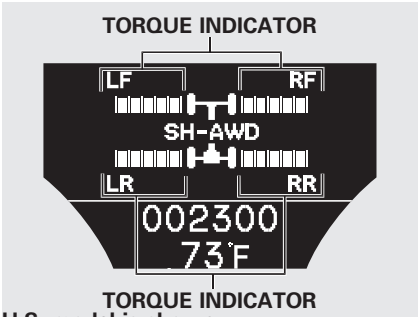


**U.S. model is shown.**

The SH-AWD torque distribution monitor on the multi-information display shows you the amount of torque being sent to the wheels. Each wheel - right front (RF), left front (LF), right rear (RR), and left rear (LR) - has its own torque indicator.

Each torque indicator is displayed as a bar graph divided into 5 segments. The number of segments represents the amount of torque distributed to each wheel.

When there is only a slight change in torque distribution while driving, such as cruising on level roads at the same speed, the torque distribution monitor may stop displaying the amount of torque. This is not a system problem. The monitor will show the amount if the system senses any change in torque distribution.

*CONTINUED*

If the SH-AWD indicator blinks while driving, it indicates the differential temperature is too high. You will also see an “SH-AWD DIFF TEMP. HIGH” message on the multi-information display. If this happens, pull to the side of the road when it is safe, shift to Park, and let the engine idle until the indicator goes out. If the indicator does not go out, take your vehicle to a dealer to have it checked.

If the SH-AWD indicator on the instrument panel stays on, and the “CHECK SH-AWD SYSTEM” message also appears on the multi-information display, there is problem with the SH-AWD system.

Your vehicle still has normal front-wheel drive with vehicle stability assist (VSA), but does not have the advantages of SH-AWD. Have your vehicle checked by a dealer as soon as possible.

Always use the parking brake when you park your vehicle. Make sure the parking brake is set firmly, or your vehicle may roll if it is parked on an incline.

Set the parking brake before you put the transmission in Park. This keeps the vehicle from moving and putting pressure on the parking mechanism in the transmission.

**Parking Tips**

- Make sure the panoramic glass roof and the windows are closed.
- Turn off the lights.
- Place any packages, valuables, etc. in the cargo area or take them with you.
- Lock the doors and the tailgate.
- Never park over dry leaves, tall grass, or other flammable materials. The hot three way catalytic converter could cause these materials to catch on fire.
- If the vehicle is facing uphill, turn the front wheels away from the curb.
- If the vehicle is facing downhill, turn the front wheels toward the curb.
- Check the indicator on the instrument panel to verify that the security system is set.
- Make sure the parking brake is fully released before driving away. Driving with the parking brake partially set can overheat or damage the rear brakes.

Your vehicle is equipped with a tire pressure monitoring system (TPMS) that turns on every time you start the engine and monitors the pressure in your tires while driving.

Each tire has its own pressure sensor. If the air pressure of a tire becomes significantly low, the sensor in that tire immediately sends a signal that causes the low tire pressure/TPMS indicator in the instrument panel to come on. If this happens, you will see which tire is losing pressure on the multi-information display along with a “CHECK TIRE PRESSURE” message.

### Low Tire Pressure/ TPMS Indicator

When the low tire pressure/TPMS indicator is on, one or more of your tires is significantly underinflated. You should stop and check your tires as soon as possible, and inflate them to the proper pressure as indicated on the vehicle's tire information placard.

It is possible that the pressures shown on the multi-information display and the pressures you manually measure are slightly different.
If the difference is significant or you cannot make the low tire pressure/ TPMS indicator and message on the multi-information display go out after inflating the tires to the specified values, have your dealer check the system as soon as possible.

If you think you can safely drive a short distance to a service station, proceed slowly to the station, then inflate the tire to the recommended pressure.

If the tire is flat, or if the tire pressure is too low to continue driving, replace the tire with the compact spare tire (see page 579).

Driving on a significantly under-inflated tire causes the tire to overheat and can lead to tire failure. Under-inflation also reduces fuel efficiency and tire tread life, and may affect the vehicle's handling and stopping ability.

Because tire pressure varies by temperature and other conditions, the low tire pressure/TPMS indicator may come on unexpectedly.

For example, if you check and fill your tires in a warm area, then drive in extremely cold weather, the tire pressure will be lower than measured and could be underinflated and cause the low tire pressure/ TPMS indicator to come on. Or, if you check and adjust your tire pressure in cooler conditions, and drive into extremely hot conditions, the tire may become overinflated. However, the low tire pressure/ TPMS indicator will not come on if the tires are overinflated.

Refer to page 567 for tire inflation guidelines.

If there is a problem with the TPMS, this indicator begins to flash. It stops flashing after approximately 1 minute, then stays on. You will also see a “CHECK TPMS SYSTEM” message on the multi-information display (see page 91).

Although your tire pressure is monitored, you must manually check the tire pressures monthly.

Each tire, including the spare, should be checked monthly when the vehicle is cold, and set to the recommended inflation pressure as specified on the vehicle placard and in the owner's manual (see page 568).

### Tire Pressure Monitor

U.S. model

To select the tire pressure monitor, press the INFO button several times with the ignition switch in the ON (II) position.

You will see the above display on the multi-information display when all tire pressures are normal.

*CONTINUED*

Canadian model

Each tire pressure is shown in PSI (U.S. models) or in kPa (Canadian models).

Models equipped with the keyless access system have an engine start/stop button instead of an ignition switch. ON mode is the equivalent of ON (II). See page 196 for ignition switch and power mode comparison.

This shows that front left tire is losing pressure.

Each tire has its own pressure sensor. If the air pressure of a tire becomes significantly low, the sensor in that tire immediately sends a signal that causes the low tire pressure/TPMS indicator in the instrument panel to come on. If this happens, you will see which tire is losing pressure on the multi-information display along with a “CHECK TIRE PRESSURE” message.

U. S.

Canada

If any of the tires has low pressure, the tire pressure monitor also shows the above message and each tire pressure to warn you about the low tire pressure when you select the display by pressing the INFO button several times.

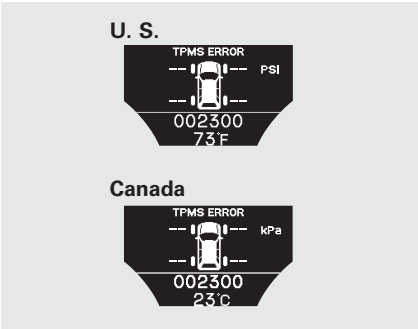


If there is a problem with the TPMS, the tire pressure monitor shows a "TPMS ERROR" message and the tire pressure readings are not displayed. If this happens, you will first see a system warning message "CHECK TPMS SYSTEM" on the multi-information display.

## TPMS System Failure

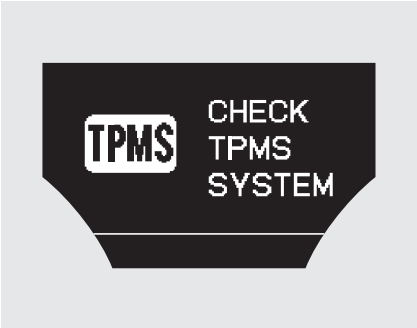


If there is a problem with the TPMS, you will see the above message on the multi-information display.

If you see this message, the system is off and is not monitoring the tire pressures. Have the system checked by your dealer as soon as possible.

Also, the low tire pressure/TPMS indicator begins to flash, then stays on (see page 490).

If the low tire pressure/TPMS indicator comes on, or the multi-information display shows a "CHECK TPMS SYSTEM" message, the VSA system automatically turns on even when the VSA system is turned off by pressing the VSA OFF switch (see page 509). If this happens, you cannot turn the VSA system off by pressing the VSA OFF switch again.

When you restart the vehicle with the compact spare tire, the TPMS system message will also be displayed on the multi-information display after several miles (kilometers) driving.



*CONTINUED*

**Changing a Tire with TPMS**
If you have a flat tire, the low tire pressure/TPMS and tire monitor indicators will come on. Replace the indicated flat tire with the compact spare tire (see page 579).

After the flat tire is replaced with the spare tire, the low tire pressure/TPMS indicator stays on while driving. After several miles (kilometers) driving, this indicator begins to flash, then stays on again. You will also see a “CHECK TPMS SYSTEM” message on the multi-information display. This is normal; the system cannot monitor the spare tire pressure. Manually check the spare tire pressure to be sure it is correct.

This indicator and the warning message on the multi-information display will go off, after several miles (kilometers) driving, when the spare tire is replaced with the specified regular tire equipped with the tire pressure monitor sensor.
Each wheel is equipped with a tire pressure sensor. You must use TPMS specific wheels. It is recommended that you always have your tires serviced by your dealer or a qualified technician.
Never use a puncture-repairing agent in a flat tire. If used, you will have to replace the tire pressure sensor. Have the flat tire repaired by your dealer as soon as possible.

If the low tire pressure/TPMS indicator and the low tire position on the low tire pressure monitor do not go out after inflating the tires to the specified values, have your dealer check the system as soon as possible.

*As required by the FCC:*
*This device complies with Part 15 of the FCC rules. Operation is subject to the following two conditions: (1) This device may not cause harmful interference, and (2) this device must accept any interference received, including interference that may cause undesired operation.*

*Changes or modifications not expressly approved by the party responsible for compliance could void the user's authority to operate the equipment.*

*This device complies with Industry Canada Standard RSS-210.*
*Operation is subject to the following two conditions: (1) this device may not cause interference, and (2) this device must accept any interference that may cause undesired operation of the device.*

Your vehicle is equipped with disc brakes at all four wheels. A power assist helps reduce the effort needed on the brake pedal. The emergency brake assist system increases the stopping force when you depress the brake pedal hard in an emergency situation. The anti-lock brake system (ABS) helps you retain steering control when braking very hard.

Resting your foot on the pedal keeps the brakes applied lightly, builds up heat, and reduces their effectiveness and reduces brake pad life. In addition, fuel economy can be reduced. It also keeps your brake lights on all the time, confusing drivers behind you.

Constant application of the brakes when going down a long hill builds up heat and reduces their effectiveness. Use the engine to assist the brakes by taking your foot off the accelerator and downshifting to a lower gear.

Check the brakes after driving through deep water. Apply the brakes moderately to see if they feel normal. If not, apply them gently and frequently until they do. Be extra cautious in your driving.

**Braking System Design**
The hydraulic system that operates the brakes has two separate circuits. Each circuit works diagonally across the vehicle (the left-front brake is connected with the right-rear brake, etc.). If one circuit should develop a problem, you will still have braking at two wheels.

**Brake Wear Indicators**
All four brakes have audible brake wear indicators.

If the brake pads need replacing, you will hear a distinctive, metallic screeching sound when you apply the brake pedal. If you do not have the brake pads replaced, they will screech all the time. It is normal for the brakes to occasionally squeal or squeak when you apply them.

The anti-lock brake system (ABS) helps prevent the wheels from locking up, and helps you retain steering control by pumping the brakes rapidly, much faster than a person can do it.

The electronic brake distribution (EBD) system, which is part of the ABS, also balances the front-to-rear braking distribution according to vehicle loading.

*You should never pump the brake pedal.* Let the ABS work for you by always keeping firm, steady pressure on the brake pedal. This is sometimes referred to as "stomp and steer."

You will feel a pulsation in the brake pedal when the ABS activates, and may hear some noise. This is normal: it is the ABS rapidly pumping the brakes. On dry pavement, you will need to press on the brake pedal very hard before the ABS activates. However, you may feel the ABS activate immediately if you are trying to stop on snow or ice.

### ABS Indicator

If this indicator comes on, the anti-lock function of the braking system has shut down. The brakes still work like a conventional system, but without anti-lock. You should have your dealer inspect your vehicle as soon as possible.

You will also see a "CHECK ABS SYSTEM" message on the multi-information display (see page 90).

If the indicator comes on while driving, test the brakes as instructed on page 594.

If the ABS indicator and the brake system indicator come on together, and the parking brake is fully released, the EBD system may also be shut down.

Test your brakes as instructed on page 594. If the brakes feel normal, drive slowly and have your vehicle repaired by your dealer as soon as possible. Avoid sudden hard braking which could cause the rear wheels to lock up and possibly lead to a loss of control.

**Important Safety Reminders**

**ABS does not reduce the time or distance it takes to stop the vehicle.** It only helps with steering control during braking.

**ABS will not prevent a skid that results from changing direction abruptly,** such as trying to take a corner too fast or making a sudden lane change. Always drive at a safe speed for the road and weather conditions.

**ABS cannot prevent a loss of stability.** Always steer moderately when you are braking hard. Severe or sharp steering wheel movement can still cause your vehicle to veer into oncoming traffic or off the road.

**A vehicle with ABS may require a longer distance to stop** on loose or uneven surfaces, such as gravel or snow, than a vehicle without anti-lock.

**Overview**
*If equipped*
The collision mitigation braking system™ (CMBS™) can assist you when there is a possibility of your vehicle hitting the vehicle in front of you. It is designed to reduce the speed of your vehicle before an unavoidable collision occurs and, if possible, to alert you to a potential collision while there is time to prevent it. Here is a brief description of what the CMBS can do:

- When your speed is above 10 mph (16 km/h), the CMBS radar sensor in the front grille can sense a vehicle ahead of you. When your vehicle gets too close to the vehicle ahead of you, the system may activate a warning beep, causing automatic application of the brakes, and causing the e-pretensioners to tighten the front seat belts (see page 24).
- The CMBS does not activate if the speed difference between the two vehicles is less than 10 mph (16 km/h). CMBS may also not activate if you turn the steering wheel to avoid the collision.

When the CMBS activates, the brake lights also come on.

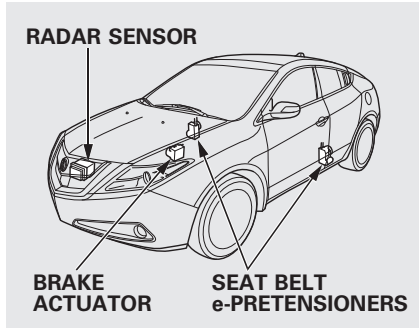


The CMBS consists of a radar sensor in the front grille, a brake actuator in the engine compartment, an indicator on the instrument panel, seat belt e-pretensioners on the front seats, and an on/off switch under the driver's side vent.

## Radar Sensor

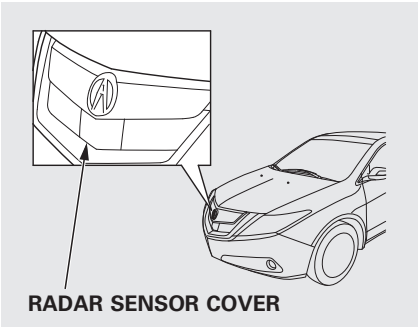


The radar sensor cover is located under the Acura emblem in the front grille. If the radar sensor cover is covered with mud, dirt, dead leaves, wet snow, etc., or if you put a sticker on it, the CMBS will automatically shut off, and the CMBS indicator on the instrument panel will come on. You will also see a "CHECK CMBS RADAR SENSOR" message on the multi-information display for about 5 seconds.

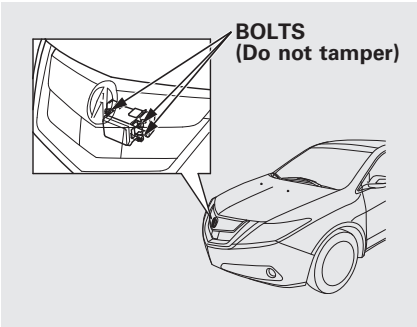


Always keep the radar sensor cover clean. If it gets dirty, clean it with water or a mild detergent. Never use chemical solvents or polishing powder.

There are three bolts on the sides of the radar sensor. Do not tamper with these bolts, or you may cause the system to malfunction.

If either of these parts receives a strong impact, to turn off the system, press and hold the CMBS off switch until you hear a beep, and have your vehicle checked by a dealer. If the front grille ever needs to be repaired, consult a dealer first.

If the radar sensor cover or the radar sensor ever needs to be removed, take your vehicle to a dealer.

**NOTICE**

*When the CMBS is on, the radar sensor constantly scans for vehicles ahead of you. This means that driving on a road with a few or no vehicles could cause a CHECK CMBS RADAR SENSOR message to appear on the multi-information display. This is normal and not a cause for concern.*

*CONTINUED*

The radar sensor may not always scan as intended. Here are two examples:

- Your vehicle is tilted because of a heavy load in the rear or from modifications to the suspension. Do not overload your vehicle (see **Carrying Cargo** on page 465), and do not make any modifications to the suspension (see **Accessories and Modifications** on page 463).
- The tires are not correctly maintained. Always make sure the tire pressures are correct (see page 568), and that the tires are the correct size and in good condition (see Tires on page 567).

## Collision Alarm

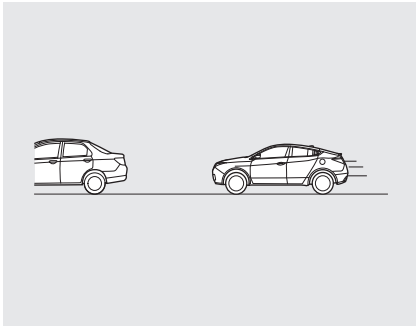

If the system senses a likely collision with a vehicle or object ahead of you, it alerts you with an audible and a visual alarm.

The audible alarm is a constant beeping sound; the visual alert is an amber colored BRAKE message that flashes on the multi-information display. If these alarms come on, take the appropriate means to prevent a collision (apply the brakes, change lanes, etc.).

| Distance between vehicles | | CMBS | | | |
|---|---|---|---|---|---|
| | | The radar sensor detects a vehicle | E-pretensioner | Audio & Visual WARNINGS | Braking operation |
| Stage one | 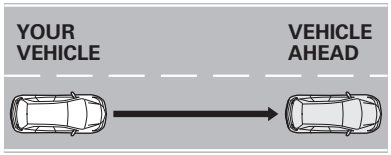 | There is a risk of a collision with the vehicle ahead, or the distance between the vehicles has dropped below a certain level. | — | A beep sounds and “BRAKE” flashes on the multi-information display. | — |
| Stage two | 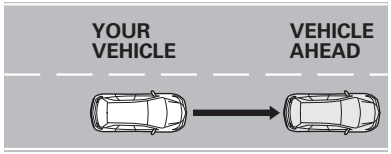 | The distance between the two vehicles continues to diminish. | Retracts the driver's seat belt gently a few times, providing a physical warning. | | Lightly applied |
| Stage three* | 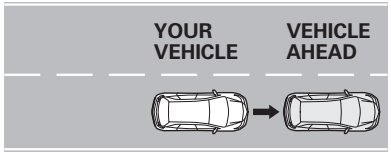 | The CMBS determines that a collision is unavoidable. | Forcefully tightens driver and front passenger seat belts. | | Forcefully applied |

*: Depending on the circumstances, CMBS may not go through all of the alert stages before initiating the last stage.

*CONTINUED*

### CMBS OFF Button

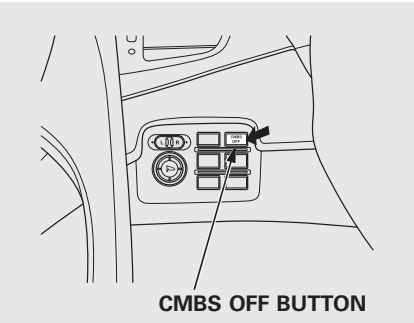


To turn the CMBS off, press the CMBS OFF button under the driver's side vent for about 1 second. When you do this, a beeper sounds, a CMBS indicator on the instrument panel comes on, and a CMBS OFF message appears on the multi-information display. To turn the system back on, press the button again for about 1 second.

When you select the ON mode by operating the engine start/stop button (see page 194), the CMBS is turned on if it was on previously.

### Automatic Shut Off

Any of the conditions below can cause the CMBS to shut off. When the system shuts off, the CMBS indicator in the instrument panel comes on, and a CHECK CMBS SYSTEM message appears on the multi-information display for about 5 seconds.

- An abnormal tire condition is detected (wrong tire size, flat tire, etc.).
- Extended off-road or mountainous driving.
- Driving your vehicle with the parking brake applied.
- Driving your vehicle in bad weather (rain, fog, snow, etc.).
- A dirty radar sensor cover on the front grille.

The CMBS will automatically recover when these conditions are improved.

## CMBS Indicator

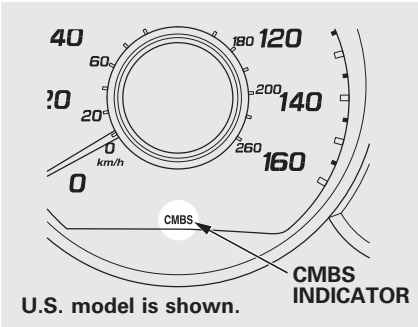

U.S. model is shown.

This indicator comes on for several seconds when you select the ON mode by operating the engine start/stop button (see page 194). It also comes on and stays on when you turn the CMBS off by pressing the CMBS OFF button.

To turn the CMBS back on, make sure the vehicle is stopped and the power mode is set to ON, then press the CMBS OFF switch for about 1 second.

The CMBS indicator normally comes on under these conditions:

- When you manually turn off the system.
- When the system shuts off automatically.
- When you drive in bad weather (rain, snow, fog, etc.).
- If anything covers the radar sensor cover (dirt, mud, dry leaves, wet snow, etc.).
- When the VSA system indicator comes on (see page 508).
- When you select the ON mode by operating the engine start/stop button, the CMBS indicator should come on for a few seconds, then go off. If the indicator comes on at any other time and a CHECK CMBS SYSTEM message appears on the multi-information display, there is a problem with the CMBS. You can still drive your vehicle, but CMBS will not be operating. Have your vehicle checked by a dealer.



*CONTINUED*

**Limitations**
The CMBS may not activate under some conditions. Here are a few examples:

- The distance between your vehicle and the vehicle ahead of you is too short.
- A vehicle cuts in front of you at a slow speed.

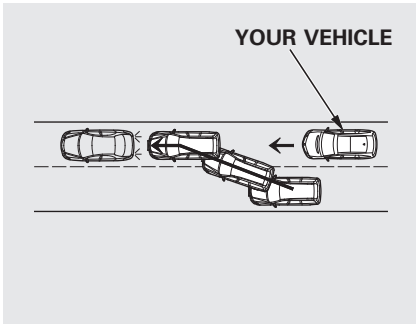


- A vehicle cuts in front of you and brakes suddenly.
- When you accelerate rapidly and approach the vehicle ahead of you at high speed.
- Immediately after you drive off.

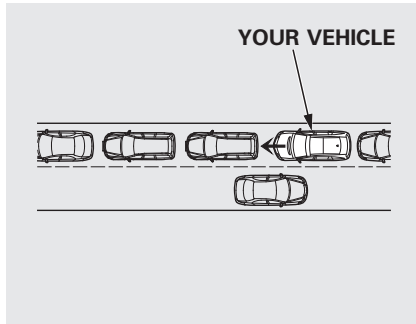


- Driving in heavy, stop-and-go traffic.
- The vehicle ahead of you is a motorcycle or other small vehicle.

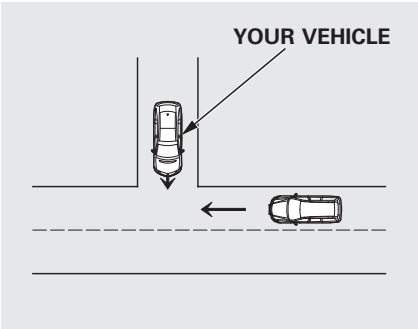


- A vehicle suddenly crosses in front of you.

**NOTICE**

*The CMBS is not designed to detect pedestrians.*

Even with little or no chance of a collision, the CMBS may activate under these conditions:

- When you change lanes quickly, then overtake the vehicle ahead of you.

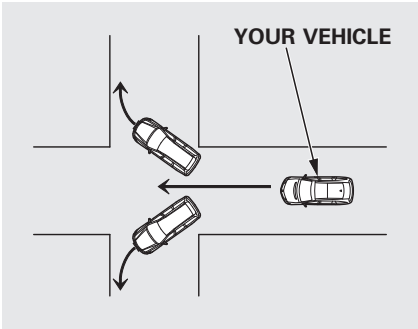


- When you approach or pass a vehicle ahead of you that is turning left or right in an intersection.

*CONTINUED*

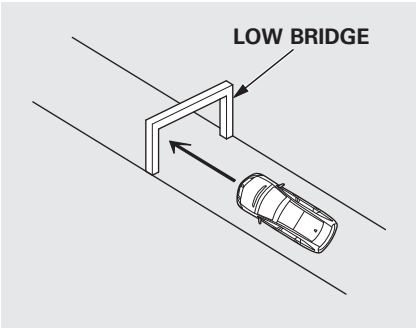


- When you pass a low bridge at high speed.
- When you go over a sharp-edged speed bump at high speed.
- When you go over areas of construction on the road surface.

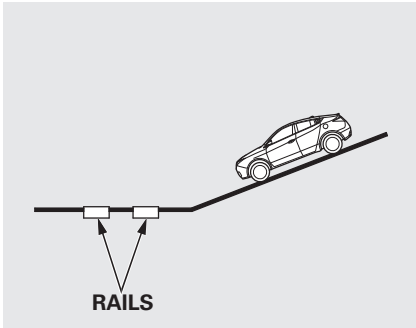


- When you approach train tracks at the bottom of a hill and you do not apply the brakes.

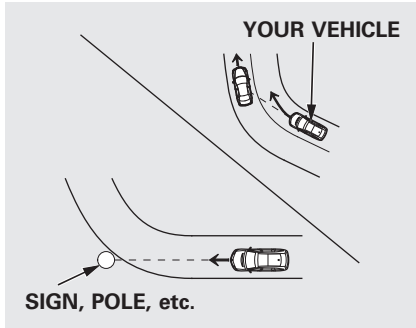


Because of the road condition (curved, winding, etc.) or the state of your vehicle (turning angle, lane position, etc.), CMBS can sometimes mistake a stationary object (light pole, traffic sign, etc.) as a vehicle ahead of you and temporarily operate. This is normal.

**Important Safety Reminder**
The main purpose of the CMBS is to reduce the severity of injuries caused by an unavoidable collision. While the CMBS may help to alert you and minimize the severity of a collision, it may not activate in every dangerous situation.

Even with the CMBS, it is still your responsibility to operate the brake pedal and steering wheel appropriately, according to the driving conditions.

*As required by the FCC:*
*This device complies with Part 15 of the FCC rules. Operation is subject to the following two conditions: (1) This device may not cause harmful interference, and (2) this device must accept any interference received, including interference that may cause undesired operation.*

*Changes or modifications not expressly approved by the party responsible for compliance could void the user's authority to operate the equipment.*

*This device complies with Industry Canada Standard RSS-210. Operation is subject to the following two conditions: (1) this device may not cause interference, and (2) this device must accept any interference that may cause undesired operation of the device.*

The vehicle stability assist (VSA) system helps to stabilize the vehicle during cornering if the vehicle turns more or less than desired. It also assists you in maintaining traction while accelerating on loose or slippery road surfaces. It does this by regulating the engine's output and by selectively applying the brakes.

When VSA activates, you may notice that the engine does not respond to the accelerator in the same way it does at other times. There may also be some noise from the VSA hydraulic system. You will also see the VSA activation indicator blink.

The VSA system cannot enhance the vehicle's driving stability in all situations and does not control your vehicle's entire braking system. It is still your responsibility to drive and corner at reasonable speeds and to leave a sufficient margin of safety.

**VSA OFF Indicator**

When VSA is off, the VSA OFF indicator comes on as a reminder.

**Vehicle Stability Assist (VSA) System Indicator**

When VSA activates, you will see the VSA system indicator blink.

If this indicator comes on while driving, pull to the side of the road when it is safe, and turn off the engine. Reset the system by restarting the engine. If the VSA system indicator stays on or comes back on while driving, have the VSA system inspected by your dealer.

**NOTE:** The main function of the VSA system is generally known as Electronic Stability Control (ESC). The system also includes a traction control function.

If the indicator does not come on when the power mode is set to ON, there may be a problem with the VSA system. Have your dealer inspect your vehicle as soon as possible.

You will also see a “CHECK VSA SYSTEM” message on the multi-information display if there is a problem with the VSA system.

If the low tire pressure/TPMS indicator comes on, or the multi-information display shows a “CHECK TPMS SYSTEM” message, the VSA system automatically turns on even when the VSA system is turned off by pressing the VSA OFF button. If this happens, you cannot turn the VSA system off by pressing the VSA OFF button again.

Without VSA, your vehicle will have normal braking and cornering ability, but it will not have VSA traction and stability enhancement.

**VSA OFF Button**

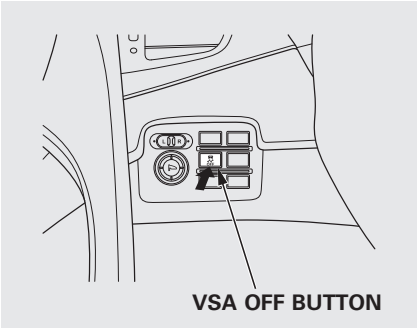


This button is under the driver's side vent. To turn the VSA system on and off, press and hold it until you hear a beep.

When VSA is off, the VSA OFF indicator comes on as a reminder. Press and hold the button again. It turns the system back on.

VSA is turned on every time you start the engine, even if you turned it off the last time you drove the vehicle.

In certain unusual conditions when your vehicle gets stuck in shallow mud or fresh snow, it may be easier to free it with the VSA temporarily switched off. When the VSA system is off, the traction control system is also off. You should only attempt to free your vehicle with the VSA off if you are not able to free it when the VSA is on.

Immediately after freeing your vehicle, be sure to switch the VSA on again. We do not recommend driving your vehicle with the VSA and traction control systems switched off.

*CONTINUED*

### VSA and Tire Sizes

Driving with varying tire or wheel sizes may cause the VSA to malfunction. When replacing tires, make sure they are of the same size and type as your original tires (see page 571).

If you install winter tires, make sure they are the same size as those that were originally supplied with your vehicle. Exercise the same caution during winter driving as you would if your vehicle was not equipped with VSA.

### Hill Start Assist

Your vehicle is equipped with a hill start assist feature to help prevent the vehicle from rolling on inclines as you move your foot from the brake pedal to the accelerator.

To activate hill start assist, you must come to a complete stop and make sure the shift lever is either in D or S when facing uphill, or reverse when facing downhill.

This feature begins working a few seconds after you are in the correct gear position. Release the brake pedal. The brakes remain engaged briefly to keep the vehicle from rolling forward or backward. Gently apply the accelerator pedal as in normal driving. Hill start assist will release brake pressure gradually as you accelerate.

Hill start assist may not prevent your vehicle from rolling downhill on a very steep or slippery slope, and will not operate on small inclines.

Hill start assist is not a replacement for the parking brake. If parking your vehicle, ensure that the transmission is in park, and/or the parking brake is fully applied before exiting the vehicle.

If the VSA system indicator comes on with a “CHECK HILL START ASSIST SYSTEM” message on the multi-information display, there may be a problem with the hill start assist. The VSA also may not function. Have your vehicle inspected by your dealer.

Hill start assist will still operate even when VSA is switched off.

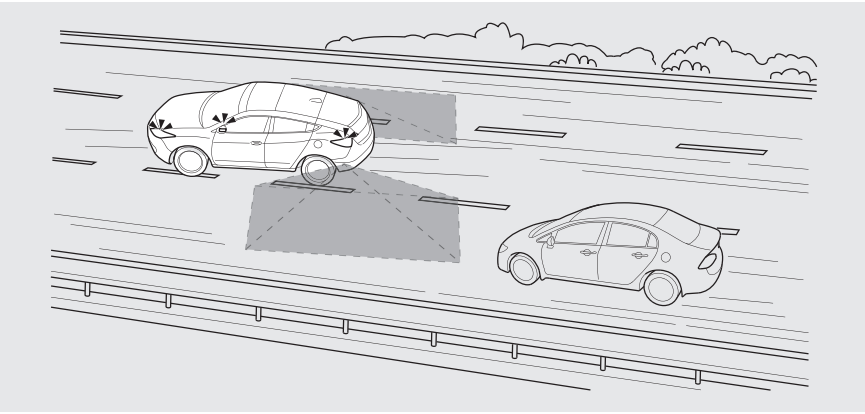

*On models with adaptive cruise control (ACC)*

The blind spot information system (BSI) is designed to assist you when you are changing lanes.

If the system detects vehicles in adjacent lanes, it automatically illuminates the appropriate indicator to provide assistance when you change lanes. It is not a substitute for visual confirmation that it is safe to change lanes.

**⚠WARNING**

Failure to visually confirm that it is safe to change lanes before doing so may result in a crash and serious injury or death. Do not rely only on the blind spot information system when changing lanes.

Always look in your mirrors, to either side of your vehicle, and behind you for other vehicles before changing lanes.



*CONTINUED*

### BSI System Operation

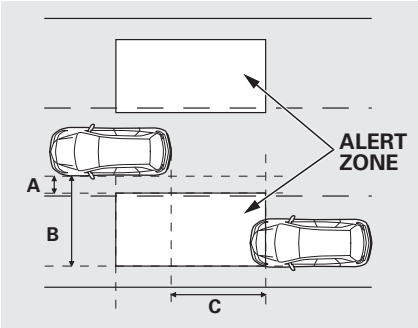


A:Approximately 1.6 ft. (0.5m)

B:Approximately 10 ft. (3m)

C:Approximately 10 ft. (3m)

BSI system is designed to detect vehicles in specified alert zones adjacent to your vehicle, particularly in harder to see areas commonly known as “blind spots.”

When BSI detects a vehicle in an alert zone, a BSI alert indicator comes on near the corresponding outside rearview mirror.

While your vehicle is moving forward at a speed between 6 mph (10 km/h) and 100 mph (160 km/h), the BSI alert indicator comes on under either of the following conditions:

- Another vehicle overtakes you, entering the alert zone from behind, at a speed that differs from your vehicle's speed by no more than 31 mph (50 km/h).
- You pass a vehicle at a speed that differs from that vehicle's speed by no more than 12 mph (20 km/h). The indicator comes on approximately 2 seconds after the vehicle enters the alert zone.

The system will not alert you to all vehicles in blind spot zones (such as vehicles you have just passed which you should already be aware of) unless it remains in the alert zone for approximately 2 or more seconds.

While the system is on, BSI is active whenever the shift lever is in the D or S position.

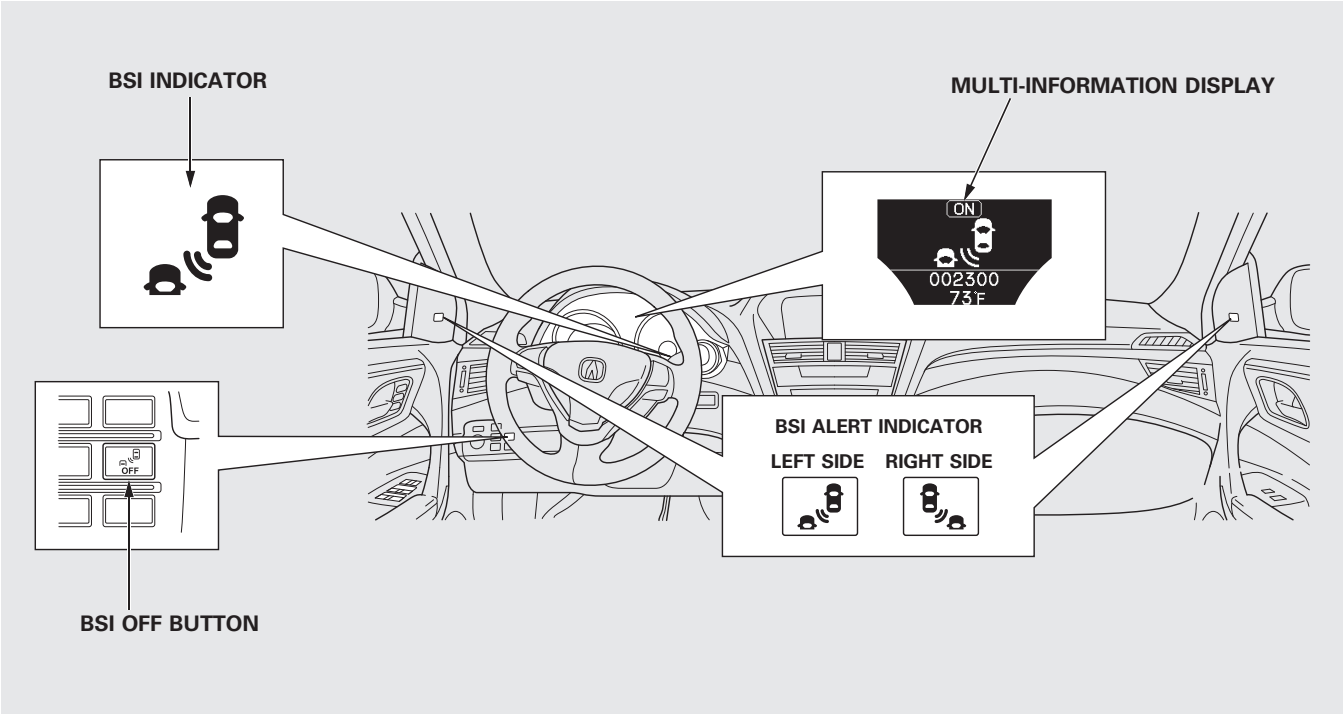
BSI INDICATOR
MULTI-INFORMATION DISPLAY
ON
002300
73°F
BSI ALERT INDICATOR
LEFT SIDE
RIGHT SIDE
OFF
BSI OFF BUTTON

*CONTINUED*

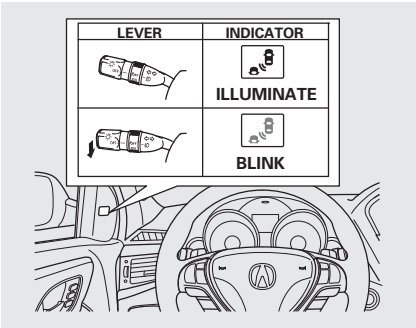


The BSI alert indicator starts to blink as a reminder if you move the turn signal lever in the direction of the detected vehicle.

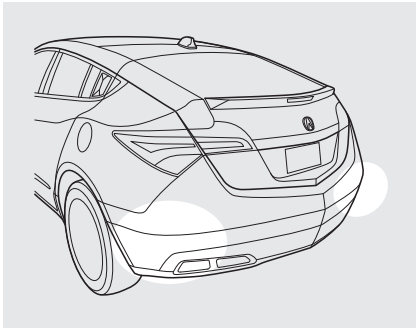

Radar sensors, located underneath each corner of the rear bumper, detect objects. Do not cover this area with labels or stickers of any kind. Always keep this area is free of any kind of dirt every time you get in the vehicle.

Impacts to the radar sensors or the area around them can affect system performance. If an impact occurs, have the system checked by your dealer.

**Important Precautions**
Like all assistance systems, BSI has limitations. Over-reliance on BSI may result in a collision. Always look in your mirrors, to either side of your vehicle, and behind you for other vehicles before changing lanes.

The system should be turned off when towing a trailer. Due to the added mass and resulting changes in radar coverage, the system cannot operate as intended, and detection of the trailer itself by the radar sensors may cause the BSI alert indicators to illuminate.

**Limitations**
The BSI alert indicators may not illuminate under the following circumstances:

- The speed difference between your vehicle and a vehicle approaching from behind is greater than 31 mph (50 km/h).
- A vehicle is parked in a side lane.
- The speed difference between your vehicle and the vehicle you are passing is greater than 6 mph (10 km/h).
- An object not detected by the radar sensors approaches or passes your vehicle.



*CONTINUED*

BSI may be adversely affected under the following circumstances:

- When objects such as guard rails, poles, trees, etc., are detected.
- When an object that doesn't reflect radio waves well, such as a motorcycle, is in the alert zone.
- A vehicle is behind or approaching your vehicle while on a curved road.
- When towing a trailer.
- A vehicle is moving from a far lane to the adjacent lane.
- The system picks up external electrical interference.
- The rear bumper has been deformed, or improperly repaired.

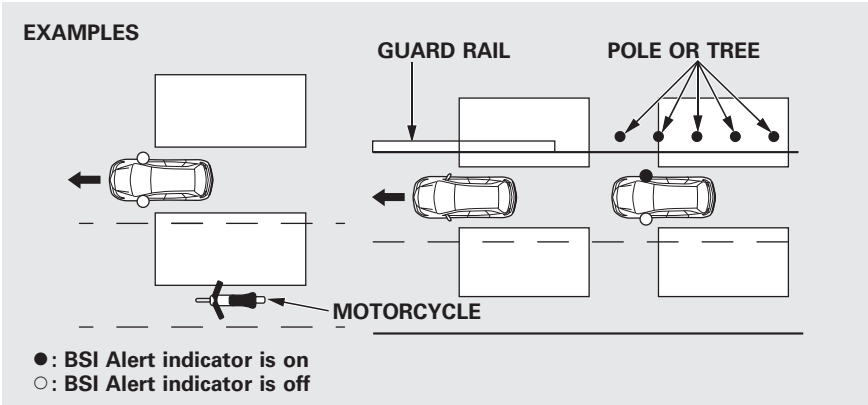


- The orientation of the sensors has been changed.
- Bad weather conditions, such as heavy rain, snow and fog.

The system is for your convenience. Even if an object is within the alert zone, the system may not detect it, depending on its shape.
Always look in your mirrors, to either side of your vehicle, and behind you for other vehicles before changing lanes.

### BSI OFF Button

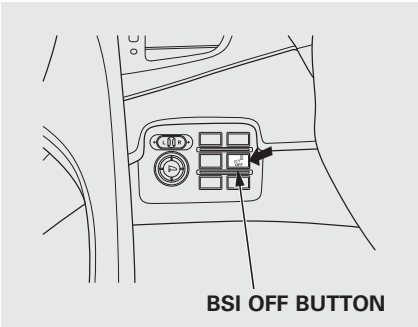


To turn the system off, press the BSI OFF button when the power mode is set to ON with the engine start/stop button. The BSI indicator on the instrument panel glows amber, indicating that the system is turned off. The multi-information display indicates that the system is off.

To turn the system on again, press the same button. The BSI indicator on the instrument panel turns off. The multi-information display indicates that the system is on.

When the power mode is set to ON with the engine start/stop button, the system will be in the previously selected ON or OFF setting.



*CONTINUED*

## BSI Status Displays

| System Status | Multi-information display message | BSI Indicator | Description |
|---|---|---|---|
| ON | | – | When you set the power mode to ON with the engine start/stop button, the BSI system indicators on the multi-information display and the instrument panel will inform you if the system is ON or OFF for about 5 seconds.<br>The BSI indicator light illuminates or flashes according to the system status.<br>A chime sounds to indicate that the system has been turned ON or OFF. |
| OFF | | | |
| ON/OFF* | | | If while driving, mud, snow, or ice accumulates in the vicinity of sensor:<br>• The system will shut down<br>• The BSI indicator illuminates, a message is displayed on the multi-information display, and a chime sounds.<br>The BSI indicator will turn off and the system will return to normal once the obstacle is removed, and you begin to drive.<br>Always keep the area around the radar sensors clean. The BSI system may not operate properly if the sensors are obstructed.<br>The BSI alert indicator:<br>• May come on when a vehicle enters one of the alert zones, even if this message is displayed.<br>• May not come on due to obstruction (splashes, etc.), even if this message is not displayed.<br>*: System status may remain on even when the BLIND SPOT NOT AVAILABLE message is displayed. |
| OFF | | | If the system is faulty, the BSI indicator light illuminates and a message is displayed on the multi-information display.<br>Have your vehicle inspected at your Acura dealer. |

*As required by the FCC:*
*This device complies with Part 15 of the FCC rules. Operation is subject to the following two conditions: (1) This device may not cause harmful interference, and (2) this device must accept any interference received, including interference that may cause undesired operation.*

*Changes or modifications not expressly approved by the party responsible for compliance could void the user's authority to operate the equipment.*

*This device complies with Industry Canada Standard RSS-210.*

*Operation is subject to the following two conditions: (1) this device may not cause interference, and (2) this device must accept any interference that may cause undesired operation of the device.*

**Integrated Dynamics System (IDS)**

*If equipped*

The integrated dynamics system (IDS) is always on, constantly adjusting your vehicle's dampers and power steering assist according to current road conditions, vehicle speed and handling. You can choose between two settings, sport mode and comfort mode, according to your driving taste.

*Sport Mode*

The system prioritizes handling response for higher handling performance.

*Comfort mode*

The system prioritizes driving comfort according to the road surface.

There are two main components to IDS that work together in both modes:

The active damper system (ADS) uses electrically controlled dampers to enhance handling precision, tire to road adhesion and riding comfort on rough road surfaces.

The electronically controlled power steering (ECPS) changes the amount of steering assist depending on vehicle speed.

*CONTINUED*

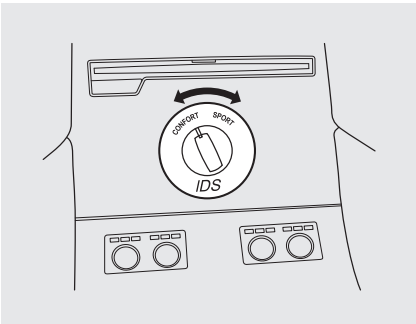


Turn the Integrated Dynamics System (IDS) switch located on the center console to select the comfort and sport mode.

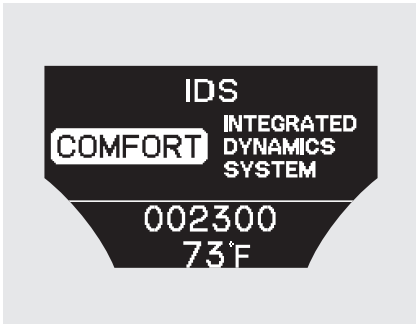


When comfort mode is selected, the message “COMFORT” will appear on the multi-information display for five seconds.

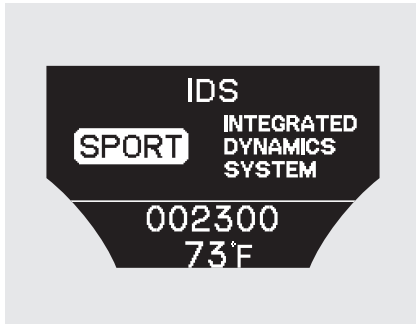


When sport mode is selected, the message “SPORT” will appear on the multi-information display for five seconds.

### Active Damper System Indicator

If there is a problem with the active damper system, the system shuts down and the active damper system indicator on the instrument panel comes on.

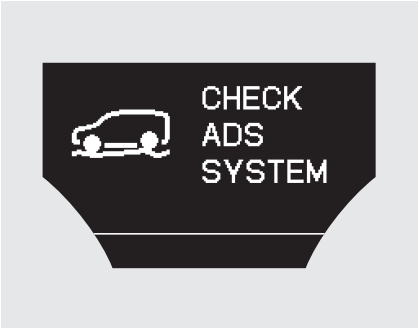


You will also see the “CHECK ADS SYSTEM” message appear on the multi-information display.

In addition, the ECPS also defaults into sport mode, and you will see the “CHECK POWER STEERING SYSTEM” message appear on the multi-information display (see page 91).

If you see this warning indicator and message, have your vehicle checked at your dealer as soon as possible.

In this case, your vehicle still has the normal damper function, but it will not have the active damper function.

### Electronically Controlled Power Steering System (ECPS) Indicator

If there is a problem with the Electronically Controlled Power Steering System, the system shuts down and the system indicator on the instrument panel comes on.

You will also see the “CHECK POWER STEERING SYSTEM” message appear on the multi-information display.

If you see this warning indicator and message, have your vehicle checked at your dealer as soon as possible.

In this case, your vehicle still has the power steering function, but the steering effort might feel different.

Your vehicle has been designed primarily to carry passengers and their cargo. You can also use it to tow a trailer if you carefully observe the load limits, use the proper equipment, and follow the guidelines in this section.

If your vehicle is equipped with the blind spot information system (BSI), do not use it when towing a trailer. For more information see page 517.

***Break-In Period***
Avoid towing a trailer during your vehicle's first 600 miles (1,000 km) (see page 454).

Be sure to read the **Off-Highway Driving Guidelines** section on page 528 if you plan to tow off paved surfaces.

**⚠WARNING**

Exceeding any load limit or improperly loading your vehicle and trailer can cause a crash in which you can be seriously hurt or killed.

Check the loading of your vehicle and trailer carefully before starting to drive.

## Load Limit

***Total Trailer Weight***
The maximum allowable weight of the trailer and everything in or on it must not exceed 1,500 lbs (680 kg). Towing a load that is too heavy can seriously affect your vehicle's handling and performance. It can also damage the engine and transmission.

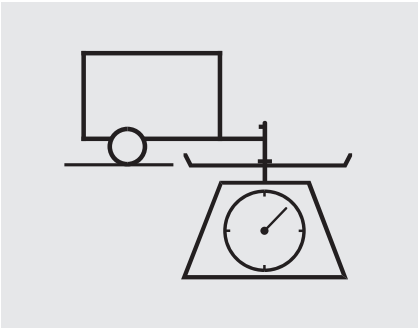

***Tongue Load***
The weight that the tongue of a fully loaded trailer puts on the hitch should be approximately 10% of the total trailer weight.
Too much tongue load reduces front-tire traction and steering control. Too little tongue load can make the trailer unstable and cause it to sway.

To achieve a proper tongue load, start by loading 60% of the load toward the front of the trailer and 40% toward the rear, then re-adjust the load as needed.

**Gross Vehicle Weight Rating (GVWR)** – The maximum allowable weight of the vehicle, all occupants, all accessories, all cargo, and the tongue load is 5,534 lbs (2,510 kg).

**Gross Axle Weight Ratings (GAWR)** – The maximum allowable weight of the vehicle, all occupants, all accessories, all cargo, and the tongue load must not exceed 2,921 lbs (1,325 kg) on the front axle, and 2,679 lbs (1,215 kg) on the rear axle.

**Gross Combined Weight Rating (GCWR)** – The maximum allowable weight of the fully loaded vehicle and trailer is 6,593 lbs (2990 kg).

**Checking Loads**
The best way to confirm that all loads are within limits is to check them at a public scale. For public scales in your area, check your local phone book, or contact your trailer dealer or rental agency for assistance.

If you cannot get to a public scale, you can estimate the total trailer weight by adding the weight of your trailer (as quoted by the manufacturer) with everything in or on the trailer.

If you normally pull the same load each time you tow a trailer, you can use a suitable scale or a special tongue load gauge to check the tongue load the first time you set up a towing combination (a fully loaded vehicle and trailer), then recheck the tongue load whenever the conditions change.

*CONTINUED*

## Towing Equipment and Accessories

Towing can require a variety of equipment, depending on the size of your trailer, how it will be used, how much load you are towing, and where you tow.

Discuss your needs with your trailer sales or rental agency, and follow the guidelines in this section. Also make sure that all equipment is properly installed and maintained, and that it meets federal, state, province, and local regulations.

### *Hitch*

Any hitch used on your vehicle must be properly bolted to the underbody.

### *Safety Chains*

Always use safety chains when you tow a trailer. Make sure the chains are secured to the trailer and hitch, and that they cross under the tongue and can catch the trailer if it becomes unhitched. Leave enough slack to allow the trailer to turn corners easily, but do not let the chains drag on the ground.

### *Trailer Lights*

Trailer lights and equipment must comply with federal, state, provincial, territorial, and local regulations. Check with your local trailer sales or rental agencies for the requirements in the area where you plan to tow, and use only equipment designed for your vehicle.

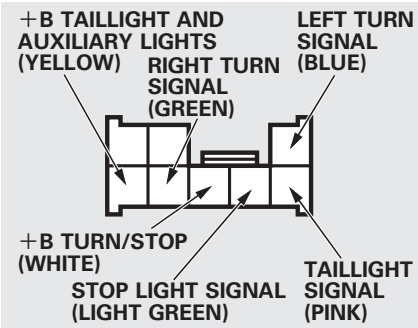


Your vehicle has a trailer lighting connector located under the right side tool case in the cargo area. Refer to the drawing above for the wiring color code and purpose of each pin.

Since lighting and wiring vary by trailer type and brand, you should have a qualified technician install a suitable connector between the vehicle and the trailer. Improper equipment or installation can cause damage to your vehicle's electrical system and affect your vehicle warranty.

***Additional Towing Equipment***

Many states and Canadian provinces require special outside mirrors when towing a trailer. Even if they don't, you should install special mirrors if you cannot clearly see behind you, or if the trailer creates a blind spot.

Ask your trailer sales or rental agency if any other items are recommended or required for your towing situation.

**Pre-Tow Checklist**

When preparing to tow, and before driving away, be sure to check the following:

- The vehicle has been properly serviced, and the suspension, cooling system, and lights are in good operating condition.
- The trailer has been properly serviced and is in good condition.
- All weights and loads are within limits.
- The hitch, safety chains, and any other attachments are secure.
- All items in or on the trailer are properly secured and cannot shift while you drive.



*CONTINUED*

- The lights and brakes on your vehicle and the trailer are working properly.
- Your vehicle tires and spare are properly inflated, and the trailer tires and spare are inflated as recommended by the trailer maker.
- You may want to fill the fuel tank with premium fuel. Premium fuel provides improved performance.

**Driving Safely With a Trailer**

The added weight, length, and height of a trailer will affect your vehicle's handling and performance, so driving with a trailer requires some special driving skills and techniques.

For your safety and the safety of others, take time to practice driving maneuvers before heading for the open road, and follow the guidelines in this section.

***Towing Speeds and Gears***

Drive slower than normal in all driving situations, and obey posted speed limits for vehicles with trailers. Use the D position when towing a trailer on level roads. See "***Driving on Hills***" in the next column for additional gear information. Do not exceed 55 mph (88 km/h). At higher speeds, the trailer may sway or affect vehicle handling.

***Making Turns and Braking***

Make turns more slowly and wider than normal. The trailer tracks a smaller arc than your vehicle, and it can hit or run over something the vehicle misses.

Allow more time and distance for braking. Do not brake or turn suddenly as this could cause the trailer to jackknife or turn over.

***Driving on Hills***
When climbing hills, closely watch your temperature gauge. If it nears the H (Hot) mark, turn the A/C off, reduce speed and, if necessary, pull to the side of the road to let the engine cool.

When driving down hills, reduce your speed, and shift down to S position, or use the paddle shifters to the lower gear (3 and 2) in the S position. When towing a trailer, do not “ride” the brakes, and remember, it will take longer to slow down and stop when towing a trailer.

If you must stop when facing uphill, use the foot brake or parking brake. Do not try to hold the vehicle in place by pressing on the accelerator, as this can cause the automatic transmission to overheat.

***Handling Crosswinds and Buffeting***
Crosswinds and air turbulence caused by passing trucks can disrupt your steering and cause the trailer to sway. When being passed by a large vehicle, keep a constant speed, and steer straight ahead. Do not try to make quick steering or braking corrections.

***Backing Up***
Always drive slowly and have someone guide you when backing up. Grip the *bottom* of the steering wheel, then turn the wheel to the left to get the trailer to move to the left. Turn the wheel to the right to move the trailer to the right.

***Parking***
Follow all normal precautions when parking, including putting the transmission in Park and firmly setting the parking brake. Also, place wheel chocks at each of the trailer's tires.

**Towing Your Vehicle**
Your vehicle is not designed to be towed behind a motor home. If your vehicle needs to be towed in an emergency, see page 602.

### General Information

Your vehicle has been designed primarily for use on pavement. But its higher ground clearance and super handling-all wheel drive (SH-AWD) system allow you to occasionally travel on unpaved roads, to campgrounds, picnic sites, and similar locations. It is not designed for trailblazing, mountain climbing, or other challenging off-road activities.

If you decide to drive on unpaved roads, you will find that it requires somewhat different driving skills. Your vehicle will also handle somewhat differently than it does on pavement. Be sure to pay extra attention to the precautions and tips in this section, and get acquainted with your vehicle before leaving the pavement.

**⚠ WARNING**

Improperly operating this vehicle on or off-pavement can cause a crash or rollover in which you and your passengers could be seriously injured or killed.

- Follow all instructions and guidelines in this owner's manual.
- Keep your speed low, and don't drive faster than conditions permit.

### Important Safety Precautions

To avoid loss of control or rollover, be sure to follow all precautions and recommendations.

- Be sure to store cargo properly and do not exceed your cargo load limits (see page 466 and 522).
- Whenever you drive, make sure you and your passengers always wear seat belts.
- Keep your speed low, and never go faster than the conditions allow.
- It's up to you to continually assess the situation and drive within the limits.

### Check Out Your Vehicle

Before you leave the pavement, be sure to do all scheduled maintenance and service, and inspect your vehicle for any problems. Pay special attention to the condition of the tires, and check the tire pressures.

After you return to the pavement, carefully inspect your vehicle to make sure there is no damage that could make driving it unsafe. Recheck the condition of the tires and the tire pressures.

### Remember

The route presents limits (too steep or bumpy roads). You have limits (driving skill and comfort). And your vehicle has limits (traction, stability, and power).

Driving off-highway can be hazardous if you fail to recognize limits and take the proper precautions.

### Accelerating and Braking

For better traction on all surfaces, accelerate slowly and gradually build up speed. If you try to start too fast on wet soil, mud, snow, or ice, you might not have enough traction to get underway, and you may dig yourself a hole. Starting with the shift lever in the D position will help you have a smoother start on snow or ice.

Keep in mind that you will usually need more time and distance to brake to a stop on unpaved surfaces. Avoid hard braking. Do not “pump” the brakes; let the anti-lock braking system pump them for you.

### Avoiding Obstacles

Debris in the road can damage your suspension or other components. Because your vehicle has a high center of gravity, driving over a large obstacle, or allowing a wheel to drop into a deep hole can cause your vehicle to tip or roll over.

### Driving on Slopes

If you can't clearly see all conditions or obstacles on a slope, walk the slope before you drive on it. If you have any doubt whether or not you can safely drive on the slope, don't do it. Find another route.

If you are driving up a hill and find that you cannot continue, *do not try to turn around.* Your vehicle could roll over. Slowly back down the hill, following the same route you took up the hill.

### Crossing a Stream

Before driving through water, stop, get out if necessary, and make sure that:

- The water is not deep enough to cover your wheel hubs, axles, or exhaust pipe. You could stall and not be able to restart your engine. The water can also damage important vehicle components.

*CONTINUED*

- The banks are sloped so you can drive out.
- The water is not flowing too fast. Deep rushing water can sweep you downstream. Even very shallow rushing water can wash the ground from under your tires and cause you to lose traction and possibly roll over.
- The banks and surface under the water provide good traction. The water may hide hazards such as rocks, holes, or mud.

If you decide it is safe to drive through water, choose a suitable speed, and proceed without shifting, changing speeds, stopping, or shutting off the engine.

After driving through water, test your brakes. If they got wet, gently "pump" them while driving slowly until they operate normally.

If the water is deeper than the wheel hubs, some additional service may be required. This service is not covered by your warranties.

**If You Get Stuck**

If you get stuck, carefully try to go in the direction (forward or reverse) that you think will get you unstuck. Do not spin the tires at high speeds. It will not help you get out and may cause damage to the transmission or SH-AWD system.

If you are still unable to free yourself, your vehicle is equipped with front and rear tow hooks designed for this purpose.

Use a nylon strap to attach your vehicle to the recovery vehicle and carefully take out the slack in the strap. Once the strap is tight, the recovery vehicle should apply force. Remember that the recovery vehicle needs good traction to avoid becoming stuck, too.

You should never use a jack to try to get unstuck. Your vehicle could easily slip off the jack and hurt you or someone else.

This section explains why it is important to keep your vehicle well maintained and how to follow basic maintenance safety precautions.

This section also includes instructions on how to read the maintenance minder messages on the multi-information display, and instructions for simple maintenance tasks you may want to take care of yourself.

If you have the skills and tools to perform more complex maintenance tasks on your vehicle, you may want to purchase the service manual. See page 625 for information on how to obtain a copy, or see your dealer.

U.S. Vehicles: **Maintenance, replacement, or repair of emissions control devices and systems may be done by any automotive repair establishment or individual using parts that are "certified" to EPA standards.**

Maintenance Safety ..... 532
Maintenance Minder ..... 533
Fluid Locations ..... 543
Engine Compartment Cover..... 544
Adding Engine Oil ..... 545
Changing the Engine Oil and Filter ..... 546
Engine Coolant ..... 548
Windshield Washers..... 550
Automatic Transmission Fluid .... 551
Brake Fluid ..... 553
Power Steering Fluid ..... 554
Timing Belt ..... 554
Lights..... 555
Dust and Pollen Filter ..... 562
Cleaning the Seat Belts ..... 562
Floor Mats ..... 563
Wiper Blades ..... 564
Tires ..... 567
Checking the Battery ..... 573
Vehicle Storage..... 575
Interior Care ..... 576

All service items not detailed in this section should be performed by a certified technician or other qualified mechanic.

**Important Safety Precautions**
To eliminate potential hazards, read the instructions before you begin, and make sure you have the tools and skills required.

- Make sure your vehicle is parked on level ground, the parking brake is set, and the engine is off.
- To clean parts, use a commercially available degreaser or parts cleaner, not gasoline.
- To reduce the possibility of fire or explosion, keep cigarettes, sparks, and flames away from the battery and all fuel-related parts.
- Wear eye protection and protective clothing when working with the battery or compressed air.

**⚠ WARNING**

Improperly maintaining this vehicle, or failing to correct a problem before driving can cause a crash in which you can be seriously hurt or killed.

Always follow the inspection and maintenance recommendations and schedules in this owner's manual.

**Potential Vehicle Hazards**

- **Carbon Monoxide poison from engine exhaust.** Be sure there is adequate ventilation whenever you operate the engine.
- **Burns from hot parts.** Let the engine and exhaust system cool down before touching any parts.
- **Injury from moving parts.** Do not run the engine unless instructed to do so.

**⚠ WARNING**

Failure to properly follow maintenance instructions and precautions can cause you to be seriously hurt or killed.

Always follow the procedures and precautions in this owner's manual.

Some of the most important safety precautions are given here. However, we cannot warn you of every conceivable hazard that can arise in performing maintenance. Only you can decide whether or not you should perform a given task.

Your vehicle displays engine oil life and maintenance service items on the multi-information display to show you when you should have your dealer perform engine oil replacement and indicated maintenance service.

Based on the engine operating conditions and accumulated engine revolutions, the onboard computer in your vehicle calculates the remaining engine oil life and displays it as a percentage.

## Engine Oil Life Display

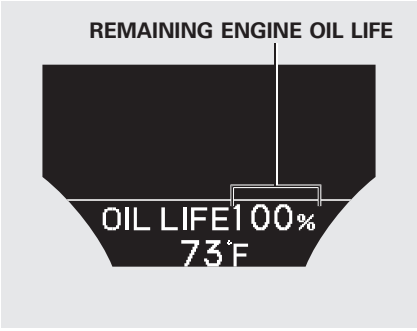


To see the current engine oil life displayed on the multi-information display, turn the ignition switch to the ON (II) position, and press the SEL/RESET button on the steering wheel repeatedly until the engine oil life is displayed.

Models equipped with the keyless access system have an engine start/stop button instead of an ignition switch. ON mode is the equivalent of ON (II). See page 196 for ignition switch and power mode comparison.



*CONTINUED*

The remaining engine oil life is shown on the multi-information display according to this table:

| Calculated Engine Oil Life (%) | Displayed Engine Oil Life (%) |
|---|---|
| 100% – 91% | 100% |
| 90% – 81% | 90% |
| 80% – 71% | 80% |
| 70% – 61% | 70% |
| 60% – 51% | 60% |
| 50% – 41% | 50% |
| 40% – 31% | 40% |
| 30% – 21% | 30% |
| 20% – 16% | 20% |
| 15% – 11% | 15% |
| 10% – 6% | 10% |
| 5% – 1% | 5% |
| 0% | 0% |

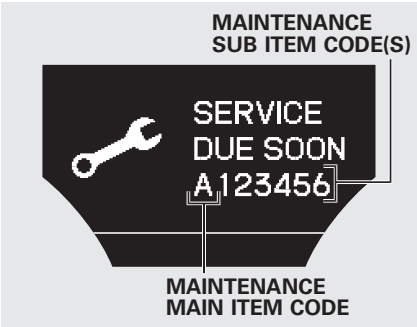


When the remaining engine oil life is 15 to 6 percent, the multi-information display shows a “SERVICE DUE SOON” message along with the maintenance item code(s) indicating the main and sub items required at the time of the oil change. Refer to page 542 for a complete list of the maintenance main items and sub items.

Pressing either INFO button (▲/▼) switches the display from the message to another display. Once you switch the display, this message will go off.

Along with the message, the system message indicator comes on (see page 69).

The message appears on the multi-information display each time you turn the ignition switch to the ON (II) position.

Models equipped with the keyless access system have an engine start/stop button instead of an ignition switch. ON mode is the equivalent of ON (II). See page for 196 ignition switch and power mode comparison.

This message reminds you that your vehicle will soon be due for scheduled maintenance.

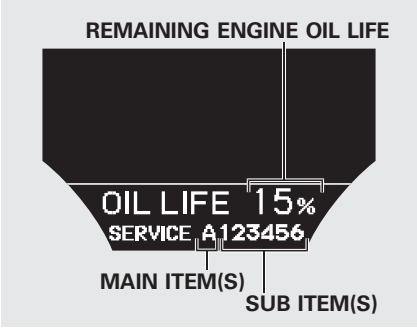


Press the SEL/RESET button on the steering wheel repeatedly to select the engine oil life information. Along with the “OIL LIFE” message, you will see the percentage of the remaining engine oil life and the maintenance item codes on the multi-information display.

When the remaining oil life is 5 to 1 percent, the multi-information display shows a “SERVICE DUE NOW” message with the same maintenance items “SERVICE DUE SOON” was displayed with. When you see this message, have the indicated maintenance performed as soon as possible.

*CONTINUED*

Pressing either INFO button (▲/▼) switches the display from the message to another display. Once you switch the display, this message will go off.

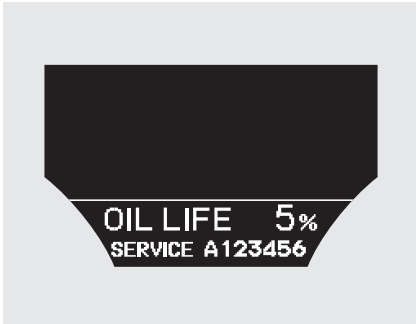


Press the SEL/RESET button on the steering wheel repeatedly to select the engine oil life. The message "SERVICE," along with "5%," and the maintenance item code are displayed on the multi-information display when the calculated engine oil life is 1 to 5 percent (see page 534).

If the indicated maintenance service is not done and the remaining engine oil life reaches 0%, the multi-information display will show the message "SERVICE PAST DUE" and the maintenance item code(s). This message is displayed when the total distance traveled is less than 10 miles (for U.S. models) or 10 km (for Canadian models) after the engine oil life became 0%.

These messages will come on every time you turn the ignition switch to the ON (II) position.

Models equipped with the keyless access system have an engine start/stop button instead of an ignition switch. ON mode is the equivalent of ON (II). See page 196 for ignition switch and power mode comparison.

Immediately have the service performed, and make sure to reset the display as described on page 539.

Pressing either INFO button (▲/▼) switches the display from the message to another display. To see the message again, press either INFO button repeatedly.

Press the SEL/RESET button on the steering wheel repeatedly to select the engine oil life. The message "SERVICE," along with "0%," and the maintenance item code are displayed on the multi-information display when the calculated engine oil life is 0 to 1 percent.

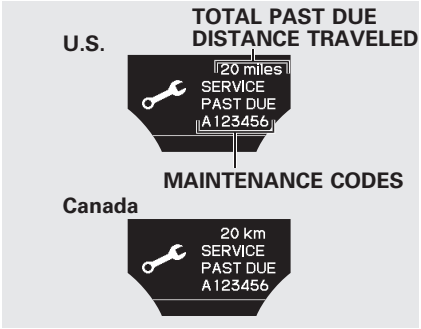


If the indicated required service is not done and the remaining engine oil life becomes 0%, the multi-information display will show a "SERVICE PAST DUE" message, the total distance traveled after the remaining oil life became 0%, and the maintenance item code(s).

*CONTINUED*

This message is displayed when you drive over 10 miles (for U.S. models) or 10 km (for Canadian models) after seeing the 0% message.

Immediately have the service performed, and make sure to reset the display as described on page 539.

Pressing either INFO button (▲/▼) switches the display from the message to another display. To see the message again, press either INFO button repeatedly.

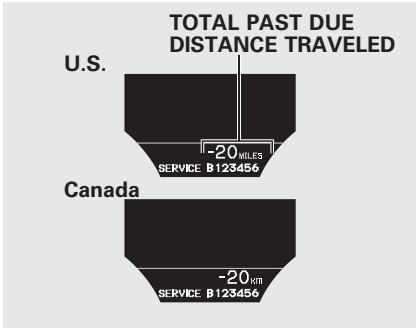


When you press the SEL/RESET button to select the engine oil life, the message "SERVICE," along with the maintenance item code(s) and the total negative distance traveled after the oil life became 0%, will be displayed on the multi-information display.

## Maintenance Main Items and Sub Items

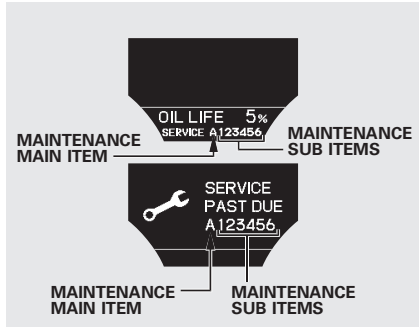


All the maintenance items displayed in the multi-information display are in code.

For an explanation of the maintenance codes, see page 542.

### Resetting the Engine Oil Life Display

Your dealer will reset the display after completing the required maintenance service. You will see "OIL LIFE 100%" on the display the next time you turn the ignition switch to the ON (II) position.

Models equipped with the keyless access system have an engine start/stop button instead of an ignition switch. ON mode is the equivalent of ON (II). See page 196 for ignition switch and power mode comparison.

If maintenance service is done by someone other than your dealer, reset the maintenance minder as follows:

1. Turn the ignition switch to the ON (II) position.
2. If the engine oil life is not displayed, press the SEL/RESET button on the steering wheel repeatedly.
3. Press and hold the SEL/RESET button on the steering wheel for more than 10 seconds. The remaining engine oil life reset mode will be shown on the multi-information display.

4. Select "RESET" by pressing the INFO (▲/▼) button, then press the SEL/RESET button to reset the engine oil life display. The maintenance item code(s) will disappear, and the engine oil life will reset to "100." If you want to cancel the oil life reset mode, select "CANCEL."

### Important Maintenance Precautions

If you have the required service done but do not reset the display, or reset the display without doing the service, the system will not show the proper maintenance intervals. This can lead to serious mechanical problems because you will no longer have an accurate record of when maintenance is needed.

*CONTINUED*

Your authorized dealer knows your vehicle best and can provide competent, efficient service. However, service at a dealer is not mandatory to keep your warranties in effect. Maintenance may be done by any qualified service facility or person who is skilled in this type of automotive service. Keep all receipts as proof of completion, and have the person who does the work fill out your Maintenance Journal or Canadian Maintenance Log. Check your warranty booklet for more information.

We recommend using Acura parts and fluids whenever you have maintenance done. These are manufactured to the same high-quality standards as the original components, so you can be confident of their performance and durability.

U.S. Vehicles:
According to state and federal regulations, failure to perform maintenance on the items marked with # will not void your emissions warranties. However, all maintenance services should be performed in accordance with the intervals indicated by the multi-information display.

**Owner's Maintenance Checks**
You should check the following items at the specified intervals. If you are unsure of how to perform any check, turn to the appropriate page listed.

- Engine oil level – Check every time you fill the fuel tank. See page 458.
- Engine coolant level – Check the radiator reserve tank every time you fill the fuel tank. See page 459.
- Automatic transmission – Check the fluid level monthly. See page 551.
- Brakes – Check the fluid level monthly. See page 553.
- Tires – Check the tire pressure monthly. Examine the tread for wear and foreign objects. See page 568.
- Lights – Check the operation of the headlights, parking lights, taillights, high-mount brake light, and license plate lights monthly. See page 555.

# Maintenance Minder

| Symbol | Maintenance Main Items |
|---|---|
| A | • **Replace engine oil**[1] |
| B | • **Replace engine oil**[1]**and oil filter**<br>• **Inspect front and rear brakes**<br>• **Check parking brake adjustment**<br>• **Inspect these items:**<br>  • **Tie rod ends, steering gear box, and boots**<br>  • **Suspension components**<br>  • **Driveshaft boots**<br>  • **Brake hoses and lines (including ABS/VSA)**<br>  • **All fluid levels and condition of fluids**<br>  • **Exhaust system**[#]<br>  • **Fuel lines and connections**[#] |

1: If the message ''SERVICE DUE NOW'' does not appear more than 12 months after the display is reset, change the engine oil every year.

#: See information on maintenance and emissions warranty on page 539.

NOTE:
- Independent of the maintenance messages in the multi-information display, replace the brake fluid every 3 years.
- Inspect idle speed every 160,000 miles (256,000 km).
- Adjust the valves during services A, B, 1, 2, or 3 if they are noisy.

| Symbol | Maintenance Sub Items |
|---|---|
| 1 | • **Rotate tires** |
| 2 | • **Replace air cleaner element**<br>If you drive in dusty conditions, replace every 15,000 miles (24,000 km).<br>• **Replace dust and pollen filter**<br>If you drive primarily in urban areas that have high concentrations of soot in the air from industry and from diesel-powered vehicles, replace every 15,000 miles (24,000 km).<br>• **Inspect drive belt** |
| 3 | • **Replace transmission and transfer fluid** |
| 4 | • **Replace spark plugs**<br>• **Replace timing belt and inspect water pump**<br>If you drive regularly in very high temperatures (over 110°F, 43°C), in very low temperatures (under −20°F, −29°C), or tow a trailer, replace every 60,000 miles (U.S.)/100,000 km (Canada).<br>• **Inspect valve clearance** |
| 5 | • **Replace engine coolant** |
| 6 | • **Replace rear differential fluid**<br>Driving in mountainous areas at very low vehicle speeds or trailer towing results in higher level of mechanical (shear) stress to fluid. This requires differential fluid changes more frequently than recommended by the maintenance minder. If you regularly drive your vehicle under these conditions, have the differential fluid changed at 7,500 miles (12,000 km), then every 15,000 miles (24,000 km). |

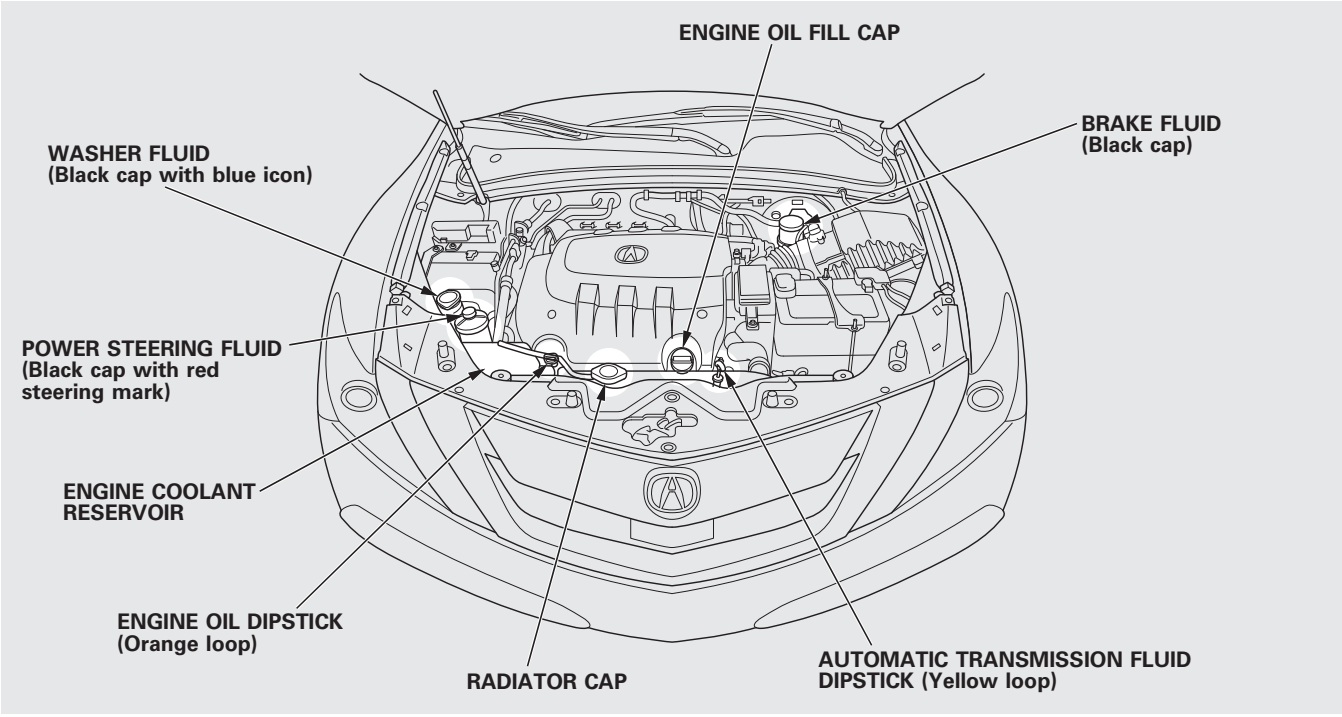
ENGINE OIL FILL CAP
BRAKE FLUID
(Black cap)
WASHER FLUID
(Black cap with blue icon)
POWER STEERING FLUID
(Black cap with red
steering mark)
ENGINE COOLANT
RESERVOIR
ENGINE OIL DIPSTICK
(Orange loop)
RADIATOR CAP
AUTOMATIC TRANSMISSION FLUID
DIPSTICK (Yellow loop)

# Engine Compartment Cover

The component parts in the engine compartment are protected by several covers. You may need to remove the cover when you perform some simple maintenance work.

To remove the covers:

1. Remove the right and left engine compartment covers by pulling them straight up.
2. Remove the holding clips with a flat-tip screwdriver and pull the front bulkhead cover straight up. When removing the cover, make sure to move the cover slightly to the left so that the hood latch handle does not get in the way.

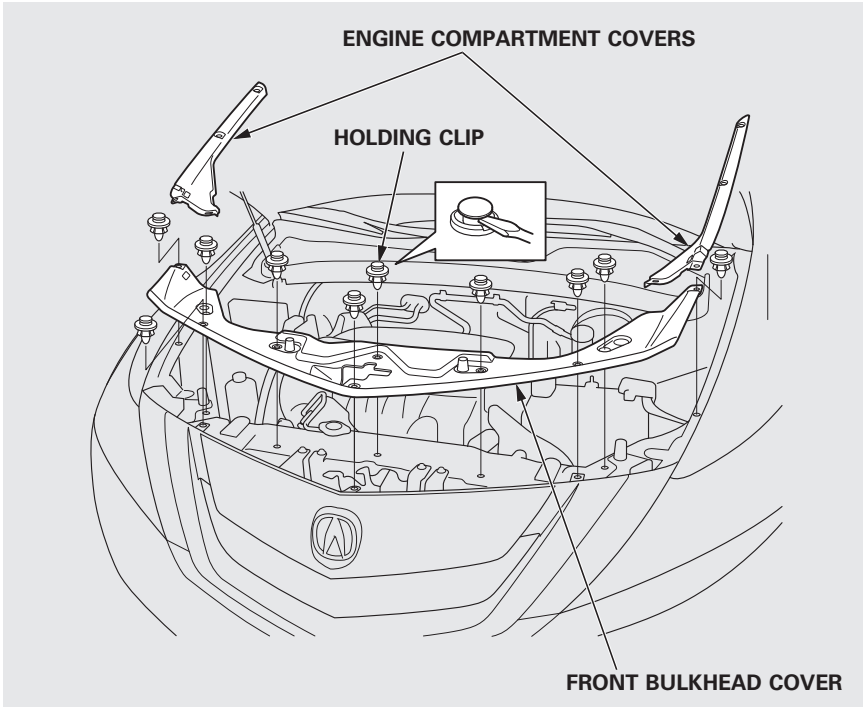

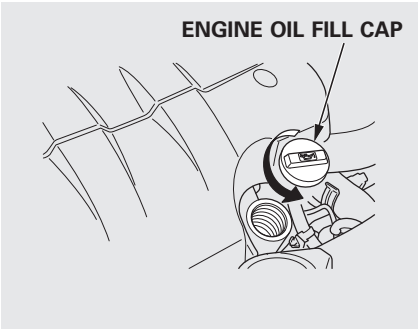


Unscrew and remove the engine oil fill cap on top of the valve cover. Pour in the oil slowly and carefully so you do not spill. Clean up any spills immediately. Spilled oil could damage components in the engine compartment.

Reinstall the engine oil fill cap, and tighten it securely. Wait a few minutes, and recheck the oil level on the engine oil dipstick. Do not fill above the upper mark; you could damage the engine.

**Recommended Engine Oil**

Oil is a major contributor to your engine's performance and longevity. Always use a premium-grade 5W-20 detergent oil displaying the API Certification Seal. This seal indicates the oil is energy conserving, and that it meets the American Petroleum Institute's latest requirements. It is highly recommended that you use Acura motor oil in your vehicle. Make sure the API Certification Seal says “For Gasoline Engines.”

API CERTIFICATION SEAL

The oil viscosity or weight is provided on the container's label. 5W-20 oil is formulated for year-round protection of your vehicle to improve cold weather starting and fuel economy.

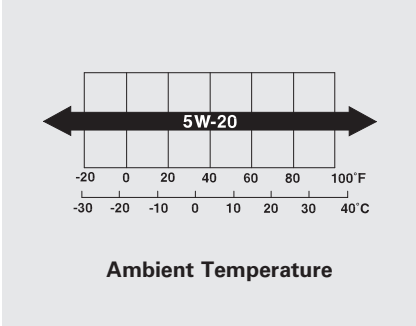


*CONTINUED*

**Synthetic Oil**
You may use a synthetic motor oil if it meets the same requirements given for a conventional motor oil: it displays the API Certification Seal and it is the proper weight. You must follow the oil and filter change intervals shown on the multi-information display.

**Engine Oil Additives**
Your vehicle does not require any oil additives. Additives may adversely affect the engine or transmission performance and durability.

**Changing the Engine Oil and Filter**
Always change the oil and filter according to the maintenance messages shown on the multi-information display. The oil and filter collect contaminants that can damage your engine if they are not removed regularly.

Changing the oil and filter requires special tools and access from underneath the vehicle. The vehicle should be raised on a service station-type hydraulic lift for this service. Unless you have the knowledge and proper equipment, you should have this maintenance done by a skilled mechanic.

1. Run the engine until it reaches normal operating temperature, then shut it off.

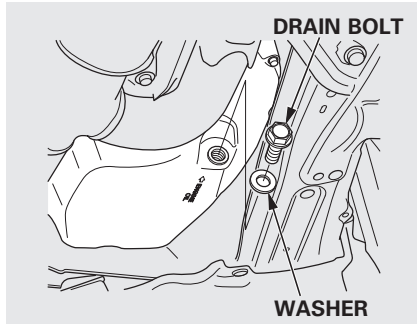


2. Open the hood, and remove the engine oil fill cap. Remove the oil drain bolt and washer from the bottom of the engine. Drain the oil into an appropriate container.

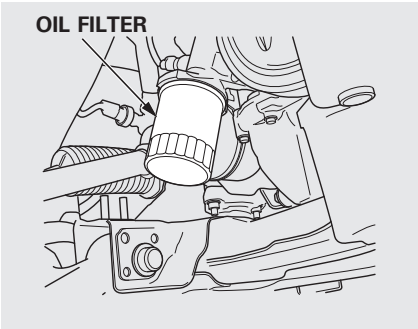


3. Remove the oil filter, and let the remaining oil drain. A special wrench (available from your dealer) is required.

   Make sure the oil filter gasket is not stuck to the engine block. If it is, remove it before installing a new oil filter.

4. Install a new oil filter according to the instructions that come with it.

   Make sure to clean off any dirt and dust on the connecting surface of a new oil filter.

5. Put a new washer on the drain bolt, then reinstall the drain bolt. Tighten the drain bolt to:
   29 lbf·ft (39.2 N·m, 4.0 kgf·m)

6. Refill the engine with the recommended oil.

   Engine oil change capacity (including filter):
   4.5 US qt (4.3 L)

7. Reinstall the engine oil fill cap. Start the engine. The oil pressure indicator should go out within 5 seconds. If it does not, turn off the engine, and check your work.

8. Let the engine run for several minutes, then check the drain bolt and oil filter for leaks.

9. Turn off the engine and let it sit for several minutes, then check the oil level on the dipstick. If necessary, add more oil.

**NOTICE**

*Improper disposal of engine oil can be harmful to the environment. If you change your own oil, please dispose of the used oil properly. Put it in a sealed container, and take it to a recycling center. Do not discard it in a trash bin or dump it on the ground.*

### Adding Engine Coolant

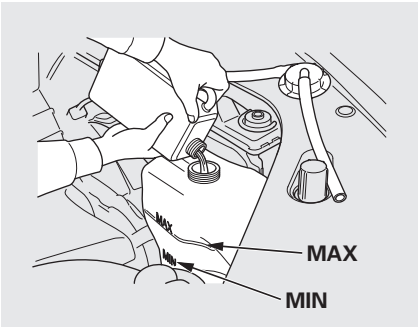


If the coolant level in the reserve tank is at or below the MIN line, add coolant to bring it up to the MAX line. Inspect the cooling system for leaks.

Always use Honda Long-life Anti-freeze/Coolant Type 2. This coolant is pre-mixed with 50 percent antifreeze and 50 percent water. Never add straight antifreeze or plain water.

If Honda antifreeze/coolant is not available, you may use another major-brand non-silicate coolant as a temporary replacement. Make sure it is a high-quality coolant recommended for aluminum engines. Continued use of any non-Honda coolant can result in corrosion, causing the cooling system to malfunction or fail. Have the cooling system flushed and refilled with Honda antifreeze/coolant as soon as possible.

If the reserve tank is completely empty, you should also check the coolant level in the radiator.

**⚠ WARNING**

Removing the radiator cap while the engine is hot can cause the coolant to spray out, seriously scalding you.

Always let the engine and radiator cool down before removing the radiator cap.

1. Make sure the engine and radiator are cool.
2. Relieve any pressure in the cooling system by turning the radiator cap counterclockwise, without pressing down.

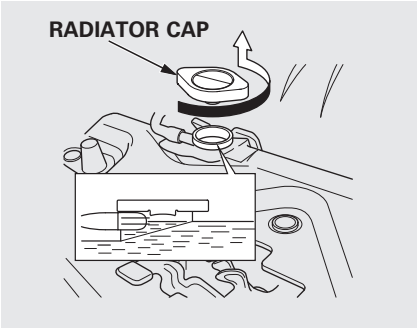


3. Remove the radiator cap by pushing down and turning counterclockwise.
4. The coolant level should be up to the base of the filler neck. Add coolant if it is low.

   Pour the coolant slowly and carefully so you do not spill any. Clean up any spill immediately; it could damage components in the engine compartment.
5. Put the radiator cap back on, and tighten it fully.



*CONTINUED*

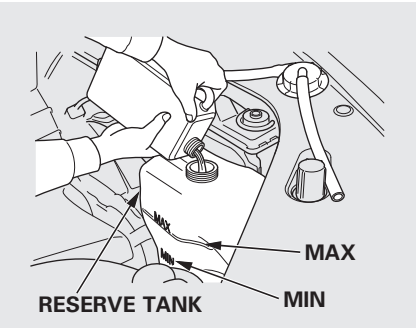


6. Pour coolant into the reserve tank. Fill it to halfway between the MAX and MIN marks. Put the cap back on the reserve tank.

Do not add any rust inhibitors or other additives to your vehicle's cooling system. They may not be compatible with the coolant or engine components.

**Windshield Washers**

Check and fill the windshield washer reservoir according to the warning message on the multi-information display.

If the washer fluid is low, a “LOW WASHER FLUID” message appears on the multi-information display.

Fill the reservoir with a good-quality windshield washer fluid. This increases the cleaning capability and prevents freezing in cold weather.

When you refill the reservoir, clean the edges of the windshield wiper blades with windshield washer fluid on a clean cloth. This will help to condition the blade edges.

**NOTICE**

*Do not use engine antifreeze or a vinegar/water solution in the windshield washer reservoir. Antifreeze can damage your vehicle's paint, while a vinegar/water solution can damage the windshield washer pump. Use only commercially-available windshield washer fluid.*

Check the fluid level with the engine at normal operating temperature.

1. Park the vehicle on level ground. Start the engine, let it run until the radiator fan comes on, then shut off the engine. For accurate results, wait about 60 seconds (but no longer than 90 seconds) before doing step 2.

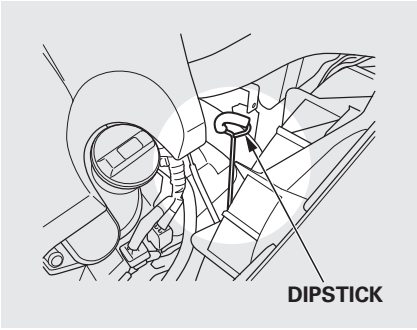


2. Remove the dipstick (yellow loop) from the transmission, and wipe it with a clean cloth.

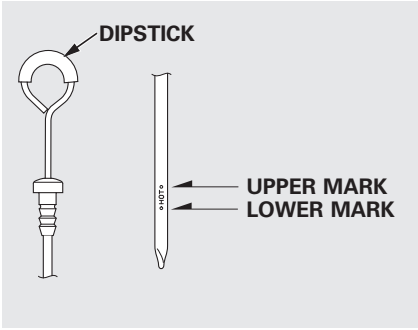


3. Insert the dipstick all the way into the transmission securely as shown in the illustration.
4. Remove the dipstick and check the fluid level. It should be between the upper and lower marks.

*CONTINUED*

5. If the level is below the lower mark, add fluid into the dipstick hole to bring it to the level between the upper and lower marks.

   Pour the fluid slowly and carefully so you do not spill any. Clean up any spill immediately; it could damage components in the engine compartment.

   Always use Acura ATF-Z1 (automatic transmission fluid.)

6. Insert the dipstick all the way back into the transmission securely as shown in the illustration.

   Make sure the rubber cap on the dipstick fits in the dipstick guide and that you push the dipstick in all the way.

The transmission should be drained and refilled with new fluid when this service is shown on a maintenance message in the multi-information display.

If you are not sure how to add fluid, contact your dealer.

**NOTICE**

*Use only Acura ATF-Z1 (automatic transmission fluid). Do not mix with other transmission fluids.*
*Using transmission fluid other than Acura ATF-Z1 may cause deterioration in transmission operation and durability, and could result in damage to the transmission.*
*Damage resulting from the use of transmission fluid other than Acura ATF-Z1 is not covered by the Acura new vehicle warranty.*

Check the fluid level in the brake fluid reservoir monthly.

You will also see the “LOW BRAKE FLUID” message on the multi-information display when the brake fluid level is low.

Independent of the maintenance minder display, replace the brake fluid every 3 years.

Always use Honda Heavy Duty Brake Fluid DOT 3. If it is not available, you should use only DOT 3 or DOT 4 fluid, from a sealed container, as a temporary replacement.

Using any non-Honda brake fluid can cause corrosion and decrease the life of the system. Have the brake system flushed and refilled with Honda Heavy Duty Brake Fluid DOT 3 as soon as possible.

Brake fluid marked DOT 5 is not compatible with your vehicle's braking system and can cause extensive damage.

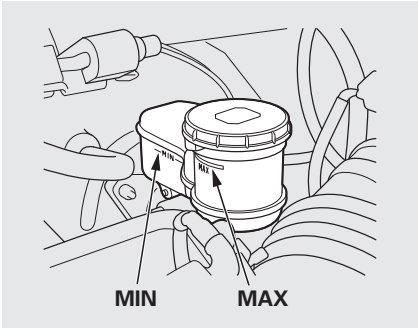


The fluid level should be between the MIN and MAX marks on the side of the reservoir. If the level is at or below the MIN mark, your brake system needs attention. Have the brake system inspected for leaks or worn brake pads.

## Power Steering Fluid

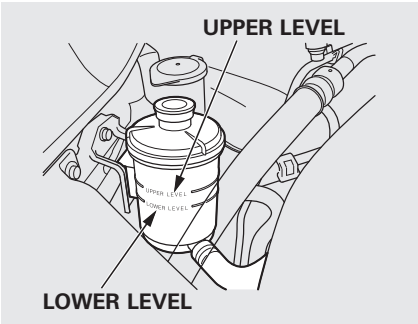


Check the level on the side of the reservoir when the engine is cold. The fluid should be between the UPPER LEVEL and LOWER LEVEL. If not add power steering fluid to the UPPER LEVEL mark.

Pour the fluid slowly and carefully so you do not spill any. Clean up any spills immediately; it could damage components in the engine compartment.

Always use Acura Power Steering Fluid. You may use another power steering fluid as an emergency replacement, but have the power steering system flushed and refilled with Acura PSF as soon as possible.

A low power steering fluid level can indicate a leak in the system. Check the fluid level frequently, and have the system inspected as soon as possible.

If you are not sure how to add fluid, contact your dealer.

**NOTICE**

*Turning the steering wheel to full left or right lock and holding it there can damage the power steering pump.*

## Timing Belt

The timing belt should be replaced at the intervals shown in the maintenance minder schedule.

Replace the timing belt every 60,000 miles (U.S.) or every 100,000 km (Canada) if you regularly drive your vehicle in any of the following conditions:

- In very high temperatures (over 110°F, 43°C).
- In very low temperatures (under −20°F, −29°C).
- Frequently tow a trailer.

### Headlight Aiming

The headlights were properly aimed when your vehicle was new. If you regularly carry heavy items in the cargo area or pull a trailer, readjustment may be required. Adjustments should be done by your dealer or another qualified technician.

### Low/High Beam Headlight Bulb Replacement

The low/high beam headlight bulbs are a type of high voltage discharge tube. High voltage can remain in the circuit even with the light switch off and the key removed (or the vehicle is in VEHICLE OFF (LOCK) mode on models with keyless access system). Because of this, you should not attempt to examine or change a low/high beam headlight bulb yourself. If a low/high beam headlight bulb fails, take the vehicle to your dealer to have it replaced.

### Replacing Front Turn Signal/ Parking and Side Marker Light Bulbs

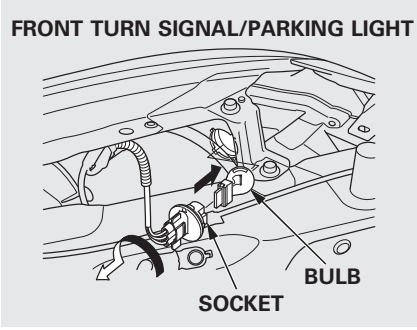


1. Open the hood.
2. Remove the front bulkhead cover and engine compartment covers (see page 544).
3. Remove the socket by turning it one-quarter turn counterclockwise.
4. Pull the bulb straight out of its socket.

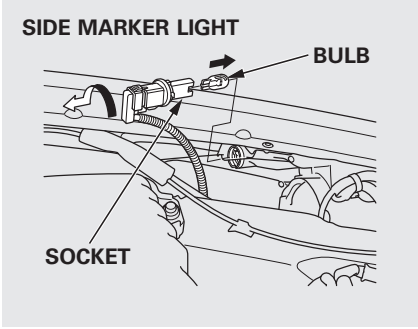


5. Push the new bulb straight into the socket until it bottoms.
6. Insert the socket back into the headlight assembly. Turn it clockwise to lock it in place.
7. Turn on the lights to make sure the new bulb is working.

*CONTINUED*

## Replacing a Daytime Running Light Bulb

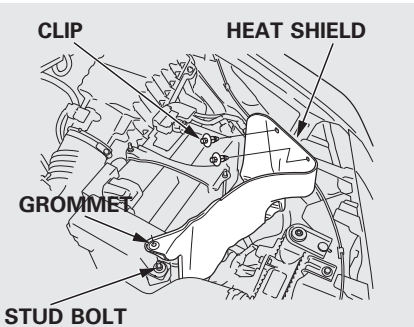


1. Open the hood.

   To change the bulb on the driver's side, remove the clips by pushing the center of the clips. Lift the grommet over the stud bolt and rotate the heat shield counterclockwise.

   To change the bulb on the passenger's side, remove the power steering fluid reservoir by pulling it out of its stay.

2. Remove the front bulkhead cover and engine compartment covers (see page 544).

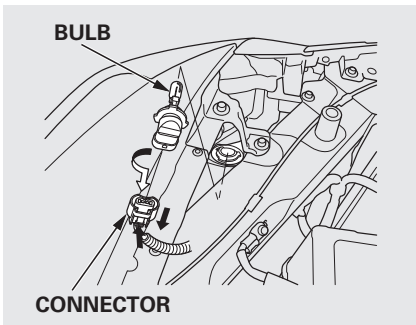


3. Remove the electrical connector from the bulb by pushing on the tab and pulling the connector down.
4. Remove the bulb by turning it one-quarter turn counterclockwise.
5. Install the new bulb into the hole, and turn it one-quarter turn clockwise to lock it in place.
6. Push the electrical connector back onto the bulb. Make sure it is on all the way.
7. Test the lights to make sure the new bulb is working.
8. Reinstall the front bulkhead cover and engine compartment covers.

   *On the driver's side*
   Reinstall the heat shield.

   *On the passenger's side*
   Reinstall the power steering fluid reservoir.

**Replacing Front Fog Light Bulbs**
Your vehicle uses halogen light bulbs. When replacing a bulb, handle it by its plastic case, and protect the glass from contact with your skin or hard objects. If you touch the glass, clean it with denatured alcohol and a clean cloth.

**NOTICE**

*Halogen bulbs get very hot when lit. Oil, perspiration, or a scratch on the glass can cause the bulb to overheat and shatter.*

The fog lights were properly aimed when your vehicle was new. If you regularly carry heavy items in the cargo area or pull a trailer, readjustment may be required. Adjustment should be done by your dealer or other qualified technician.

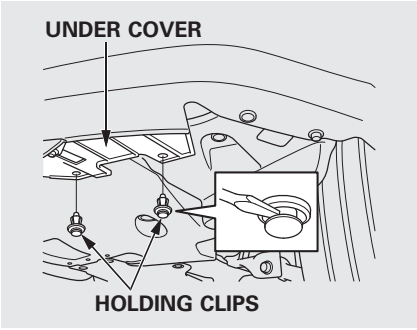


1. Remove the two holding clips with a flat-tip screwdriver.
2. Pull down the under cover from the bumper carefully.

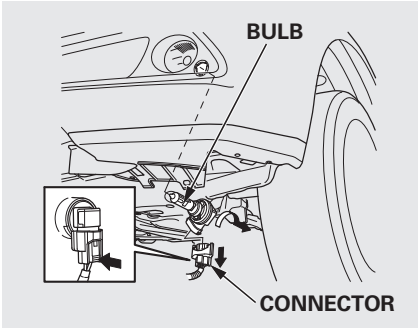


3. Remove the electrical connector from the bulb by pushing on the tab and pulling the connector down.
4. Remove the bulb from the fog light assembly by turning it one-quarter turn counterclockwise.
5. Install the new bulb into the hole and turn it one-quarter turn clockwise to lock it in place.

*CONTINUED*

6. Push the electrical connector back onto the bulb. Make sure it is on all the way.
7. Turn on the fog lights to test the new bulb.
8. Reinstall the holding clips, and push in the head of each clip.

## Replacing Rear Bulbs (in Rear Pillar)

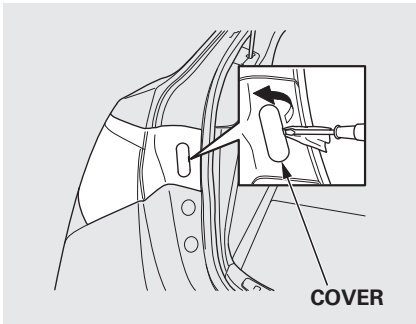


1. Open the tailgate. Use a flat-tip screwdriver protected with a cloth to prevent scratches and pry open the cover.

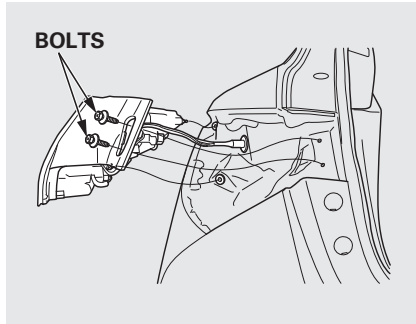


2. Remove the two bolts, and remove the rear light assembly from the rear pillar.
3. Determine which of the three bulbs is burned out: stop/taillight, rear side marker, or turn signal light.

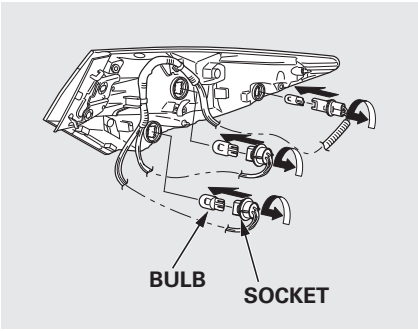


4. Remove the socket by turning it one-quarter turn counterclockwise.
5. Pull the bulb straight out of its socket.
6. Push the new bulb straight into the socket until it bottoms.
7. Turn on the lights to make sure the new bulb is working.
8. Put the socket back into the light assembly, and turn it clockwise to lock it in place.
9. Install the rear light assembly in the rear pillar. Tighten the two bolts. Snap the bolt covers into position.

## Replacing a Back-up Light Bulb

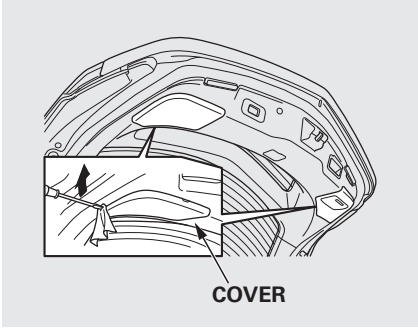


1. Open the tailgate. Place a cloth on the edge of the light assembly cover to prevent scratches. Remove the cover by carefully prying in the notch on its middle edge with a flat-tip screwdriver.

*CONTINUED*

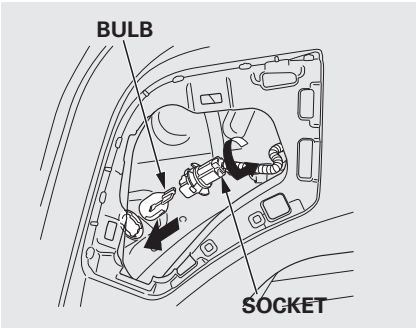


2. Remove the socket by turning it one-quarter turn counterclockwise.
3. Pull the bulb straight out of its socket.
4. Push the new bulb straight into the socket until it bottoms.
5. Turn on the lights to make sure the new bulb is working.
6. Put the socket back into the light assembly, and turn it clockwise to lock it in place.
7. Place the cover back into the light assembly. Push it up until it locks in place.

## Replacing a Rear License Plate Bulb

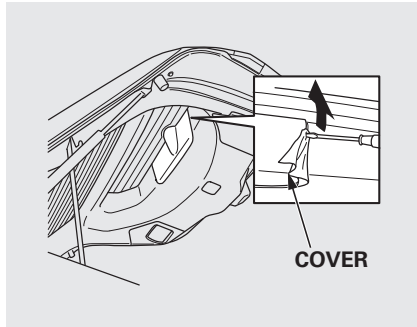


1. Open the tailgate. Place a cloth on the edge of the light assembly cover to prevent scratches. Remove the cover by carefully prying in the notch on its edge with a flat-tip screwdriver.

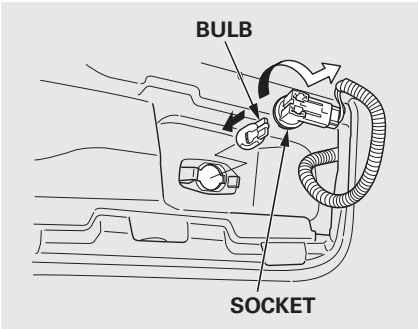


2. Remove the socket by turning it one-quarter turn clockwise.
3. Pull the bulb straight out of its socket.
4. Push the new bulb straight into the socket until it bottoms.
5. Turn on the lights to make sure the new bulb is working.
6. Put the socket back into the light assembly, and turn it counterclockwise to lock it in place.
7. Place the cover back into the light assembly. Push it up until it locks in place.

**Side Turn Signal Light**
Each outside mirror has side turn signal lights. The lights should be replaced by your dealer.

**High-mount Brake Light**
The high-mount brake light should be replaced by your dealer.

## Dust and Pollen Filter

This filter removes the dust and pollen that is brought in from the outside through the climate control system.

Have your dealer replace the filter when this service is indicated by a maintenance message on the multi-information display. It should be replaced every 15,000 miles (24,000 km) if you drive primarily in urban areas that have high concentrations of soot in the air, or if the flow from the climate control system becomes less than usual.

## Cleaning the Seat Belts

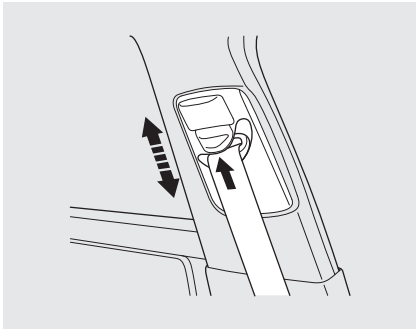

If your seat belts get dirty, use a soft brush with a mixture of mild soap and warm water to clean them. Do not use bleach, dye, or cleaning solvents. Let the belts air-dry before you use the vehicle.

Dirt build-up around the openings of the seat belt anchors can cause the belts to retract slowly. Wipe the openings with a clean cloth dampened in mild soap and warm water or isopropyl alcohol.

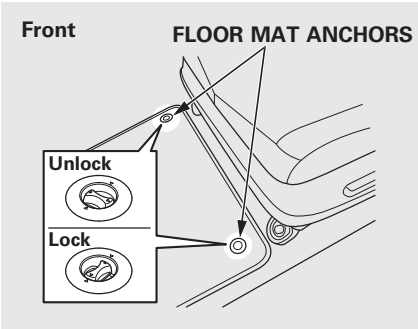


The floor mats that came with your vehicle hook over the floor mat anchors. This keeps the floor mats from sliding forward (possibly interfering with the pedals) or backwards (making the front passenger's weight sensors ineffective).

To lock or unlock each anchor, turn the knob.

If you remove a floor mat, make sure to re-anchor it when you put it back in your vehicle.

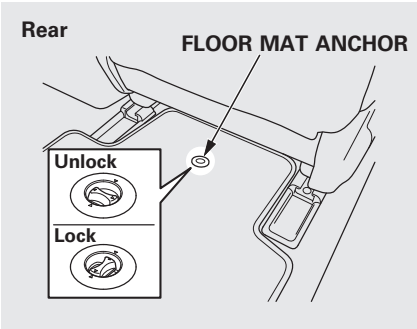


If you use a non-Acura floor mat, make sure it fits properly and that it can be used with the floor mat anchors. Do not put additional floor mats on top of the anchored mats.

Make sure the rear floor mats are also properly hooked. If not, the floor mat will prevent the seat operation and make the front passenger's weight sensors ineffective.

The floor mat carpets are loop-type construction. If snags occur from sharp or rough objects, do not pull the loose threads to remove them. Cut all loose threads with a scissors to prevent carpet runs.

Check the condition of the wiper blades at least every 6 months. Replace them if you find signs of cracking in the rubber, and areas that are getting hard or if they leave streaks and unwiped areas when used.

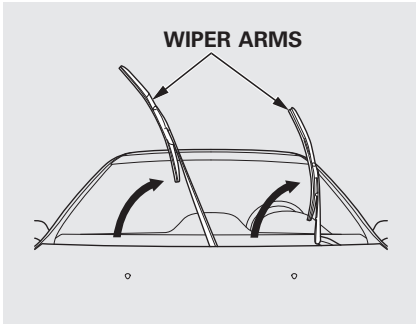


To replace a wiper blade:

1. Raise each wiper arm off the windshield, lifting the driver's side first, then the passenger's side.

**NOTICE**

*Do not open the hood when the wiper arms are raised, or you will damage the hood and the wiper arms.*

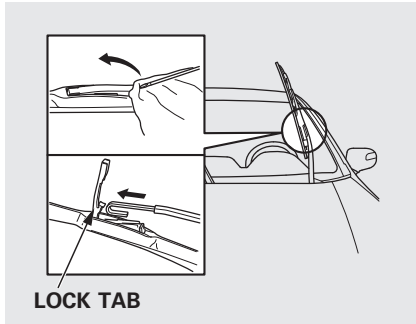


2. Disconnect the blade assembly from the wiper arm:
   - Put a cloth on the edge of the lock tab to prevent scratches, then push up on the lock tab carefully with a flat-tip screwdriver.
   - Slide the blade assembly toward the wiper arm until it releases from the wiper arm.

When replacing a wiper blade, make sure not to drop the wiper blade or wiper arm down on the windshield.

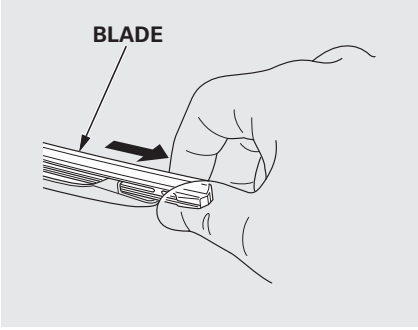


3. Remove the blade from its holder by grabbing the tabbed end of the blade. Pull firmly until the tabs come out of the holder.

4. Examine the new wiper blades. If they have no plastic or metal reinforcement along the back edge, remove the metal reinforcement strips from the old wiper blade, and install them in the slots along the edge of the new blade.

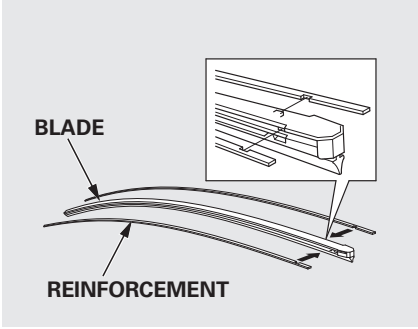


Make sure the two rubber tabs inside the blade fit to each notch of the reinforcement, as shown.

*CONTINUED*

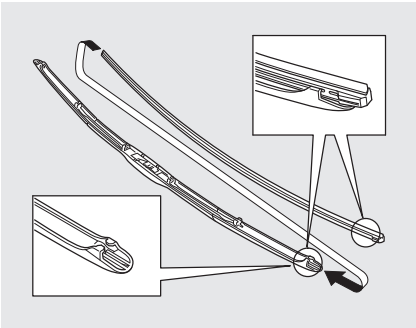

5. Place the top of the wiper blade on the end of the blade assembly, and slide the blade onto the assembly in the direction pointed to by the arrow.

   Make sure the tab on the blade assembly fits in the indent of the wiper blade and the blade is completely installed.

6. Slide the wiper blade assembly onto the wiper arm, then rotate the lock tab toward the arm until it snaps into place.

7. Lower the wiper arm against the window.
   Windshield: Lower the passenger's side first, then the driver's side.

To safely operate your vehicle, your tires must be the proper type and size, in good condition with adequate tread, and correctly inflated.

The following pages give more detailed information on how to take care of your tires and what to do when they need to be replaced.

**⚠ WARNING**

Using tires that are excessively worn or improperly inflated can cause a crash in which you can be seriously hurt or killed.

Follow all instructions in this owner's manual regarding tire inflation and maintenance.

**Inflation Guidelines**

Keeping the tires properly inflated provides the best combination of handling, tread life, and riding comfort.

- Underinflated tires wear unevenly, adversely affect handling and fuel economy, and are more likely to fail from being overheated.
- Overinflated tires can make your vehicle ride more harshly, are more prone to damage from road hazards, and wear unevenly.

The tire pressure monitoring system (TPMS) warns you when a tire pressure is low. See page 490 for more information.

Even though your vehicle is equipped with TPMS, we recommend that you visually check your tires every day. If you think a tire might be low, check it immediately with a tire gauge.

Use a gauge to measure the air pressure in each tire at least once a month. Even tires that are in good condition may lose 1 to 2 psi (10 to 20 kPa, 0.1 to 0.2 kgf/cm$^2$) per month. Remember to check the spare tire at the same time.



*CONTINUED*

Check the air pressures when the tires are cold. This means the vehicle has been parked for at least 3 hours, or driven less than 1 mile (1.6 km). Add or release air, if needed, to match the recommended cold tire pressures.

If you check air pressures when the tires are hot [driven for several miles (kilometers)], you will see readings 4 to 6 psi (30 to 40 kPa, 0.3 to 0.4 kgf/cm²) higher than the cold readings. This is normal. Do not let air out to match the recommended cold air pressure. The tire will be underinflated.

While tubeless tires have some ability to self-seal if they are punctured, you should look closely for punctures if a tire starts losing pressure.

You should get your own tire pressure gauge and use it whenever you check your tire pressures. This will make it easier for you to tell if a pressure loss is due to a tire problem and not due to a variation between gauges.

**Recommended Tire Pressures**

The following chart shows the recommended cold tire pressures for most normal driving conditions.

| Tire Size | Cold Tire Pressure for Normal Driving |
|---|---|
| P255/50R19 103H | Front/Rear:<br>32 psi (220 kPa, 2.2 kgf/cm²) |

The compact spare tire pressure is: 60 psi (420 kPa, 4.2 kgf/cm²)

For convenience, the recommended tire sizes and cold tire pressures are on a label on the driver's doorjamb.

For additional information about your tires, see page 610.

## Tire Inspection

Every time you check inflation, you should also examine the tires for damage, foreign objects, and wear.

You should look for:

- Bumps or bulges in the tread or side of the tire. Replace the tire if you find either of these conditions.
- Cuts, splits, or cracks in the side of the tire. Replace the tire if you can see fabric or cord.
- Excessive tread wear.

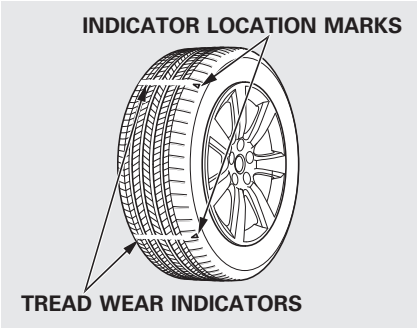


Your tires have wear indicators molded into the tread. When the tread wears down, you will see a 1/2 inch (12.7 mm) wide band across the tread. This shows there is less than 1/16 inch (1.6 mm) of tread left on the tire.

A tire this worn gives very little traction on wet roads. You should replace the tire if you can see three or more tread wear indicators.

## Tire Service Life

The service life of your tires is dependent on many factors, including, but not limited to, driving habits, road conditions, vehicle loading, inflation pressure, maintenance history, speed, and environmental conditions (even when the tires are not in use).

In addition to your regular inspections and inflation pressure maintenance, it is recommended that you have annual inspections performed once the tires reach five years old. It is also recommended that all tires, including the spare, be removed from service after 10 years from the date of manufacture, regardless of their condition or state of wear.

The last four digits of the TIN (tire identification number) are found on the sidewall of the tire and indicate the date of manufacture (See **Tire Labeling** on page 612).

*CONTINUED*

## Tire Maintenance

In addition to proper inflation, correct wheel alignment helps to decrease tire wear. If you find a tire is worn unevenly, have your dealer check the wheel alignment.

Have your dealer check the tires if you feel a consistent vibration while driving. A tire should always be rebalanced if it is removed from the wheel. When you have new tires installed, make sure they are balanced. This increases riding comfort and tire life. For best results, have the installer perform a dynamic balance.

**NOTICE**

*Improper wheel weights can damage your vehicle's aluminum wheels. Use only Acura wheel weights for balancing.*

## Tire Rotation

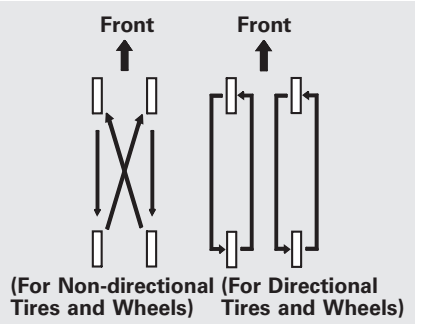


To help increase tire life and distribute wear more evenly, rotate the tires according to the maintenance messages displayed on the multi-information display. Move the tires to the positions shown in the illustration each time they are rotated. If you purchase directional tires, rotate only front-to-back.

When the tires are rotated, make sure the air pressures are checked.

## Replacing Tires and Wheels

Replace your tires with radial tires of the same size, load range, speed rating, and maximum cold tire pressure rating (as shown on the tire's sidewall).

Mixing radial and bias-ply tires on your vehicle can reduce braking ability, traction, and steering accuracy. Using tires of a different size or construction can cause the ABS and vehicle stability assist system (VSA) to work inconsistently.

The ABS and VSA system work by comparing the speed of the wheels. When replacing tires, use the same size originally supplied with the vehicle. Tire size and construction can affect wheel speed and may cause the system to activate.

It is best to replace all four tires at the same time. If that is not possible or necessary, replace the two front tires or two rear tires as a pair. Replacing just one tire can seriously affect your vehicle's handling.

If you ever replace a wheel, make sure that the wheel's specifications match those of the original wheels.

Also be sure you use only TPMS specific wheels. If you do not, the tire pressure monitoring system will not work.

Replacement wheels are available at your dealer.

**⚠WARNING**

Installing improper tires on your vehicle can affect handling and stability. This can cause a crash in which you can be seriously hurt or killed.

Always use the size and type of tires recommended in this owner's manual.

### Wheel and Tire Specifications

Wheel:
19 x 8.5 J

Tires:
P255/50R19 103H

See page 610 for information about DOT Tire Quality Grading, and page 612 for tire size and labeling information.

### Winter Driving

Tires marked “M + S” or “All Season” on the sidewall have an all-weather tread design suitable for most winter driving conditions.

For the best performance in snowy or icy conditions, you should install snow tires or tire chains. They may be required by local laws under certain conditions.

### Snow Tires

If you mount snow tires on your vehicle, make sure they are radial tires of the same size and load range as the original tires. Mount snow tires on all four wheels. The traction provided by snow tires on dry roads may be lower than your original tires. Check with the tire dealer for maximum speed recommendations.

*CONTINUED*

### Tire Chains

Mount tire chains on your tires when required by driving conditions or local laws. Install them only on the front tires.

Because your vehicle has limited tire clearance, Acura strongly recommends using the chains listed below.

SCC Super Z-6 # SZ 435

When installing chains, follow the manufacturer's instructions and mount them as tightly as you can. Drive slowly with chains installed. If you hear them contacting the body or chassis, stop and investigate. Make sure the chains are installed tightly, and that they are not contacting the brake lines or suspension. Remove the chains as soon as you start driving on cleared roads.

**⚠ WARNING**

Using the wrong chains, or not properly installing chains, can damage the brake lines and cause a crash in which you can be seriously injured or killed.

Follow all instructions in this owner's manual regarding the selection and use of tire chains.

**NOTICE**

*Traction devices that are the wrong size or improperly installed can damage your vehicle's brake lines, suspension, body, and wheels. Stop driving if they are hitting any part of the vehicle.*

### Wheels

Clean the wheels as you would the rest of the exterior. Wash them with the same solution, and rinse them thoroughly.

Aluminum alloy wheels have a protective clear-coat that keeps the aluminum from corroding and tarnishing. Cleaning the wheels with harsh chemicals (including some commercial wheel cleaners) or a stiff brush can damage the clear-coat. To clean the wheels, use a mild detergent and a soft brush or sponge.

The sensor on the negative terminal monitors your vehicle's battery condition.

If there is a problem with the sensor, you will see a “CHECK BATTERY SENSOR” message on the multi-information display. Have the vehicle checked by your dealer.

Check the terminals for corrosion (a white or yellowish powder). To remove it, cover the terminals with a solution of baking soda and water. It will bubble up and turn brown. When this stops, wash it off with plain water. Dry off the battery with a cloth or paper towel. Coat the terminals with grease to help prevent further corrosion.

If additional battery maintenance is needed, see your dealer or a qualified technician.

**WARNING:** Battery posts, terminals, and related accessories contain lead and lead compounds. **Wash your hands after handling.**

If you need to connect the battery to a charger, disconnect both cables to prevent damaging your vehicle's electrical system. Always disconnect the negative (−) cable first, and reconnect it last.

**⚠WARNING**

The battery gives off explosive hydrogen gas during normal operation.

A spark or flame can cause the battery to explode with enough force to kill or seriously hurt you.

Wear protective clothing and a face shield, or have a skilled technician do the battery maintenance.

If your vehicle's battery is disconnected or goes dead, the audio system may disable itself. The next time you turn on the radio, you will see “ENTER CODE” in the frequency display. Use the preset buttons to enter the code (see page 374).

*CONTINUED*

*On models with navigation system*
The navigation system will also disable itself. The next time you select the ON mode by operating the engine start/stop button (see page 194), the system will require you to enter a PIN before it can be used. Refer to the navigation system manual.

If you need to park your vehicle for an extended period (more than 1 month), there are several things you should do to prepare it for storage. Proper preparation helps prevent deterioration and makes it easier to get your vehicle back on the road. If possible, store your vehicle indoors.

- Fill the fuel tank.
- Wash and dry the exterior completely.
- Clean the interior. Make sure the carpeting, floor mats, etc., are completely dry.
- Leave the parking brake off. Put the transmission in Park.
- Block the rear wheels.
- If the vehicle is to be stored for a longer period, it should be supported on jackstands so the tires are off the ground.
- Leave one window open slightly (if the vehicle is being stored indoors).
- Disconnect the battery.
- Support the front and rear wiper blade arms with a folded towel or rag so they do not touch the windshield.
- To minimize sticking, apply a silicone spray lubricant to all door and tailgate seals. Also, apply a vehicle body wax to the painted surfaces that mate with the door and tailgate seals.
- Cover the vehicle with a “breathable” cover, one made from a porous material such as cotton. Non-porous materials, such as plastic sheeting, trap moisture, which can damage the paint.
- If possible, periodically run the engine until it reaches full operating temperature (the cooling fans cycle on and off twice). Preferably, do this once a month.

**Leather**
Vacuum dirt and dust from the leather frequently. Pay particular attention to the pleats and seams. Clean the leather with a soft cloth dampened with water solution of approximately 10% neutral wool detergent, then buff it with a clean, dry cloth. Remove any dust or dirt on leather surfaces immediately.

This section covers the more common problems that motorists experience with their vehicles. It gives you information about how to safely evaluate the problem and what to do to correct it. If the problem has stranded you on the side of the road, you may be able to get going again. If not, you will also find instructions on getting your vehicle towed.

Compact Spare Tire ..... 578
Changing a Flat Tire ..... 579
If the Engine Won't Start..... 585
Jump Starting..... 587
If the Engine Overheats ..... 589
Low Oil Pressure Indicator ..... 591
Charging System Indicator ..... 592
Malfunction Indicator Lamp..... 593
Brake System Indicator..... 594
Fuses ..... 595
Fuse Locations..... 599
Opening the Fuel Fill Door Manually..... 602
Emergency Towing..... 602
If Your Vehicle Gets Stuck ..... 603

Use the compact spare tire as a temporary replacement only. Get your regular tire repaired or replaced, and put it back on your vehicle as soon as you can.

Check the inflation pressure of the compact spare tire every time you check the other tires. It should be inflated to:
60 psi (420 kPa, 4.2 kgf/cm$^2$)

Follow these precautions:

- Never exceed 50 mph (80 km/h).
- This tire gives a harsher ride and less traction on some road surfaces. Use greater caution while driving.
- Do not mount snow chains on a compact spare tire.
- Do not use your compact spare tire on another vehicle unless it is the same make and model.
- After the flat tire is replaced with the spare tire, the low tire pressure/TPMS indicator stays on. After several miles (kilometers) driving with the spare, this indicator begins to flash, then stays on again. You will also see a "CHECK TPMS SYSTEM" message on the multi-information display (see page 493).

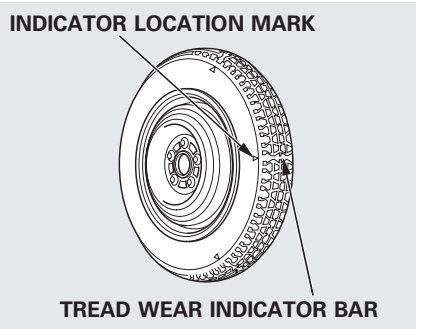


Replace the tire when you can see the tread wear indicator bars. The replacement should be the same size and design tire, mounted on the same wheel. The spare tire is not designed to be mounted on a regular wheel, and the spare wheel is not designed for mounting a regular tire.

If you have a flat tire while driving, stop in a safe place to change it. Drive slowly along the shoulder until you get to an exit or an area to stop that is far away from the traffic lanes.

**⚠WARNING**

The vehicle can easily roll off the jack, seriously injuring anyone underneath.

Follow the directions for changing a tire exactly, and never get under the vehicle when it is supported only by the jack.

1. Park the vehicle on firm, level, and non-slippery ground. Put the transmission in Park. Apply the parking brake.

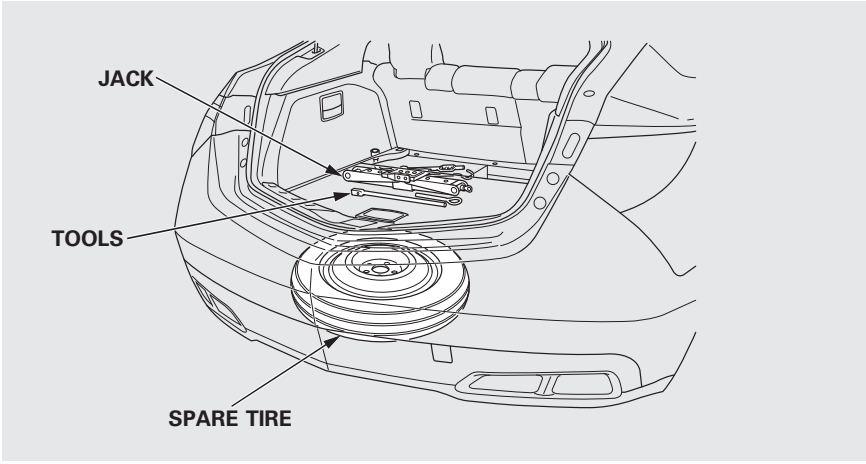


2. Turn on the hazard warning lights, and turn the ignition switch to the LOCK (0) position. Have all passengers get out of the vehicle while you change the tire.

Models equipped with the keyless access system have an engine start/stop button instead of an ignition switch. VEHICLE OFF (LOCK) mode is the equivalent of LOCK (0). See page 196 for ignition switch and power mode comparison.

*CONTINUED*

3. Open the tailgate.

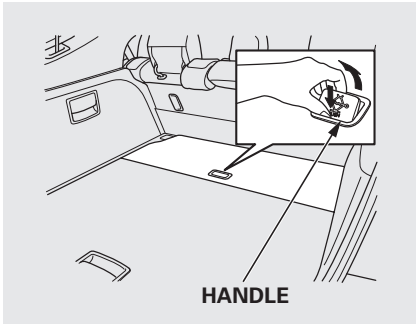


4. Push the rear edge of the handle to raise the handle and pull up the handle to raise the front cargo area floor.

   Take the tools and jack out of the tool case.

   The subwoofer, a large black enclosure, is located on the right side under the lid. Do not store anything in this area. Doing so may compromise vehicle audio performance.

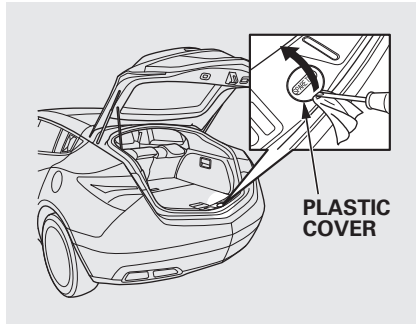


5. The spare tire is stored underneath the rear cargo area. Remove the plastic cover on the cargo area lining to access the shaft for the spare tire hoist.

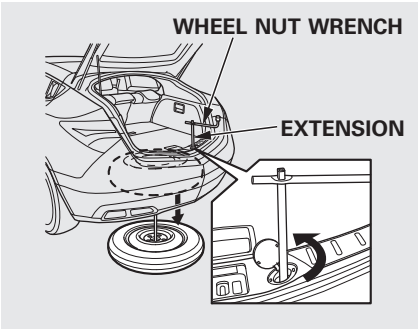


**NOTICE**

*The wheel nut wrench supplied with your vehicle is specially adapted to fit the hoist shaft. Do not use any other tool.*

6. Put the extension with the wheel nut wrench on the hoist shaft. Turn the wrench counterclockwise to lower the spare tire to the ground.

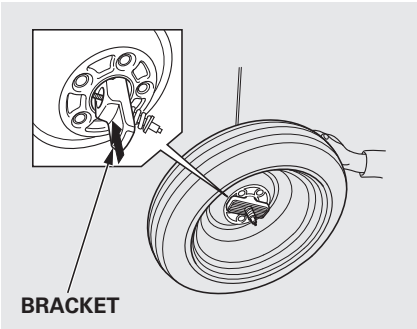


7. Keep turning the wheel nut wrench to create slack in the cable.
8. Remove the bracket from the spare tire.

9. Loosen each wheel nut 1/2 turn with the wheel nut wrench.

*CONTINUED*

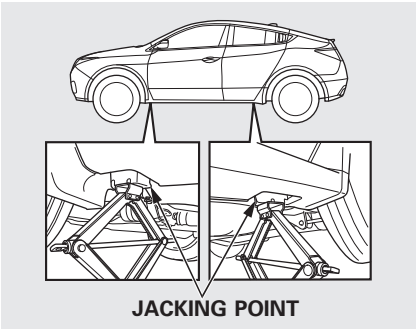


10. Place the jack under the jacking point nearest the tire you need to change. Turn the end bracket clockwise until the top of the jack contacts the jacking point. Make sure the jacking point tab is resting in the jack notch.

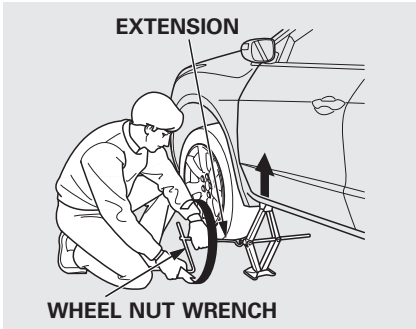


11. Use the extension and the wheel nut wrench as shown to raise the vehicle until the flat tire is off the ground.

12. Remove the wheel nuts, then remove the flat tire.

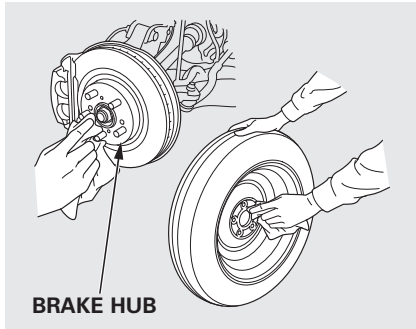


13. Before mounting the spare tire, wipe any dirt off the mounting surface of the wheel and hub with a clean cloth. Wipe the hub carefully; it may be hot from driving.

14. Put on the spare tire. Put the wheel nuts back on finger-tight, then tighten them in a crisscross pattern with the wheel nut wrench until the wheel is firmly against the hub. Do not try to tighten the wheel nuts fully.
15. Lower the vehicle to the ground, and remove the jack.

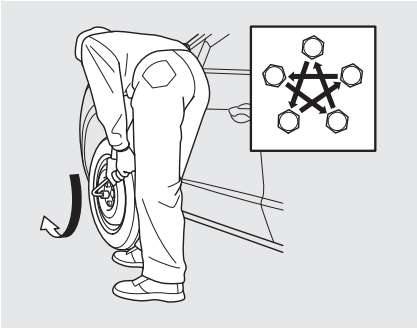

16. Tighten the wheel nuts securely in the same crisscross pattern. Have the wheel nut torque checked at the nearest automotive service facility.
    Tighten the wheel nuts to:
    94 lbf·ft (127 N·m, 13 kgf·m)
17. Remove the center cap from the flat tire.
18. Place the flat tire face up under the hoist.
19. Insert the hoist bracket into the center hole of the flat tire.

*CONTINUED*

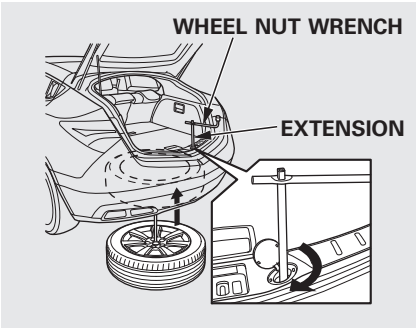


20. Slowly turn the extension with the wheel nut wrench clockwise to take up the slack of the hoist cable. Make sure the bracket is seated in the center hole of the flat tire.
21. Turn the extension with the wheel nut wrench clockwise until the flat tire rests against the underbody of the vehicle and you hear the hoist click.

**NOTICE**

*Always raise the spare tire hoist, even if you are not stowing a tire. If the hoist is left down, it will be damaged during driving and need to be replaced.*

22. Store the jack and the tools in the tool case.
23. Refer to **Changing a Tire with TPMS** (see page 494).

**⚠WARNING**

Loose items can fly around the interior in a crash and could seriously injure the occupants.

Store the wheel, jack, and tools securely before driving.

Diagnosing why the engine won't start falls into two areas, depending on what you hear when you turn the ignition switch to the START (III) position or on models with keyless access system, press the engine start/stop button to set START mode (see page 194):

- You hear nothing, or almost nothing. The engine's starter motor does not operate at all, or operates very slowly.
- You can hear the starter motor operating normally, or the starter motor sounds like it is spinning faster than normal, but the engine does not start up and run.

**Nothing Happens or the Starter Motor Operates Very Slowly**

When you turn the ignition switch to the START (III) position or on models with keyless access system, press the engine start/stop button to set START mode (see page 194), you do not hear the normal noise of the engine trying to start. You may hear a clicking sound, a series of clicks, or nothing at all.

Check these things:

- Check the transmission interlock. The transmission must be in Park or neutral or the starter will not operate.
- Turn the ignition switch to the ON (II) position or on models with keyless access system, press the engine start/stop button to set ON mode (see page 194). Turn on the headlights, and check their brightness. If the headlights are very dim or do not come on at all, the battery is discharged. See **Jump Starting** on page 587.
- Turn the ignition switch to the START (III) position or on models with keyless access system, press the engine start/stop button to set START mode (see page 194). If the headlights do not dim, check the condition of the fuses. If the fuses are OK, there is probably something wrong with the electrical circuit for the ignition switch or starter motor. You will need a qualified technician to determine the problem. See **Emergency Towing** on page 602.

*CONTINUED*

If the headlights dim noticeably or go out when you try to start the engine, either the battery is discharged or the connections are corroded. Check the condition of the battery and terminal connections (see page 573). You can then try jump starting the vehicle from a booster battery (see page 587).

**The Starter Operates Normally**
In this case, the starter motor's speed sounds normal, or even faster than normal, when you turn the ignition switch to the START (III) position or on models with keyless access system, press the engine start/stop button to set START mode (see page 194), but the engine does not run.

- Are you using a properly coded key? An improperly coded key will cause the immobilizer system indicator in the instrument panel to blink rapidly (see page 70).

*On models with keyless access system*

- Do you have your keyless access system remote with you? The vehicle will not start without the remote within operating range. The vehicle will not start without the remote within operating range and with the keyless access main switch in the glove box turned on.
- Are you using the proper starting procedure? Refer to **Starting the Engine** on page 475.
- Do you have fuel? Check the fuel gauge; the warning indicator may not be working.
- There may be an electrical problem, such as no power to the fuel pump. Check all the fuses (see page 596).

If you find nothing wrong, you will need a qualified technician to find the problem. See **Emergency Towing** on page 602.

**NOTE:** If you are unable to stop the engine normally while in the Park position, see **Emergency Engine Stop** on page 200.

Although this seems like a simple procedure, you should take several precautions.

**⚠WARNING**

A battery can explode if you do not follow the correct procedure, seriously injuring anyone nearby.

Keep all sparks, open flames, and smoking materials away from the battery.

You cannot start your vehicle by pushing or pulling it.

***To Jump Start Your Vehicle:***

1. Open the hood, and check the physical condition of the battery. In very cold weather, check the condition of the electrolyte. If it seems slushy or frozen, do not try jump starting until it thaws.

**NOTICE**

*If a battery sits in extreme cold, the electrolyte inside can freeze. Attempting to jump start with a frozen battery can cause it to rupture.*

2. Turn off all the electrical accessories: climate control, audio system, lights, etc. Put the transmission in Park, and set the parking brake.

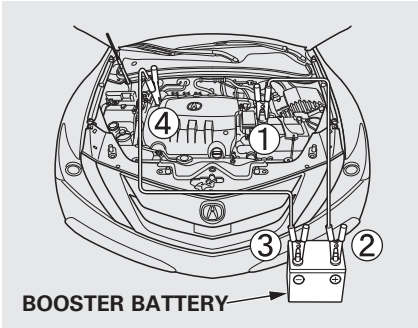


The numbers in the illustration show you the order to connect the jumper cables.

3. Connect one jumper cable to the positive (+) terminal on your vehicle's battery. Connect the other end to the positive (+) terminal on the booster battery.

*CONTINUED*

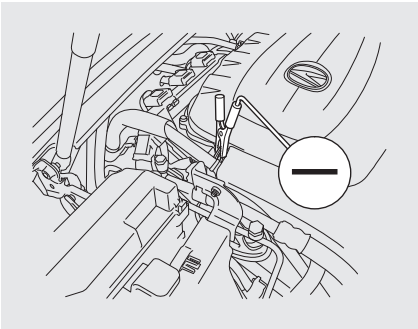

4. Connect the second jumper cable to the negative (−) terminal on the booster battery. Connect the other end to the engine hanger as shown. Do not connect this jumper cable to any other part of the engine.
5. If the booster battery is in another vehicle, have an assistant start that vehicle and run it at a fast idle.
6. Start your vehicle. If the starter motor still operates slowly, check that the jumper cables have good metal-to-metal contact.
7. Once the vehicle is running, disconnect the negative cable from your vehicle, then from the booster battery. Disconnect the positive cable from your vehicle, and then from the booster battery.

Keep the ends of the jumper cables away from each other and any metal on the vehicle until everything is disconnected. Otherwise, you may cause an electrical short.

The pointer of your vehicle's temperature gauge should stay in the midrange under most conditions. If it climbs to the red mark, you should determine the reason (hot day, driving up a steep hill, etc.).

If the vehicle overheats, you should take immediate action. The only indication may be the temperature gauge climbing to or above the red mark. Or you may see steam or spray coming from under the hood.

**NOTICE**

*Driving with the temperature gauge pointer at the red mark can cause serious damage to the engine.*

**⚠WARNING**

Steam and spray from an overheated engine can seriously scald you.

Do not open the hood if steam is coming out.

1. Safely pull to the side of the road. Put the transmission in Park, and set the parking brake. Turn off all accessories, and turn on the hazard warning lights.
2. If you see steam and/or spray coming from under the hood, turn off the engine. Wait until you see no more signs of steam or spray, then open the hood.
3. If you do not see steam or spray, leave the engine running and watch the temperature gauge. If the high heat is due to overloading, the engine should start to cool down almost immediately. If it does, wait until the temperature gauge comes down to the midpoint, then continue driving.

*CONTINUED*

4. If the temperature gauge stays at the red mark, turn off the engine.
5. Look for any obvious coolant leaks, such as a split radiator hose. Everything is still extremely hot, so use caution. If you find a leak, it must be repaired before you continue driving (see **Emergency Towing** on page 602).
6. If you do not find an obvious leak, check the coolant level in the radiator reserve tank. Add coolant if the level is below the MIN mark.
7. If there was no coolant in the reserve tank, you may need to add coolant to the radiator. Let the engine cool down until the pointer reaches the middle of the temperature gauge, or lower, before checking the radiator.

**⚠WARNING**

Removing the radiator cap while the engine is hot can cause the coolant to spray out, seriously scalding you.

Always let the engine and radiator cool down before removing the radiator cap.

8. Using gloves or a large heavy cloth, turn the radiator cap counterclockwise, without pushing down, to the first stop. After the pressure releases, push down on the cap, and turn it until it comes off.
9. Start the engine and set the climate control to AUTO at “Hi.” Add coolant to the radiator up to the base of the filler neck. If you do not have the proper coolant mixture available, you can add plain water. Remember to have the cooling system drained and refilled with the proper mixture as soon as you can.
10. Put the radiator cap back on tightly. Run the engine, and check the temperature gauge. If it goes back to the red mark, the engine needs repair (see **Emergency Towing** on page 602).
11. If the temperature stays normal, check the coolant level in the radiator reserve tank. If it has gone down, add coolant to the MAX mark. Put the cap back on tightly.

This indicator should never come on when the engine is running. If it starts flashing or stays on, the oil pressure has dropped very low or lost pressure. Serious engine damage is possible, and you should take immediate action.

You will also see a “CHECK ENGINE OIL LEVEL” message on the multi-information display when this indicator comes on.

**NOTICE**

*Running the engine with low oil pressure can cause serious mechanical damage almost immediately. Turn off the engine as soon as you can safely get the vehicle stopped.*

1. Safely pull off the road, and shut off the engine. Turn on the hazard warning lights.
2. Let the vehicle sit for a minute. Open the hood, and check the oil level (see page 458). An engine very low on oil can lose pressure during cornering and other driving maneuvers.
3. If necessary, add oil to bring the level back to the full mark on the dipstick (see page 545).
4. Start the engine, and watch the oil pressure indicator. If it does not go out within 10 seconds, turn off the engine. There is a mechanical problem that needs to be repaired before you can continue driving (see **Emergency Towing** on page 602).

# Charging System Indicator

If the charging system indicator comes on brightly when the engine is running, the battery is not being charged.

You will also see a “CHECK CHARGING SYSTEM” message on the multi-information display (see page 90).

Immediately turn off all electrical accessories. Try not to use other electrically operated controls such as the power windows. Keep the engine running; starting the engine will discharge the battery rapidly.

Go to a service station or garage where you can get technical assistance.

If you see a “REPLACE BATTERY” message on the multi-information display, along with this indicator on, you may need to replace the battery. Have your vehicle's battery checked and replaced by your dealer.

If this indicator comes on while driving, it means one of the engine's emissions control systems may have a problem. Even though you may feel no difference in your vehicle's performance, it can reduce your fuel economy and cause increased emissions. Continued operation may cause serious damage.

If you have recently refueled your vehicle, the indicator coming on could be due to a loose or missing fuel fill cap. You will also see a "TIGHTEN FUEL CAP" message on the multi-information display. Tighten the cap until it clicks at least once. Tightening the cap will not turn the indicator off immediately; it can take several days of normal driving.

If the indicator comes on repeatedly, even though it may turn off as you continue driving, have your vehicle checked by the dealer as soon as possible.

**NOTICE**

*If you keep driving with the malfunction indicator lamp on, you can damage your vehicle's emissions controls and engine. Those repairs may not be covered by your vehicle's warranties.*

You will also see a "CHECK EMISSION SYSTEM" message on the multi-information display (see page 90).

**Readiness Code**

Your vehicle has certain "readiness codes" that are part of the on-board diagnostics for the emissions systems. In some states, part of the emissions testing is to make sure these codes are set. If they are not set, the test cannot be completed.

If the battery in your vehicle has been disconnected or gone dead, these codes may be erased. It takes several days of driving under various conditions to set the codes again.

To check if they are set, turn the ignition switch to the ON (II) position (set ON mode on models with keyless access system), without starting the engine. The malfunction indicator lamp will come on for 20 seconds. If it then goes off, the readiness codes are set. If it blinks five times, the readiness codes are not set. If possible, do not take your vehicle for an emissions test until the readiness codes are set. Refer to **Emissions Testing** for more information (see page 619).

# Brake System Indicator

U.S. Canada

BRAKE

The brake system indicator normally comes on when you turn the ignition switch to the ON (II) position, and as a reminder to check the parking brake. It will stay on if you do not fully release the parking brake.

Models equipped with the keyless access system have an engine start/stop button instead of an ignition switch. ON mode is the equivalent of ON (II). See page 196 for ignition switch and power mode comparison.

If the brake system indicator comes on while driving, the brake fluid level is probably low. Press lightly on the brake pedal to see if it feels normal. If it does, check the brake fluid level the next time you stop at a service station (see page 553).

You will also see a “LOW BRAKE FLUID” message on the multi-information display (see page 90).

If the fluid level is low, take your vehicle to a dealer, and have the brake system inspected for leaks or worn brake pads.

However, if the brake pedal does not feel normal, you should take immediate action. A problem in one part of the system's dual circuit design will still give you braking at two wheels. You will feel the brake pedal go down much farther before the vehicle begins to slow down, and you will have to press harder on the pedal.

You will also see a “CHECK BRAKE SYSTEM” message on the multi-information display (see page 90).

Slow down by shifting to a lower gear, and pull to the side of the road when it is safe. Because of the long distance needed to stop, it is hazardous to drive the vehicle. You should have it towed, and repaired as soon as possible (see **Emergency Towing** on page 602).

If you must drive the vehicle a short distance in this condition, drive slowly and carefully.

If the ABS indicator and the VSA system indicator come on with the brake system indicator, have your vehicle inspected by your dealer immediately.

**INTERIOR(DRIVER'S SIDE)**

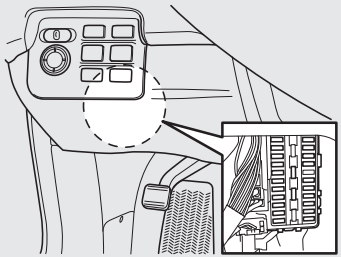

The vehicle's fuses are located in four fuse boxes.

The driver's side interior fuse box is underneath the dashboard on the driver's side.

**INTERIOR(PASSENGER'S SIDE)**

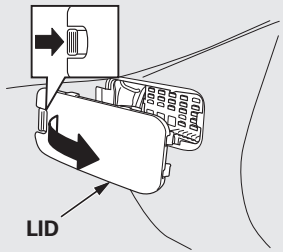


The passenger's side interior fuse box is on the lower passenger's side panel. To remove the fuse box lid, put your finger in the notch on the lid, and pull it upward slightly, then pull it toward you and take it out of its hinges.

**UNDER-HOOD (PRIMARY)**

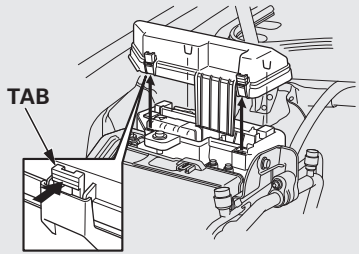


**UNDER-HOOD (SECONDARY)**

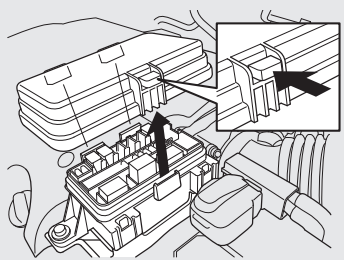

*CONTINUED*

The primary under-hood fuse box is on the passenger's side. The secondary fuse box is located next to the battery.

To open it, push the tabs as shown.

**Checking and Replacing Fuses**

If something electrical in your vehicle stops working, the first thing you should check for is a blown fuse. Determine from the chart on pages 599, 600, and 601, or the diagram on the fuse box lid, which fuse or fuses control that device. Check those fuses first, but check all the fuses before deciding that a blown fuse is the cause. Replace any blown fuses, and check if the device works.

1. Turn the ignition switch to the LOCK (0) position. Make sure the headlights and all other accessories are off.

   Models equipped with the keyless access system have an engine start/stop button instead of an ignition switch. VEHICLE OFF (LOCK) mode is the equivalent of LOCK (0). See page 196 for ignition switch and power mode comparison.

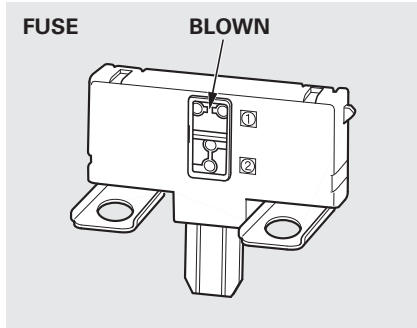


2. Remove the cover from the fuse box.
3. Check each of the large fuses in the under-hood fuse boxes by looking through the top at the wire inside. Removing these fuses requires a Phillips-head screwdriver.

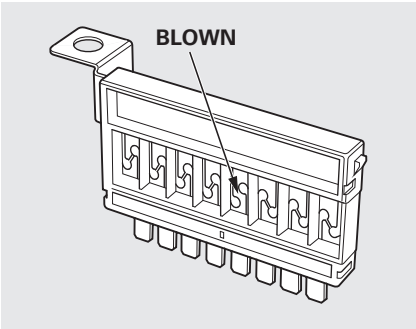


Also check the combined fuse box in the under-hood fuse box.

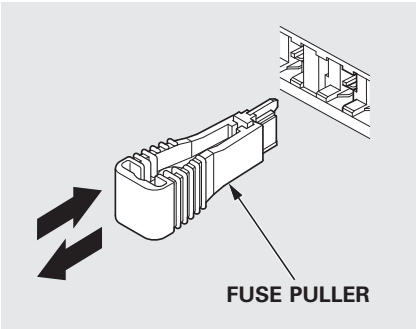


4. Check the smaller fuses in the under-hood fuse boxes and rear fuse box, and all the fuses in the interior and rear fuse boxes by pulling out each one with the fuse puller provided in the primary under-hood fuse box.

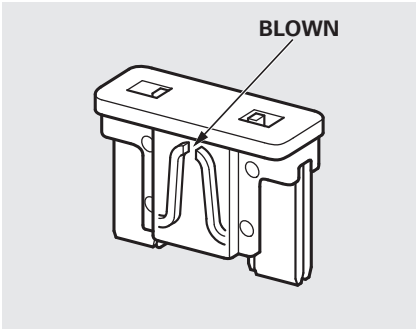


5. Look for a burned wire inside the fuse. If it is burned out, replace it with one of the spare fuses of the same rating or lower.

*CONTINUED*

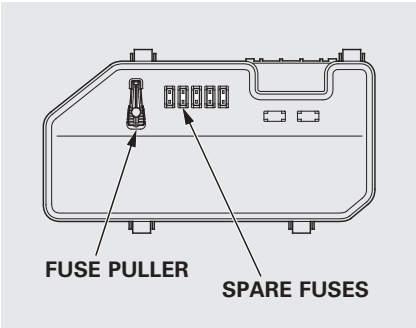


Your vehicle has spare fuses on the back of the under-hood fuse box cover.

If you cannot drive the vehicle without fixing the problem, and you do not have a spare fuse, take a fuse of the same rating or a lower rating from one of the other circuits. Make sure you can do without that circuit temporarily (such as the accessory power socket or radio).

If you replace the blown fuse with a spare fuse that has a lower rating, it might blow out again. This does not indicate anything is wrong. Replace the fuse with one of the correct rating as soon as you can.

**NOTICE**

*Replacing a fuse with one that has a higher rating greatly increases the chances of damaging the electrical system. If you do not have a replacement fuse with the proper rating for the circuit, install one with a lower rating.*

6. If the replacement fuse of the same rating blows in a short time, there is probably a serious electrical problem with your vehicle. Leave the blown fuse in that circuit, and have your vehicle checked by a qualified technician.

## PRIMARY UNDER-HOOD FUSE BOX

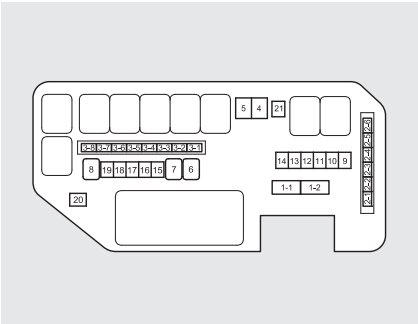


| No. | Amps. | Circuits Protected |
|---|---|---|
| 1 | 120 A | BATTERY |
| | 40 A | Passenger's Side Fuse Box STD |
| 2 | – | Not Used |
| | – | Not Used |
| | 30 A | Headlight Washer |
| | 40 A | Passenger's Side Fuse Box Option |
| | 30 A | Right e-pretensioner |
| | 30 A | Left e-pretensioner |
| 3 | 50 A | IG Main |
| | 40 A | Sub Fan Motor |
| | – | Not Used |
| | 60 A | Driver's Fuse Box STD |
| | 40 A | Main Fan Motor |
| | 30 A | Driver's Light Main |
| | 30 A | Wiper Motor |
| | – | Not Used |
| 4 | 40 A | Heater Motor |
| 5 | 30 A | Passenger's Light Main |
| 6 | – | Not Used |
| 7 | – | Not Used |
| 8 | 40 A | Rear Defroster |
| 9 | 7.5 A | Trailer Turn/Stop Lights |
| 10 | 15 A | Stop & Horn |
| 11 | 7.5 A | Trailer Small Lights |
| 12 | 30 A | ADS |
| 13 | 15 A | IG Coil |
| 14 | 15 A | FI Sub |
| 15 | 10 A | Back Up |
| 16 | 7.5 A | Interior Light |
| 17 | 15 A | FI Main |
| 18 | 15 A | DBW |
| 19 | 15 A | Woofer |
| 20 | 7.5 A | MG Clutch |
| 21 | 7.5 A | Radiator Fan Timer |

## SECONDARY UNDER-HOOD FUSE BOX

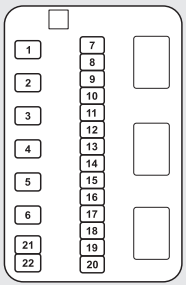


| No. | Amps. | Circuits Protected |
|---|---|---|
| 1 | 40 A | VSA Motor |
| 2 | 20 A | VSA FSR |
| 3 | – | Not Used |
| 4 | – | Not Used |
| 5 | 30 A | SH-AWD |
| 6 | 40 A | Power Tailgate Motor |
| 7 | 20 A | Tilt Steering Wheel |
| 8 | 20 A | Telescopic Steering Wheel |
| 9 | 15 A | Hazard |
| 10 | 7.5 A | Headlight Hi/Lo Solenoid |
| 11 | 7.5 A | Power Management System |
| 12 | 7.5 A | Smart Accessory |

*CONTINUED*

| | | |
|---|---|---|
| 13 | 20 A | Rear Seat Heaters |
| 14 | 20 A | Sunshade |
| 15 | 20 A | Power Tailgate Closer |
| 16 | – | Not Used |
| 17 | – | Not Used |
| 18 | – | Not Used |
| 19 | – | Not Used |
| 20 | – | Not Used |
| 21 | – | Not Used |
| 22 | – | Not Used |

## INTERIOR FUSE BOX (Driver's Side)

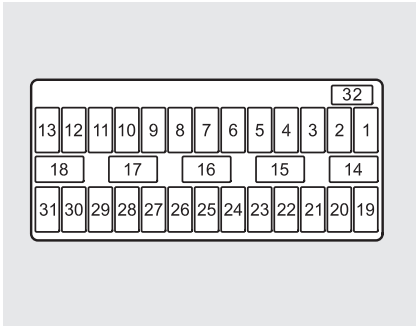


| No. | Amps. | Circuits Protected |
|---|---|---|
| 1 | 7.5 A | Front Seat Heaters and Seat Ventilation/Blind Spot Information*1 |
| 2 | 7.5 A | SH-AWD/Headlight Adjuster |
| 3 | 20 A | Washer |
| 4 | 7.5 A | Wiper |
| 5 | 7.5 A | OPDS |
| 6 | 7.5 A | VSA |
| 7 | – | Not Used |
| 8 | 7.5 A | STRLD |
| 9 | 20 A | Fuel Pump |
| 10 | 10 A | VB Solenoid |
| 11 | 10 A | SRS |
| 12 | 7.5 A | Meter |
| 13 | 15 A | ACG |
| 14 | – | Not Used |
| 15 | 7.5 A | Daytime Running Lights |
| 16 | 7.5 A | Climate Control System |
| 17 | 7.5 A | Accessory Key Lock*2 |
| 18 | 7.5 A | Accessory |
| 19 | 20 A | Left Power Seat Slide |
| 20 | 20 A | Panoramic Glass Roof |
| 21 | 20 A | Left Power Seat Reclining |
| 22 | 20 A | Rear Left Power Window |
| 23 | 15 A | Accessory Power Socket (Console Box) |
| 24 | 20 A | Left Front Power Window |
| 25 | 15 A | Left Door Lock |
| 26 | 10 A | Left Front Fog Light |
| 27 | 10 A | Left Small Light (Exterior) |
| 28 | 10 A | Left Daytime Running Light |
| 29 | 7.5 A | TPMS |
| 30 | 15 A | Left Headlight |
| 31 | – | Not Used |
| 32 | 7.5 A | STS*2 |

*1: On U.S. ADVANCE and Canadian ELITE models
*2: On BASE model

## INTERIOR FUSE BOX (Passenger's Side)

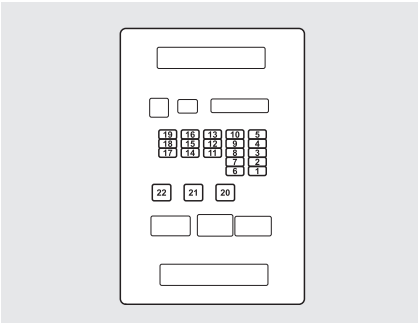


| No. | Amps. | Circuits Protected |
|---|---|---|
| 1 | 10 A | Right Daytime Running Light |
| 2 | 10 A | Right Small Light (Exterior) |
| 3 | 10 A | Right Front Fog Light |
| 4 | 15 A | Right Headlight |
| 5 | – | Not Used |
| 6 | 7.5 A | Right Small Light (Interior) |
| 7 | – | Not Used |
| 8 | 20 A | Right Power Seat Reclining |
| 9 | 20 A | Right Power Seat Slide |
| 10 | 10 A | Right Door Lock |
| 11 | 20 A | Right Rear Power Window |
| 12 | 10 A | SMART |
| 13 | 20 A | Right Front Power Window |
| 14 | – | Not Used |
| 15 | 20 A | Audio Amp |
| 16 | 15 A | Accessory Power Socket (Center Console) |
| 17 | – | Not Used |
| 18 | 7.5 A | Power Lumbar |
| 19 | 20 A | Seat Heaters |
| 20 | – | Not Used |
| 21 | – | Not Used |
| 22 | – | Not Used |

## Opening the Fuel Fill Door Manually

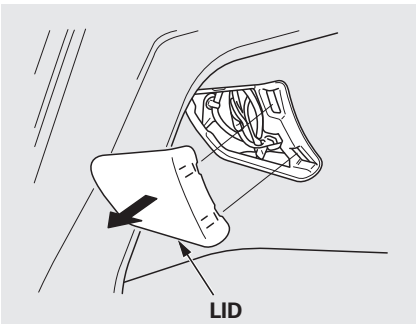


If there is a problem with the power door lock system and you cannot unlock the driver's door, use the release lever behind the left side cover in the cargo area.

To open the fuel fill door, pull the release lever rearward.

## Emergency Towing

If your vehicle needs to be towed, call a professional towing service or organization. Never tow your vehicle with just a rope or chain. It is very dangerous.

**The only way you can safely tow your vehicle is with flat-bed equipment.** The operator will load your vehicle on the back of a truck. Any other method of towing will damage the drive system. When you contact the towing agency, inform them a flat-bed is required.

**NOTICE**

*Towing with only two tires on the ground will damage parts of the all-wheel-drive system. Your vehicle should be transported on a flat-bed truck or trailer.*

If your vehicle gets stuck in sand, mud, or snow, call a towing service to pull it out.

For very short distances, such as freeing the vehicle, you can use the detachable towing hook that mounts on the anchors in the front and rear bumpers.

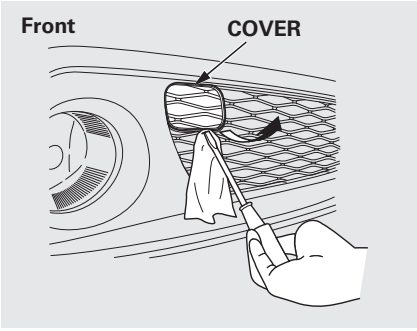


1. Remove the cover, put cloth on the edge of the cover to prevent scratches and carefully pry with a small flat-tip screwdriver or a metal fingernail file.

   (Front only)
   Remove the rubber cap.

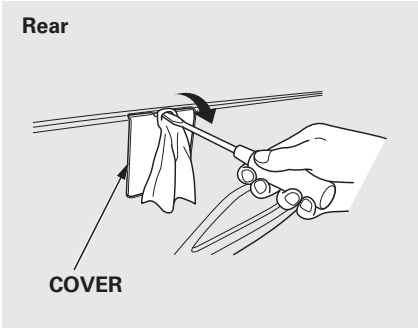


The cover is attached to the bumper with a tether.

*CONTINUED*

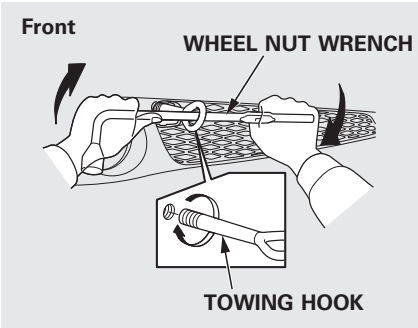


2. Remove the towing hook and wheel nut wrench placed behind a cover under the cargo area.
3. Screw the towing hook into the hole, and tighten it with the wheel nut wrench.

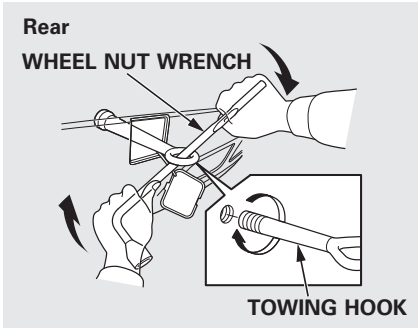


**NOTICE**

*To avoid damage to your vehicle, use the towing hook for straight, flat ground towing only. Do not tow at an angle. The tow hook should not be used to tow the vehicle onto a flat bed. Do not use it as a tie down.*

The diagrams in this section give you the dimensions and capacities of your vehicle and the locations of the identification numbers. It also includes information you should know about your vehicle's tires and emissions control systems.

Identification Numbers ..... 606
Specifications ..... 608
DOT Tire Quality Grading (U.S. Vehicles) ..... 610
Tire Labeling ..... 612
Tire Pressure Monitoring System (TPMS) – Required Federal Explanation ..... 614
Emissions Controls ..... 616
Three Way Catalytic Converter ..... 618
Emissions Testing ..... 619

# Identification Numbers

Your vehicle has several identifying numbers located in various places.

The vehicle identification number (VIN) is the 17-digit number your dealer uses to register your vehicle for warranty purposes. It is also necessary for licensing and insuring your vehicle. The easiest place to find the VIN is on a plate fastened to the top of the dashboard. You can see it by looking through the windshield on the driver's side. It is also on the certification label attached to the driver's doorjamb, and is stamped on the engine compartment bulkhead. The VIN is also provided in bar code on the certification label.

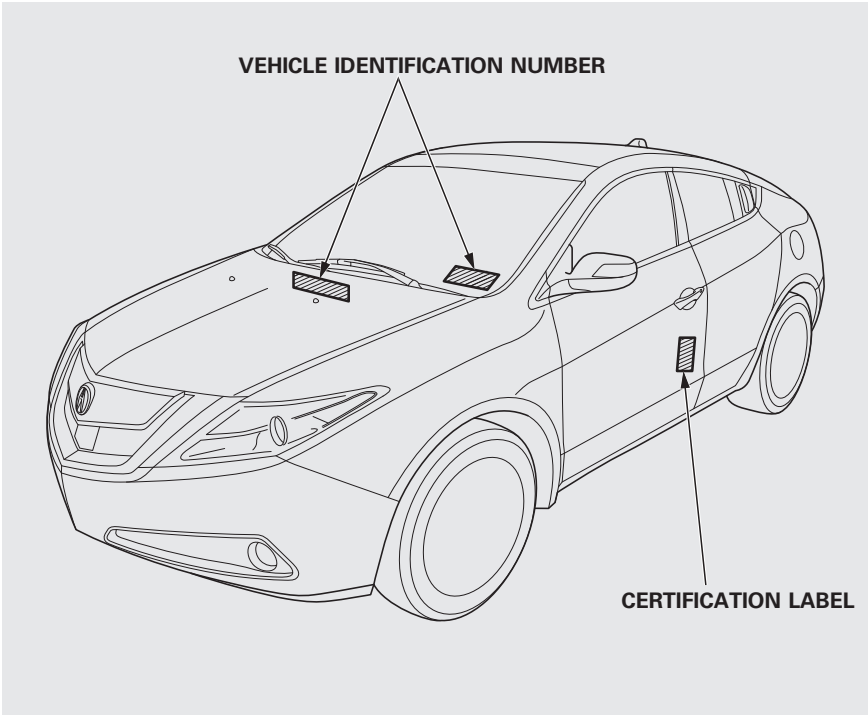

The engine number is stamped into the engine block. It is on the front.

The transmission number is on a label on side of the transmission.

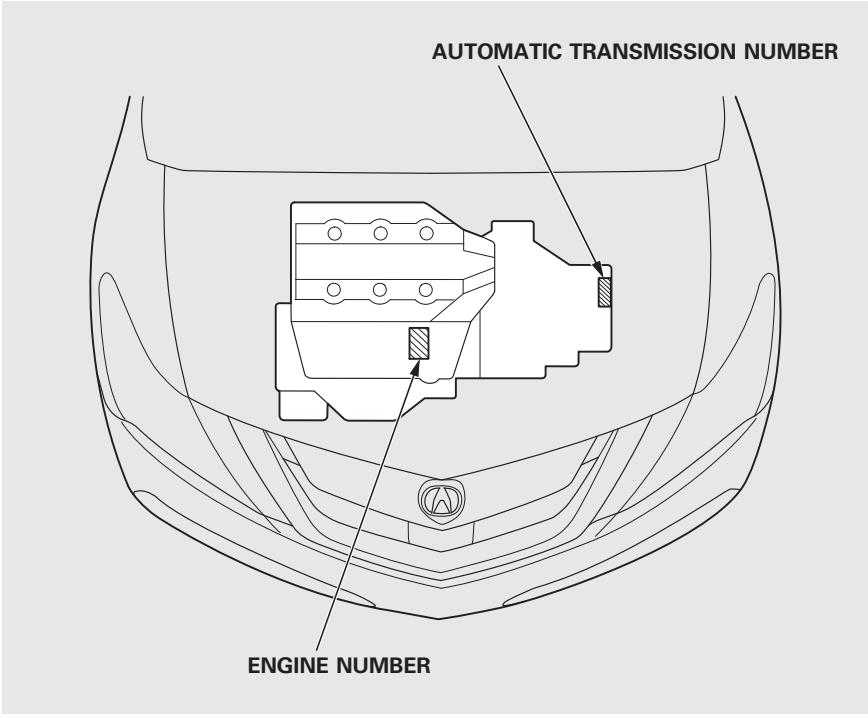

**Dimensions**

| | | |
|---|---|---|
| Length | | 193.1 in (4,904 mm) |
| Width | | 78.5 in (1,993 mm) |
| Height | | 62.8 in (1,596 mm) |
| Wheelbase | | 108.3 in (2,750 mm) |
| Track | Front | 67.7 in (1,720 mm) |
| | Rear | 67.7 in (1,719 mm) |

**Weights**

| | |
|---|---|
| Gross vehicle weight rating | See the tire information label attached to the driver's doorjamb. |
| Gross combined weight*1 rating (GCWR) | 6,593 lbs (2,990 kg) |

*1: The GCWR must be reduced 2 percent for every 1,000 feet (305 meters) of elevation.

**Air Conditioning**

| | |
|---|---|
| Refrigerant type | HFC-134a (R-134a) |
| Charge quantity | 16.9—18.7 oz (480—530 g) |
| Lubricant type | ND-OIL 8 |

**Seating Capacities**

| | |
|---|---|
| Total | 5 |
| Front | 2 |
| Rear | 3 |

**Capacities**

| | | |
|---|---|---|
| Fuel tank | | Approx. 21.00 US gal (79.5 L) |
| Engine coolant | Change*1 | 1.77 US gal (6.7 L) |
| | Total | 2.27 US gal (8.6 L) |
| Engine oil | Change*2 | |
| | Including filter | 4.5 US qt (4.3 L) |
| | Without filter | 4.2 US qt (4.0 L) |
| | Total | 5.3 US qt (5.0 L) |
| Automatic transmission fluid | Change | 3.3 US qt (3.1 L) |
| | Total | 8.5 US qt (8.0 L) |
| Rear differential fluid | Change | 2.67 US qt (2.53 L) |
| | Total | 2.93 US qt (2.77 L) |
| Transfer assembly fluid | Change | 0.45 US qt (0.43 L) |
| | Total | 0.48 US qt (0.45 L) |
| Windshield washer reservoir | | 5.2 US qt (4.9 L) |

*1: Including the coolant in the reserve tank and that remaining in the engine
Reserve tank capacity:
0.18 US gal (0.675 L)

*2: Excluding the oil remaining in the engine

**Lights**

| | |
|---|---|
| Headlights (high/low beam)*1 | 35 W (D2S) |
| Daytime running lights | 60 W (HB3) |
| Front side marker lights | 5 W |
| Front turn signal/parking lights | 28/8 W (Amber) |
| Fog lights | 55 W (H11) |
| Side turn signal lights | LED |
| Rear turn signal lights | 21 W |
| Rear side marker lights | 3 CP |
| Stop/taillights | 21/5 W |
| Back-up lights | 21 W |
| License plate lights | 5 W |
| High-mount brake lights | LED |
| Front and rear individual map lights | LED |
| Cargo area light | 8 W |
| Door courtesy lights | 3.4 W |
| Vanity mirror lights | 1.4 W |
| Console compartment light | 1.4 W |
| Glove box light | 1.4 W |
| Foot light | LED |
| Door inner handle light*2 | LED |

*1: The low beam headlights are high voltage discharged type. Replacement of a low beam headlight bulb should be performed by your dealer.

*2: On models with adaptive cruise control (ACC)

**Battery**

| | |
|---|---|
| Capacity | 12 V — 60AH/5 HR<br>12 V — 72AH/20 HR |

**Fuses**

| | | |
|---|---|---|
| Interior | Driver's side | See page 600 or the fuse label attached under the steering column. |
| | Passenger's side | See page 601 or the fuse label attached on the inside of fuse box lid. |
| Under-hood | | See page 599 or the fuse box cover. |

**Engine**

| | |
|---|---|
| Type | Water-cooled, 4-stroke SOHC VTEC V6 gasoline engine |
| Bore x Stroke | 3.54 x 3.78 in (90.0 x 96.0 mm) |
| Displacement | 223.5 cu-in (3,664 $cm^3$) |
| Compression ratio | 11.2 : 1 |
| Spark plugs | DENSO: SXU22HCR11S<br>NGK: ILZKR7B-11S |

**Alignment**

| | | |
|---|---|---|
| Toe-in | Front | 0.00 in (0.0 mm) |
| | Rear | 0.07 in (2.0 mm) |
| Camber | Front | −0.5° |
| | Rear | −0.5° |
| Caster | Front | 4.64° |

**Tires**

| | | |
|---|---|---|
| Size | Front/Rear | P255/50R19 103H |
| | Spare | T165/80D17 104M |
| Pressure | Front/Rear | 32 psi (220 kPa, 2.2 $kgf/cm^2$) |
| | Spare | 60 psi (420 kPa, 4.2 $kgf/cm^2$) |

# DOT Tire Quality Grading (U.S. Vehicles)

The tires on your vehicle meet all U. S. Federal Safety Requirements. All tires are also graded for treadwear, traction, and temperature performance according to Department of Transportation (DOT) standards. The following explains these gradings.

**Uniform Tire Quality Grading**
Quality grades can be found where applicable on the tire sidewall between tread shoulder and maximum section width. For example:

**Treadwear 200**
**Traction AA**
**Temperature A**

All passenger car tires must conform to Federal Safety Requirements in addition to these grades.

**Treadwear**
The treadwear grade is a comparative rating based on the wear rate of the tire when tested under controlled conditions on a specified government test course. For example, a tire graded 150 would wear one and one-half (1 1/2) times as well on the government course as a tire graded 100. The relative performance of tires depends upon the actual conditions of their use, however, and may depart significantly from the norm due to variations in driving habits, service practices and differences in road characteristics and climate.

**Traction**
The traction grades, from highest to lowest, are AA, A, B, and C. Those grades represent the tire's ability to stop on wet pavement as measured under controlled conditions on specified government test surfaces of asphalt and concrete. A tire marked C may have poor traction performance.

Warning: The traction grade assigned to this tire is based on straight-ahead braking traction tests, and does not include acceleration, cornering, hydroplaning, or peak traction characteristics.

**Temperature**
The temperature grades are A (the highest), B, and C, representing the tire's resistance to the generation of heat and its ability to dissipate heat when tested under controlled conditions on a specified indoor laboratory test wheel. Sustained high temperature can cause the material of the tire to degenerate and reduce tire life, and excessive temperature can lead to sudden tire failure. The grade C corresponds to a level of performance which all passenger car tires must meet under the Federal Motor Vehicle Safety Standard No. 109. Grades B and A represent higher levels of performance on the laboratory test wheel than the minimum required by law.

Warning: The temperature grade for this tire is established for a tire that is properly inflated and not overloaded. Excessive speed, underinflation, or excessive loading, either separately or in combination, can cause heat buildup and possible tire failure.

# Tire Labeling

The tires that came on your vehicle have a number of markings. Those you should be aware of are described below.

**TIRE LABELING EXAMPLE**

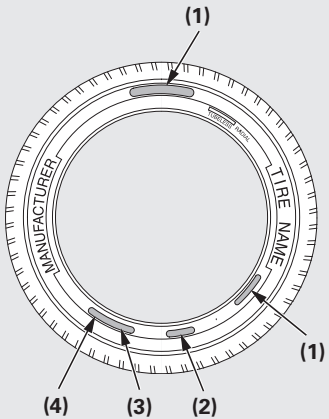


**(1) Tire Size**
**(2) Tire Identification Number (TIN)**
**(3) Maximum Tire Pressure**
**(4) Maximum Tire Load**

***Tire Size***
Whenever tires are replaced, they should be replaced with tires of the same size. The following is an example of tire size with an explanation of what each component means.

P255/50R19 103H

P – Vehicle type (P indicates passenger vehicle).

255 – Tire width in millimeters.

50 – Aspect ratio (the tire's section height as a percentage of its width).

R – Tire construction code (R indicates radial).

19 – Rim diameter in inches.

103 – Load index (a numerical code associated with the maximum load the tire can carry).

H – Speed symbol (an alphabetical code indicating the maximum speed rating).

***Tire Identification Number (TIN)***
The tire identification number (TIN) is a group of numbers and letters that look like the following example. TIN is located on the sidewall of the tire.

DOT B97R FW6X 2202

DOT – This indicates that the tire meets all requirements of the U.S. Department of Transportation.

B97R – Manufacturer's identification mark.

FW6X – Tire type code.

2202 – Date of manufacture.
Year
Week

**Glossary of Tire Terminology**

**Cold Tire Pressure** – The tire air pressure when the vehicle has been parked for at least three hours or driven less than 1 mile (1.6 km).

**Load Rating** – Means the maximum load that a tire is rated to carry for a given inflation pressure.

**Maximum Inflation Pressure** – The maximum tire air pressure that the tire can hold.

**Maximum Load Rating** – Means the load rating for a tire at the maximum permissible inflation pressure for that tire.

**Recommended Inflation Pressure** – The cold tire inflation pressure recommended by the manufacturer.

**Treadwear Indicators (TWI)** – Means the projections within the principal grooves designed to give a visual indication of the degrees of wear of the tread.

# Tire Pressure Monitoring System (TPMS) – Required Federal Explanation

Each tire, including the spare (if provided), should be checked monthly when cold and inflated to the inflation pressure recommended by the vehicle manufacturer on the vehicle placard or tire inflation pressure label.

(If your vehicle has tires of a different size than the size indicated on the vehicle placard or tire inflation pressure label, you should determine the proper tire inflation pressure for those tires.)

As an added safety feature, your vehicle has been equipped with a tire pressure monitoring system (TPMS) that illuminates a low tire pressure telltale

when one or more of your tires is significantly under-inflated.

Accordingly, when the low tire pressure telltale illuminates, you should stop and check your tires as soon as possible, and inflate them to the proper pressure.

Driving on a significantly under-inflated tire causes the tire to overheat and can lead to tire failure. Under-inflation also reduces fuel efficiency and tire tread life, and may affect the vehicle's handling and stopping ability.

Please note that the TPMS is not a substitute for proper tire maintenance, and it is the driver's responsibility to maintain correct tire pressure, even if under-inflation has not reached the level to trigger illumination of the TPMS low tire pressure telltale.

Your vehicle has also been equipped with a TPMS malfunction indicator to indicate when the system is not operating properly. The TPMS malfunction indicator is combined with the low tire pressure telltale. When the system detects a malfunction, the telltale will flash for approximately one minute and then remain continuously illuminated. This sequence will continue upon subsequent vehicle start-ups as long as the malfunction exists.

When the malfunction indicator is illuminated, the system may not be able to detect or signal low tire pressure as intended.

TPMS malfunctions may occur for a variety of reasons, including the installation of replacement or alternate tires or wheels on the vehicle that prevent the TPMS from functioning properly.

Always check the TPMS malfunction telltale after replacing one or more tires or wheels on your vehicle to ensure that the replacement or alternate tires and wheels allow the TPMS to continue to function properly.

The burning of gasoline in your vehicle's engine produces several byproducts. Some of these are carbon monoxide (CO), oxides of nitrogen (NOx), and hydrocarbons (HC). Gasoline evaporating from the tank also produces hydrocarbons. Controlling the production of NOx, CO, and HC is important to the environment. Under certain conditions of sunlight and climate, NOx and HC react to form photochemical “smog.” Carbon monoxide does not contribute to smog creation, but it is a poisonous gas.

**The Clean Air Act**

The United States Clean Air Act* sets standards for automobile emissions. It also requires that automobile manufacturers explain to owners how their emissions controls work and what to do to maintain them. This section summarizes how the emissions controls work. Scheduled maintenance is on page 542.

* In Canada, Acura vehicles comply with the Canadian emission requirements, as specified in an agreement with Environment Canada, at the time they are manufactured.

**Crankcase Emissions Control System**

Your vehicle has a positive crankcase ventilation system. This keeps gasses that build up in the engine's crankcase from going into the atmosphere. The positive crankcase ventilation valve routes them from the crankcase back to the intake manifold. They are then drawn into the engine and burned.

**Evaporative Emissions Control System**

As gasoline evaporates in the fuel tank, an evaporative emissions control canister filled with charcoal adsorbs the vapor. It is stored in this canister while the engine is off. After the engine is started and warmed up, the vapor is drawn into the engine and burned during driving.

**Onboard Refueling Vapor Recovery**
The onboard refueling vapor recovery (ORVR) system captures the fuel vapors during refueling. The vapors are adsorbed in a canister filled with activated carbon. While driving, the fuel vapors are drawn into the engine and burned off.

**Exhaust Emissions Controls**
The exhaust emissions controls include four systems: PGM-FI, ignition timing control, exhaust gas recirculation, and three way catalytic converter. These four systems work together to control the engine's combustion and minimize the amount of HC, CO, and NOx that come out the tailpipe. The exhaust emissions control systems are separate from the crankcase and evaporative emissions control systems.

***PGM-FI System***
The PGM-FI system uses sequential multiport fuel injection. It has three subsystems: air intake, engine control, and fuel control. The powertrain control module (PCM) uses various sensors to determine how much air is going into the engine. It then controls how much fuel to inject under all operating conditions.

***Ignition Timing Control System***
This system constantly adjusts the ignition timing, reducing the amount of HC, CO, and NOx produced.

***Exhaust Gas Recirculation (EGR) System***
The exhaust gas recirculation (EGR) system takes some of the exhaust gas and routes it back into the intake manifold. Adding exhaust gas to the air/fuel mixture reduces the amount of NOx produced when the fuel is burned.

***Three Way Catalytic Converter***
The three way catalytic converter is in the exhaust system. Through chemical reactions, it converts HC, CO, and NOx in the engine's exhaust to carbon dioxide ($CO_2$), nitrogen ($N_2$), and water vapor.

**Replacement Parts**
The emissions control systems are designed and certified to work together in reducing emissions to levels that comply with the Clean Air Act. To make sure the emissions remain low, you should use only new Acura replacement parts or their equivalent for repairs. Using lower quality parts may increase the emissions from your vehicle.

The emissions control systems are covered by warranties separate from the rest of your vehicle. Read your warranty manual for more information.

# Three Way Catalytic Converter

The three way catalytic converter contains precious metals that serve as catalysts, promoting chemical reactions to convert the exhaust gasses without affecting the metals. The catalytic converter is referred to as a three-way catalyst, since it acts on HC, CO, and NOx. A replacement unit must be an original Acura part or its equivalent.

The three way catalytic converter must operate at a high temperature for the chemical reactions to take place. It can set on fire any combustible materials that come near it. Park your vehicle away from high grass, dry leaves, or other flammables.

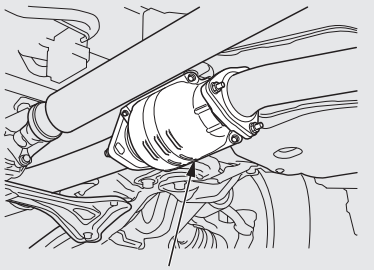

THREE WAY CATALYTIC CONVERTER

A defective three way catalytic converter contributes to air pollution, and can impair your engine's performance. Follow these guidelines to protect your vehicle's three way catalytic converter.

- Always use unleaded gasoline. Even a small amount of leaded gasoline can contaminate the catalyst metals, making the three way catalytic converter ineffective.

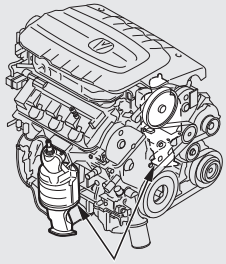

WARM UP THREE WAY CATALYTIC CONVERTERS

- Keep the engine well maintained.
- Have your vehicle diagnosed and repaired if it is misfiring, backfiring, stalling, or otherwise not running properly.

**Testing of Readiness Codes**
If you take your vehicle for an emissions test shortly after the battery has been disconnected or gone dead, it may not pass the test. This is because of certain "readiness codes" that must be set in the on-board diagnostics for the emissions systems. These codes are erased when the battery is disconnected, and set again only after several days of driving under a variety of conditions.

If the testing facility determines that the readiness codes are not set, you will be requested to return at a later date to complete the test. If you must get the vehicle retested within the next two or three days, you can condition the vehicle for retesting by doing the following.

1. Make sure the gas tank is nearly, but not completely, full (around 3/4).
2. Make sure the vehicle has been parked with the engine off for 6 hours or more.
3. Make sure the ambient temperature is between 40° and 95°F (4° and 35°C).
4. Without touching the accelerator pedal, start the engine, and let it idle for 20 seconds.
5. Keep the vehicle in Park. Increase the engine speed to 2,000 rpm, and hold it there until the temperature gauge rises to at least 1/4 of the scale (about 3 minutes).
6. Without touching the accelerator pedal, let the engine idle for 20 seconds.



*CONTINUED*

7. Select a nearby lightly traveled major highway where you can maintain a speed of 50 to 60 mph (80 to 97 km/h) for at least 20 minutes. Drive on the highway in D. Do not use the cruise control. When traffic allows, drive for 90 seconds without moving the accelerator pedal. (Vehicle speed may vary slightly; this is okay.) If you cannot do this for a continuous 90 seconds because of traffic conditions, drive for at least 30 seconds, then repeat it two more times (for a total of 90 seconds).
8. Then drive in city/suburban traffic for at least 10 minutes. When traffic conditions allow, let the vehicle coast for several seconds without using the accelerator pedal or the brake pedal.
9. Make sure the vehicle has been parked with the engine off for 30 minutes.

If the testing facility determines the readiness codes are still not set, see your dealer.

Client Service Information..... 622
Warranty Coverages ..... 623
Reporting Safety Defects (U.S. Vehicles)..... 624
Authorized Manuals..... 625

# Client Service Information

Acura dealership personnel are trained professionals. They should be able to answer all your questions. If you encounter a problem that your dealership does not solve to your satisfaction, please discuss it with the dealership's management. The service manager or general manager can help. Almost all problems are solved in this way.

If you are dissatisfied with the decision made by the dealership's management, contact Acura Client Services.

U.S. Owners:

American Honda Motor Co., Inc.
Acura Client Services
Mail Stop 500-2N-7E
1919 Torrance Blvd.
Torrance, CA 90501-2746

Tel: (800) 382-2238

Canadian Owners:

Acura Client Services
Honda Canada Inc.
Visit *www.acura.ca*
for contact information

Tel: 1-888-9-ACURA-9

Fax: 1-877-939-0909

In Puerto Rico and the U.S. Virgin Islands:

Vortex Motor Corp.
Bella International
P.O. Box 190816
San Juan, PR 00919-0816

Tel: (787) 620-7546

When you call or write, please give us this information:

- Vehicle Identification Number (see page 606)
- Name and address of the dealer who services your vehicle
- Date of purchase
- Odometer reading of your vehicle
- Your name, address, and telephone number
- A detailed description of the problem
- Name of the dealer who sold the vehicle to you

**U.S. Owners**
Your new vehicle is covered by these warranties:

***New Vehicle Limited Warranty*** – covers your new vehicle, except for the battery, emissions control systems, and accessories, against defects in materials and workmanship.

***Emissions Control Systems Defects Warranty and Emissions Performance Warranty*** – these two warranties cover your vehicle's emissions control systems. Time, mileage, and coverage are conditional. Please read your warranty booklet for exact information.

***Original Equipment Battery Limited Warranty*** – this warranty gives up to 100% credit toward a replacement battery.

***Seat Belt Limited Warranty*** – a seat belt that fails to function properly is covered by a limited warranty. Please read your warranty booklet for details.

***Rust Perforation Limited Warranty*** – all exterior body panels are covered for rust-through from the inside for the specified time period with no mileage limit.

***Accessory Limited Warranty*** – Acura accessories are covered under this warranty. Time and mileage limits depend on the type of accessory and other factors. Please read your warranty manual for details.

***Replacement Parts Limited Warranty*** – covers all Acura replacement parts against defects in materials and workmanship.

***Replacement Battery Limited Warranty*** – provides prorated coverage for a replacement battery purchased from your dealer.

***Replacement Muffler Lifetime Limited Warranty*** – provides coverage for as long as the purchaser of the muffler owns the vehicle.

Restrictions and exclusions apply to all these warranties. Please read the 2010 Acura warranty information booklet that came with your vehicle for precise information on warranty coverages. Your vehicle's original tires are covered by their manufacturer. Tire warranty information is in a separate booklet.

**Canadian Owners**
Please refer to the 2010 warranty manual that came with your vehicle.

# Reporting Safety Defects (U.S. Vehicles)

If you believe that your vehicle has a defect which could cause a crash or could cause injury or death, you should immediately inform the National Highway Traffic Safety Administration (NHTSA), in addition to notifying American Honda Motor Co., Inc.

If NHTSA receives similar complaints, it may open an investigation, and if it finds that a safety defect exists in a group of vehicles, it may order a recall and remedy campaign. However, NHTSA cannot become involved in individual problems between you, your dealer, or American Honda Motor Co., Inc.

To contact NHTSA, you may call the Vehicle Safety Hotline toll-free at 1-888-327-4236 (TTY: 1-800-424-9153); go to *http://www.safercar.gov;* or write to: Administrator, NHTSA, 1200 New Jersey Avenue, SE., Washington, DC 20590. You can also obtain other information about motor vehicle safety from *http://www.safercar.gov.*

## Purchasing Factory Authorized Manuals (U.S. only)

The publications shown below can be purchased from Helm Incorporated. You can order by phone or online:

- Call Helm Inc. at 1-800-782-4356 (credit card orders only)
- Go online at *www. helminc. com*

If you are interested in other years or models, contact Helm Inc. at 1-800-782-4356.

| Publication Form Number | Form Description |
|---|---|
| 61SZN00 | 2010 Acura ZDX Service Manual |
| 61SZN00EL | 2010 Acura ZDX Electrical Troubleshooting Manual |
| 61SZN30 | 2010 Acura ZDX Body Repair Manual |
| 31SZN600 | 2010 Acura ZDX Owner's Manual |
| 31SZN800 | 2010 Acura ZDX Navigation System Owner's Manual |
| 31SZNM00 | 2010 Acura ZDX Maintenance Journal |
| 31SZNQ00 | 2010 Acura ZDX Advanced Technology Guide |
| ACU-R | Order Form for Previous Years Indicate Year and Model Desired |

**Service Manual:**
Covers maintenance and recommended procedures for repair to engine and chassis components. It is written for the journeyman mechanic, but it is simple enough for most mechanically inclined owners to understand.

**Electrical Troubleshooting Manual:**
Complements the Service Manual by providing in-depth troubleshooting information for each electrical circuit in your vehicle.

**Body Repair Manual:**
Describes the procedures involved in the replacement of damaged body parts.

## A


Accessories and Modifications ..... 463
ACCESSORY (Ignition Key Position) ..... 150
Accessory Power Sockets ..... 217
AcuraLink® (U.S. models only) ..... 435
Adaptive Cruise Control (ACC) ..... 382
Additives, Engine Oil ..... 546
Adjusting the Steering Wheel .... 145
Advanced Airbags ..... 30
Airbag (SRS) ..... 10, 26
Air Conditioning System ..... 220
Air Pressure, Tires ..... 567, 568
Alcohol in Gasoline ..... 454
Antifreeze ..... 548
Anti-lock Brakes (ABS)
  Indicator ..... 67, 496
  Operation ..... 496
Anti-theft, Audio System ..... 374
Anti-theft Steering Column Lock ..... 150
Audio System ..... 228, 277
Automatic Climate Control ..... 221
Automatic Lighting Off Feature ..... 142
Automatic Seat Belt Tensioners ... 23
Automatic Speed Control ..... 379
Automatic Transmission ..... 477
  Capacity, Fluid ..... 608
  Checking Fluid Level ..... 551
  Driving with the Paddle Shifters ..... 482
  Shifting ..... 478
  Shift Lever Position Indicators ..... 477
  Shift Lever Positions ..... 478
  Shift Lock Release ..... 480
Auxiliary Input Jack ..... 371


## B


Battery
  Charging System Indicator ..... 65, 592
  Jump Starting ..... 587
  Maintenance ..... 573
  Specifications ..... 609
Before Driving ..... 453
Belts, Seat ..... 9, 21
Beverage Holders ..... 213
Blind Spot Information System (BSI) ..... 511
*Bluetooth*® Audio ..... 272, 360
*Bluetooth*® HandsFreeLink® (Models with navigation system) ..... 416
*Bluetooth*® HandsFreeLink® (Models without navigation system) ..... 399
Booster Seats ..... 55
Brakes
  Anti-lock Brakes (ABS) ..... 496
  Break-in, New Linings ..... 454
  Bulb Replacement ..... 558
  Fluid ..... 553
  Parking ..... 176
  System Design ..... 495
  System Indicator ..... 66, 594
  Wear Indicators ..... 495
Braking System ..... 495
Break-in, New Vehicle ..... 454


*CONTINUED*

Brightness Control,
Instruments ..... 144
Bulb Replacement
Back-up Lights ..... 558, 559
Brake Lights ..... 558
Daytime Running Lights ..... 556
Front Parking Lights ..... 555
Front Side Marker Lights ..... 555
Rear Bulbs ..... 558
Rear License Plate Lights ..... 560
Specifications ..... 609
Taillights ..... 558
Turn Signal Lights ..... 555, 558

## C

Capacities Chart ..... 608
Carbon Monoxide Hazard ..... 58
Cargo ..... 465
Cargo Area Light ..... 210
Cargo Hook ..... 469
Cargo, How to Carry ..... 465
Carrying Cargo ..... 465
CAUTION, Explanation of ..... iii
CD Care ..... 365
CD Error Messages ..... 311
CD Player ..... 244, 300
Chains, Tires ..... 572
Changing a Flat Tire ..... 579
Changing Oil
How to ..... 546
When to ..... 533
Charging System
Indicator ..... 65, 592
Checklist, Before Driving ..... 472
Check Starting System
Message ..... 474
Childproof Door Locks ..... 153
Child Safety ..... 39
Booster Seats ..... 55
Child Seats ..... 44, 45, 47
Important Safety Reminders ..... 42
Infants ..... 44
Larger Children ..... 54
LATCH ..... 49
Risks with Airbags ..... 40
Small Children ..... 45
Tethers ..... 53
Warning Labels ..... 41
Where Should a Child Sit? ..... 40
Child Seats ..... 39, 47
LATCH Anchorage Points ..... 49
Tether Anchorage Points ..... 53
Cleaning the Seat Belts ..... 562
Client Service Information ..... 622
Climate Control System ..... 220
Clock ..... 375
Coat Hook ..... 216
Code, Audio System ..... 374
CO in the Exhaust ..... 58, 616
Collision Mitigation Braking
System™ (CMBS™) ..... 498
Compact Spare Tire ..... 578
Console Compartment ..... 213
Consumer Information ..... 622
Controls, Instruments and ..... 61
Coolant
Adding ..... 548
Checking ..... 459
Proper Solution ..... 548
Temperature Gauge ..... 77
Courtesy Lights ..... 209
Crankcase Emissions Control
System ..... 616
Cruise Control Indicator ..... 71
Cruise Control Operation ..... 379

Cruise Main Indicator ..... 71
Cup Holders ..... 213
Customize Settings ..... 94

D

DANGER, Explanation of ..... iii
Dashboard ..... 3, 62
Daytime Running Lights ..... 141
Dead Battery ..... 587
Defects, Reporting Safety ..... 624
Defogger, Rear Window ..... 143
Defrosting the Windows ..... 225
Dimensions ..... 608
Dimming the Headlights ..... 139
Dipstick
  Automatic Transmission ..... 551
  Engine Oil ..... 458
Directional Signals ..... 68, 139
Disc Brake Wear Indicators ..... 495
Disc Care ..... 365
Disc Changer ..... 244
Disc Changer Error
  Messages ..... 254
Disc Player ..... 244, 300
Disc Player Error Messages ..... 311
Disposal of Used Oil ..... 547
Doors
  Childproof Door Locks ..... 153
  Locking and Unlocking ..... 151
  Lockout Prevention ..... 152
  Power Door Locks ..... 151
DOT Tire Quality Grading (U.S.
  Vehicles) ..... 610
Driver and Passenger Safety ..... 5
Driving ..... 471
  Economy ..... 460
Driving Guidelines ..... 472
Driving Position Memory
  System ..... 180
Driving with the Paddle
  Shifters ..... 482
Dust and Pollen Filter ..... 562

E

Economy, Fuel ..... 460
Electric Power Steering (EPS)
  Indicator ..... 74
Emergencies on the Road ..... 577
  Battery, Jump Starting ..... 587
  Brake System Indicator ..... 66, 594
  Changing a Flat Tire ..... 579
  Charging System
    Indicator ..... 65, 592
  Checking the Fuses ..... 596
  Driving with a Flat Tire ..... 578
  Hazard Warning Flashers ..... 143
  Jump Starting ..... 587
  Low Oil Pressure
    Indicator ..... 65, 591
  Malfunction Indicator
    Lamp ..... 65, 593
  Opening the Fuel Fill Door
    Manually ..... 602
  Overheated Engine ..... 589
  Towing ..... 602
Emergency Brake ..... 176
Emergency Flashers ..... 143
Emergency Towing ..... 602
Emissions Controls ..... 616
Emissions Testing ..... 619



*CONTINUED*

Engine
Adding Engine Coolant ..... 548
Coolant Temperature Gauge .... 77
If it Won't Start ..... 585
Malfunction Indicator Lamp ..... 65, 593
Oil Life Indicator ..... 533
Oil Pressure Indicator ..... 65, 591
Oil, What Kind to Use ..... 545
Overheating ..... 589
Specifications ..... 609
Speed Limiter ..... 480
Engine Coolant ..... 548
Ethanol in Gasoline ..... 454
Evaporative Emissions Controls ..... 616
Exhaust Fumes ..... 58
Exhaust Gas Recirculation System ..... 617
Expectant Mothers, Use of Seat Belts by ..... 19

F

Fan, Interior ..... 223
Features ..... 219
Filters
Dust and Pollen ..... 562
Oil ..... 546
Flashers, Hazard Warning ..... 143
Flat Tire, Changing a ..... 579
Floor Mats ..... 563
Fluids
Automatic Transmission ..... 551
Brake ..... 553
Location ..... 543
Power Steering ..... 554
Windshield Washer ..... 550
FM/AM Radio Reception ..... 369
Fog Lights ..... 141
Four-way Flashers ..... 143
Front Airbags ..... 10, 28
Front Seat ..... 161
Adjusting ..... 161
Front Seat Heaters and Seat Ventilation ..... 168
Fuel ..... 454
Economy ..... 460
Fill Door and Cap ..... 455
Gauge ..... 76
Low Fuel Indicator ..... 72
Octane Requirement ..... 454
Opening the Fuel Fill Door Manually ..... 602
Reserve Indicator ..... 72
Tank, Filling the ..... 455
Tighten Fuel Cap ..... 456
Fuel Economy ..... 460
Fuses, Checking the ..... 596

G

Gas Mileage, Improving ..... 461
Gasoline ..... 454
Gauge ..... 76
Low Fuel Indicator ..... 72
Octane Requirement ..... 454
Tank, Refueling ..... 455
Gas Station Procedures ..... 455
Gauges
Engine Coolant Temperature ... 77
Fuel ..... 76
Speedometer ..... 76
Tachometer ..... 76
GAWR (Gross Axle Weight Rating) ..... 523

GCWR (Gross Combined Weight Rating) ..... 523
Gearshift Lever Positions
Automatic Transmission ..... 477, 478
Glove Box ..... 215
Gross Axle Weight Rating (GAWR) ..... 523
Gross Vehicle Weight Rating (GVWR) ..... 523
GVWR (Gross Vehicle Weight Rating) ..... 523

## H

Hazard Warning Flashers ..... 143
Headlights ..... 139
Aiming ..... 555
Automatic Lighting Off ..... 142
Daytime Running Lights ..... 141
High Beam Indicator ..... 71
High Beams, Turning on ..... 139
Lights On Indicator ..... 71
Low Beams, Turning on ..... 139
Reminder Chime ..... 139
Turning on ..... 139
Washers ..... 138
Head Restraints ..... 162
Heaters, Seats ..... 167, 168
Heating and Cooling ..... 220
High-Low Beam Switch ..... 139
HomeLink® Universal Transceiver ..... 396
Hood, Opening and Closing the ..... 457
Horn ..... 4, 136

## I

Identification Number, Vehicle ..... 606
Ignition
Keys ..... 147
Switch ..... 150
Timing Control System ..... 617
Immobilizer System ..... 149
Important Safety Precautions ..... 6
Indicators, Instrument Panel ..... 63
ABS (Anti-lock Brake) ..... 67, 496
Active Damper System ..... 72
Adaptive Cruise Control (ACC) ..... 73
Brake (Parking and Brake System) ..... 66, 594
Charging System ..... 65, 592
Collision Mitigation Braking System™ ..... 74
Cruise Control ..... 71
Cruise Main ..... 71
Door and Tailgate Open ..... 69
Electric Power Steering ..... 74
Fog Lights ..... 71
High Beam ..... 71
Key (Immobilizer System) ..... 70
Lights On ..... 71
Low Fuel ..... 72
Low Oil Pressure ..... 65, 591
Low Tire Pressure ..... 69
Maintenance Minder ..... 533
Malfunction Indicator Lamp ..... 65, 593
Passenger Airbag Off ..... 36
Seat Belt Reminder ..... 21, 64
Security System ..... 72
SH-AWD® ..... 70

*CONTINUED*

Side Airbag Off ..... 35, 67
SRS ..... 34, 66
System Message ..... 69, 89
Tire Pressure Monitor ..... 69
Turn Signal and Hazard Warning ..... 68
VSA OFF ..... 68
VSA System ..... 67
Individual Map Lights ..... 209
Infant Restraint ..... 44
Infant Seats ..... 44
Tether Anchorage Point ..... 53
Inflation, Proper Tire ..... 567
Inside Mirror ..... 177
Inspection, Tire ..... 569
Installing a Child Seat ..... 48
Instrument Panel ..... 63
Instrument Panel Brightness ..... 144
Instruments and Controls ..... 61
Integrated Dynamics System (IDS) ..... 519
Interface Dial ..... 277
Interior Care ..... 576
Interior Lights ..... 208
Courtesy Lights ..... 209
Introduction ..... i
iPod® ..... 255, 340
iPod® Error Messages ..... 263, 348

**J**

Jacking up the Vehicle ..... 579
Jack, Tire ..... 579
Jump Starting ..... 587

**K**

Keyless Access System ..... 183
Keys ..... 147

**L**

Label, Certification ..... 606
Lane Change, Signaling ..... 139
Lap/Shoulder Belt ..... 16, 22
LATCH Anchorage System ..... 49
Light Control Buttons ..... 208
Lights
Bulb Replacement ..... 555
Indicator ..... 63
Interior ..... 208
Parking ..... 139
Load Limit ..... 466, 522
LOCK (Ignition Key Position) .... 150
Locks
Anti-theft Steering Column ..... 150
Childproof Door ..... 153
Fuel Fill Door ..... 455
Glove Box ..... 215
Lockout Prevention ..... 152
Power Door ..... 151
Tailgate ..... 153
Low Coolant Level ..... 459
Lower Anchors ..... 49
Low Fuel Indicator ..... 72
Low Oil Pressure Indicator ..... 65, 591
Lubricant Specifications Chart ... 608
Luggage, Storing (cargo) ..... 465

**M**

Maintenance ..... 531
Main Items and Sub Items ..... 538
Minder ..... 533

Owner's Maintenance Checks ..... 541
Safety ..... 532
Schedule ..... 542
Malfunction Indicator Lamp ..... 65, 593
Memory, Driving Position ..... 180
Message Display ..... 89
Message Indicator ..... 69
Meters, Gauges ..... 76
Methanol in Gasoline ..... 454
Mirrors, Adjusting ..... 178
Modifications ..... 464
Modifying Your Vehicle ..... 464
Multi-Information Display ..... 78

## N

Neutral Gear Position ..... 479
New Vehicle Break-in ..... 454
NOTICE, Explanation of ..... i
Numbers, Identification ..... 606

## O

Octane Requirement, Gasoline ..... 454
Odometer ..... 82
Odometer, Trip ..... 82
Off-Highway Driving Guidelines ..... 528
Off-Road Precautions ..... 528
Oil
Change, How to ..... 546
Change, When to ..... 533
Checking Engine ..... 458
Life, Engine ..... 533
Pressure Indicator ..... 65, 591
Selecting Proper Viscosity Chart ..... 545
ON (Ignition Key Position) ..... 150
Outside Mirrors ..... 177
Outside Temperature ..... 83
Overheating, Engine ..... 589
Owner's Maintenance Checks .... 541
Oxygenated Fuels ..... 454

## P

Panel Brightness Control ..... 144
Panoramic Glass Roof ..... 174
Park Gear Position ..... 478
Parking ..... 489
Parking Brake ..... 176
Parking Brake and Brake System Indicator ..... 66, 594
Parking Lights ..... 139
Parking Over Things that Burn ..... 489, 618
Passenger Airbag Off Indicator .... 36
PGM-FI System ..... 617
Playing a Disc ..... 244, 300
Playing an iPod® ..... 255, 340
Playing a USB Flash Memory Device ..... 264, 349
Playing Hard Disc Drive (HDD) Audio (Models with navigation system) ..... 312
Playing the AM/FM Radio ..... 230, 278
Playing the XM® Radio ..... 238, 291
Pollen Filter ..... 562

*CONTINUED*

Power Seat Adjustments ..... 161
Power Socket Locations ..... 217
Power Steering Fluid ..... 554
Power Windows ..... 171
Pregnancy, Using Seat Belts ..... 19
Preparing to Drive ..... 472
Proper Seat Belt Usage ..... 16
Protecting Adults and Teens ..... 12
Additional Safety Precautions ... 20
Advice for Pregnant Women .... 19
Protecting Children ..... 39
General Guidelines ..... 39
Protecting Infants ..... 44
Protecting Larger Children ..... 54
Protecting Small Children ..... 45
Using Child Seats with Tethers ..... 53
Using LATCH ..... 49

## R

Radiator Overheating ..... 589
Radio/CD Sound System ..... 228
Radio/Disc Sound System ..... 230, 278
Radio Theft Protection ..... 374
Readiness Codes ..... 619
Rear Lights, Bulb Replacement ..... 558
Rear Seat Heaters (Canadian models) ..... 170
Rearview Mirror ..... 177
Rearview Mirror with Rearview Camera Display ..... 451
Rear Window Defogger ..... 143
Reclining the Seat Backs ..... 161
Refueling ..... 455
Reminder Indicators ..... 64
Remote Audio Controls ..... 371
Remote Transmitter ..... 157
Replacement Information
Dust and Pollen Filter ..... 562
Engine Oil and Filter ..... 546
Fuses ..... 595
Light Bulbs ..... 555
Schedule ..... 542
Spark Plugs ..... 609
Timing Belt ..... 554
Tires ..... 570
Wiper Blades ..... 564
Replacing Seat Belts After a Crash ..... 25
Reporting Safety Defects (U.S. only) ..... 624
Reserve Tank, Engine Coolant ..... 459, 548
Restraint, Child ..... 39
Reverse Gear Position ..... 479
Rotation, Tire ..... 570

## S

Safety Belts ..... 9, 21
Safety Defects, Reporting (U.S. only) ..... 624
Safety Features ..... 8
Airbags ..... 10, 26
Door Locks ..... 12
Head Restraints ..... 15
Seat Belts ..... 9, 16, 21
Seats & Seat-Backs ..... 14, 15
Safety Labels, Location of ..... 59
Safety Messages ..... iii
Seat Belt e-pretensioners ..... 24

Seat Belts ..... 9, 21
Additional Information ..... 21
Advice for Pregnant Women .... 19
Automatic Seat Belt Tensioners ..... 23
Cleaning ..... 562
e-pretensioner ..... 24
Lap/Shoulder Belt ..... 16, 22
Maintenance ..... 25
Reminder Indicator and Beeper ..... 21, 64
System Components ..... 21
Use During Pregnancy ..... 19
Wearing a Lap/Shoulder Belt ..... 16, 22
Seats ..... 161
Head Restraints ..... 162
Heaters ..... 167, 168
Position Memory ..... 180
Ventilation ..... 168
Seats, Adjusting the ..... 161
Security System ..... 378
Security System Indicator ..... 72
Sensors
Driver's Seat Position Sensor ... 30
Front Passenger's Weight Sensors ..... 30
Impact Sensors ..... 26
Serial Number ..... 606
Service Intervals ..... 533
Service Manual (U.S. only) ..... 625
Service Station Procedures ..... 455
Setting the Clock ..... 375
SH-AWD® ..... 487
Indicator ..... 70
Shifting the Automatic Transmission ..... 478
Shift Lever Position Indicators ... 477
Shift Lock Release ..... 480
Side Airbags ..... 32
How the Side Airbag Off Indicator Works ..... 35
How Your Side Airbags Work .. 32
Side Curtain Airbags ..... 33
How Your Side Curtain Airbags Work ..... 33
Side Marker Lights, Bulb Replacement in ..... 555
Signaling Turns ..... 68
Snow Tires ..... 571
Sound System ..... 228, 277
Spare Tire ..... 578
Inflating ..... 567, 578
Specifications ..... 609
Spark Plugs ..... 609
Specifications ..... 608
Speed Control ..... 379
Speed Limiter ..... 480
Speedometer ..... 76
SRS, Additional Information ..... 26
Additional Safety Precautions ... 37
Airbag Service ..... 37
Airbag System Components ..... 26
How the Side Airbag Off Indicator Works ..... 35
How the SRS Indicator Works .. 34
How Your Front Airbags Work ..... 28
How Your Side Airbags Work .. 32
How Your Side Curtain Airbags Work ..... 33
SRS Indicator ..... 34, 66
START (Ignition Key Position) ..... 150
Starting the Engine
With a Dead Battery ..... 587

*CONTINUED*

Starting the Engine (Models with Keyless Access System) ..... 475
Starting the Engine (Models without Keyless Access System) ..... 473
Steam Coming from Engine ..... 589
Steering Wheel
Adjustments ..... 145
Anti-theft Column Lock ..... 150
Buttons ..... 371, 379
Position Memory ..... 180
Stereo Sound System ..... 228, 277
Storage Compartments ..... 214
Storing Your Vehicle ..... 575
Sunglasses Holder ..... 215
Sun Visor ..... 216
Super Handling-All Wheel Drive™ (SH-AWD®) System ..... 487
Supplemental Restraint System ..... 10, 26
Servicing ..... 37
SRS Indicator ..... 34, 66
System Components ..... 26
Synthetic Oil ..... 546

## T

Tachometer ..... 76
Tailgate ..... 153
Open Indicator ..... 69
Opening the ..... 153
Open Monitor ..... 12
Power ..... 153
Taillights, Changing Bulbs in ..... 558
Taking Care of the Unexpected ..... 577
Technical Descriptions
DOT Tire Quality Grading (U.S. Vehicles) ..... 610
Emissions Control Systems ..... 616
Three Way Catalytic Converter ..... 618
Tire Labeling ..... 612
Tire Pressure Monitoring System (TPMS) – Required Federal Explanation ..... 614
Temperature Gauge ..... 77
Temperature, Outside ..... 83
Tensioners, Seat Belts ..... 23
Tether Anchorage Points ..... 53
Theft Protection, Radio ..... 374
Three Way Catalytic Converter ..... 618
Tilt/Telescopic Steering Wheel ..... 145
Time, Setting the ..... 375
Timing Belt ..... 554
Tire Chains ..... 572
Tire, How to Change a Flat ..... 579
Tire Information ..... 612
Tire Labeling ..... 612
Tire Pressure Monitoring System (TPMS) ..... 490, 614
Low Tire Pressure Indicator ..... 69, 490
Tire Pressure Monitor ..... 84, 491
Tires ..... 567
Air Pressure ..... 568
Checking Wear ..... 569
Compact Spare ..... 578
DOT Tire Quality Grading (U.S. Vehicles) ..... 610
Inflation ..... 567
Inspection ..... 569
Labeling ..... 612
Maintenance ..... 570

Pressure Monitoring System ... 490
Replacing ... 570
Rotating ... 570
Snow ... 571
Specifications ... 609
Tire Chains ... 572
Tools, Tire Changing ... 579
Towing
A Trailer ... 522
Emergency Wrecker ... 602
Equipment and Accessories ... 524
Trailer Loading ... 523
Trailer Towing Tips ... 525
Weight Limit ... 522
TPMS (Tire Pressure Monitoring System) ... 490
Required Federal Explanation ... 614
Transmission
Checking Fluid Level ... 551
Fluid Selection ... 551
Identification Number ... 606
Shifting the Automatic ... 478
Treadwear ... 569
Trip Computer ... 87
Trip Meter ... 82
Turn Signals ... 68

U

Under Floor Storage ... 214
Unexpected, Taking Care of the ... 577
Uniform Tire Quality Grading ... 610
Unleaded Gasoline ... 454
USB Flash Memory Device Error Messages ... 271, 359
Used Oil, How to Dispose of ... 547

V

Vanity Mirror ... 217
Vehicle Capacity Load ... 466
Vehicle Dimensions ... 608
Vehicle Identification Number ... 606
Vehicle Stability Assist (VSA®), aka Electronic Stability Control (ESC), System
VSA OFF Indicator ... 508
Vehicle Stability Assist (VSA) System ... 508
VSA OFF Button ... 509
VSA OFF Indicator ... 68
VSA System Indicator ... 67
Vehicle Storage ... 575
VIN ... 606
Viscosity, Oil ... 545

W

WARNING, Explanation of ... iii
Warning Labels, Location of ... 59
Warranty Coverages (U.S. only) ... 623
Washer, Windshield
Checking the Fluid Level ... 550
Operation ... 137
Wheels
Adjusting the Steering ... 145
Alignment and Balance ... 570
Aluminum Alloy Wheels ... 572
Cleaning ... 572
Compact Spare ... 578
Wrench, Nut ... 579


*CONTINUED*

Windows
Auto Reverse ..... 171
Operating the Power ..... 171
Rear, Defogger ..... 143
Windshield
Cleaning ..... 137
Defroster ..... 225
Washers ..... 137, 550
Wipers, Windshield
Changing Blades ..... 564
Operation ..... 137
Worn Tires ..... 569
Wrecker, Emergency Towing .... 602

## X

XM® Radio ..... 238, 291

# Service Information Summary

**Gasoline:**
Premium unleaded gasoline, pump octane number of 91 or higher.

**Fuel Tank Capacity:**
21.00 US gal (79.5 L)

**Recommended Engine Oil:**
API Premium grade 5W-20 detergent oil (see page 545).

Oil change capacity (including filter):
4.5 US qt (4.3 L)

**Automatic Transmission Fluid:**
Acura ATF-Z1 (automatic transmission fluid) (see page 552).

**Rear Differential Fluid:**
Use Acura ATF-Z1 (automatic transmission fluid) only.

Capacity:
SH-AWD differential case
2.67 US qt (2.53 L)

**Transfer Assembly Fluid:**
SAE 90 or SAE 80W-90 viscosity hypoid gear oil, API service classified GL4 or GL5 only.

**Power Steering Fluid:**
Acura Power Steering Fluid preferred, or another brand of power steering fluid as a temporary replacement. Do not use ATF (see page 554).

**Brake Fluid:**
Honda Heavy Duty Brake Fluid DOT 3 preferred, or a DOT 3 or DOT 4 brake fluid as a temporary replacement (see page 553).

**Tire Pressure (measured cold):**
Front/Rear:
32 psi (220 kPa, 2.2 kgf/cm$^2$)
Compact Spare Tire:
60 psi (420 kPa, 4.2 kgf/cm$^2$)