CAN COMMUNICATION SYSTEM

PRECAUTION

1. STEERING SYSTEM HANDLING PRECAUTIONS

(a) Care must be taken when replacing parts. Incorrect replacement could affect the performance of the steering system and result in hazardous driving.

2. SRS AIRBAG SYSTEM HANDLING PRECAUTIONS

(a) This vehicle is equipped with an SRS (Supplemental Restraint System) which includes parts such as the driver airbag and front passenger airbag. Failure to carry out service operations in the correct sequence could cause unexpected SRS deployment during servicing and may lead to a serious accident. Before servicing (including removal or installation of parts, inspection or replacement), be sure to read the precautionary notice for the Supplemental Restraint System (See page RS-1).

CA

3. BUS WIRE REPAIR

(a) After repairing a bus wire with solder, wrap the repaired part with vinyl tape.

NOTICE:

- **The CANL bus wire and CANH bus wire must be installed together at all times.**
- **When installing, make sure that they are twisted.**
- **CAN bus wires are likely to be influenced by noise if the bus wires are not twisted.**
- **The difference in length between the CANL bus wire and CANH bus wire should be within 100 mm (3.937 in.).**
- **Leave approximately 80 mm (3.150 in.) loose in the twisted wires around the connector.**

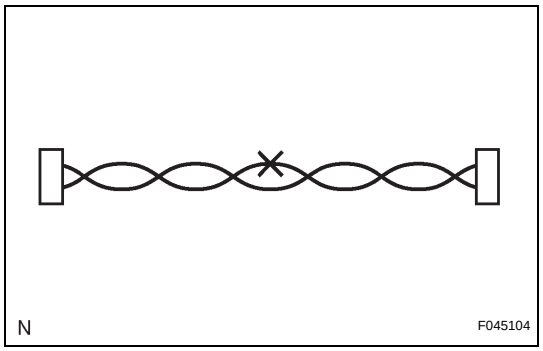

(b) Do not use bypass wiring between the connectors.

NOTICE:

The protective effect of the twisted wire harness will be lost if you use bypass wiring.

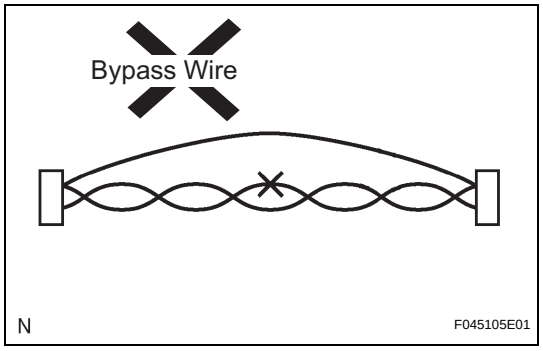

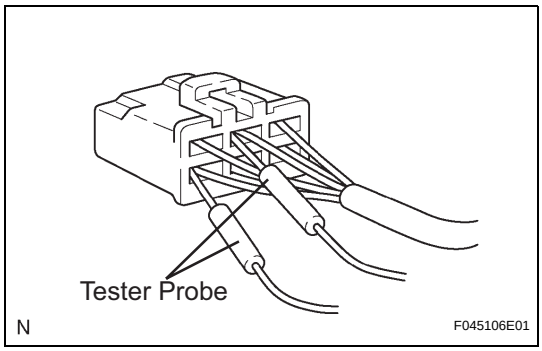

4. CONNECTOR HANDLING

(a) When checking resistance with a tester, insert the tester probes from the backside (harness side) of the connector.

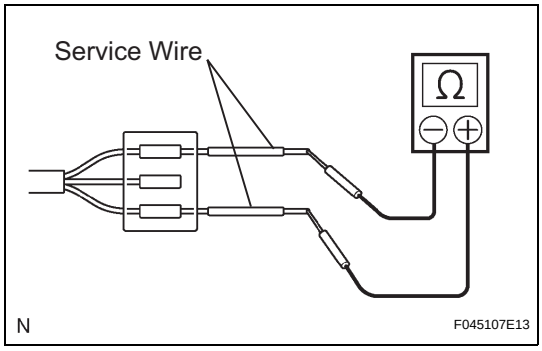

(b) Use a service wire to check the connector if it is impossible to check continuity from the rear of the connector.

5. EXPRESSIONS OF IGNITION SWITCH

The type of ignition switch used on this model differs according to the specifications of the vehicle.
The expressions listed in the table below are used in this section.

CA

Expression	Switch Type	
	Ignition Switch (Position)	Engine Switch (Condition)
Ignition switch off	LOCK	Off
Ignition switch on (IG)	ON	On (IG)
Ignition switch on (ACC)	ACC	ON (ACC)
Engine start	START	Start

PARTS LOCATION

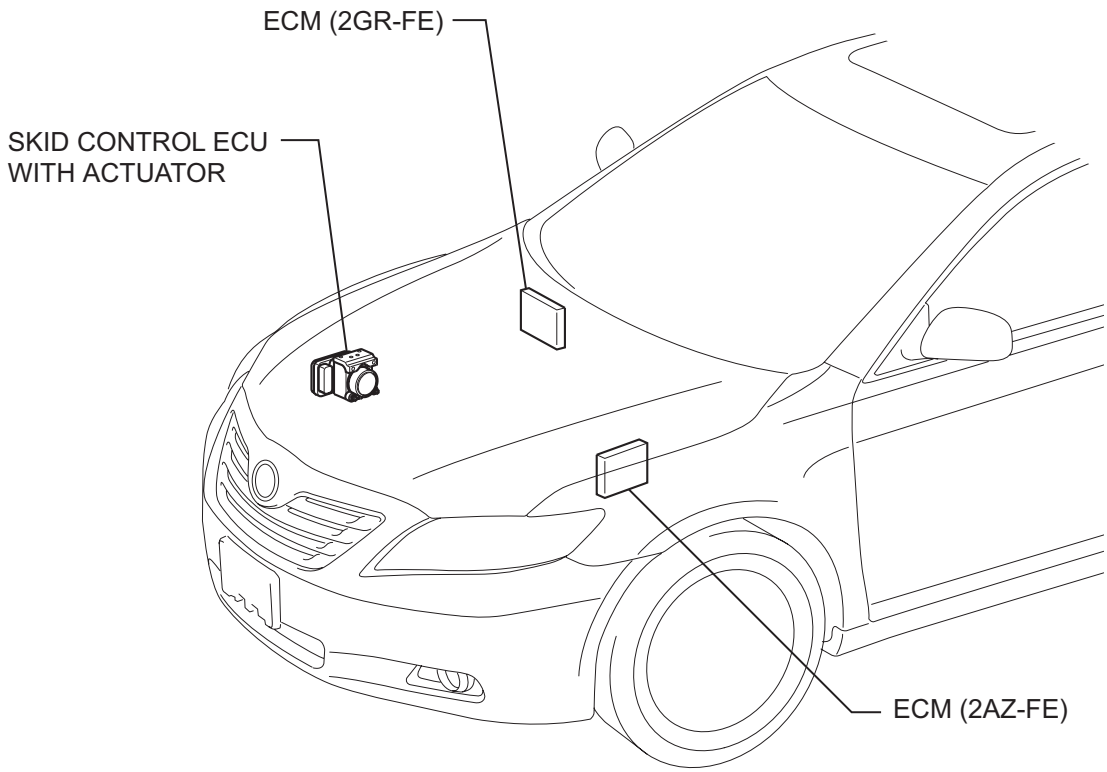

C

C136705E03

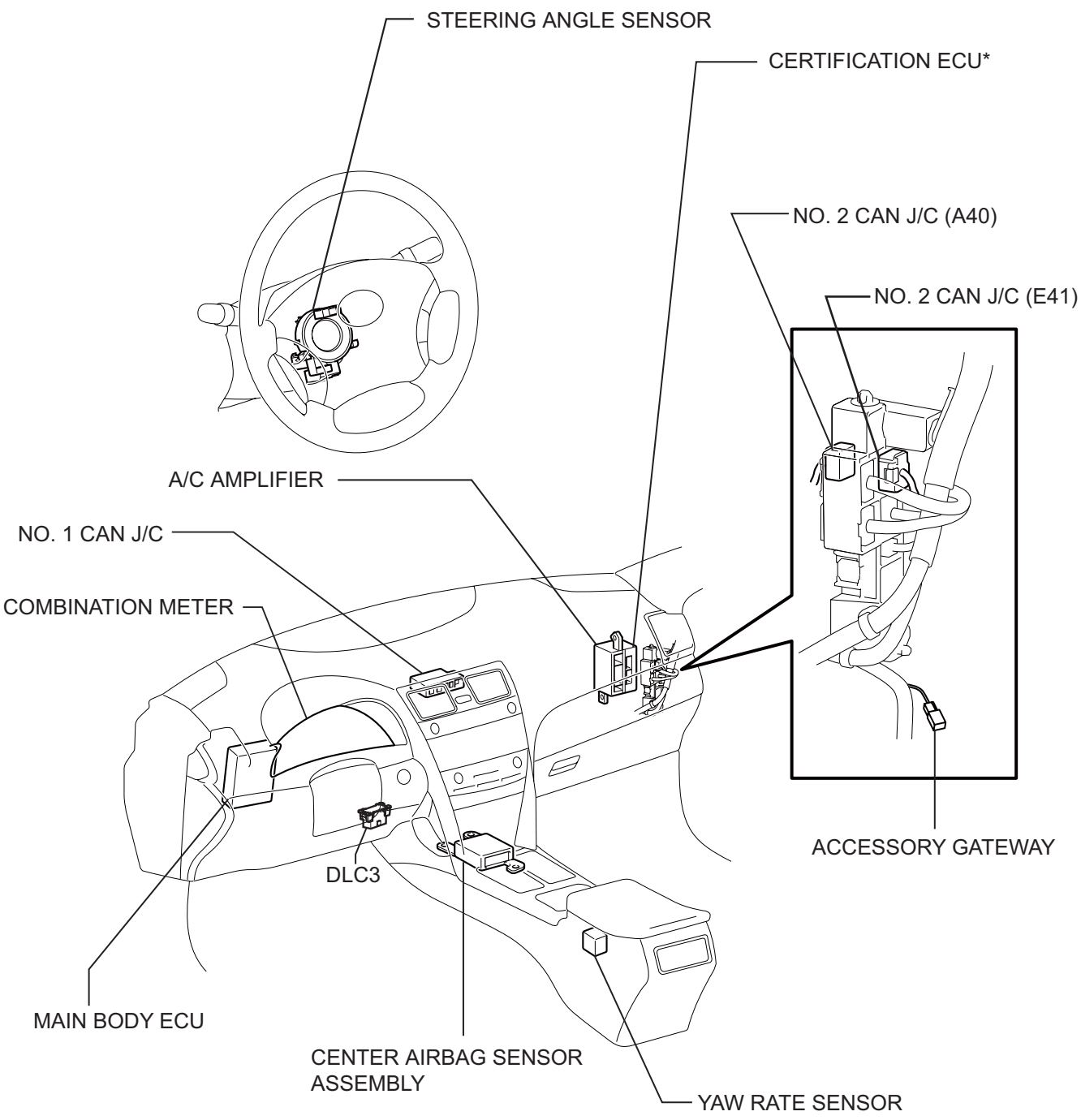

*: With Smart Key System

C

C133236E01

SYSTEM DIAGRAM

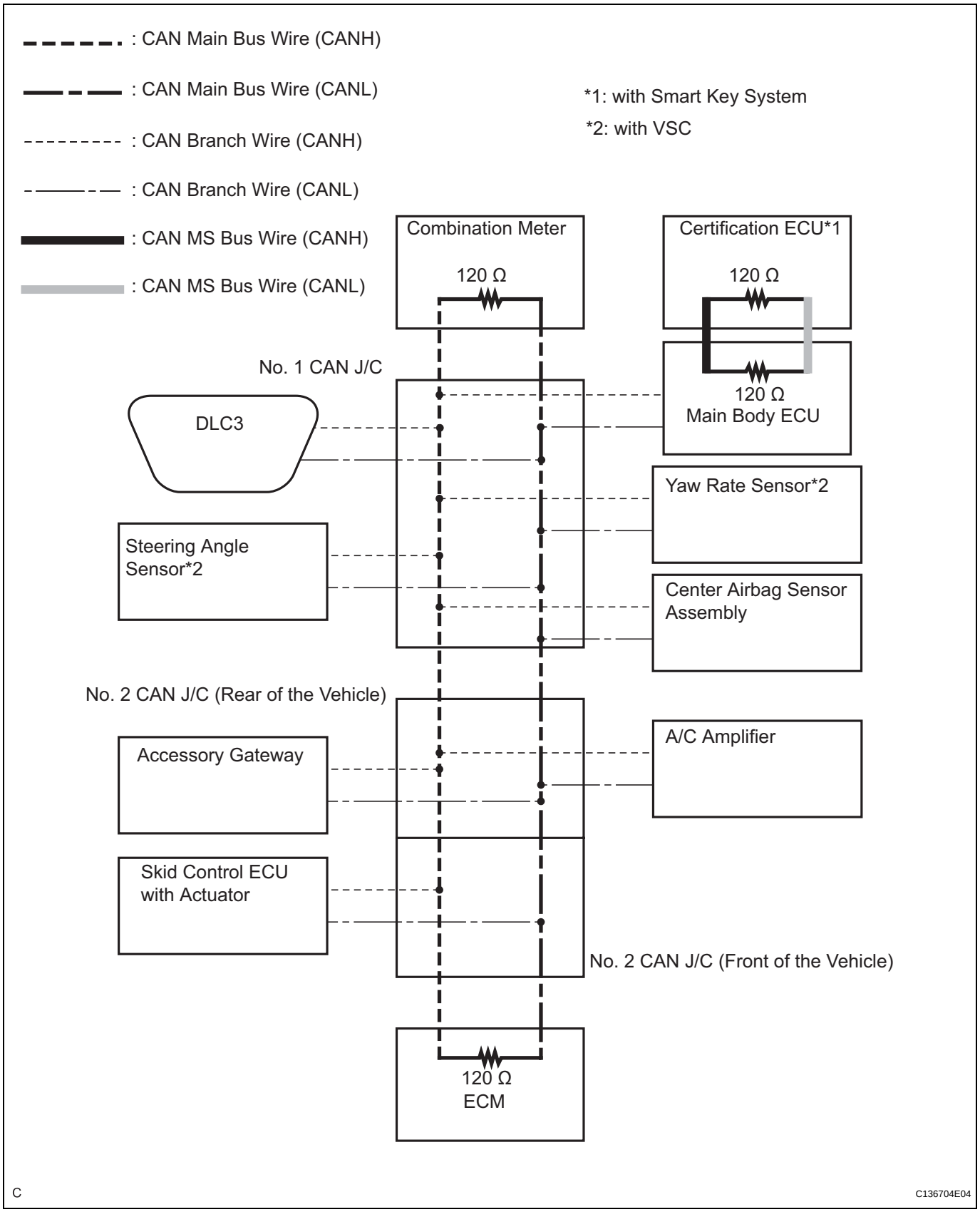

CA

HINT:

- The skid control ECU detects and stores steering angle sensor and yaw rate sensor DTCs and allows DTC communication by receiving information from the steering angle sensor and yaw rate sensor.

SYSTEM DESCRIPTION

1. BRIEF DESCRIPTION

(a) Two different CAN busses are used. The CAN busses are classified into two types based on typical communication speed.
The HS-CAN bus is a high-speed communication bus that is used for powertrain, chassis, and some body electrical communication. The HS-CAN bus is referred to as the "CAN bus" and it operates at speeds of approximately 500 kbps. Terminating resistors for the HS-CAN bus are located in the ECM and combination meter.
The MS-CAN bus is a medium-speed communication bus that is used for body electrical communication. The MS-CAN bus is referred to as the "MS bus" and it operates at speeds of approximately 250 kbps. Terminating resistors for the MS-CAN bus are located in the main body ECU and the certification ECU. The resistance of the MS-CAN bus cannot be measured from the DLC3 connector.
Communication between these two networks is handled via the main body ECU, which acts as a gateway ECU.

(b) By pairing the CANH and CANL bus wires, the CAN performs communication based on differential voltage.

(c) Many ECUs (sensors) installed on the vehicle operate by sharing information and communicating with each other.

(d) The CAN has two resistors of 120 Ω which are necessary to enable communication on the main bus wire.

2. DEFINITION OF TERMS

(a) Main bus wire

(1) The main bus wire is a wire harness between the two terminus circuits on the bus (communication line).

(b) Branch wire

(1) The branch wire is a wire harness which diverges from the main bus wire to an ECU or sensor.

(c) Terminating resistors

(1) Two resistors of 120 Ω resistance are installed in parallel across the ends of the CAN main bus wires. They are called terminating resistors. These resistors allow the changes of the voltage differential between the CAN bus wires to be accurately judged. To allow proper function of CAN communication, it is necessary to have both terminating resistors installed. Since the two resistors are installed in parallel, a measurement of resistance between the two CAN bus wires should produce a reading of approximately 60 Ω.

3. ECUS OR SENSORS WHICH COMMUNICATE THROUGH CAN COMMUNICATION SYSTEM

(a) Skid control ECU with actuator
(b) Air conditioning amplifier
(c) Main body ECU
(d) Combination meter ECU
(e) Yaw rate sensor
(f) Steering angle sensor
(g) Center airbag sensor
(h) ECM
(i) Certification ECU (with smart key system)
(j) TCM
(k) Accessory gateway

4. DIAGNOSTIC CODE FOR CAN COMMUNICATION SYSTEM

(a) DTCs for the CAN communication system are as follows: U0101, U0073, U0100, U0123, U0124, U0126, U0129, B1207, B1499, and B2326.

5. TROUBLESHOOTING REMARKS

(a) DTCs for the CAN communication system can be checked using the intelligent tester via the CAN VIM. The DLC3 is connected to the CAN communication system, but no DTCs exist regarding problems in the DLC3 or the DLC3 branch wires. If there is trouble in the DLC3 or the DLC3 branch wires, ECUs on the CAN network cannot output codes to the intelligent tester via the CAN VIM.

(b) Trouble in the CAN buses (communication lines) can be checked by measuring the resistance between terminals of the DLC3. However, an open circuit in a branch wire other than the DLC3 branch wires cannot be checked from the DLC3.

NOTICE:
Do not insert the tester probes directly into the DLC3. Be sure to use a service wires.

6. HOW TO DISTINGUISH THE CAN J/C CONNECTOR

(a) In the CAN communication system, the shape of all connectors connected to the CAN J/C No. 1 is the same. The connectors connected to the CAN J/C No. 1 can be connecting side of the junction connector.

HINT:

See "TERMINALS OF ECU" (See page CA-10) for bus wire color or the type of connecting surface.

HOW TO PROCEED WITH TROUBLESHOOTING

NOTICE:

- **DTCs for the CAN communication system are as follows: U0101, U0073, U0100, U0123, U0124, U0126, B1207, B1499, and B2326.**
- **Refer to troubleshooting of each system if DTCs regarding the CAN communication system are not output.**

1	CHECK AND CLEAR DTCS

NEXT

2	CHECK FOR INSTALLED SYSTEMS (ECUS & SENSORS) THAT ADOPT CAN COMMUNICATION)

CA

(a) Check which of the following is adopted: SFI system, automatic transaxle system, brake control system, supplemental restraint system, smart key system, air conditioning system and meter / gauge system (See page CA-25).

NEXT

3	CHECK CAN BUS LINE

(a) Check the CAN bus wires (See page CA-65).

NEXT

4	CHECK INTELLIGENT TESTER

(a) Select "Communication Bus Check" (See page CA-25).

Result

Symptom	Proceed	See procedure
All the ECUs and sensors connected to the CAN communication system are displayed on the screen.	A	Go to step 5
An ECU or sensor not connected to the CAN communication system is displayed on the screen.	B	CA-10
More than one of the ECUs and sensors not connected to the CAN communication system are displayed on the screen. (If the displayed ECUs and sensors are only those relating to the "Engine" and "ECT", proceed to B.)	C	CA-119

NOTICE:

- **The systems (ECUs, sensors) that adopt CAN communication vary depending on the vehicle and option settings. Check which systems (ECUs, sensors) are installed on the vehicle (See page CA-25).**

- **Non-installed ECUs or sensors are not displayed. Do not mistake ECUs that are not installed as being in communication stop mode.**
- **If 2 or more ECUs or sensors are not displayed on the intelligent tester, perform troubleshooting for communication stop mode for each undisplayed ECU or sensor. (Open in one side of the CAN branch wires.)**

B → **GO TO "COMMUNICATION STOP MODE TABLE"**

C → **GO TO "OPEN IN ONE SIDE OF CAN BRANCH LINE"**

A

5	DTC COMBINATION TABLE

(a) Confirm trouble according to the combination of output DTCs regarding the CAN communication system (See page CA-25).
HINT:
Previous CAN communication system DTCs may be the cause if CAN communication system DTCs are output and all ECUs and sensors connected to the CAN communication system are displayed on the intelligent tester "Communication Bus Check" screen.

CA

NEXT

6	CIRCUIT INSPECTION

NEXT

7	IDENTIFICATION OF PROBLEM

NEXT

8	REPAIR OR REPLACE

NEXT

9	CONFIRMATION TEST

NEXT

END

PROBLEM SYMPTOMS TABLE

RESULT LIST OF HOW TO PROCEED WITH TROUBLESHOOTING:

Symptom	Suspected area	See page
The result of "HOW TO PROCEED WITH TROUBLESHOOTING" is "Open in CAN Main Bus Line"	Open in CAN Main Bus Wire	CA-69
The result of "HOW TO PROCEED WITH TROUBLESHOOTING" is "Short in CAN Bus Line"	Short in CAN Bus Wires	CA-74
The result of "HOW TO PROCEED WITH TROUBLESHOOTING" is "Short to +B in CAN Bus Line"	Short to B+ in CAN Bus Wire	CA-89
The result of "HOW TO PROCEED WITH TROUBLESHOOTING" is "Short to GND in CAN Bus Line"	Short to GND in CAN Bus Wire	CA-104
The result of "HOW TO PROCEED WITH TROUBLESHOOTING" is "Open in One Side of CAN Sub Bus Line"	Open in One Side of CAN Branch Wire	CA-119

COMMUNICATION STOP MODE TABLE:

Symptom	Suspected area	See page
"ABS/VSC/TRAC" is not displayed on the intelligent tester (with VSC)	Skid Control ECU Communication Stop Mode	CA-42
"A/C " is not displayed on the intelligent tester	Air Conditioning Amplifier Communication Stop Mode	CA-46
"Body/Gateway" is not displayed on the intelligent tester	Main Body ECU Communication Stop Mode	CA-57
"Steering Angle Sensor" is not displayed on the intelligent tester	Steering Angle Sensor Communication Stop Mode	CA-49
"Yaw Rate/Deceleration Sensor" is not displayed on the intelligent tester	Yaw Rate Sensor Communication Stop Mode	CA-51
"Engine" are not displayed on the intelligent tester	ECM Communication Stop Mode	CA-54
"Meter " is not displayed on the intelligent tester	Combination Meter Communication Stop Mode	CA-61
"SRS Airbag" is not displayed on the intelligent tester	Center Airbag Sensor Communication Stop Mode	CA-63

TERMINALS OF ECU

NOTICE:
This section describes the standard CAN values for all CAN related components.

1. JUNCTION CONNECTOR (NO. 1 CAN J/C, NO. 2 CAN J/C)

(a) No. 1 CAN J/C

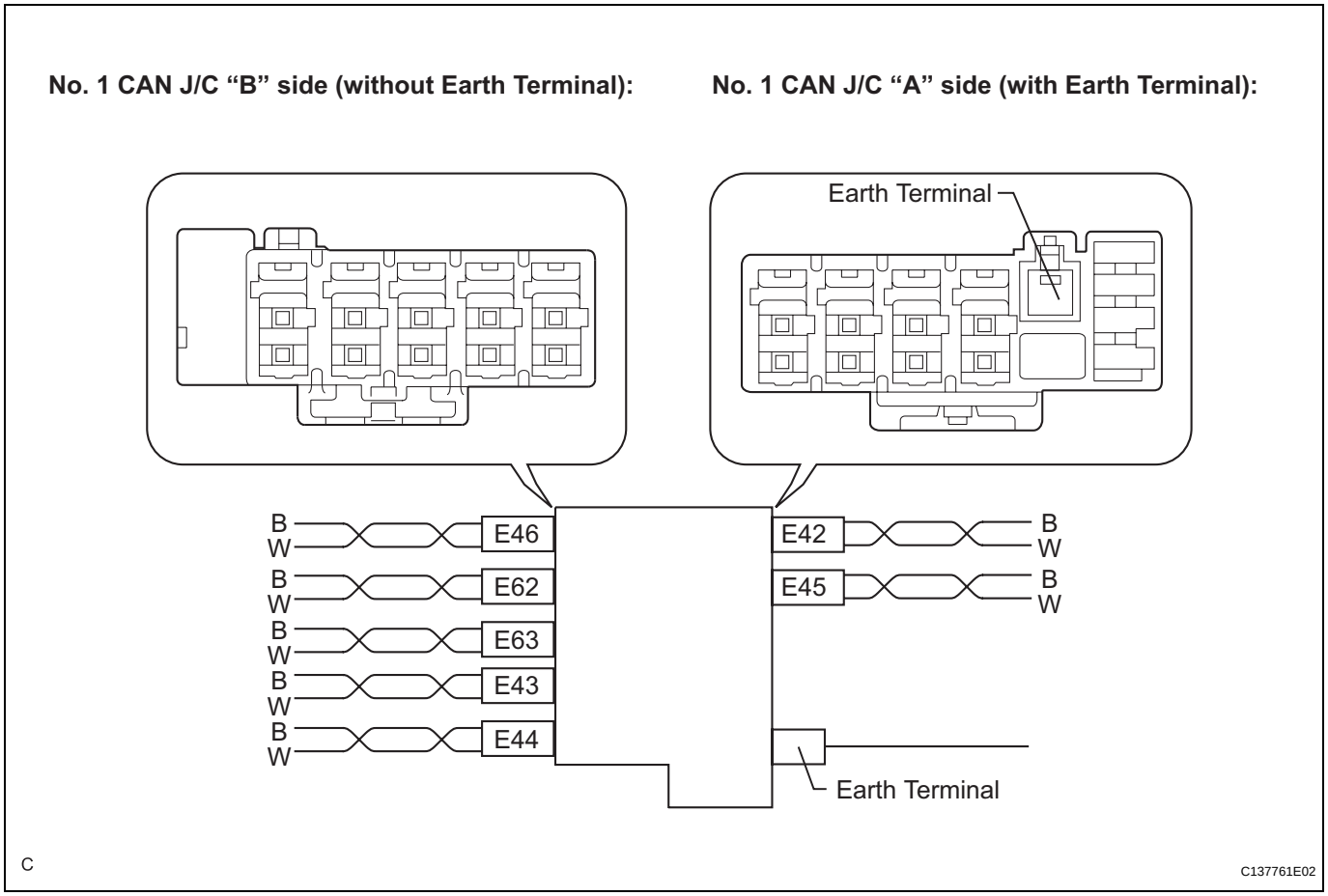

No. 1 CAN J/C connectors ("A" side, with earth terminal)	Connector Color	Wire Color (CAN-H)	Wire Color (CAN-L)
CAN Main Bus Wire (E42)	White	B	W
Airbag Sensor Assembly Center (E45)	Black	B	W

No. 1 CAN J/C connectors ("B" side, with earth terminal)	Connector Color	Wire Color (CAN-H)	Wire Color (CAN-L)
Yaw Rate Sensor* (E46)	Blue	B	W
DLC3 (E62)	Gray	B	W
Steering Angle Sensor* (E63)	Brown	B	W
Combination Meter (E43)	White	B	W
Main Body ECU (E44)	Black	B	W

*: with VSC

(b) No. 2 CAN J/C (FRONT OF THE VEHICLE)

No. 2 CAN J/C (Front of the Vehicle) Wire Harness View:

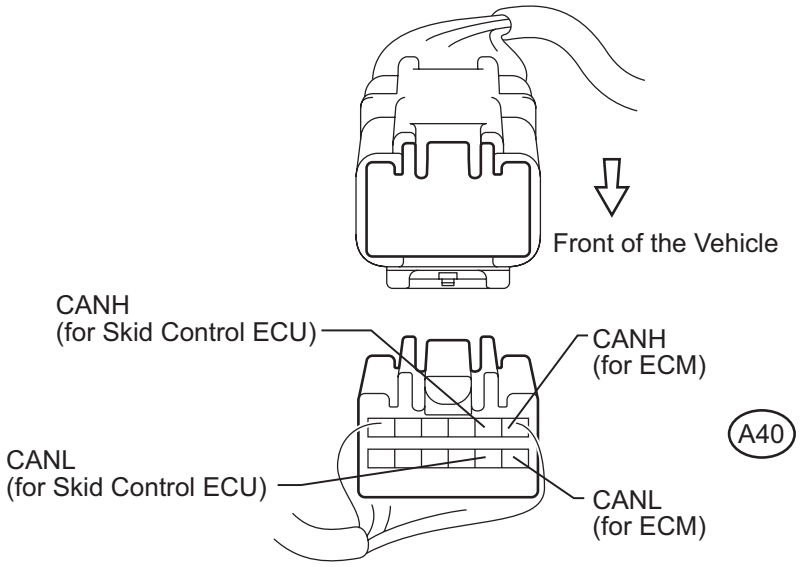

H

C137762E02

Terminals	Wiring Color	Connects to
A40-1 (CANH)	B	ECM (CANH)
A40-7 (CANL)	W	ECM (CANL)
A40-2 (CANH)	B	Skid Control ECU (CANH)
A40-8 (CANL)	W	Skid Control ECU (CANL)

(c) No. 2 CAN J/C (REAR OF THE VEHICLE)

No. 2 CAN J/C (Rear of the Vehicle) Wire Harness View:

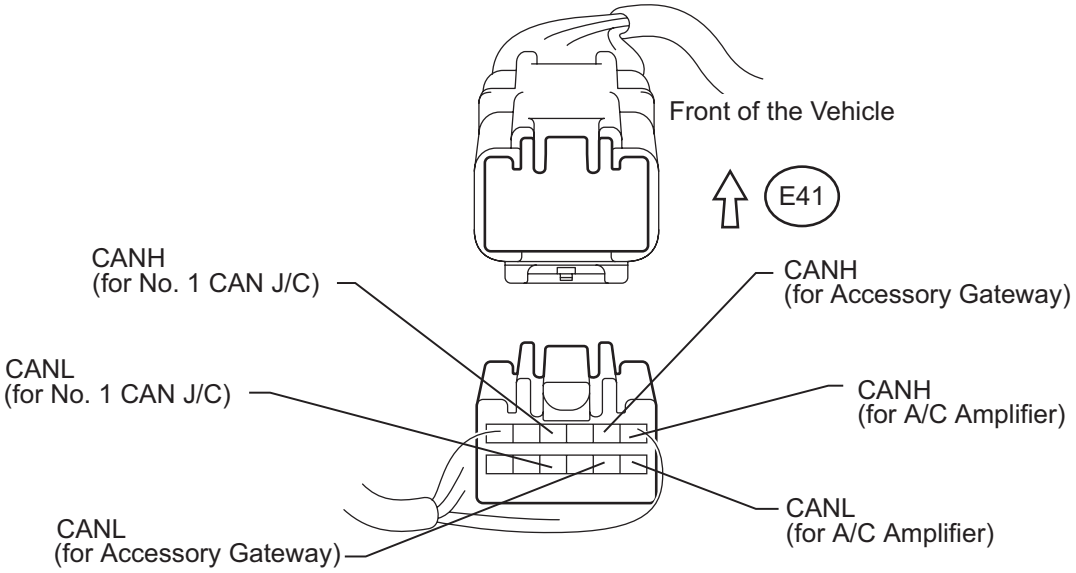

H

C137763E02

Terminals	Wiring Color	Connects to
E41-1 (CANH)	B	Accessory Gateway (CANH)

CA

Terminals	Wiring Color	Connects to
E41-7 (CANL)	W	Accessory Gateway (CANL)
E41-2 (CANH)	B	A/C Amplifier (CANH)
E41-8 (CANL)	W	A/C Amplifier (CANL)
E41-4 (CANH)	B	No. 1 CAN J/C (CANH)
E41-10 (CANL)	W	No. 1 CAN J/C (CANL)

(d) The connection diagram of the components which are connected to the CAN J/C

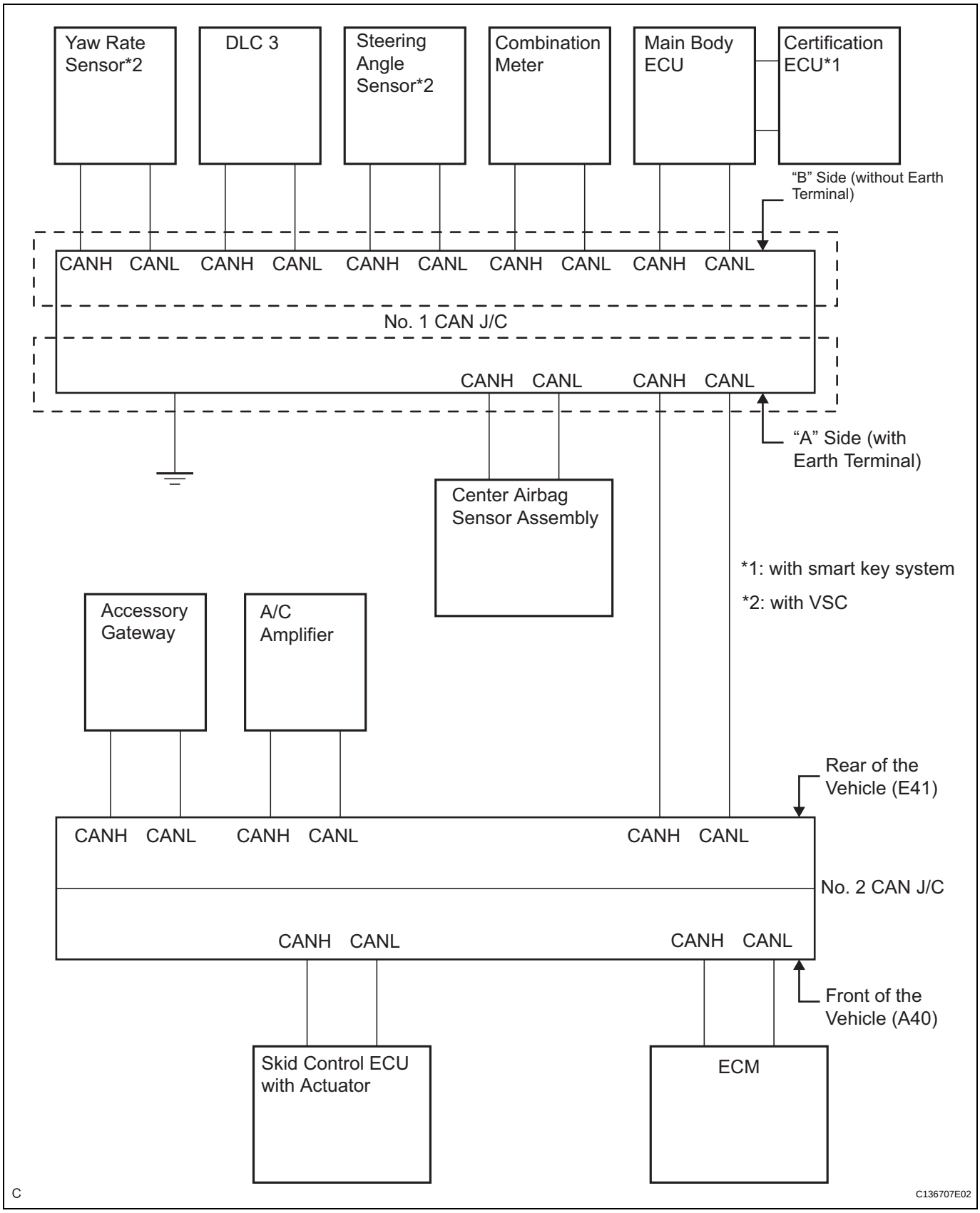

CA

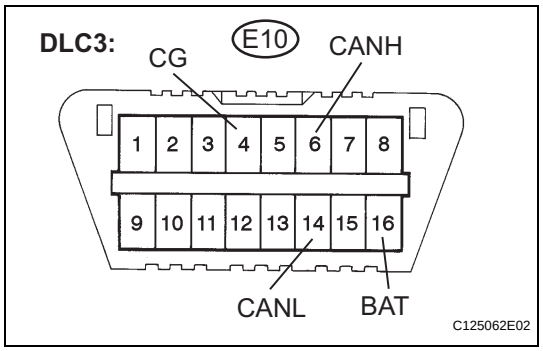

2. DLC3

(a) Measure the resistance according to the value(s) in the table below.

Standard resistance

Terminals	Wiring Color	Terminal Description	Condition	Specified Condition
E10-6 (CANH) - E10-14 (CANL)	B - W	HIGH-level CAN bus wire - LOW-level CAN bus wire	Ignition Switch off	54 to 69 Ω
E10-6 (CANH) - E10-4 (CG)	B - W-B	HIGH-level CAN bus wire - Ground	Ignition Switch off	200 Ω or higher
E10-14 (CANL) - E10-4 (CG)	W - W-B	LOW-level CAN bus wire - Ground	Ignition Switch off	200 Ω or higher
E10-6 (CANH) - E10-16 (BAT)	B - L	HIGH-level CAN bus wire - Battery positive	Ignition Switch off	1 MΩ or higher
E10-14 (CANL) - E10-16 (BAT)	W - L	LOW-level CAN bus wire - Battery positive	Ignition Switch off	1 MΩ or higher

CA

3. SKID CONTROL ECU (w/o VSC)

(a) Disconnect the A25 connector from the skid control ECU.

(b) Measure the resistance according to the value(s) in the table below.

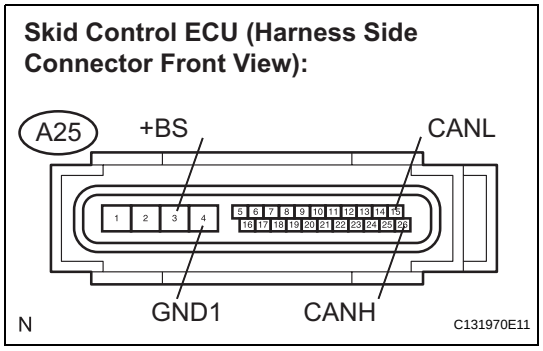

Standard resistance

Terminals	Wiring Color	Terminal Description	Condition	Specified Condition
A25-26 (CANH) - A25-15 (CANL)	B - W	HIGH-level CAN bus wire - LOW-level CAN bus wire	Ignition Switch off	54 to 69 Ω
A25-26 (CANH) - A25-4 (GND1)	B - W-B	HIGH-level CAN bus wire - Ground	Ignition Switch off	200 Ω or higher
A25-15 (CANL) - A25-4 (GND1)	W - W-B	LOW-level CAN bus wire - Ground	Ignition Switch off	200 Ω or higher
A25-26 (CANH) - A25-3 (+BS)	B - L	HIGH-level CAN bus wire - Battery positive	Ignition Switch off	6 kΩ or higher
A25-15 (CANL) - A25-3 (+BS)	W - L	LOW-level CAN bus wire - Battery positive	Ignition Switch off	6 kΩ or higher

Skid Control ECU Connector Front View:

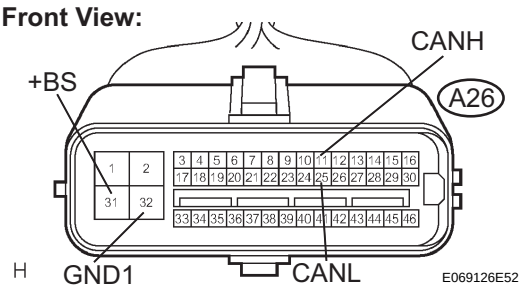

4. SKID CONTROL ECU WITH ACTUATOR (w/ VSC)

(a) TMC made

(1) Disconnect A26 connector from the skid control ECU.

(2) Measure the resistance according to the value(s) in the table below.

Standard resistance

Terminals	Wiring Color	Terminal Description	Condition	Specified Condition
A26-11 (CANH) - A26-25 (CANL)	B - W	HIGH-level CAN bus wire - LOW-level CAN bus wire	Ignition Switch off	54 to 69 Ω
A26-11 (CANH) - A26-32 (GND1)	B - W-B	HIGH-level CAN bus wire - Ground	Ignition Switch off	200 Ω or higher
A26-25 (CANL) - A26-32 (GND1)	W - W-B	LOW-level CAN bus wire - Ground	Ignition Switch off	200 Ω or higher
A26-11 (CANH) - A26-31 (+BS)	B - L	HIGH-level CAN bus wire - Battery positive	Ignition Switch off	6 kΩ or higher
A26-25 (CANL)- A26-31 (+BS)	W - L	LOW-level CAN bus wire - Battery positive	Ignition Switch off	6 kΩ or higher

CA

Skid Control ECU (Harness Side Connector Front View):

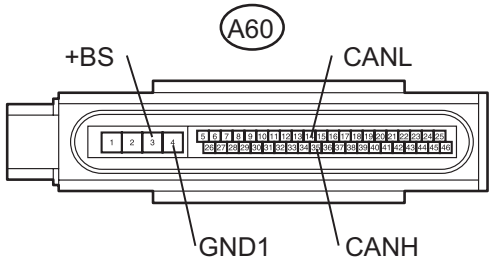

(b) TMMK made

(1) Disconnect the A60 connector from the skid control ECU.

(2) Measure the resistance according to the value(s) in the table below.

Standard resistance

Terminals	Wiring Color	Terminal Description	Condition	Specified Condition
A60-35 (CANH) - A60-14 (CANL)	B - W	HIGH-level CAN bus wire - LOW-level CAN bus wire	Ignition Switch off	54 to 69 Ω
A60-35 (CANH) - A60-4 (GND1)	B - W-B	HIGH-level CAN bus wire - Ground	Ignition Switch off	200 Ω or higher
A60-14 (CANL) - A60-4 (GND1)	W - W-B	LOW-level CAN bus wire - Ground	Ignition Switch off	200 Ω or higher
A60-35 (CANH) - A60-3 (+BS)	B - L	HIGH-level CAN bus wire - Battery positive	Ignition Switch off	6 kΩ or higher
A60-14 (CANL)- A60-3 (+BS)	W - L	LOW-level CAN bus wire - Battery positive	Ignition Switch off	6 kΩ or higher

Steering Angle Sensor Wire Harness View:

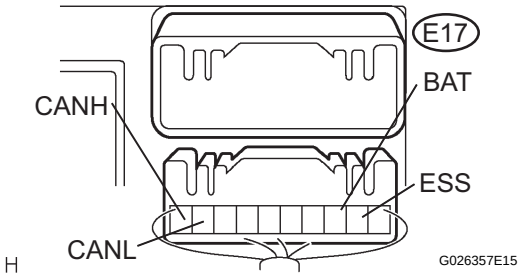

5. STEERING ANGLE SENSOR (W/ VSC)

(a) Disconnect the E17 connector from the steering angle sensor.

(b) Measure the resistance according to the value(s) in the table below.

Standard resistance

Terminals	Wiring Color	Terminal Description	Condition	Specified Condition
E17-10 (CANH) - E17-9 (CANL)	B - W	HIGH-level CAN bus wire - LOW-level CAN bus wire	Ignition Switch off	54 to 69 Ω
E17-10 (CANH) - E17-2 (ESS)	B - W-B	HIGH-level CAN bus wire - Ground	Ignition Switch off	200 Ω or higher
E17-9 (CANL) - E17-2 (ESS)	W - W-B	LOW-level CAN bus wire - Ground	Ignition Switch off	200 Ω or higher
E17-10 (CANH) - E17-3 (BAT)	B - W	HIGH-level CAN bus wire - Battery positive	Ignition Switch off	6 kΩ or higher
E17-9 (CANL) - E17-3 (BAT)	W - W	LOW-level CAN bus wire - Battery positive	Ignition Switch off	6 kΩ or higher

CA

Yaw Rate Sensor Connector Front View:

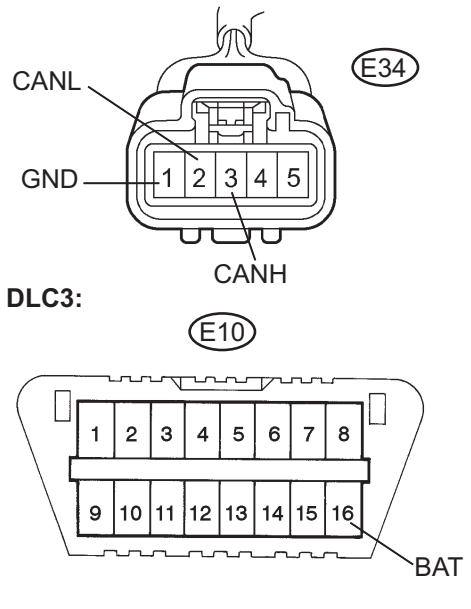

6. YAW RATE SENSOR (W/ VSC)

(a) TMC made

(1) Disconnect the E34 connector from the yaw rate sensor.

(2) Measure the resistance according to the value(s) in the table below.

Standard resistance

Terminals	Wiring Color	Terminal Description	Condition	Specified Condition
E34-3 (CANH) - E34-2 (CANL)	B - W	HIGH-level CAN bus wire - LOW-level CAN bus wire	Ignition Switch off	54 to 69 Ω
E34-3 (CANH) - E34-1 (GND)	B - W-B	HIGH-level CAN bus wire - Ground	Ignition Switch off	200 Ω or higher
E34-2 (CANL) - E34-1 (GND)	W - W-B	LOW-level CAN bus wire - Ground	Ignition Switch off	200 Ω or higher
E34-3 (CANH) - E10-16 (BAT)	B - O	HIGH-level CAN bus wire - Battery positive	Ignition Switch off	6 kΩ or higher

Terminals	Wiring Color	Terminal Description	Condition	Specified Condition
E34-2 (CANL) - E10-16 (BAT)	W - O	LOW-level CAN bus wire - Battery positive	Ignition Switch off	6 kΩ or higher

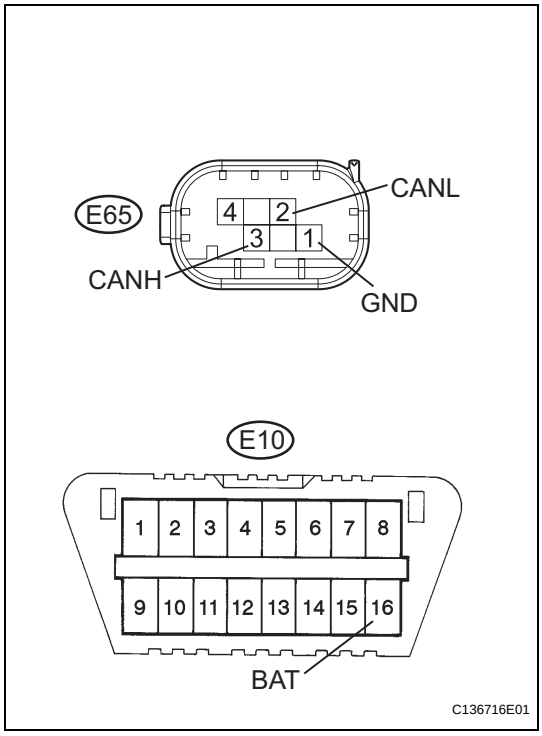

(b) TMMK made
(1) Disconnect the E34 connector from the yaw rate sensor.
(2) Measure the resistance according to the value(s) in the table below.

Standard resistance

Terminals	Wiring Color	Terminal Description	Condition	Specified Condition
E65-3 (CANH) - E65-2 (CANL)	B - W	HIGH-level CAN bus wire - LOW-level CAN bus wire	Ignition Switch off	54 to 69 Ω
E65-3 (CANH) - E65-1 (GND)	B - W-B	HIGH-level CAN bus wire - Ground	Ignition Switch off	200 Ω or higher
E65-2 (CANL) - E65-1 (GND)	W - W-B	LOW-level CAN bus wire - Ground	Ignition Switch off	200 Ω or higher
E65-3 (CANH) - E10-16 (BAT)	B - O	HIGH-level CAN bus wire - Battery positive	Ignition Switch off	6 kΩ or higher
E65-2 (CANL) - E10-16 (BAT)	W - O	LOW-level CAN bus wire - Battery positive	Ignition Switch off	6 kΩ or higher

7. CENTER AIRBAG SENSOR ASSEMBLY

(a) Disconnect the E30 connector from the center airbag sensor assembly.

Center Airbag Sensor Wire Harness View :

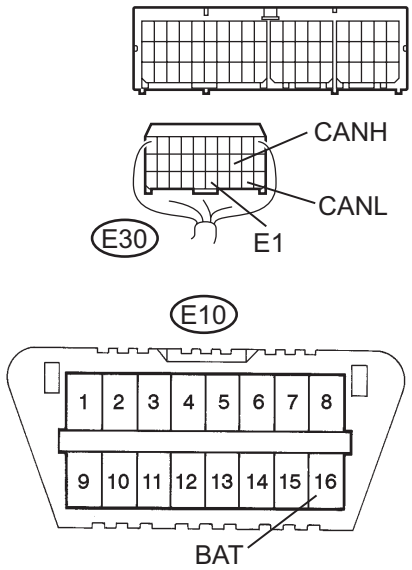

(b) Measure the resistance according to the value(s) in the table below.

Standard resistance

Terminals	Wiring Color	Terminal Description	Condition	Specified Condition
E30-13 (CANH) - E30-22 (CANL)	B - W	HIGH-level CAN bus wire - LOW-level CAN bus wire	Ignition Switch off	54 to 69 Ω
E30-13 (CANH) - E30-25 (E1)	B - W-B	HIGH-level CAN bus wire - Ground	Ignition Switch off	200 Ω or higher
E30-22 (CANL) - E30-25 (E1)	W - W-B	LOW-level CAN bus wire - Ground	Ignition Switch off	200 Ω or higher
E30-13 (CANH) - E10-16 (BAT)	B - L	HIGH-level CAN bus wire - Battery positive	Ignition Switch off	6 kΩ or higher
E30-22 (CANL) - E10-16 (BAT)	W - L	LOW-level CAN bus wire - Battery positive	Ignition Switch off	6 kΩ or higher

8. ECM

(a) 2AZ-FE

ECM:

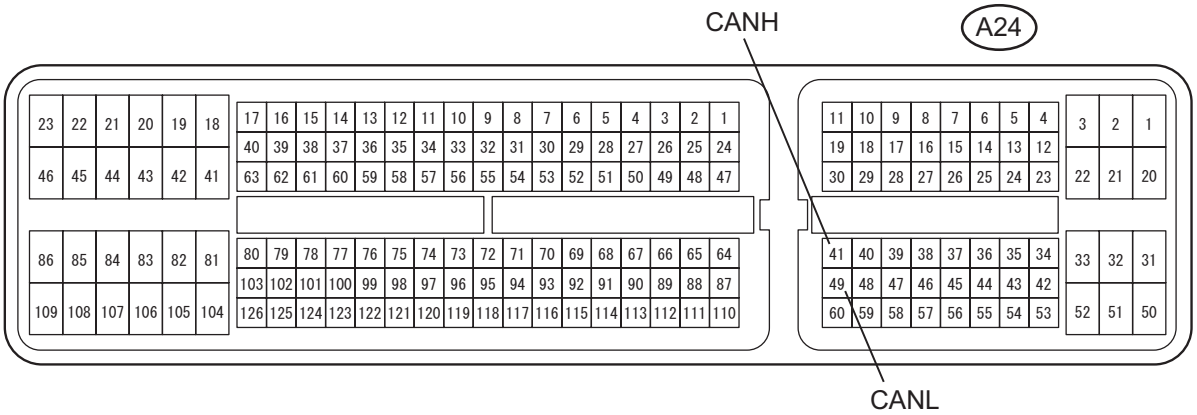

(1) Disconnect the A24 connector from the ECM.

CA

(2) Measure the resistance according to the value(s) in the table below.

Standard resistance

Terminals	Condition	Specified Condition
A24-41 (CANH) - A29-49 (CANL)	Ignition Switch off	108 to 132 Ω

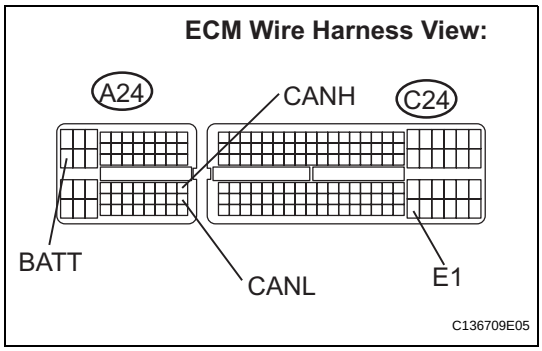

(3) Measure the resistance according to the value(s) in the table below.

Standard resistance

Terminals	Wiring Color	Terminal Description	Condition	Specified Condition
A24-41 (CANH) - A24-49 (CANL)	B - W	HIGH-level CAN bus wire - LOW-level CAN bus wire	Ignition Switch off	108 to 132 Ω
A24-41 (CANH) - C24-104 (E1)	B - W-B	HIGH-level CAN bus wire - Ground	Ignition Switch off	200 Ω or higher
A24-49 (CANL) - C24-104 (E1)	B - W-B	LOW-level CAN bus wire - Ground	Ignition Switch off	200 Ω or higher
A24-41 (CANH) - A24-20 (BATT)	B - Y	HIGH-level CAN bus wire - Battery positive	Ignition Switch off	6 kΩ or higher
A24-49 (CANL) - A24-20 (BATT)	W - Y	LOW-level CAN bus wire - Battery positive	Ignition Switch off	6 kΩ or higher

CA

(b) 2GR-FE

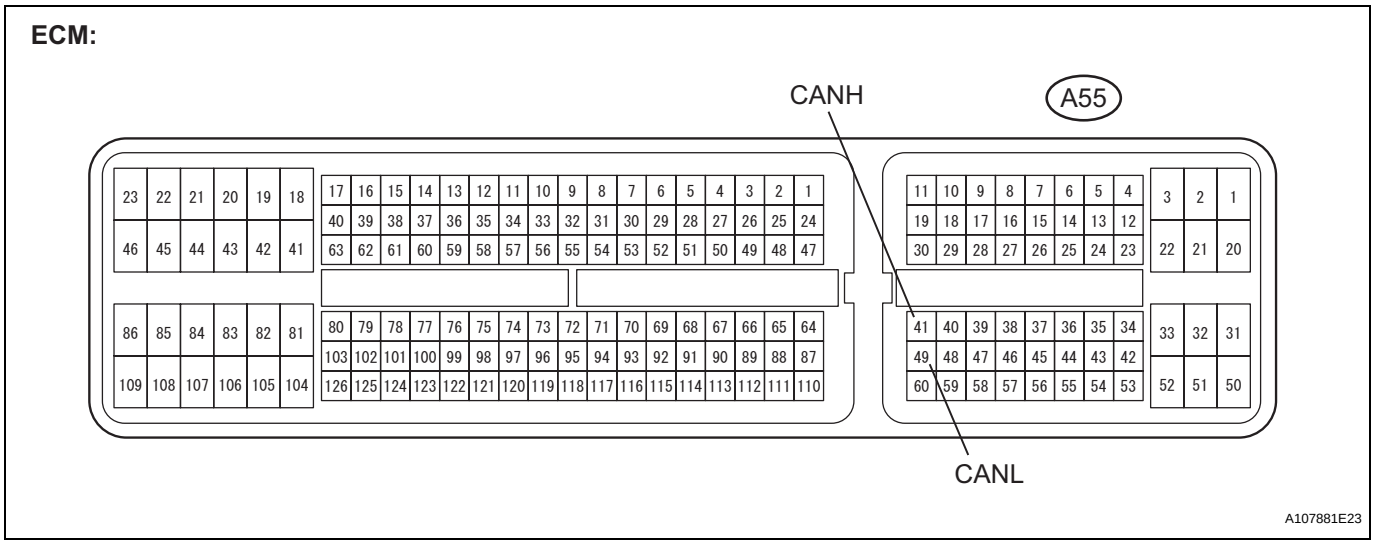

(1) Disconnect the A55 connector from the ECM.
(2) Measure the resistance according to the value(s) in the table below.

Standard resistance

Terminals	Condition	Specified Condition
A55-41 (CANH) - A55-49 (CANL)	Ignition Switch off	108 to 132 Ω

ECM Wire Harness View:

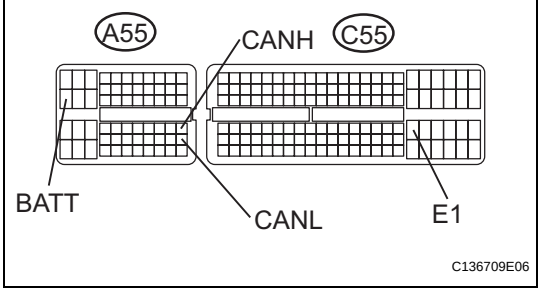

(3) Measure the resistance according to the value(s) in the table below.

Standard resistance

Terminals	Wiring Color	Terminal Description	Condition	Specified Condition
A55-41 (CANH) - A55-49 (CANL)	B - W	HIGH-level CAN bus wire - LOW-level CAN bus wire	Ignition Switch off	108 to 132 Ω
A55-41 (CANH) - C55-81 (EC)	B - W-B	HIGH-level CAN bus wire - Ground	Ignition Switch off	200 Ω or higher
A55-49 (CANL) - C55-81 (EC)	B - W-B	LOW-level CAN bus wire - Ground	Ignition Switch off	200 Ω or higher
A55-41 (CANH) - A55-20 (BATT)	B - Y	HIGH-level CAN bus wire - Battery positive	Ignition Switch off	6 kΩ or higher
A55-49 (CANL) - A55-20 (BATT)	W - Y	LOW-level CAN bus wire - Battery positive	Ignition Switch off	6 kΩ or higher

CA

Air Conditioning Amplifier (Wire Harness Side):

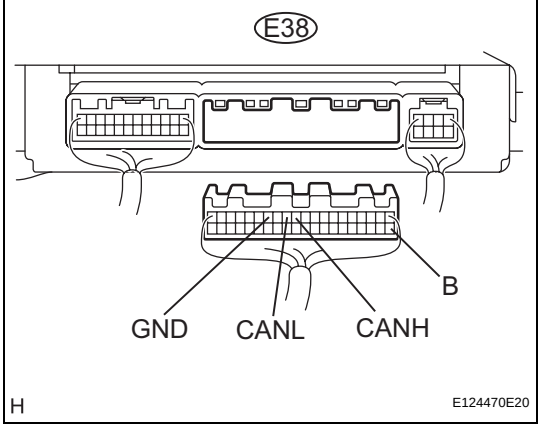

9. AIR CONDITIONING AMPLIFIER

(a) Check the harness side connector (E38) of the air conditioning amplifier.

(1) Disconnect the connector (E38) from the air conditioning amplifier.

(2) Measure the resistance according to the value(s) in the table below.

Standard resistance

Terminals	Wiring Color	Terminal Description	Condition	Specified Condition
E38-11 (CANH) - E38-12 (CANL)	B - W	HIGH-level CAN bus wire - LOW-level CAN bus wire	Ignition Switch off	54 to 69 Ω
E38-11 (CANH) - E38-14 (GND)	B - W-B	HIGH-level CAN bus wire - Ground	Ignition Switch off	200 Ω or higher
E38-12 (CANL) - E38-14 (GND)	W - W-B	LOW-level CAN bus wire - Ground	Ignition Switch off	200 Ω or higher
E38-11 (CANH) - E38-21 (B)	B - GR	HIGH-level CAN bus wire - Battery positive	Ignition Switch off	6 kΩ or higher
E38-12 (CANL) - E38-21 (B)	W - GR	LOW-level CAN bus wire - Battery positive	Ignition Switch off	6 kΩ or higher

10. COMBINATION METER ECU

(a) Disconnect the F1 connector from the combination meter.

Combination Meter (Component Side):

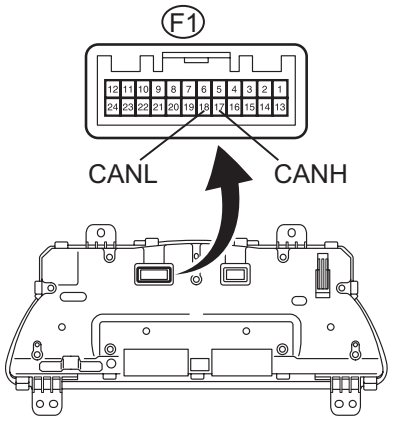

(b) Measure the resistance according to the value(s) in the table below.

Standard resistance

Terminals	Condition	Specified Condition
F1-17 (CANH) - F1-18 (CANL)	Ignition Switch off	108 to 132 Ω

CA

Combination Meter (Wire Harness Side):

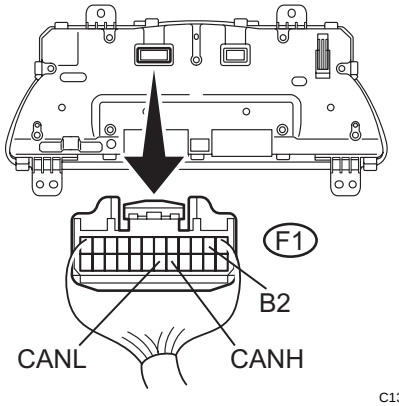

(c) Measure the resistance according to the value(s) in the table below.

Standard resistance

Terminals	Wiring Color	Terminal Description	Condition	Specified Condition
F1-17 (CANH) - F1-18 (CANL)	B - W	HIGH-level CAN bus wire - LOW-level CAN bus wire	Ignition Switch off	108 to 132 Ω
F1-17 (CANH) - F1-12 (E2)	B - W-B	HIGH-level CAN bus wire - Ground	Ignition Switch off	200 Ω or higher
F1-18 (CANL) - F1-12 (E2)	B - W-B	LOW-level CAN bus wire - Ground	Ignition Switch off	200 Ω or higher
F1-17 (CANH) - F1-2 (B2)	B - R	HIGH-level CAN bus wire - Battery positive	Ignition Switch off	6 kΩ or higher
F1-18 (CANL) - F1-2 (B2)	B - R	LOW-level CAN bus wire - Battery positive	Ignition Switch off	6 kΩ or higher

11. CERTIFICATION ECU (W/ SMART KEY SYSTEM)

(a) Disconnect the E58 connector from the certification ECU.

Certification ECU (Wire Harness Side):

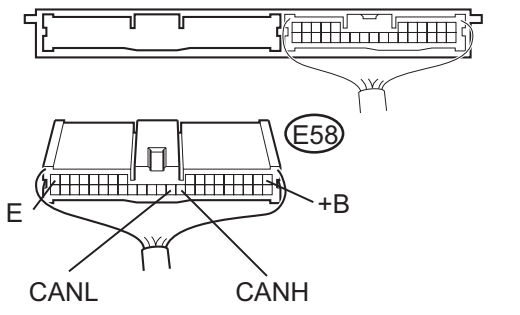

(b) Measure the resistance according to the value(s) in the table below.

Standard resistance

Terminals	Wiring Color	Terminal Description	Condition	Specified Condition
E58-27 (CANH) - E58-28 (CANL)	B - W	HIGH-level CAN bus wire - LOW-level CAN bus wire	Ignition Switch off	108 to 132 Ω
E58-27 (CANH) - E58-17 (E)	B - W-B	HIGH-level CAN bus wire - Ground	Ignition Switch off	200 Ω or higher
E58-28 (CANL) - E58-17 (E)	B - W-B	LOW-level CAN bus wire - Ground	Ignition Switch off	200 Ω or higher
E58-27 (CANH) - E58-1 (+B)	B - W	HIGH-level CAN bus wire - Battery positive	Ignition Switch off	6 kΩ or higher
E58-28 (CANL) - E58-1 (+B)	W - W	LOW-level CAN bus wire - Battery positive	Ignition Switch off	6 kΩ or higher

CA

12. MAIN BODY ECU (INSTRUMENT PANEL J/B)

(a) Disconnect the E8 connector from the main body ECU.

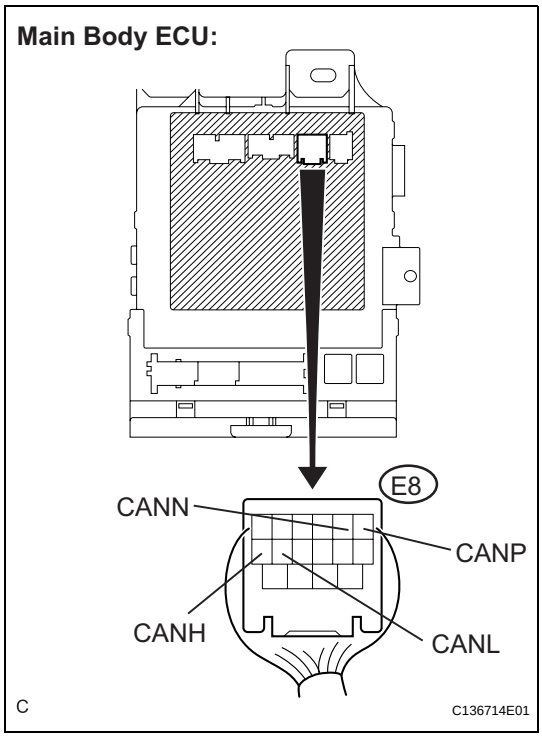

(b) Measure the resistance according to the value(s) in the table below.

Standard resistance

Terminals	Wiring Color	Terminal Description	Condition	Specified Condition
E8-5 (CANH) - E8-6 (CANL)	B - W	HIGH-level CAN bus wire - LOW-level CAN bus wire	Ignition Switch off	54 to 69 Ω
E8-16 (CANP) - E8-15 (CANN)	W - L	HIGH-level CAN bus wire - LOW-level CAN bus wire	Ignition Switch off	108 to 132 Ω

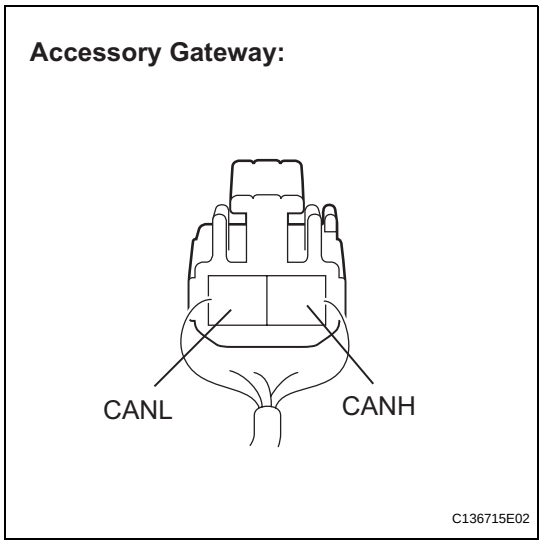

13. ACCESSORY GATEWAY

(a) Measure the resistance according to the value(s) in the table below.

Standard resistance

Terminals	Terminal Description	Condition	Specified Condition
E61-6 (CANH) - E61-14 (CANL)	HIGH-level CAN bus wire - LOW-level CAN bus wire	Ignition Switch off	54 to 69 Ω

DIAGNOSIS SYSTEM

1. BUS CHECK

(a) Select "BUS CHECK" from the "OBD/MOBD MENU" screen.
HINT:
The ECUs and sensors that are properly connected to the CAN communication system can be displayed using the intelligent tester via the CAN VIM.

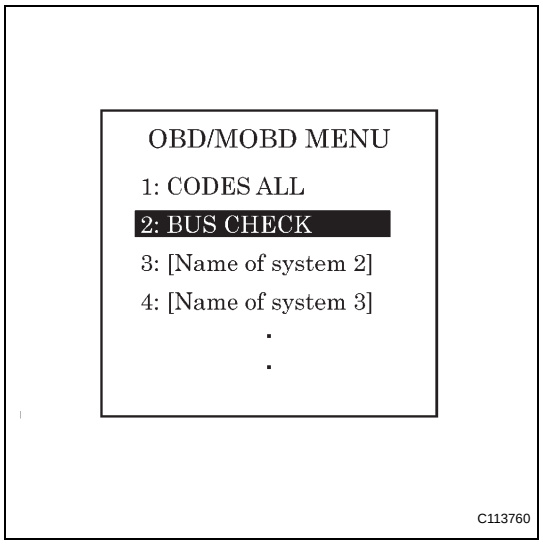

(b) Press "ENTER" on the intelligent tester.

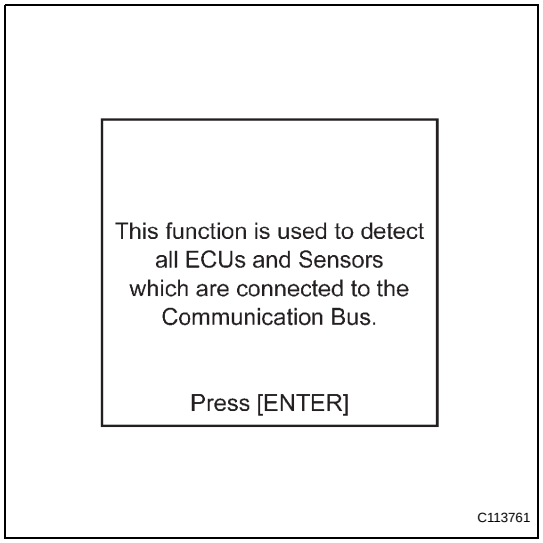

(c) The screen displays the ECUs and sensors that are properly connected to the CAN communication system.
HINT:
Properly connected ECUs or sensors that are not displayed on the screen indicate that a communication stop is occuring in the system, sensor, or ECU which is not displayed.

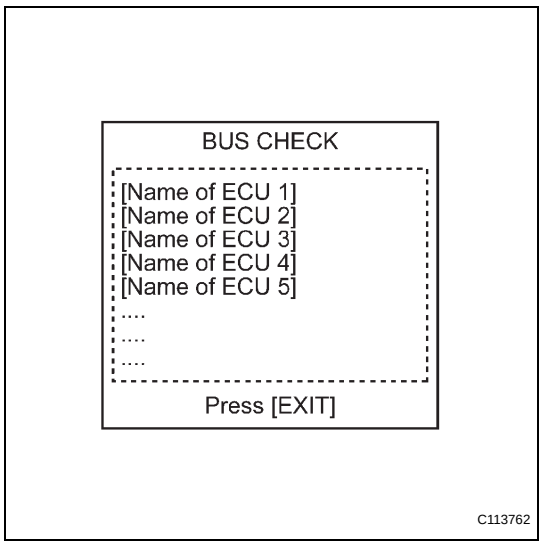

2. CHECK FOR INSTALLED SYSTEMS (ECUS AND SENSORS) THAT USE CAN COMMUNICATION

(a) Systems (ECUs, sensors) that use CAN communication vary depending on the vehicle's optional equipment. Check which systems (ECUs, sensors) are installed on the vehicle.

ECU/Sensor name	Check method
ABS/VSC/TRC	Installed on all vehicles
STEERING SENSOR	With VSC system
YAW / DECELERAT	With VSC system
ENGINE	Installed on all vehicles

CA

ECU/Sensor name	Check method
ECT	With automatic transaxle
SRS AIRBAG	Installed on all vehicles
A/C	Installed on all vehicles
METER	Installed on all vehicles
MAIN BODY	Installed on all vehicles
ACCESSORY G/W	With dealer option
SMART ACCESS/KEY	With smart key system

3. DTC TABLE BY ECU

HINT:

- For the CAN communication system, CAN communication system DTCs stored in certain ECUs can be displayed using the intelligent tester.
- If CAN communication system DTCs are output, trouble cannot be determined only by the DTCs. Perform troubleshooting according to "HOW TO PROCEED WITH TROUBLESHOOTING" (See page CA-8).

(a) ECM (2AZ-FE)

DTC No.	Detection Item
U0101*	High speed CAN Communication Bus

HINT:

- DTC communication is via the CAN communication system.
- *: The ECM is malfunctioning if only U0101 is output. Replace the ECM.

(b) ECM (2GR-FE)

DTC No.	Detection Item
U0101*	High speed CAN Communication Bus

HINT:

- DTC communication is via the CAN communication system.
- *: The ECM is malfunctioning if only U0101 is output. Refer to SFI system (See page ES-389).

(c) ECT (2AZ-FE)

DTC No.	Detection Item
U0100*	High speed CAN Communication Bus

HINT:

- DTC communication is via the CAN communication system.
- *: The ECM is malfunctioning if only U0100 is output. Replace the ECM.

(d) ECT (2GR-FE)

DTC No.	Detection Item
U0100*	High speed CAN Communication Bus

HINT:

- DTC communication is via the CAN communication system.

- *: The ECM is malfunctioning if only U0100 is output. Refer to Automatic Transaxle system (See page AX-151).

(e) SKID CONTROL ECU (with VSC)

DTC No.	Detection Item
U0073	Control Module Communication Bus Off
U0100	Lost Communication With ECM/PCM "A"
U0123	Lost Communication With Yaw Rate Sensor Module
U0124*	Lost Communication With Lateral Acceleration Sensor Module
U0126	Lost Communication With Steering Angle Sensor Module

HINT:
- DTC communication is via the CAN communication system.
- *: TMC made only

(f) SKID CONTROL ECU (without VSC)

DTC No.	Detection Item
U0073	Control Module Communication Bus Off

HINT:
DTC communication is via the CAN communication system.

(g) COMBINATION METER ECU

DTC No.	Detection Item
U0100	Lost Communication With ECM/PCM "A"
U0129	Lost Communication with Brake System Control Mode

HINT:
DTC communication is via the CAN communication system.

(h) AIR CONDITIONER AMPLIFIER

DTC No.	Detection Item
B1499	Multiplex Communication Circuit

HINT:
DTC communication is via the CAN communication system.

(i) MAIN BODY ECU (with smart key system)

DTC No.	Detection Item
B1207*	Certification ECU Communication Malfunction
B2326*	CAN MS Bus Line Communication Malfunction

HINT:
- DTC communication is via the CAN communication system.
- *: The main body ECU is malfunctioning if B1207 and/or B2326 are output alone. Refer to DTC chart (See page AX-46).

(j) MAIN BODY ECU (without smart key system)
HINT:
Although the center airbag sensor is connected to the CAN communication system, CAN communication DTCs are not output.

(k) CENTER AIRBAG SENSOR
HINT:
Although the center airbag sensor is connected to the CAN communication system, CAN communication DTCs are not output.

(l) CERTIFICATION ECU
HINT:
Although the Main Body ECU is connected to the CAN communication system, CAN communication DTCs are not output.

4. DTC COMBINATION TABLE

(a) with VSC SYSTEM

DTC		Trouble Mode			
Output from	**Output DTC**	**ECM Communication Stop Mode**	**Skid Control ECU Communication Stop Mode**	**Steering Angle Sensor Communication Stop Mode**	**Yaw Rate Sensor Communication Stop Mode**
Skid Control ECU	U0073	X	X	X	X
	U0100	▲ During driving	▲ During driving	X	X
	U0123	X	○	X	○
	U0124*	X	○	X	○
	U0126	X	○	○	X
Combination Meter ECU	U0100	○	X	X	X
	U0129	X	○	X	X
Air Conditioner Amplifier ECU	B1499	X	X	X	X
No DTC		X	X	X	X

*: TMC made only.
HINT:
- ○: Set
- X: Not set or may be set according to the malfunctioning part when one side of the CAN bus wire opens
- ▲: Set under the condition shown in the table above

DTC		Trouble Mode			
Output from	**Output DTC**	**Air Conditioner Amplifier ECU Communication Stop Mode**	**Center Airbag Sensor Communication Stop Mode**	**Main Body ECU Communication Stop Mode**	**Combination Meter ECU Communication Stop Mode**
Skid Control ECU	U0073	X	X	X	X
	U0100	X	X	X	X
	U0123	X	X	X	X
	U0124*	X	X	X	X
	U0126	X	X	X	X
Combination Meter ECU	U0100	X	X	X	X
	U0129	X	X	X	X
Air Conditioner Amplifier ECU	B1499	X	X	▲	▲
No DTC		○	○	X	X

*: TMC made only.
HINT:
- ○: Set

- X: Not set or may be set according to the malfunctioning part when one side of the CAN bus wire opens
- ▲: Set under the condition shown in the table above

(b) without VSC SYSTEM

DTC		Trouble Mode					
Output from	**Output DTC**	**ECM Communication Stop Mode**	**Skid Control ECU Communication Stop Mode**	**Combination Meter ECU Communication Stop Mode**	**Air Conditioner Amplifier ECU Communication Stop Mode**	**Center Airbag Sensor Communication Stop Mode**	**Main Body ECU Communication Stop Mode**
Skid Control ECU	U0073	X	X	X	X	X	X
Combination Meter ECU	U0100	○	X	X	X	X	X
	U0129	X	○	X	X	X	X
Air Conditioner Amplifier ECU	B1499	X	X	▲	X	X	▲
No DTC		X	X	X	○	○	X

HINT:
- ○: Set
- X: Not set or may be set according to the malfunctioning part when one side of the CAN bus wire becomes open.

(c) Perform troubleshooting depending on the combination of DTCs output.

HINT:
- ECM Communication Stop Mode (See Page CA-54)
- Skid Control ECU Communication Stop Mode (See page CA-42)
- Steering Angle Sensor Communication Stop Mode (See page CA-49)
- Yaw Rate Sensor Communication Stop Mode (See page CA-51)
- Combination Meter ECU Communication Stop Mode (See page CA-61)
- Center Airbag Sensor Communication Stop Mode (See page CA-63)
- Air Conditioner Amplifier ECU Communication Stop Mode (See page CA-46)
- Main Body ECU Communication Stop Mode (See page CA-57)

FAIL-SAFE CHART

1. FAIL-SAFE FUNCTION

(a) When communication fails in any of the CAN bus wire (communication lines) due to a short circuit or other causes, a fail-safe functions, will operate. The fail-safe function that is specified for each system operates to prevent those systems from malfunctioning.

(b) The following chart shows the relationships between components and system functions and effects of communication failure on these functions. (For further details, see the pages for each system.)

Function	ECM	Skid Control ECU (Without VSC)	Skid Control ECU (With VSC)	Steering Sensor	Yaw Rate Sensor	Condition when communication impossible	DTC detection (Driver detectable)
VSC control (Controls driving force while VSC in operation)	○	-	●	○	○	Control inoperative (gradually stops controlling during VSC control)	Detectable (Light comes on)
TRC control (Controls driving force and engine power when wheel slip detected during acceleration)	○	-	●	-	-	Control inoperative (gradually stops controlling during TRC control)	Detectable (Light comes on)
ABS control (Controls driving force while ABS in operation)	○	●	●	-	○ *1	Control is inoperative (gradually stops controlling during ABS control)	Detectable (Light comes on)
Security function	-	-	-	-	-	Theft deterrent system cannot be set	Detectable (Indicator light does not comes on)
Air conditioning control	○	-	-	-	-	Air conditioning function stops	None (Air conditioning inoperative)
Meter Display (Displays operation condition and DTCs)	○	○	○ *2	-	-	Light does not come on, illuminates abnormally, or blinks abnormally	Detectable (Abnormal display)
Buzzer control	○	○	○ *2	-	-	Buzzer function stops	Detectable (Buzzer does not sound)
Illumination control	○	-	-	-	-	Light illumination rheostat inoperative	None (Rheostat inoperative)
Smart entry / Power door lock control*3	-	-	-	-	-	Unlock permitted	None (Wireless door lock operation)

HINT:
- ●: Control master
- ○: System related
- *1: TMC made

CA

- *2: TMMK made
- *3: with smart key system

Function	Center Airbag Sensor Assembly	Air Conditioning Amplifier	Combination Meter ECU	Main Body ECU	Certification ECU*3	Condition when communication on impossible	DTC detection (Driver detectable)
VSC control (Controls driving force while VSC in operation)	-	-	-	-	-	Control inoperative (gradually stops controlling during VSC control)	Detectable (Light comes on)
TRC control (Controls driving force and engine power when wheel slip detected during acceleration)	-	-	-	-	-	Control inoperative (gradually stops controlling during TRC control)	Detectable (Light comes on)
ABS control (Controls driving force while ABS in operation)	-	-	-	-	-	Control is inoperative (gradually stops controlling during ABS control)	Detectable (Light comes on)
Security function	-	-	-	○	●	Theft deterrent system cannot beset	Detectable (Indicator light does not comes on)
Air conditioning control	-	●	○	○	-	Air conditioning function stops	None (Air conditioning inoperative)
Meter Display (Displays operation condition and DTCs)	○	-	●	○	○	Light does not come on, illuminates abnormally, or blinks abnormally	Detectable (Abnormal display)
Buzzer control	○	-	●	-	-	Buzzer function stops	Detectable (Buzzer does not sound)
Illumination control	-	-	○	●	-	Light illumination rheostat inoperative	None (Rheostat inoperative)
Smart entry / Power door lock control*3	-	-	○	○	●	Unlock permitted	None (Wireless door lock operation)

HINT:
- ●: Control master
- ○: System related
- *3: with smart key system

CA

DIAGNOSTIC TROUBLE CODE CHART

CAN COMMUNICATION SYSTEM

DTC No.	Detection Item	Trouble Area	See page
B1207	Certification ECU Communication Malfunction	1. CAN MS bus wire or connector 2.Certification ECU power source circuit 3. Certification ECU 4. Main Body ECU	CA-32
B2326	CAN MS Bus Line Communication Malfunction	1. CAN MS bus wire or connector 2.Certification ECU power source circuit 3. Certification ECU 4. Main Body ECU	CA-32

DTC	B1207	Certification ECU Communication Malfunction

DTC	B2326	CAN MS Bus Line Communication Malfunction

DESCRIPTION

The Main Body ECU and Certification ECU perform 2-way communication with each other via the Controller Area Network (CAN). If the Certification ECU cannot communicate with the Main Body ECU, the Main Body ECU will conclude that there is a malfunction in the CAN system, and set a DTC.

DTC No.	DTC Detection Condition	Trouble Area
B1207 B2326	No communication from certification ECU continues	• CAN MS bus wire or connector • Certification ECU power source circuit • Certification ECU • Main body ECU

WIRING DIAGRAM

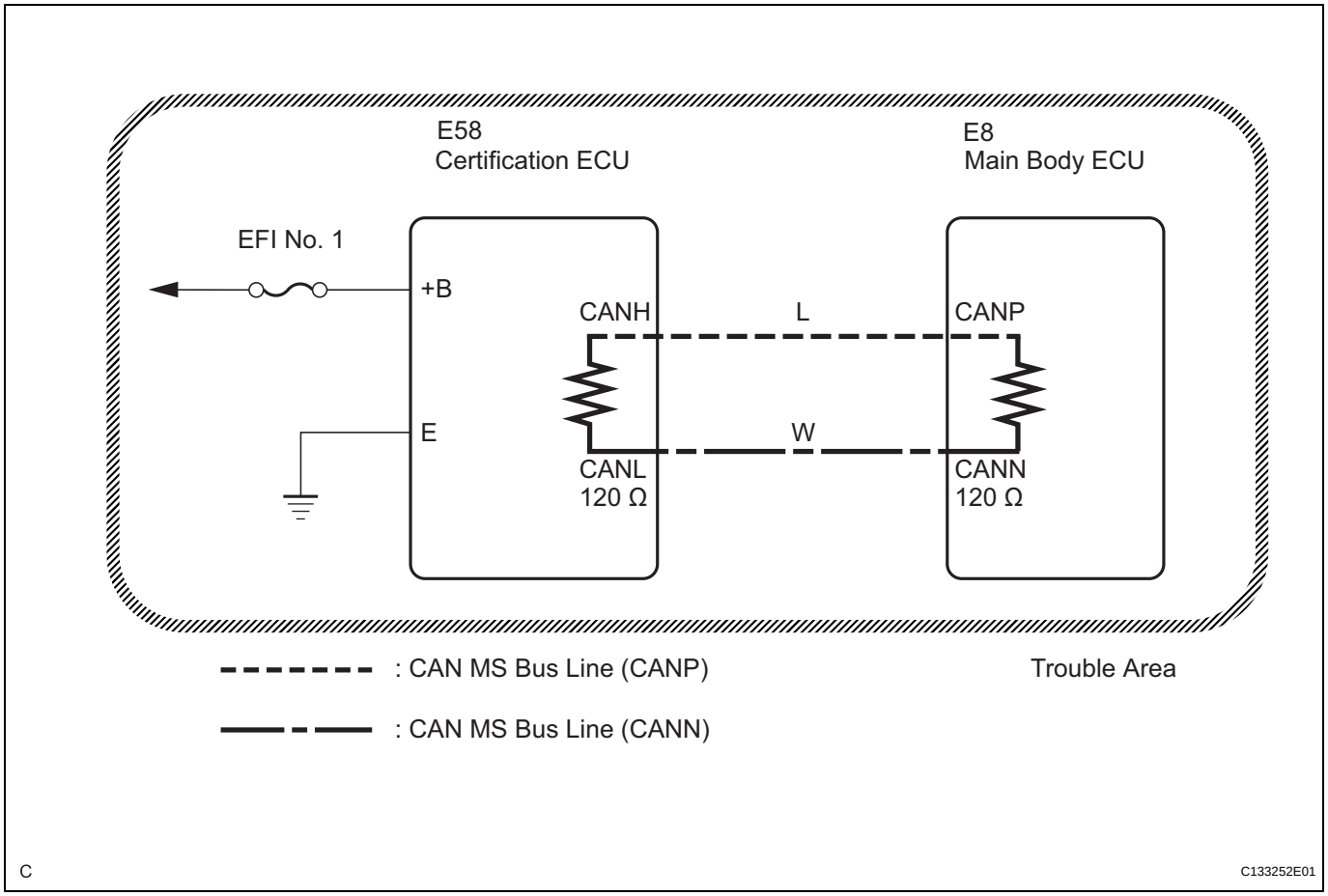

INSPECTION PROCEDURE

NOTICE:

- **Turn the ignition switch off before measuring the resistance of the CAN main wire and CAN branch wires.**
- **After the ignition switch is turned off, check that the key reminder warning system and light reminder warning system are not operating.**
- **Before measuring the resistance, leave the vehicle as is for at least 1 minute and do not operate the ignition switch, any other switches or the doors. If doors need to be opened in order to check connectors, open the doors and leave them open.**

CA

HINT:
Operating the ignition switch, any other switches or any triggers related ECU and sensor communication on the CAN, which would cause resistance reading variations.

1 CHECK CAN MS BUS WIRE

Certification ECU Connector:

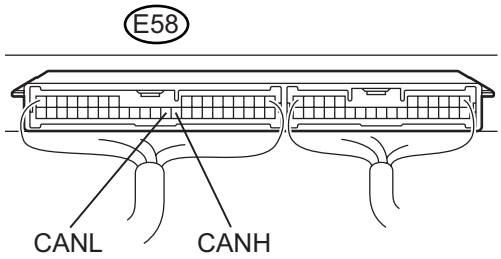

H B139430E05

(a) Turn the ignition switch off.
(b) Measure the resistance according to the value(s) in the table below.

Standard resistance

Tester Connection	Condition	Specified Condition	Proceed to
E58-27 (CANH) - E58-28 (CANL)	Ignition switch off	54 to 69 Ω	A
E58-27 (CANH) - E58-28 (CANL)	Ignition switch off	69 Ω or more	B
E58-27 (CANH) - E58-28 (CANL)	Ignition switch off	54 Ω or less	C

B → **Go to step 9**

C → **Go to step 11**

A

2 CHECK SHORT TO +B IN CAN MS BUS WIRE

Certification ECU Connector:

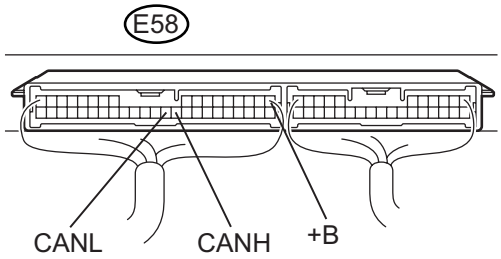

H B139430E06

(a) Turn the ignition switch off.
(b) Measure the resistance according to the value(s) in the table below.

Standard resistance

Tester Connection	Condition	Specified Condition
E58-27 (CANH) - E58-1 (+B)	Ignition switch off	6 kΩ or higher
E58-2 (CANL) - E58-1 (+B)	Ignition switch off	6 kΩ or higher

NG → **Go to step 5**

OK

CA

3 CHECK SHORT TO GND IN CAN MS BUS WIRE

Certification ECU Connector:

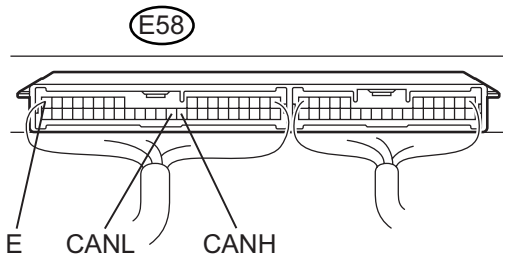

H B139430E07

(a) Turn the ignition switch off.
(b) Measure the resistance according to the value(s) in the table below.

Standard resistance

Tester Connection	Condition	Specified Condition
E58-27 (CANH) - E58-17 (E)	Ignition switch off	200 Ω or higher
E58-28 (CANL) - E58-17 (E)	Ignition switch off	200 Ω or higher

NG → **Go to step 7**

OK

4 CHECK CERTIFICATION ECU (POWER SOURCE CIRCUIT)

Certification ECU Connector

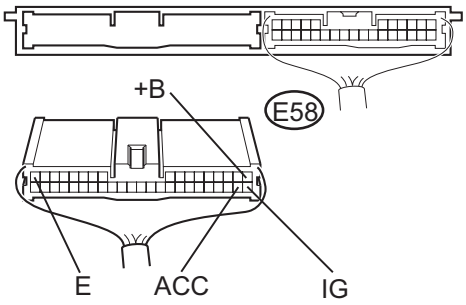

C C136713E06

(a) Turn the ignition switch off.
(b) Disconnect the E58 certification ECU connector.
(c) Measure the resistance according to the value(s) in the table below.

Standard resistance

Tester Connection	Condition	Specified Condition
E58-17 (E) - Body ground	Always	Below 1 Ω

(d) Measure the voltage according to the value(s) in the table below.

Standard voltage

Tester Connection	Condition	Specified Condition
E58-1 (B) - Body ground	Always	10 to 14 V
E58-18 (IG) - Body ground	Ignition switch on (IG)	10 to 14 V
E58-19 (ACC) - Body ground	Ignition switch on (ACC)	10 to 14 V

OK → **REPLACE CERTIFICATION ECU**

NG

REPAIR OR REPLACE HARNESS OR CONNECTOR (FUSES - ECU, ECU - BODY GROUND)

CA

5 CHECK SHORT TO +B IN CAN MS BUS WIRE (CERTIFICATION ECU)

Certification ECU Connector (Wire Harness Side):

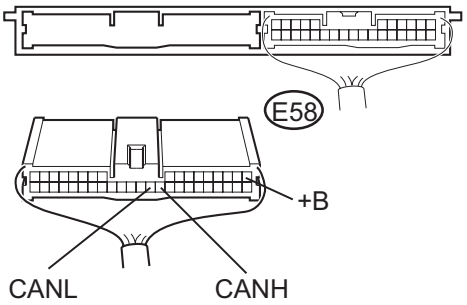

C C136713E02

(a) Turn the ignition switch off.
(b) Disconnect the E58 certification ECU connector.
(c) Measure the resistance according to the value(s) in the table below.

Standard resistance

Tester Connection	Condition	Specified Condition
E58-27 (CANH) - E58-1 (+B)	Ignition switch off	6 kΩ or higher
E58-28 (CANL) - E58-1 (+B)	Ignition switch off	6 kΩ or higher

OK → **REPLACE CERTIFICATION ECU**

CA

NG

6 CHECK SHORT TO +B IN CAN MS BUS WIRE (CERTIFICATION ECU - MAIN BODY ECU)

Main Body ECU:

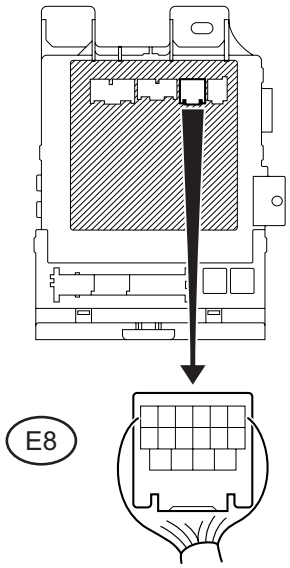

C C140857E01

(a) Turn the ignition switch off.
(b) Disconnect the E8 main body ECU connector.

Certification ECU Connector (Wire Harness Side):

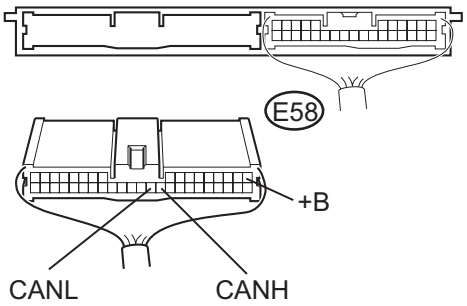

C C136713E02

(c) Measure the resistance according to the value(s) in the table below.
HINT:
The resistance must be measured after the E58 certification ECU connector is disconnected.
Standard resistance

Tester Connection	Condition	Specified Condition
E58-27 (CANH) - E58-1 (+B)	Ignition switch off	6 kΩ or higher
E58-28 (CANL) - E58-1 (+B)	Ignition switch off	6 kΩ or higher

OK → **REPLACE MAIN BODY ECU**

NG

REPAIR OR REPLACE CAN MS BUS MAIN WIRE OR CONNECTOR

CA

7 CHECK SHORT TO GND IN CAN MS BUS WIRE (CERTIFICATION ECU)

Certification ECU Connector (Wire Harness Side):

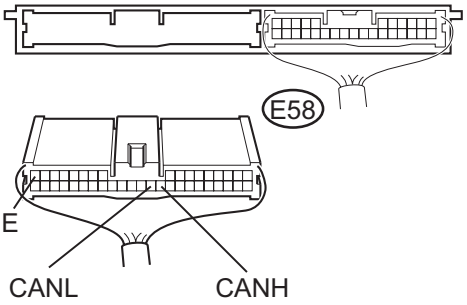

C C136713E03

(a) Turn the ignition switch off.
(b) Disconnect the E58 certification ECU connector.
(c) Measure the resistance according to the value(s) in the table below.
Standard resistance

Tester Connection	Condition	Specified Condition
E58-27 (CANH) - E58-17 (E)	Ignition switch off	6 kΩ or higher
E58-28 (CANL) - E58-17 (E)	Ignition switch off	6 kΩ or higher

OK → **REPLACE CERTIFICATION ECU**

NG

8	CHECK SHORT TO GND IN CAN MS BUS WIRE

Main Body ECU:

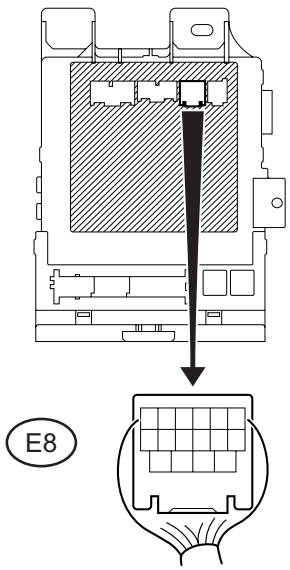

C C140857E01

(a) Turn the ignition switch off.
(b) Disconnect the E8 main body ECU connector.

Certification ECU Connector (Wire Harness Side):

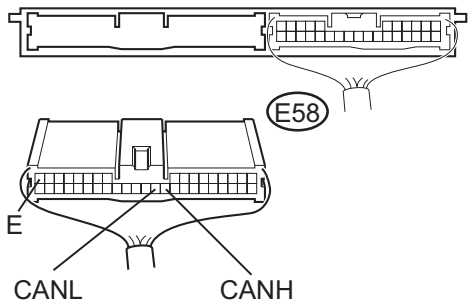

C C136713E03

(c) Measure the resistance according to the value(s) in the table below.
HINT:
The resistance must be measured after the E58 certification ECU connector is disconnected.

Standard resistance

Tester Connection	Condition	Specified Condition
E58-27 (CANH) - E58-17 (E)	Ignition switch off	6 kΩ or higher
E58-28 (CANL) - E58-17 (E)	Ignition switch off	6 kΩ or higher

OK → **REPLACE MAIN BODY ECU**

NG

REPAIR OR REPLACE CAN MS BUS MAIN WIRE OR CONNECTOR

9 CHECK CAN MS BUS MAIN WIRE OR CONNECTOR (CERTIFICATION ECU)

Certification ECU Connector (Wire Harness Side):

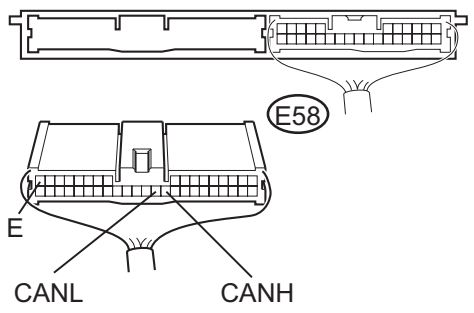

C C136713E03

(a) Turn the ignition switch off.
(b) Disconnect the E58 certification ECU connector.
(c) Measure the resistance according to the value(s) in the table below.

Standard resistance

Tester Connection	Condition	Specified Condition
E58-27 (CANH) - E58-28 (CANL)	Ignition switch off	108 to 132 Ω or higher

OK → **REPLACE CERTIFICATION ECU**

NG

CA

10	**CHECK CAN MS BUS MAIN WIRE OR CONNECTOR (CERTIFICATION ECU - MAIN BODY ECU)**

Certification ECU Connector (Wire Harness Side):

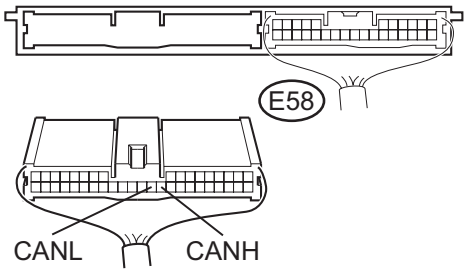

Main Body ECU Connector (Wire Harness Side):

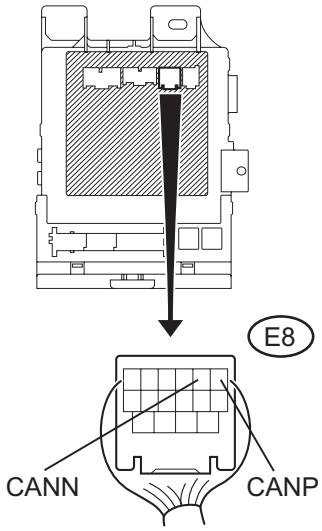

C
C133244E01

(a) Turn the ignition switch off.
(b) Disconnect the E8 main body ECU connector.
(c) Measure the resistance according to the value(s) in the table below.
HINT:
The resistance must be measured after the E58 certification ECU connector is disconnected.

Standard resistance

Tester Connection	Condition	Specified Condition
E58-27 (CANH) - E8-16 (CANP)	Always	Below 1 Ω
E58-28 (CANL) - E8-15 (CANN)	Always	Below 1 Ω

OK → **REPLACE MAIN BODY ECU**

CA

NG

REPAIR OR REPLACE CAN MS BUS MAIN WIRE OR CONNECTOR

11 CHECK SHORT IN CAN MS BUS WIRES (CERTIFICATION ECU)

Certification ECU Connector (Wire Harness Side):

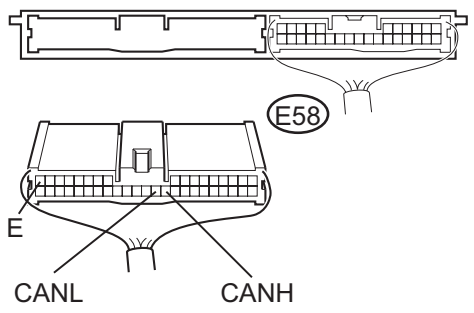

C C136713E03

(a) Turn the ignition switch off.
(b) Disconnect the E58 certification ECU connector.
(c) Measure the resistance according to the value(s) in the table below.

Standard resistance

Tester Connection	Condition	Specified Condition
E58-27 (CANH) - E58-28 (CANL)	Ignition switch off	108 to 132 Ω or higher

OK → **REPLACE CERTIFICATION ECU**

NG

CA

12 CHECK SHORT IN CAN MS BUS WIRES

Main Body ECU:

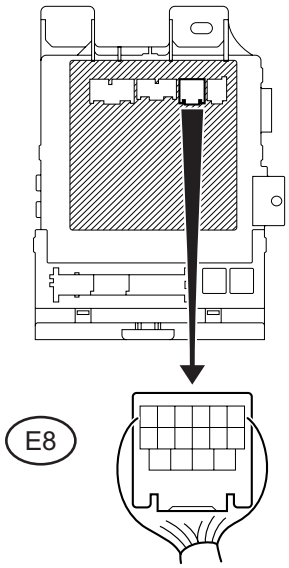

C C140857E01

(a) Turn the ignition switch off.
(b) Disconnect the E8 main body ECU connector.

Certification ECU Connector (Wire Harness Side):

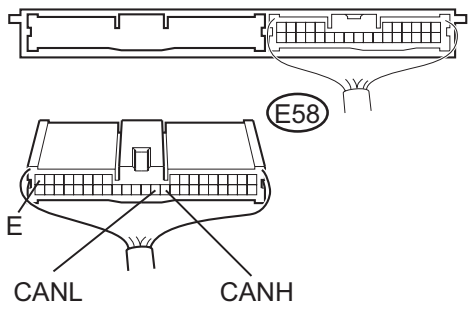

C C136713E03

(c) Measure the resistance according to the value(s) in the table below.
HINT:
The resistance must be measured after the E58 certification ECU connector is disconnected.
Standard resistance

Tester Connection	Condition	Specified Condition
E58-27 (CANH) - E58-28 (CANL)	Ignition switch off	1 MΩ or higher

OK → **REPLACE MAIN BODY ECU**

NG

REPAIR OR REPLACE CAN MS BUS MAIN WIRE OR CONNECTOR

Skid Control ECU Communication Stop Mode

DESCRIPTION

Detection Item	Symptom	Trouble Area
Skid Control ECU Communication Stop Mode	• "ABS/VSC/TRC" is not displayed on the "Communication Bus Check" screen of the intelligent tester • Applies to "Skid Control ECU Communication Stop Mode" in the "DTC COMBINATION TABLE"	• Power source circuit of skid control ECU • Skid control ECU branch wire or connector • Brake actuator assembly (Skid control ECU)

WIRING DIAGRAM

without VSC:

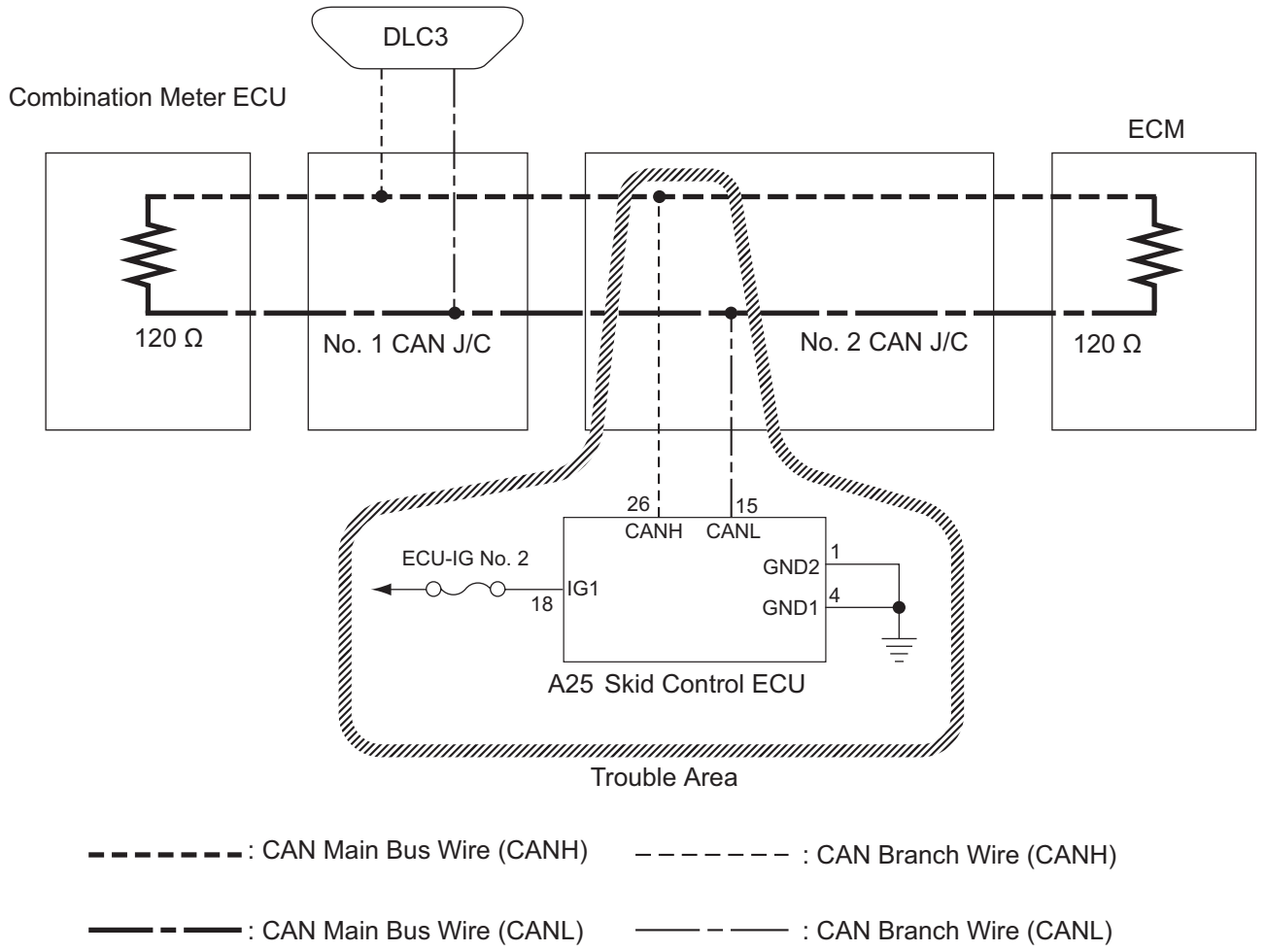

H

C126207E07

CA

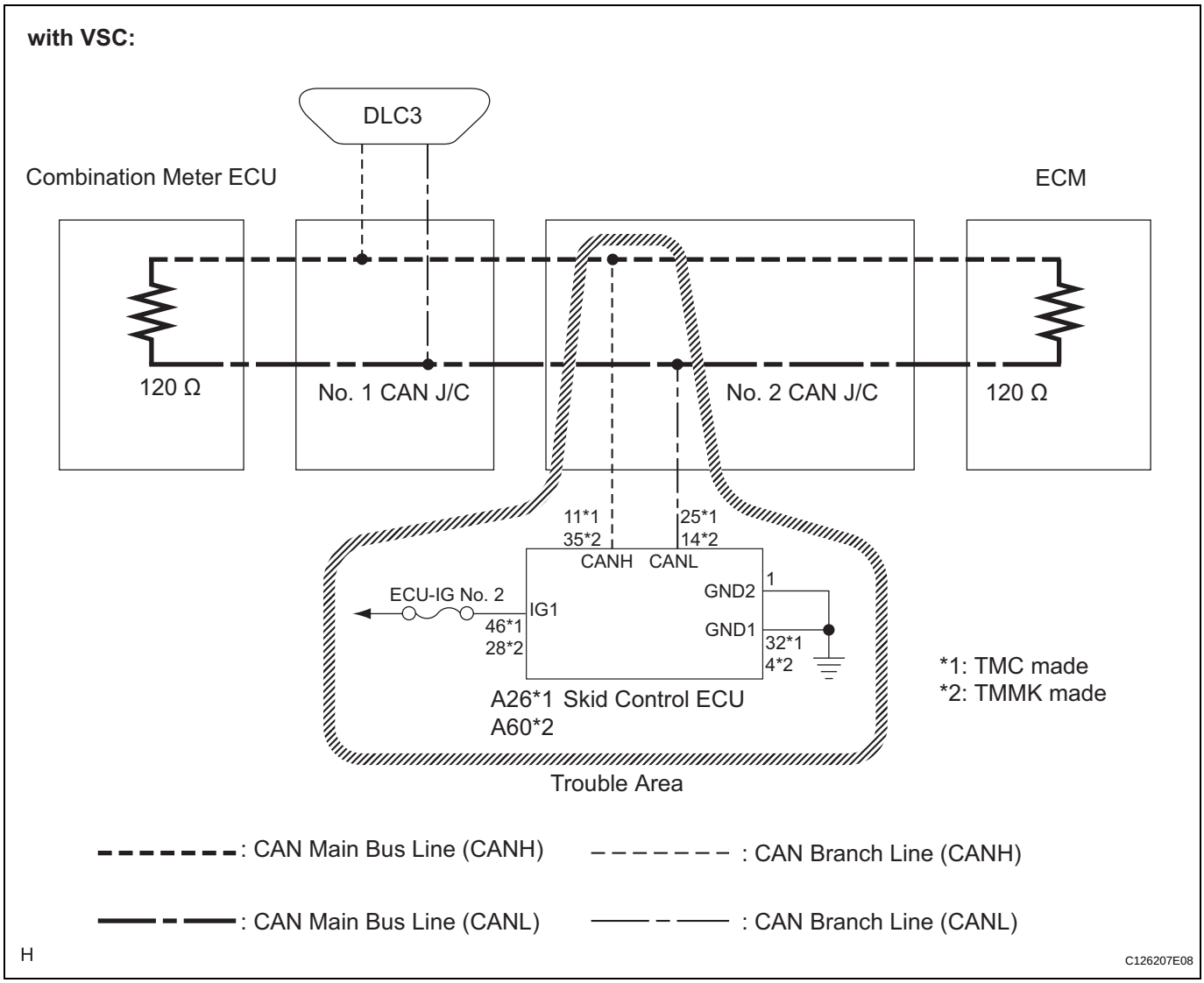

INSPECTION PROCEDURE

NOTICE:

- **Turn the ignition switch off before measuring the resistance of the CAN main wire and CAN branch wires.**
- **After the ignition switch is turned off, check that the key reminder warning system and light reminder warning system are not operating.**
- **Before measuring the resistance, leave the vehicle as is for at least 1 minute and do not operate the ignition switch, any other switches or the doors. If doors need to be opened in order to check connectors, open the doors and leave them open.**

HINT:

Operating the ignition switch, any other switches or any triggers related ECU and sensor communication on the CAN, which would cause resistance reading variations.

1	CHECK OPEN IN CAN BUS WIRE (SKID CONTROL ECU BRANCH WIRE)

(a) Turn the ignition switch off.
(b) Disconnect the skid control ECU connector.

Skid Control ECU Connector (Front View):

without VSC:

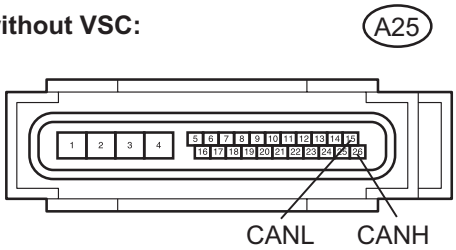

with VSC (TMC Made):

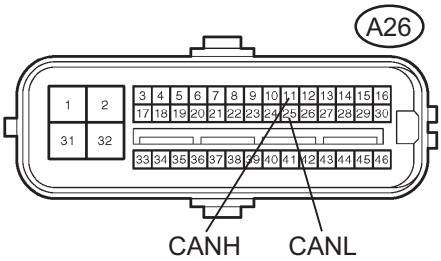

with VSC (TMMK Made):

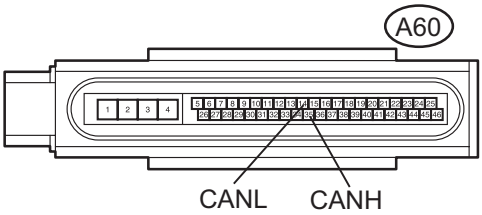

C133241E01

OK

(c) Measure the resistance according to the value(s) in the table below.

Standard resistance:

without VSC

Tester Connection	Condition	Specified Value
A25-26 (CANH) - A25-15 (CANL)	Ignition switch off	54 to 69 Ω

with VSC (TMC made)

Tester Connection	Condition	Specified Value
A26-11 (CANH) - A26-25 (CANL)	Ignition switch off	54 to 69 Ω

with VSC (TMMK made)

Tester Connection	Condition	Specified Value
A60-35 (CANH) - A60-14 (CANL)	Ignition switch off	54 to 69 Ω

NG → **REPAIR OR REPLACE SKID CONTROL ECU BRANCH WIRE OR CONNECTOR (CAN-H, CAN-L)**

CA

2 CHECK WIRE HARNESS (IG1, GND1, GND2)

Skid Control ECU Connector (Front View):

without VSC:

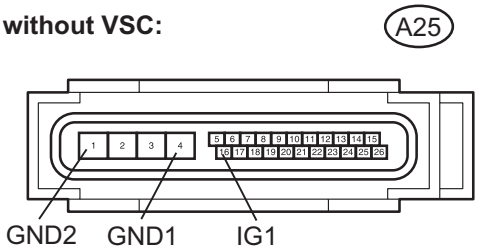

with VSC (TMC Made):

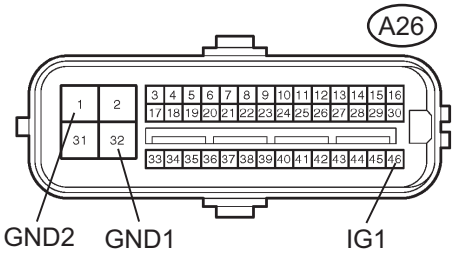

with VSC (TMMK Made):

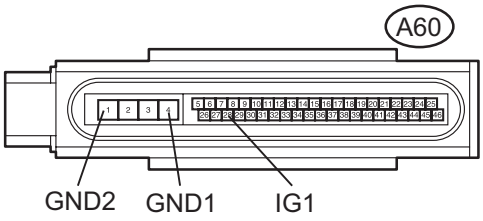

C133241E02

(a) Measure the resistance according to the value(s) in the table below.
Standard resistance:
without VSC

Tester Connection	Condition	Specified Value
A25-4 (GND1) - Body ground	Always	Below 1 Ω
A25-1 (GND2) - Body ground	Always	Below 1 Ω

with VSC (TMC made)

Tester Connection	Condition	Specified Value
A26-32 (GND1) - Body ground	Always	Below 1 Ω
A26-1 (GND2) - Body ground	Always	Below 1 Ω

with VSC (TMMK made)

Tester Connection	Condition	Specified Value
A60-4 (GND1) - Body ground	Always	Below 1 Ω
A60-1 (GND2) - Body ground	Always	Below 1 Ω

(b) Measure the voltage according to the value(s) in the table below.
Standard voltage:
without VSC

Tester Connection	Condition	Specified Value
A25-18 (IG1) - Body ground	Ignition switch on (IG)	10 to 14 V

with VSC (TMC made)

Tester Connection	Condition	Specified Value
A26-46 (IG1) - Body ground	Ignition switch on (IG)	10 to 14 V

with VSC (TMMK made)

Tester Connection	Condition	Specified Value
A60-28 (IG1) - Body ground	Ignition switch on (IG)	10 to 14 V

NG → **REPAIR OR REPLACE HARNESS OR CONNECTOR**

OK

REPLACE BRAKE ACTUATOR ASSEMBLY

Air Conditioning Amplifier Communication Stop Mode

DESCRIPTION

Detection Item	Symptom	Trouble Area
Air Conditioning Amplifier Communication Stop Mode	• "Air Conditioner" not displayed on "Communication Bus Check" screen of intelligent tester • Applies to "Air Conditioning Amplifier Communication Stop Mode" in "DTC combination table"	• Power source circuit of the air conditioning amplifier • Air conditioning amplifier branch wire or connector • Air conditioning amplifier

WIRING DIAGRAM

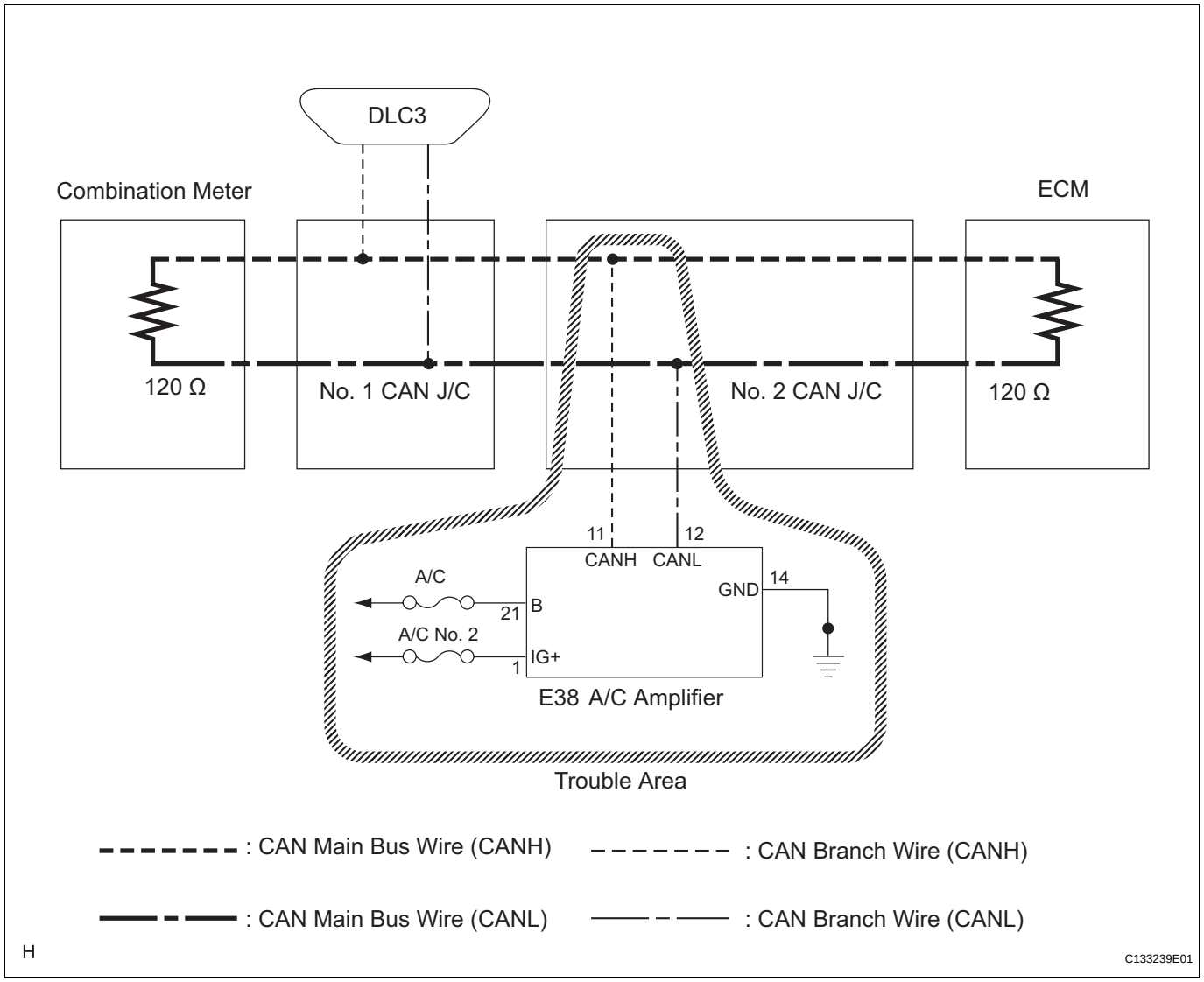

INSPECTION PROCEDURE

NOTICE:

- **Turn the ignition switch off before measuring the resistance of the CAN main wire and CAN branch wires.**
- **After the ignition switch is turned off, check that the key reminder warning system and light reminder warning system are not operating.**

CA

- **Before measuring the resistance, leave the vehicle as is for at least 1 minute and do not operate the ignition switch, any other switches or the doors. If doors need to be opened in order to check connectors, open the doors and leave them open.**

HINT:
Operating the ignition switch, any other switches or any triggers related ECU and sensor communication on the CAN, which would cause resistance reading variations.

1 CHECK CAN BUS LINE FOR DISCONNECTION (AIR CONDITIONING AMPLIFIER BRANCH WIRE)

Air Conditioning Amplifier (Wire Harness Side):

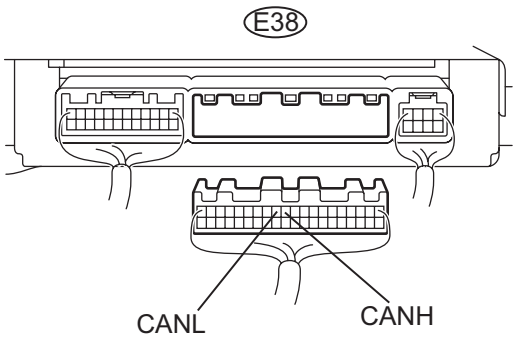

H E124470E21

(a) Turn the ignition switch off.
(b) Disconnect the air conditioning amplifier connector.
(c) Measure the resistance according to the value(s) in the table below.

Standard resistance

Tester Connection	Condition	Specified Condition
E38-11 (CANH) - E38-12 (CANL)	Ignition Switch off	54 to 69 Ω

NG → **REPAIR OR REPLACE CAN BRANCH WIRE CONNECTED TO AIR CONDITIONING AMPLIFIER (CAN-H, CAN-L)**

OK

2 CHECK HARNESS AND CONNECTOR (IG+, B, GND)

Air Conditioning Amplifier (Wire Harness Side):

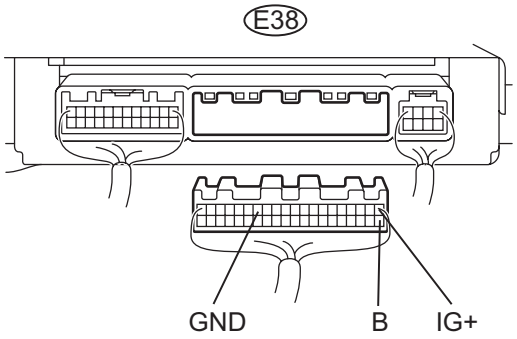

H E124470E22

(a) Disconnect the air conditioning amplifier connector.
(b) Measure the resistance according to the value(s) in the table below.

Standard resistance

Tester Connection	Condition	Specified Condition
E38-14 (GND) - Body Ground	Always	Below 1 Ω

(c) Measure the voltage according to the value(s) in the table below.

Standard voltage

Tester Connection	Condition	Specified Condition
E38-1 (IG+) - Body Ground	Ignition Switch on (IG)	10 to 14 V
E38-21 (B)- Body Ground	Always	10 to 14 V

NG → **REPAIR OR REPLACE HARNESS OR CONNECTOR**

CA

OK

REPLACE AIR CONDITIONING AMPLIFIER

Steering Angle Sensor Communication Stop Mode

DESCRIPTION

Detection Item	Symptom	Trouble Area
Steering Angle Sensor Communication Stop Mode	• "Steering Angle Sensor" is not displayed on the "Communication Bus Check" screen of the intelligent tester • Applies to "Steering Angle Sensor Communication Stop Mode" in the "DTC COMBINATION TABLE"	• Power source circuit of the steering angle sensor • Steering angle sensor branch wire or connector • Steering angle sensor

WIRING DIAGRAM

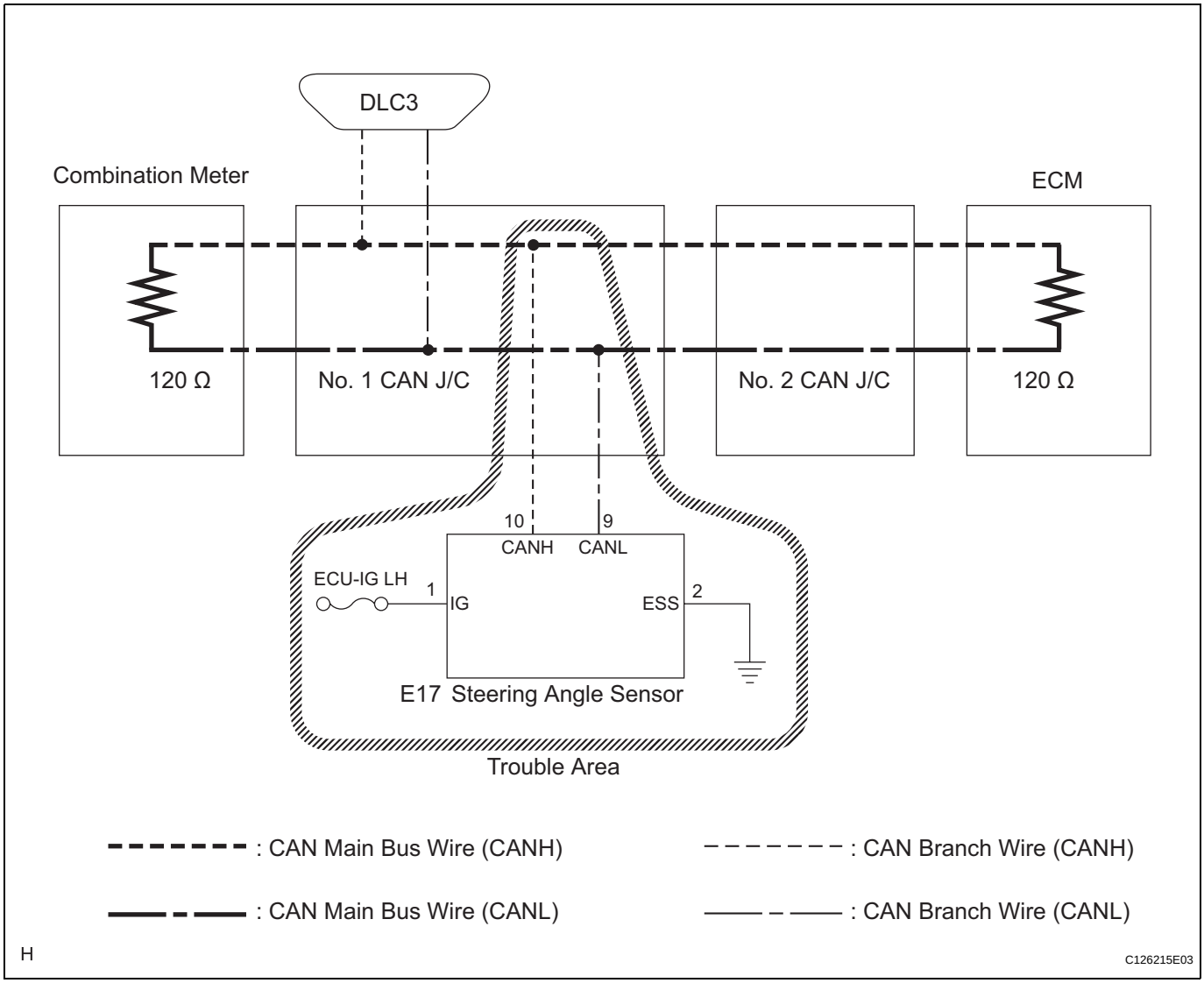

INSPECTION PROCEDURE

NOTICE:

- **Turn the ignition switch off before measuring the resistance of the CAN main wire and CAN branch wires.**
- **After the ignition switch is turned off, check that the key reminder warning system and light reminder warning system are not operating.**

- **Before measuring the resistance, leave the vehicle as is for at least 1 minute and do not operate the ignition switch, any other switches or the doors. If doors need to be opened in order to check connectors, open the doors and leave them open.**

HINT:
Operating the ignition switch, any other switches or any triggers related ECU and sensor communication on the CAN, which would cause resistance reading variations.

1 CHECK OPEN IN CAN BUS WIRE (STEERING ANGLE SENSOR BRANCH LINE)

Steering Angle Sensor Connector (Wire Harness View):

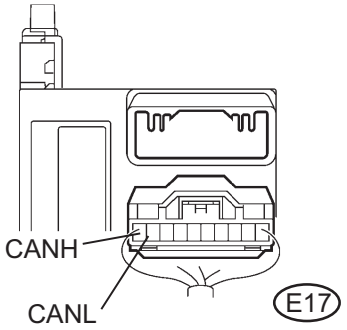

G030155E40

(a) Turn the ignition switch off.
(b) Disconnect the steering angle sensor connector.
(c) Measure the resistance according to the value(s) in the table below.

Standard resistance

Tester Connection	Condition	Specified Value
E17-10 (CANH) - E17-9 (CANL)	Ignition switch off	54 to 69 Ω

NG → **REPAIR OR REPLACE STEERING ANGLE SENSOR BRANCH WIRE OR CONNECTOR (CANH, CANL)**

OK

2 CHECK WIRE HARNESS (IG, ESS)

Steering Angle Sensor Connector (Wire Harness View):

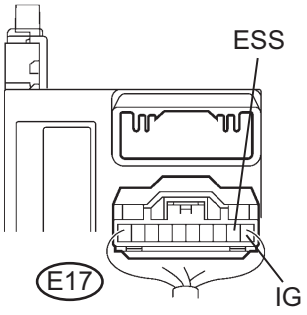

G030155E41

(a) Measure the resistance according to the value(s) in the table below.

Standard resistance

Tester Connection	Condition	Specified Value
E17-2 (ESS) - Body ground	Always	Below 1 Ω

(b) Measure the voltage according to the value(s) in the table below.

Standard voltage

Tester Connection	Condition	Specified Value
E17-1 (IG) - Body ground	Ignition switch on (IG)	10 to 14 V

NG → **REPAIR OR REPLACE HARNESS OR CONNECTOR**

OK

REPLACE STEERING ANGLE SENSOR

CA

Yaw Rate Sensor Communication Stop Mode

DESCRIPTION

Detection Item	Symptom	Trouble Area
Yaw Rate Sensor Communication Stop Mode	• "Yaw Rate/Decelerate Sensor" is not displayed on the "Communication Bus Check" screen of the intelligent tester • Applies to "Yaw Rate Sensor Communication Stop Mode" in the "DTC COMBINATION TABLE"	• Power source circuit of the yaw rate sensor • Yaw rate sensor branch wire or connector • Yaw rate sensor

WIRING DIAGRAM

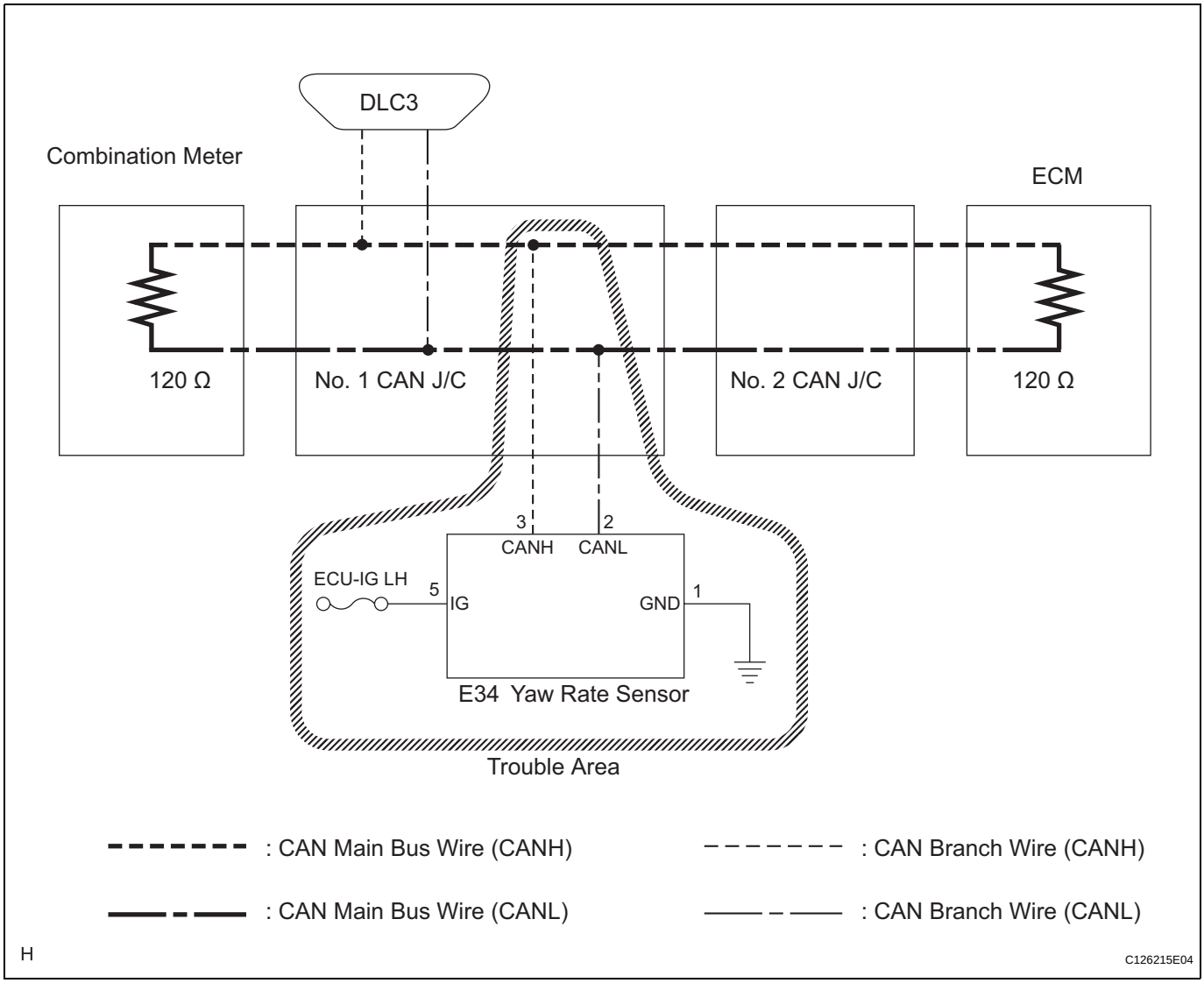

INSPECTION PROCEDURE

NOTICE:

- **Turn the ignition switch off before measuring the resistance of the CAN main wire and CAN branch wires.**
- **After the ignition switch is turned off, check that the key reminder warning system and light reminder warning system are not operating.**

- **Before measuring the resistance, leave the vehicle as is for at least 1 minute and do not operate the ignition switch, any other switches or the doors. If doors need to be opened in order to check connectors, open the doors and leave them open.**

HINT:
Operating the ignition switch, any other switches or any triggers related ECU and sensor communication on the CAN, which would cause resistance reading variations.

1	CHECK OPEN IN CAN BUS WIRE (YAW RATE SENSOR BRANCH LINE)

Yaw Rate Sensor Connector (Front View):

TMC Made:

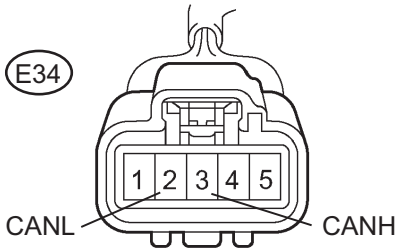

TMMK Made:

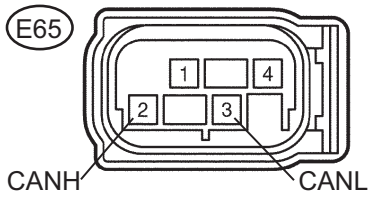

C133237E01

(a) Turn the ignition switch off.
(b) Disconnect the yaw rate sensor connector.
(c) Measure the resistance according to the value(s) in the table below.

Standard resistance:
TMC made

Tester Connection	Condition	Specified Value
E34-3 (CANH) - E34-2 (CANL)	Ignition switch off	54 to 69 Ω

TMMK made

Tester Connection	Condition	Specified Value
E65-3 (CANL) - E65-2 (CANH)	Ignition switch off	54 to 69 Ω

NG → **REPAIR OR REPLACE YAW RATE SENSOR BRANCH WIRE OR CONNECTOR (CANH, CANL)**

OK

CA

2	CHECK WIRE HARNESS (IG, GND)

Yaw Rate Sensor Connector (Front View):

TMC Made:

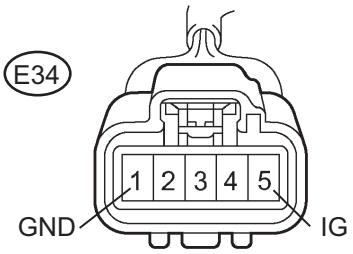

TMMK Made:

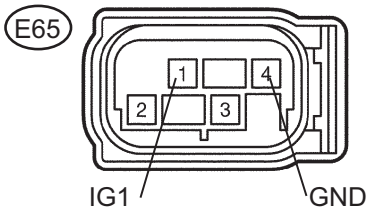

C133237E02

(a) Measure the resistance according to the value(s) in the table below.

Standard resistance:

TMC made

Tester Connection	Condition	Specified Value
E34-1 (GND) - Body ground	Always	Below 1 Ω

TMMK made

Tester Connection	Condition	Specified Value
E65-4 (GND) - Body ground	Always	Below 1 Ω

(b) Measure the voltage according to the value(s) in the table below.

Standard voltage:

TMC made

Tester Connection	Condition	Specified Value
E34-5 (IG) - Body ground	Ignition switch on (IG)	10 to 14 V

TMMK made

Tester Connection	Condition	Specified Value
E65-1 (IG1) - Body ground	Ignition switch on (IG)	10 to 14 V

NG → **REPAIR OR REPLACE HARNESS OR CONNECTOR**

OK

REPLACE YAW RATE AND ACCELERATION SENSOR

CA

ECM Communication Stop Mode

DESCRIPTION

Detection Item	Symptom	Trouble Area
ECM Communication Stop Mode	• "Engine" and "ECT" are not displayed on the "Communication Bus Check" screen of the intelligent tester • Applies to "ECM Communication Stop Mode" in the "DTC COMBINATION TABLE"	• Power source circuit of the ECM • ECM main bus wire or connector • ECM

WIRING DIAGRAM

2AZ-FE:

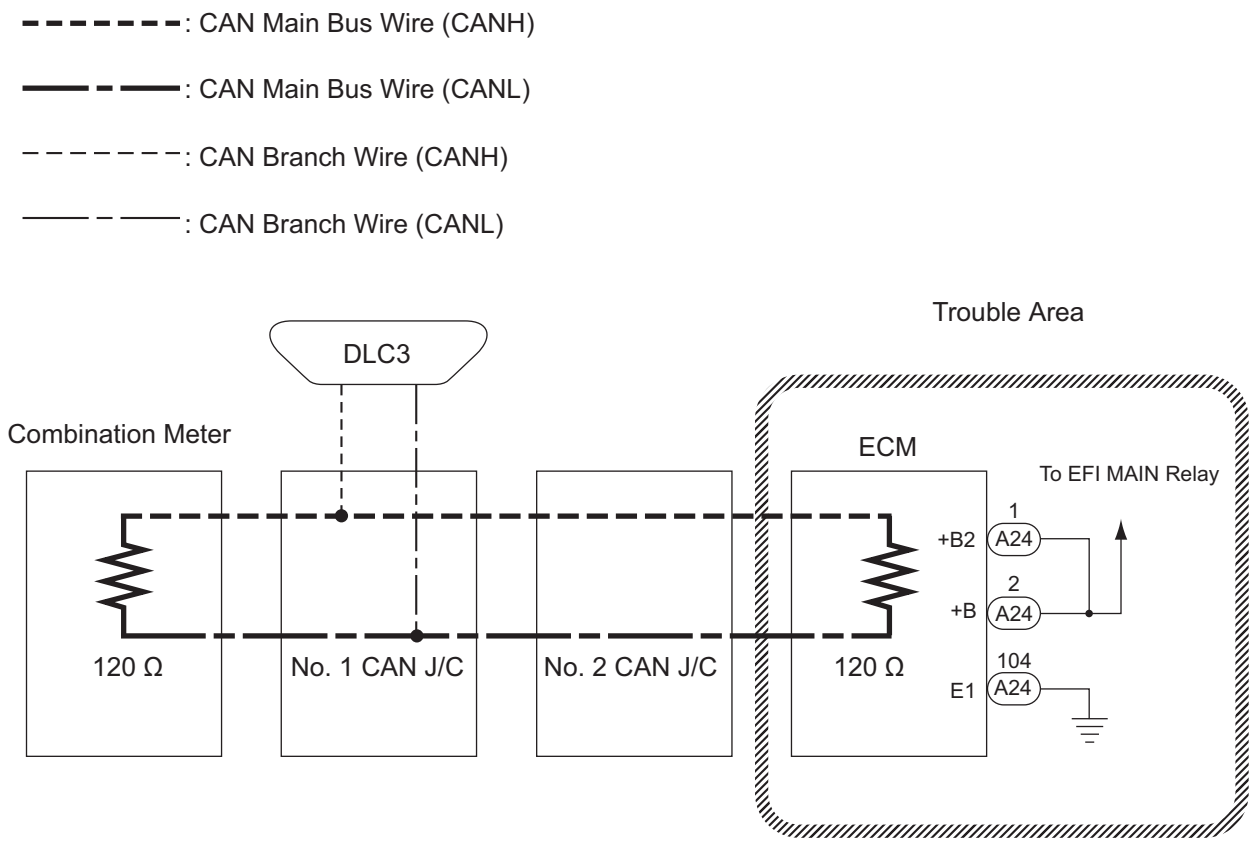

H

C126217E08

CA

2GR-FE:

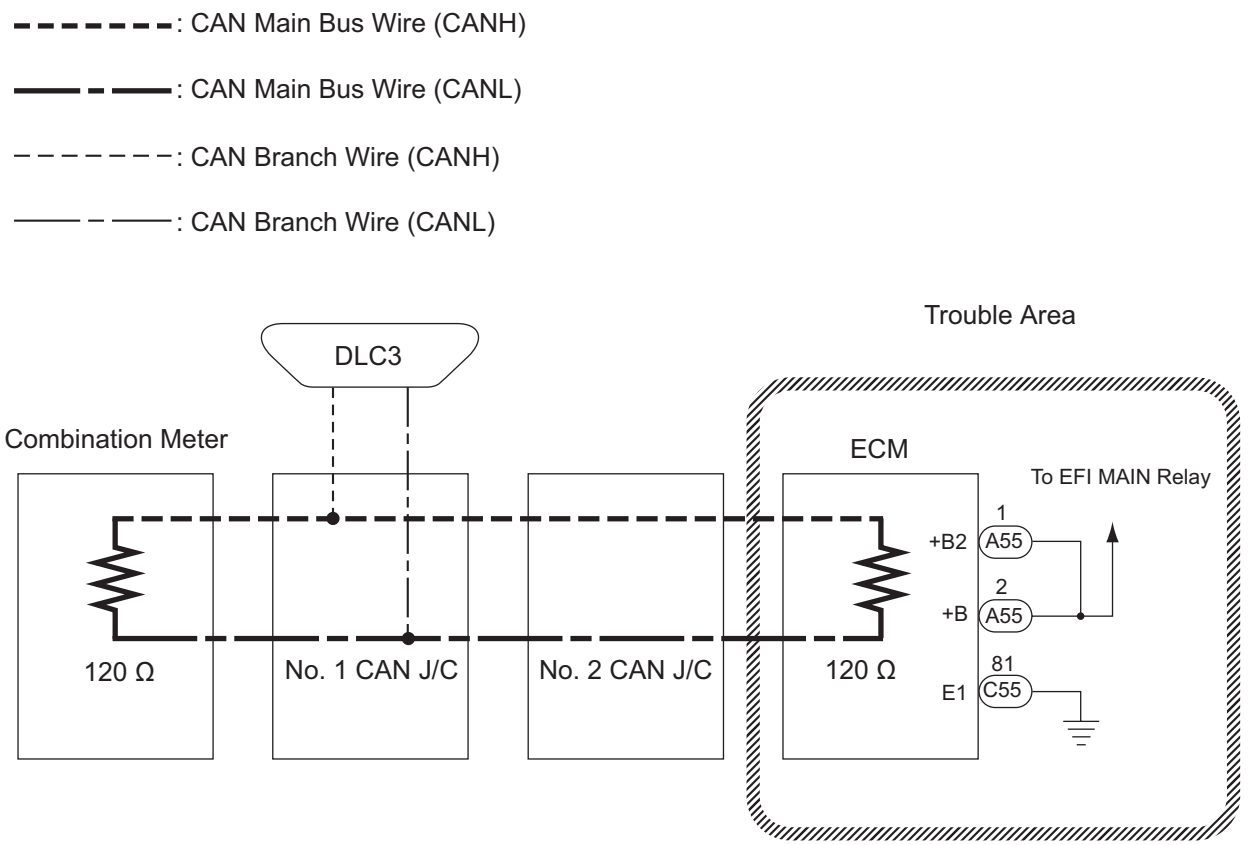

H

C126217E09

INSPECTION PROCEDURE

NOTICE:

- **Turn the ignition switch off before measuring the resistance of the CAN main wire and CAN branch wires.**
- **After the ignition switch is turned off, check that the key reminder warning system and light reminder warning system are not operating.**
- **Before measuring the resistance, leave the vehicle as is for at least 1 minute and do not operate the ignition switch, any other switches or the doors. If doors need to be opened in order to check connectors, open the doors and leave them open.**

HINT:

Operating the ignition switch, any other switches or any triggers related ECU and sensor communication on the CAN, which would cause resistance reading variations.

1 CHECK CAN BUS LINE FOR DISCONNECTION (ECU MAIN BUS LINE)

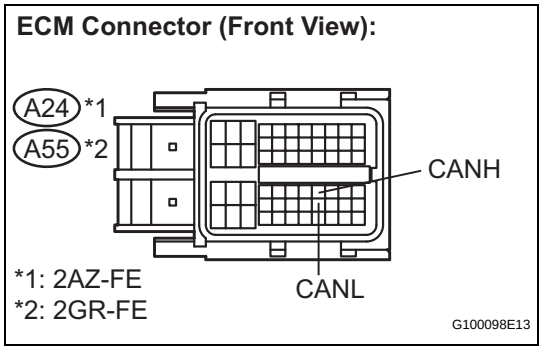

(a) Reconnect the CAN main bus line connector (A40) to the No. 2 CAN J/C (front side of the vehicle).
(b) Disconnect the ECM connector.
(c) Measure the resistance according to the value(s) in the table below.

Standard resistance:

2AZ-FE

Tester Connection	Condition	Specified Value
A24-38 (CANH) - A24-46 (CANL)	Ignition switch off	108 to 132 Ω

2GR-FE

Tester Connection	Condition	Specified Value
A55-38 (CANH) - A55-46 (CANL)	Ignition switch off	108 to 132 Ω

NG → **REPAIR OR REPLACE CAN MAIN WIRE OR CONNECTOR**

OK

2 CHECK ECM POWER SOURCE CIRCUIT

(a) Check the ECM power source circuit (2AZ-FE: See page ES-380 or 2GR-FE: See page ES-432)

NG → **REPAIR OR REPLACE ECM POWER SOURCE CIRCUIT**

OK

REPLACE ECM

CA

Main Body ECU Communication Stop Mode

DESCRIPTION

Detection Item	Symptom	Trouble Area
Main Body ECU Communication Stop Mode	• "Integrated J/B" not displayed on "Communication Bus Check" screen of the intelligent tester • Applies to "Main Body ECU Communication Stop Mode" in "DTC combination table"	• Power source circuit of the main body ECU • Main body ECU branch wire or connector • Main body ECU

WIRING DIAGRAM

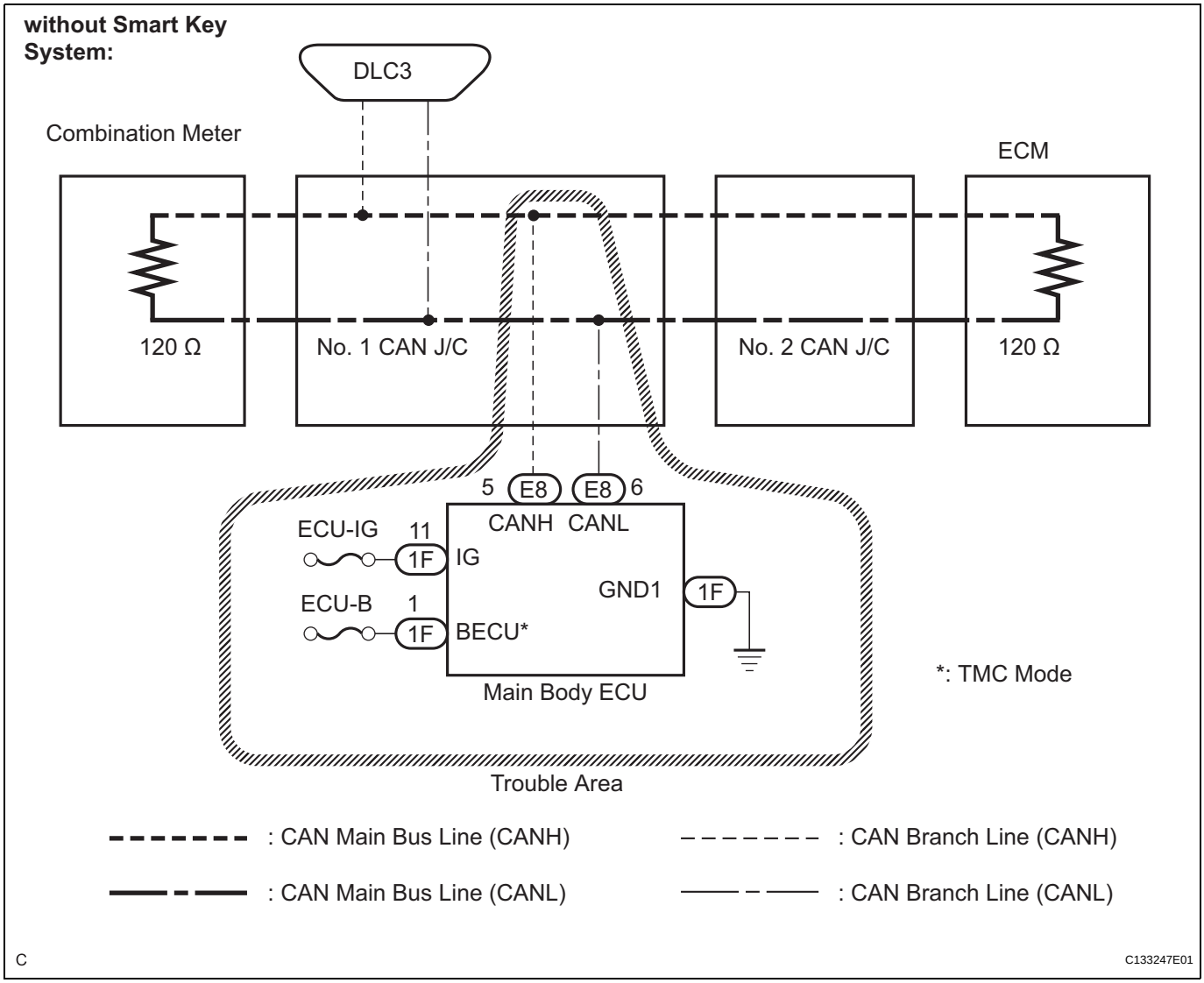

CA

with Smart Key System:

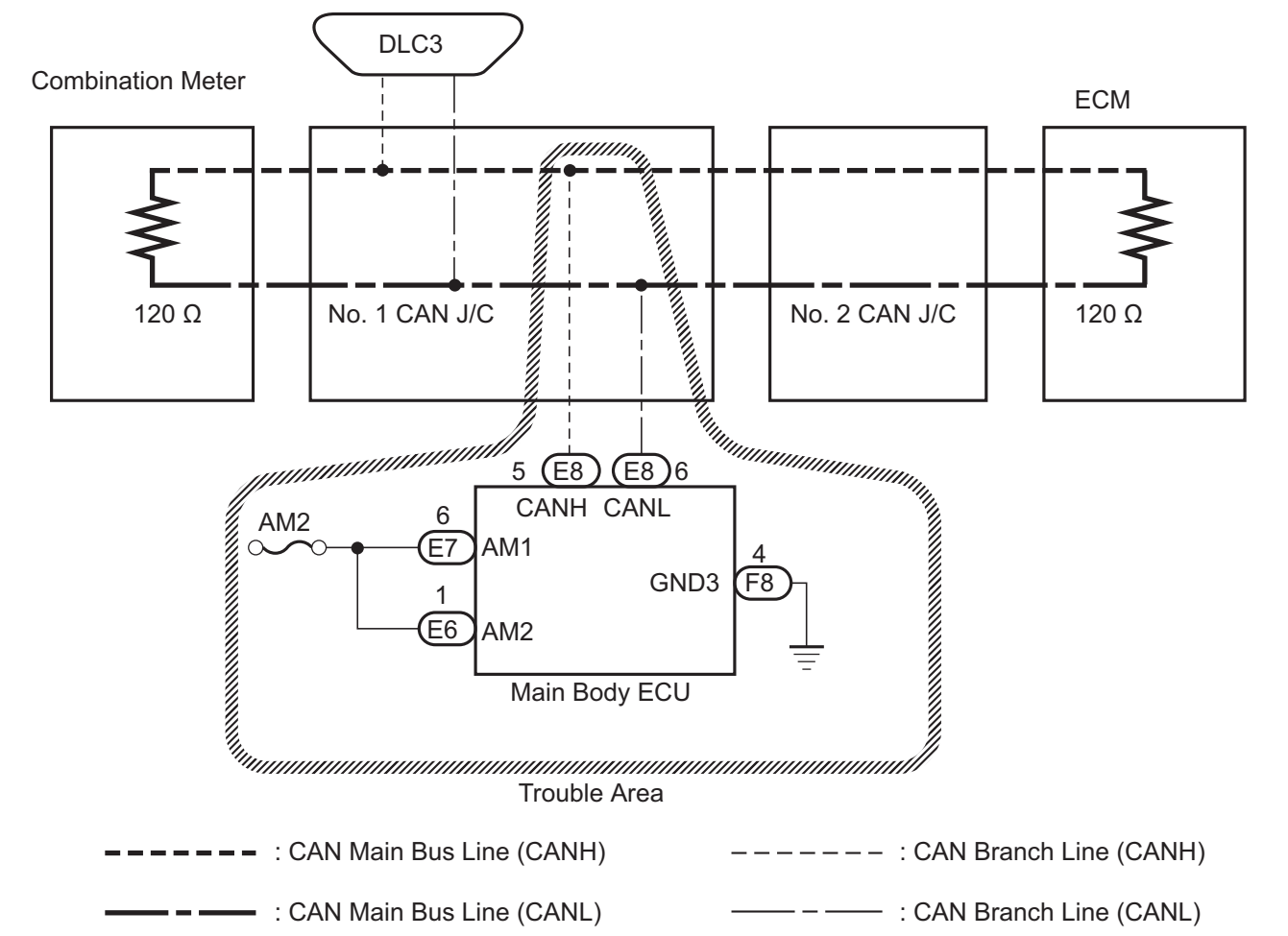

INSPECTION PROCEDURE

NOTICE:

- **Turn the ignition switch off before measuring the resistance of the CAN main wire and CAN branch wires.**
- **After the ignition switch is turned off, check that the key reminder warning system and light reminder warning system are not operating.**
- **Before measuring the resistance, leave the vehicle as is for at least 1 minute and do not operate the ignition switch, any other switches or the doors. If doors need to be opened in order to check connectors, open the doors and leave them open.**

HINT:

Operating the ignition switch, any other switches or any triggers related ECU and sensor communication on the CAN, which would cause resistance reading variations.

1 CHECK CAN BUS LINE FOR DISCONNECTION (MAIN BODY ECU BRANCH WIRE)

Main Body ECU Connector (Front View):

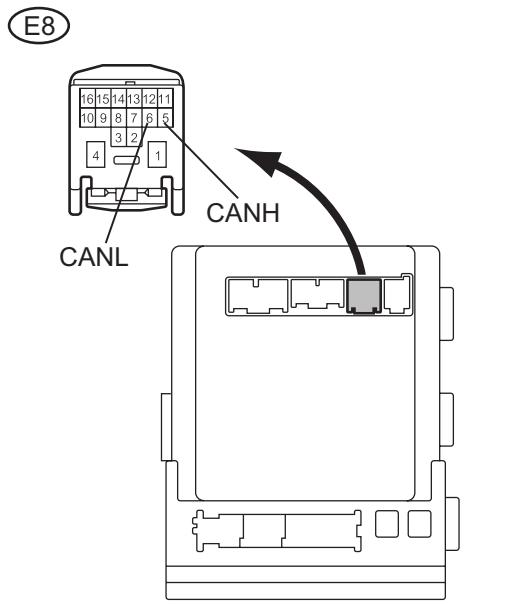

H B137983E02

(a) Turn the ignition switch off.
(b) Disconnect the main body ECU connector.
(c) Measure the resistance according to the value(s) in the table below.

Standard resistance

Tester Connection	Condition	Specified Condition
E8-5 (CANH) - E8-6 (CANL)	Ignition switch off	54 to 69 Ω

NG → **REPAIR OR REPLACE CAN BRANCH WIRE CONNECTED TO MAIN BODY ECU (CAN-H, CAN-L)**

OK

2 CHECK HARNESS AND CONNECTOR (BECU, IG, GND1)

Wire Harness Side:

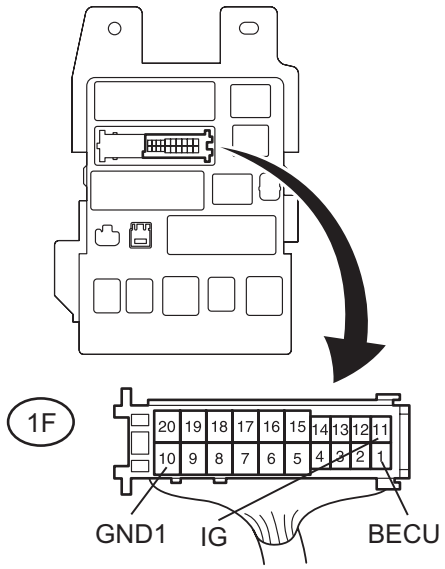

N C133238E01

(a) without Smart Key System
  (1) Disconnect the 1F J/B connector.
  (2) Measure the resistance according to the value(s) in the table below.

Standard resistance

Tester Connection	Condition	Specified Condition
1F-10 (GND1) - Body ground	Always	Below 1 Ω

  (3) Measure the voltage according to the value(s) in the table below.

Standard voltage

Tester Connection	Condition	Specified Condition
1F-1 (BECU)* - Body ground	Always	10 to 14 V
1F-11 (IG) - Body ground	Ignition switch on (IG)	10 to 14 V

*: TMC Made only

  (4) Reconnect the J/B connector.

CA

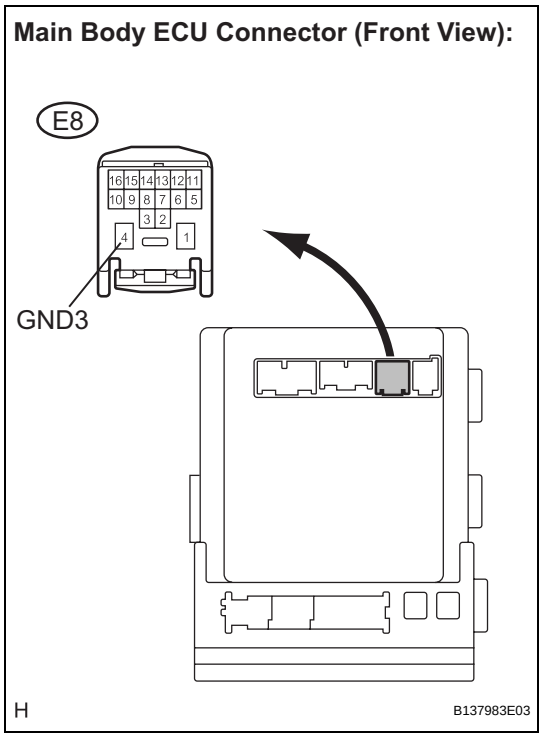

(b) with Smart Key System
(1) Disconnect the E8 main body ECU connector.
(2) Measure the resistance according to the value(s) in the table below.
Standard resistance

Tester Connection	Condition	Specified Condition
E8-4 (GND3) - Body ground	Always	Below 1 Ω

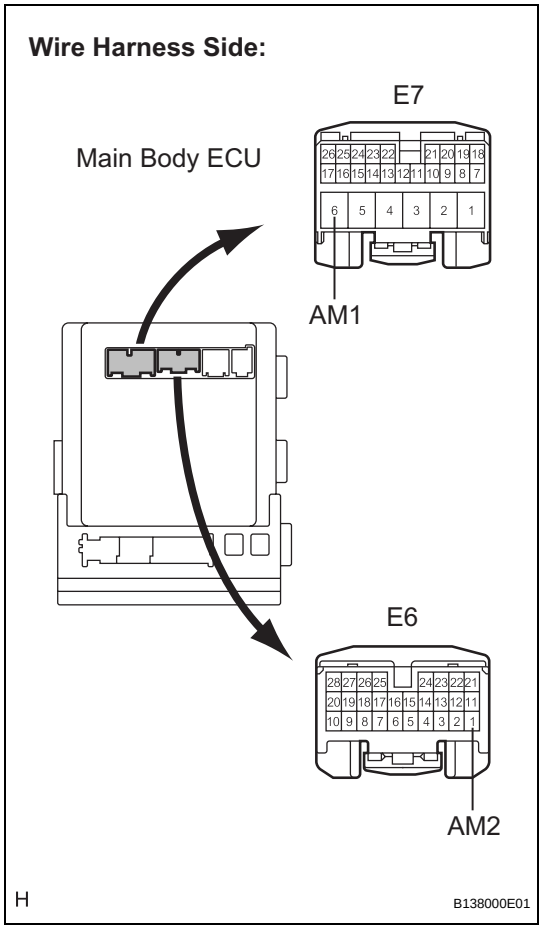

(3) Disconnect the E6 and E7 main body ECU connectors.
(4) Measure the voltage according to the value(s) in the table below.
Standard voltage

Tester Connection	Condition	Specified Condition
E7-6 (AM1) - Body ground	Always	10 to 14 V
E6-1 (AM2) - Body ground	Always	10 to 14 V

*: TMC Made only
(5) Reconnect the main body ECU connectors.

NG → **REPAIR OR REPLACE HARNESS OR CONNECTOR**

OK

REPLACE MAIN BODY ECU

Combination Meter ECU Communication Stop Mode

DESCRIPTION

Detection Item	Symptom	Trouble Area
Combination Meter ECU Communication Stop Mode	• "Combination Meter" not displayed on "Communication Bus Check" screen of intelligent tester • Applies to "Combination Meter ECU Communication Stop Mode" in "DTC combination table"	• Power source circuit of the combination meter • Combination meter main bus wire or connector • Combination meter

WIRING DIAGRAM

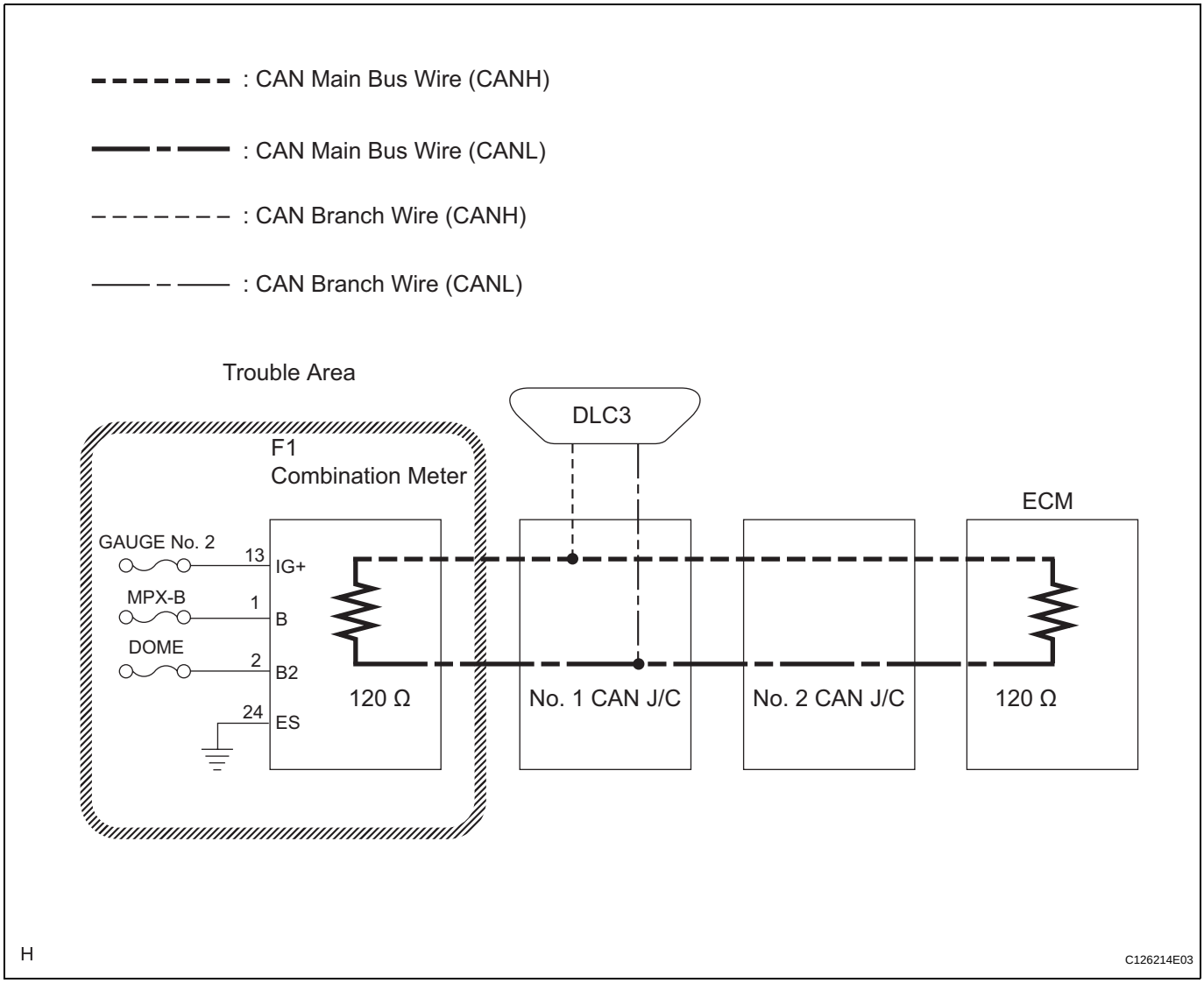

INSPECTION PROCEDURE

NOTICE:

- **Turn the ignition switch off before measuring the resistance of the CAN main wire and CAN branch wires.**
- **After the ignition switch is turned off, check that the key reminder warning system and light reminder warning system are not operating.**

- **Before measuring the resistance, leave the vehicle as is for at least 1 minute and do not operate the ignition switch, any other switches or the doors. If doors need to be opened in order to check connectors, open the doors and leave them open.**

HINT:
Operating the ignition switch, any other switches or any triggers related ECU and sensor communication on the CAN, which would cause resistance reading variations.

1 CHECK CAN BUS LINE FOR DISCONNECTION (COMBINATION METER MAIN BUS WIRE)

Combination Meter Connector (Wire Harness Side View):

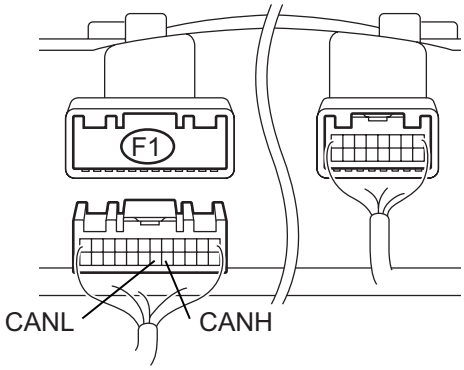

H C133243E01

(a) Turn the ignition switch off.
(b) Disconnect the combination meter connector.
(c) Measure the resistance according to the value(s) in the table below.

Standard resistance

Tester Connection	Condition	Specified Condition
F1-17 (CANH) - F1-18 (CANL)	Ignition switch off	108 to 132 Ω

NG → **REPAIR OR REPLACE CAN BUS MAIN WIRE OR CONNECTOR (COMBINATION METER MAIN BUS LINE)**

OK

2 CHECK HARNESS AND CONNECTOR (ES, IG+, B2)

Combination Meter Connector (Wire Harness Side View):

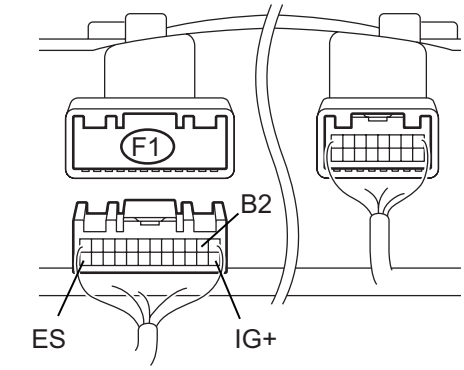

H C133243E02

(a) Disconnect the combination meter connector.
(b) Measure the resistance according to the value(s) in the table below.

Standard resistance

Tester Connection	Condition	Specified Condition
F1-24 (ES) - Body ground	Always	Below 1 Ω

(c) Measure the voltage according to the value(s) in the table below.

Standard voltage

Tester Connection	Condition	Specified Condition
F1-13 (IG+) - Body ground	Ignition switch on (IG)	10 to 14 V
F1-2 (B2) - Body ground	Always	10 to 14 V

NG → **REPAIR OR REPLACE HARNESS OR CONNECTOR**

OK

REPLACE COMBINATION METER ECU

CA

Center Airbag Sensor Communication Stop Mode

DESCRIPTION

Detection Item	Symptom	Trouble Area
Center Airbag Sensor Communication Stop Mode	• "SRS Airbag" is not displayed on the "Communication Bus Check" screen of the intelligent tester • Applies to "Center Airbag Sensor Communication Stop Mode" in the "DTC COMBINATION TABLE"	• Power source circuit of the center airbag sensor • Center airbag sensor branch wire or connector • Center airbag sensor

WIRING DIAGRAM

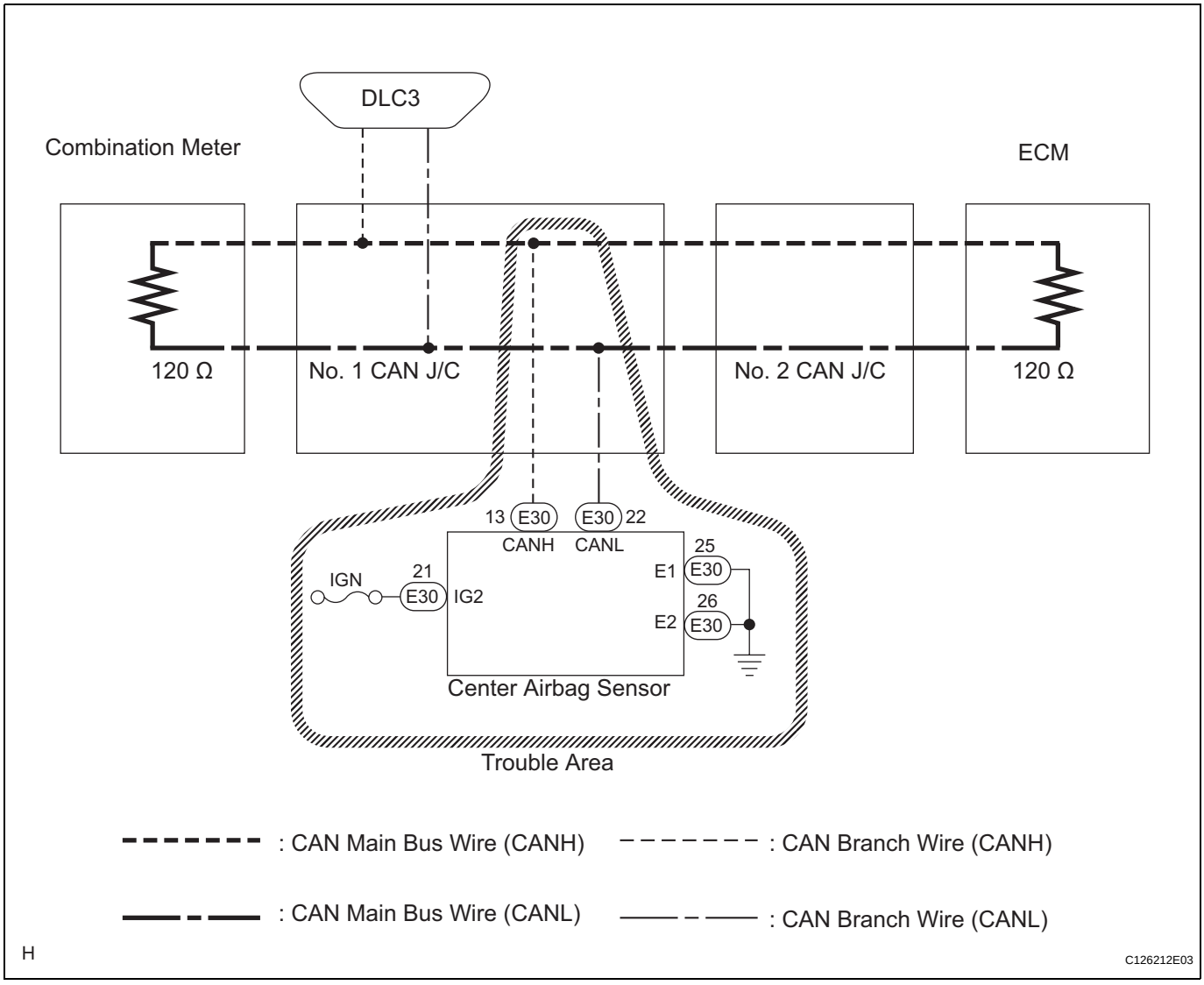

INSPECTION PROCEDURE

NOTICE:

- **Turn the ignition switch off before measuring the resistance of the CAN main wire and CAN branch wires.**
- **After the ignition switch is turned off, check that the key reminder warning system and light reminder warning system are not operating.**

- **Before measuring the resistance, leave the vehicle as is for at least 1 minute and do not operate the ignition switch, any other switches or the doors. If doors need to be opened in order to check connectors, open the doors and leave them open.**

HINT:
Operating the ignition switch, any other switches or any triggers related ECU and sensor communication on the CAN, which would cause resistance reading variations.

1 CHECK OPEN IN CAN BUS WIRE (CENTER AIRBAG SENSOR BRANCH LINE)

Center Airbag Sensor Wire Harness View:

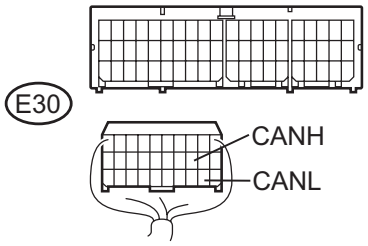

(a) Turn the ignition switch off.
(b) Disconnect the center airbag sensor connector.
(c) Measure the resistance according to the value(s) in the table below.

Standard resistance

Tester Connection	Condition	Specified Value
E30-13 (CANH) - E30-22 (CANL)	Ignition switch off	54 to 69 Ω

NG → **REPAIR OR REPLACE CENTER AIRBAG SENSOR BRANCH WIRE OR CONNECTOR**

OK

2 CHECK WIRE HARNESS (IG2, E1, E2)

Center Airbag Sensor Wire Harness View:

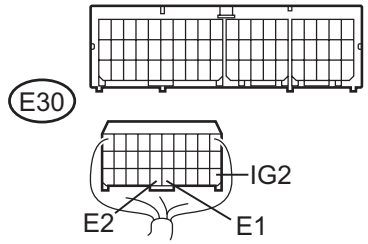

(a) Measure the resistance according to the value(s) in the table below.

Standard resistance

Tester Connection	Condition	Specified Value
E30-25 (E1) - Body ground	Always	Below 1 Ω
E30-26 (E2) - Body ground	Always	Below 1 Ω

(b) Measure the voltage according to the value(s) in the table below.

Standard voltage

Tester Connection	Condition	Specified Value
E30-21 (IG2) - Body ground	Ignition switch on (IG)	10 to 14 V

NG → **REPAIR OR REPLACE HARNESS OR CONNECTOR**

OK

REPLACE CENTER AIRBAG SENSOR

CA

CAN Bus Line

DESCRIPTION

When any DTC of the CAN communication system is output, first measure the resistance between the terminals of the DLC3 to confirm the trouble area.

WIRING DIAGRAM

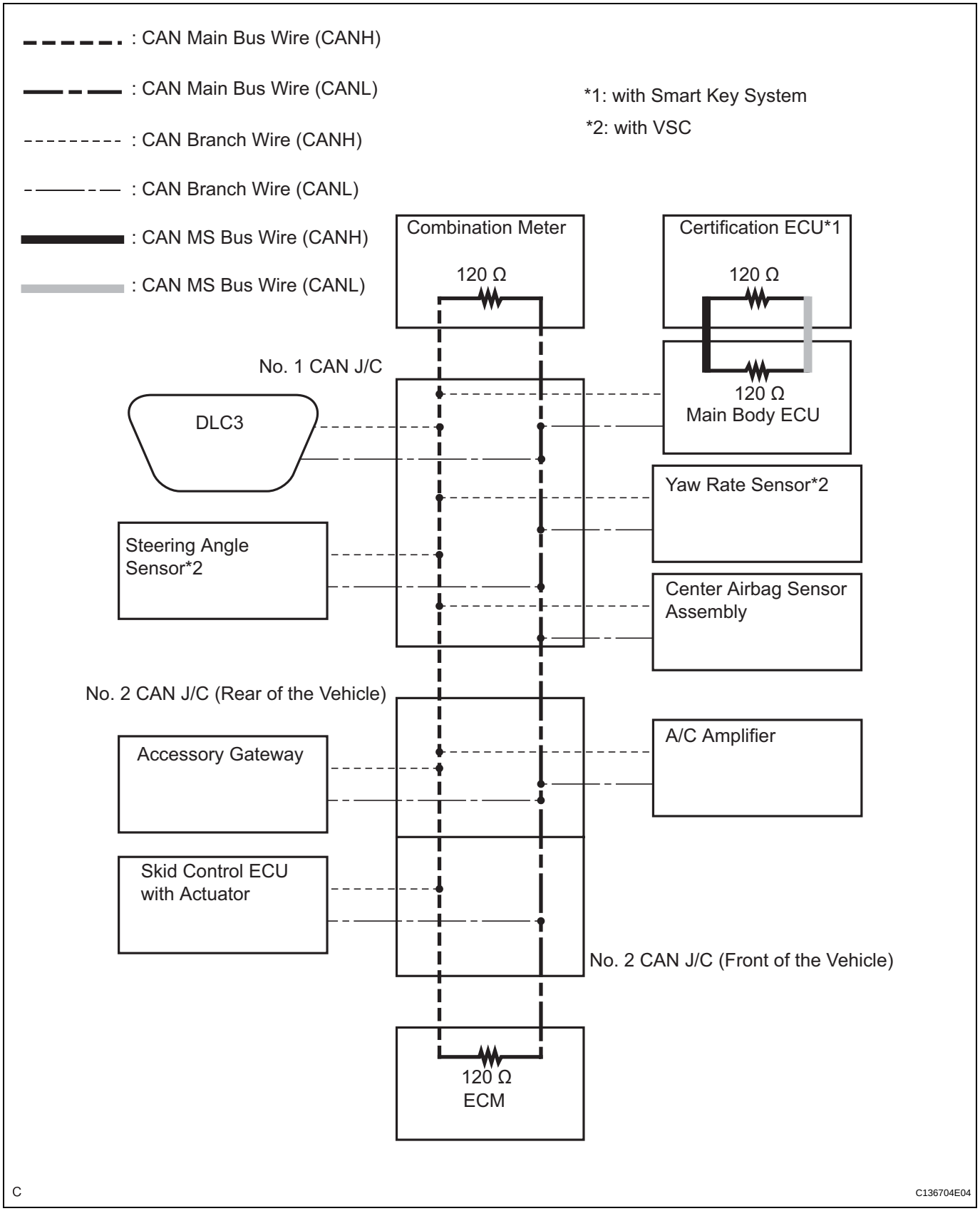

CA

INSPECTION PROCEDURE

NOTICE:

- **Turn the ignition switch off before measuring the resistance of the CAN main wire and CAN branch wires.**
- **After the ignition switch is turned off, check that the key reminder warning system and light reminder warning system are not operating.**
- **Before measuring the resistance, leave the vehicle as is for at least 1 minute and do not operate the ignition switch, any other switches or the doors. If doors need to be opened in order to check connectors, open the doors and leave them open.**

HINT:
Operating the ignition switch, any other switches or any triggers related ECU and sensor communication on the CAN, which would cause resistance reading variations.

1 CHECK CAN BUS WIRE (MAIN BUS WIRE FOR DISCONNECTION, BUS WIRES FOR SHORT CIRCUIT)

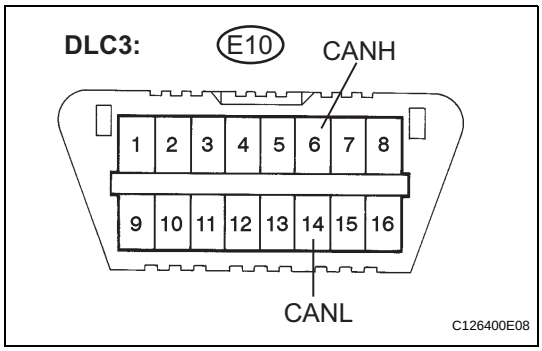

(a) Measure the resistance according to the value(s) in the table below.

Standard resistance

Tester Connection	Condition	Specified Value	Result
E10-6 (CANH) - E10-14 (CANL)	Ignition switch off	54 to 69 Ω	OK

Result

Result	Proceed to
OK	A
69 Ω or higher	B
Below 54 Ω	C

B → **OPEN IN CAN BUS MAIN WIRE (See page CA-69)**

C → **SHORT IN CAN BUS WIRES (See page CA-74)**

A

2 CHECK CAN BUS WIRE (SHORT TO B+ IN CAN BUS WIRE)

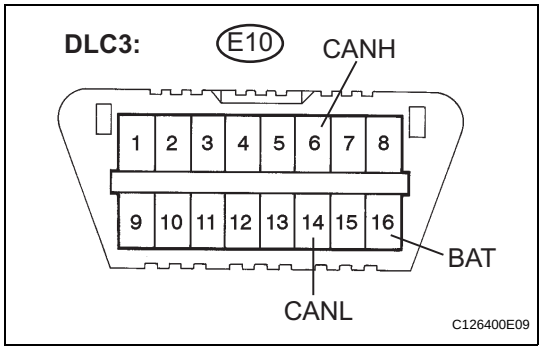

(a) Measure the resistance according to the value(s) in the table below.

Standard resistance

Tester Connection	Condition	Specified Value
E10-6 (CANH) - E10-16 (BAT)	Ignition switch off	6 kΩ or higher
E10-14 (CANL) - E10-16 (BAT)	Ignition switch off	6 kΩ or higher

NG → **SHORT TO B+ IN CAN BUS WIRE (See page CA-89)**

OK

3	**CHECK CAN BUS WIRE (SHORT TO GND IN CAN BUS WIRE)**

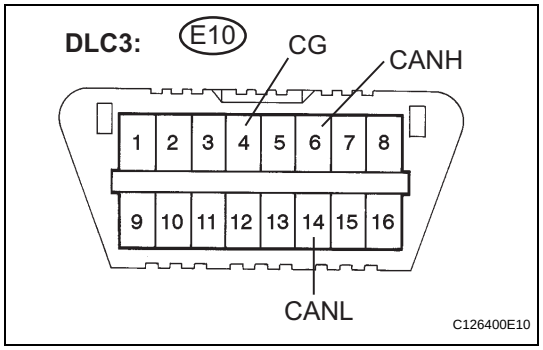

(a) Measure the resistance according to the value(s) in the table below.

Standard resistance

Tester Connection	Condition	Specified Value
E10-4 (CG) - E10-6 (CANH)	Ignition switch off	200 Ω or higher
E10-4 (CG) - E10-14 (CANL)	Ignition switch off	200 Ω or higher

NG → **SHORT TO GND IN CAN BUS WIRE (See page CA-104)**

OK

GO TO "HOW TO PROCEED WITH TROUBLESHOOTING" (See page CA-8)

CA

Open in CAN Main Bus Line

DESCRIPTION

There may be an open circuit in the CAN main bus wire and/or the DLC3 branch wire when the resistance between terminals 6 (CANH) and 14 (CANL) of the DLC3 is 69 Ω or more.

Symptom	Trouble Area
Resistance between terminals 6 (CANH) and 14 (CANL) of the DLC3 is 69 Ω or more.	• CAN main bus wire or connector • No. 1 CAN J/C • No. 2 CAN J/C • DLC3 branch wire or connector • Combination meter • ECM

WIRING DIAGRAM

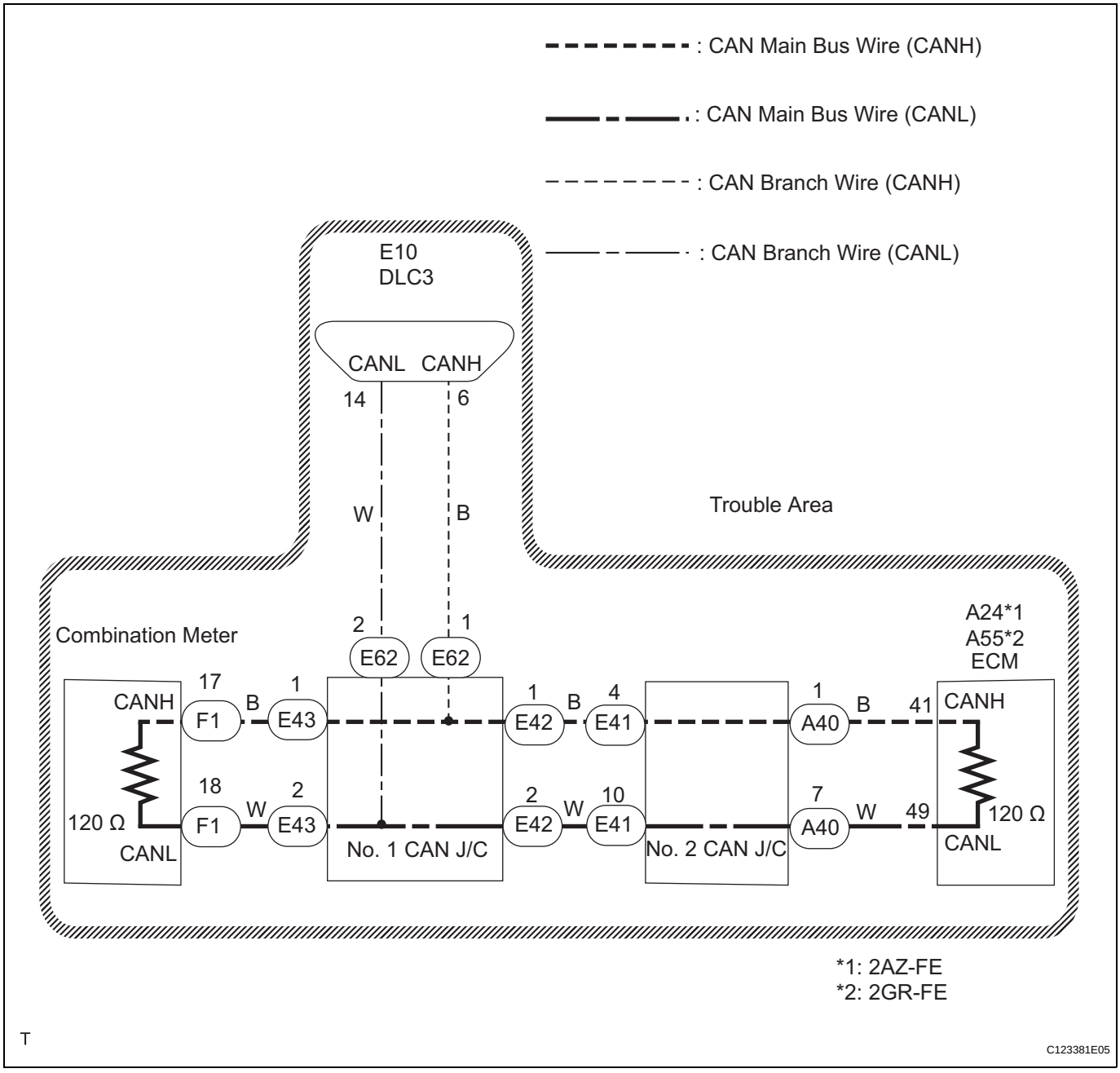

CA

INSPECTION PROCEDURE

NOTICE:

- **Turn the ignition switch off before measuring the resistance of the CAN main wire and CAN branch wires.**
- **After the ignition switch is turned off, check that the key reminder warning system and light reminder warning system are not operating.**
- **Before measuring the resistance, leave the vehicle as is for at least 1 minute and do not operate the ignition switch, any other switches or the doors. If doors need to be opened in order to check connectors, open the doors and leave them open.**

HINT:

Operating the ignition switch, any other switches or any triggers related ECU and sensor communication on the CAN, which would cause resistance reading variations.

1	CHECK DLC3

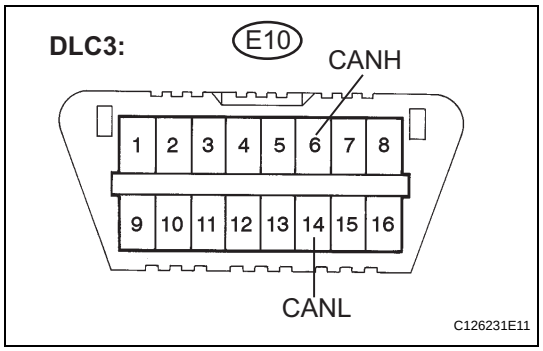

(a) Turn the ignition switch off.

(b) Measure the resistance according to the value(s) in the table below.

Standard resistance

Tester Connection	Condition	Specified Value	Result
E10-6 (CANH) - E101-14 (CANL)	Ignition switch off	108 to 132 Ω	A
E10-6 (CANH) - E10-14 (CANL)	Ignition switch off	132 Ω or higher	B

NOTICE:

When the measured value is 132 Ω or more and a CAN communication system diagnostic trouble code is output, there may be a fault besides disconnection of the DLC3 branch wire. For that reason, troubleshooting should be performed again from "HOW TO PROCEED WITH TROUBLESHOOTING" (See page CA-8) after repairing the trouble area.

B → **REPAIR OR REPLACE DLC3 BRANCH WIRE OR CONNECTOR (CANH, CANL)**

A

CA

2 CHECK FOR OPEN IN CAN BUS MAIN WIRE (COMBINATION METER MAIN BUS LINE)

No. 1 CAN “B” J/C Side (without Earth Terminal) Wire Harness Side

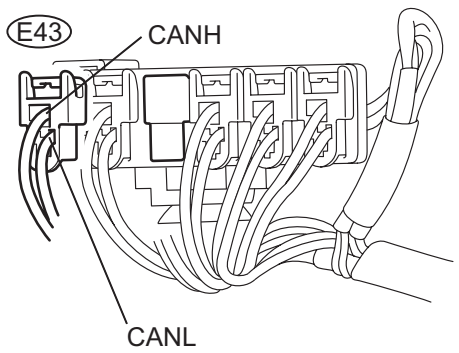

N C133231E01

(a) Disconnect the CAN main bus wire white connector (E43) from the No. 1 CAN J/C "B" side (without earth terminal).
NOTICE:
- **Before disconnecting the connector, make a note of where it is connected.**
- **Reconnect the connector to its original position.**

(b) Measure the resistance according to the value(s) in the table below.
Standard resistance

Tester Connection	Condition	Specified Value
E43-1 (CANH) - E43-2 (CANL)	Ignition switch off	108 to 132 Ω

NG → **Go to step 7**

CA

OK

3 CHECK FOR OPEN IN CAN BUS MAIN WIRE (NO. 1 CAN J/C)

No. 1 CAN J/C “A” Side (with Earth Terminal) :

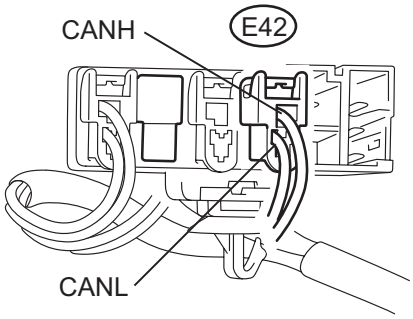

N C133228E02

(a) Reconnect the CAN main bus wire connector (E43) to the No. 1 CAN J/C "B" side (without earth terminal).
(b) Disconnect the CAN main bus wire white connector (E42) from the No. 1 CAN J/C "A" side (with earth terminal).
NOTICE:
- **Before disconnecting the connector, make a note of where it is connected.**
- **Reconnect the connector to its original position.**

(c) Measure the resistance according to the value(s) in the table below.
Standard resistance

Tester Connection	Condition	Specified Value
E41-1 (CANH) - E41-2 (CANL)	Ignition switch off	108 to 132 Ω

OK → **REPLACE NO. 1 CAN J/C**

NG

4 CHECK FOR OPEN IN CAN BUS MAIN WIRE (NO. 1 CAN J/C - NO. 2 CAN J/C)

No. 2 CAN J/C Connector (Rear of the Vehicle) Wire Harness Side View:

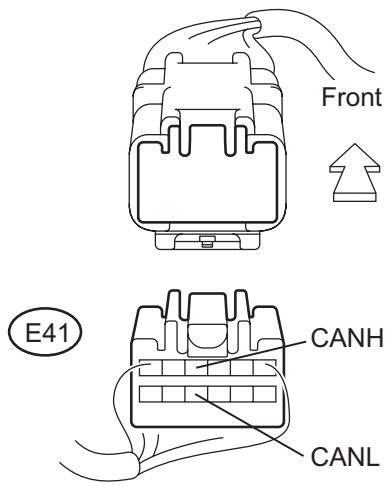

C133246E01

(a) Reconnect the CAN main bus wire connector (E42) to the No. 1 CAN J/C "A" side (with earth terminal).
(b) Disconnect the CAN main bus wire connector (E41) from the No. 2 CAN J/C (rear of the vehicle).
(c) Measure the resistance according to the value(s) in the table below.

Standard resistance

Tester Connection	Condition	Specified Value
E42-4 (CANH) - E42-10 (CANL)	Ignition switch off	108 to 132 Ω

NG → **REPAIR OR REPLACE CAN BUS MAIN WIRE OR CONNECTOR (NO. 1 CAN J/C - NO. 2 CAN J/C)**

OK

5 CHECK FOR OPEN IN CAN BUS MAIN WIRE (NO. 2 CAN J/C)

No. 2 CAN J/C Connector (Front of the Vehicle) Wire Harness Side View:

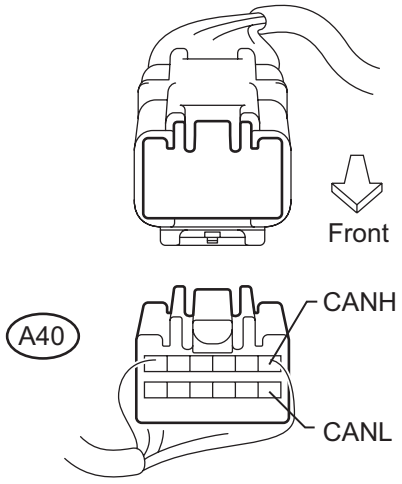

C133245E04

(a) Reconnect the CAN main bus wire connector (E41) to the No. 2 CAN J/C (rear of the vehicle).
(b) Disconnect the CAN main bus wire connector (A40) from the No. 2 CAN J/C (front of the vehicle).
(c) Measure the resistance according to the value(s) in the table below.

Standard resistance

Tester Connection	Condition	Specified Value
A40-1 (CANH) - A40-7 (CANL)	Ignition switch off	108 to 132 Ω

OK → **REPLACE NO. 2 CAN J/C**

NG

CA

6 CHECK FOR OPEN IN CAN BUS MAIN WIRE (ECM CAN MAIN BUS WIRE)

ECM Connector (Front View):

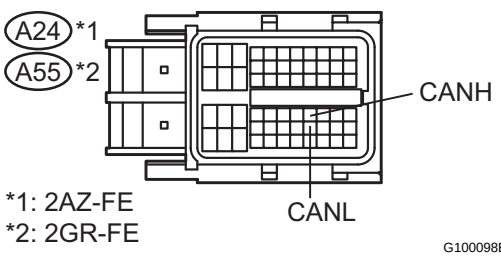

(a) Reconnect the CAN main bus wire connector (A40) to the No. 2 CAN J/C (front of the vehicle).
(b) Disconnect the ECM connector.
(c) Measure the resistance according to the value(s) in the table below.
Standard resistance:
2AZ-FE

Tester Connection	Condition	Specified Value
A24-38 (CANH) - A24-46 (CANL)	Ignition switch off	108 to 132 Ω

2GR-FE

Tester Connection	Condition	Specified Value
A55-38 (CANH) - A55-46 (CANL)	Ignition switch off	108 to 132 Ω

CA

OK → **REPLACE ECM**

NG

REPAIR OR REPLACE CAN BUS MAIN WIRE OR CONNECTOR (NO. 2 CAN J/C - ECM)

7 CHECK FOR OPEN IN CAN BUS MAIN WIRE (COMBINATION METER - NO. 1 CAN J/C)

Combination Meter Connector (Wire Harness Side View):

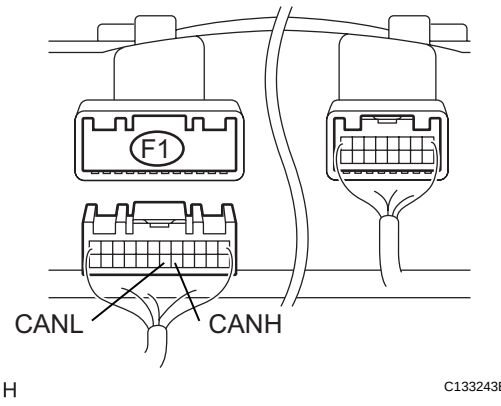

(a) Reconnect the CAN main bus wire connector (E43) to the No. 1 CAN J/C "B" side (without earth terminal).
(b) Disconnect the combination meter connector (F1).
(c) Measure the resistance according to the value(s) in the table below.
Standard resistance

Tester Connection	Condition	Specified Value
F1-17 (CANH) - F1-18 (CANL)	Ignition switch off	108 to 132 Ω

OK → **REPLACE COMBINATION METER**

NG

REPAIR OR REPLACE CAN BUS MAIN WIRE OR CONNECTOR (NO. 1 CAN J/C - COMBINATION METER)

Short in CAN Bus Lines

DESCRIPTION

The CAN bus wires are considered to be shorted when the resistance between terminals 6 (CANH) and 14 (CANL) of the DLC3 is below 54 Ω.

Symptom	Trouble Area
Resistance between terminals 6 (CANH) and 14 (CANL) of the DLC3 is below 54 Ω.	• Short in CAN bus wires • Brake actuator assembly (Skid control ECU) • Steering angle sensor • Yaw rate sensor • ECM • Combination meter • Main body ECU • A/C amplifier • Center airbag sensor • No. 1 CAN J/C • No. 2 CAN J/C

WIRING DIAGRAM

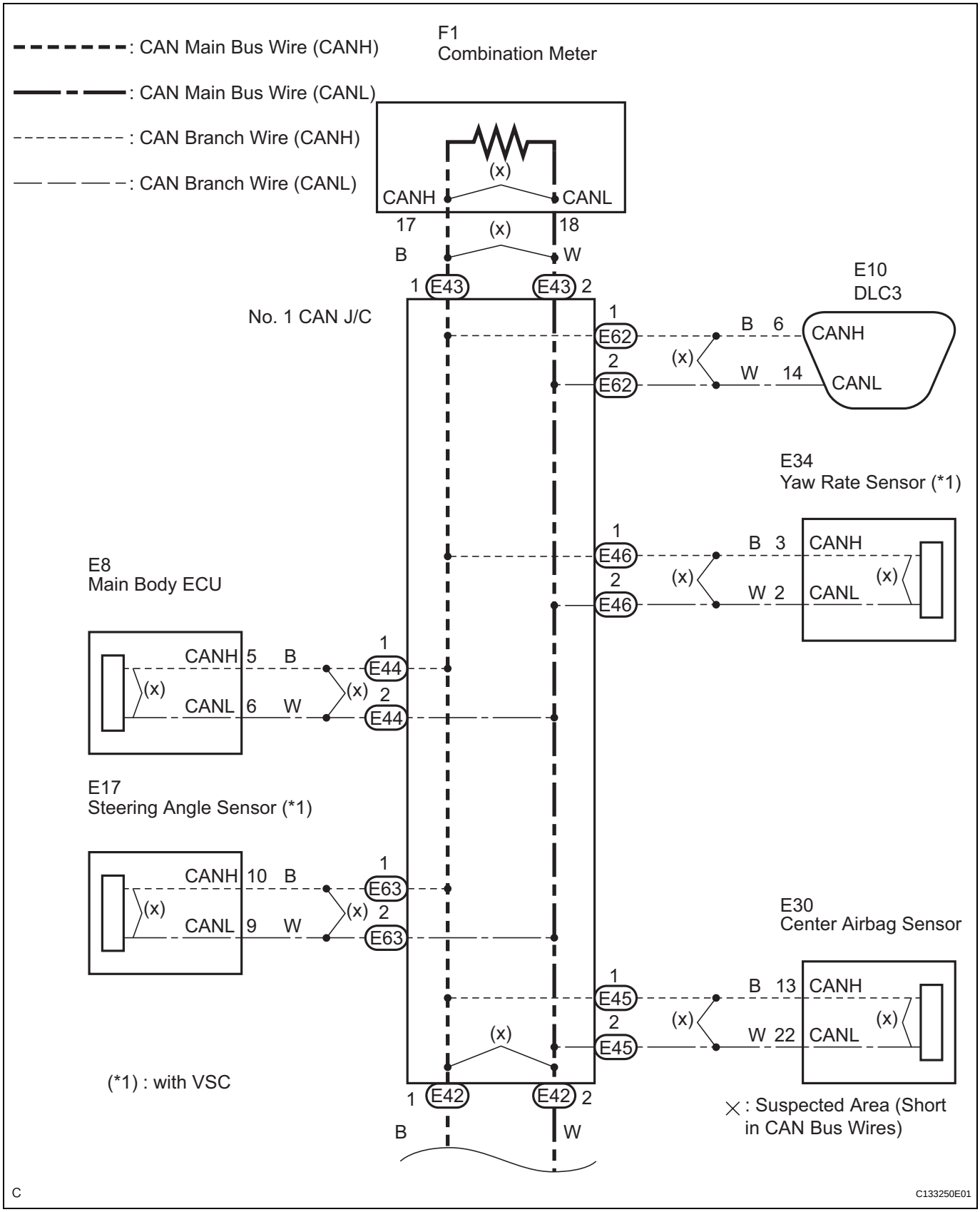

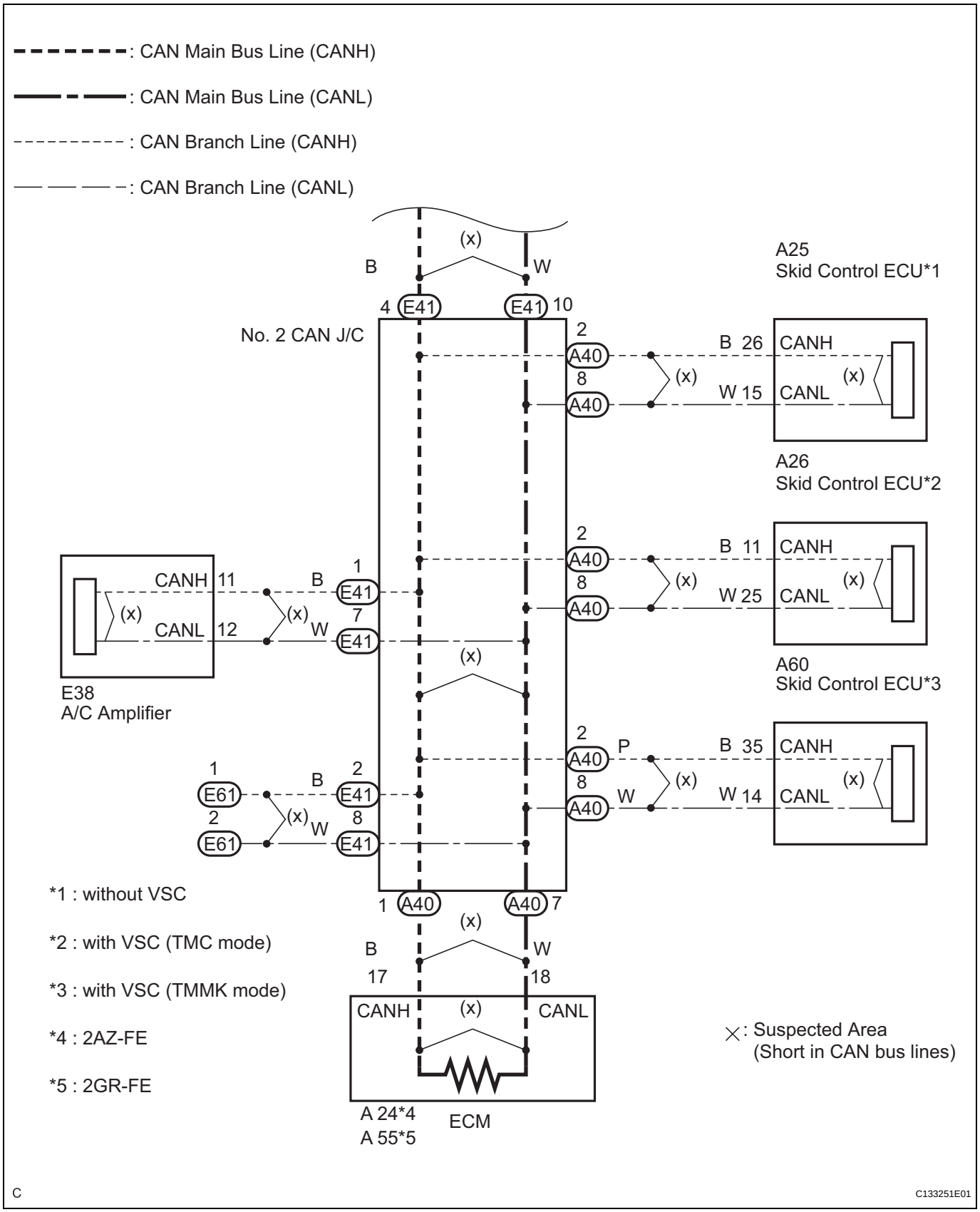

INSPECTION PROCEDURE

NOTICE:

- **Turn the ignition switch off before measuring the resistance of the CAN main wire and CAN branch wires.**

- **After the ignition switch is turned off, check that the key reminder warning system and light reminder warning system are not operating.**
- **Before measuring the resistance, leave the vehicle as is for at least 1 minute and do not operate the ignition switch, any other switches or the doors. If doors need to be opened in order to check connectors, open the doors and leave them open.**

HINT:
Operating the ignition switch, any other switches or any triggers related ECU and sensor communication on the CAN, which would cause resistance reading variations.

1	CHECK FOR SHORT IN CAN BUS WIRES (DLC3 BRANCH WIRE)

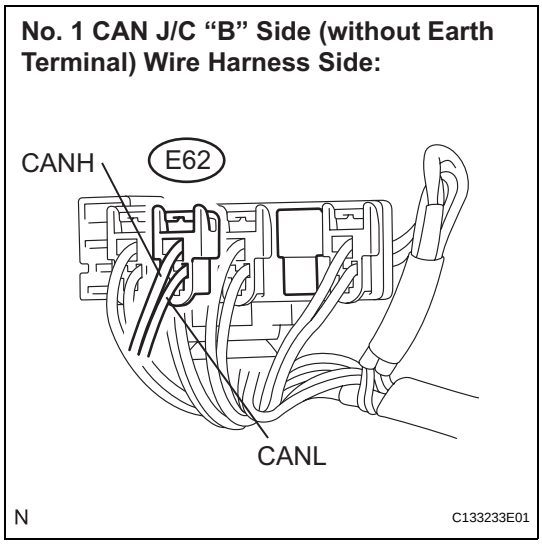

(a) Turn the ignition switch off.
(b) Disconnect the DLC3 branch wire gray connector (E62) from the No. 1 CAN J/C "B" side (without earth terminal).
NOTICE:
- **Before disconnecting the connector, make a note of where it is connected.**
- **Reconnect the connector to its original position.**

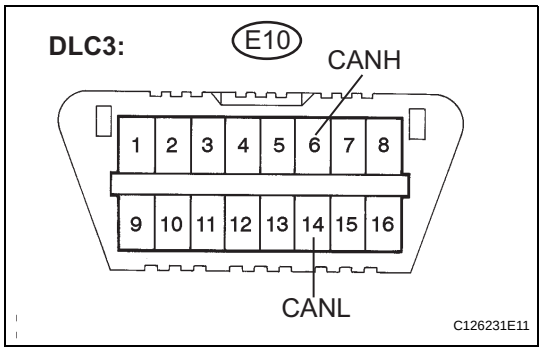

(c) Measure the resistance according to the value(s) in the table below.
Standard resistance

Tester Connection	Condition	Specified Value
E10-6 (CANH) - E10-14 (CANL)	Ignition switch off	1 MΩ or higher

(d) Reconnect the DLC3 branch wire connector (E62) to the No. 1 CAN J/C "B" side (without earth terminal).

NG → **REPAIR OR REPLACE DLC3 BRANCH WIRE OR CONNECTOR**

OK

CA

2 CHECK FOR SHORT IN CAN BUS WIRES (NO. 1 CAN J/C SIDE)

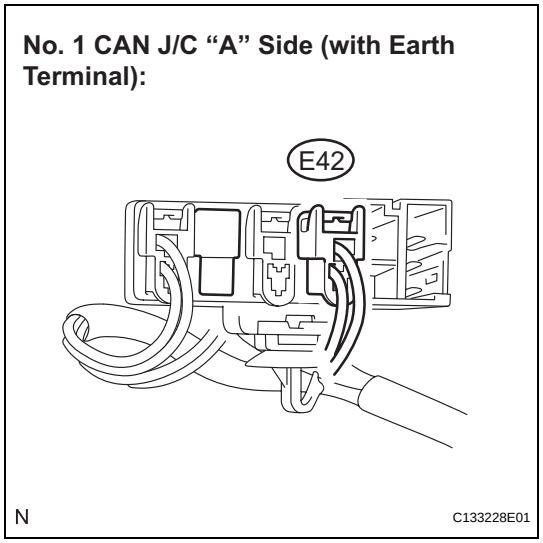

(a) Disconnect the CAN main bus wire white connector (E42) from the No. 1 CAN J/C "A" side (with earth terminal).

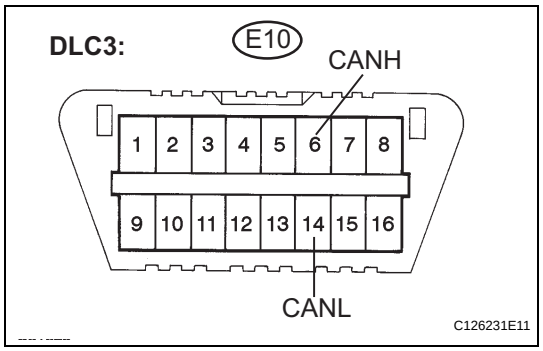

(b) Connect the probes of an ohmmeter to terminals 6 (CANH) and 14 (CANL) of the DLC3.

(c) Measure the resistance according to the value(s) in the table below.

Standard resistance

Tester Connection	Condition	Specified Value
E10-6 (CANH) - E10-14 (CANL)	Ignition switch off	108 to 132 Ω

OK → **Go to step 7**

NG

3 CHECK FOR SHORT IN CAN BUS WIRES (NO. 1 CAN J/C BRANCH WIRE)

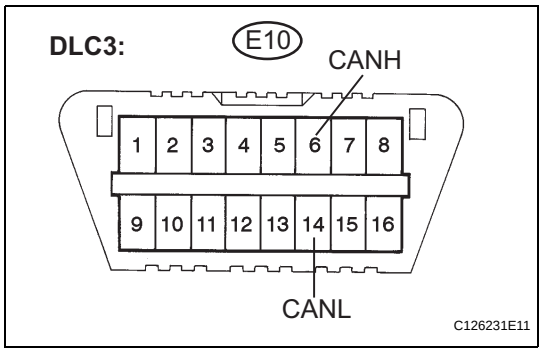

(a) Reconnect the CAN main bus wire connector (E42) to the No. 1 CAN J/C "A" side (with earth terminal).

(b) Connect the probes of an ohmmeter to terminals 6 (CANH) and 14 (CANL) of the DLC3.

(c) While observing the resistance value shown on the tester, disconnect connectors E44, E45, E46 and E63 from the No. 1 CAN J/C one by one until the resistance becomes normal (between 54 and 69 Ω).

HINT:

Disconnect the branch wire connectors other than those of the DLC3.

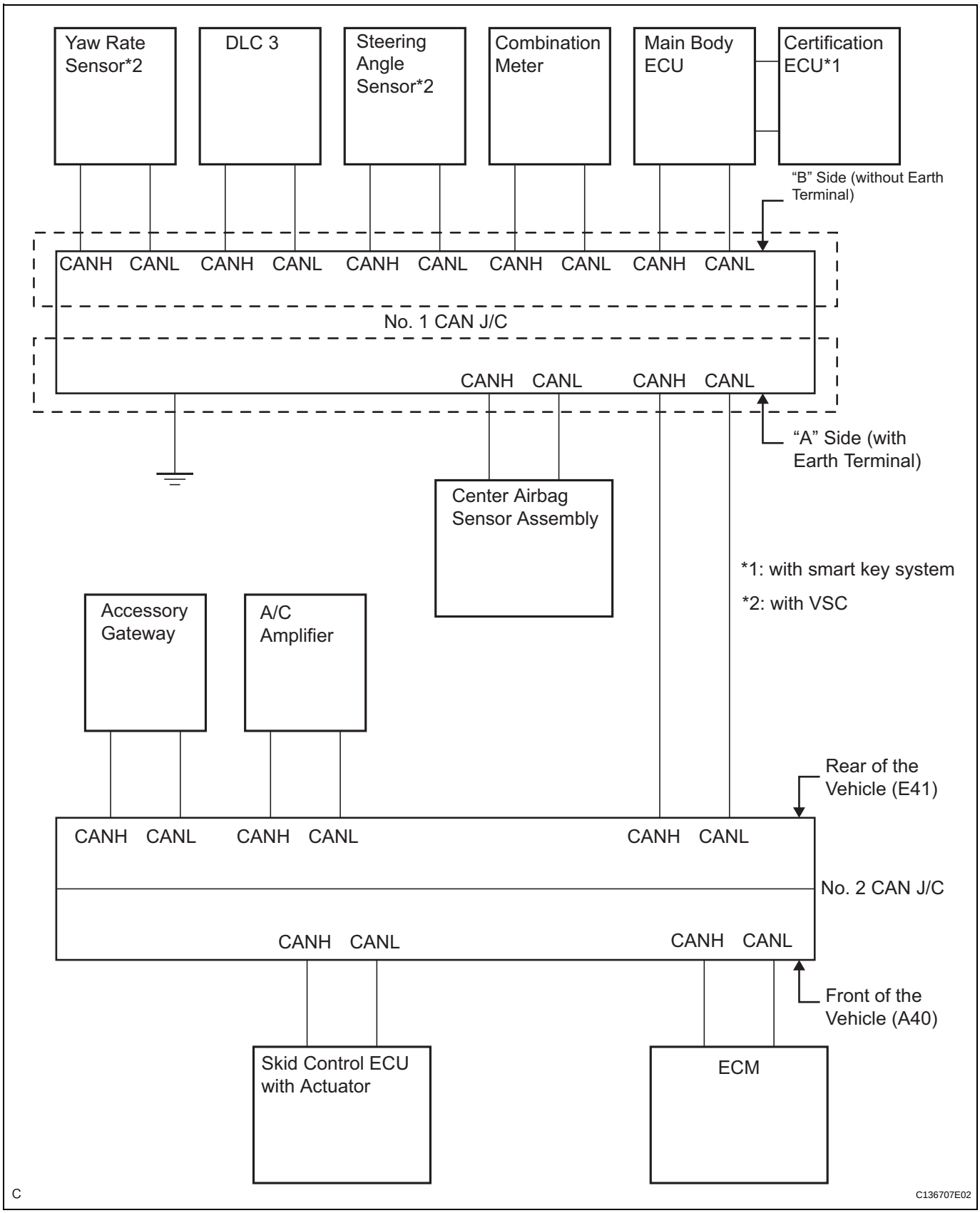
Yaw Rate Sensor*2
DLC 3
Steering Angle Sensor*2
Combination Meter
Main Body ECU
Certification ECU*1
"B" Side (without Earth Terminal)
CANH CANL CANH CANL CANH CANL CANH CANL CANH CANL
No. 1 CAN J/C
CANH CANL CANH CANL
"A" Side (with Earth Terminal)
Center Airbag Sensor Assembly
*1: with smart key system
*2: with VSC
Accessory Gateway
A/C Amplifier
Rear of the Vehicle (E41)
CANH CANL CANH CANL CANH CANL
No. 2 CAN J/C
CANH CANL CANH CANL
Front of the Vehicle (A40)
Skid Control ECU with Actuator
ECM
C
C136707E02

CA

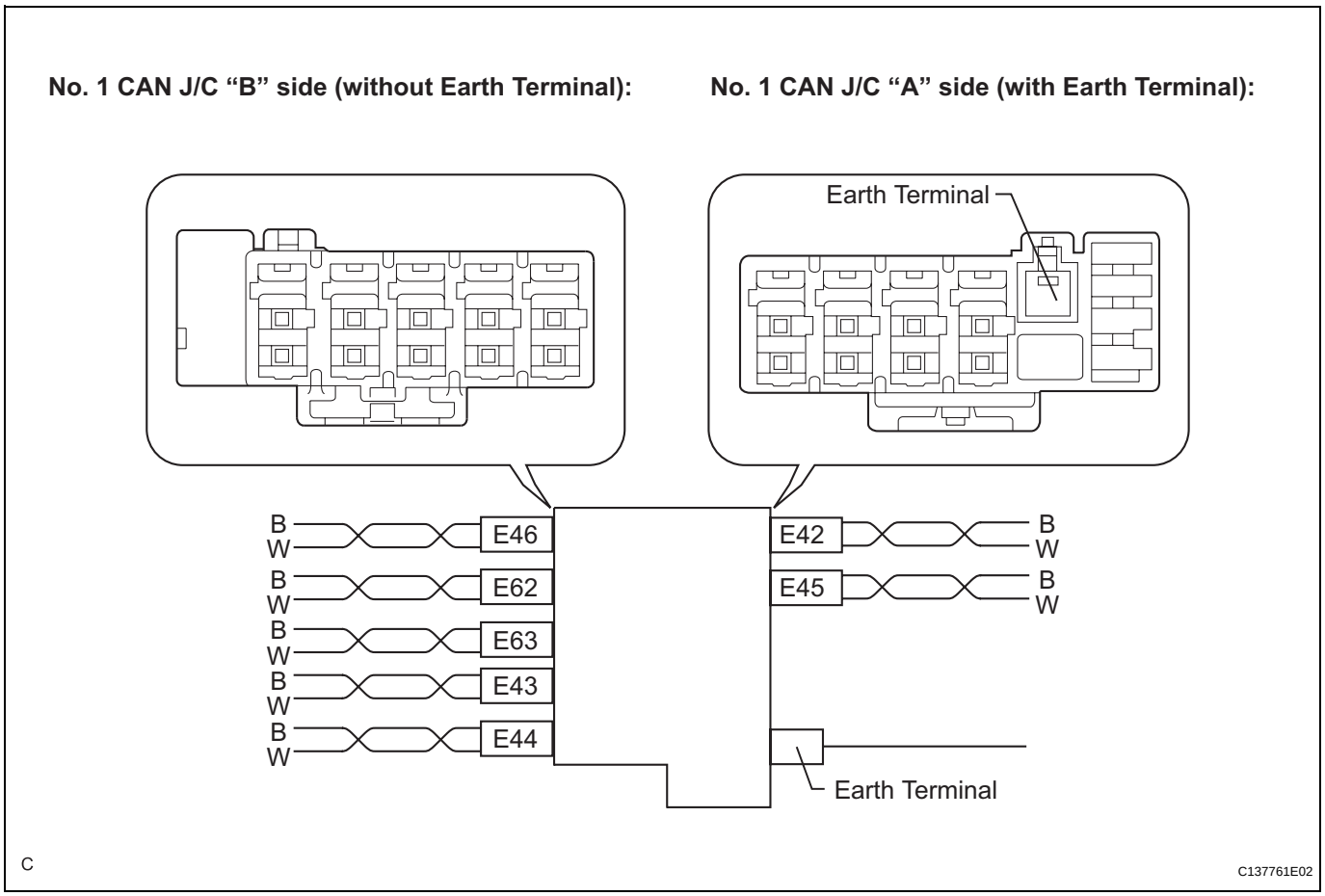

CAN J/C connectors ("A" side, with earth terminal)	Connector Color	Wire Color (CAN-H)	Wire Color (CAN-L)
Airbag Sensor Assembly Center (E45)	Black	B	W

CAN J/C connectors ("B" side, with earth terminal)	Connector Color	Wire Color (CAN-H)	Wire Color (CAN-L)
Yaw Rate Sensor* (E46)	Blue	B	W
Steering Angle Sensor* (E63)	Brown	B	W
Main Body ECU (E44)	Black	B	W

*: with VSC

NOTICE:

Do not reconnect the disconnected connectors until this inspection is complete because there may be a short in 2 or more branch wires.

Result

Symptom	Proceed to
The resistance is still below 54 Ω when all the specified connectors are disconnected. (There are no shorts in the branch wires.)	**A**
The resistance becomes normal (between 54 and 69 Ω) when a connector is disconnected. (There is a short in one or more of the branch wires.)	**B**

(d) When there is a short in one or more of the branch wires:

(1) Reconnect all of the connectors to the No. 1 CAN J/C, except for the one that was disconnected last (the short-circuited bus wire). Check that the resistance shown on the tester is normal (between 54 and 69 Ω) to confirm that there is a short in one branch wire only.

CA

HINT:
- The connectors connected to the No. 1 CAN J/C can be distinguished according to the color of the communication bus wires and the shape of the connectors.
- Reconnecting the connectors to non-specified positions on the No. 1 CAN J/C does not affect system operation. However, it is preferred to reconnect the connectors to their specified positions to avoid negative effects on the wiring such as tension on the wiring harnesses, and to make future maintenance easier.

B → **Go to step 15**

A

4 CHECK FOR SHORT IN CAN BUS WIRES (COMBINATION METER MAIN BUS WIRE)

CA

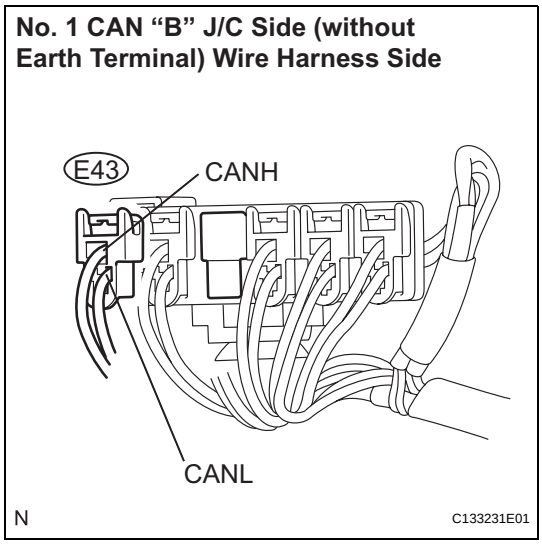

(a) Disconnect the combination meter main bus wire white connector (E43) from the No. 1 CAN J/C "B" side (without earth terminal).
NOTICE:
- **Before disconnecting the connector, make a note of where it is connected.**
- **Reconnect the connector to its original position.**

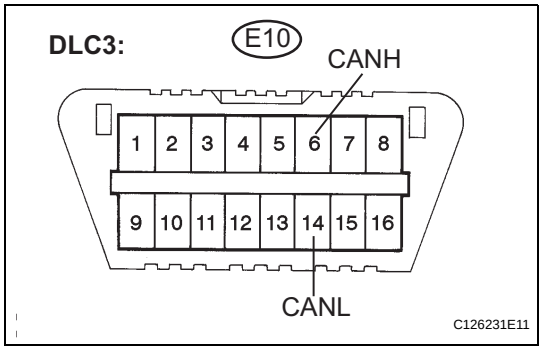

(b) Measure the resistance according to the value(s) in the table below.
Standard resistance

Tester Connection	Condition	Specified Value
E10-6 (CANH) - E10-14 (CANL)	Ignition switch off	108 to 132 Ω

NG → **REPLACE NO. 1 CAN J/C**

OK

5 RECONNECT CONNECTOR

(a) Reconnect the combination meter main bus wire connector (E43) to the No. 1 CAN J/C "B" side (without earth terminal).

NEXT

6 CHECK FOR SHORT IN CAN BUS WIRES (COMBINATION METER)

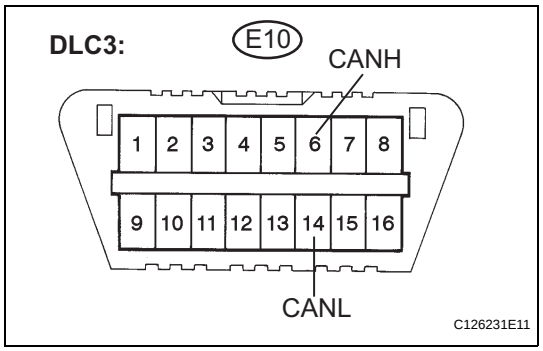

(a) Disconnect the combination meter connector (F1).
(b) Measure the resistance according to the value(s) in the table below.

Standard resistance

Tester Connection	Condition	Specified Value
E10-6 (CANH) - E10-14 (CANL)	Ignition switch off	108 to 132 Ω

HINT:
If the resistance changes to 108 to 132 Ω when the connector is disconnected, there may be a short in the Combination meter.

NG → **REPAIR OR REPLACE CAN BUS MAIN WIRE (COMBINATION METER MAIN BUS WIRE)**

OK

REPLACE COMBINATION METER

7 CHECK FOR SHORT IN CAN BUS WIRES (NO. 2 CAN - NO. 1 CAN J/C)

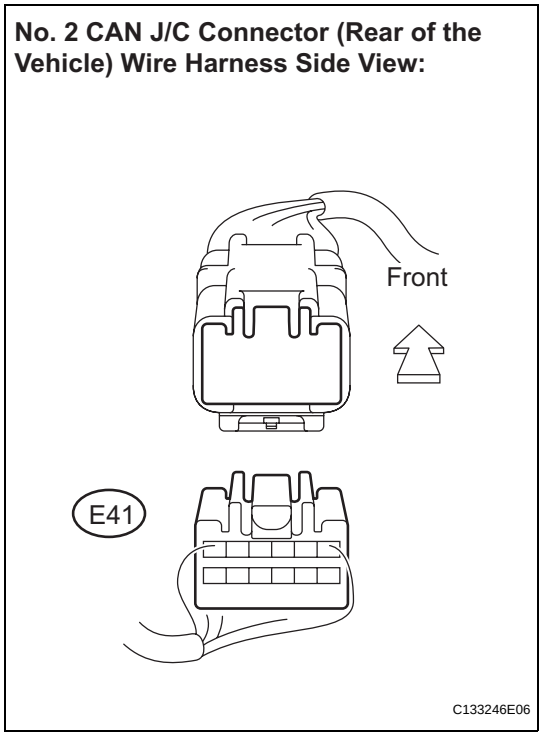

(a) Reconnect the No. 1 CAN J/C connector (E42).
(b) Disconnect the No. 2 CAN J/C connector (E41).

CA

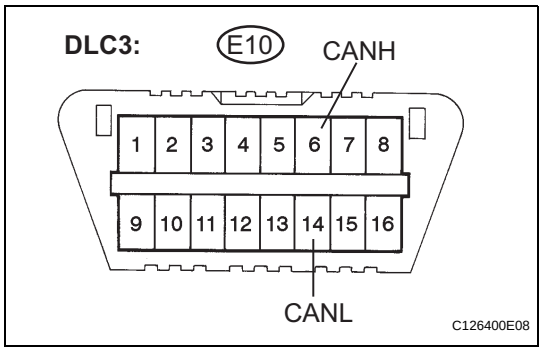

(c) Measure the resistance according to the value(s) in the table below.

Standard resistance

Tester Connection	Condition	Specified Value
E10-6 (CANH) - E10-14 (CANL)	Ignition switch off	108 to 132 Ω

NG → **REPAIR OR REPLACE CAN BUS MAIN WIRE OR CONNECTOR (NO. 1 CAN J/C - NO. 2 CAN J/C)**

OK

8 CHECK FOR SHORT IN CAN BUS WIRES (NO. 1 CAN J/C - NO. 2 CAN J/C)

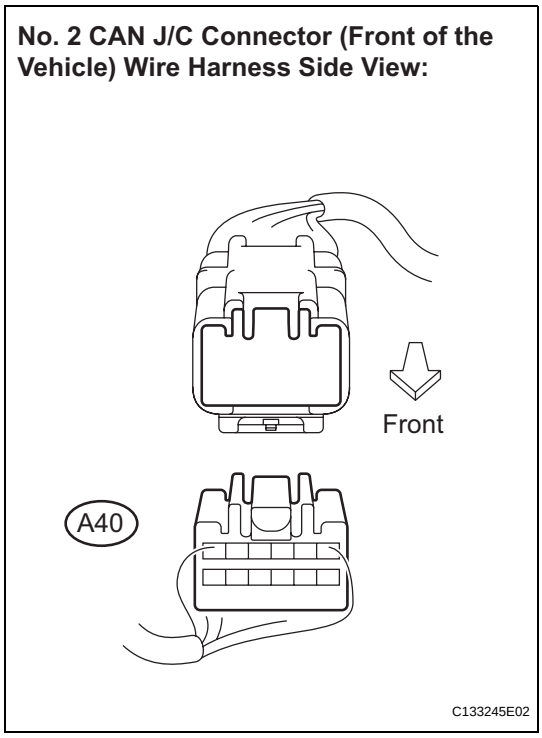

(a) Reconnect the No. 2 CAN J/C connector (E41) (rear of the vehicle).

(b) Disconnect the No. 2 CAN J/C connector (A40) (front of the vehicle).

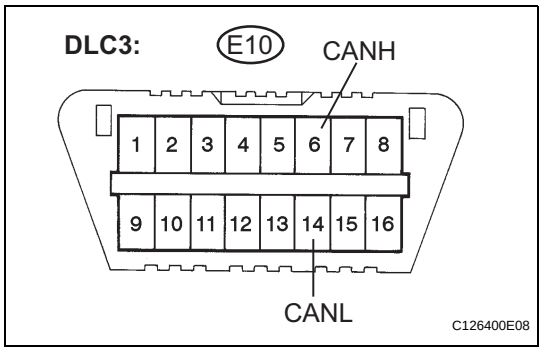

(c) Measure the resistance according to the value(s) in the table below.

Standard resistance

Tester Connection	Condition	Specified Value
E10-6 (CANH) - E10-14 (CANL)	Ignition switch off	108 to 132 Ω

OK → **Go to step 12**

NG

CA

9 CHECK FOR SHORT IN CAN BUS WIRES (A/C AMPLIFIER BRANCH WIRE)

No. 2 CAN J/C Connector (Rear of the Vehicle) Wire Harness Side View:

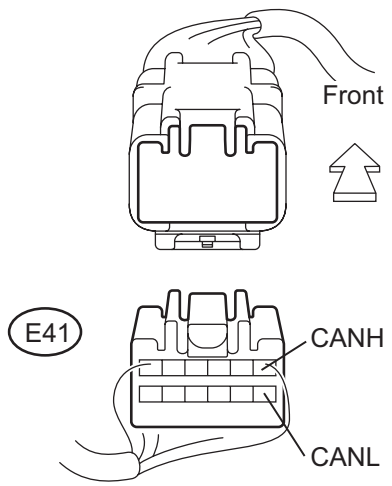

C133246E05

(a) Reconnect the No. 2 CAN J/C connector (A40) (front of the vehicle).
(b) Disconnect the No. 2 CAN J/C connector (E41) (rear of the vehicle).
(c) Measure the resistance according to the value(s) in the table below.

Standard resistance

Tester Connection	Condition	Specified Value
E41-1 (CANH) - E41-7 (CANL)	Ignition switch off	1 MΩ or higher

NG → **Go to step 11**

OK

10 CHECK FOR SHORT IN CAN BUS WIRES (ACCESSORY GATEWAY BRANCH WIRE)

No. 2 CAN J/C Connector (Rear of the Vehicle) Wire Harness Side View:

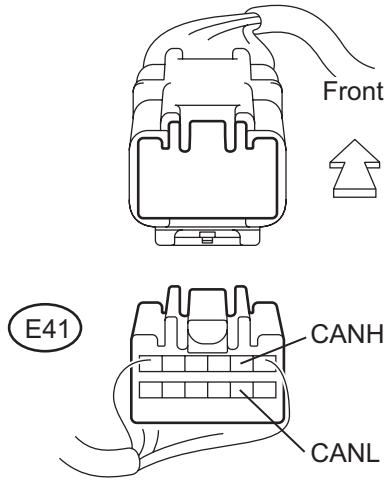

C133246E03

(a) Disconnect the No. 2 CAN J/C connector (E41) (rear of the vehicle).
(b) Measure the resistance according to the value(s) in the table below.

Standard resistance

Tester Connection	Condition	Specified Value
E41-2 (CANH) - E41-8 (CANL)	Ignition switch off	1 MΩ or higher

NG → **REPAIR OR REPLACE ACCESSORY GATEWAY BRANCH WIRE OR CONNECTOR**

OK

REPLACE NO. 2 CAN J/C

11 CHECK FOR SHORT IN CAN BUS WIRES (A/C AMPLIFIER - NO. 2 CAN J/C)

No. 2 CAN J/C Connector (Rear of the Vehicle) Wire Harness Side View:

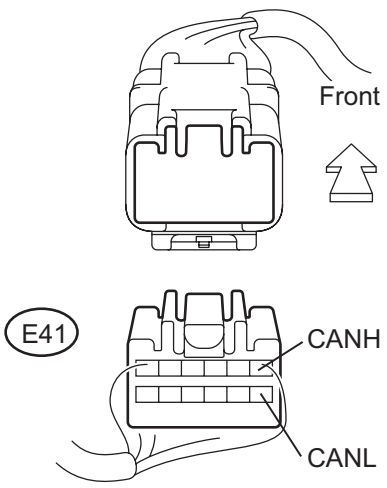

C133246E05

(a) Disconnect the A/C amplifier connector (E38).
(b) Measure the resistance according to the value(s) in the table below.

Standard resistance

Tester Connection	Condition	Specified Value
E41-1 (CANH) - E41-7 (CANL)	Ignition switch off	1 MΩ or higher

NG → **REPAIR OR REPLACE A/C AMPLIFIER BRANCH WIRE OR CONNECTOR**

OK

REPLACE A/C AMPLIFIER

CA

12 CHECK FOR SHORT IN CAN BUS WIRES (ECM MAIN BUS WIRE)

No. 2 CAN J/C Connector (Front of the Vehicle) Wire Harness Side View:

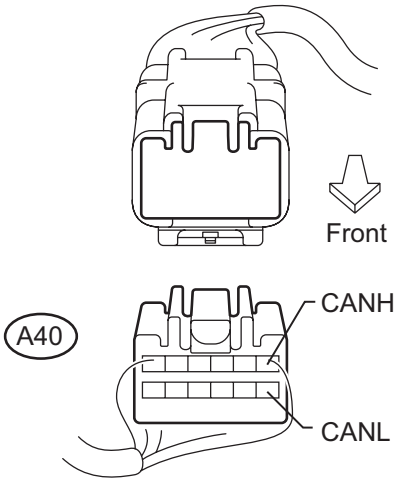

C133245E04

(a) Disconnect the No. 2 CAN J/C connector (A40).
(b) Measure the resistance according to the value(s) in the table below.

Standard resistance

Tester Connection	Condition	Specified Value
A40-1 (CANH) - A40-7 (CANL)	Ignition switch off	108 to 132 Ω

NG → **Go to step 14**

OK

13 CHECK FOR SHORT IN CAN BUS WIRES (SKID CONTROL ECU - NO. 2 CAN J/C)

No. 2 CAN J/C Connector (Front of the Vehicle) Wire Harness Side View:

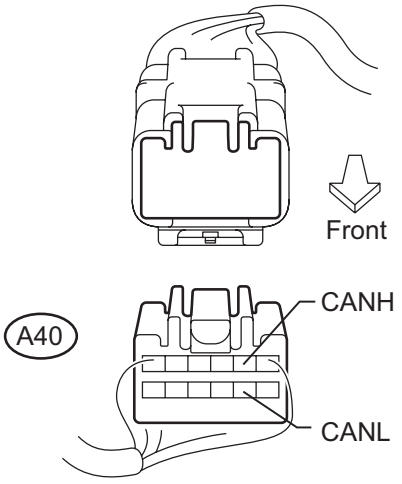

C133245E05

(a) Disconnect the skid control ECU connector (A25, A26 or A60).
(b) Measure the resistance according to the value(s) in the table below.

Standard resistance

Tester Connection	Condition	Specified Value
A40-2 (CANH) - A40-8 (CANL)	Ignition switch off	1 MΩ or higher

HINT:
Measure the resistance with the No. 2 CAN J/C connector (A40) disconnected.

OK → **REPLACE BRAKE ACTUATOR ASSEMBLY**

CA

NG

REPAIR OR REPLACE SKID CONTROL ECU BRANCH WIRE OR CONNECTOR

14 CHECK FOR SHORT IN CAN BUS WIRES (ECM MAIN BUS WIRE)

No. 2 CAN J/C Connector (Front of the Vehicle) Wire Harness Side View:

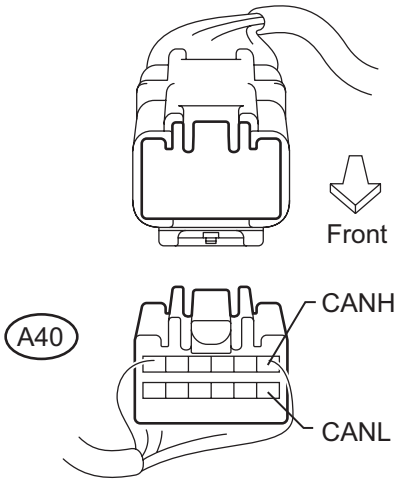

C133245E04

(a) Disconnect the ECM connector (A24 or A55).
(b) Measure the resistance according to the value(s) in the table below.

Standard resistance

Tester Connection	Condition	Specified Value
A40-1 (CANH) - A40-7 (CANL)	Ignition switch off	1 MΩ or higher

HINT:
Measure the resistance with the No. 2 CAN J/C connector (A40) disconnected.

NG → **REPAIR OR REPLACE CAN BUS MAIN WIRE OR CONNECTOR (ECM - NO. 2 CAN J/C)**

OK

REPLACE ECM

15 RECONNECT CONNECTOR

(a) Reconnect the connector for the short-circuited branch wire to the No. 1 CAN J/C (the connector that caused the bus wire resistance to become normal (between 54 and 69 Ω) when it was disconnected).

NEXT

CA

16 CHECK FOR SHORT IN CAN BUS WIRES

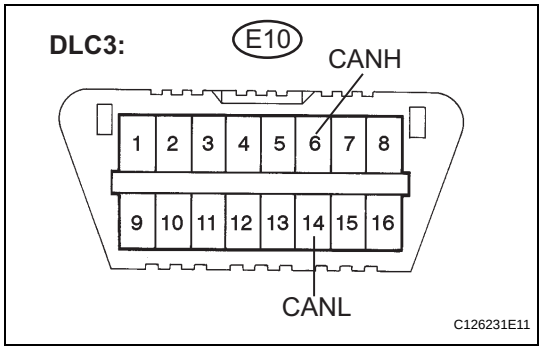

(a) Disconnect the connector that includes terminals CANH and CANL from the ECU (or sensor) to which the short-circuited branch wire is connected. (See page CA-10)

(b) Measure the resistance according to the value(s) in the table below.

Standard resistance

Tester Connection	Condition	Specified Value
E10-6 (CANH) - E10-14 (CANL)	Ignition switch off	54 to 69 Ω

HINT:
If the resistance becomes normal (between 54 and 69 Ω) when the connector is disconnected from the ECU (or sensor), there may be a short in the ECU (or sensor).

NG → **REPAIR OR REPLACE CORRESPONDING ECU OR SENSOR BRANCH WIRE OR CONNECTOR**

CA

OK

REPLACE CORRESPONDING ECU OR SENSOR

Short to B+ in CAN Bus Line

DESCRIPTION

A short to B+ is suspected in the CAN bus wire when the resistance between terminals 6 (CANH) and 16 (BAT), or terminals 14 (CANL) and 16 (BAT) of the DLC3 is below 6 kΩ.

Symptom	Trouble Area
The resistance between terminals 6 (CANH) and 16 (BAT), or terminals 14 (CANL) and 16 (BAT) of the DLC3 is below 6 kΩ.	• Short to B+ in CAN bus wire • Brake actuator assembly (Skid control ECU) • Steering angle sensor • Yaw rate sensor • ECM • Combination meter • Main body ECU • A/C amplifier • Center airbag sensor • No. 1 CAN J/C

WIRING DIAGRAM

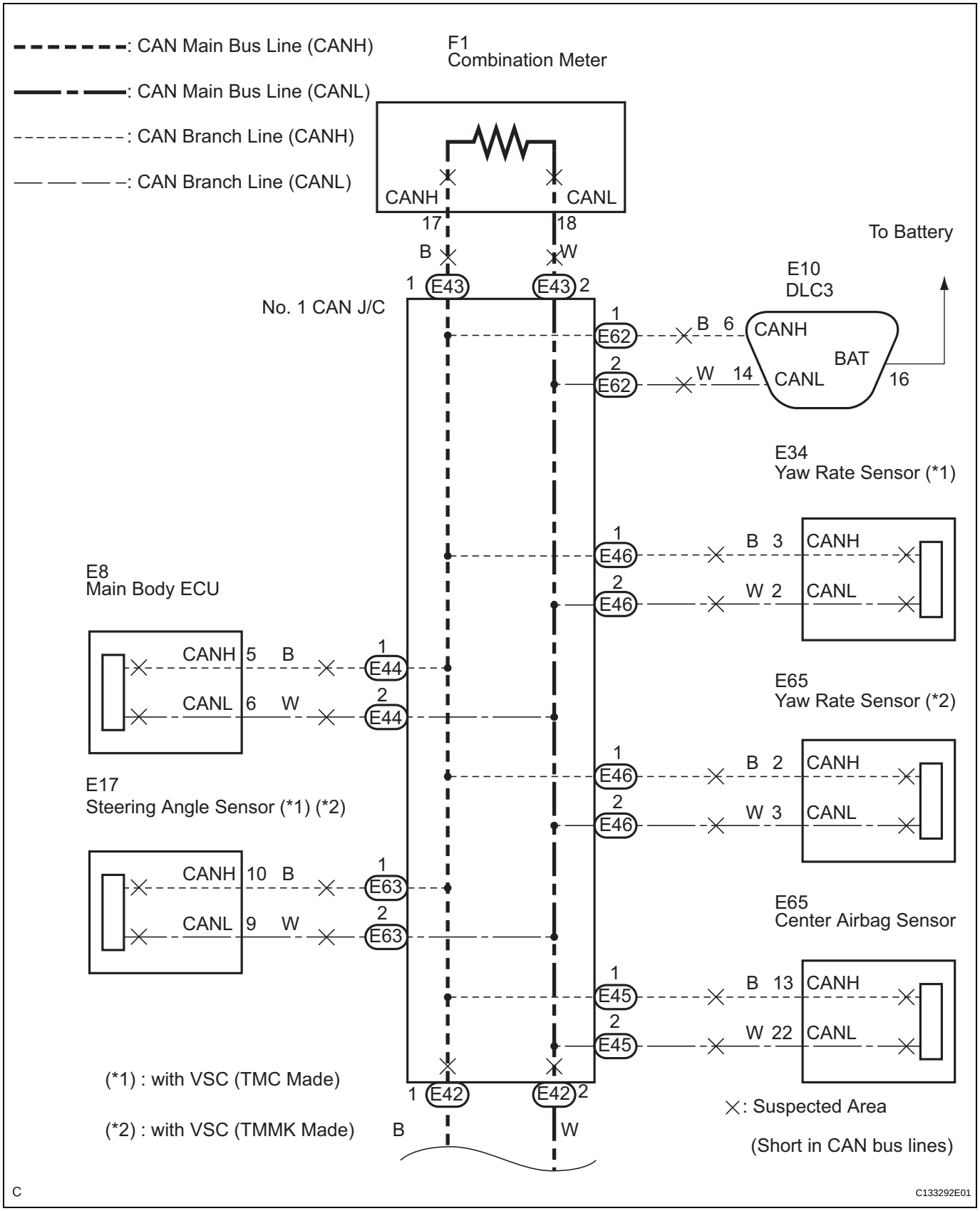

CA

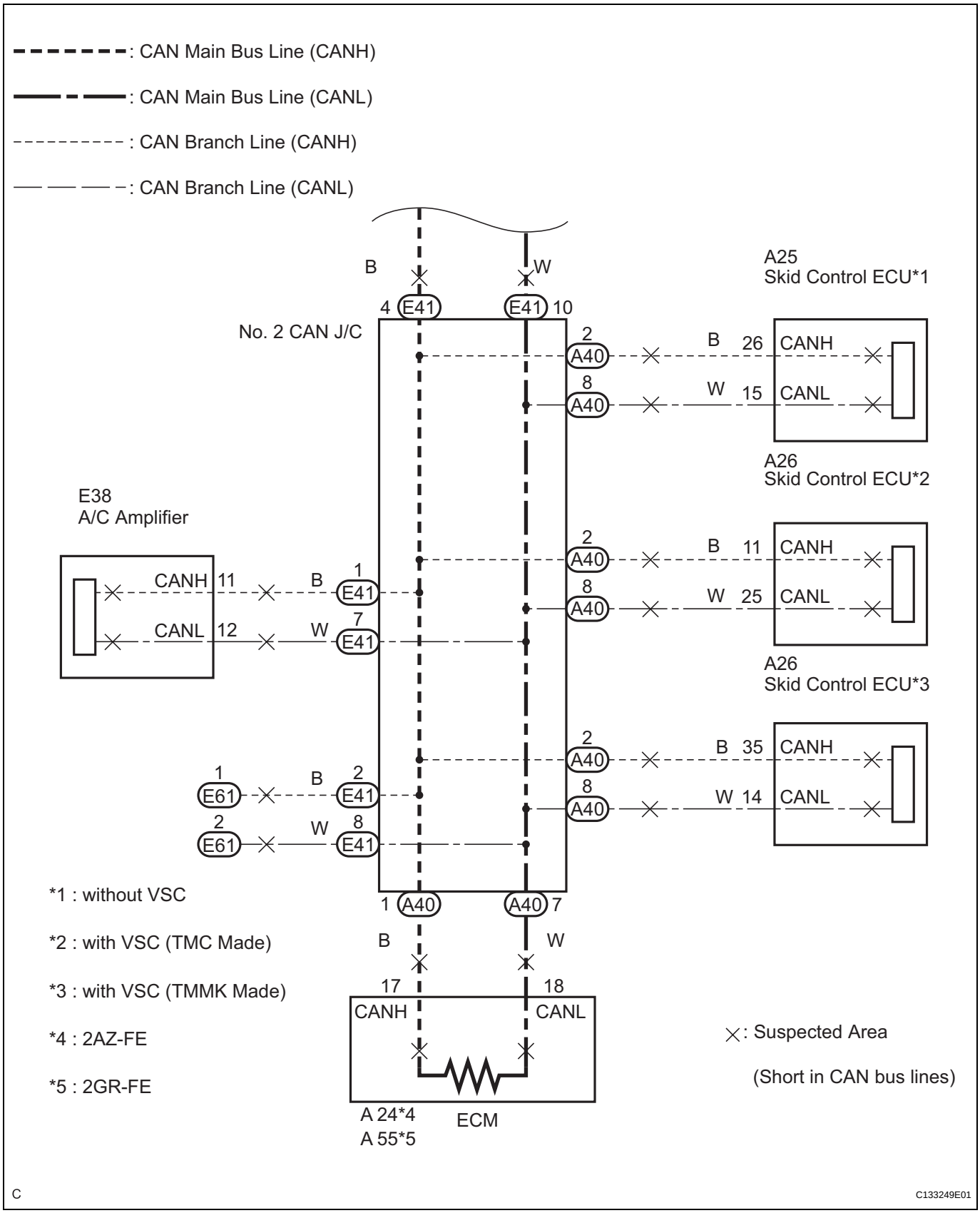

INSPECTION PROCEDURE

NOTICE:

- **Turn the ignition switch off before measuring the resistance of the CAN main wire and CAN branch wires.**

- **After the ignition switch is turned off, check that the key reminder warning system and light reminder warning system are not operating.**
- **Before measuring the resistance, leave the vehicle as is for at least 1 minute and do not operate the ignition switch, any other switches or the doors. If doors need to be opened in order to check connectors, open the doors and leave them open.**

HINT:
Operating the ignition switch, any other switches or any triggers related ECU and sensor communication on the CAN, which would cause resistance reading variations.

1 CHECK FOR SHORT TO B+ IN CAN BUS WIRE (DLC3 BRANCH WIRE)

No. 1 CAN J/C "B" Side (without Earth Terminal) Wire Harness Side:

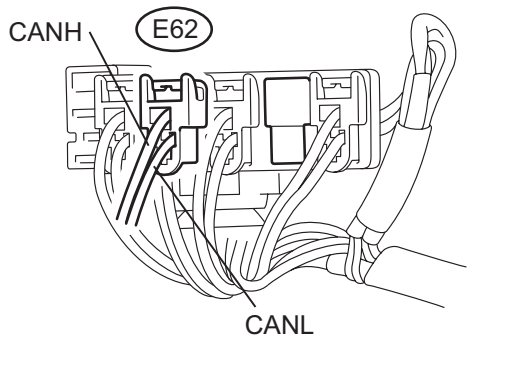

(a) Turn the ignition switch off.
(b) Disconnect the DLC3 branch wire gray connector (E62) from the No. 1 CAN J/C "B" side (without earth terminal).
NOTICE:
- **Before disconnecting the connector, make a note of where it is connected.**
- **Reconnect the connector to its original position.**

DLC3:

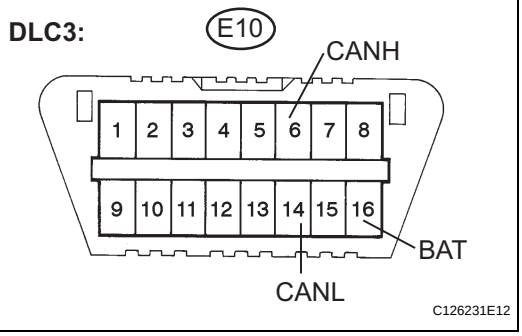

(c) Measure the resistance according to the value(s) in the table below.
Standard resistance

Tester Connection	Condition	Specified Value
E10-6 (CANH) - E10-16 (BAT)	Ignition switch off	6 kΩ or higher
E10-14 (CANL) - E10-16 (BAT)	Ignition switch off	6 kΩ or higher

(d) Reconnect the DLC3 branch wire connector (E62) to the No. 1 CAN J/C "B" side (without earth terminal).

NG → **REPAIR OR REPLACE DLC3 BRANCH WIRE OR CONNECTOR**

OK

CA

2 CHECK FOR SHORT TO B+ IN CAN BUS WIRE (NO. 1 CAN J/C SIDE)

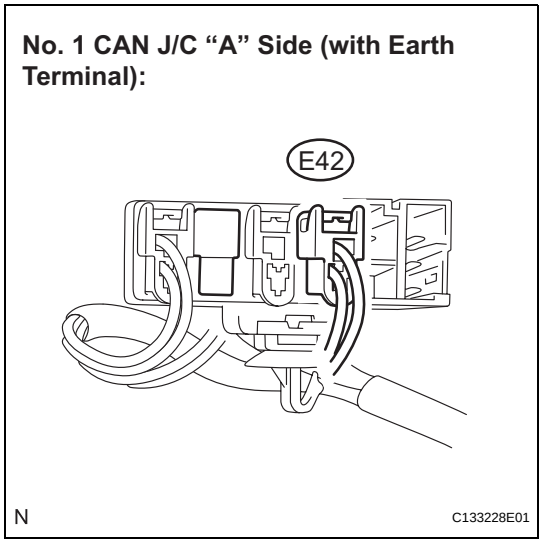

(a) Disconnect the CAN main bus wire white connector (E42) from the No. 1 CAN J/C "A" side (with earth terminal).

CA

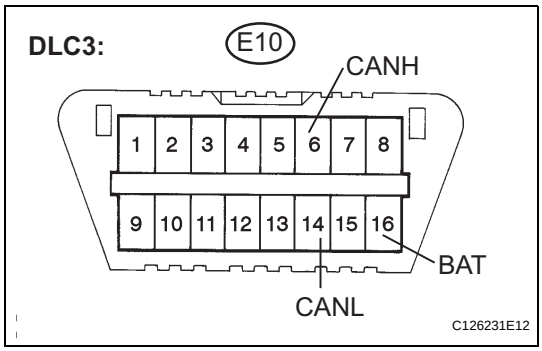

(b) Measure the resistance between terminals 6 (CANH) and 16 (BAT), and between terminals 14 (CANL) and 16 (BAT) of the DLC3 each time a connector is disconnected.

Standard resistance

Tester Connection	Condition	Specified Value
E10-6 (CANH) - E10-16 (BAT)	Ignition switch off	6 kΩ or higher
E10-14 (CANL) - E10-16 (BAT)	Ignition switch off	6 kΩ or higher

OK → **Go to step 6**

NG

3 CHECK FOR SHORT TO B+ IN CAN BUS WIRE

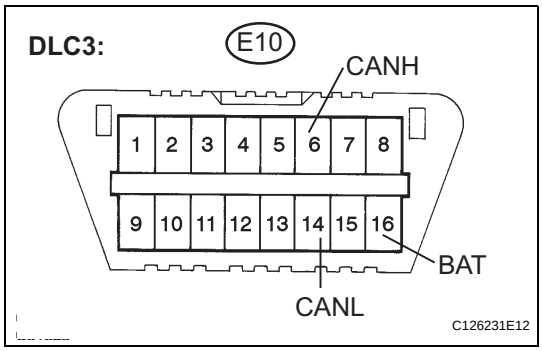

(a) Disconnect connectors from the No. 1 CAN J/C one at a time.
HINT:
Disconnect the ECU and sensor connectors other than the DLC3 branch wires and CAN main bus wires between the No. 1 CAN J/C.

(b) Measure the resistance between terminals 6 (CANH) and 16 (BAT), and between terminals 14 (CANL) and 16 (BAT) of the DLC3 each time a connector is disconnected.

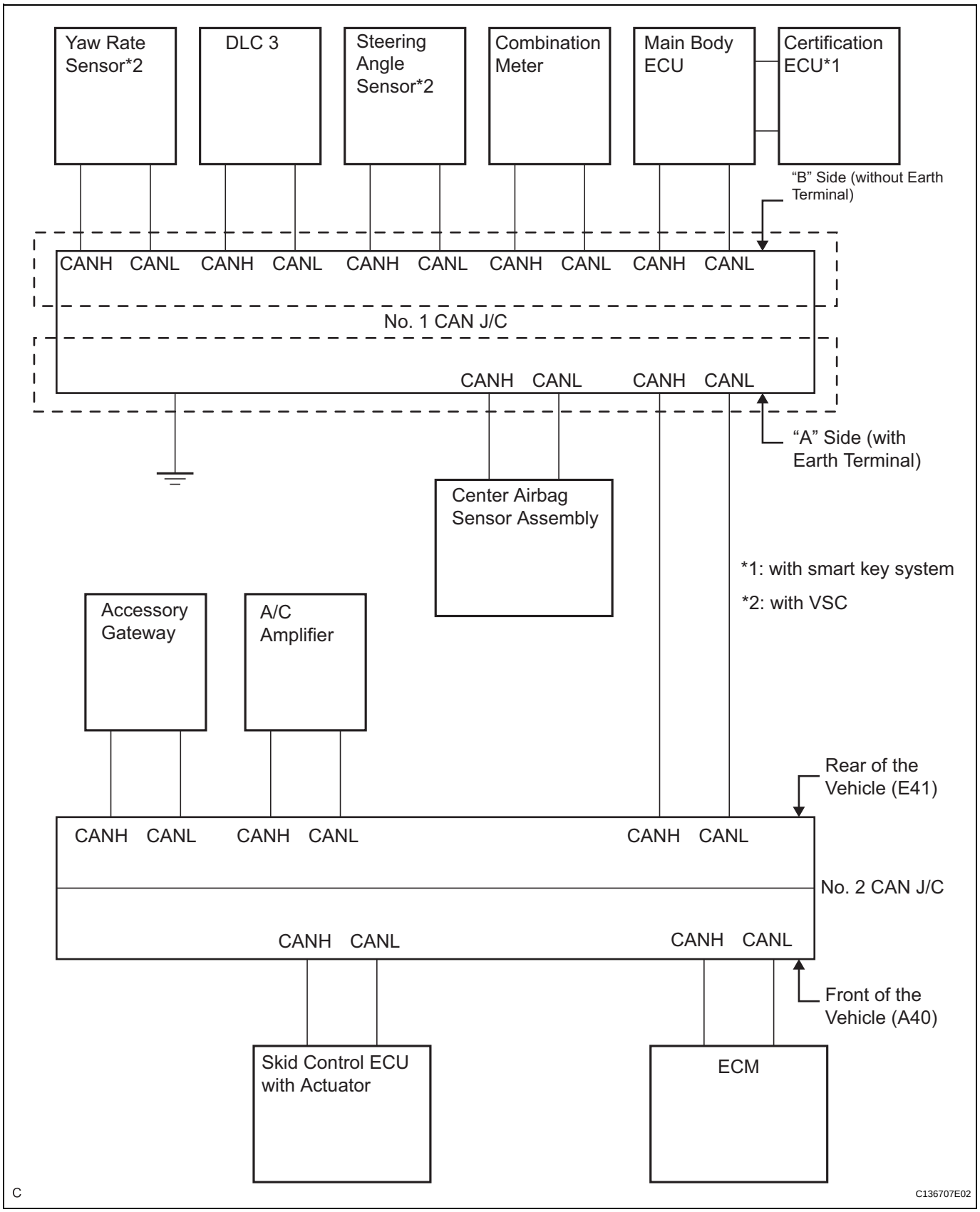
Yaw Rate Sensor*2
DLC 3
Steering Angle Sensor*2
Combination Meter
Main Body ECU
Certification ECU*1
"B" Side (without Earth Terminal)
CANH CANL CANH CANL CANH CANL CANH CANL CANH CANL
No. 1 CAN J/C
CANH CANL CANH CANL
"A" Side (with Earth Terminal)
Center Airbag Sensor Assembly
*1: with smart key system
*2: with VSC
Accessory Gateway
A/C Amplifier
Rear of the Vehicle (E41)
CANH CANL CANH CANL CANH CANL
No. 2 CAN J/C
CANH CANL CANH CANL
Front of the Vehicle (A40)
Skid Control ECU with Actuator
ECM
C
C136707E02

CA

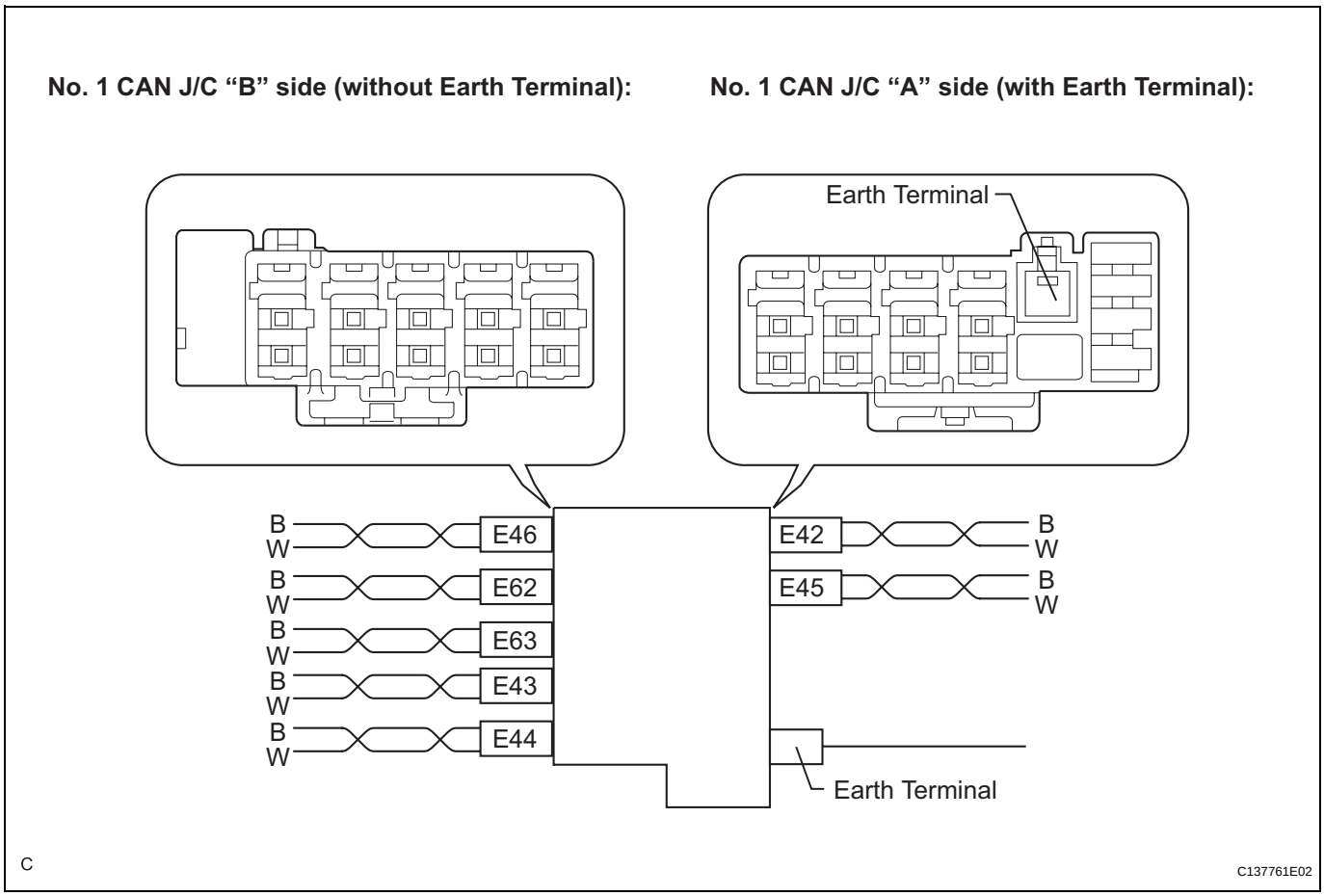

No. 1 CAN J/C connectors ("A" side, with earth terminal)	Connector Color	Wire Color (CAN-H)	Wire Color (CAN-L)
Airbag Sensor Assembly Center (E45)	Black	B	W

No. 1 CAN J/C connectors ("A" side, with earth terminal)	Connector Color	Wire Color (CAN-H)	Wire Color (CAN-L)
Yaw Rate Sensor* (E46)	Blue	B	W
Steering Angle Sensor* (E63)	Brown	B	W
Combination Meter (E43)	White	B	W
Main Body ECU (E44)	Black	B	W

*: with VSC

NOTICE:

Do not reconnect the disconnected connectors until this inspection is complete because there may be a short to B+ in 2 or more CAN bus wires.

Result

Symptom	Proceed to
The resistance between terminals 6 (CANH) and 16 (BAT), or the resistance between 14 (CANL) and 16 (BAT) is still below 6 kΩ when all the specified connectors are disconnected from the No. 1 CAN J/C. (There is a short to B+ in the CAN main bus wires between the No. 1 CAN J/C and No. 2 CAN J/C.)	**OK**
The resistance between terminals 6 (CANH) and 16 (BAT), or the resistance between 14 (CANL) and 16 (BAT) becomes normal (6 kΩ or more) when a connector is disconnected from the No. 1 CAN J/C. (There is a short to B+ in one of the areas that relate to one or more of the disconnected bus wires.)	**NG**

(c) When there is a short to B+ in one or more of the bus wires that connect to an ECU (or sensor):

(1) Reconnect all of the connectors to the No. 1 CAN J/C, except for the one that was disconnected last (the bus wire that is shorted to B+). Check that the resistance shown on the tester is normal (6 kΩ or more) to confirm that there is a short to B+ in one bus wire only.
HINT:
- The connectors connected to the No. 1 CAN J/C can be distinguished according to the color of the communication bus wires and the shape of the connectors.
- Reconnecting the connectors to non-specified positions on the No. 1 CAN J/C does not affect system operation. However, it is preferred to reconnect the connectors to their specified positions to avoid negative effects on the wiring such as tension on the wiring harnesses, and to make future maintenance easier.

OK → **REPLACE NO. 1 CAN J/C**

CA

NG

4 RECONNECT CONNECTOR

(a) Reconnect the connector of the bus wire that is shorted to B+ to the No. 1 CAN J/C (the connector that caused the bus wire resistance to change to 6 kΩ or more when it was disconnected).

NEXT

5 CHECK FOR SHORT TO B+ IN CAN BUS WIRE

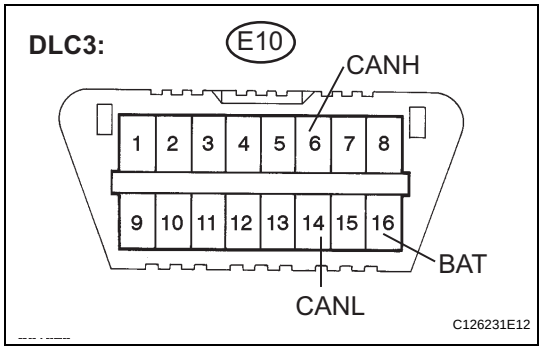

(a) Disconnect the connector that includes terminals CANH and CANL from the ECU (or sensor) to which the bus wire shorted to B+ is connected. (See page CA-10)
(b) Measure the resistance according to the value(s) in the table below.
Standard resistance

Tester Connection	Condition	Specified Value
E10-6 (CANH) - E10-16 (BAT)	Ignition switch off	6 kΩ or higher
E10-14 (CANL) - E10-16 (BAT)	Ignition switch off	6 kΩ or higher

HINT:
If the resistance changes to 6 kΩ or higher when the connector is disconnected from the ECU (or sensor), there may be a short in the ECU (or sensor).

NG → **REPAIR OR REPLACE CORRESPONDING ECU OR SENSOR BUS LINE OR CONNECTOR**

OK

REPLACE CORRESPONDING ECU OR SENSOR

6 CHECK FOR SHORT TO B+ IN CAN BUS WIRE

No. 2 CAN J/C Connector (Front of the Vehicle) Wire Harness Side View:

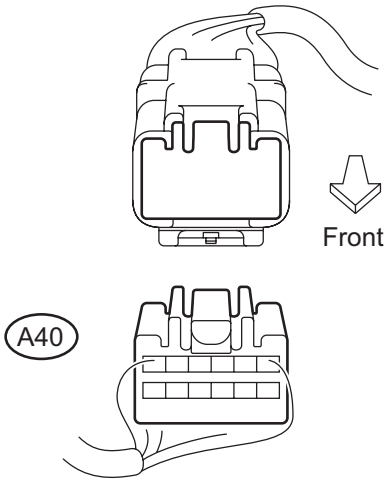

C133245E02

(a) Reconnect the CAN main bus wire connector (E42) to the No. 1 CAN J/C "A" side (with earth terminal).
(b) Disconnect the No. 2 CAN J/C connector (A40) (front of the vehicle).

DLC3:

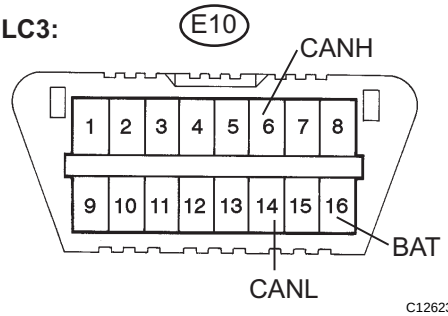

C126231E12

(c) Measure the resistance according to the value(s) in the table below.
Standard resistance

Tester Connection	Condition	Specified Value
E10-6 (CANH) - E10-16 (BAT)	Ignition switch off	6 kΩ or higher
E10-14 (CANL) - E10-16 (BAT)	Ignition switch off	6 kΩ or higher

OK → **Go to step 11**

NG

CA

7	CHECK FOR SHORT TO B+ IN CAN BUS WIRE (NO. 1 CAN J/C - NO. 2 CAN J/C)

No. 2 CAN J/C Connector (Rear of the Vehicle) Wire Harness Side View:

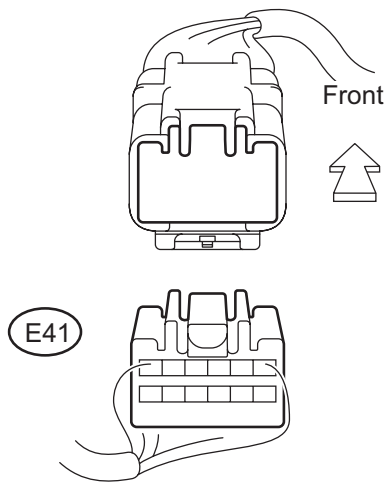

C133246E06

(a) Disconnect the No. 2 CAN J/C connector (E41) (rear of the vehicle).

DLC3:

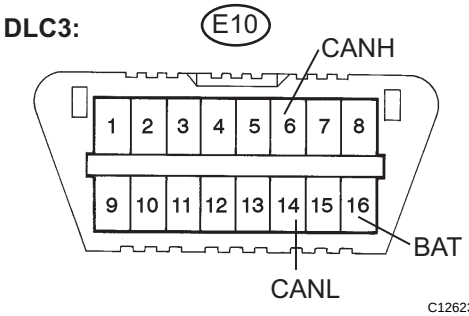

C126231E12

(b) Measure the resistance according to the value(s) in the table below.

Standard resistance

Tester Connection	Condition	Specified Value
E10-6 (CANH) - E10-16 (BAT)	Ignition switch off	6 kΩ or higher
E10-14 (CANL) - E10-16 (BAT)	Ignition switch off	6 kΩ or higher

HINT:
Measure the resistance with the No. 2 CAN J/C connector (A40) disconnected.

NG → **REPAIR OR REPLACE CAN BUS MAIN WIRE (NO. 1 CAN J/C - NO. 2 CAN J/C)**

OK

8	RECONNECT CONNECTOR

(a) Reconnect the No. 2 CAN J/C connector (A40) (front of the vehicle).

NEXT

CA

9	CHECK FOR SHORT TO B+ IN CAN BUS WIRE (A/C AMPLIFIER BRANCH WIRE)

No. 2 CAN J/C Connector (Rear of the Vehicle) Wire Harness Side View:

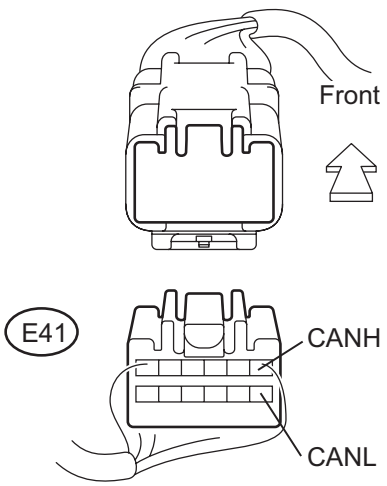

C133246E05

(a) Disconnect the No. 2 CAN J/C connector (E41) (rear of the vehicle).

DLC3:

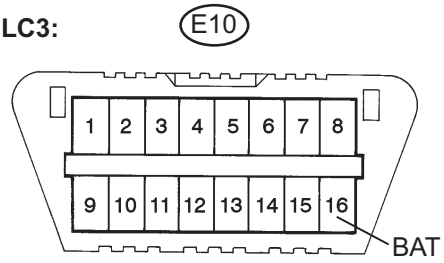

C126231E14

(b) Measure the resistance according to the value(s) in the table below.

Standard resistance

Tester Connection	Condition	Specified Value
E41-1 (CANH) - E10-16 (BAT)	Ignition switch off	6 kΩ or higher
E41-7 (CANL) - E10-16 (BAT)	Ignition switch off	6 kΩ or higher

OK → **REPAIR OR REPLACE ACCESSORY GATEWAY BRANCH WIRE OR CONNECTOR**

NG

CA

10	CHECK FOR SHORT TO B+ IN CAN BUS WIRE (A/C AMPLIFIER)

No. 2 CAN J/C Connector (Rear of the Vehicle) Wire Harness Side View:

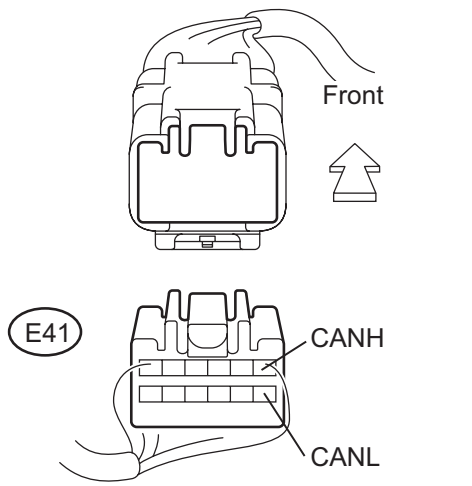

(a) Disconnect the A/C amplifier connector (E38).

DLC3:

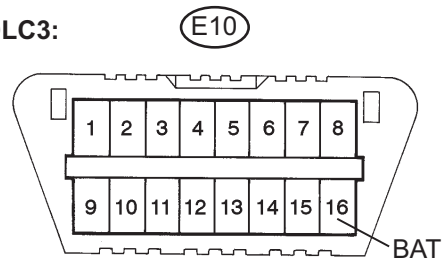

(b) Measure the resistance according to the value(s) in the table below.

Standard resistance

Tester Connection	Condition	Specified Value
E41-1 (CANH) - E10-16 (BAT)	Ignition switch off	6 kΩ or higher
E41-7 (CANL) - E10-16 (BAT)	Ignition switch off	6 kΩ or higher

HINT:
Measure the resistance with the No. 2 CAN J/C connector (E41) disconnected.

NG → **REPAIR OR REPLACE A/C AMPLIFIER BRANCH WIRE OR CONNECTOR**

OK

REPLACE A/C AMPLIFIER

CA

11	CHECK FOR SHORT TO B+ IN CAN BUS WIRE (ECM MAIN BUS WIRE)

No. 2 CAN J/C Connector (Front of the Vehicle) Wire Harness Side View:

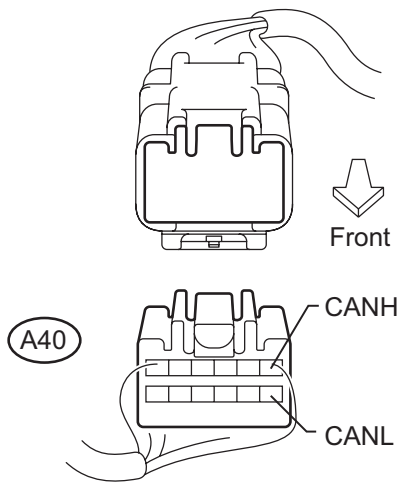

C133245E04

(a) Disconnect the No. 2 CAN J/C connector (E40) (front of the vehicle).

DLC3:

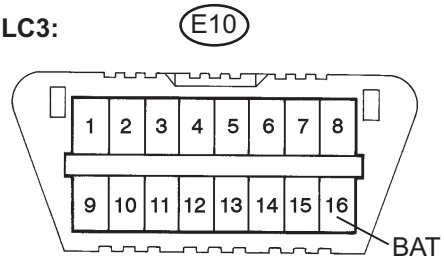

C126231E14

(b) Measure the resistance according to the value(s) in the table below.

Standard resistance

Tester Connection	Condition	Specified Value
A40-1 (CANH) - E10-16 (BAT)	Ignition switch off	6 kΩ or higher
A40-7 (CANL) - E10-16 (BAT)	Ignition switch off	6 kΩ or higher

OK → **Go to step 13**

NG

CA

12	CHECK FOR SHORT TO B+ IN CAN BUS WIRE (ECM)

No. 2 CAN J/C Connector (Front of the Vehicle) Wire Harness Side View:

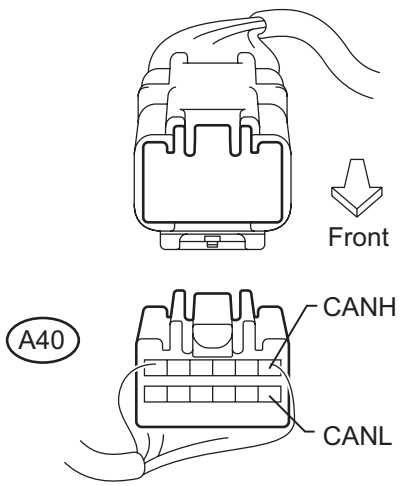

C133245E04

(a) Disconnect the ECM connector (A24 or A55).

DLC3:

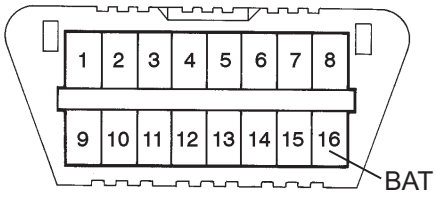

C126231E14

(b) Measure the resistance according to the value(s) in the table below.

Standard resistance

Tester Connection	Condition	Specified Value
A40-1 (CANH) - E10-16 (BAT)	Ignition switch off	6 kΩ or higher
A40-7 (CANL) - E10-16 (BAT)	Ignition switch off	6 kΩ or higher

HINT:
Measure the resistance with the No. 2 CAN J/C connector (A40) disconnected.

NG → **REPAIR OR REPLACE CAN BUS MAIN WIRE OR CONNECTOR (ECM - NO. 2 CAN J/C)**

OK

REPLACE ECM

CA

13	CHECK FOR SHORT TO B+ IN CAN BUS WIRE (SKID CONTROL ECU)

No. 2 CAN J/C Connector (Front of the Vehicle) Wire Harness Side View:

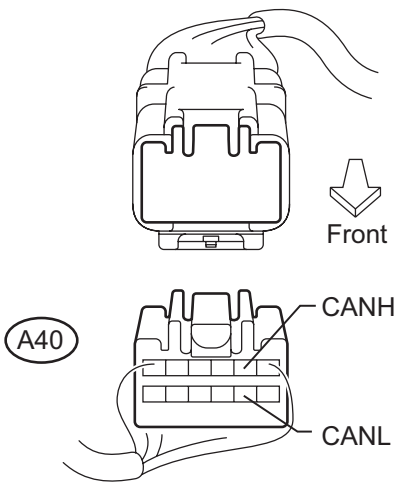

(a) Disconnect the skid control ECU connector (A25, A26 or A60).

DLC3:

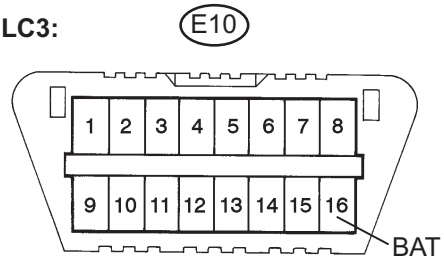

(b) Measure the resistance according to the value(s) in the table below.

Standard resistance

Tester Connection	Condition	Specified Value
A40-2 (CANH) - E10-16 (BAT)	Ignition switch off	6 kΩ or higher
A40-8 (CANL) - E10-16 (BAT)	Ignition switch off	6 kΩ or higher

OK → **REPLACE BRAKE ACTUATOR ASSEMBLY**

NG

REPAIR OR REPLACE SKID CONTROL ECU BRANCH WIRE OR CONNECTOR

CA

Short to GND in CAN Bus Line

DESCRIPTION

A short to GND is suspected in the CAN bus wire when the resistance between terminals 4 (CG) and 6 (CANH), or terminals 4 (CG) and 14 (CANL) of the DLC3 is below 200 Ω.

Symptoms	Trouble Area
The resistance between terminals 6 (CANH) and 4 (CG), or terminals 14 (CANL) and 4 (CG) of the DLC3 is below 200 Ω.	• Short to GND in CAN bus wire • ECM • Brake actuator assembly (Skid control ECU) • Steering angle sensor • Yaw rate sensor • Main Body ECU • A/C amplifier • Combination meter • Center airbag sensor • No. 1 CAN J/C

WIRING DIAGRAM

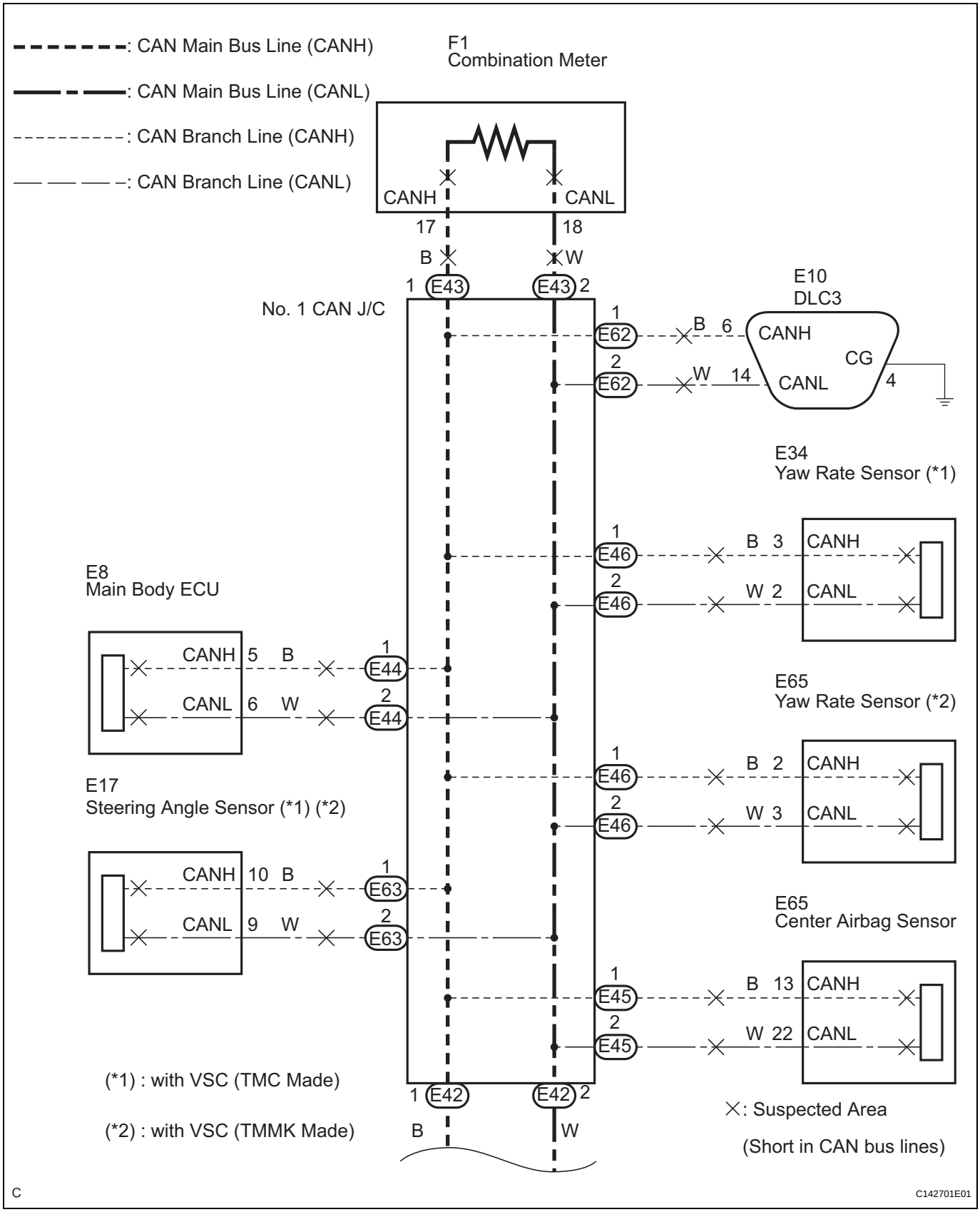

CA

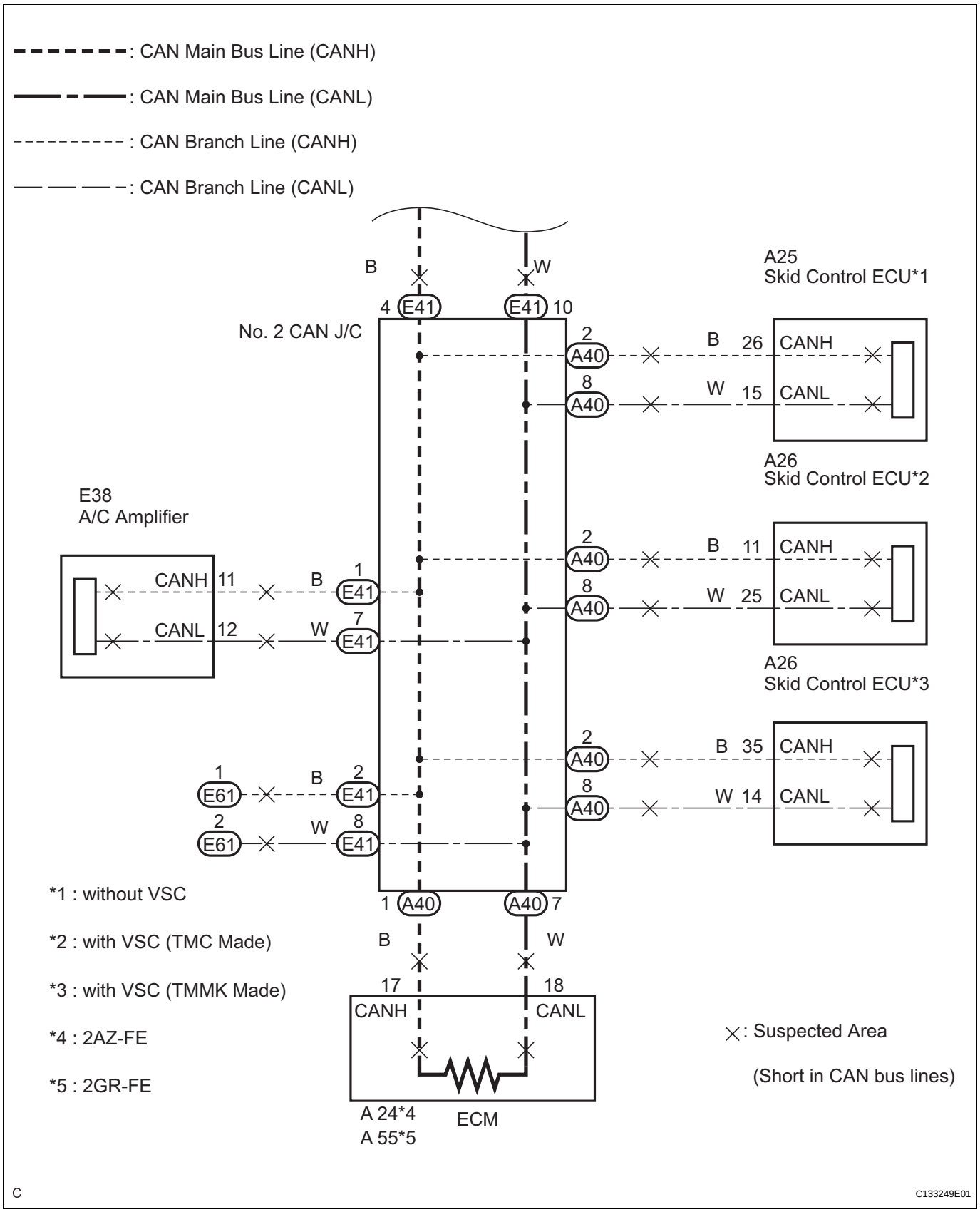

INSPECTION PROCEDURE

NOTICE:

- **Turn the ignition switch off before measuring the resistance of the CAN main wire and CAN branch wires.**

CA

- **After the ignition switch is turned off, check that the key reminder warning system and light reminder warning system are not operating.**
- **Before measuring the resistance, leave the vehicle as is for at least 1 minute and do not operate the ignition switch, any other switches or the doors. If doors need to be opened in order to check connectors, open the doors and leave them open.**

HINT:
Operating the ignition switch, any other switches or any triggers related ECU and sensor communication on the CAN, which would cause resistance reading variations.

1	CHECK FOR SHORT TO GND IN CAN BUS WIRE (DLC3 BRANCH WIRE)

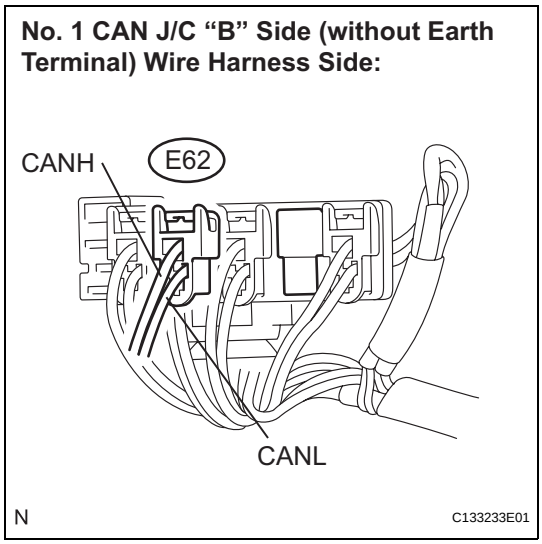

(a) Turn the ignition switch off.
(b) Disconnect the DLC3 branch wire gray connector (E62) from the No. 1 CAN J/C "B" side (without earth terminal).
NOTICE:
- **Before disconnecting the connector, make a note of where it is connected.**
- **Reconnect the connector to its original position.**

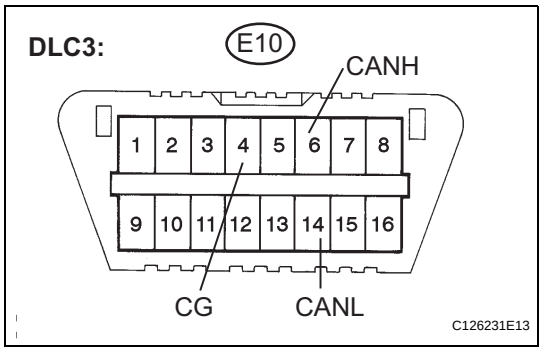

(c) Measure the resistance according to the value(s) in the table below.
Standard resistance

Tester Connection	Condition	Specified Value
E10-6 (CANH) - E10-4 (CG)	Ignition switch off	200 Ω or higher
E10-14 (CANL) - E10-4 (CG)	Ignition switch off	200 Ω or higher

(d) Reconnect the DLC3 branch wire connector (E62) to the No. 1 CAN J/C "B" side (without earth terminal).

NG → **REPAIR OR REPLACE DLC3 BRANCH WIRE OR CONNECTOR**

OK

2 CHECK FOR SHORT TO GND IN CAN BUS WIRE (NO. 1 CAN J/C SIDE)

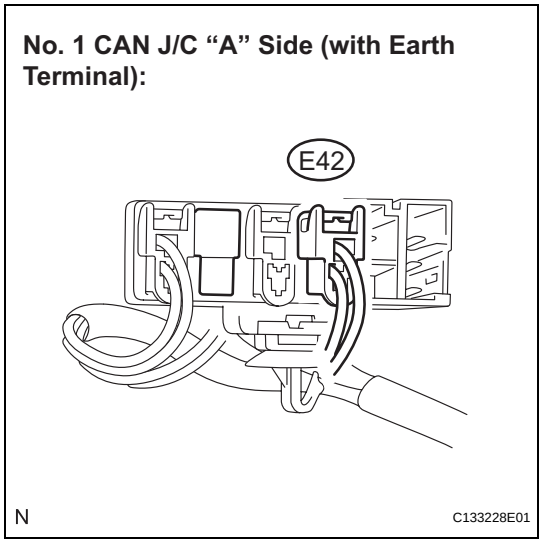

(a) Disconnect the CAN main bus wire white connector (E42) from the No. 1 CAN J/C "A" side (with earth terminal).

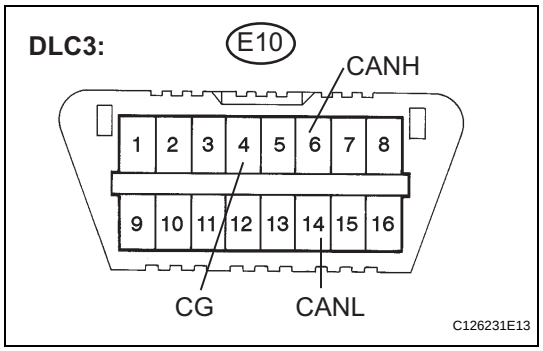

(b) Measure the resistance between terminals 6 (CANH) and 4 (CG), and between terminals 14 (CANL) and 4 (CG) of the DLC3 each time a connector is disconnected.

Standard resistance

Tester Connection	Condition	Specified Value
E10-6 (CANH) - E10-4 (CG)	Ignition switch off	200 Ω or higher
E10-14 (CANL) - E10-4 (CG)	Ignition switch off	200 Ω or higher

OK → **Go to step 6**

NG

3 CHECK FOR SHORT TO GND IN CAN BUS WIRE

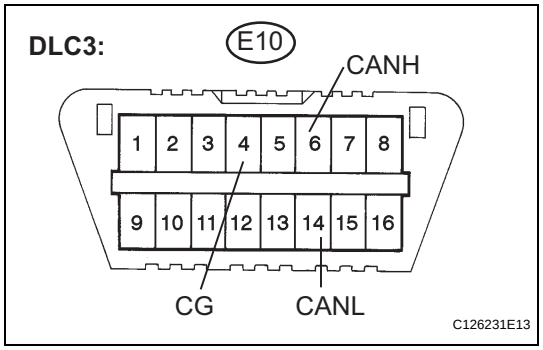

(a) Disconnect connectors from the No. 1 CAN J/C one at a time.
HINT:
Disconnect the ECU and sensor connectors other than the DLC3 branch wires and CAN main bus lines between the No. 1 CAN J/C.

(b) Measure the resistance between terminals 6 (CANH) and 4 (CG), and between terminals 14 (CANL) and 4 (CG) of the DLC3 each time a connector is disconnected.

CA

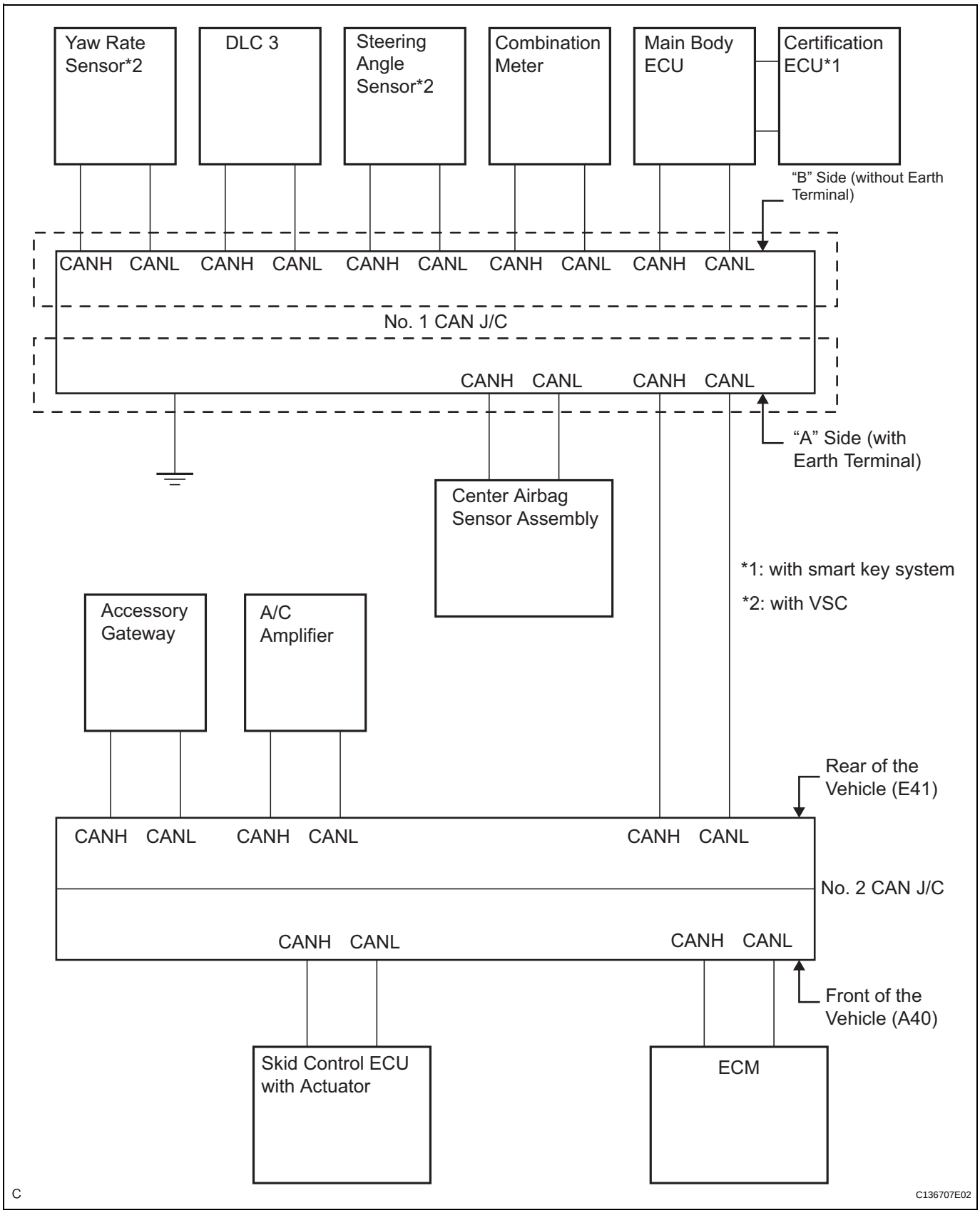
Yaw Rate Sensor*2
DLC 3
Steering Angle Sensor*2
Combination Meter
Main Body ECU
Certification ECU*1
"B" Side (without Earth Terminal)
CANH CANL CANH CANL CANH CANL CANH CANL CANH CANL
No. 1 CAN J/C
CANH CANL CANH CANL
"A" Side (with Earth Terminal)
Center Airbag Sensor Assembly
*1: with smart key system
*2: with VSC
Accessory Gateway
A/C Amplifier
Rear of the Vehicle (E41)
CANH CANL CANH CANL CANH CANL
No. 2 CAN J/C
CANH CANL CANH CANL
Front of the Vehicle (A40)
Skid Control ECU with Actuator
ECM
C
C136707E02

CA

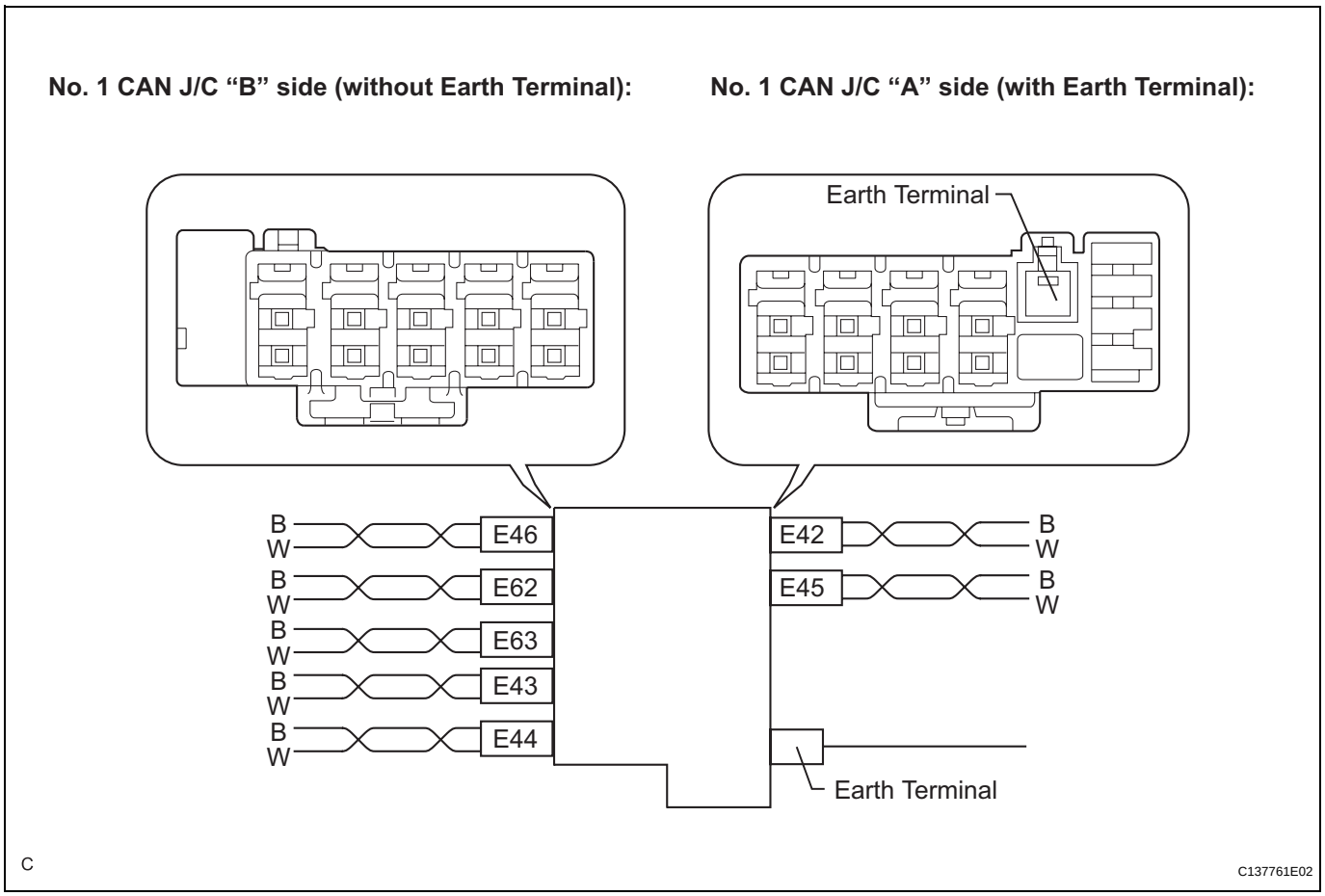

No. 1 CAN J/C connectors ("A" side, with earth terminal)	Connector Color	Wire Color (CAN-H)	Wire Color (CAN-L)
Airbag Sensor Assembly Center (E45)	Black	B	W

No. 1 CAN J/C connectors ("A" side, with earth terminal)	Connector Color	Wire Color (CAN-H)	Wire Color (CAN-L)
Yaw Rate Sensor* (E46)	Blue	B	W
Steering Angle Sensor* (E63)	Brown	B	W
Combination Meter (E43)	White	B	W
Main Body ECU (E44)	Black	B	W

*: with VSC

NOTICE:

Do not reconnect the disconnected connectors until this inspection is complete because there may be a short to GND in 2 or more CAN bus wires.

Result

Symptom	Proceed to
The resistance between terminals 6 (CANH) and 4 (CG), or the resistance between 14 (CANL) and 4 (CG) is still below 200 Ω when all the specified connectors are disconnected from the No. 1 CAN J/C. (There is a short to GND in the CAN main bus wires between the No. 1 CAN J/C and No. 2 CAN J/C.)	**A**
The resistance between terminals 6 (CANH) and 4 (CG), or the resistance between 14 (CANL) and 4 (CG) becomes normal (200 Ω or more) when a connector is disconnected from the CAN J/C. (There is a short to GND in one of the areas that relate to the disconnected bus wires.)	**B**

(c) When there is a short to GND in one or more of the bus wires that connect to an ECU (or sensor):

CA

(1) Reconnect all of the connectors to the No. 1 CAN J/C, except for the one that was disconnected last (the bus wire that is shorted to GND). Check that the resistance shown on the tester is normal (200 Ω or more) to confirm that there is a short to GND in one branch wire only.
HINT:
- The connectors connected to the No. 1 CAN J/C can be distinguished according to the color of the communication bus wires and the shape of the connectors.
- Reconnecting the connectors to non-specified positions on the No. 1 CAN J/C does not affect system operation. However, it is preferred to reconnect the connectors to their specified positions to avoid negative effects on the wiring such as tension on the wiring harnesses, and to make future maintenance easier.

A → **REPLACE NO. 1 CAN J/C**

CA

B

4 RECONNECT CONNECTOR

(a) Reconnect the connector of the bus wire that is shorted to GND to the No. 1 CAN J/C (the connector that caused the bus wire resistance to change to 200 Ω or more when it was disconnected).

NEXT

5 CHECK FOR SHORT TO GND IN CAN BUS WIRE

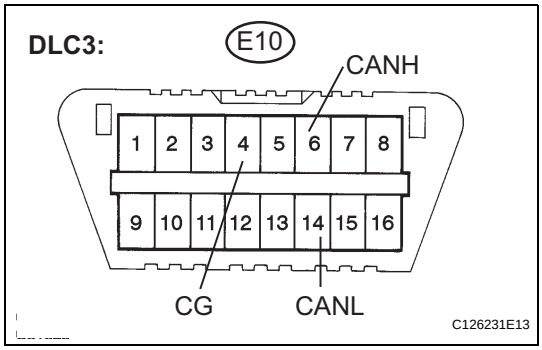

(a) Disconnect the connector that includes terminals CANH and CANL from the ECU (or sensor) to which the bus wire shorted to GND is connected (See page CA-10).
(b) Measure the resistance according to the value(s) in the table below.

Standard resistance

Tester Connection	Condition	Specified Value
E10-6 (CANH) - E10-4 (CG)	Ignition switch off	200 Ω or higher
E10-14 (CANL) - E10-4 (CG)	Ignition switch off	200 Ω or higher

HINT:
If the resistance changes to 200 Ω or higher when the connector is disconnected from the ECU (or sensor), there may be a short in the ECU (or sensor).

NG → **REPAIR OR REPLACE CORRESPONDING ECU OR SENSOR BUS LINE OR CONNECTOR**

OK

REPLACE CORRESPONDING ECU OR SENSOR

6 CHECK FOR SHORT TO GND IN CAN BUS WIRE

No. 2 CAN J/C Connector (Front of the Vehicle) Wire Harness Side View:

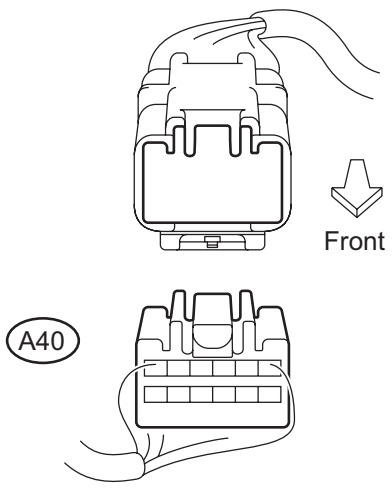

(a) Reconnect the CAN main bus line connector (E42) to the No. 1 CAN J/C "A" side (with earth terminal).
(b) Disconnect the No. 2 CAN J/C connector (A40) (front of the vehicle).

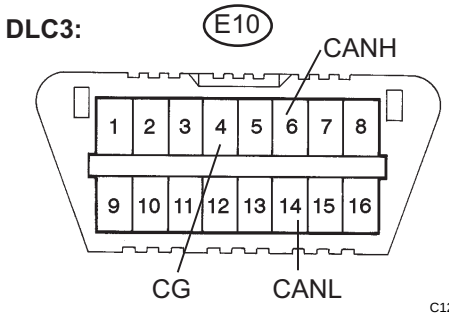

(c) Measure the resistance according to the value(s) in the table below.
Standard resistance

Tester Connection	Condition	Specified Value
E10-6 (CANH) - E10-4 (CG)	Ignition switch off	200 Ω or higher
E10-14 (CANL) - E10-4 (CG)	Ignition switch off	200 Ω or higher

OK → **Go to step 11**

NG

CA

7	CHECK FOR SHORT TO GND IN CAN BUS WIRE (NO. 1 CAN J/C - NO. 2 CAN J/C)

No. 2 CAN J/C Connector (Rear of the Vehicle) Wire Harness Side View:

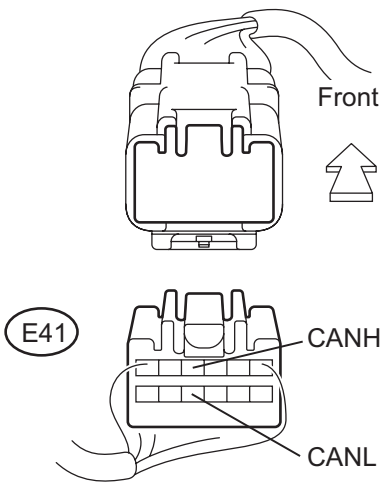

C133246E01

(a) Disconnect the No. 2 CAN J/C connector (E41) (rear of the vehicle).

DLC3:

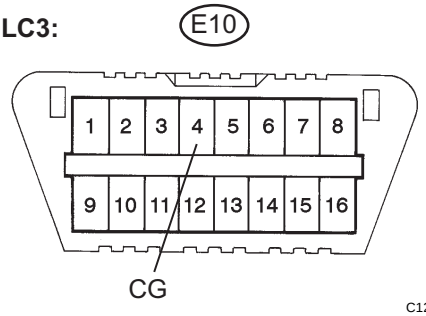

C126231E15

(b) Measure the resistance according to the value(s) in the table below.

Standard resistance

Tester Connection	Condition	Specified Value
E41-4 (CANH) - E10-4 (CG)	Ignition switch off	200 Ω or higher
E41-10 (CANL) - E10-4 (CG)	Ignition switch off	200 Ω or higher

NG → **REPAIR OR REPLACE CAN BUS MAIN WIRE OR CONNECTOR (NO. 1 CAN J/C - NO. 2 CAN J/C)**

OK

8	RECONNECT CONNECTOR

(a) Reconnect the No. 2 CAN J/C connector (A40) (front of the vehicle).

NEXT

9	CHECK FOR SHORT TO GND IN CAN BUS WIRE (A/C AMPLIFIER BRANCH WIRE)

No. 2 CAN J/C Connector (Rear of the Vehicle) Wire Harness Side View:

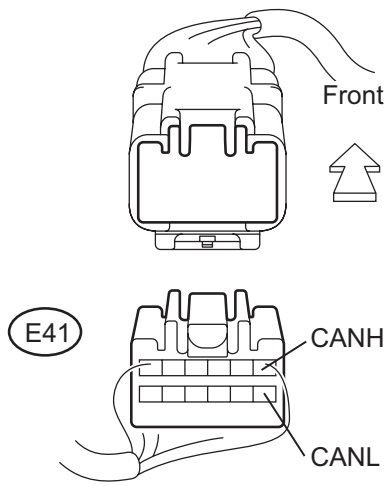

C133246E05

(a) Disconnect the No. 2 CAN J/C connector (E41) (rear of the vehicle).

DLC3:

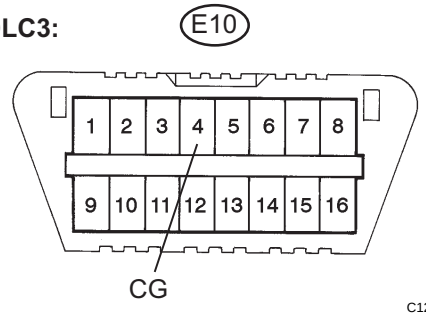

C126231E15

(b) Measure the resistance according to the value(s) in the table below.

Standard resistance

Tester Connection	Condition	Specified Value
E41-1 (CANH) - E10-4 (CG)	Ignition switch off	200 Ω or higher
E41-7 (CANL) - E10-4 (CG)	Ignition switch off	200 Ω or higher

OK → **REPAIR OR REPLACE ACCESSORY GATEWAY BRANCH WIRE OR CONNECTOR**

NG

CA

10	CHECK FOR SHORT TO GND IN CAN BUS WIRE (A/C AMPLIFIER)

No. 2 CAN J/C Connector (Rear of the Vehicle) Wire Harness Side View:

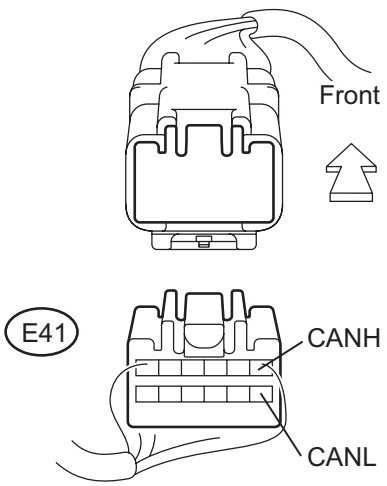

C133246E05

(a) Disconnect the A/C amplifier connector (E38).

DLC3:

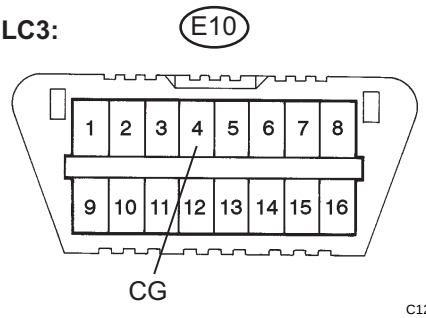

C126231E15

(b) Measure the resistance according to the value(s) in the table below.

Standard resistance

Tester Connection	Condition	Specified Value
E41-1 (CANH) - E10-4 (CG)	Ignition switch off	200 Ω or higher
E41-7 (CANL) - E10-4 (CG)	Ignition switch off	200 Ω or higher

NG → **REPAIR OR REPLACE A/C AMPLIFIER BRANCH WIRE OR CONNECTOR**

OK

REPLACE A/C AMPLIFIER

CA

11	CHECK FOR SHORT TO GND IN CAN BUS WIRE (ECM MAIN BUS WIRE)

No. 2 CAN J/C Connector (Front of the Vehicle) Wire Harness Side View:

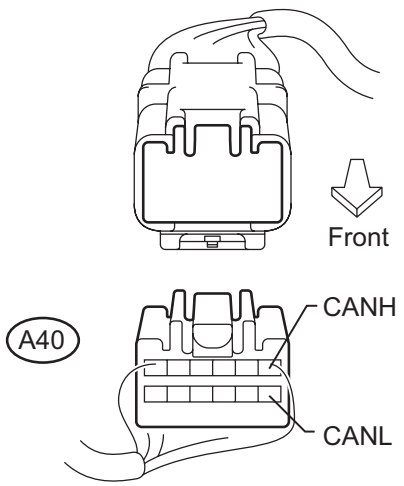

C133245E04

(a) Disconnect the No. 2 CAN J/C connector (A40) (front of the vehicle).

DLC3:

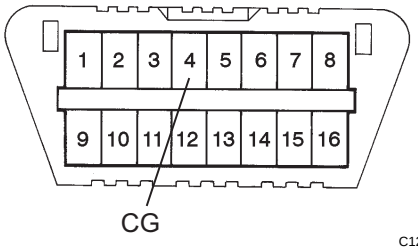

C126231E15

(b) Measure the resistance according to the value(s) in the table below.

Standard resistance

Tester Connection	Condition	Specified Value
A40-1 (CANH) - E10-4 (CG)	Ignition switch off	200 Ω or higher
A40-7 (CANL) - E10-4 (CG)	Ignition switch off	200 Ω or higher

OK → **Go to step 13**

NG

CA

12	CHECK FOR SHORT TO GND IN CAN BUS WIRE (ECM)

No. 2 CAN J/C Connector (Front of the Vehicle) Wire Harness Side View:

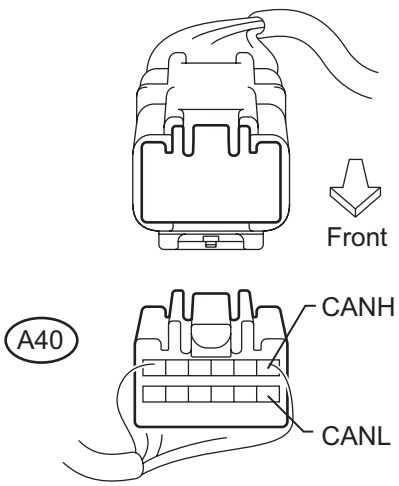

C133245E04

(a) Disconnect the ECM connector (A24 or A55).

DLC3:

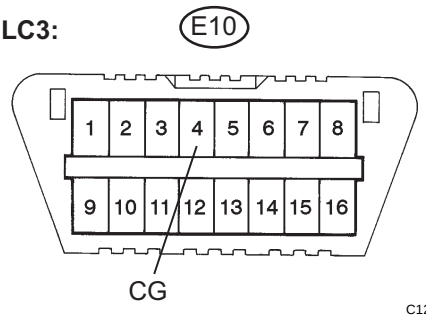

C126231E15

(b) Measure the resistance according to the value(s) in the table below.

Standard resistance

Tester Connection	Condition	Specified Value
A40-1 (CANH) - E10-4 (CG)	Ignition switch off	200 Ω or higher
A40-7 (CANL) - E10-4 (CG)	Ignition switch off	200 Ω or higher

NG → **REPAIR OR REPLACE CAN BUS MAIN WIRE OR CONNECTOR (ECM - NO. 2 CAN J/C)**

OK

REPLACE ECM

CA

13 CHECK FOR SHORT TO GND IN CAN BUS WIRE (SKID CONTROL ECU)

No. 2 CAN J/C Connector (Front of the Vehicle) Wire Harness Side View:

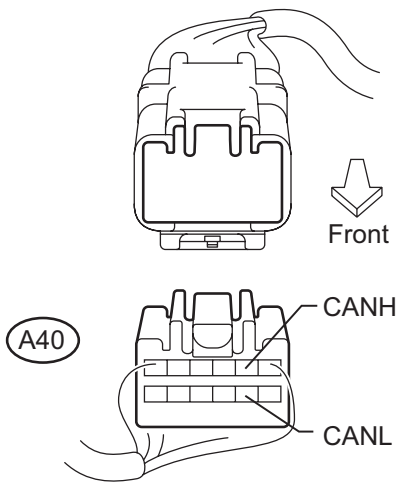

C133245E05

(a) Disconnect the skid control ECU connector (A25, A26 or A60).

DLC3:

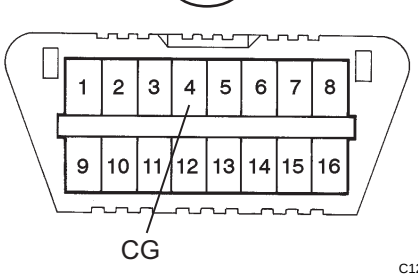

C126231E15

(b) Measure the resistance according to the value(s) in the table below.

Standard resistance

Tester Connection	Condition	Specified Value
A40-2 (CANH) - E10-4 (CG)	Ignition switch off	200 Ω or higher
A40-8 (CANL) - E10-4 (CG)	Ignition switch off	200 Ω or higher

OK → **REPLACE BRAKE ACTUATOR ASSEMBLY**

NG

REPAIR OR REPLACE SKID CONTROL ECU BRANCH WIRE OR CONNECTOR

CA

Open in One Side of CAN Branch Line

DESCRIPTION

If 2 or more ECUs and/or sensors do not appear on the intelligent tester "Communication Bus Check" screen, one side of the CAN branch line may be open. (One side of the CAN-H [branch line] / CAN-L [branch line] of the ECU and/or sensor is open.)

Symptom	Trouble Area
2 or more ECUs and/or sensors do not appear on the intelligent tester "Communication Bus Check" screen.	• One side of the CAN branch line is open • Steering angle sensor • Skid control ECU • ECM • Yaw rate sensor • Main body ECU • A/C amplifier • Center airbag sensor • Combination meter

WIRING DIAGRAM

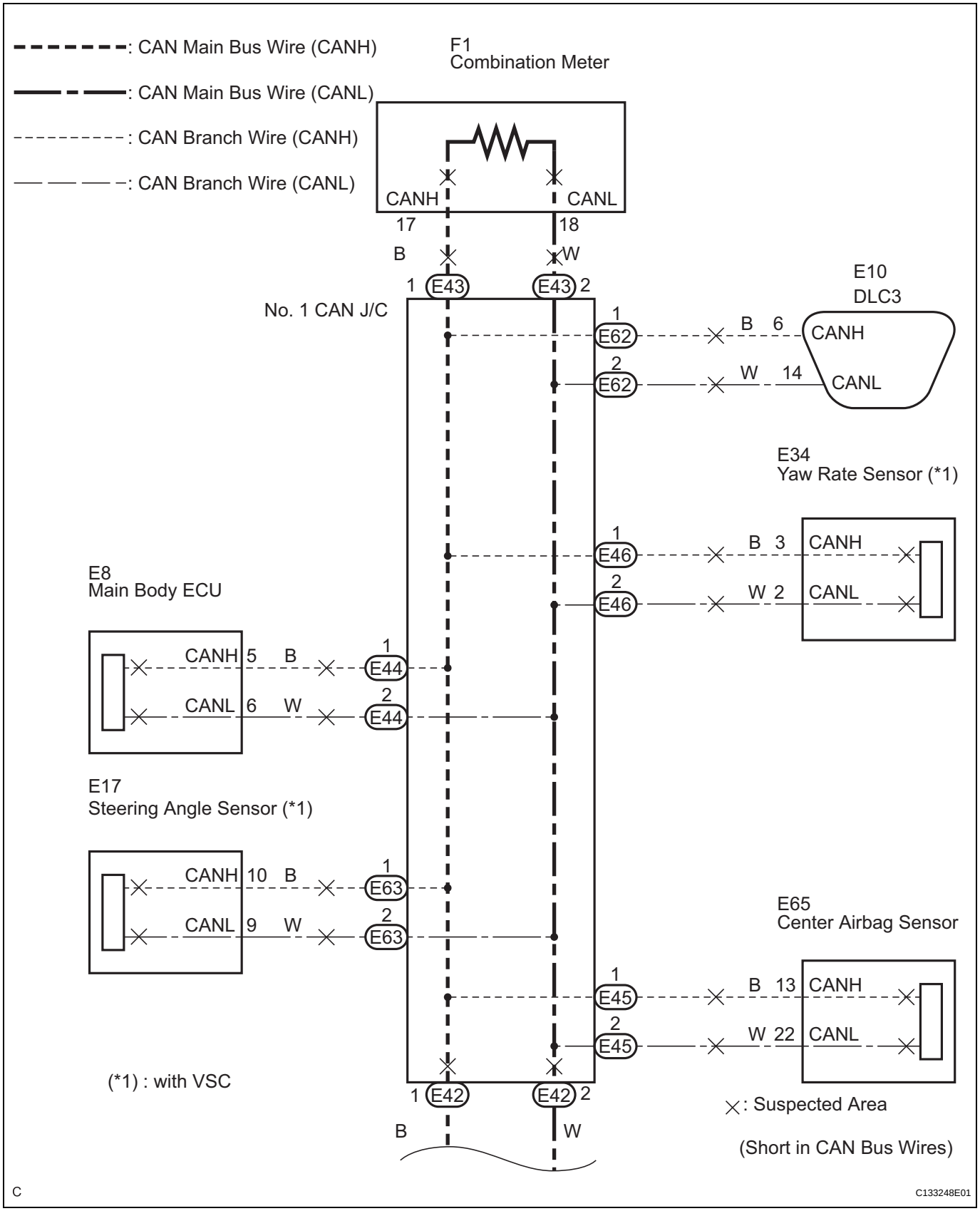

CA

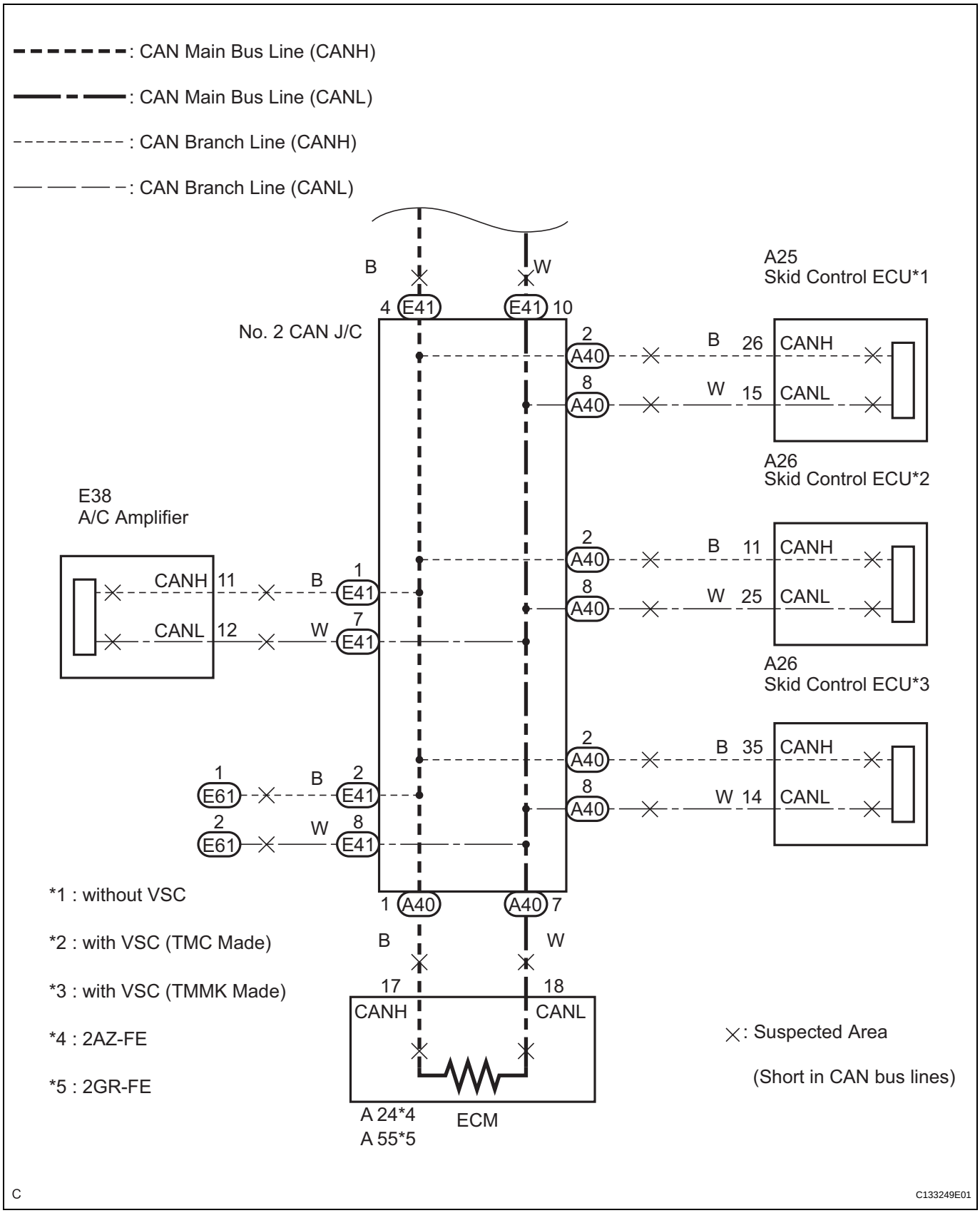
: CAN Main Bus Line (CANH)
: CAN Main Bus Line (CANL)
: CAN Branch Line (CANH)
: CAN Branch Line (CANL)
No. 2 CAN J/C
A25
Skid Control ECU*1
A26
Skid Control ECU*2
A26
Skid Control ECU*3
E38
A/C Amplifier
CANH
CANL
ECM
A 24*4
A 55*5
*1 : without VSC
*2 : with VSC (TMC Made)
*3 : with VSC (TMMK Made)
*4 : 2AZ-FE
*5 : 2GR-FE
: Suspected Area
(Short in CAN bus lines)
C
C133249E01

INSPECTION PROCEDURE

HINT:
Perform the following inspection for the ECUs (sensors) which are not displayed on the intelligent tester. If the malfunction cannot be identified, then perform the following inspections for the ECUs (sensors) connected to CAN communication.

1	CHECK FOR OPEN IN ONE SIDE OF CAN BRANCH WIRE

(a) Confirm the systems (ECUs and sensors), which use CAN communication, equipped on the vehicle. (See page CA-25)
(b) Using the intelligent tester, select and perform "Communication Bus Check". (See page CA-25) [*1]
(c) Disconnect the connectors from the ECUs or sensors that are not displayed on the screen. [*2]
(d) Check that only the ECUs and sensors from which the connectors were disconnected in the previous step are not displayed on the "Communication Bus Check" screen. [*3]
HINT:
If any ECUs or sensors, other than those from which the connectors were disconnected in the previous step, are not displayed on the "Communication Bus Check" screen, reconnect the disconnected connectors and repeat the procedures [*1], [*2], and [*3].
(e) Perform the communication stop mode check for the ECUs and sensors which correspond to the disconnected connectors. (See page CA-10)

NEXT

GO TO CORRESPONDING COMMUNICATION STOP MODE