SECTION BRC
BRAKE CONTROL SYSTEM

CONTENTS

VDC/TCS/ABS

BASIC INSPECTION 4

DIAGNOSIS AND REPAIR WORKFLOW 4
Work Flow 4
Diagnostic Work Sheet 7

INSPECTION AND ADJUSTMENT 8

ADDITIONAL SERVICE WHEN REPLACING CONTROL UNIT 8
ADDITIONAL SERVICE WHEN REPLACING CONTROL UNIT : Description 8
ADDITIONAL SERVICE WHEN REPLACING CONTROL UNIT : Special Repair Requirement 8

ADJUSTMENT OF STEERING ANGLE SENSOR NEUTRAL POSITION 8
ADJUSTMENT OF STEERING ANGLE SENSOR NEUTRAL POSITION : Description 8
ADJUSTMENT OF STEERING ANGLE SENSOR NEUTRAL POSITION : Special Repair Requirement 8

SYSTEM DESCRIPTION 10

VDC 10
System Diagram 10
System Description 10
Component Parts Location 11
Component Description 11

TCS 13
System Diagram 13
System Description 13
Component Parts Location 14
Component Description 14

ABS 16
System Diagram 16
System Description 16
Component Parts Location 17
Component Description 17

EBD 19
System Diagram 19
System Description 19
Component Parts Location 20
Component Description 20

DIAGNOSIS SYSTEM [ABS ACTUATOR AND ELECTRIC UNIT (CONTROL UNIT)] 22
CONSULT Function 22

DTC/CIRCUIT DIAGNOSIS 27

C1101, C1102, C1103, C1104 WHEEL SENSOR 27
Description 27
DTC Logic 27
Diagnosis Procedure 27
Special Repair Requirement 29

C1105, C1106, C1107, C1108 WHEEL SENSOR 30
Description 30
DTC Logic 30
Diagnosis Procedure 30
Special Repair Requirement 34

C1109 POWER AND GROUND SYSTEM 35
Description 35
DTC Logic 35
Diagnosis Procedure 35
Special Repair Requirement 36

C1110, C1153, C1170 ABS ACTUATOR AND ELECTRIC UNIT (CONTROL UNIT) 37
DTC Logic 37
Diagnosis Procedure 37
Special Repair Requirement 37

C1111 ABS MOTOR, MOTOR RELAY SYSTEM 38
Description 38
DTC Logic 38
Diagnosis Procedure 38
Special Repair Requirement 39

C1115 WHEEL SENSOR 40
Description 40
DTC Logic 40
Diagnosis Procedure 40
Special Repair Requirement 44

C1116 STOP LAMP SWITCH 45
Description 45
DTC Logic 45
Diagnosis Procedure 45
Component Inspection 48
Special Repair Requirement 48

C1120, C1122, C1124, C1126 IN ABS SOL 50
Description 50
DTC Logic 50
Diagnosis Procedure 50
Special Repair Requirement 51

C1121, C1123, C1125, C1127 OUT ABS SOL.. 52
Description 52
DTC Logic 52
Diagnosis Procedure 52
Special Repair Requirement 53

C1130 ENGINE SIGNAL 54
Description 54
DTC Logic 54
Diagnosis Procedure 54
Special Repair Requirement 54

C1140 ACTUATOR RELAY SYSTEM 56
Description 56
DTC Logic 56
Diagnosis Procedure 56
Special Repair Requirement 57

C1142 PRESS SENSOR 58
Description 58
DTC Logic 58
Diagnosis Procedure 58
Special Repair Requirement 59

C1143 STEERING ANGLE SENSOR 60
Description 60
DTC Logic 60
Diagnosis Procedure 60
Special Repair Requirement 61

C1144 INCOMPLETE STEERING ANGLE SENSOR ADJUSTMENT 62
DTC Logic 62
Diagnosis Procedure 62
Special Repair Requirement 62

C1145, C1146 YAW RATE/SIDE G SENSOR... 63
Description 63
DTC Logic 63
Diagnosis Procedure 63
Special Repair Requirement 65

C1147, C1148, C1149, C1150 USV/HSV LINE.. 66
Description 66
DTC Logic 66
Diagnosis Procedure 66
Special Repair Requirement 67

C1155 BRAKE FLUID LEVEL SWITCH 68
Description 68
DTC Logic 68
Diagnosis Procedure 68
Component Inspection 70
Special Repair Requirement 70

U1000 CAN COMM CIRCUIT 71
Description 71
DTC Logic 71
Diagnosis Procedure 71
Special Repair Requirement 71

U1002 SYSTEM COMM (CAN) 72
Description 72
DTC Logic 72
Diagnosis Procedure 72
Special Repair Requirement 73

POWER SUPPLY AND GROUND CIRCUIT 74
Description 74
Diagnosis Procedure 74

PARKING BRAKE SWITCH 76
Description 76
Diagnosis Procedure 76
Component Inspection 76

VDC OFF SWITCH 78
Description 78
Diagnosis Procedure 78
Component Inspection 79
Special Repair Requirement 79

ABS WARNING LAMP 80
Description 80
Component Function Check 80
Diagnosis Procedure 80
Special Repair Requirement 80

BRAKE WARNING LAMP 81
Description 81
Component Function Check 81
Diagnosis Procedure 81
Special Repair Requirement 81

VDC WARNING LAMP 82
Description 82
Component Function Check 82

Diagnosis Procedure 82
Special Repair Requirement 82

VDC OFF INDICATOR LAMP 83
Description 83
Component Function Check 83
Diagnosis Procedure 83
Special Repair Requirement 84

ECU DIAGNOSIS INFORMATION 85

ABS ACTUATOR AND ELECTRIC UNIT (CONTROL UNIT) 85
Reference Value 85
Wiring Diagram - BRAKE CONTROL SYSTEM -..... 89
Fail-Safe 93
DTC Inspection Priority Chart 94
DTC Index 95

SYMPTOM DIAGNOSIS 96

EXCESSIVE ABS FUNCTION OPERATION FREQUENCY 96
Diagnosis Procedure 96

UNEXPECTED PEDAL REACTION 97
Diagnosis Procedure 97

THE BRAKING DISTANCE IS LONG 98
Diagnosis Procedure 98

ABS FUNCTION DOES NOT OPERATE 99
Diagnosis Procedure 99

PEDAL VIBRATION OR ABS OPERATION SOUND OCCURS 100
Diagnosis Procedure 100

VEHICLE JERKS DURING VDC/TCS/ABS CONTROL 101
Diagnosis Procedure 101

NORMAL OPERATING CONDITION 102
Description 102

PRECAUTION 103

PRECAUTIONS 103

FOR USA AND CANADA 103
FOR USA AND CANADA : Precaution for Supplemental Restraint System (SRS) "AIR BAG" and "SEAT BELT PRE-TENSIONER" 103
FOR USA AND CANADA : Precaution for Battery Service 103
FOR USA AND CANADA : Precaution for Procedure without Cowl Top Cover 103
FOR USA AND CANADA : Precaution for Brake System 104
FOR USA AND CANADA : Precaution for Brake Control 104
FOR USA AND CANADA : Precautions for Harness Repair 104

FOR MEXICO 105
FOR MEXICO : Precaution for Supplemental Restraint System (SRS) "AIR BAG" and "SEAT BELT PRE-TENSIONER" 105
FOR MEXICO : Precaution for Battery Service 105
FOR MEXICO : Precaution for Procedure without Cowl Top Cover 106
FOR MEXICO : Precaution for Brake System 106
FOR MEXICO : Precaution for Brake Control 106
FOR MEXICO : Precautions for Harness Repair 106

PREPARATION 108

PREPARATION 108
Special Service Tool 108

REMOVAL AND INSTALLATION 109

WHEEL SENSOR 109

FRONT WHEEL SENSOR 109
FRONT WHEEL SENSOR : Exploded View 109
FRONT WHEEL SENSOR : Removal and Installation 109

REAR WHEEL SENSOR 110
REAR WHEEL SENSOR : Exploded View 110
REAR WHEEL SENSOR : Removal and Installation 110

SENSOR ROTOR 111

FRONT SENSOR ROTOR 111
FRONT SENSOR ROTOR : Exploded View 111
FRONT SENSOR ROTOR : Removal and Installation 111

REAR SENSOR ROTOR 111
REAR SENSOR ROTOR : Exploded View 111
REAR SENSOR ROTOR : Removal and Installation 111

ABS ACTUATOR AND ELECTRIC UNIT (CONTROL UNIT) 112
Exploded View 112
Removal and Installation 112

YAW RATE/SIDE G SENSOR 114
Exploded View 114
Removal and Installation 114

STEERING ANGLE SENSOR 115
Exploded View 115
Removal and Installation 115

VDC OFF SWITCH 116
Removal and Installation 116

BASIC INSPECTION

DIAGNOSIS AND REPAIR WORKFLOW

Work Flow

INFOID:0000000009361454

PRECAUTIONS FOR DIAGNOSIS

If steering angle sensor, steering system parts, suspension system parts, ABS actuator and electric unit (control unit) or tires have been replaced, or if wheel alignment has been adjusted, be sure to adjust neutral position of steering angle sensor before driving. Refer to BRC-8, "ADJUSTMENT OF STEERING ANGLE SENSOR NEUTRAL POSITION : Description".

OVERALL SEQUENCE

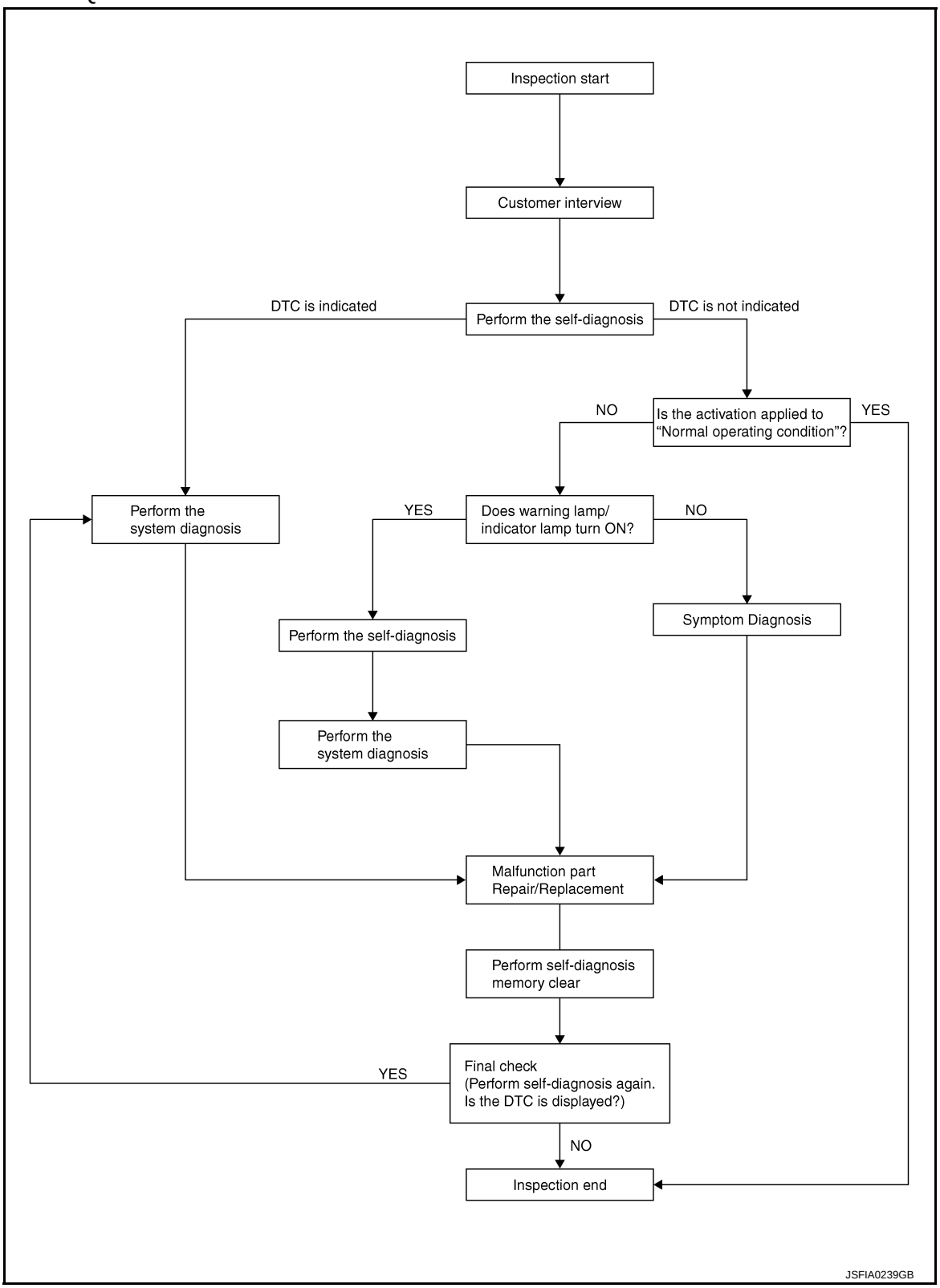

DETAILED FLOW

1. COLLECT THE INFORMATION FROM THE CUSTOMER

Get the detailed information from the customer about the symptom (the condition and the environment when the incident/malfunction occurred) using the diagnosis work sheet. Refer to BRC-7, "Diagnostic Work Sheet".

>> GO TO 2.

2. PERFORM THE SELF-DIAGNOSIS

Perform self-diagnosis with CONSULT.

Is there any DTC displayed?

YES >> Record or print self-diagnosis results and freeze frame data (FFD). GO TO 3.
NO >> GO TO 4.

3. PERFORM THE SYSTEM DIAGNOSIS

Perform the diagnosis applicable to the displayed DTC of “ABS” with CONSULT. Refer to BRC-95, "DTC Index".

>> GO TO 7.

4. CHECK THE SYMPTOM THAT IS NOT CONSIDERED A SYSTEM MALFUNCTION

Check that the symptom is a normal operation that is not considered a system malfunction. Refer to BRC-102, "Description".

Is the symptom a normal operation?

YES >> INSPECTION END
NO >> GO TO 5.

5. CHECK THE WARNING LAMP AND INDICATOR LAMP FOR ILLUMINATION

Check that the warning lamp and indicator lamp illuminate.

- ABS warning lamp: Refer to BRC-80, "Description".
- Brake warning lamp: Refer to BRC-81, "Description".
- VDC OFF indicator lamp: Refer to BRC-83, "Description".
- VDC warning lamp: Refer to BRC-82, "Description".

Is ON/OFF timing normal?

YES >> GO TO 6.
NO >> GO TO 2.

6. PERFORM THE DIAGNOSIS BY SYMPTOM

Perform the diagnosis applicable to the symptom for “ABS” with CONSULT.

>> GO TO 7.

7. REPAIR OR REPLACE THE MALFUNCTIONING PARTS

Repair or replace the specified malfunctioning parts.

>> GO TO 8.

8. MEMORY CLEAR

Perform self-diagnosis memory clear for “ABS” with CONSULT.

>> GO TO 9.

9. FINAL CHECK

Perform the self-diagnosis again, and check that the malfunction is repaired completely.

Is no other DTC present and the repair completed?

YES >> INSPECTION END
NO >> GO TO 3.

Diagnostic Work Sheet

INFOID:0000000009361455

Customer name MR/MS	Model & Year		VIN
Engine #	Trans.		Mileage
Incident Date	Manuf. Date		In Service Date
Symptoms	☐ Noise and vibration (from engine compartment) ☐ Noise and vibration (from axle)	☐ Warning / Indicator activate	☐ Firm pedal operation Large stroke pedal operation
	☐ TCS does not work (Rear wheels slip when accelerating)	☐ ABS does not work (Wheels lock when braking)	☐ Lack of sense of acceleration
Engine conditions	☐ When starting ☐ After starting		
Road conditions	☐ Low friction road (☐Snow ☐Gravel ☐Other) ☐ Bumps / potholes		
Driving conditions	☐ Full-acceleration ☐ High speed cornering ☐ Vehicle speed: Greater than 10 km/h (6 MPH) ☐ Vehicle speed: 10 km/h (6 MPH) or less ☐ Vehicle is stopped		
Applying brake conditions	☐ Suddenly ☐ Gradually		
Other conditions	☐ Operation of electrical equipment ☐ Shift change ☐ Other descriptions		

SFIA3265E

INSPECTION AND ADJUSTMENT

ADDITIONAL SERVICE WHEN REPLACING CONTROL UNIT

ADDITIONAL SERVICE WHEN REPLACING CONTROL UNIT : Description

INFOID:0000000009361456

After replacing the ABS actuator and electric unit (control unit), perform the neutral position adjustment for the steering angle sensor.

ADDITIONAL SERVICE WHEN REPLACING CONTROL UNIT : Special Repair Requirement

INFOID:0000000009361457

1. PERFORM THE NEUTRAL POSITION ADJUSTMENT FOR THE STEERING ANGLE SENSOR

Perform the neutral position adjustment for the steering angle sensor.

>> Refer to BRC-8, "ADJUSTMENT OF STEERING ANGLE SENSOR NEUTRAL POSITION : Special Repair Requirement".

ADJUSTMENT OF STEERING ANGLE SENSOR NEUTRAL POSITION

ADJUSTMENT OF STEERING ANGLE SENSOR NEUTRAL POSITION : Description

INFOID:0000000009361458

When doing work that applies to the list below, make sure to adjust neutral position of steering angle sensor before running vehicle.

×: Required –: Not required

Situation	Adjustment of steering angle sensor neutral position
Removing/Installing ABS actuator and electric unit (control unit)	—
Replacing ABS actuator and electric unit (control unit)	×
Removing/Installing steering angle sensor	×
Replacing steering angle sensor	×
Removing/Installing steering components	×
Replacing steering components	×
Removing/Installing suspension components	×
Replacing suspension components	×
Removing/Installing tire	—
Change tires to new ones	—
Tire rotation	—
Adjusting wheel alignment	×

ADJUSTMENT OF STEERING ANGLE SENSOR NEUTRAL POSITION : Special Repair Requirement

INFOID:0000000009361459

ADJUSTMENT OF STEERING ANGLE SENSOR NEUTRAL POSITION

CAUTION:

To adjust neutral position of steering angle sensor, make sure to use CONSULT.
(Adjustment cannot be done without CONSULT.)

1. ALIGN THE VEHICLE STATUS

Stop vehicle with front wheels in straight-ahead position.

>> GO TO 2.

2. PERFORM THE NEUTRAL POSITION ADJUSTMENT FOR THE STEERING ANGLE SENSOR

1. Select “ABS”, “WORK SUPPORT” and “ST ANGLE SENSOR ADJUSTMENT” in order with CONSULT.

2. Select “START”.
   CAUTION:
   Do not touch steering wheel while adjusting steering angle sensor.
3. After approximately 10 seconds, select “END”.
   NOTE:
   After approximately 60 seconds, it ends automatically.
4. Turn the ignition switch OFF, then turn it ON again.
   CAUTION:
   Be sure to perform above operation.

>> GO TO 3.

3. CHECK DATA MONITOR

1. Run the vehicle with front wheels in straight-ahead position, then stop.
2. Select “ABS”, “DATA MONITOR” and “STR ANGLE SIG” in order with CONSULT, and check the steering angle sensor signal.

STR ANGLE SIG : 0±2.5°

Is the steering angle within the specified range?

YES >> GO TO 4.
NO >> Perform the neutral position adjustment for the steering angle sensor again, GO TO 1.

4. ERASE THE SELF-DIAGNOSIS MEMORY

Erase the self-diagnosis memories for “ABS” and “ENGINE” with CONSULT.
- “ABS”: Refer to BRC-22, "CONSULT Function".
- “ENGINE”: Refer to EC-155, "CONSULT Function".

Are the memories erased?

YES >> INSPECTION END
NO >> Check the items indicated by the self-diagnosis.

SYSTEM DESCRIPTION

VDC

System Diagram

INFOID:0000000009361460

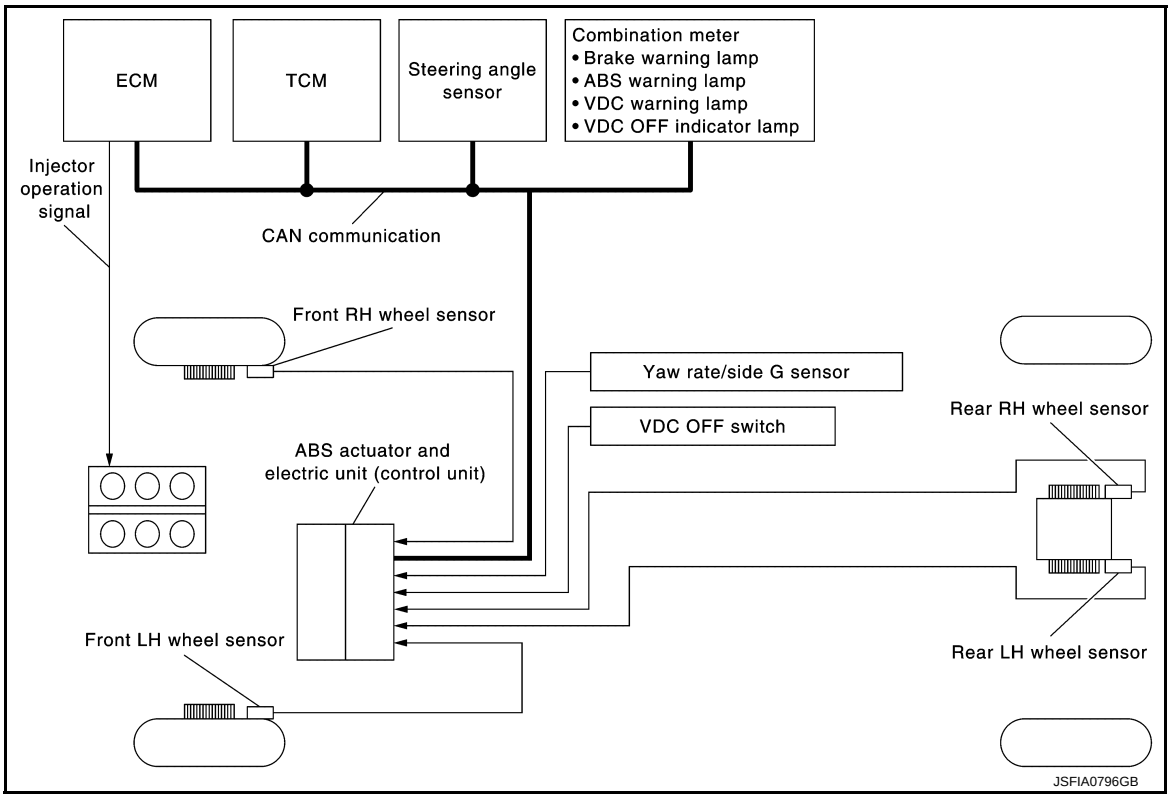

System Description

INFOID:0000000009361461

- Vehicle Dynamics Control system detects driver's steering operation amount and brake pedal travel from steering angle sensor and pressure sensor. Using information from yaw rate/side G sensor and wheel sensor, VDC judges driving condition (conditions of under steer and over steer) to improve vehicle driving stability by controlling brake application to 4 wheels and engine output.
- During VDC operation, it informs driver of system operation by flashing VDC warning lamp.
- Electrical system diagnosis by CONSULT is available.

Component Parts Location

INFOID:0000000009361462

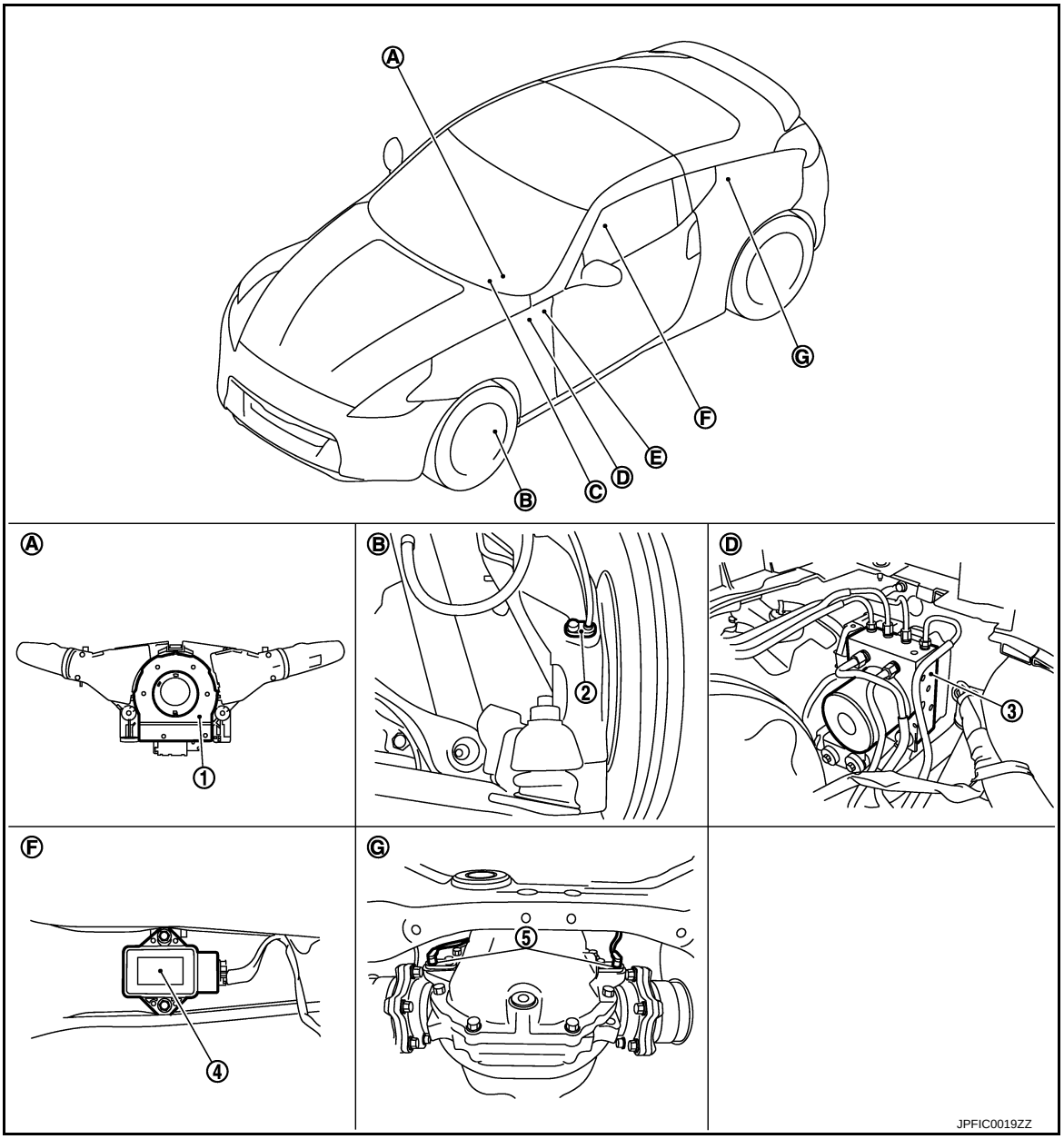

1. Steering angle sensor	2. Front wheel sensor	3. ABS actuator and electric unit (control unit)
4. Yaw rate/side G sensor	5. Rear wheel sensor	
A. Back of spiral cable assembly	B. Steering knuckle	C. ABS warning lamp, brake warning lamp, VDC OFF indicator lamp, VDC warning lamp: MWI-6, "METER SYSTEM : System Description"
D. Inside brake master cylinder cover	E. VDC OFF switch: IP-13, "Exploded View"	F. Under center console
G. Rear final drive assembly		

Component Description

INFOID:0000000009361463

Component parts		Reference
ABS actuator and electric unit (control unit)	Pump	BRC-38, "Description"
	Motor	
	Actuator relay	BRC-56, "Description"
	Solenoid valve	BRC-50, "Description", BRC-52, "Description"
	Pressure sensor	BRC-58, "Description"
	VDC switch-over valve (USV1, USV2, HSV1, HSV2)	BRC-66, "Description"
Wheel sensor		BRC-27, "Description"
Yaw rate/side G sensor		BRC-63, "Description"
Steering angle sensor		BRC-60, "Description"
VDC OFF switch		BRC-78, "Description"
ABS warning lamp		BRC-80, "Description"
Brake warning lamp		BRC-81, "Description"
VDC warning lamp		BRC-82, "Description"
VDC OFF indicator lamp		BRC-83, "Description"

TCS

System Diagram

INFOID:0000000009361464

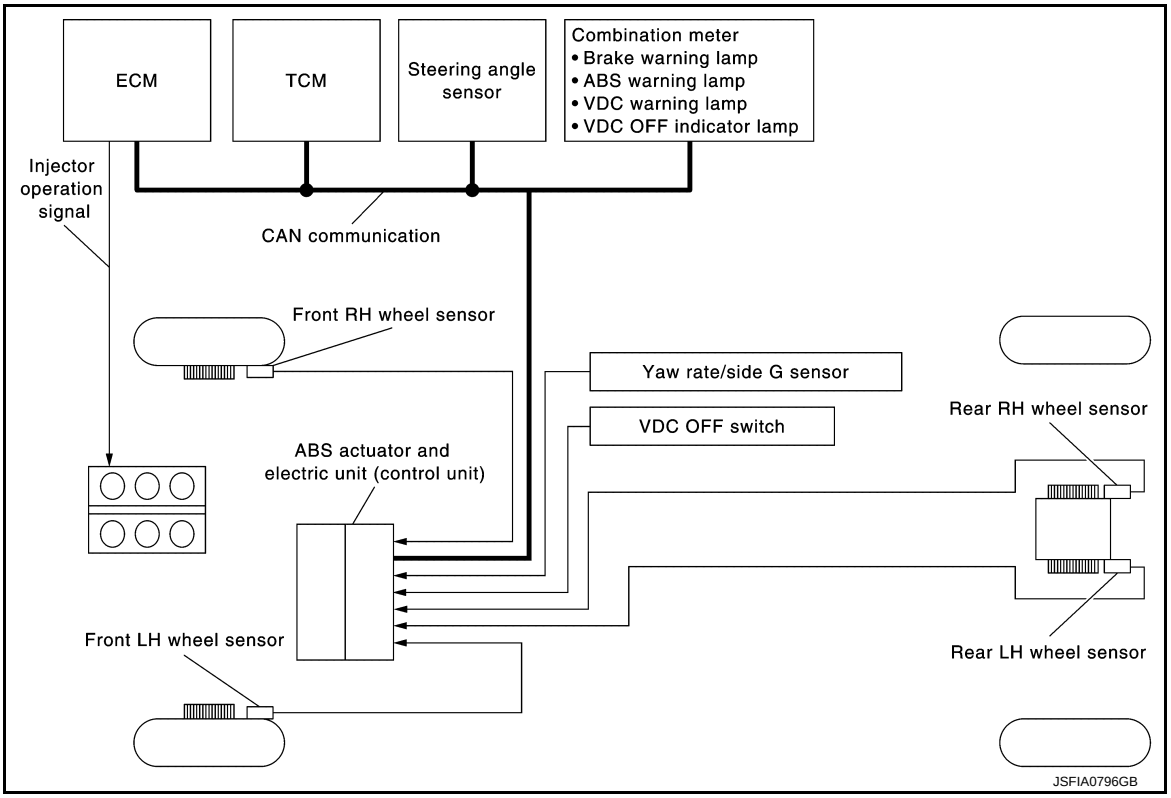

System Description

INFOID:0000000009361465

- Traction Control System is a function that electronically controls engine torque, brake fluid pressure and A/T gear position to ensure the optimum slippage ratio at drive wheels by computing wheel speed signals from 4 wheel sensors. When ABS actuator and electric unit (control unit) detects a spin at drive wheels (rear wheels), it compares wheel speed signals from all 4 wheels. At this time, LH and RH rear brake fluid pre sure are controlled, while fuel being cut to engine and throttle valve being closed to reduce engine torque by the control unit. Further more, throttle position is continuously controlled to ensure the optimum engine torque at all times.
- During TCS operation, TCS informs driver of system operation by flashing VDC warning lamp.
- Electrical system diagnosis by CONSULT is available.

Component Parts Location

INFOID:0000000009361466

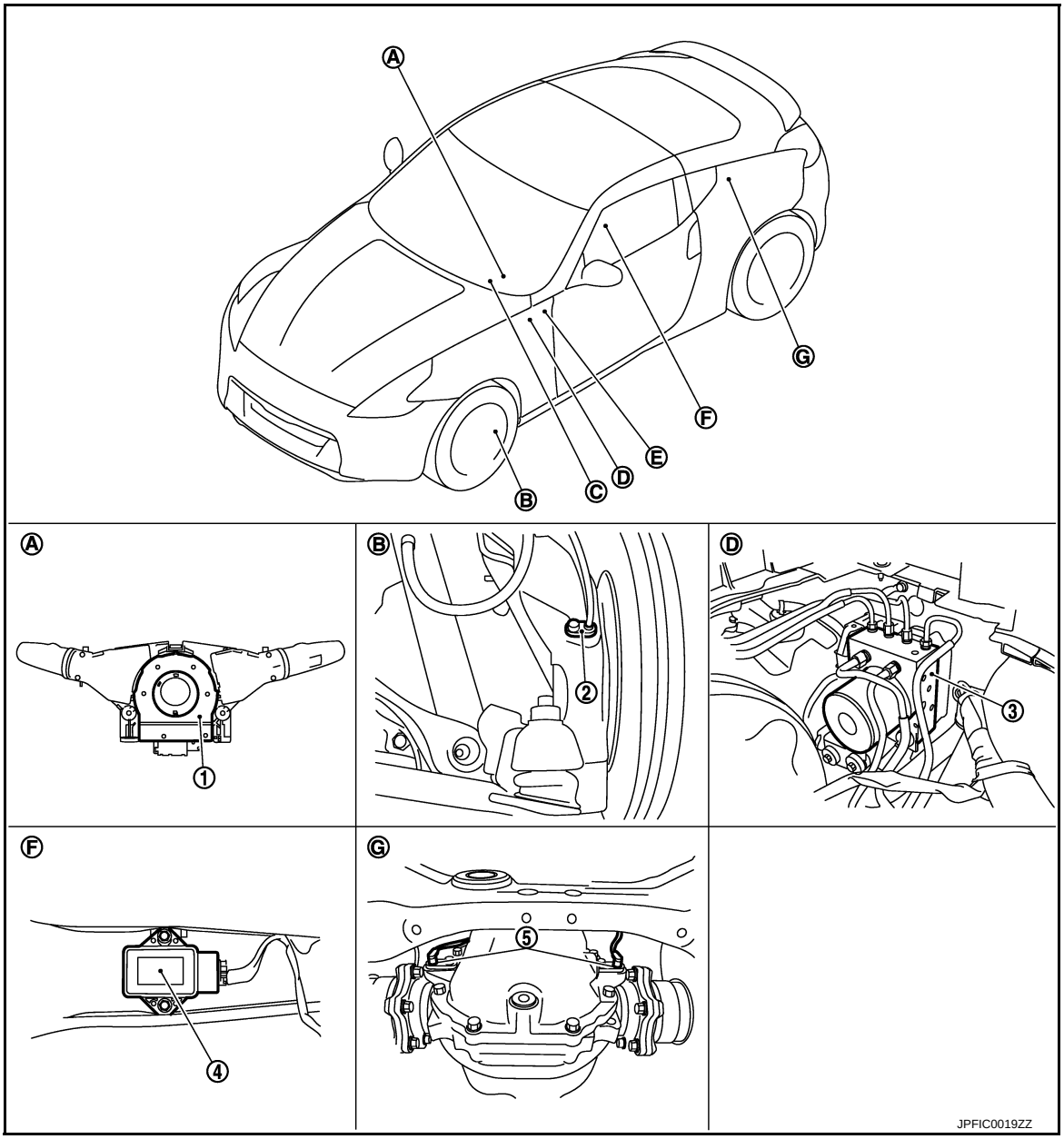

1. Steering angle sensor	2. Front wheel sensor	3. ABS actuator and electric unit (control unit)
4. Yaw rate/side G sensor	5. Rear wheel sensor	
A. Back of spiral cable assembly	B. Steering knuckle	C. ABS warning lamp, brake warning lamp, VDC OFF indicator lamp, VDC warning lamp: MWI-6, "METER SYSTEM : System Description"
D. Inside brake master cylinder cover	E. VDC OFF switch: IP-13, "Exploded View"	F. Under center console
G. Rear final drive assembly		

Component Description

INFOID:0000000009361467

Component parts		Reference
ABS actuator and electric unit (control unit)	Pump	BRC-38, "Description"
	Motor	
	Actuator relay	BRC-56, "Description"
	Solenoid valve	BRC-50, "Description", BRC-52, "Description"
	Pressure sensor	BRC-58, "Description"
	VDC switch-over valve (USV1, USV2, HSV1, HSV2)	BRC-66, "Description"
Wheel sensor		BRC-27, "Description"
Yaw rate/side G sensor		BRC-63, "Description"
Steering angle sensor		BRC-60, "Description"
VDC OFF switch		BRC-78, "Description"
ABS warning lamp		BRC-80, "Description"
Brake warning lamp		BRC-81, "Description"
VDC warning lamp		BRC-82, "Description"
VDC OFF indicator lamp		BRC-83, "Description"

ABS

System Diagram

INFOID:0000000009361468

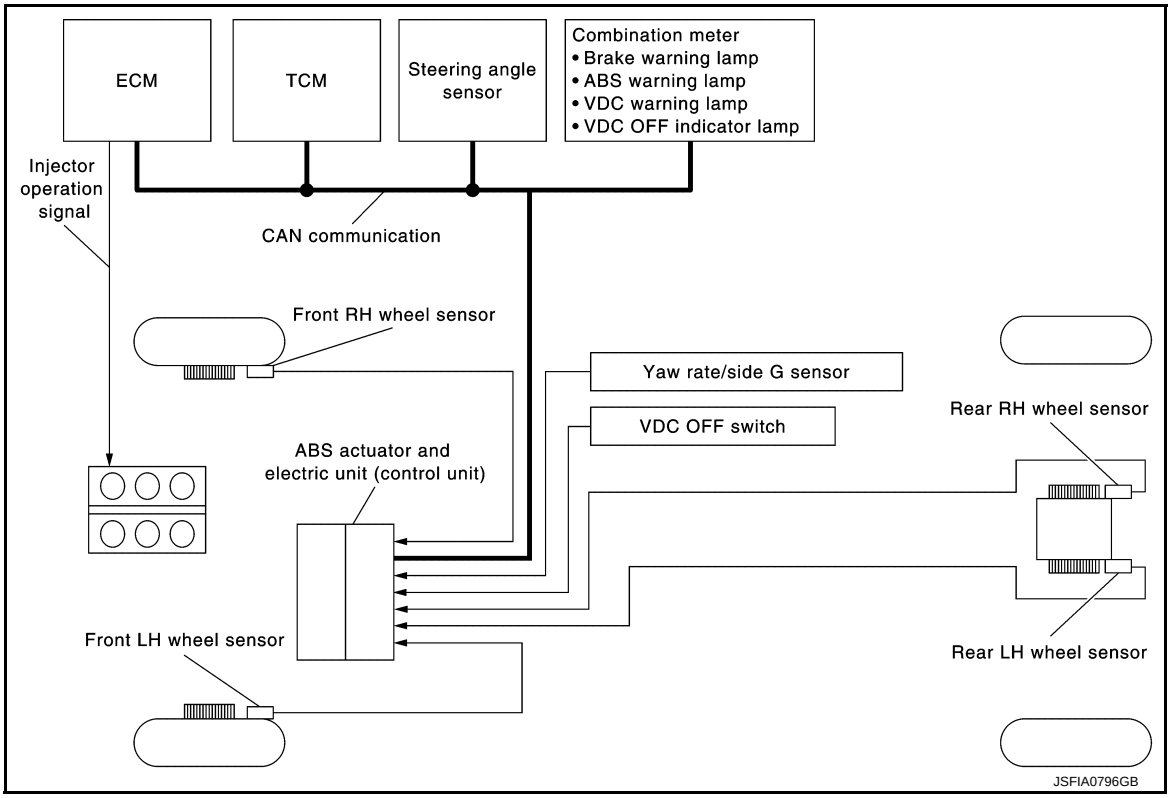

System Description

INFOID:0000000009361469

- Anti-Lock Braking System detects wheel revolution while braking, electronically controls braking force, and prevents wheel locking during sudden braking. It improves handling stability and maneuverability for avoiding obstacles.
- Electrical system diagnosis by CONSULT is available.

Component Parts Location

INFOID:0000000009361470

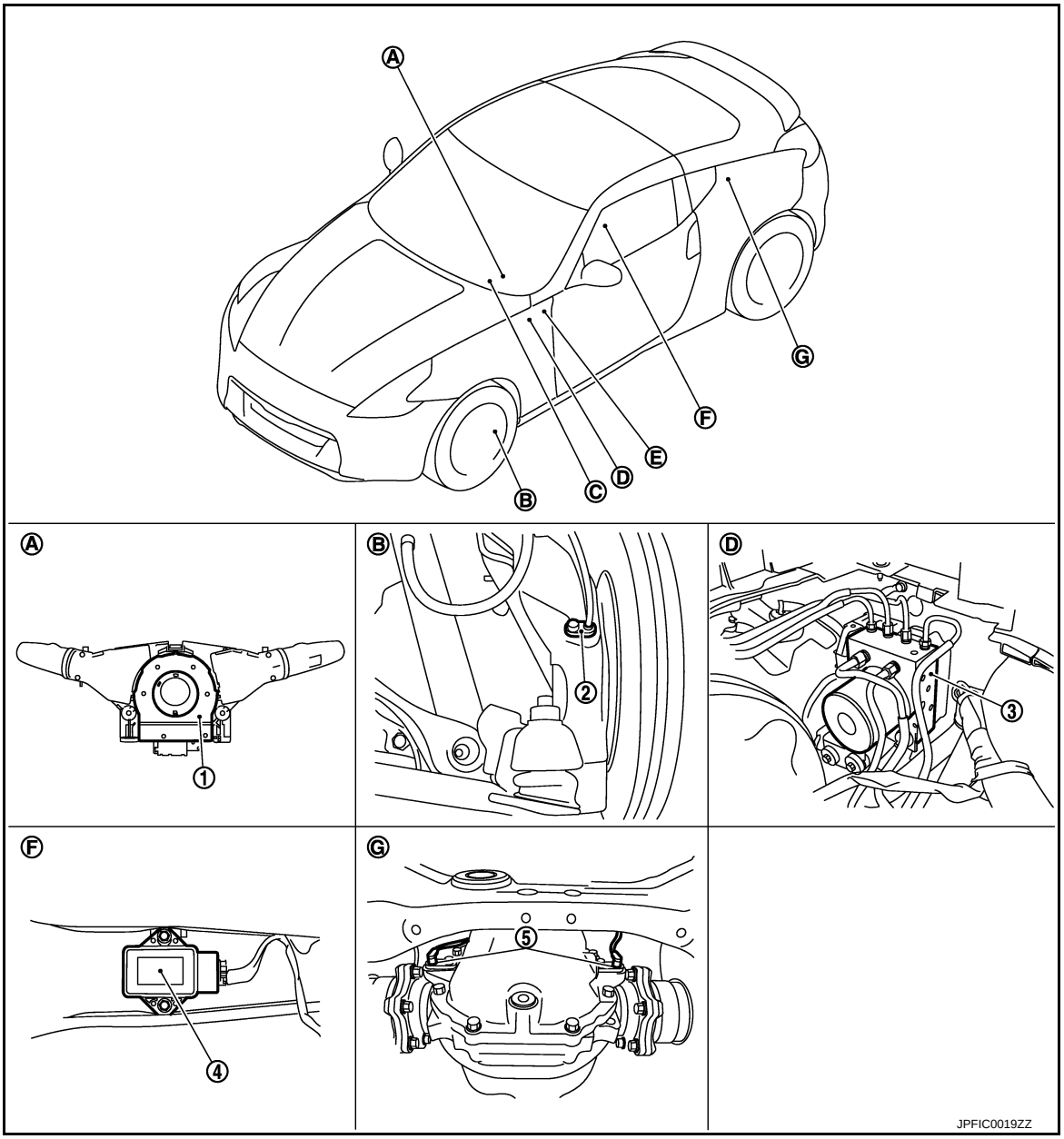

1. Steering angle sensor	2. Front wheel sensor	3. ABS actuator and electric unit (control unit)
4. Yaw rate/side G sensor	5. Rear wheel sensor	
A. Back of spiral cable assembly	B. Steering knuckle	C. ABS warning lamp, brake warning lamp, VDC OFF indicator lamp, VDC warning lamp: MWI-6, "METER SYSTEM : System Description"
D. Inside brake master cylinder cover	E. VDC OFF switch: IP-13, "Exploded View"	F. Under center console
G. Rear final drive assembly		

Component Description

INFOID:0000000009361471

Component parts		Reference
ABS actuator and electric unit (control unit)	Pump	BRC-38, "Description"
	Motor	
	Actuator relay	BRC-56, "Description"
	Solenoid valve	BRC-50, "Description", BRC-52, "Description"
	Pressure sensor	BRC-58, "Description"
	VDC switch-over valve (USV1, USV2, HSV1, HSV2)	BRC-66, "Description"
Wheel sensor		BRC-27, "Description"
Yaw rate/side G sensor		BRC-63, "Description"
Steering angle sensor		BRC-60, "Description"
VDC OFF switch		BRC-78, "Description"
ABS warning lamp		BRC-80, "Description"
Brake warning lamp		BRC-81, "Description"
VDC warning lamp		BRC-82, "Description"
VDC OFF indicator lamp		BRC-83, "Description"

EBD

System Diagram

INFOID:0000000009361472

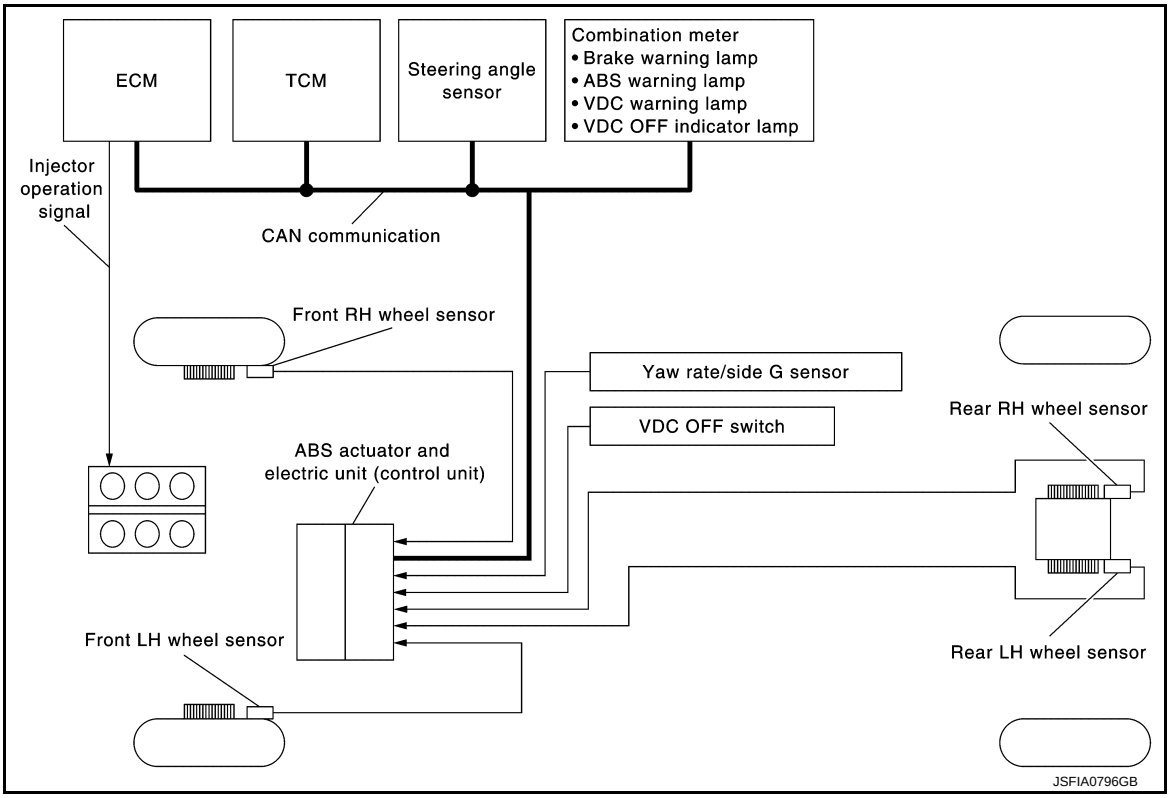

System Description

INFOID:0000000009361473

- Electric Brake force Distribution is a following function. ABS actuator and electric unit (control unit) detects subtle slippages between the front and rear wheels during braking. Then is electronically controls the rear braking force (brake fluid pressure) to reducing and reduces rear wheel slippage. Accordingly it improves vehicle stability.
- Electrical system diagnosis by CONSULT is available.

Component Parts Location

INFOID:0000000009361474

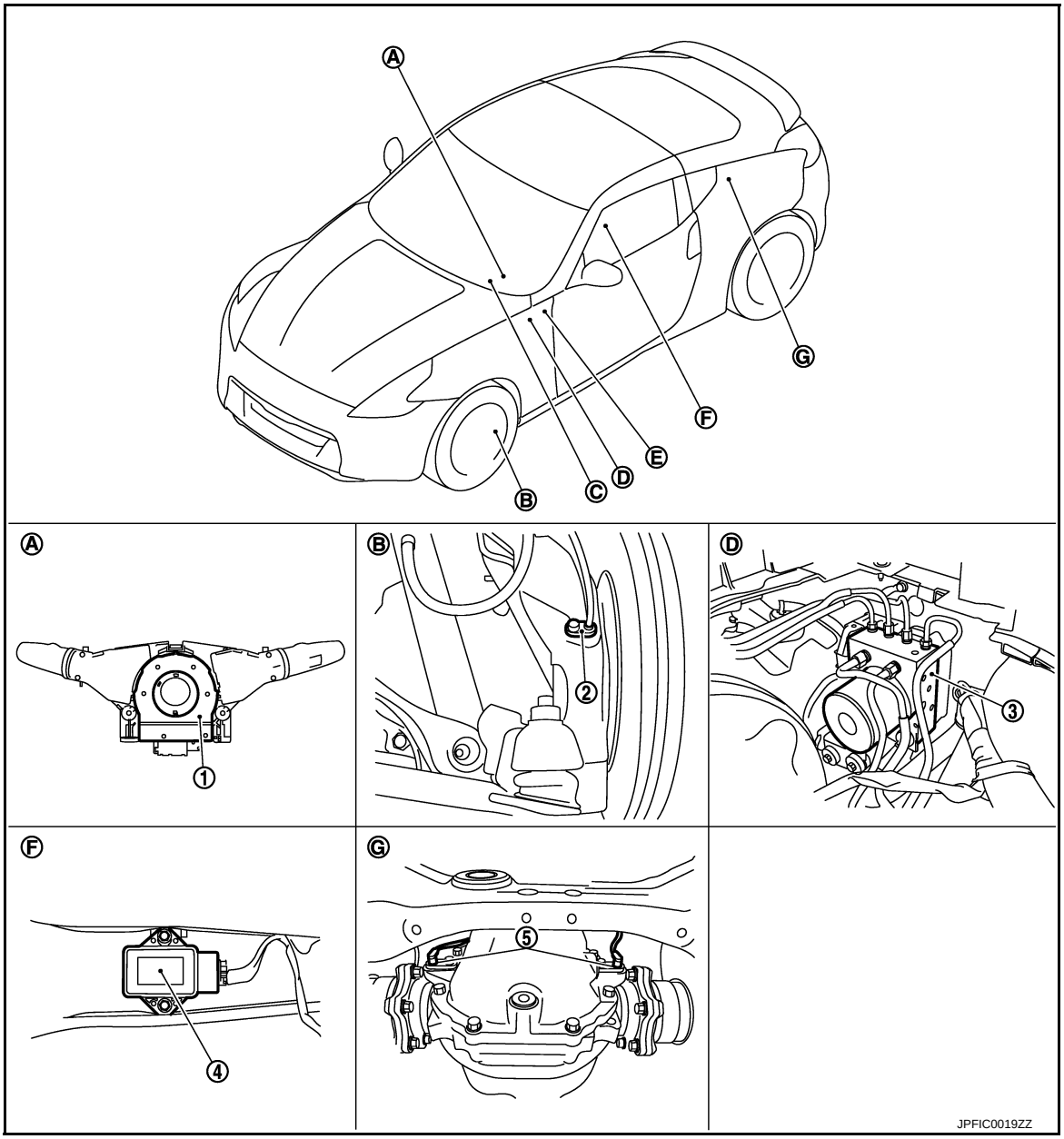

1. Steering angle sensor	2. Front wheel sensor	3. ABS actuator and electric unit (control unit)
4. Yaw rate/side G sensor	5. Rear wheel sensor	
A. Back of spiral cable assembly	B. Steering knuckle	C. ABS warning lamp, brake warning lamp, VDC OFF indicator lamp, VDC warning lamp: MWI-6, "METER SYSTEM : System Description"
D. Inside brake master cylinder cover	E. VDC OFF switch: IP-13, "Exploded View"	F. Under center console
G. Rear final drive assembly		

Component Description

INFOID:0000000009361475

Component parts		Reference
ABS actuator and electric unit (control unit)	Pump	BRC-38, "Description"
	Motor	
	Actuator relay	BRC-56, "Description"
	Solenoid valve	BRC-50, "Description", BRC-52, "Description"
	Pressure sensor	BRC-58, "Description"
	VDC switch-over valve (USV1, USV2, HSV1, HSV2)	BRC-66, "Description"
Wheel sensor		BRC-27, "Description"
Yaw rate/side G sensor		BRC-63, "Description"
Steering angle sensor		BRC-60, "Description"
VDC OFF switch		BRC-78, "Description"
ABS warning lamp		BRC-80, "Description"
Brake warning lamp		BRC-81, "Description"
VDC warning lamp		BRC-82, "Description"
VDC OFF indicator lamp		BRC-83, "Description"

DIAGNOSIS SYSTEM [ABS ACTUATOR AND ELECTRIC UNIT (CONTROL UNIT)]

CONSULT Function

INFOID:0000000009361476

FUNCTION

CONSULT can display each diagnostic item using the diagnostic test modes shown following.

Diagnostic test mode	Function
Work support	This mode enables a technician to adjust some devices faster and more accurately by following the indications on CONSULT.
Self diagnostic result	Self-diagnostic results can be read and erased quickly.
Data monitor	Input/Output data in the ABS actuator and electric unit (control unit) can be read.
Active test	CONSULT drives some actuators apart from ABS actuator and electric unit (control unit) and also shifts some parameters in a specified range.
ECU identification	ABS actuator and electric unit (control unit) part number can be read.

WORK SUPPORT

Item	Description
ST ANGLE SENSOR ADJUSTMENT	Adjust the neutral position of the steering angle sensor.

SELF DIAGNOSTIC RESULT

Operation Procedure

Before performing the self-diagnosis, start engine and drive vehicle at 30 km/h (19 MPH) or more for approximately 1 minute.

Display Item List

Refer to BRC-95, "DTC Index".

How to Erase Self-diagnosis Results

After erasing DTC memory for “ABS” with CONSULT, start the engine and drive the vehicle at 30 km/h (19 MPH) or more for approximately 1 minute as the final inspection, and make sure that the ABS warning lamp, VDC warning lamp and brake warning lamp turn OFF.

CAUTION:

If memory cannot be erased, perform applicable diagnosis.

NOTE:

- When the wheel sensor malfunctions, after inspecting the wheel sensor system, ABS warning lamp, VDC warning lamp and brake warning lamp will not turn OFF even when the system is normal unless the vehicle is driving at approximately 30 km/h (19 MPH) or more for approximately 1 minute.
- Brake warning lamp will turn ON in case of parking brake operation (when switch is ON) or in case of brake fluid level switch operation (when brake fluid is insufficient).
- VDC OFF switch should not stay “ON” position.

DATA MONITOR MODE

Display Item List

NOTE:

The following table includes information (items) inapplicable to this vehicle. For information (items) applicable to this vehicle, refer to CONSULT display items.

×: Applicable ▼: Optional item

Monitor item (Unit)	SELECT MONITOR ITEM		Remarks
	ECU INPUT SIGNALS	MAIN SIGNALS	
FR LH SENSOR [km/h (MPH)]	×	×	Wheel speed
FR RH SENSOR [km/h (MPH)]	×	×	
RR LH SENSOR [km/h (MPH)]	×	×	
RR RH SENSOR [km/h (MPH)]	×	×	
FR RH IN SOL (On/Off) (Note)	▼	×	Operation status of each solenoid valve
FR RH OUT SOL (On/Off) (Note)	▼	×	
FR LH IN SOL (On/Off) (Note)	▼	×	
FR LH OUT SOL (On/Off) (Note)	▼	×	
RR RH IN SOL (On/Off) (Note)	▼	×	
RR RH OUT SOL (On/Off) (Note)	▼	×	
RR LH IN SOL (On/Off) (Note)	▼	×	
RR LH OUT SOL (On/Off) (Note)	▼	×	
STOP LAMP SW (On/Off)	×	×	Stop lamp switch signal status
MOTOR RELAY (On/Off)	▼	×	Motor and motor relay operation
ACTUATOR RLY (On/Off) (Note)	▼	×	Actuator relay operation
ABS WARN LAMP (On/Off)	▼	×	ABS warning lamp
OFF LAMP (On/Off)	▼	×	VDC OFF indicator lamp
OFF SW (On/Off)	×	×	VDC OFF switch
SLIP/VDC LAMP (On/Off)	▼	×	VDC warning lamp
BATTERY VOLT (V)	×	×	Battery voltage supplied to the ABS actuator and electric unit (control unit)
YAW RATE SEN (d/s)	×	×	Yaw rate detected by yaw rate/side G sensor
ACCEL POS SIG (%)	×	▼	Throttle actuator opening/closing is displayed (Linked with accelerator pedal)
SIDE G-SENSOR (m/s^2)	×	▼	Transverse G detected by yaw rate/side G sensor
STR ANGLE SIG (°)	×	▼	Steering angle detected by steering angle sensor
PRESS SENSOR (bar)	×	▼	Brake fluid pressure detected by pressure sensor

Monitor item (Unit)	SELECT MONITOR ITEM		Remarks
	ECU INPUT SIGNALS	MAIN SIGNALS	
EBD SIGNAL (On/Off)	▼	▼	EBD operation
ABS SIGNAL (On/Off)	▼	▼	ABS operation
TCS SIGNAL (On/Off)	▼	▼	TCS operation
VDC SIGNAL (On/Off)	▼	▼	VDC operation
EBD FAIL SIG (On/Off)	▼	▼	EBD fail-safe signal
ABS FAIL SIG (On/Off)	▼	▼	ABS fail-safe signal
TCS FAIL SIG (On/Off)	▼	▼	TCS fail-safe signal
VDC FAIL SIG (On/Off)	▼	▼	VDC fail-safe signal
CRANKING SIG (On/Off)	▼	▼	Crank operation
FLUID LEV SW (On/Off)	×	▼	Brake fluid level switch signal status
PARK BRAKE SW (On/Off)	×	▼	Parking brake switch signal status
USV [FR-RL] (On/Off)	▼	▼	VDC switch-over valve
USV [FL-RR] (On/Off)	▼	▼	
HSV [FR-RL] (On/Off)	▼	▼	
HSV [FL-RR] (On/Off)	▼	▼	
V/R OUTPUT (On/Off)	▼	▼	Solenoid valve relay activated
M/R OUTPUT (On/Off)	▼	▼	Actuator motor and motor relay activated
ENGINE RPM [tr/min (rpm)]	×	▼	Engine speed

NOTE:
A brief moment of On/Off condition occurs every 20 seconds after ignition switch turned ON. This is not malfunction because it is a operation for checking.

ACTIVE TEST MODE

CAUTION:
- **Never perform active test while driving vehicle.**
- **Make sure to completely bleed air from brake system.**
- **The active test cannot be started when ABS warning lamp, VDC warning lamp and brake warning lamp are ON.**
- **ABS warning lamp, VDC warning lamp and brake warning lamp are ON during active test.**

NOTE:
- When active test is performed while depressing the pedal, the pedal depression amount will change. This is normal. (Only solenoid valve and ABS motor.)
- “TEST IS STOPPED” is displayed 10 seconds after operation start.
- After “TEST IS STOPPED” is displayed, to perform test again.

Test Item

ABS SOLENOID VALVE

- Select “Up”, “Keep” and “Down”. Then use screen monitor to check that solenoid valve operates as shown in the table below.

Test item	Display item	Display (Note)		
		Up	Keep	Down
FR RH SOL	FR RH IN SOL	Off	On	On
	FR RH OUT SOL	Off	Off	On*
	USV[FR-RL]	Off	Off	Off
	HSV[FR-RL]	Off	Off	Off
FR LH SOL	FR LH IN SOL	Off	On	On
	FR LH OUT SOL	Off	Off	On*
	USV[FL-RR]	Off	Off	Off
	HSV[FL-RR]	Off	Off	Off
RR RH SOL	RR RH IN SOL	Off	On	On
	RR RH OUT SOL	Off	Off	On*
	USV[FL-RR]	Off	Off	Off
	HSV[FL-RR]	Off	Off	Off
RR LH SOL	RR LH IN SOL	Off	On	On
	RR LH OUT SOL	Off	Off	On*
	USV[FR-RL]	Off	Off	Off
	HSV[FR-RL]	Off	Off	Off

*: On for 1 to 2 seconds after the select, and then Off.

NOTE:

A brief moment of On/Off condition occurs every 20 seconds after ignition switch turned ON. This is not malfunction because it is an operation for checking.

ABS SOLENOID VALVE (ACT)

- Select “Up”, “ACT UP” and “ACT KEEP”. Then use screen monitor to check that solenoid valve operates as shown in the table below.

Test item	Display item	Display (Note)		
		Up	ACT UP	ACT KEEP
FR RH ABS SOLENOID (ACT)	FR RH IN SOL	Off	Off	Off
	FR RH OUT SOL	Off	Off	Off
	USV[FR-RL]	Off	On	On
	HSV[FR-RL]	Off	On*	Off
FR LH ABS SOLENOID (ACT)	FR LH IN SOL	Off	Off	Off
	FR LH OUT SOL	Off	Off	Off
	USV[FL-RR]	Off	On	On
	HSV[FL-RR]	Off	On*	Off
RR RH ABS SOLENOID (ACT)	RR RH IN SOL	Off	Off	Off
	RR RH OUT SOL	Off	Off	Off
	USV[FL-RR]	Off	On	On
	HSV[FL-RR]	Off	On*	Off

Test item	Display item	Display (Note)		
		Up	ACT UP	ACT KEEP
RR LH ABS SOLENOID (ACT)	RR LH IN SOL	Off	Off	Off
	RR LH OUT SOL	Off	Off	Off
	USV[FR-RL]	Off	On	On
	HSV[FR-RL]	Off	On*	Off

*: On for 1 to 2 seconds after the touch, and then Off.

NOTE:

A brief moment of On/Off condition occurs every 20 seconds after ignition switch turned ON. This is not malfunction because it is an operation for checking.

ABS MOTOR

- Select “On” and “Off” of “ACTIVE TEST”. Make sure motor relay and actuator relay operates as shown in table below.

Test item	Display item	Display	
		On	Off
ABS MOTOR	MOTOR RELAY	On	Off
	ACTUATOR RLY (Note)	On	On

NOTE:

A brief moment of On/Off condition occurs every 20 seconds after ignition switch turned ON. This is not malfunction because it is an operation for checking.

ECU IDENTIFICATION

ABS actuator and electric unit (control unit) part number can be read.

DTC/CIRCUIT DIAGNOSIS

C1101, C1102, C1103, C1104 WHEEL SENSOR

Description

INFOID:0000000009361477

When the sensor rotor rotates, the magnetic field changes. It converts the magnetic field changes to current signals (rectangular wave) and transmits them to the ABS actuator and electric unit (control unit).

DTC Logic

INFOID:0000000009361478

DTC DETECTION LOGIC

DTC	Display item	Malfunction detected condition	Possible cause
C1101	RR RH SENSOR-1	Circuit of rear RH wheel sensor is open. Or when the sensor power voltage is outside the standard.	• Harness or connector • Wheel sensor • ABS actuator and electric unit (control unit)
C1102	RR LH SENSOR-1	Circuit of rear LH wheel sensor is open. Or when the sensor power voltage is outside the standard.	
C1103	FR RH SENSOR-1	Circuit of front RH wheel sensor is open. Or when the sensor power voltage is outside the standard.	
C1104	FR LH SENSOR-1	Circuit of front LH wheel sensor is open. Or when the sensor power voltage is outside the standard.	

DTC CONFIRMATION PROCEDURE

1. PRECONDITIONING

If “DTC CONFIRMATION PROCEDURE” has been previously conducted, always turn the ignition switch OFF and wait at least 10 seconds before conducting the next test.

>> GO TO 2.

2. DTC REPRODUCTION PROCEDURE

1. Start the engine and drive the vehicle at 30 km/h (19 MPH) or more for approximately 1 minute.
2. Perform self-diagnosis for “ABS” with CONSULT.

Is DTC “C1101”, “C1102”, “C1103” or “C1104” detected?

YES >> Proceed to diagnosis procedure. Refer to BRC-27, "Diagnosis Procedure".
NO >> INSPECTION END

Diagnosis Procedure

INFOID:0000000009361479

CAUTION:
Never check between wheel sensor harness connector terminals.

1. CHECK WHEEL SENSOR

1. Turn the ignition switch OFF.
2. Check the wheel sensor for damage.

Is the inspection result normal?

YES >> GO TO 3.
NO >> GO TO 2.

2. REPLACE WHEEL SENSOR (1)

1. Replace wheel sensor.
- Front: Refer to BRC-109, "FRONT WHEEL SENSOR : Exploded View".
- Rear: Refer to BRC-110, "REAR WHEEL SENSOR : Exploded View".
2. Erase self-diagnosis result for “ABS”.
3. Turn the ignition switch OFF, and wait 10 seconds or more.
4. Start the engine.
5. Drive the vehicle at approx. 30 km/h (19 MPH) or more for approx. 1 minute.
6. Stop the vehicle.

7. Perform self-diagnosis for “ABS” with CONSULT.

Is DTC “C1101”, “C1102”, “C1103” or “C1104” detected?

YES >> GO TO 3.
NO >> INSPECTION END

3. CHECK CONNECTOR

1. Turn the ignition switch OFF.
2. Check the ABS actuator and electric unit (control unit) harness connector for disconnection or looseness.
3. Check the wheel sensor harness connector for disconnection or looseness.

Is the inspection result normal?

YES >> GO TO 5.
NO >> Repair or replace error-detected parts, securely lock the connector, and GO TO 4.

4. PERFORM SELF-DIAGNOSIS (1)

1. Erase self-diagnosis result for “ABS” with CONSULT.
2. Turn the ignition switch OFF, and wait 10 seconds or more.
3. Start the engine.
4. Drive the vehicle at approx. 30 km/h (19 MPH) or more for approx. 1 minute.
5. Stop the vehicle.
6. Perform self-diagnosis for “ABS” with CONSULT.

Is DTC “C1101”, “C1102”, “C1103” or “C1104” detected?

YES >> GO TO 5.
NO >> INSPECTION END

5. CHECK TERMINAL

1. Turn the ignition switch OFF.
2. Disconnect ABS actuator and electric unit (control unit) harness connector and then check the ABS actuator and electric unit (control unit) pin terminals for damage or loose connection with harness connector.
3. Disconnect wheel sensor harness connector and check the each wheel sensor pin terminals for damage or loose connection with harness connector.

Is the inspection result normal?

YES >> GO TO 7.
NO >> Repair or replace error-detected parts and GO TO 6.

6. PERFORM SELF-DIAGNOSIS (2)

1. Connect ABS actuator and electric unit (control unit) harness connector.
2. Connect wheel sensor harness connector.
3. Erase self-diagnosis result for “ABS”.
4. Turn the ignition switch OFF, and wait 10 seconds or more.
5. Start the engine.
6. Drive the vehicle at approx. 30 km/h (19 MPH) or more for approx. 1 minute.
7. Stop the vehicle.
8. Perform self-diagnosis for “ABS” with CONSULT.

Is DTC “C1101”, “C1102”, “C1103” or “C1104” detected?

YES >> GO TO 7.
NO >> INSPECTION END

7. CHECK WHEEL SENSOR HARNESS

1. Turn the ignition switch OFF.
2. Disconnect ABS actuator and electric unit (control unit) harness connector.
3. Disconnect wheel sensor harness connector.
4. Check the continuity between ABS actuator and electric unit (control unit) harness connector and wheel sensor harness connector. (Check the continuity when steering wheel is steered to RH and LH, or center harness in wheel housing is moved.)

Measurement connector and terminal for power supply circuit

ABS actuator and electric unit (control unit)		Wheel sensor		Continuity
Connector	Terminal	Connector	Terminal	
E41	26	E60 (Front LH wheel)	1	Existed
	9	E27 (Front RH wheel)		
	6	B34 (Rear LH wheel)		
	7	B33 (Rear RH wheel)		

Measurement connector and terminal for signal circuit

ABS actuator and electric unit (control unit)		Wheel sensor		Continuity
Connector	Terminal	Connector	Terminal	
E41	5	E60 (Front LH wheel)	2	Existed
	10	E27 (Front RH wheel)		
	27	B34 (Rear LH wheel)		
	29	B33 (Rear RH wheel)		

Is the inspection result normal?

YES >> GO TO 9.
NO >> Repair or replace error-detected parts and GO TO 8.

8. PERFORM SELF-DIAGNOSIS (3)

1. Connect ABS actuator and electric unit (control unit) harness connector.
2. Connect wheel sensor harness connector.
3. Erase self-diagnosis result for “ABS”.
4. Turn the ignition switch OFF, and wait 10 seconds or more.
5. Start the engine.
6. Drive the vehicle at approx. 30 km/h (19 MPH) or more for approx. 1 minute.
7. Stop the vehicle.
8. Perform self-diagnosis for “ABS” with CONSULT.

Is DTC “C1101”, “C1102”, “C1103” or “C1104” detected?

YES >> GO TO 9.
NO >> INSPECTION END

9. REPLACE WHEEL SENSOR

1. Replace wheel sensor.
- Front: Refer to BRC-109, "FRONT WHEEL SENSOR : Exploded View".
- Rear: Refer to BRC-110, "REAR WHEEL SENSOR : Exploded View".
2. Erase self-diagnosis result for “ABS” with CONSULT.
3. Turn the ignition switch OFF, and wait 10 seconds or more.
4. Start the engine.
5. Drive the vehicle at approx. 30 km/h (19 MPH) or more for approx. 1 minute.
6. Stop the vehicle.
7. Perform self-diagnosis for “ABS” with CONSULT.

Is DTC “C1101”, “C1102”, “C1103” or “C1104” detected?

YES >> Replace ABS actuator and electric unit (control unit). Refer to BRC-112, "Exploded View".
NO >> INSPECTION END

Special Repair Requirement

INFOID:0000000009361480

1. ADJUSTMENT OF STEERING ANGLE SENSOR NEUTRAL POSITION

Always perform the neutral position adjustment for the steering angle sensor, when replacing the ABS actuator and electric unit (control unit) or steering angle sensor and removing steering angle sensor. Refer to BRC-8, "ADJUSTMENT OF STEERING ANGLE SENSOR NEUTRAL POSITION : Special Repair Requirement"

>> END

C1105, C1106, C1107, C1108 WHEEL SENSOR

Description

INFOID:0000000009361481

When the sensor rotor rotates, the magnetic field changes. It converts the magnetic field changes to current signals (rectangular wave) and transmits them to the ABS actuator and electric unit (control unit).

DTC Logic

INFOID:0000000009361482

DTC DETECTION LOGIC

DTC	Display item	Malfunction detected condition	Possible cause
C1105	RR RH SENSOR-2	When the circuit in the rear RH wheel sensor is short-circuited. Or when the distance between the wheel sensor and sensor rotor is too large and the sensor pulse cannot be recognized by the control unit.	• Harness or connector • Wheel sensor • ABS actuator and electric unit (control unit)
C1106	RR LH SENSOR-2	When the circuit in the rear LH wheel sensor is short-circuited. Or when the distance between the wheel sensor and sensor rotor is too large and the sensor pulse cannot be recognized by the control unit.	
C1107	FR RH SENSOR-2	When the circuit in the front RH wheel sensor is short-circuited. Or when the distance between the wheel sensor and sensor rotor is too large and the sensor pulse cannot be recognized by the control unit.	
C1108	FR LH SENSOR-2	When the circuit in the front LH wheel sensor is short-circuited. Or when the distance between the wheel sensor and sensor rotor is too large and the sensor pulse cannot be recognized by the control unit.	

DTC CONFIRMATION PROCEDURE

1. PRECONDITIONING

If “DTC CONFIRMATION PROCEDURE” has been previously conducted, always turn the ignition switch OFF and wait at least 10 seconds before conducting the next test.

>> GO TO 2.

2. DTC REPRODUCTION PROCEDURE

1. Start the engine and drive the vehicle at 30 km/h (19 MPH) or more for approximately 1 minute.
2. Perform self-diagnosis for “ABS” with CONSULT.

Is DTC “C1105”, “C1106”, “C1107” or “C1108” detected?

YES >> Proceed to diagnosis procedure. Refer to BRC-30, "Diagnosis Procedure".
NO >> INSPECTION END

Diagnosis Procedure

INFOID:0000000009361483

CAUTION:
Never check between wheel sensor harness connector terminals.

1. CHECK ABS ACTUATOR AND ELECTRIC UNIT (CONTROL UNIT) POWER SUPPLY SYSTEM

Check the ABS actuator and electric unit (control unit) power supply system. Refer to BRC-74, "Diagnosis Procedure".

Is the inspection result normal?

YES >> GO TO 2.
NO >> Repair or replace error-detected parts.

2. CHECK TIRE

1. Turn the ignition switch OFF.
2. Check the tire air pressure, wear and size. Refer to WT-54, "Tire Air Pressure".

Is the inspection result normal?

YES >> GO TO 5.
NO >> Adjust air pressure or replace tire and GO TO 3.

3. CHECK DATA MONITOR (1)

1. Erase self-diagnosis result for “ABS” with CONSULT.
2. Turn the ignition switch OFF, and wait 10 seconds or more.
3. Start the engine.
4. Select “ABS” and “DATA MONITOR”, check the “FR LH SENSOR”, “FR RH SENSOR”, “RR LH SENSOR” and “RR RH SENSOR” with CONSULT.
   NOTE:
   Set the “DATA MONITOR” recording speed to “10 msec”.
5. Read a value (wheel speed) of both normal wheel sensors and error-detecting wheel sensor.

Regarding the deference at 30 km/h (19 MPH) between the wheel speed detected by the error detecting wheel sensor and the maximum/minimum wheel speed detected by the normal wheel sensors, is the difference within 5%, respectively?

YES >> GO TO 4.
NO >> GO TO 5.

4. PERFORM SELF-DIAGNOSIS (1)

1. Drive the vehicle at approx. 30 km/h (19 MPH) or more for approx. 1 minute.
2. Stop the vehicle.
3. Perform self-diagnosis for “ABS” with CONSULT.

Is DTC “C1105”, “C1106”, “C1107” or “C1108” detected?

YES >> GO TO 5.
NO >> INSPECTION END

5. CHECK WHEEL SENSOR

1. Turn the ignition switch OFF.
2. Check the wheel sensor for damage.
3. Remove dust and foreign matter adhered to the sensor rotor with a vacuum dust collector through the wheel sensor mounting hole.
   CAUTION:
   Install wheel sensor with no backlash and float, and tighten the mounting bolt to the specified torque.
   - **Front: Refer to BRC-109, "FRONT WHEEL SENSOR : Exploded View".**
   - **Rear: Refer to BRC-110, "REAR WHEEL SENSOR : Exploded View".**

Is the inspection result normal?

YES >> GO TO 8.
NO >> GO TO 6.

6. REPLACE WHEEL SENSOR (1)

1. Replace wheel sensor.
- Front: Refer to BRC-109, "FRONT WHEEL SENSOR : Exploded View".
- Rear: Refer to BRC-110, "REAR WHEEL SENSOR : Exploded View".
2. Erase self-diagnosis result for “ABS” with CONSULT.
3. Turn the ignition switch OFF, and wait 10 seconds or more.
4. Start the engine.
5. Select “ABS” and “DATA MONITOR”, check the “FR LH SENSOR”, “FR RH SENSOR”, “RR LH SENSOR” and “RR RH SENSOR” with CONSULT.
   NOTE:
   Set the “DATA MONITOR” recording speed to “10 msec”.
6. Read a value (wheel speed) of both normal wheel sensors and error-detecting wheel sensor.

Regarding the deference at 30 km/h (19 MPH) between the wheel speed detected by the error detecting wheel sensor and the maximum/minimum wheel speed detected by the normal wheel sensors, is the difference within 5%, respectively?

YES >> GO TO 7.
NO >> GO TO 19.

7. PERFORM SELF-DIAGNOSIS (2)

1. Drive the vehicle at approx. 30 km/h (19 MPH) or more for approx. 1 minute.
2. Stop the vehicle.
3. Perform self-diagnosis for “ABS” with CONSULT.

Is DTC “C1105”, “C1106”, “C1107” or “C1108” detected?

YES >> GO TO 19.
NO >> INSPECTION END

8. CHECK CONNECTOR

1. Turn the ignition switch OFF.
2. Check the ABS actuator and electric unit (control unit) harness connector for disconnection or looseness.
3. Check the wheel sensor harness connector for disconnection or looseness.

Is the inspection result normal?

YES >> GO TO 11.
NO >> Repair or replace error-detected parts, securely lock the connector, and GO TO 9.

9. CHECK DATA MONITOR (2)

1. Erase self-diagnosis result for “ABS” with CONSULT.
2. Turn the ignition switch OFF, and wait 10 seconds or more.
3. Start the engine.
4. Select “ABS” and “DATA MONITOR”, check the “FR LH SENSOR”, “FR RH SENSOR”, “RR LH SENSOR” and “RR RH SENSOR” with CONSULT.
   NOTE:
   Set the “DATA MONITOR” recording speed to “10 msec”.
5. Read a value (wheel speed) of both normal wheel sensors and error-detecting wheel sensor.

Regarding the deference at 30 km/h (19 MPH) between the wheel speed detected by the error detecting wheel sensor and the maximum/minimum wheel speed detected by the normal wheel sensors, is the difference within 5%, respectively?

YES >> GO TO 10.
NO >> GO TO 11.

10. PERFORM SELF-DIAGNOSIS (3)

1. Drive the vehicle at approx. 30 km/h (19 MPH) or more for approx. 1 minute.
2. Stop the vehicle.
3. Perform self-diagnosis for “ABS” with CONSULT.

Is DTC “C1105”, “C1106”, “C1107” or “C1108” detected?

YES >> GO TO 11.
NO >> INSPECTION END

11. CHECK TERMINAL

1. Turn the ignition switch OFF.
2. Disconnect ABS actuator and electric unit (control unit) harness connector and then check the ABS actuator and electric unit (control unit) pin terminals for damage or loose connection with harness connector.
3. Disconnect wheel sensor harness connector and check the each wheel sensor pin terminals for damage or loose connection with harness connector.

Is the inspection result normal?

YES >> GO TO 14.
NO >> Repair or replace error-detected parts and GO TO 12.

12. CHECK DATA MONITOR (3)

1. Connect ABS actuator and electric unit (control unit) harness connector.
2. Connect wheel sensor harness connector.
3. Erase self-diagnosis result for “ABS” with CONSULT.
4. Turn the ignition switch OFF, and wait 10 seconds or more.
5. Start the engine.
6. Select “ABS” and “DATA MONITOR”, check the “FR LH SENSOR”, “FR RH SENSOR”, “RR LH SENSOR” and “RR RH SENSOR” with CONSULT.
   NOTE:

Set the “DATA MONITOR” recording speed to “10 msec”.
7. Read a value (wheel speed) of both normal wheel sensors and error-detecting wheel sensor.

Regarding the deference at 30 km/h (19 MPH) between the wheel speed detected by the error detecting wheel sensor and the maximum/minimum wheel speed detected by the normal wheel sensors, is the difference within 5%, respectively?

YES >> GO TO 13.
NO >> GO TO 14.

13. PERFORM SELF-DIAGNOSIS (4)

1. Drive the vehicle at approx. 30 km/h (19 MPH) or more for approx. 1 minute.
2. Stop the vehicle.
3. Perform self-diagnosis for “ABS” with CONSULT.

Is DTC “C1105”, “C1106”, “C1107” or “C1108” detected?

YES >> GO TO 14.
NO >> INSPECTION END

14. CHECK WHEEL SENSOR HARNESS

1. Turn the ignition switch OFF.
2. Disconnect ABS actuator and electric unit (control unit) harness connector.
3. Disconnect wheel sensor harness connector.
4. Check the continuity between ABS actuator and electric unit (control unit) harness connector and the ground.

ABS actuator and electric unit (control unit)		—	Continuity
Connector	Terminal		
E41	26, 5	Ground	Not existed
	9, 10		
	6, 27		
	7, 29		

Is the inspection result normal?

YES >> GO TO 15.
NO >> Repair or replace error-detected parts and GO TO 15.

15. CHECK DATA MONITOR (4)

1. Connect ABS actuator and electric unit (control unit) harness connector.
2. Connect wheel sensor harness connector.
3. Erase self-diagnosis result for “ABS” with CONSULT.
4. Turn the ignition switch OFF, and wait 10 seconds or more.
5. Start the engine.
6. Select “ABS” and “DATA MONITOR”, check the “FR LH SENSOR”, “FR RH SENSOR”, “RR LH SENSOR” and “RR RH SENSOR” with CONSULT.
   NOTE:
   Set the “DATA MONITOR” recording speed to “10 msec”.
7. Read a value (wheel speed) of both normal wheel sensors and error-detecting wheel sensor.

Regarding the deference at 30 km/h (19 MPH) between the wheel speed detected by the error detecting wheel sensor and the maximum/minimum wheel speed detected by the normal wheel sensors, is the difference within 5%, respectively?

YES >> GO TO 16.
NO >> GO TO 17.

16. PERFORM SELF-DIAGNOSIS (5)

1. Drive the vehicle at approx. 30 km/h (19 MPH) or more for approx. 1 minute.
2. Stop the vehicle.
3. Perform self-diagnosis for “ABS” with CONSULT.

Is DTC “C1105”, “C1106”, “C1107” or “C1108” detected?

YES >> GO TO 17.

NO >> INSPECTION END

17. REPLACE WHEEL SENSOR

1. Replace wheel sensor.
- Front: Refer to BRC-109, "FRONT WHEEL SENSOR : Exploded View".
- Rear: Refer to BRC-110, "REAR WHEEL SENSOR : Exploded View".
2. Erase self-diagnosis result for “ABS” with CONSULT.
3. Turn the ignition switch OFF, and wait 10 seconds or more.
4. Start the engine.
5. Select “ABS” and “DATA MONITOR”, check the “FR LH SENSOR”, “FR RH SENSOR”, “RR LH SENSOR” and “RR RH SENSOR” with CONSULT.
   NOTE:
   Set the “DATA MONITOR” recording speed to “10 msec”.
6. Read a value (wheel speed) of both normal wheel sensors and error-detecting wheel sensor.

Regarding the deference at 30 km/h (19 MPH) between the wheel speed detected by the error detecting wheel sensor and the maximum/minimum wheel speed detected by the normal wheel sensors, is the difference within 5%, respectively?

YES >> GO TO 18.
NO >> GO TO 19.

18. PERFORM SELF-DIAGNOSIS (6)

1. Drive the vehicle at approx. 30 km/h (19 MPH) or more for approx. 1 minute.
2. Stop the vehicle.
3. Perform self-diagnosis for “ABS” with CONSULT.

Is DTC “C1105”, “C1106”, “C1107” or “C1108” detected?

YES >> GO TO 19.
NO >> INSPECTION END

19. REPLACE SENSOR ROTOR

1. Replace sensor rotor.
- Front: Refer to BRC-111, "FRONT SENSOR ROTOR : Exploded View".
- Rear: Refer to BRC-111, "REAR SENSOR ROTOR : Exploded View".
2. Erase self-diagnosis result for “ABS” with CONSULT.
3. Turn the ignition switch OFF, and wait 10 seconds or more.
4. Start the engine.
5. Drive the vehicle at approx. 30 km/h (19 MPH) or more for approx. 1 minute.
6. Stop the vehicle.
7. Perform self-diagnosis for “ABS” with CONSULT.

Is DTC “C1105”, “C1106”, “C1107” or “C1108” detected?

YES >> Replace ABS actuator and electric unit (control unit). Refer to BRC-112, "Exploded View".
NO >> INSPECTION END

Special Repair Requirement

INFOID:0000000009361484

1. ADJUSTMENT OF STEERING ANGLE SENSOR NEUTRAL POSITION

Always perform the neutral position adjustment for the steering angle sensor, when replacing the ABS actuator and electric unit (control unit) or steering angle sensor and removing steering angle sensor. Refer to BRC-8, "ADJUSTMENT OF STEERING ANGLE SENSOR NEUTRAL POSITION : Special Repair Requirement"

>> END

C1109 POWER AND GROUND SYSTEM

Description

INFOID:0000000009361485

Supplies electric power to the ABS actuator and electric unit (control unit).

DTC Logic

INFOID:0000000009361486

DTC DETECTION LOGIC

DTC	Display item	Malfunction detected condition	Possible cause
C1109	BATTERY VOLTAGE [ABNORMAL]	When the ABS actuator and electric unit (control unit) power supply voltage is lower than normal.	• Harness or connector • ABS actuator and electric unit (control unit) • IPDM E/R

DTC CONFIRMATION PROCEDURE

1. PRECONDITIONING

If “DTC CONFIRMATION PROCEDURE” has been previously conducted, always turn the ignition switch OFF and wait at least 10 seconds before conducting the next test.

>> GO TO 2.

2. DTC REPRODUCTION PROCEDURE

1. Turn the ignition switch OFF to ON.
2. Perform self-diagnosis for “ABS” with CONSULT.

Is DTC “C1109” detected?

YES >> Proceed to diagnosis procedure. Refer to BRC-35, "Diagnosis Procedure".
NO >> INSPECTION END

Diagnosis Procedure

INFOID:0000000009361487

1. CHECK ABS ACTUATOR AND ELECTRIC UNIT (CONTROL UNIT) POWER SUPPLY

1. Turn the ignition switch OFF.
2. Disconnect ABS actuator and electric unit (control unit) harness connector.
3. Check the voltage between ABS actuator and electric unit (control unit) harness connector and ground.

ABS actuator and electric unit (control unit)		—	Voltage
Connector	Terminal		
E41	28	Ground	Approx. 0 V

4. Turn the ignition switch ON.
   CAUTION:
   Never start the engine.
5. Check the voltage between ABS actuator and electric unit (control unit) harness connector and ground.

ABS actuator and electric unit (control unit)		—	Voltage
Connector	Terminal		
E41	28	Ground	Battery voltage

Is the inspection result normal?

YES >> GO TO 3.
NO >> GO TO 2.

2. CHECK ABS ACTUATOR AND ELECTRIC UNIT (CONTROL UNIT) POWER SUPPLY CIRCUIT

1. Turn the ignition switch OFF.
2. Check the 10A fuse (#45).

3. Disconnect IPDM E/R harness connector.
4. Check the continuity between ABS actuator and electric unit (control unit) harness connector and IPDM E/R harness connector.

ABS actuator and electric unit (control unit)		IPDM E/R		Continuity
Connector	Terminal	Connector	Terminal	
E41	28	E5	25	Existed

Is the inspection result normal?

YES >> Perform the trouble diagnosis for ignition power supply circuit. Refer to PG-31, "Wiring Diagram - IGNITION POWER SUPPLY -".
NO >> Repair or replace error-detected parts.

3. CHECK ABS ACTUATOR AND ELECTRIC UNIT (CONTROL UNIT) GROUND

Check the continuity between ABS actuator and electric unit (control unit) harness connector and ground.

ABS actuator and electric unit (control unit)		—	Continuity
Connector	Terminal		
E41	1	Ground	Existed
	4		

Is the inspection result normal?

YES >> GO TO 4.
NO >> Repair or replace error-detected parts.

4. CHECK TERMINAL

1. Check the ABS actuator and electric unit (control unit) pin terminals for damage or loose connection with harness connector.
2. Check the IPDM E/R pin terminals for damage or loose connection with harness connector.

Is the inspection result normal?

YES >> Replace ABS actuator electric unit (control unit). Refer to BRC-112, "Exploded View".
NO >> Repair or replace error-detected parts.

Special Repair Requirement

INFOID:0000000009361488

1. ADJUSTMENT OF STEERING ANGLE SENSOR NEUTRAL POSITION

Always perform the neutral position adjustment for the steering angle sensor, when replacing the ABS actuator and electric unit (control unit) or steering angle sensor and removing steering angle sensor. Refer to BRC-8, "ADJUSTMENT OF STEERING ANGLE SENSOR NEUTRAL POSITION : Special Repair Requirement"

>> END

C1110, C1153, C1170 ABS ACTUATOR AND ELECTRIC UNIT (CONTROL UNIT)

DTC Logic

INFOID:0000000009361489

DTC DETECTION LOGIC

DTC	Display item	Malfunction detected condition	Possible cause
C1110	CONTROLLER FAILURE	When there is an internal malfunction in the ABS actuator and electric unit (control unit).	ABS actuator and electric unit (control unit)
C1153	EMERGENCY BRAKE	When ABS actuator and electric unit (control unit) is malfunctioning. (Pressure increase is too much or too little)	
C1170	VARIANT CODING	In a case where VARIANT CODING is different.	

DTC CONFIRMATION PROCEDURE

1. PRECONDITIONING

If “DTC CONFIRMATION PROCEDURE” has been previously conducted, always turn the ignition switch OFF and wait at least 10 seconds before conducting the next test.

>> GO TO 2.

2. DTC REPRODUCTION PROCEDURE

1. Turn the ignition switch OFF to ON.
2. Perform self-diagnosis for “ABS” with CONSULT.

Is DTC “C1110”, “C1153” or “C1170” detected?

YES >> Proceed to diagnosis procedure. Refer to BRC-37, "Diagnosis Procedure".
NO >> INSPECTION END

Diagnosis Procedure

INFOID:0000000009361490

1. REPLACE ABS ACTUATOR AND ELECTRIC UNIT (CONTROL UNIT)

CAUTION:
Replace ABS actuator and electric unit (control unit) when self-diagnostic result shows items other than those applicable.

>> Replace ABS actuator and electric unit (control unit). Refer to BRC-112, "Exploded View".

Special Repair Requirement

INFOID:0000000009361491

1. ADJUSTMENT OF STEERING ANGLE SENSOR NEUTRAL POSITION

Always perform the neutral position adjustment for the steering angle sensor, when replacing the ABS actuator and electric unit (control unit) or steering angle sensor and removing steering angle sensor. Refer to BRC-8, "ADJUSTMENT OF STEERING ANGLE SENSOR NEUTRAL POSITION : Special Repair Requirement"

>> END

C1111 ABS MOTOR, MOTOR RELAY SYSTEM

Description

INFOID:0000000009361492

PUMP

The pump returns the brake fluid stored in the reservoir to the master cylinder by reducing the pressure.

MOTOR

The motor drives the pump according to the signals transmitted by the ABS actuator and electric unit (control unit).

MOTOR RELAY

Activates or deactivates motor according to the signals transmitted by the ABS actuator and electric unit (control unit).

DTC Logic

INFOID:0000000009361493

DTC DETECTION LOGIC

DTC	Display item	Malfunction detected condition	Possible cause
C1111	PUMP MOTOR	During the actuator motor operating with ON, when the actuator motor turns OFF, or when the control line for actuator motor relay is open.	• Harness or connector • ABS actuator and electric unit (control unit)
		During the actuator motor operating with OFF, when the actuator motor turns ON, or when the control line for relay is shorted to ground.	

DTC CONFIRMATION PROCEDURE

1. PRECONDITIONING

If “DTC CONFIRMATION PROCEDURE” has been previously conducted, always turn the ignition switch OFF and wait at least 10 seconds before conducting the next test.

>> GO TO 2.

2. DTC REPRODUCTION PROCEDURE

1. Turn the ignition switch OFF to ON.
2. Perform self-diagnosis for “ABS” with CONSULT.

Is DTC “C1111” detected?

YES >> Proceed to diagnosis procedure. Refer to BRC-38, "Diagnosis Procedure".
NO >> INSPECTION END

Diagnosis Procedure

INFOID:0000000009361494

1. CHECK ABS MOTOR AND MOTOR RELAY POWER SUPPLY

1. Turn the ignition switch OFF.
2. Disconnect ABS actuator and electric unit (control unit) harness connector.
3. Check the 50A fusible link (#H).
4. Check the voltage between the ABS actuator and electric unit (control unit) harness connector and ground.

ABS actuator and electric unit (control unit)		—	Voltage
Connector	Terminal		
E41	2	Ground	Battery voltage

Is the inspection result normal?

YES >> GO TO 2.
NO >> Perform the trouble diagnosis for battery power supply circuit. Refer to PG-6, "Wiring Diagram - BATTERY POWER SUPPLY -".

2. CHECK ABS ACTUATOR AND ELECTRIC UNIT (CONTROL UNIT) GROUND

Check the continuity between ABS actuator and electric unit (control unit) harness connector and ground.

ABS actuator and electric unit (control unit)		—	Continuity
Connector	Terminal		
E41	1	Ground	Existed
	4		

Is the inspection result normal?

YES >> GO TO 3.
NO >> Repair or replace error-detected parts.

3. CHECK TERMINAL

Check the ABS actuator and electric unit (control unit) pin terminals for damage or loose connection with harness connector.

Is the inspection result normal?

YES >> Replace ABS actuator and electric unit (control unit). Refer to BRC-112, "Exploded View".
NO >> Repair or replace error-detected parts.

Special Repair Requirement

INFOID:0000000009361495

1. ADJUSTMENT OF STEERING ANGLE SENSOR NEUTRAL POSITION

Always perform the neutral position adjustment for the steering angle sensor, when replacing the ABS actuator and electric unit (control unit) or steering angle sensor and removing steering angle sensor. Refer to BRC-8, "ADJUSTMENT OF STEERING ANGLE SENSOR NEUTRAL POSITION : Special Repair Requirement"

>> END

C1115 WHEEL SENSOR

Description

INFOID:0000000009361496

When the sensor rotor rotates, the magnetic field changes. It converts the magnetic field changes to current signals (rectangular wave) and transmits them to the ABS actuator and electric unit (control unit).

DTC Logic

INFOID:0000000009361497

DTC DETECTION LOGIC

DTC	Display item	Malfunction detected condition	Possible cause
C1115	ABS SENSOR [ABNORMAL SIGNAL]	When wheel sensor input signal is malfunctioning.	• Harness or connector • Wheel sensor • ABS actuator and electric unit (control unit)

DTC CONFIRMATION PROCEDURE

1. PRECONDITIONING

If “DTC CONFIRMATION PROCEDURE” has been previously conducted, always turn the ignition switch OFF and wait at least 10 seconds before conducting the next test.

>> GO TO 2.

2. DTC REPRODUCTION PROCEDURE

1. Start the engine and drive the vehicle at 30 km/h (19 MPH) or more for approximately 1 minute.
2. Perform self-diagnosis for “ABS” with CONSULT.

Is DTC “C1115” detected?

YES >> Proceed to diagnosis procedure. Refer to BRC-40, "Diagnosis Procedure".
NO >> INSPECTION END

Diagnosis Procedure

INFOID:0000000009361498

CAUTION:
Never check between wheel sensor harness connector terminals.

1. CHECK ABS ACTUATOR AND ELECTRIC UNIT (CONTROL UNIT) POWER SUPPLY SYSTEM

Check the ABS actuator and electric unit (control unit) power supply system. Refer to BRC-74, "Diagnosis Procedure".

Is the inspection result normal?

YES >> GO TO 2.
NO >> Repair or replace error-detected parts.

2. CHECK TIRE

1. Turn the ignition switch OFF.
2. Check the tire air pressure, wear and size. Refer to WT-54, "Tire Air Pressure".

Is the inspection result normal?

YES >> GO TO 5.
NO >> Adjust air pressure or replace tire and GO TO 3.

3. CHECK DATA MONITOR (1)

1. Erase self-diagnosis result for “ABS” with CONSULT.
2. Turn the ignition switch OFF, and wait 10 seconds or more.
3. Start the engine.
4. Select “ABS” and “DATA MONITOR”, check the “FR LH SENSOR”, “FR RH SENSOR”, “RR LH SENSOR” and “RR RH SENSOR” with CONSULT.
   NOTE:
   Set the “DATA MONITOR” recording speed to “10 msec”.

5. Read a value (wheel speed) of both normal wheel sensors and error-detecting wheel sensor.

Regarding the deference at 30 km/h (19 MPH) between the wheel speed detected by the error detecting wheel sensor and the maximum/minimum wheel speed detected by the normal wheel sensors, is the difference within 5%, respectively?

YES >> GO TO 4.
NO >> GO TO 5.

4. PERFORM SELF-DIAGNOSIS (1)

1. Drive the vehicle at approx. 30 km/h (19 MPH) or more for approx. 1 minute.
2. Stop the vehicle.
3. Perform self-diagnosis for “ABS” with CONSULT.

Is DTC “C1115” detected?

YES >> GO TO 5.
NO >> INSPECTION END

5. CHECK WHEEL SENSOR

1. Turn the ignition switch OFF.
2. Check the wheel sensor for damage.
3. Remove dust and foreign matter adhered to the sensor rotor with a vacuum dust collector through the wheel sensor mounting hole.

   CAUTION:
   Install wheel sensor with no backlash and float, and tighten the mounting bolt to the specified torque.
   - **Front: Refer to BRC-109, "FRONT WHEEL SENSOR : Exploded View".**
   - **Rear: Refer to BRC-110, "REAR WHEEL SENSOR : Exploded View".**

Is the inspection result normal?

YES >> GO TO 8.
NO >> GO TO 6.

6. REPLACE WHEEL SENSOR (1)

1. Replace wheel sensor.
- Front: Refer to BRC-109, "FRONT WHEEL SENSOR : Exploded View".
- Rear: Refer to BRC-110, "REAR WHEEL SENSOR : Exploded View".
2. Erase self-diagnosis result for “ABS” with CONSULT.
3. Turn the ignition switch OFF, and wait 10 seconds or more.
4. Start the engine.
5. Select “ABS” and “DATA MONITOR”, check the “FR LH SENSOR”, “FR RH SENSOR”, “RR LH SENSOR” and “RR RH SENSOR” with CONSULT.

   NOTE:
   Set the “DATA MONITOR” recording speed to “10 msec”.
6. Read a value (wheel speed) of both normal wheel sensors and error-detecting wheel sensor.

Regarding the deference at 30 km/h (19 MPH) between the wheel speed detected by the error detecting wheel sensor and the maximum/minimum wheel speed detected by the normal wheel sensors, is the difference within 5%, respectively?

YES >> GO TO 7.
NO >> GO TO 19.

7. PERFORM SELF-DIAGNOSIS (2)

1. Drive the vehicle at approx. 30 km/h (19 MPH) or more for approx. 1 minute.
2. Stop the vehicle.
3. Perform self-diagnosis for “ABS” with CONSULT.

Is DTC “C1115” detected?

YES >> GO TO 19.
NO >> INSPECTION END

8. CHECK CONNECTOR

1. Turn the ignition switch OFF.
2. Check the ABS actuator and electric unit (control unit) harness connector for disconnection or looseness.
3. Check the wheel sensor harness connector for disconnection or looseness.

Is the inspection result normal?

YES >> GO TO 11.
NO >> Repair or replace error-detected parts, securely lock the harness connector, and GO TO 9.

9. CHECK DATA MONITOR (2)

1. Erase self-diagnosis result for “ABS” with CONSULT.
2. Turn the ignition switch OFF, and wait 10 seconds or more.
3. Start the engine.
4. Select “ABS” and “DATA MONITOR”, check the “FR LH SENSOR”, “FR RH SENSOR”, “RR LH SENSOR” and “RR RH SENSOR” with CONSULT.
   NOTE:
   Set the “DATA MONITOR” recording speed to “10 msec”.
5. Read a value (wheel speed) of both normal wheel sensors and error-detecting wheel sensor.

Regarding the deference at 30 km/h (19 MPH) between the wheel speed detected by the error detecting wheel sensor and the maximum/minimum wheel speed detected by the normal wheel sensors, is the difference within 5%, respectively?

YES >> GO TO 10.
NO >> GO TO 11.

10. PERFORM SELF-DIAGNOSIS (3)

1. Drive the vehicle at approx. 30 km/h (19 MPH) or more for approx. 1 minute.
2. Stop the vehicle.
3. Perform self-diagnosis for “ABS” with CONSULT.

Is DTC “C1115” detected?

YES >> GO TO 11.
NO >> INSPECTION END

11. CHECK TERMINAL

1. Turn the ignition switch OFF.
2. Disconnect ABS actuator and electric unit (control unit) harness connector and then check the ABS actuator and electric unit (control unit) pin terminals for damage or loose connection with harness connector.
3. Disconnect wheel sensor harness connector and check the each wheel sensor pin terminals for damage or loose connection with harness connector.

Is the inspection result normal?

YES >> GO TO 14.
NO >> Repair or replace error-detected parts and GO TO 12.

12. CHECK DATA MONITOR (3)

1. Connect ABS actuator and electric unit (control unit) harness connector.
2. Connect wheel sensor harness connector.
3. Erase self-diagnosis result for “ABS” with CONSULT.
4. Turn the ignition switch OFF, and wait 10 seconds or more.
5. Start the engine.
6. Select “ABS” and “DATA MONITOR”, check the “FR LH SENSOR”, “FR RH SENSOR”, “RR LH SENSOR” and “RR RH SENSOR” with CONSULT.
   NOTE:
   Set the “DATA MONITOR” recording speed to “10 msec”.
7. Read a value (wheel speed) of both normal wheel sensors and error-detecting wheel sensor.

Regarding the deference at 30 km/h (19 MPH) between the wheel speed detected by the error detecting wheel sensor and the maximum/minimum wheel speed detected by the normal wheel sensors, is the difference within 5%, respectively?

YES >> GO TO 13.
NO >> GO TO 14.

13. PERFORM SELF-DIAGNOSIS (4)

1. Drive the vehicle at approx. 30 km/h (19 MPH) or more for approx. 1 minute.
2. Stop the vehicle.
3. Perform self-diagnosis for “ABS” with CONSULT.

Is DTC “C1115” detected?

YES >> GO TO 14.
NO >> INSPECTION END

14. CHECK WHEEL SENSOR HARNESS

1. Turn the ignition switch OFF.
2. Disconnect ABS actuator and electric unit (control unit) harness connector.
3. Disconnect wheel sensor harness connector.
4. Check the continuity between ABS actuator and electric unit (control unit) harness connector and wheel sensor harness connector. (Check the continuity when steering wheel is steered to RH and LH, or center harness in wheel housing is moved.)

Measurement connector and terminal for power supply circuit

ABS actuator and electric unit (control unit)		Wheel sensor		Continuity
Connector	Terminal	Connector	Terminal	
E41	26	E60 (Front LH wheel)	1	Existed
	9	E27 (Front RH wheel)		
	6	B34 (Rear LH wheel)		
	7	B33 (Rear RH wheel)		

Measurement connector and terminal for signal circuit

ABS actuator and electric unit (control unit)		Wheel sensor		Continuity
Connector	Terminal	Connector	Terminal	
E41	5	E60 (Front LH wheel)	2	Existed
	10	E27 (Front RH wheel)		
	27	B34 (Rear LH wheel)		
	29	B33 (Rear RH wheel)		

5. Check the continuity between ABS actuator and electric unit (control unit) harness connector and the ground.

ABS actuator and electric unit (control unit)		—	Continuity
Connector	Terminal		
E41	26, 5	Ground	Not existed
	9, 10		
	6, 27		
	7, 29		

Is the inspection result normal?

YES >> GO TO 15.
NO >> Repair or replace error-detected parts and GO TO 15.

15. CHECK DATA MONITOR (4)

1. Connect ABS actuator and electric unit (control unit) harness connector.
2. Connect wheel sensor harness connector.
3. Erase self-diagnosis result for “ABS” with CONSULT.
4. Turn the ignition switch OFF, and wait 10 seconds or more.
5. Start the engine.
6. Select “ABS” and “DATA MONITOR”, check the “FR LH SENSOR”, “FR RH SENSOR”, “RR LH SENSOR” and “RR RH SENSOR” with CONSULT.
   NOTE:
   Set the “DATA MONITOR” recording speed to “10 msec”.
7. Read a value (wheel speed) of both normal wheel sensors and error-detecting wheel sensor.

Regarding the deference at 30 km/h (19 MPH) between the wheel speed detected by the error detecting wheel sensor and the maximum/minimum wheel speed detected by the normal wheel sensors, is the difference within 5%, respectively?

YES >> GO TO 16.

NO >> GO TO 17.

16. PERFORM SELF-DIAGNOSIS (5)

1. Drive the vehicle at approx. 30 km/h (19 MPH) or more for approx. 1 minute.
2. Stop the vehicle.
3. Perform self-diagnosis for “ABS” with CONSULT.

Is DTC “C1115” detected?

YES >> GO TO 17.
NO >> INSPECTION END

17. REPLACE WHEEL SENSOR

1. Replace wheel sensor.
2. Front: Refer to BRC-109, "FRONT WHEEL SENSOR : Exploded View".
3. Rear: Refer to BRC-110, "REAR WHEEL SENSOR : Exploded View".
4. Erase self-diagnosis result for “ABS” with CONSULT.
5. Turn the ignition switch OFF, and wait 10 seconds or more.
6. Start the engine.
7. Select “ABS” and “DATA MONITOR”, check the “FR LH SENSOR”, “FR RH SENSOR”, “RR LH SENSOR” and “RR RH SENSOR” with CONSULT.
   NOTE:
   Set the “DATA MONITOR” recording speed to “10 msec”.
8. Read a value (wheel speed) of both normal wheel sensors and error-detecting wheel sensor.

Regarding the deference at 30 km/h (19 MPH) between the wheel speed detected by the error detecting wheel sensor and the maximum/minimum wheel speed detected by the normal wheel sensors, is the difference within 5%, respectively?

YES >> GO TO 18.
NO >> GO TO 19.

18. PERFORM SELF-DIAGNOSIS (6)

1. Drive the vehicle at approx. 30 km/h (19 MPH) or more for approx. 1 minute.
2. Stop the vehicle.
3. Perform self-diagnosis for “ABS” with CONSULT.

Is DTC “C1115” detected?

YES >> GO TO 19.
NO >> INSPECTION END

19. REPLACE SENSOR ROTOR

1. Replace sensor rotor.
- Front: Refer to BRC-111, "FRONT SENSOR ROTOR : Exploded View".
- Rear: Refer to BRC-111, "REAR SENSOR ROTOR : Exploded View".
2. Erase self-diagnosis result for “ABS”.
3. Turn the ignition switch OFF, and wait 10 seconds or more.
4. Start the engine.
5. Drive the vehicle at approx. 30 km/h (19 MPH) or more for approx. 1 minute.
6. Stop the vehicle.
7. Perform self-diagnosis for “ABS” with CONSULT.

Is DTC “C1115” detected?

YES >> Replace ABS actuator and electric unit (control unit). Refer to BRC-112, "Exploded View".
NO >> INSPECTION END

Special Repair Requirement

INFOID:0000000009361499

1. ADJUSTMENT OF STEERING ANGLE SENSOR NEUTRAL POSITION

Always perform the neutral position adjustment for the steering angle sensor, when replacing the ABS actuator and electric unit (control unit) or steering angle sensor and removing steering angle sensor. Refer to BRC-8, "ADJUSTMENT OF STEERING ANGLE SENSOR NEUTRAL POSITION : Special Repair Requirement"

>> END

C1116 STOP LAMP SWITCH

Description

INFOID:0000000009361500

The stop lamp switch transmits the stop lamp switch signal (ON/OFF) to the ABS actuator and electric unit (control unit).

DTC Logic

INFOID:0000000009361501

DTC DETECTION LOGIC

DTC	Display item	Malfunction detected condition	Possible cause
C1116	STOP LAMP SW	When a stop lamp switch signal is not input where the brake pedal is depressed.	• Harness or connector • Stop lamp switch • ABS actuator and electric unit (control unit)

DTC CONFIRMATION PROCEDURE

1. PRECONDITIONING

If “DTC CONFIRMATION PROCEDURE” has been previously conducted, always turn the ignition switch OFF and wait at least 10 seconds before conducting the next test.

>> GO TO 2.

2. DTC REPRODUCTION PROCEDURE

1. Turn the ignition switch OFF to ON.
2. Perform self-diagnosis for “ABS” with CONSULT.

Is DTC “C1116” detected?

YES >> Proceed to diagnosis procedure. Refer to BRC-45, "Diagnosis Procedure".
NO >> INSPECTION END

Diagnosis Procedure

INFOID:0000000009361502

NOTE:
DTC “C1116” may be detected when the brake pedal and the accelerator pedal are simultaneously depressed for 1 minute or more while driving the vehicle. This is not a malfunction.

1. INTERVIEW FROM THE CUSTOMER

Check the if the brake pedal and the accelerator pedal are simultaneously depressed for 1 minute or more while driving the vehicle.

Is there such a history?

YES >> GO TO 2.
NO >> GO TO 3.

2. PERFORM SELF-DIAGNOSIS

1. Erase self-diagnosis result for “ABS” with CONSULT.
2. Turn the ignition switch OFF, and wait 10 seconds or more.
3. Start the engine.
   CAUTION:
   Never start the vehicle.
4. Depress the brake pedal several times.
5. Perform self-diagnosis for “ABS” with CONSULT.

Is DTC “C1116” detected?

YES >> GO TO 3.
NO >> INSPECTION END

3. STOP LAMP FOR ILLUMINATION

Depress brake pedal and check that stop lamp turns ON.

Does stop lamp turn ON?

YES >> GO TO 5.
NO >> Check the stop lamp system. Refer to EXL-93, "Diagnosis Procedure". GO TO 4.

4. CHECK DATA MONITOR (1)

1. Erase self-diagnosis result for “ABS” with CONSULT.
2. Turn the ignition switch OFF, and wait 10 seconds or more.
3. Start the engine.
   CAUTION:
   Never start the vehicle.
4. Select “ABS”, “DATA MONITOR” and “STOP LAMP SW” according to this order with CONSULT. Check that data monitor displays “On” or “Off” when brake pedal is depress or release. Refer to BRC-85, "Reference Value".
5. Select “ABS”, “DATA MONITOR” and “pressure sensor” according to this order. Check that data monitor displays “5 bar” or less when brake pedal is depress. Refer to BRC-85, "Reference Value".

Is the inspection result normal?

YES >> INSPECTION END
NO >> GO TO 5.

5. CHECK STOP LAMP SWITCH CLEARANCE

1. Turn the ignition switch OFF.
2. Check the stop lamp switch clearance. Refer to BR-8, "Inspection and Adjustment".

Is the inspection result normal?

YES >> GO TO 7.
NO >> Adjust stop lamp switch clearance. Refer to BR-8, "Inspection and Adjustment". GO TO 6.

6. CHECK DATA MONITOR (2)

1. Erase self-diagnosis result for “ABS” with CONSULT.
2. Turn the ignition switch OFF, and wait 10 seconds or more.
3. Start the engine.
   CAUTION:
   Never start the vehicle.
4. Select “ABS”, “DATA MONITOR” and “STOP LAMP SW” according to this order with CONSULT. Check that data monitor displays “On” or “Off” when brake pedal is depress or release. Refer to BRC-85, "Reference Value".
5. Select “ABS”, “DATA MONITOR” and “pressure sensor” according to this order. Check that data monitor displays “5 bar” or less when brake pedal is depress. Refer to BRC-85, "Reference Value".

Is the inspection result normal?

YES >> INSPECTION END
NO >> GO TO 7.

7. CHECK STOP LAMP SWITCH

Check the stop lamp switch. Refer to BRC-48, "Component Inspection".

Is the inspection result normal?

YES >> GO TO 9.
NO >> Replace stop lamp switch. Refer to BR-19, "Exploded View". GO TO 8.

8. CHECK DATA MONITOR (3)

1. Erase self-diagnosis result for “ABS” with CONSULT.
2. Turn the ignition switch OFF, and wait 10 seconds or more.
3. Start the engine.
   CAUTION:
   Never start the vehicle.
4. Select “ABS”, “DATA MONITOR” and “STOP LAMP SW” according to this order with CONSULT. Check that data monitor displays “On” or “Off” when brake pedal is depress or release. Refer to BRC-85, "Reference Value".
5. Select “ABS”, “DATA MONITOR” and “pressure sensor” according to this order. Check that data monitor displays “5 bar” or less when brake pedal is depress. Refer to BRC-85, "Reference Value".

Is the inspection result normal?

YES >> INSPECTION END
NO >> GO TO 9.

9. CHECK CONNECTOR AND TERMINAL

1. Turn the ignition switch OFF.
2. Disconnect ABS actuator and electric unit (control unit) harness connector.
3. Check the ABS actuator and electric unit (control unit) harness connector for disconnection or looseness.
4. Check the ABS actuator and electric unit (control unit) pin terminals for damage or loose connection with harness connector.
5. Disconnect stop lamp switch harness connector.
6. Check the stop lamp switch harness connector for disconnection or looseness.
7. Check the stop lamp switch pin terminals for damage or loose connection with harness connector.

Is the inspection result normal?

YES >> GO TO 11.
NO >> Repair or replace error-detected parts. GO TO 10.

10. CHECK DATA MONITOR (4)

1. Connect ABS actuator and electric unit (control unit) harness connector.
2. Connect stop lamp switch harness connector.
3. Erase self-diagnosis result for “ABS” with CONSULT.
4. Turn the ignition switch OFF, and wait 10 seconds or more.
5. Start the engine.
   CAUTION:
   Never start the vehicle.
6. Select “ABS”, “DATA MONITOR” and “STOP LAMP SW” according to this order with CONSULT. Check that data monitor displays “On” or “Off” when brake pedal is depress or release. Refer to BRC-85, "Reference Value".
7. Select “ABS”, “DATA MONITOR” and “pressure sensor” according to this order. Check that data monitor displays “5 bar” or less when brake pedal is depress. Refer to BRC-85, "Reference Value".

Is the inspection result normal?

YES >> INSPECTION END
NO >> GO TO 11.

11. CHECK STOP LAMP SWITCH CIRCUIT (1)

1. Turn the ignition switch OFF.
2. Disconnect ABS actuator and electric unit (control unit) harness connector.
3. Check the voltage between ABS actuator and electric unit (control unit) harness connector and ground.

ABS actuator and electric unit (control unit)		—	Condition	Voltage
Connector	Terminal			
E41	30	Ground	Brake pedal depressed	Battery voltage
			Brake pedal not depressed	Approx. 0 V

4. Turn the ignition switch ON.
5. Check the voltage between ABS actuator and electric unit (control unit) harness connector and ground.

ABS actuator and electric unit (control unit)		—	Condition	Voltage
Connector	Terminal			
E41	30	Ground	Brake pedal depressed	Battery voltage
			Brake pedal not depressed	Approx. 0 V

Is the inspection result normal?

YES >> Replace ABS actuator and electric unit (control unit). Refer to BRC-112, "Exploded View".
NO >> Repair or replace error-detected parts. GO TO 12.

12. CHECK STOP LAMP SWITCH CIRCUIT (2)

1. Turn the ignition switch OFF.
2. Disconnect stop lamp switch harness connector.

3. Check the continuity between ABS actuator and electric unit (control unit) harness connector and stop lamp switch harness connector.

ABS actuator and electric unit (control unit)		Stop lamp switch		Continuity
Connector	Terminal	Connector	Terminal	
E41	30	E110	2	Existed

4. Check the continuity between ABS actuator and electric unit (control unit) harness connector and the ground.

ABS actuator and electric unit (control unit)		—	Continuity
Connector	Terminal		
E41	30	Ground	Not existed

Is the inspection result normal?

YES >> Replace ABS actuator and electric unit (control unit). Refer to BRC-112, "Exploded View".
NO >> Repair or replace error-detected parts. GO TO 13.

13. CHECK DATA MONITOR (5)

1. Connect ABS actuator and electric unit (control unit) harness connector.
2. Connect stop lamp switch harness connector.
3. Erase self-diagnosis result for “ABS” with CONSULT.
4. Turn the ignition switch OFF, and wait 10 seconds or more.
5. Start the engine.
   CAUTION:
   Never start the vehicle.
6. Select “ABS”, “DATA MONITOR” and “STOP LAMP SW” according to this order with CONSULT. Check that data monitor displays “On” or “Off” when brake pedal is depress or release. Refer to BRC-85, "Reference Value".
7. Select “ABS”, “DATA MONITOR” and “pressure sensor” according to this order. Check that data monitor displays “5 bar” or less when brake pedal is depress. Refer to BRC-85, "Reference Value".

Is the inspection result normal?

YES >> INSPECTION END
NO >> Replace ABS actuator and electric unit (control unit). Refer to BRC-112, "Exploded View".

Component Inspection

INFOID:0000000009361503

1. CHECK STOP LAMP SWITCH

1. Turn the ignition switch OFF.
2. Disconnect stop lamp switch harness connector.
3. Check continuity between stop lamp switch harness connector terminals.

Stop lamp switch	Condition	Continuity
Terminal		
1 – 2	Release stop lamp switch (When brake pedal is depressed.)	Existed
	Push stop lamp switch (When brake pedal is released.)	Not existed

Is the inspection result normal?

YES >> INSPECTION END
NO >> Replace stop lamp switch. Refer to BR-19, "Exploded View".

Special Repair Requirement

INFOID:0000000009361504

1. ADJUSTMENT OF STEERING ANGLE SENSOR NEUTRAL POSITION

Always perform the neutral position adjustment for the steering angle sensor, when replacing the ABS actuator and electric unit (control unit) or steering angle sensor and removing steering angle sensor. Refer to BRC-8, "ADJUSTMENT OF STEERING ANGLE SENSOR NEUTRAL POSITION : Special Repair Requirement"

>> END

C1120, C1122, C1124, C1126 IN ABS SOL

Description

INFOID:0000000009361505

The solenoid valve increases, holds or decreases the fluid pressure of each brake caliper according to the signals transmitted by the ABS actuator and electric unit (control unit).

DTC Logic

INFOID:0000000009361506

DTC DETECTION LOGIC

DTC	Display item	Malfunction detected condition	Possible cause
C1120	FR LH IN ABS SOL	When the control unit detects a malfunction in the front LH inlet solenoid circuit.	ABS actuator and electric unit (control unit)
C1122	FR RH IN ABS SOL	When the control unit detects a malfunction in the front RH inlet solenoid circuit.	
C1124	RR LH IN ABS SOL	When the control unit detects a malfunction in the rear LH inlet solenoid circuit.	
C1126	RR RH IN ABS SOL	When the control unit detects a malfunction in the rear RH inlet solenoid circuit.	

DTC CONFIRMATION PROCEDURE

1. PRECONDITIONING

If “DTC CONFIRMATION PROCEDURE” has been previously conducted, always turn the ignition switch OFF and wait at least 10 seconds before conducting the next test.

>> GO TO 2.

2. DTC REPRODUCTION PROCEDURE

1. Turn the ignition switch OFF to ON.
2. Perform self-diagnosis for “ABS” with CONSULT.

Is DTC “C1120”, “C1122”, “C1124” or “C1126” detected?

YES >> Proceed to diagnosis procedure. Refer to BRC-50, "Diagnosis Procedure".
NO >> INSPECTION END

Diagnosis Procedure

INFOID:0000000009361507

1. CHECK SOLENOID VALVE POWER SUPPLY

1. Turn the ignition switch OFF.
2. Disconnect ABS actuator and electric unit (control unit) harness connector.
3. Check the 30A fusible link (#L).
4. Check the voltage between ABS actuator and electric unit (control unit) harness connector and ground.

ABS actuator and electric unit (control unit)		—	Voltage
Connector	Terminal		
E41	3	Ground	Battery voltage

Is the inspection result normal?

YES >> GO TO 2.
NO >> Perform the trouble diagnosis for battery power supply circuit. Refer to PG-6, "Wiring Diagram - BATTERY POWER SUPPLY -".

2. CHECK SOLENOID VALVE GROUND

Check the continuity between ABS actuator and electric unit (control unit) harness connector and ground.

ABS actuator and electric unit (control unit)		—	Continuity
Connector	Terminal		
E41	1	Ground	Existed
	4		

Is the inspection result normal?

YES >> GO TO 3.
NO >> Repair or replace error-detected parts.

3. CHECK TERMINAL

Check the ABS actuator and electric unit (control unit) pin terminals for damage or loose connection with harness connector.

Is the inspection result normal?

YES >> Replace ABS actuator and electric unit (control unit). Refer to BRC-112, "Exploded View".
NO >> Repair or replace error-detected parts.

Special Repair Requirement

INFOID:0000000009361508

1. ADJUSTMENT OF STEERING ANGLE SENSOR NEUTRAL POSITION

Always perform the neutral position adjustment for the steering angle sensor, when replacing the ABS actuator and electric unit (control unit) or steering angle sensor and removing steering angle sensor. Refer to BRC-8, "ADJUSTMENT OF STEERING ANGLE SENSOR NEUTRAL POSITION : Special Repair Requirement"

>> END

C1121, C1123, C1125, C1127 OUT ABS SOL

Description

INFOID:0000000009361509

The solenoid valve increases, holds or decreases the fluid pressure of each brake caliper according to the signals transmitted by the ABS actuator and electric unit (control unit).

DTC Logic

INFOID:0000000009361510

DTC DETECTION LOGIC

DTC	Display item	Malfunction detected condition	Possible cause
C1121	FR LH OUT ABS SOL	When the control unit detects a malfunction in the front LH outlet solenoid circuit.	• ABS actuator and electric unit (control unit)
C1123	FR RH OUT ABS SOL	When the control unit detects a malfunction in the front RH outlet solenoid circuit.	
C1125	RR LH OUT ABS SOL	When the control unit detects a malfunction in the rear LH outlet solenoid circuit.	
C1127	RR RH OUT ABS SOL	When the control unit detects a malfunction in the rear RH outlet solenoid circuit.	

DTC CONFIRMATION PROCEDURE

1. PRECONDITIONING

If “DTC CONFIRMATION PROCEDURE” has been previously conducted, always turn the ignition switch OFF and wait at least 10 seconds before conducting the next test.

>> GO TO 2.

2. DTC REPRODUCTION PROCEDURE

1. Turn the ignition switch OFF to ON.
2. Perform self-diagnosis for “ABS” with CONSULT.

Is DTC “C1121”, “C1123”, “C1125” or “C1127” detected?

YES >> Proceed to diagnosis procedure. Refer to BRC-52, "Diagnosis Procedure".
NO >> INSPECTION END

Diagnosis Procedure

INFOID:0000000009361511

1. CHECK SOLENOID VALVE POWER SUPPLY

1. Turn the ignition switch OFF.
2. Disconnect ABS actuator and electric unit (control unit) harness connector.
3. Check the 30A fusible link (#L).
4. Check the voltage between ABS actuator and electric unit (control unit) harness connector and ground.

ABS actuator and electric unit (control unit)		—	Voltage
Connector	Terminal		
E41	3	Ground	Battery voltage

Is the inspection result normal?

YES >> GO TO 2.
NO >> Perform the trouble diagnosis for battery power supply circuit. Refer to PG-6, "Wiring Diagram - BATTERY POWER SUPPLY -".

2. CHECK SOLENOID VALVE GROUND

Check the continuity between ABS actuator and electric unit (control unit) harness connector and ground.

ABS actuator and electric unit (control unit)		—	Continuity
Connector	Terminal		
E41	1	Ground	Existed
	4		

Is the inspection result normal?

YES >> GO TO 3.
NO >> Repair or replace error-detected parts.

3. CHECK TERMINAL

Check the ABS actuator and electric unit (control unit) pin terminals for damage or loose connection with harness connector.

Is the inspection result normal?

YES >> Replace ABS actuator and electric unit (control unit). Refer to BRC-112, "Exploded View".
NO >> Repair or replace error-detected parts.

Special Repair Requirement

INFOID:0000000009361512

1. ADJUSTMENT OF STEERING ANGLE SENSOR NEUTRAL POSITION

Always perform the neutral position adjustment for the steering angle sensor, when replacing the ABS actuator and electric unit (control unit) or steering angle sensor and removing steering angle sensor. Refer to BRC-8, "ADJUSTMENT OF STEERING ANGLE SENSOR NEUTRAL POSITION : Special Repair Requirement"

>> END

C1130 ENGINE SIGNAL

Description

INFOID:0000000009361513

ABS actuator and electric unit (control unit) and ECM exchange the engine signal with CAN communication line.

DTC Logic

INFOID:0000000009361514

DTC DETECTION LOGIC

DTC	Display item	Malfunction detected condition	Possible cause
C1130	ENGINE SIGNAL 1	Major engine components are malfunctioning.	• Harness or connector • ABS actuator and electric unit (control unit) • ECM • CAN communication line

DTC CONFIRMATION PROCEDURE

1. PRECONDITIONING

If “DTC CONFIRMATION PROCEDURE” has been previously conducted, always turn the ignition switch OFF and wait at least 10 seconds before conducting the next test.

>> GO TO 2.

2. DTC REPRODUCTION PROCEDURE

1. Turn the ignition switch OFF to ON.
2. Perform self-diagnosis for “ABS” with CONSULT.

Is DTC “C1130” detected?

YES >> Proceed to diagnosis procedure. Refer to BRC-54, "Diagnosis Procedure".
NO >> INSPECTION END

Diagnosis Procedure

INFOID:0000000009361515

1. PERFORM ECM SELF-DIAGNOSIS

Perform self-diagnosis for “ENGINE” with CONSULT.

Is any DTC detected?

YES >> Check the DTC.
NO >> GO TO 2.

2. PERFORM ABS ACTUATOR AND ELECTRIC UNIT (CONTROL UNIT) SELF-DIAGNOSIS

1. Erase self-diagnosis results for “ABS” with CONSULT.
2. Turn the ignition switch OFF.
3. Start the engine. Drive the vehicle for a while.
4. Make sure that malfunction indicator lamp (MIL) turns OFF.
5. Stop the engine. Perform self-diagnosis for “ABS” with CONSULT.

Is DTC “C1130” detected?

YES >> Replace ABS actuator and electric unit (control unit). Refer to BRC-112, "Exploded View".
NO >> Check the ABS actuator and electric unit (control unit) harness connector terminals for damage or loose connection with harness connector. If any items are damaged, repair or replace error-detected parts.

Special Repair Requirement

INFOID:0000000009361516

1. ADJUSTMENT OF STEERING ANGLE SENSOR NEUTRAL POSITION

Always perform the neutral position adjustment for the steering angle sensor, when replacing the ABS actuator and electric unit (control unit) or steering angle sensor and removing steering angle sensor. Refer to BRC-8, "ADJUSTMENT OF STEERING ANGLE SENSOR NEUTRAL POSITION : Special Repair Requirement"

>> END

C1140 ACTUATOR RELAY SYSTEM

Description

INFOID:0000000009361517

Activates or deactivates each solenoid valve according to the signals transmitted by the ABS actuator and electric unit (control unit).

DTC Logic

INFOID:0000000009361518

DTC DETECTION LOGIC

DTC	Display item	Malfunction detected condition	Possible cause
C1140	ACTUATOR RELAY	During the actuator relay operating with OFF, when the actuator relay turns ON, or when the control line for the relay is shorted to the ground.	• Harness or connector • ABS actuator and electric unit (control unit)
		During the actuator relay operating with ON, when the actuator relay turns ON, or when the control line for the relay is open.	

DTC CONFIRMATION PROCEDURE

1. PRECONDITIONING

If “DTC CONFIRMATION PROCEDURE” has been previously conducted, always turn the ignition switch OFF and wait at least 10 seconds before conducting the next test.

>> GO TO 2.

2. DTC REPRODUCTION PROCEDURE

1. Turn the ignition switch OFF to ON.
2. Perform self-diagnosis for “ABS” with CONSULT.

Is DTC “C1140” detected?

YES >> Proceed to diagnosis procedure. Refer to BRC-56, "Diagnosis Procedure".
NO >> INSPECTION END

Diagnosis Procedure

INFOID:0000000009361519

1. CHECK ACTUATOR RELAY POWER SUPPLY

1. Turn the ignition switch OFF.
2. Disconnect ABS actuator and electric unit (control unit) harness connector.
3. Check the 30A fusible link (#L).
4. Check the voltage between ABS actuator and electric unit (control unit) harness connector and ground.

ABS actuator and electric unit (control unit)		—	Voltage
Connector	Terminal		
E41	3	Ground	Battery voltage

Is the inspection result normal?

YES >> GO TO 2.
NO >> Perform the trouble diagnosis for battery power supply circuit. Refer to PG-6, "Wiring Diagram - BATTERY POWER SUPPLY -".

2. CHECK ACTUATOR RELAY GROUND

Check the continuity between ABS actuator and electric unit (control unit) harness connector and ground.

ABS actuator and electric unit (control unit)		—	Continuity
Connector	Terminal		
E41	1	Ground	Existed
	4		

Is the inspection result normal?

YES >> GO TO 3.
NO >> Repair or replace error-detected parts.

3. CHECK TERMINAL

Check the ABS actuator and electric unit (control unit) pin terminals for damage or loose connection with harness connector.

Is the inspection result normal?

YES >> Replace ABS actuator and electric unit (control unit). Refer to BRC-112, "Exploded View".
NO >> Repair or replace error-detected parts.

Special Repair Requirement

INFOID:0000000009361520

1. ADJUSTMENT OF STEERING ANGLE SENSOR NEUTRAL POSITION

Always perform the neutral position adjustment for the steering angle sensor, when replacing the ABS actuator and electric unit (control unit) or steering angle sensor and removing steering angle sensor. Refer to BRC-8, "ADJUSTMENT OF STEERING ANGLE SENSOR NEUTRAL POSITION : Special Repair Requirement"

>> END

C1142 PRESS SENSOR

Description

INFOID:0000000009361521

The pressure sensor converts the brake fluid pressure to an electric signal and transmits it to the ABS actuator and electric unit (control unit). [The pressure sensor is integrated in the ABS actuator and electric unit (control unit).]

DTC Logic

INFOID:0000000009361522

DTC DETECTION LOGIC

DTC	Display item	Malfunction detected condition	Possible cause
C1142	PRESS SEN CIRCUIT	Pressure sensor signal line is open or shorted, or pressure sensor is malfunctioning.	• Harness or connector • Stop lamp switch • ABS actuator and electric unit (control unit)

DTC CONFIRMATION PROCEDURE

1. PRECONDITIONING

If “DTC CONFIRMATION PROCEDURE” has been previously conducted, always turn the ignition switch OFF and wait at least 10 seconds before conducting the next test.

>> GO TO 2.

2. DTC REPRODUCTION PROCEDURE

1. Turn the ignition switch OFF to ON.
2. Perform self-diagnosis for “ABS” with CONSULT.

Is DTC “C1142” detected?

YES >> Proceed to diagnosis procedure. Refer to BRC-58, "Diagnosis Procedure".
NO >> INSPECTION END

Diagnosis Procedure

INFOID:0000000009361523

1. CHECK STOP LAMP SWITCH

Check the stop lamp switch system. Refer to BRC-45, "Diagnosis Procedure".

Is the inspection result normal?

YES >> GO TO 2.
NO >> Repair or replace error-detected parts.

2. CHECK BRAKE SYSTEM

1. Check the brake fluid leakage: Refer to BR-11, "Inspection".
2. Check the brake piping: Refer to BR-25, "FRONT : Inspection" (front), BR-29, "REAR : Inspection" (rear).
3. Check the brake pedal: Refer to BR-8, "Inspection and Adjustment".
4. Check the master cylinder: Refer to BR-13, "Inspection".
5. Check the brake booster: Refer to BR-14, "Inspection".
6. Check the brake booster pressure sensor: Refer to BR-35, "Inspection".
7. Check the vacuum lines: Refer to BR-36, "Inspection".
8. Check the front disc brake: Refer to BR-45, "BRAKE CALIPER ASSEMBLY (2 PISTON TYPE) : Inspection" (2 piston type), BR-49, "BRAKE CALIPER ASSEMBLY (4 PISTON TYPE) : Inspection" (4 piston type).
9. Check the rear disc brake: Refer to BR-59, "BRAKE CALIPER ASSEMBLY (1 PISTON TYPE) : Inspection" (1 piston type), BR-63, "BRAKE CALIPER ASSEMBLY (2 PISTON TYPE) : Inspection" (2 piston type).

Is the inspection result normal?

YES >> GO TO 3.
NO >> Repair or replace error-detected parts.

3. PERFORM SELF-DIAGNOSIS

Perform self-diagnosis for “ABS” with CONSULT.

Is DTC “C1142” detected?

YES >> Replace ABS actuator and electric unit (control unit). Refer to BRC-112, "Exploded View".

NO >> Check the ABS actuator and electric unit (control unit) harness connector terminals for damage or loose connection with harness connector. If any items are damaged, repair or replace error-detected parts.

Special Repair Requirement

INFOID:0000000009361524

1. ADJUSTMENT OF STEERING ANGLE SENSOR NEUTRAL POSITION

Always perform the neutral position adjustment for the steering angle sensor, when replacing the ABS actuator and electric unit (control unit) or steering angle sensor and removing steering angle sensor. Refer to BRC-8, "ADJUSTMENT OF STEERING ANGLE SENSOR NEUTRAL POSITION : Special Repair Requirement"

>> END

C1143 STEERING ANGLE SENSOR

Description

INFOID:0000000009361525

The steering angle sensor detects the rotation amount, angular velocity and direction of the steering wheel, and transmits the data to the ABS actuator and electric unit (control unit) via CAN communication.

DTC Logic

INFOID:0000000009361526

DTC DETECTION LOGIC

DTC	Display item	Malfunction detected condition	Possible cause
C1143	ST ANG SEN CIRCUIT	Steering angle sensor is malfunctioning.	• Harness or connector • Steering angle sensor • ABS actuator and electric unit (control unit)

DTC CONFIRMATION PROCEDURE

1. PRECONDITIONING

If “DTC CONFIRMATION PROCEDURE” has been previously conducted, always turn the ignition switch OFF and wait at least 10 seconds before conducting the next test.

>> GO TO 2.

2. DTC REPRODUCTION PROCEDURE

1. Turn the ignition switch OFF to ON.
2. Perform self-diagnosis for “ABS” with CONSULT.

Is DTC “C1143” detected?

YES >> Proceed to diagnosis procedure. Refer to BRC-60, "Diagnosis Procedure".
NO >> INSPECTION END

Diagnosis Procedure

INFOID:0000000009361527

1. CHECK STEERING ANGLE SENSOR POWER SUPPLY

1. Turn the ignition switch OFF.
2. Disconnect steering angle sensor harness connector.
3. Check the voltage between steering angle sensor harness connector and ground.

Steering angle sensor		—	Voltage
Connector	Terminal		
M37	8	Ground	Approx. 0 V

4. Turn the ignition switch ON.
   CAUTION:
   Never start the engine.
5. Check the voltage between steering angle sensor harness connector and ground.

Steering angle sensor		—	Voltage
Connector	Terminal		
M37	8	Ground	Battery voltage

Is the inspection result normal?

YES >> GO TO 3.
NO >> GO TO 2.

2. CHECK STEERING ANGLE SENSOR CIRCUIT

1. Turn the ignition switch OFF.

2. Check the 10A fuse (#45).
3. Disconnect IPDM E/R harness connector.
4. Check the continuity between steering angle sensor harness connector and IPDM E/R harness connector.

Steering angle sensor		IPDM E/R		Continuity
Connector	Terminal	Connector	Terminal	
M37	8	E5	25	Existed

Is the inspection result normal?

YES >> Perform the trouble diagnosis for ignition power supply circuit. Refer to PG-31, "Wiring Diagram - IGNITION POWER SUPPLY -"
NO >> Repair or replace error-detected parts.

3. CHECK STEERING ANGLE SENSOR GROUND

Check the continuity between steering angle sensor harness connector and ground.

Steering angle sensor		—	Continuity
Connector	Terminal		
M37	7	Ground	Existed

Is the inspection result normal?

YES >> GO TO 4.
NO >> Repair or replace error-detected parts.

4. CHECK TERMINAL

1. Disconnect ABS actuator and electric unit (control unit) harness connector.
2. Check the ABS actuator and electric unit (control unit) pin terminals for damage or loose connection with harness connector.
3. Check the steering angle sensor pin terminals for damage or loose connection with harness connector.
4. Check the IPDM E/R pin terminals for damage or loose connection with harness connector.

Is the inspection result normal?

YES >> GO TO 5.
NO >> Repair or replace error-detected parts.

5. CHECK DATA LINE

Check the “STRG BRANCH LINE CIRCUIT”. Refer to LAN-46, "Diagnosis Procedure".

Is the inspection result normal?

YES >> Replace ABS actuator and electric unit (control unit). Refer to BRC-112, "Exploded View".
NO >> Repair or replace error-detected parts. Refer to BRC-104, "FOR USA AND CANADA : Precautions for Harness Repair" (for USA and Canada), BRC-106, "FOR MEXICO : Precautions for Harness Repair" (for Mexico).

Special Repair Requirement

INFOID:0000000009361528

1. ADJUSTMENT OF STEERING ANGLE SENSOR NEUTRAL POSITION

Always perform the neutral position adjustment for the steering angle sensor, when replacing the ABS actuator and electric unit (control unit) or steering angle sensor and removing steering angle sensor. Refer to BRC-8, "ADJUSTMENT OF STEERING ANGLE SENSOR NEUTRAL POSITION : Special Repair Requirement"

>> END

C1144 INCOMPLETE STEERING ANGLE SENSOR ADJUSTMENT

DTC Logic

INFOID:0000000009361529

DTC DETECTION LOGIC

DTC	Display item	Malfunction detected condition	Possible cause
C1144	ST ANG SEN SIGNAL	Neutral position of steering angle sensor is not finished.	• Harness or connector • Steering angle sensor • ABS actuator and electric unit (control unit)

DTC CONFIRMATION PROCEDURE

1. PRECONDITIONING

If “DTC CONFIRMATION PROCEDURE” has been previously conducted, always turn the ignition switch OFF and wait at least 10 seconds before conducting the next test.

>> GO TO 2.

2. DTC REPRODUCTION PROCEDURE

1. Turn the ignition switch OFF to ON.
2. Select “ABS”, “WORK SUPPORT” and “ST ANGLE SENSOR ADJUSTMENT” in order with CONSULT, and perform adjust the neutral position of steering angle sensor.
3. Perform self-diagnosis for “ABS” with CONSULT.

Is DTC “C1144” detected?

YES >> Proceed to diagnosis procedure. Refer to BRC-62, "Diagnosis Procedure".
NO >> INSPECTION END

Diagnosis Procedure

INFOID:0000000009361530

1. CHECK STEERING ANGLE SENSOR

Check the steering angle sensor. Refer to BRC-60, "Diagnosis Procedure".

Is the inspection result normal?

YES >> Replace ABS actuator and electric unit (control unit).
NO >> Repair or replace error-detected parts.

Special Repair Requirement

INFOID:0000000009361531

1. ADJUSTMENT OF STEERING ANGLE SENSOR NEUTRAL POSITION

Always perform the neutral position adjustment for the steering angle sensor, when replacing the ABS actuator and electric unit (control unit) or steering angle sensor and removing steering angle sensor. Refer to BRC-8, "ADJUSTMENT OF STEERING ANGLE SENSOR NEUTRAL POSITION : Special Repair Requirement"

>> END

C1145, C1146 YAW RATE/SIDE G SENSOR

Description

INFOID:0000000009361532

The yaw rate/side G sensor detects the yaw rate/side G affecting the vehicle, and transmits the data to the ABS actuator and electric unit (control unit) as an analog voltage signal.

DTC Logic

INFOID:0000000009361533

DTC DETECTION LOGIC

DTC	Display item	Malfunction detected condition	Possible cause
C1145	YAW RATE SENSOR	Yaw rate sensor is malfunctioning, or the yaw rate sensor signal line is open or shorted.	• Harness or connector • ABS actuator and electric unit (control unit) • Yaw rate/side G sensor
C1146	SIDE G-SEN CIRCUIT	Side G sensor is malfunctioning, or circuit of side G sensor is open or shorted.	

DTC CONFIRMATION PROCEDURE

1. PRECONDITIONING

If “DTC CONFIRMATION PROCEDURE” has been previously conducted, always turn the ignition switch OFF and wait at least 10 seconds before conducting the next test.

>> GO TO 2.

2. DTC REPRODUCTION PROCEDURE

1. Turn the ignition switch OFF to ON.
2. Perform self-diagnosis for “ABS” with CONSULT.

Is DTC “C1145” or “C1146” detected?

YES >> Proceed to diagnosis procedure. Refer to BRC-63, "Diagnosis Procedure".
NO >> INSPECTION END

Diagnosis Procedure

INFOID:0000000009361534

CAUTION:
- **Sudden turns (such as spin turns, acceleration turns), drifting, etc., when VDC function is off (VDC OFF switch “ON”) may cause yaw rate/side G sensor system to indicate a malfunction. However, this is not a malfunction, if normal operation can be resumed after restarting engine. Then erase memory of self-diagnosis.**
- **If vehicle is on turn-table at entrance to parking garage, or on other moving surface, VDC warning lamp may illuminate and CONSULT self-diagnosis may indicate yaw rate sensor system malfunction. However, in this case there is no malfunction in yaw rate sensor system. Take vehicle off of turn-table or other moving surface, and start the engine. Results will return to normal.**

1. CHECK YAW RATE/SIDE G SENSOR POWER SUPPLY

1. Turn the ignition switch OFF.
2. Disconnect yaw rate/side G sensor harness connector.
3. Check the voltage between yaw rate/side G sensor harness connector and ground.

Yaw rate/side G sensor		—	Voltage
Connector	Terminal		
M143	4	Ground	Approx. 0 V

4. Turn the ignition switch ON.
   CAUTION:
   Never start the engine.
5. Check the voltage between yaw rate/side G sensor harness connector and ground.

Yaw rate/side G sensor		—	Voltage
Connector	Terminal		
M143	4	Ground	Battery voltage

Is the inspection result normal?

YES >> GO TO 3.
NO >> GO TO 2.

2. CHECK YAW RATE/SIDE G SENSOR CIRCUIT

1. Turn the ignition switch OFF.
2. Check the 10A fuse (#45).
3. Disconnect IPDM E/R harness connector.
4. Check the continuity between yaw rate/side G sensor harness connector and IPDM E/R harness connector.

Yaw rate/side G sensor		IPDM E/R		Continuity
Connector	Terminal	Connector	Terminal	
M143	4	E5	25	Existed

Is the inspection result normal?

YES >> Perform the trouble diagnosis for ignition power supply circuit. Refer to PG-31, "Wiring Diagram - IGNITION POWER SUPPLY -".
NO >> Repair or replace error-detected parts.

3. CHECK YAW RATE/SIDE G SENSOR GROUND

Check the continuity between yaw rate/side G sensor harness connector and ground.

Yaw rate/side G sensor		—	Continuity
Connector	Terminal		
M143	1	Ground	Existed

Is the inspection result normal?

YES >> GO TO 4.
NO >> Repair or replace error-detected parts.

4. CHECK YAW RATE/SIDE G SENSOR HARNESS

1. Disconnect ABS actuator and electric unit (control unit) harness connector.
2. Check the continuity between yaw rate/side G sensor harness connector and ABS actuator electric unit (control unit) harness connector.

Yaw rate/side G sensor		ABS actuator electric unit (control unit)		Continuity
Connector	Terminal	Connector	Terminal	
M143	2	E41	25	Existed
	3		45	

Is the inspection result normal?

YES >> GO TO 5.
NO >> Repair or replace error-detected parts.

5. CHECK TERMINAL

1. Check the ABS actuator and electric unit (control unit) pin terminals for damage or loose connection with harness connector.
2. Check the yaw rate/side G sensor pin terminals for damage or loose connection with harness connector.
3. Check the IPDM E/R pin terminals for damage or loose connection with harness connector.

Is the inspection result normal?

YES >> GO TO 6.
NO >> Repair or replace error-detected parts.

6. REPLACE YAW RATE/SIDE G SENSOR

1. Replace yaw rate/side G sensor. Refer to BRC-114, "Exploded View".
2. Erase self-diagnosis results for “ABS” with CONSULT.
3. Turn the ignition switch OFF.
4. Turn the ignition switch ON.
   CAUTION:
   Never start the engine.
5. Perform self-diagnosis for “ABS” with CONSULT.

Is DTC “C1145” or “C1146” detected?

YES >> Replace ABS actuator and electric unit (control unit). Refer to BRC-112, "Exploded View".
NO >> INSPECTION END

Special Repair Requirement

INFOID:0000000009361535

1. ADJUSTMENT OF STEERING ANGLE SENSOR NEUTRAL POSITION

Always perform the neutral position adjustment for the steering angle sensor, when replacing the ABS actuator and electric unit (control unit) or steering angle sensor and removing steering angle sensor. Refer to BRC-8, "ADJUSTMENT OF STEERING ANGLE SENSOR NEUTRAL POSITION : Special Repair Requirement"

>> END

C1147, C1148, C1149, C1150 USV/HSV LINE

Description

INFOID:0000000009361536

USV1, USV2 (CUT VALVE)

The cut valve shuts off the normal brake fluid path from the master cylinder, when VDC/TCS is activated.

HSV1, HSV2 (SUCTION VALVE)

The suction valve supplies the brake fluid from the master cylinder to the pump, when VDC/TCS is activated.

DTC Logic

INFOID:0000000009361537

DTC DETECTION LOGIC

DTC	Display item	Malfunction detected condition	Possible cause
C1147	USV LINE[FL-RR]	VDC switch-over solenoid valve (USV1) on the primary side is open circuit or shorted, or the control line is open or shorted to the power supply or the ground.	• Harness or connector • ABS actuator and electric unit (control unit)
C1148	USV LINE[FR-RL]	VDC switch-over solenoid valve (USV2) on the primary side is open circuit or shorted, or the control line is open or shorted to the power supply or the ground.	
C1149	HSV LINE[FL-RR]	VDC switch-over solenoid valve (HSV1) on the primary side is open circuit or shorted, or the control line is open or shorted to the power supply or the ground.	
C1150	HSV LINE[FR-RL]	VDC switch-over solenoid valve (HSV2) on the primary side is open circuit or shorted, or the control line is open or shorted to the power supply or the ground.	

DTC CONFIRMATION PROCEDURE

1. PRECONDITIONING

If “DTC CONFIRMATION PROCEDURE” has been previously conducted, always turn the ignition switch OFF and wait at least 10 seconds before conducting the next test.

>> GO TO 2.

2. DTC REPRODUCTION PROCEDURE

1. Turn the ignition switch OFF to ON.
2. Perform self-diagnosis for “ABS” with CONSULT.

Is DTC “C1147”, “C1148”, “C1149” or “C1150” detected?

YES >> Proceed to diagnosis procedure. Refer to BRC-66, "Diagnosis Procedure".
NO >> INSPECTION END

Diagnosis Procedure

INFOID:0000000009361538

1. CHECK VDC SWITCH-OVER VALVE POWER SUPPLY

1. Turn the ignition switch OFF.
2. Disconnect ABS actuator and electric unit (control unit) harness connector.
3. Check the 30A fusible link (#L).
4. Check the voltage between ABS actuator and electric unit (control unit) harness connector and ground.

ABS actuator and electric unit (control unit)		—	Voltage
Connector	Terminal		
E41	3	Ground	Battery voltage

Is the inspection result normal?

YES >> GO TO 2.

NO >> Perform the trouble diagnosis for battery power supply circuit. Refer to PG-6, "Wiring Diagram - BATTERY POWER SUPPLY -".

2. CHECK VDC SWITCH-OVER VALVE GROUND

Check the continuity between ABS actuator and electric unit (control unit) harness connector and ground.

ABS actuator and electric unit (control unit)		—	Continuity
Connector	Terminal		
E41	1	Ground	Existed
	4		

Is the inspection result normal?

YES >> GO TO 3.
NO >> Repair or replace error-detected parts.

3. CHECK TERMINAL

Check the ABS actuator and electric unit (control unit) pin terminals for damage or loose connection with harness connector.

Is the inspection result normal?

YES >> Replace ABS actuator and electric unit (control unit). Refer to BRC-112, "Exploded View".
NO >> Repair or replace error-detected parts.

Special Repair Requirement

INFOID:0000000009361539

1. ADJUSTMENT OF STEERING ANGLE SENSOR NEUTRAL POSITION

Always perform the neutral position adjustment for the steering angle sensor, when replacing the ABS actuator and electric unit (control unit) or steering angle sensor and removing steering angle sensor. Refer to BRC-8, "ADJUSTMENT OF STEERING ANGLE SENSOR NEUTRAL POSITION : Special Repair Requirement"

>> END

C1155 BRAKE FLUID LEVEL SWITCH

Description

INFOID:0000000009361540

The brake fluid level switch converts the brake fluid level to an electric signal and transmits it to the ABS actuator and electric unit (control unit).

DTC Logic

INFOID:0000000009361541

DTC DETECTION LOGIC

DTC	Display item	Malfunction detected condition	Possible cause
C1155	BR FLUID LEVEL LOW	Brake fluid level is low or communication line between the ABS actuator and electric unit (control unit) and brake fluid level switch is open or shorted.	• Harness or connector • Brake fluid level switch • Combination meter

DTC CONFIRMATION PROCEDURE

1. PRECONDITIONING

If “DTC CONFIRMATION PROCEDURE” has been previously conducted, always turn the ignition switch OFF and wait at least 10 seconds before conducting the next test.

>> GO TO 2.

2. DTC REPRODUCTION PROCEDURE

1. Turn the ignition switch OFF to ON.
2. Perform self-diagnosis for “ABS” with CONSULT.

Is DTC “C1155” detected?

YES >> Proceed to diagnosis procedure. Refer to BRC-68, "Diagnosis Procedure".
NO >> INSPECTION END

Diagnosis Procedure

INFOID:0000000009361542

1. CHECK BRAKE FLUID LEVEL

1. Turn the ignition switch OFF.
2. Check the brake fluid level. Refer to BR-11, "Inspection".

Is the inspection result normal?

YES >> GO TO 2.
NO >> Refill brake fluid. Refer to BR-11, "Refilling".

2. PERFORM SELF-DIAGNOSIS (1)

1. Erase self-diagnosis result for “ABS” with CONSULT.
2. Turn the ignition switch OFF, and wait 10 seconds or more.
3. Turn the ignition switch ON.
   CAUTION:
   Never start the engine.
4. Perform self-diagnosis for “ABS” with CONSULT.

Is DTC “C1155” detected?

YES >> INSPECTION END
NO >> GO TO 3.

3. CHECK BRAKE FLUID LEVEL SWITCH

Check the brake fluids level switch. Refer to BRC-70, "Component Inspection".

Is the inspection result normal?

YES >> GO TO 5.
NO >> Replace reservoir tank. Refer to BR-30, "Exploded View". GO TO 4.

4. PERFORM SELF-DIAGNOSIS (2)

1. Erase self-diagnosis result for “ABS” with CONSULT.
2. Turn the ignition switch OFF, and wait 10 seconds or more.
3. Turn the ignition switch ON.
   CAUTION:
   Never start the engine.
4. Perform self-diagnosis for “ABS” with CONSULT.

Is DTC “C1155” detected?

YES >> INSPECTION END
NO >> GO TO 5.

5. CHECK CONNECTOR AND TERMINAL

1. Turn the ignition switch OFF.
2. Disconnect brake fluid level switch harness connector.
3. Check the brake fluid level switch harness connector for disconnection or looseness.
4. Check the brake fluid level switch pin terminals for damage or loose connection with harness connector.
5. Disconnect combination meter harness connector.
6. Check the combination meter harness connector for disconnection or looseness.
7. Check the combination meter pin terminals for damage or loose connection with harness connector.
8. Disconnect ABS actuator and electric unit (control unit) harness connector.
9. Check the ABS actuator and electric unit (control unit) harness connector harness connector for disconnection or looseness.
10. Check the ABS actuator and electric unit (control unit) harness connector pin terminals for damage or loose connection with harness connector.

Is the inspection result normal?

YES >> GO TO 7.
NO >> Repair or replace error-detected parts. GO TO 6.

6. PERFORM SELF-DIAGNOSIS (3)

1. Connect brake fluid level switch harness connector.
2. Connect combination meter harness connector.
3. Connect ABS actuator and electric unit (control unit) harness connector.
4. Erase self-diagnosis result for “ABS” with CONSULT.
5. Turn the ignition switch OFF, and wait 10 seconds or more.
6. Turn the ignition switch ON.
   CAUTION:
   Never start the engine.
7. Perform self-diagnosis for “ABS” with CONSULT.

Is DTC “C1155” detected?

YES >> INSPECTION END
NO >> GO TO 7.

7. CHECK BRAKE FLUID LEVEL SWITCH HARNESS

1. Turn the ignition switch OFF.
2. Disconnect brake fluid level switch harness connector.
3. Disconnect combination meter harness connector.
4. Check the continuity between brake fluid level switch harness connector and combination meter harness connector.

Brake fluid level switch		Combination meter		Continuity
Connector	Terminal	Connector	Terminal	
E47	1	M54	27	Existed

Is the inspection result normal?

YES >> GO TO 8.
NO >> Repair or replace error-detected parts.

8. CHECK BRAKE FLUID LEVEL SWITCH GROUND

Check the continuity between brake fluid level switch harness connector and ground.

Brake fluid level switch		—	Continuity
Connector	Terminal		
E47	2	Ground	Existed

Is the inspection result normal?

YES >> GO TO 9.
NO >> Repair or replace error-detected parts.

9. CHECK COMBINATION METER

Check the combination meter. Refer to MWI-34, "CONSULT Function (METER/M&A)".

Is the inspection result normal?

YES >> Replace ABS actuator and electric unit (control unit). Refer to BRC-112, "Exploded View".
NO >> Repair or replace combination meter. Refer to MWI-103, "Exploded View".

Component Inspection

INFOID:0000000009361543

1. CHECK BRAKE FLUID LEVEL SWITCH

1. Turn the ignition switch OFF.
2. Disconnect brake fluid level switch harness connector.
3. Check the continuity between brake fluid level switch harness connector.

Brake fluid level switch	Condition	Continuity
Terminal		
1 – 2	When brake fluid is full in the reservoir tank.	Not existed
	When brake fluid is empty in the reservoir tank.	Existed

Is the inspection result normal?

YES >> INSPECTION END
NO >> Replace reservoir tank. Refer to BR-30, "Exploded View".

Special Repair Requirement

INFOID:0000000009361544

1. ADJUSTMENT OF STEERING ANGLE SENSOR NEUTRAL POSITION

Always perform the neutral position adjustment for the steering angle sensor, when replacing the ABS actuator and electric unit (control unit) or steering angle sensor and removing steering angle sensor. Refer to BRC-8, "ADJUSTMENT OF STEERING ANGLE SENSOR NEUTRAL POSITION : Special Repair Requirement"

>> END

U1000 CAN COMM CIRCUIT

Description

INFOID:0000000009361545

CAN (Controller Area Network) is a serial communication line for real time application. It is an on-vehicle multiplex communication line with high data communication speed and excellent error detection ability. Many electronic control units are equipped onto a vehicle, and each control unit shares information and links with other control units during operation (not independent). In CAN communication, control units are connected with 2 communication lines (CAN-H line, CAN-L line) allowing a high rate of information transmission with less wiring. Each control unit transmits/receives data but selectively reads required data only.

DTC Logic

INFOID:0000000009361546

DTC DETECTION LOGIC

DTC	Display item	Malfunction detected condition	Possible cause
U1000	CAN COMM CIRCUIT	When ABS actuator and electric unit (control unit) is not transmitting or receiving CAN communication signal for 2 seconds or more.	• CAN communication line • ABS actuator and electric unit (control unit)

DTC CONFIRMATION PROCEDURE

1. PRECONDITIONING

If “DTC CONFIRMATION PROCEDURE” has been previously conducted, always turn the ignition switch OFF and wait at least 10 seconds before conducting the next test.

>> GO TO 2.

2. DTC REPRODUCTION PROCEDURE

1. Turn the ignition switch OFF to ON.
2. Perform self-diagnosis for “ABS” with CONSULT.

Is DTC “U1000” detected?

YES >> Proceed to diagnosis procedure. Refer to BRC-71, "Diagnosis Procedure".
NO >> INSPECTION END

Diagnosis Procedure

INFOID:0000000009361547

1. PERFORM ABS ACTUATOR AND ELECTRIC UNIT (CONTROL UNIT)

Perform self-diagnosis for “ABS” with CONSULT.

Is DTC “U1000” detected?

YES >> Proceed to diagnosis procedure. Refer to LAN-15, "Trouble Diagnosis Flow Chart".
NO >> INSPECTION END

Special Repair Requirement

INFOID:0000000009361548

1. ADJUSTMENT OF STEERING ANGLE SENSOR NEUTRAL POSITION

Always perform the neutral position adjustment for the steering angle sensor, when replacing the ABS actuator and electric unit (control unit) or steering angle sensor and removing steering angle sensor. Refer to BRC-8, "ADJUSTMENT OF STEERING ANGLE SENSOR NEUTRAL POSITION : Special Repair Requirement"

>> END

U1002 SYSTEM COMM (CAN)

Description

INFOID:0000000009361549

CAN (Controller Area Network) is a serial communication line for real time application. It is an on-vehicle multiplex communication line with high data communication speed and excellent error detection ability. Many electronic control units are equipped onto a vehicle, and each control unit shares information and links with other control units during operation (not independent). In CAN communication, control units are connected with 2 communication lines (CAN-H line, CAN-L line) allowing a high rate of information transmission with less wiring. Each control unit transmits/receives data but selectively reads required data only.

DTC Logic

INFOID:0000000009361550

DTC DETECTION LOGIC

DTC	Display item	Malfunction detected condition	Possible cause
U1002	SYSTEM COMM (CAN)	When ABS actuator and electric unit (control unit) is not transmitting or receiving CAN communication signal for 2 seconds or less.	• CAN communication line • ABS actuator and electric unit (control unit)

DTC CONFIRMATION PROCEDURE

1. PRECONDITIONING

If “DTC CONFIRMATION PROCEDURE” has been previously conducted, always turn the ignition switch OFF and wait at least 10 seconds before conducting the next test.

>> GO TO 2.

2. DTC REPRODUCTION PROCEDURE

1. Turn the ignition switch OFF to ON.
2. Perform self-diagnosis for “ABS” with CONSULT.

Is DTC “U1002” detected?

YES >> Proceed to diagnosis procedure. Refer to BRC-72, "Diagnosis Procedure".
NO >> INSPECTION END

Diagnosis Procedure

INFOID:0000000009361551

CAUTION:
- **Never apply 7.0 V or more to the measurement terminal.**
- **Use a tester with open terminal voltage of 7.0 V or less.**
- **Turn the ignition switch OFF and disconnect the battery cable from the negative terminal when checking the harness.**

1. CHECK CAN DIAGNOSIS SUPPORT MONITOR

1. Select “ABS” and “CAN Diagnosis Support Monitor” in order with CONSULT.
2. Check the malfunction history between each control unit connected to ABS actuator and electric unit (control unit).

Check the result of “PAST”?

All items are “OK”>>Check the intermittent incident. Refer to GI-45, "Intermittent Incident".
“TRANSMIT DIAG” is other than “OK”>>GO TO 2.
A control unit other than ABS actuator and electric unit (control unit) is anything other than “OK”>>GO TO 3.

2. CHECK TRANSMITTING SIDE UNIT

Check the ABS actuator and electric unit (control unit) harness connector terminals No. 14 and 35 for damage or loose connection.

Is the inspection result normal?

YES >> Erase self-diagnosis results. Then perform self-diagnosis for “ABS” with CONSULT.
NO >> Recheck the terminals for damage or loose connection. Refer to LAN-5, "Precautions for Harness Repair".

3. CHECK APPLICABLE CONTROL UNIT

Check the terminals of each harness connector for damage or loose connection.

Is the inspection result normal?

YES >> Erase self-diagnosis results. Then perform self-diagnosis for applicable control unit with CONSULT.

NO >> Recheck the terminals for damage or loose connection. Refer to LAN-5, "Precautions for Harness Repair".

Special Repair Requirement

INFOID:0000000009361552

1. ADJUSTMENT OF STEERING ANGLE SENSOR NEUTRAL POSITION

Always perform the neutral position adjustment for the steering angle sensor, when replacing the ABS actuator and electric unit (control unit) or steering angle sensor and removing steering angle sensor. Refer to BRC-8, "ADJUSTMENT OF STEERING ANGLE SENSOR NEUTRAL POSITION : Special Repair Requirement"

>> END

POWER SUPPLY AND GROUND CIRCUIT

Description

INFOID:0000000009361553

Supplies power to ABS actuator and electric unit (control unit).

Diagnosis Procedure

INFOID:0000000009361554

1. CHECK ABS ACTUATOR AND ELECTRIC UNIT (CONTROL UNIT) IGNITION POWER SUPPLY

1. Turn the ignition switch OFF.
2. Disconnect ABS actuator and electric unit (control unit) harness connector.
3. Check the voltage between ABS actuator and electric unit (control unit) harness connector and ground.

ABS actuator and electric unit (control unit)		—	Voltage
Connector	Terminal		
E41	28	Ground	Approx. 0 V

4. Turn the ignition switch ON.
   CAUTION:
   Never start the engine.
5. Check the voltage between ABS actuator and electric unit (control unit) harness connector and ground.

ABS actuator and electric unit (control unit)		—	Voltage
Connector	Terminal		
E41	28	Ground	Battery voltage

Is the inspection result normal?

YES >> GO TO 3.
NO >> GO TO 2.

2. CHECK ABS ACTUATOR AND ELECTRIC UNIT (CONTROL UNIT) POWER SUPPLY CIRCUIT

1. Turn the ignition switch OFF.
2. Check the 10A fuse (#45).
3. Disconnect IPDM E/R harness connector.
4. Check the continuity between ABS actuator and electric unit (control unit) harness connector and IPDM E/R harness connector.

ABS actuator and electric unit (control unit)		IPDM E/R		Continuity
Connector	Terminal	Connector	Terminal	
E41	28	E5	25	Existed

5. Check the continuity between ABS actuator and electric unit (control unit) harness connector and ground.

ABS actuator and electric unit (control unit)		—	Continuity
Connector	Terminal		
E41	28	Ground	No existed

Is the inspection result normal?

YES >> Perform the trouble diagnosis for ignition power supply circuit. Refer to PG-31, "Wiring Diagram - IGNITION POWER SUPPLY -".
NO >> Repair or replace error-detected parts.

3. CHECK ABS ACTUATOR AND ELECTRIC UNIT (CONTROL UNIT) POWER SUPPLY

1. Turn the ignition switch OFF.
2. Check the 50A fusible link (#H) and 30A fusible link (#L).
3. Check the voltage between ABS actuator and electric unit (control unit) harness connector and ground.

ABS actuator and electric unit (control unit)		—	Voltage
Connector	Terminal		
E41	2	Ground	Battery voltage
	3		

Is the inspection result normal?

YES >> GO TO 4.
NO >> Perform the trouble diagnosis for battery power supply circuit. Refer to PG-6, "Wiring Diagram - BATTERY POWER SUPPLY -".

4. CHECK ABS ACTUATOR AND ELECTRIC UNIT (CONTROL UNIT) GROUND

Check the continuity between ABS actuator and electric unit (control unit) harness connector and ground.

ABS actuator and electric unit (control unit)		—	Continuity
Connector	Terminal		
E41	1	Ground	Existed
	4		

Is the inspection result normal?

YES >> INSPECTION END
NO >> Repair or replace error-detected parts.

PARKING BRAKE SWITCH

Description

INFOID:0000000009361555

Operate the parking brake lever, and brake warning lamp in the combination meter turns ON/OFF correctly.

Diagnosis Procedure

INFOID:0000000009361556

1. CHECK PARKING BRAKE SWITCH CIRCUIT

1. Turn the ignition switch OFF.
2. Disconnect parking brake switch harness connector.
3. Disconnect combination meter harness connector.
4. Check the continuity between parking brake switch harness connector and combination meter harness connector.

Parking brake switch		Combination meter		Continuity
Connector	Terminal	Connector	Terminal	
M68	1	M54	26	Existed

5. Check the continuity between parking brake switch harness connector and ground.

Parking brake switch		—	Continuity
Connector	Terminal		
M68	1	Ground	Not existed

Is the inspection result normal?

YES >> GO TO 2.
NO >> Repair or replace error-detected parts.

2. CHECK PARKING BRAKE SWITCH

Check the parking brake switch. Refer to BRC-76, "Component Inspection".

Is the inspection result normal?

YES >> GO TO 3.
NO >> Replace parking brake switch. Refer to PB-6, "Exploded View".

3. CHECK CONNECTOR

Check the connector and terminal for deformation, disconnection, looseness, etc.

Is the inspection result normal?

YES >> GO TO 4.
NO >> Repair or replace error-detected parts.

4. CHECK PARKING BRAKE SWITCH SIGNAL

Select “ABS”, “DATA MONITOR” and “PARK BRAKE SW” in order with CONSULT, and perform the parking brake switch inspection.

Condition	PARK BRAKE SW (DATA MONITOR)
Parking brake lever is active	On
Parking brake lever is inactive	Off

Is the inspection result normal?

YES >> INSPECTION END
NO >> Check the combination meter. Refer to MWI-34, "CONSULT Function (METER/M&A)".

Component Inspection

INFOID:0000000009361557

1. CHECK PARKING BRAKE SWITCH

1. Turn the ignition switch OFF.

2. Disconnect parking brake switch harness connector.
3. Check the continuity between parking brake switch connector terminal.

Parking brake switch Terminal	—	Condition	Continuity
1	Ground	When the parking brake switch is operated.	Existed
		When the parking brake switch is not operated.	Not existed

Is the inspection result normal?

YES >> INSPECTION END
NO >> Replace parking brake switch. Refer to PB-6, "Exploded View".

VDC OFF SWITCH

Description

INFOID:0000000009361558

VDC OFF switch can deactivate (turn OFF) the VDC/TCS function by pressing the VDC OFF switch.

Diagnosis Procedure

INFOID:0000000009361559

1.CHECK VDC OFF SWITCH CIRCUIT

1. Turn the ignition switch OFF.
2. Disconnect ABS actuator and electric unit (control unit) harness connector.
3. Disconnect VDC OFF switch harness connector.
4. Check the continuity between VDC OFF switch harness connector and ABS actuator and electric unit (control unit) harness connector.

ABS actuator and electric unit (control unit)		VDC OFF switch		Continuity
Connector	Terminal	Connector	Terminal	
E41	31	M19	1	Existed

5. Check the continuity between VDC OFF switch harness connector and ground.

VDC OFF switch		—	Continuity
Connector	Terminal		
M19	1	Ground	Not existed
	2		Existed

Is the inspection result normal?

YES >> GO TO 2.
NO >> Repair or replace error-detected parts.

2.CHECK VDC OFF SWITCH

Check the VDC OFF switch. Refer to BRC-79, "Component Inspection".

Is the inspection result normal?

YES >> GO TO 3.
NO >> Replace VDC OFF switch.

3.CHECK CONNECTOR

1. Disconnect combination meter harness connector.
2. Check the connector and terminal for deformation, disconnection, looseness, etc.

Is the inspection result normal?

YES >> GO TO 4.
NO >> Repair or replace error-detected parts.

4.CHECK VDC OFF SWITCH SIGNAL

Select “ABS”, “DATA MONITOR” and “OFF SW” in order with CONSULT, and perform the VDC OFF switch inspection.

Condition	OFF SW (DATA MONITOR)
Press the VDC OFF switch when VDC OFF indicator lamp is OFF.	On
Press the VDC OFF switch when VDC OFF indicator lamp is ON.	Off

Is the inspection result normal?

YES >> INSPECTION END
NO >> Replace ABS actuator and electric unit (control unit). Refer to BRC-112, "Exploded View".

Component Inspection

INFOID:0000000009361560

1. CHECK VDC OFF SWITCH

1. Turn the ignition switch OFF.
2. Disconnect VDC OFF switch harness connector.
3. Check the continuity between VDC OFF switch connector terminals.

VDC OFF switch Terminal	Condition	Continuity
1 – 2	When VDC OFF switch is hold pressed.	Existed
	When releasing VDC OFF switch.	Not existed

Is the inspection result normal?

YES >> INSPECTION END
NO >> Replace VDC OFF switch. Refer to BRC-116, "Removal and Installation".

Special Repair Requirement

INFOID:0000000009361561

1. ADJUSTMENT OF STEERING ANGLE SENSOR NEUTRAL POSITION

Always perform the neutral position adjustment for the steering angle sensor, when replacing the ABS actuator and electric unit (control unit) or steering angle sensor and removing steering angle sensor. Refer to BRC-8, "ADJUSTMENT OF STEERING ANGLE SENSOR NEUTRAL POSITION : Special Repair Requirement"

>> END

ABS WARNING LAMP

Description

INFOID:0000000009361562

×: ON –: OFF

Condition	ABS warning lamp
Ignition switch OFF	–
For 3 seconds after turning ignition switch ON	×
3 seconds later after turning ignition switch ON	–
ABS function is malfunctioning.	×
EBD function is malfunctioning.	×

Component Function Check

INFOID:0000000009361563

1.CHECK ABS WARNING LAMP OPERATION

Check that the lamp illuminates for approximately 3 seconds after the ignition switch is turned ON.

Is the inspection result normal?

YES >> INSPECTION END
NO >> Proceed to diagnosis procedure. Refer to BRC-80, "Diagnosis Procedure".

Diagnosis Procedure

INFOID:0000000009361564

1.PERFORM SELF-DIAGNOSIS

Perform self-diagnosis for “ABS” with CONSULT.

Is any DTC detected?

YES >> Check the DTC.
NO >> GO TO 2.

2.CHECK COMBINATION METER

Check if the indication and operation of combination meter are normal. Refer to MWI-33, "Diagnosis Description".

Is the inspection result normal?

YES >> Replace ABS actuator and electric unit (control unit). Refer to BRC-112, "Exploded View".
NO >> Repair or replace error-detected parts.

Special Repair Requirement

INFOID:0000000009361565

1.ADJUSTMENT OF STEERING ANGLE SENSOR NEUTRAL POSITION

Always perform the neutral position adjustment for the steering angle sensor, when replacing the ABS actuator and electric unit (control unit) or steering angle sensor and removing steering angle sensor. Refer to BRC-8, "ADJUSTMENT OF STEERING ANGLE SENSOR NEUTRAL POSITION : Special Repair Requirement"

>> END

BRAKE WARNING LAMP

Description

INFOID:0000000009361566

×: ON –: OFF

Condition	Brake warning lamp (Note 1)
Ignition switch OFF	–
For 3 seconds after turning ignition switch ON	× (Note 2)
3 seconds later after turning ignition switch ON	× (Note 2)
EBD function is malfunctioning.	×

NOTE:

- 1: Brake warning lamp will turn on in case of parking brake operation (when switch is ON) or of brake fluid level switch operation (when brake fluid is insufficient).
- 2: After starting the engine, brake warning lamp is turned off.

Component Function Check

INFOID:0000000009361567

1. BRAKE WARNING LAMP OPERATION CHECK 1

Check that the lamp illuminates for approximately 3 seconds after the ignition switch is turned ON.

Is the inspection result normal?

YES >> GO TO 2.
NO >> Proceed to diagnosis procedure. Refer to BRC-81, "Diagnosis Procedure".

2. BRAKE WARNING LAMP OPERATION CHECK 2

Check that the brake warning lamp in the combination meter turns ON/OFF correctly when operating the parking brake pedal.

Is the inspection result normal?

YES >> INSPECTION END
NO >> Check the parking brake switch. Refer to BRC-76, "Component Inspection".

Diagnosis Procedure

INFOID:0000000009361568

1. PERFORM SELF-DIAGNOSIS

Perform self-diagnosis for “ABS” with CONSULT.

Is any DTC detected?

YES >> Check the DTC.
NO >> GO TO 2.

2. CHECK COMBINATION METER

Check if the indication and operation of combination meter are normal. Refer to MWI-33, "Diagnosis Description".

Is the inspection result normal?

YES >> Replace ABS actuator and electric unit (control unit). Refer to BRC-112, "Exploded View".
NO >> Repair or replace error-detected parts.

Special Repair Requirement

INFOID:0000000009361569

1. ADJUSTMENT OF STEERING ANGLE SENSOR NEUTRAL POSITION

Always perform the neutral position adjustment for the steering angle sensor, when replacing the ABS actuator and electric unit (control unit) or steering angle sensor and removing steering angle sensor. Refer to BRC-8, "ADJUSTMENT OF STEERING ANGLE SENSOR NEUTRAL POSITION : Special Repair Requirement"

>> END

VDC WARNING LAMP

Description

INFOID:0000000009361570

×: ON △: Blink –: OFF

Condition	VDC warning lamp
Ignition switch OFF	–
For 3 seconds after turning ignition switch ON	×
3 seconds later after turning ignition switch ON	–
VDC/TCS is activated while driving	△
VDC/TCS function is malfunctioning.	×
ABS function is malfunctioning.	×
EBD function is malfunctioning.	×

Component Function Check

INFOID:0000000009361571

1. CHECK VDC WARNING LAMP OPERATION

Check that the lamp illuminates for approximately 3 seconds after the ignition switch is turned ON.

Is the inspection result normal?

YES >> INSPECTION END
NO >> Proceed to diagnosis procedure. Refer to BRC-82, "Diagnosis Procedure".

Diagnosis Procedure

INFOID:0000000009361572

1. PERFORM SELF-DIAGNOSIS

Perform self-diagnosis for “ABS” with CONSULT.

Is any DTC detected?

YES >> Check the DTC.
NO >> GO TO 2.

2. CHECK COMBINATION METER

Check if the indication and operation of combination meter are normal. Refer to MWI-33, "Diagnosis Description".

Is the inspection result normal?

YES >> Replace ABS actuator and electric unit (control unit). Refer to BRC-112, "Exploded View".
NO >> Repair or replace error-detected parts.

Special Repair Requirement

INFOID:0000000009361573

1. ADJUSTMENT OF STEERING ANGLE SENSOR NEUTRAL POSITION

Always perform the neutral position adjustment for the steering angle sensor, when replacing the ABS actuator and electric unit (control unit) or steering angle sensor and removing steering angle sensor. Refer to BRC-8, "ADJUSTMENT OF STEERING ANGLE SENSOR NEUTRAL POSITION : Special Repair Requirement"

>> END

VDC OFF INDICATOR LAMP

Description

INFOID:0000000009361574

×: ON –: OFF

Condition	VDC OFF indicator lamp
Ignition switch OFF	–
For 3 seconds after turning ignition switch ON	×
3 seconds later after turning ignition switch ON	–
VDC OFF switch turned ON. (VDC function is OFF.)	×
VDC/TCS function is malfunctioning.	–

Component Function Check

INFOID:0000000009361575

1. VDC OFF INDICATOR LAMP OPERATION CHECK 1

Check that the lamp illuminates for approximately 3 seconds after the ignition switch is turned ON.

Is the inspection result normal?

YES >> GO TO 2.
NO >> Proceed to diagnosis procedure. Refer to BRC-83, "Diagnosis Procedure".

2. VDC OFF INDICATOR LAMP OPERATION CHECK 2

Check that the VDC OFF indicator lamp in the combination meter turns ON/OFF correctly when operating the VDC OFF switch.

Is the inspection result normal?

YES >> INSPECTION END
NO >> Check the VDC OFF switch. Refer to BRC-79, "Component Inspection".

Diagnosis Procedure

INFOID:0000000009361576

1. CHECK ABS ACTUATOR AND ELECTRIC UNIT (CONTROL UNIT) POWER SUPPLY AND GROUND CIRCUIT

Perform diagnosis of ABS actuator and electric unit (control unit) power supply and ground circuit. Refer to BRC-74, "Diagnosis Procedure".

Is the inspection result normal?

YES >> GO TO 2.
NO >> Repair or replace error-detected parts.

2. CHECK VDC OFF INDICATOR LAMP SIGNAL (1)

1. Select “ABS”, “DATA MONITOR” and “OFF LAMP” according to this order with CONSULT.
2. Turn the ignition switch OFF.
3. Check that data monitor displays “On” for approx. 1 second after ignition switch is turned ON, and then changes to “Off”.
   CAUTION:
   Never start engine.

Is the inspection result normal?

YES >> GO TO 3.
NO >> Replace ABS actuator and electric unit (control unit). Refer to BRC-112, "Removal and Installation".

3. CHECK VDC OFF INDICATOR LAMP SIGNAL (2)

1. Select “ABS”, “DATA MONITOR” and “OFF LAMP” according to this order with CONSULT.
2. Check that data monitor displays “On” or “Off” each time when VDC OFF switch is operated.

Is the inspection result normal?

YES >> Check the combination meter. Refer to MWI-34, "CONSULT Function (METER/M&A)".
NO >> Check the VDC OFF switch system. Refer to BRC-78, "Diagnosis Procedure".

Special Repair Requirement

INFOID:0000000009361577

1. ADJUSTMENT OF STEERING ANGLE SENSOR NEUTRAL POSITION

Always perform the neutral position adjustment for the steering angle sensor, when replacing the ABS actuator and electric unit (control unit) or steering angle sensor and removing steering angle sensor. Refer to BRC-8, "ADJUSTMENT OF STEERING ANGLE SENSOR NEUTRAL POSITION : Special Repair Requirement"

>> END

ECU DIAGNOSIS INFORMATION

ABS ACTUATOR AND ELECTRIC UNIT (CONTROL UNIT)

Reference Value

INFOID:0000000009361578

VALUES ON THE DIAGNOSIS TOOL

CAUTION:

The display shows the control unit calculation data, so a normal value might be displayed even in the event the output circuit (harness) is open or short-circuited.

NOTE:

The following table includes information (items) inapplicable to this vehicle. For information (items) applicable to this vehicle, refer to CONSULT display items.

Monitor item	Display content	Data monitor	
		Condition	Reference value in normal operation
FR LH SENSOR	Wheel speed	Vehicle stopped	0 [km/h (MPH)]
		Vehicle running (Note 1)	Nearly matches the speedometer display (± 10% or less)
FR RH SENSOR	Wheel speed	Vehicle stopped	0 [km/h (MPH)]
		Vehicle running (Note 1)	Nearly matches the speedometer display (± 1% or less)
RR LH SENSOR	Wheel speed	Vehicle stopped	0 [km/h (MPH)]
		Vehicle running (Note 1)	Nearly matches the speedometer display (± 10% or less)
RR RH SENSOR	Wheel speed	Vehicle stopped	0 [km/h (MPH)]
		Vehicle running (Note 1)	Nearly matches the speedometer display (± 10% or less)
FR RH IN SOL	Operation status of each solenoid valve	Actuator (solenoid valve) is active ("ACTIVE TEST" with CONSULT)	On
		When the actuator (solenoid valve) is not active and actuator relay is active (ignition switch ON)	Off
FR RH OUT SOL	Operation status of each solenoid valve	Actuator (solenoid valve) is active ("ACTIVE TEST" with CONSULT)	On
		When the actuator (solenoid valve) is not active and actuator relay is active (ignition switch ON)	Off
FR LH IN SOL	Operation status of each solenoid valve	Actuator (solenoid valve) is active ("ACTIVE TEST" with CONSULT)	On
		When the actuator (solenoid valve) is not active and actuator relay is active (ignition switch ON)	Off
FR LH OUT SOL	Operation status of each solenoid valve	Actuator (solenoid valve) is active ("ACTIVE TEST" with CONSULT)	On
		When the actuator (solenoid valve) is not active and actuator relay is active (ignition switch ON)	Off

Monitor item	Display content	Data monitor	
		Condition	Reference value in normal operation
RR RH IN SOL	Operation status of each solenoid valve	Actuator (solenoid valve) is active (“ACTIVE TEST” with CONSULT)	On
		When the actuator (solenoid valve) is not active and actuator relay is active (ignition switch ON)	Off
RR RH OUT SOL	Operation status of each solenoid valve	Actuator (solenoid valve) is active (“ACTIVE TEST” with CONSULT)	On
		When the actuator (solenoid valve) is not active and actuator relay is active (ignition switch ON)	Off
RR LH IN SOL	Operation status of each solenoid valve	Actuator (solenoid valve) is active (“ACTIVE TEST” with CONSULT)	On
		When the actuator (solenoid valve) is not active and actuator relay is active (ignition switch ON)	Off
RR LH OUT SOL	Operation status of each solenoid valve	Actuator (solenoid valve) is active (“ACTIVE TEST” with CONSULT)	On
		When the actuator (solenoid valve) is not active and actuator relay is active (ignition switch ON)	Off
STOP LAMP SW	Stop lamp switch signal status	When brake pedal is depressed	On
		When brake pedal is not depressed	Off
MOTOR RELAY	Motor and motor relay operation	When the motor relay and motor are operating	On
		When the motor relay and motor are not operating	Off
ACTUATOR RLY (Note 2)	Actuator relay operation	When the actuator relay is operating	On
		When the actuator relay is not operating	Off
ABS WARN LAMP	ABS warning lamp (Note 3)	When ABS warning lamp is ON	On
		When ABS warning lamp is OFF	Off
OFF LAMP	VDC OFF indicator lamp (Note 3)	When VDC OFF indicator lamp is ON	On
		When VDC OFF indicator lamp is OFF	Off
OFF SW	VDC OFF switch ON/OFF	VDC OFF switch ON (When VDC OFF indicator lamp is ON)	On
		VDC OFF switch OFF (When VDC OFF indicator lamp is OF)	Off
SLIP/VDC LAMP	VDC warning lamp (Note 3)	When VDC warning lamp is ON	On
		When VDC warning lamp is OFF	Off
BATTERY VOLT	Battery voltage supplied to the ABS actuator and electric unit (control unit)	Ignition switch ON	10 – 16 V
YAW RATE SEN	Yaw rate detected by yaw rate/side G sensor	Vehicle stopped	Approx. 0 d/s
		Turning right	Negative value
		Turning left	Positive value
ACCEL POS SIG	Throttle actuator opening/closing is displayed (linked with accelerator pedal)	Accelerator pedal not depressed (ignition switch is ON)	0 %
		Depress accelerator pedal (ignition switch is ON)	0 - 100 %

Monitor item	Display content	Data monitor	
		Condition	Reference value in normal operation
SIDE G-SENSOR	Transverse G detected by side G sensor	Vehicle stopped	Approx. 0 m/s^2
		Turning right	Negative value
		Turning left	Positive value
STR ANGLE SIG	Steering angle detected by steering angle sensor	Driving straight	±2.5°
		Turn 90° to right	Approx. +90°
		Turn 90° to left	Approx. –90°
PRESS SENSOR	Brake fluid pressure detected by pressure sensor	With ignition switch turned ON and brake pedal released	Approx. 0 bar
		With ignition switch turned ON and brake pedal depressed	–40 to 300 bar
EBD SIGNAL	EBD operation	EBD is active	On
		EBD is inactive	Off
ABS SIGNAL	ABS operation	ABS is active	On
		ABS is inactive	Off
TCS SIGNAL	TCS operation	TCS is active	On
		TCS is inactive	Off
VDC SIGNAL	VDC operation	VDC is active	On
		VDC is inactive	Off
EBD FAIL SIG	EBD fail-safe signal	In EBD fail-safe	On
		EBD is normal	Off
ABS FAIL SIG	ABS fail-safe signal	In ABS fail-safe	On
		ABS is normal	Off
TCS FAIL SIG	TCS fail-safe signal	In TCS fail-safe	On
		TCS is normal	Off
VDC FAIL SIG	VDC fail-safe signal	In VDC fail-safe	On
		VDC is normal	Off
CRANKING SIG	Crank operation	Crank is active	On
		Crank is inactive	Off
FLUID LEV SW	Brake fluid level switch signal status	When brake fluid level switch ON	On
		When brake fluid level switch OFF	Off
PARK BRAKE SW	Parking brake switch signal status	Parking brake switch is active	On
		Parking brake switch is inactive	Off
USV[FL-RR] (Note 2)	VDC switch-over valve	When actuator (switch-over valve) is active (“ACTIVE TEST” with CONSULT)	On
		When actuator (switch-over valve) is not active and actuator relay is active (ignition switch ON)	Off
USV[FR-RL] (Note 2)	VDC switch-over valve	When actuator (switch-over valve) is active (“ACTIVE TEST” with CONSULT)	On
		When actuator (switch-over valve) is not active and actuator relay is active (ignition switch ON)	Off

Monitor item	Display content	Data monitor	
		Condition	Reference value in normal operation
HSV[FL-RR] (Note 2)	VDC switch-over valve	When actuator (switch-over valve) is active (“ACTIVE TEST” with CONSULT)	On
		When actuator (switch-over valve) is not active and actuator relay is active (ignition switch ON)	Off
HSV[FR-RL] (Note 2)	VDC switch-over valve	When actuator (switch-over valve) is active (“ACTIVE TEST” with CONSULT)	On
		When actuator (switch-over valve) is not active and actuator relay is active (ignition switch ON)	Off
V/R OUTPUT (Note 2)	Solenoid valve relay activated	When the solenoid valve relay is active (When ignition switch OFF)	On
		When the solenoid valve relay is not active (in the fail-safe mode)	Off
M/R OUTPUT	Actuator motor and motor relay activated	When the actuator motor and motor relay are active (“ACTIVE TEST” with CONSULT)	On
		When the actuator motor and motor relay are inactive	Off
ENGINE RPM	With engine running	With engine stopped	0 [tr/min (rpm)]
		Engine running	Almost in accordance with tachometer display

NOTE:

- 1: Confirm tire pressure is normal.
- 2: A brief moment of On/Off condition occurs every 20 seconds after ignition switch turned ON. This is not malfunction because it is an operation for checking.
- 3: On and off timing for warning lamp and indicator lamp.

- ABS warning lamp: Refer to BRC-80, "Description".
- Brake warning lamp: Refer to BRC-81, "Description".
- VDC OFF indicator lamp: Refer to BRC-83, "Description".
- VDC warning lamp: Refer to BRC-82, "Description".

Wiring Diagram - BRAKE CONTROL SYSTEM -

INFOID:0000000009361579

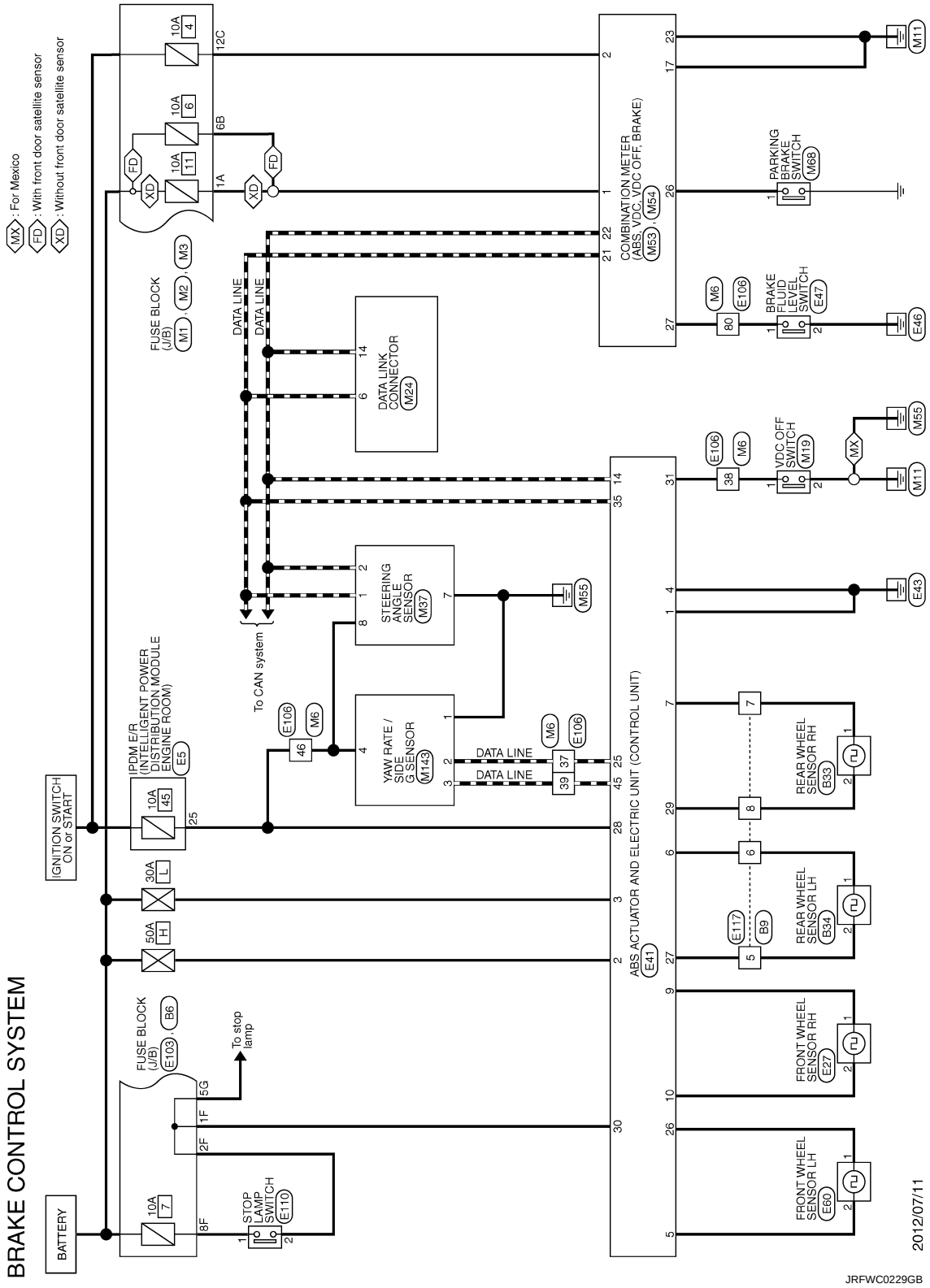

BRAKE CONTROL SYSTEM

Connector No.	B6
Connector Name	FUSE BLOCK (J/B)
Connector Type	NS12FBR-CS

H.S.

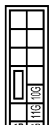

Terminal No.	Color of Wire	Signal Name [Specification]
5G	LG	–
10G	W	– [Coupe models]
10G	P	– [Roadster models]
11G	W	– [Coupe models]
11G	G	– [Roadster models]
12G	Y	–

Connector No.	B9
Connector Name	WIRE TO WIRE
Connector Type	NS10FW-CS

H.S.

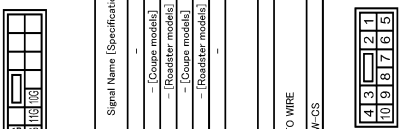

Terminal No.	Color of Wire	Signal Name [Specification]
1	P	–
2	R	– [Coupe models]
2	V	– [Roadster models]
3	Y	–
4	G	–
5	GR	–
6	BG	–
7	BR	–
8	LG	–
9	R	–
10	G	–

Connector No.	B33
Connector Name	REAR WHEEL SENSOR RH
Connector Type	AAZ202FB1

H.S.

Terminal No.	Color of Wire	Signal Name [Specification]
1	BR	–
2	LG	–

Connector No.	B34
Connector Name	REAR WHEEL SENSOR LH
Connector Type	RH02FB

H.S.

Terminal No.	Color of Wire	Signal Name [Specification]
1	BG	–
2	GR	–

Connector No.	E5
Connector Name	IPDM E/R (INTELLIGENT POWER DISTRIBUTION MODULE ENGINE ROOM)
Connector Type	TH20FW-CS12-M4-1V

H.S.

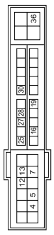

Terminal No.	Color of Wire	Signal Name [Specification]
4	V	–
5	L	–

7	R	– [Coupe models]
7	V	– [Roadster models]
12	B/W	–
13	Y	–
16	LG	–
19	W	–
25	G	–
27	Y	–
28	L	–
30	GR	–
36	G	–

Connector No.	E27
Connector Name	FRONT WHEEL SENSOR RH
Connector Type	AAZ202FB1

H.S.

Terminal No.	Color of Wire	Signal Name [Specification]
1	B	–
2	W	–

Connector No.	E41
Connector Name	ABS ACTUATOR AND ELECTRIC UNIT (CONTROL UNIT)
Connector Type	BAAA42FB-AHZ4-LH

H.S.

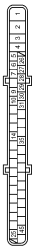

Terminal No.	Color of Wire	Signal Name [Specification]
1	B	GROUND
2	G	UBMR
3	R	UBVR
4	B	GROUND
5	Y	DS FL
6	BG	DP RL
7	BR	DP RR

9	B	DP FR
10	W	DS FR
14	P	CAN-L
25	Y	BUS-L
26	LG	DP FL
27	GR	DS RL
28	G	UZ
29	P	DS RR
30	SB	BLS
31	R	VDC OFF SW
35	L	CAN-H
45	B	BUS-H

Connector No.	E47
Connector Name	BRAKE FLUID LEVEL SWITCH
Connector Type	YV02FGY

H.S.

Terminal No.	Color of Wire	Signal Name [Specification]
1	W	–
2	B	–

Connector No.	E60
Connector Name	FRONT WHEEL SENSOR LH
Connector Type	AAZ202FB1

H.S.

Terminal No.	Color of Wire	Signal Name [Specification]
1	LG	–
2	Y	–

JRFWC0443GB

BRAKE CONTROL SYSTEM

Connector No.	E103
Connector Name	FUSE BLOCK (J/B)
Connector Type	NS16FW-CS

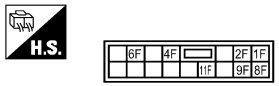

Terminal No.	Color of Wire	Signal Name [Specification]
1F	SB	–
2F	W	–
4F	G	–
6F	BG	–
8F	L	–
9F	R	– [Coupe models]
9F	V	– [Roadster models]
11F	W	–

Connector No.	E106
Connector Name	WIRE TO WIRE
Connector Type	TH80FW-CS16-TM4

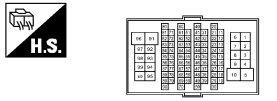

Terminal No.	Color of Wire	Signal Name [Specification]
1	Y	–
3	L	–
4	L	–
7	B	–
8	P	–
9	B	–
11	V	–
12	R	–
13	L	–
14	GR	–
15	P	–
16	W	–
17	SB	–
20	LG	–
21	BR	– [Coupe models]
21	G	– [Roadster models]
31	L	–
32	Y	–
36	V	–
37	Y	–
38	R	–
39	B	–
40	W	–
41	LG	–
42	SB	–
43	G	–
44	GR	– [Except for roadster models with M/T]
44	R	– [Roadster models with M/T]
45	BG	–
46	W	–
47	P	–
58	SHIELD	–
59	L	–
70	P	–
80	W	–
81	P	–
82	G	–
83	V	–
84	L	–
85	BG	–
86	LG	–
87	R	–
89	P	–
91	W	–
92	L	–
93	G	–
94	Y	–
96	Y	–
97	BR	–
98	GR	–
99	LG	–
100	BG	–

Connector No.	E110
Connector Name	STOP LAMP SWITCH
Connector Type	M04FW-LC

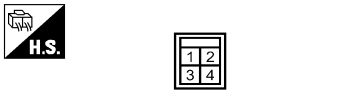

Terminal No.	Color of Wire	Signal Name [Specification]
1	L	–
2	W	–
3	G	–
4	P	–

Connector No.	E117
Connector Name	WIRE TO WIRE
Connector Type	NS10MW-CS

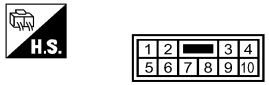

Terminal No.	Color of Wire	Signal Name [Specification]
1	Y	–
2	R	–
3	Y	–
4	G	–
5	GR	–
6	BG	–
7	BR	–
8	P	–
9	R	–
10	R	–

Connector No.	M1
Connector Name	FUSE BLOCK (J/B)
Connector Type	NS06FW-M2

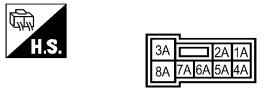

Terminal No.	Color of Wire	Signal Name [Specification]
1A	V	–
2A	G	–
3A	L	–
4A	P	–
5A	L	–
6A	Y	–
7A	BR	–
8A	L	–

Connector No.	M3
Connector Name	FUSE BLOCK (J/B)
Connector Type	NS12FW-CS

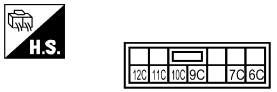

Terminal No.	Color of Wire	Signal Name [Specification]
6C	R	–
7C	B	–
9C	O	–
10C	L	–
11C	LG	–
12C	O	–

JRFWC0444GB

BRAKE CONTROL SYSTEM

Connector No.	M6
Connector Name	WIRE TO WIRE
Connector Type	TH80MW-CS16-TM4

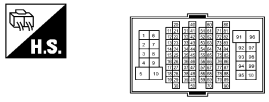

Terminal No.	Color of Wire	Signal Name [Specification]
1	Y	–
3	L	–
4	L	–
7	B	–
8	P	–
9	B	–
11	GR	–
12	R	–
13	L	–
14	G	–
15	P	–
16	W	–
17	BR	–
20	GR	–
21	R	–
31	BR	–
32	V	–
36	SB	–
37	Y	–
38	LG	–
39	SB	–
40	W	–
41	LG	–
42	R	–
43	G	–
44	G	– [With A/T]
44	R	– [With M/T]
45	O	–
46	G	–
47	BR	–
58	SHIELD	–
59	L	–
70	R	–
80	LG	–
81	GR	–
82	V	–
83	V	–
84	L	–
85	BR	–
86	Y	–
87	G	–
89	P	–
91	W	–
92	P	–
93	P	–
94	Y	–
96	P	–
97	GR	–
98	O	–
99	W	–
100	R	–

Connector No.	M19
Connector Name	VDC OFF SWITCH
Connector Type	TK04FW

Terminal No.	Color of Wire	Signal Name [Specification]
1	LG	–
2	B	–
3	R	–
4	W	–

Connector No.	M24
Connector Name	DATA LINK CONNECTOR
Connector Type	BD16FW

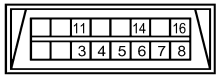

Terminal No.	Color of Wire	Signal Name [Specification]
3	LG	– [Coupe models]
3	Y	– [Roadster models]
4	B	–
5	B	–
6	L	–
7	Y	–
8	G	–
11	Y	– [Coupe models]
11	LG	– [Roadster models]
14	P	–
16	Y	–

Connector No.	M37
Connector Name	STEERING ANGLE SENSOR
Connector Type	TH08FW-NH

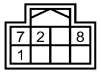

Terminal No.	Color of Wire	Signal Name [Specification]
1	L	CAN-H
2	P	CAN-L
7	B	GROUND
8	G	IGN

Connector No.	M53
Connector Name	COMBINATION METER
Connector Type	TH24FW-NH

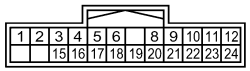

Terminal No.	Color of Wire	Signal Name [Specification]
1	V	BATTERY POWER SUPPLY
2	O	IGNITION SIGNAL
3	L	VEHICLE SPEED SIGNAL (2-PULSE)
4	Y	VEHICLE SPEED SIGNAL (8-PULSE) [Except for Mexico]
4	V	VEHICLE SPEED SIGNAL (8-PULSE) [For Mexico]
5	B	ILLUMINATION CONTROL SIGNAL
6	R	ROOF STATUS SIGNAL
8	Y	POP UP
9	BR	COMMUNICATION SIGNAL (METER->TRIPLE METER)
10	L	COMMUNICATION SIGNAL (TRIPLE METER->METER)
11	Y	AT_SNOW
12	G	S-MODE SWITCH SIGNAL
15	L	ACC POWER SUPPLY
16	R	AIR BAG SIGNAL
17	B	GROUND
18	V	AMBIENT SENSOR SIGNAL
19	G	A/C AUTO AMP. CONNECTION RECOGNITION SIGNAL
20	GR	AMBIENT SENSOR GROUND
21	L	CAN-H
22	P	CAN-L
23	B	GROUND
24	Y	FUEL LEVEL SENSOR GROUND

Connector No.	M54
Connector Name	COMBINATION METER
Connector Type	TH16FW-NH

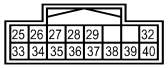

Terminal No.	Color of Wire	Signal Name [Specification]
25	W	ALTERNATOR SIGNAL
26	O	PARKING BRAKE SWITCH SIGNAL
27	LG	BRAKE FLUID LEVEL SWITCH SIGNAL
28	Y	SECURITY SIGNAL
29	GR	WASHER LEVEL SWITCH SIGNAL
32	G	PADDLE SHIFTER DOWN SIGNAL
33	O	PADDLE SHIFTER UP SIGNAL
34	BR	FUEL LEVEL SENSOR SIGNAL
35	L	SEAT BELT BUCKLE SWITCH SIGNAL (DRIVER SIDE)
36	P	PASSENGER SEAT BELT WARNING SIGNAL [Except for Mexico]
36	L	PASSENGER SEAT BELT WARNING SIGNAL [For Mexico]
37	G	NON-MANUAL MODE SIGNAL
38	V	MANUAL MODE SHIFT DOWN SIGNAL
39	L	MANUAL MODE SHIFT UP SIGNAL
40	W	MANUAL MODE SIGNAL

JRFWC0445GB

BRAKE CONTROL SYSTEM

Connector No.	M68
Connector Name	PARKING BRAKE SWITCH
Connector Type	P01FB-A

H.S.

Terminal No.	Color of Wire	Signal Name [Specification]
1	O	–

Connector No.	M143
Connector Name	YAW RATE / SIDE G SENSOR
Connector Type	AAZ04FB-S

H.S.

Terminal No.	Color of Wire	Signal Name [Specification]
1	B	–
2	Y	–
3	SB	–
4	G	–

JRFWC0446GB

Fail-Safe

INFOID:0000000009361580

ABS, EBD SYSTEM

If ABS malfunction electrically, ABS warning lamp and VDC warning lamp will turn on. If EBD malfunction electrically, brake warning lamp, ABS warning lamp and VDC warning lamp will turn on. Simultaneously, the VDC, TCS and ABS become one of the following conditions of the fail-safe function.

- For malfunction of ABS, only the EBD is activated and the condition of vehicle is the same condition of vehicles without TCS and ABS system.
  NOTE:
  ABS self-diagnosis sound may be heard. That is a normal condition because a self-diagnosis for “Ignition switch ON” and “The first starting” are being performed.
- For malfunction of EBD, EBD and ABS become inoperative, and the condition of vehicle is the same as the condition of vehicles without TCS/ABS, EBD system.

VDC, TCS

If VDC, TCS and ABS system malfunction electrically, VDC warning lamp are turned on, and the condition of vehicle is the same as the condition of vehicles without VDC and TCS control.

CAUTION:

If the Fail-Safe function is activated, then perform self-diagnosis for “ABS” with CONSULT.

DTC Inspection Priority Chart

INFOID:0000000009361581

If some DTCs are displayed at the same time, perform inspections one by one based on the following priority chart.

Priority	Detected items (DTC)
1	• U1000 CAN COMM CIRCUIT • U1002 SYSTEM COMM (CAN)
2	• C1110 CONTROLLER FAILURE • C1153 EMERGENCY BRAKE • C1170 VARIANT CORDING
3	• C1130 ENGINE SIGNAL 1 • C1144 ST ANG SEN SIGNAL
4	• C1109 BATTERY VOLTAGE [ABNORMAL] • C1111 PUMP MOTOR • C1140 ACTUATOR RELAY
5	• C1101 RR RH SENSOR-1 • C1102 RR LH SENSOR-1 • C1103 FR RH SENSOR-1 • C1104 FR LH SENSOR-1 • C1105 RR RH SENSOR-2 • C1106 RR LH SENSOR-2 • C1107 FR RH SENSOR-2 • C1108 FR LH SENSOR-2 • C1115 ABS SENSOR [ABNORMAL SIGNAL] • C1116 STOP LAMP SW • C1120 FR LH IN ABS SOL • C1121 FR LH OUT ABS SOL • C1122 FR RH IN ABS SOL • C1123 FR RH OUT ABS SOL • C1124 RR LH IN ABS SOL • C1125 RR LH OUT ABS SOL • C1126 RR RH IN ABS SOL • C1127 RR RH OUT ABS SOL • C1142 PRESS SEN CIRCUIT • C1143 ST ANG SEN CIRCUIT • C1145 YAW RATE SENSOR • C1146 SIDE G-SEN CIRCUIT • C1147 USV LINE [FL-RR] • C1148 USV LINE [FR-RL] • C1149 HSV LINE [FL-RR] • C1150 HSV LINE [FR-RL]
6	• C1155 BR FLUID LEVEL LOW

DTC Index

INFOID:0000000009361582

DTC	Items (CONSULT screen terms)	Reference
C1101	RR RH SENSOR-1	BRC-27, "DTC Logic"
C1102	RR LH SENSOR-1	
C1103	FR RH SENSOR-1	
C1104	FR LH SENSOR-1	
C1105	RR RH SENSOR-2	BRC-30, "DTC Logic"
C1106	RR LH SENSOR-2	
C1107	FR RH SENSOR-2	
C1108	FR LH SENSOR-2	
C1109	BATTERY VOLTAGE [ABNORMAL]	BRC-35, "DTC Logic"
C1110	CONTROLLER FAILURE	BRC-37, "DTC Logic"
C1111	PUMP MOTOR	BRC-38, "DTC Logic"
C1115	ABS SENSOR [ABNORMAL SIGNAL]	BRC-40, "DTC Logic"
C1116	STOP LAMP SW	BRC-45, "DTC Logic"
C1120	FR LH IN ABS SOL	BRC-50, "DTC Logic"
C1121	FR LH OUT ABS SOL	BRC-52, "DTC Logic"
C1122	FR RH IN ABS SOL	BRC-50, "DTC Logic"
C1123	FR RH OUT ABS SOL	BRC-52, "DTC Logic"
C1124	RR LH IN ABS SOL	BRC-50, "DTC Logic"
C1125	RR LH OUT ABS SOL	BRC-52, "DTC Logic"
C1126	RR RH IN ABS SOL	BRC-50, "DTC Logic"
C1127	RR RH OUT ABS SOL	BRC-52, "DTC Logic"
C1130	ENGINE SIGNAL 1	BRC-54, "DTC Logic"
C1140	ACTUATOR RELAY	BRC-56, "DTC Logic"
C1142	PRESS SEN CIRCUIT	BRC-58, "DTC Logic"
C1143	ST ANG SEN CIRCUIT	BRC-60, "DTC Logic"
C1144	ST ANG SEN SIGNAL	BRC-62, "DTC Logic"
C1145	YAW RATE SENSOR	BRC-63, "DTC Logic"
C1146	SIDE G-SEN CIRCUIT	
C1147	USV LINE [FL-RR]	BRC-66, "DTC Logic"
C1148	USV LINE [FR-RL]	
C1149	HSV LINE [FL-RR]	
C1150	HSV LINE [FR-RL]	
C1153	EMERGENCY BRAKE	BRC-37, "DTC Logic"
C1155	BR FLUID LEVEL LOW	BRC-68, "DTC Logic"
C1170	VARIANT CORDING	BRC-37, "DTC Logic"
U1000	CAN COMM CIRCUIT	BRC-71, "DTC Logic"
U1002	SYSTEM COMM (CAN)	BRC-72, "DTC Logic"

SYMPTOM DIAGNOSIS

EXCESSIVE ABS FUNCTION OPERATION FREQUENCY

Diagnosis Procedure

INFOID:0000000009361583

1. CHECK START

Check the front and rear brake force distribution using a brake tester. Refer to BR-64, "General Specifications".

Is the inspection result normal?

YES >> GO TO 2.
NO >> Check the brake system.

2. CHECK FRONT AND REAR AXLE

Make sure that there is no excessive play in the front and rear axles.
- Front: Refer to FAX-6, "Inspection".
- Rear: Refer to RAX-5, "Inspection".

Is the inspection result normal?

YES >> GO TO 3.
NO >> Repair or replace error-detected parts.

3. CHECK WHEEL SENSOR AND SENSOR ROTOR

Check the following.
- Wheel sensor installation for damage.
- Sensor rotor installation for damage.
- Wheel sensor connector connection.
- Wheel sensor harness inspection.

Is the inspection result normal?

YES >> GO TO 4.
NO >> • Replace wheel sensor or sensor rotor.
- Front wheel sensor: Refer to BRC-109, "FRONT WHEEL SENSOR : Exploded View".
- Rear wheel sensor: Refer to BRC-110, "REAR WHEEL SENSOR : Exploded View".
- Front sensor rotor: Refer to BRC-111, "FRONT SENSOR ROTOR : Exploded View".
- Rear sensor rotor: Refer to BRC-111, "REAR SENSOR ROTOR : Exploded View".

4. CHECK ABS WARNING LAMP DISPLAY

Make sure that the ABS warning lamp is turned off after the ignition switch is turned ON or when driving.

Is the ABS warning lamp illuminated?

YES >> Perform self-diagnosis for “ABS” with CONSULT.
NO >> Normal

UNEXPECTED PEDAL REACTION

Diagnosis Procedure

INFOID:0000000009361584

1. CHECK BRAKE PEDAL STROKE

Check the brake pedal stroke. Refer to BR-8, "Inspection and Adjustment".

Is the stroke too large?

YES >> • Bleed air from brake tube and hose. Refer to BR-12, "Bleeding Brake System".
• Check the brake pedal, brake booster, and master cylinder for mount play, looseness, brake system fluid leakage, etc.
- Brake fluid: Refer to BR-11, "Inspection".
- Brake pedal: Refer to BR-8, "Inspection and Adjustment".
- Brake master cylinder: Refer to BR-13, "Inspection".
- Brake booster: Refer to BR-14, "Inspection".
- Front disc brake: Refer to BR-45, "BRAKE CALIPER ASSEMBLY (2 PISTON TYPE) : Inspection" (2 piston type), BR-49, "BRAKE CALIPER ASSEMBLY (4 PISTON TYPE) : Inspection" (4 piston type).
- Rear disc brake: Refer to BR-59, "BRAKE CALIPER ASSEMBLY (1 PISTON TYPE) : Inspection" (1 piston type), BR-63, "BRAKE CALIPER ASSEMBLY (2 PISTON TYPE) : Inspection" (2 piston type).

NO >> GO TO 2.

2. CHECK FUNCTION

Disconnect ABS actuator and electric unit (control unit) harness connector to deactivate ABS. Check if braking force is normal in this condition. Connect harness connector after inspection.

Is the inspection result normal?

YES >> Normal
NO >> Check brake system.

THE BRAKING DISTANCE IS LONG

Diagnosis Procedure

INFOID:0000000009361585

CAUTION:
The stopping distance on slippery road surfaces might be longer when the ABS is operating than when the ABS is not operating.

1. CHECK FUNCTION

1. Turn the ignition switch OFF
2. Disconnect ABS actuator and electric unit (control unit) harness connector to deactivate ABS. In this condition, check the stopping distance. After inspection, connect harness connector.

Is the inspection result normal?

YES >> Normal
NO >> Check brake system.

ABS FUNCTION DOES NOT OPERATE

Diagnosis Procedure

INFOID:0000000009361586

CAUTION:
ABS does not operate when speed is 10 km/h (6 MPH) or lower.

1. CHECK ABS WARNING LAMP DISPLAY

Make sure that the ABS warning lamp turns OFF after ignition switch is turned ON or when driving.

Is the inspection result normal?

YES >> Normal
NO >> Perform self-diagnosis for “ABS” with CONSULT.

PEDAL VIBRATION OR ABS OPERATION SOUND OCCURS

Diagnosis Procedure

INFOID:0000000009361587

CAUTION:
Under the following conditions, ABS is activated and vibration is felt when brake pedal is lightly depressed (just place a foot on it). However, this is normal.
- **When shifting gears**
- **When driving on slippery road**
- **During cornering at high speed**
- **When passing over bumps or grooves [at approximately 50 mm (1.97 in) or more]**
- **When pulling away just after starting engine [at approximately 10 km/h (6 MPH) or higher]**

1. SYMPTOM CHECK 1

Check that there are pedal vibrations when the engine is started.

Do vibrations occur?

YES >> GO TO 2.
NO >> Inspect the brake pedal.

2. SYMPTOM CHECK 2

Check that there are ABS operation noises when the engine is started.

Do the operation noises occur?

YES >> GO TO 3.
NO >> Perform self-diagnosis for “ABS” with CONSULT.

3. SYMPTOM CHECK 3

Check symptoms when electrical component (headlamps, etc.) switches are operated.

Do symptoms occur?

YES >> Check if there is a radio, antenna, antenna lead wire, or wiring close to the control unit. If there is, move it farther away.
NO >> Normal

VEHICLE JERKS DURING VDC/TCS/ABS CONTROL

Diagnosis Procedure

INFOID:0000000009361588

1. SYMPTOM CHECK

Check if the vehicle jerks during VDC/TCS/ABS control.

Is the inspection result normal?

YES >> Normal.
NO >> GO TO 2.

2. CHECK SELF-DIAGNOSIS RESULTS

Perform self-diagnosis for “ABS” with CONSULT.

Are self-diagnosis results indicated?

YES >> Check the corresponding items, make repairs, and perform self-diagnosis for “ABS” with CONSULT.
NO >> GO TO 3.

3. CHECK CONNECTOR

1. Turn the ignition switch OFF.
2. Disconnect ABS actuator and electric unit (control unit) harness connector, and check terminal for deformation, disconnection, looseness, etc.
3. Securely connect harness connectors and perform self-diagnosis for “ABS” with CONSULT.

Are self-diagnosis results indicated?

YES >> If poor contact, damage, open or short circuit of harness connector terminal is found, repair or replace.
NO >> GO TO 4.

4. CHECK ECM AND TCM SELF-DIAGNOSIS RESULTS

Perform self-diagnosis for “ENGINE” and “TRANSMISSION” with CONSULT.

Are self-diagnosis results indicated?

YES >> Check the corresponding items.
NO >> Replace ABS actuator and electric unit (control unit). Refer to BRC-112, "Exploded View".

NORMAL OPERATING CONDITION

Description

INFOID:0000000009361589

Symptom	Result
Slight vibrations are felt on the brake pedal and the operation noises occur, when VDC, TCS or ABS is activated.	This is a normal condition due to the VDC, TCS or ABS activation.
Stopping distance is longer than that of vehicles without ABS when the vehicle drives on rough, gravel, or snow-covered (fresh, deep snow) roads.	
The brake pedal moves and generates noises, when TCS or VDC is activated due to rapid acceleration or sharp turn.	
The brake pedal vibrates and motor operation noises occur from the engine room, after the engine starts and just after the vehicle starts.	This is a normal, and it is caused by the ABS operation check.
Depending on the road conditions, the driver may experience a sluggish feel.	This is normal, because TCS places the highest priority on the optimum traction (stability).
TCS may activate momentarily if wheel speed changes when driving over location where friction coefficient varies, when downshifting, or when fully depressing accelerator pedal.	
The ABS warning lamp and VDC warning lamp may turn ON when the vehicle is subject to strong shaking or large vibration, such as when the vehicle is rotating on a turntable or located on a ship while the engine is running.	In this case, restart the engine on a normal road. If the normal condition is restored, there is no malfunction. At that time, erase the self-diagnosis memory.
VDC may not operate normally or the ABS warning lamp and VDC warning lamp may illuminate, when running on a special road that is extremely slanted (e.g. bank in a circuit course).	
A malfunction may occur in the yaw rate/side G sensor system, when the vehicle turns sharply, such as during a spin turn, axle turn, or drift driving, while the VDC function is off (VDC warning lamp illuminated).	
The vehicle speed will not increase even though the accelerator pedal is depressed, when inspecting the speedometer on a 2-wheel chassis dynamometer.	Normal (Deactivate the VDC/TCS function before performing an inspection on a chassis dynamometer.)
VDC warning lamp may simultaneously turn on when low tire pressure warning lamp turns on.	This is not a VDC system error but results from characteristic change of tire.

PRECAUTION

PRECAUTIONS

FOR USA AND CANADA

FOR USA AND CANADA : Precaution for Supplemental Restraint System (SRS) "AIR BAG" and "SEAT BELT PRE-TENSIONER"

INFOID:0000000009361590

The Supplemental Restraint System such as “AIR BAG” and “SEAT BELT PRE-TENSIONER”, used along with a front seat belt, helps to reduce the risk or severity of injury to the driver and front passenger for certain types of collision. This system includes seat belt switch inputs and dual stage front air bag modules. The SRS system uses the seat belt switches to determine the front air bag deployment, and may only deploy one front air bag, depending on the severity of a collision and whether the front occupants are belted or unbelted.
Information necessary to service the system safely is included in the “SRS AIR BAG” and “SEAT BELT” of this Service Manual.

WARNING:

Always observe the following items for preventing accidental activation.

- **To avoid rendering the SRS inoperative, which could increase the risk of personal injury or death in the event of a collision that would result in air bag inflation, all maintenance must be performed by an authorized NISSAN/INFINITI dealer.**
- **Improper maintenance, including incorrect removal and installation of the SRS, can lead to personal injury caused by unintentional activation of the system. For removal of Spiral Cable and Air Bag Module, see “SRS AIR BAG”.**
- **Never use electrical test equipment on any circuit related to the SRS unless instructed to in this Service Manual. SRS wiring harnesses can be identified by yellow and/or orange harnesses or harness connectors.**

PRECAUTIONS WHEN USING POWER TOOLS (AIR OR ELECTRIC) AND HAMMERS

WARNING:

Always observe the following items for preventing accidental activation.

- **When working near the Air Bag Diagnosis Sensor Unit or other Air Bag System sensors with the ignition ON or engine running, never use air or electric power tools or strike near the sensor(s) with a hammer. Heavy vibration could activate the sensor(s) and deploy the air bag(s), possibly causing serious injury.**
- **When using air or electric power tools or hammers, always switch the ignition OFF, disconnect the battery, and wait at least 3 minutes before performing any service.**

FOR USA AND CANADA : Precaution for Battery Service

INFOID:0000000009361591

Before disconnecting the battery, lower both the driver and passenger windows. This will prevent any interference between the window edge and the vehicle when the door is opened/closed. During normal operation, the window slightly raises and lowers automatically to prevent any window to vehicle interference. The automatic window function will not work with the battery disconnected.

FOR USA AND CANADA : Precaution for Procedure without Cowl Top Cover

INFOID:0000000009361592

When performing the procedure after removing cowl top cover, cover the lower end of windshield with urethane, etc to prevent damage to windshield.

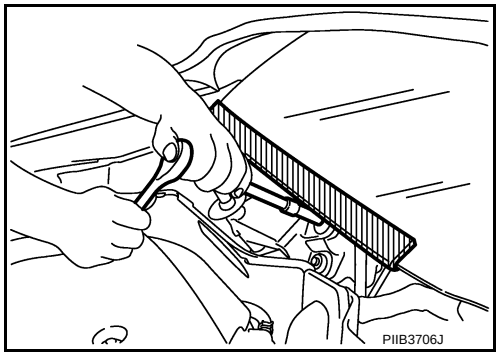

FOR USA AND CANADA : Precaution for Brake System

INFOID:0000000009361593

WARNING:
Since dust covering the front and rear brakes has an affect on human body, the dust must be removed with a dust collector. Never splatter the dust with an air blow gun.

- Brake fluid use refer to MA-16, "FOR NORTH AMERICA : Fluids and Lubricants".
- Never reuse drained brake fluid.
- Never spill or splash brake fluid on painted surfaces. Brake fluid may seriously damage paint. Wipe it off immediately and wash with water if it gets on a painted surface.
- Never use mineral oils such as gasoline or light oil. They may damage rubber parts and cause improper operation.
- Always loosen the brake tube flare nut with a flare nut wrench.
- Tighten the brake tube flare nut to the specified torque with a crow-foot (A) and torque wrench (B).
- Always conform the specified tightening torque when installing the brake pipes.
- Brake system is an important safety part. If a brake fluid leak is detected, always disassemble the affected part. If a malfunction is detected, replace part with a new one.
- Turn the ignition switch OFF and disconnect the ABS actuator and electric unit (control unit) harness connector or the battery negative terminal before performing the work.

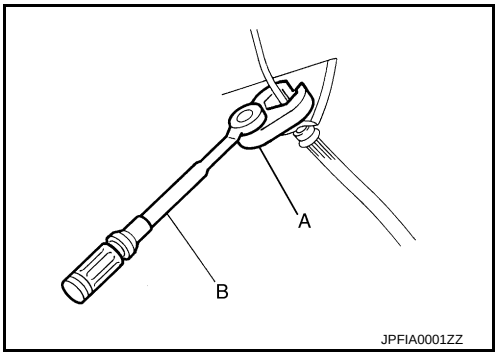

FOR USA AND CANADA : Precaution for Brake Control

INFOID:0000000009361594

- When starting engine or when starting vehicle just after starting engine, brake pedal may vibrate or motor operating noise may be heard from engine compartment. This is normal condition.
- When an error is indicated by ABS or another warning lamp, collect all necessary information from customer (what symptoms are present under what conditions) and check for estimate causes before starting diagnostic servicing. Besides electrical system inspection, check brake booster operation, brake fluid level, and oil leaks.
- If tire size and type are used in an improper combination, or brake pads are not Genuine NISSAN parts, stopping distance or steering stability may deteriorate.
- ABS might be out of order or malfunctions by putting a radio (wiring inclusive), an antenna and a lead-in wire near the control unit.
- VDC system may not operate normally or a VDC OFF indicator lamp or VDC warning lamp may light.
- When replacing the following parts with parts other than genuine parts or making modifications: Suspension related parts (shock absorber, spring, bushing, etc.), tires, wheels (other than specified sizes), brake-related parts (pad, rotor, caliper, etc.), engine-related parts (muffler, ECM, etc.) and body reinforcement-related parts (roll bar, tower bar, etc.).
- When driving with worn or deteriorated suspension, tires and brake-related parts.

FOR USA AND CANADA : Precautions for Harness Repair

INFOID:0000000009361595

COMMUNICATION LINE

- Solder the repaired area and wrap tape around the soldered area.
  NOTE:
  A fray of twisted lines must be within 110 mm (4.33 in).

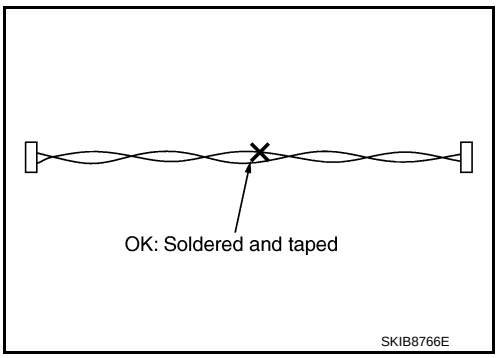

- Bypass connection is never allowed at the repaired area.
  NOTE:
  Bypass connection may cause communication error as spliced wires that are separate from the main line or twisted lines lose noise immunity.
- Replace the applicable harness as an assembly if error is detected on the shield lines of communication line.

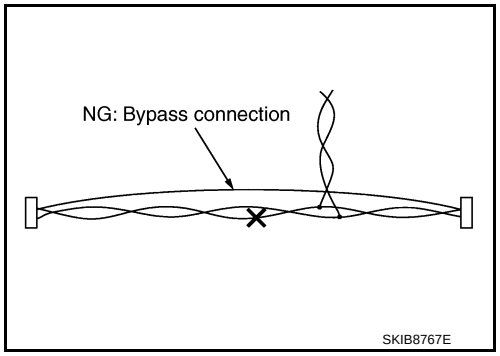

FOR MEXICO

FOR MEXICO : Precaution for Supplemental Restraint System (SRS) "AIR BAG" and "SEAT BELT PRE-TENSIONER"

INFOID:0000000009361596

The Supplemental Restraint System such as “AIR BAG” and “SEAT BELT PRE-TENSIONER”, used along with a front seat belt, helps to reduce the risk or severity of injury to the driver and front passenger for certain types of collision. Information necessary to service the system safely is included in the “SRS AIR BAG” and “SEAT BELT” of this Service Manual.

WARNING:
Always observe the following items for preventing accidental activation.
- **To avoid rendering the SRS inoperative, which could increase the risk of personal injury or death in the event of a collision that would result in air bag inflation, all maintenance must be performed by an authorized NISSAN/INFINITI dealer.**
- **Improper maintenance, including incorrect removal and installation of the SRS, can lead to personal injury caused by unintentional activation of the system. For removal of Spiral Cable and Air Bag Module, see “SRS AIR BAG”.**
- **Never use electrical test equipment on any circuit related to the SRS unless instructed to in this Service Manual. SRS wiring harnesses can be identified by yellow and/or orange harnesses or harness connectors.**

PRECAUTIONS WHEN USING POWER TOOLS (AIR OR ELECTRIC) AND HAMMERS

WARNING:
Always observe the following items for preventing accidental activation.
- **When working near the Air Bag Diagnosis Sensor Unit or other Air Bag System sensors with the ignition ON or engine running, never use air or electric power tools or strike near the sensor(s) with a hammer. Heavy vibration could activate the sensor(s) and deploy the air bag(s), possibly causing serious injury.**
- **When using air or electric power tools or hammers, always switch the ignition OFF, disconnect the battery, and wait at least 3 minutes before performing any service.**

FOR MEXICO : Precaution for Battery Service

INFOID:0000000009361597

Before disconnecting the battery, lower both the driver and passenger windows. This will prevent any interference between the window edge and the vehicle when the door is opened/closed. During normal operation, the window slightly raises and lowers automatically to prevent any window to vehicle interference. The automatic window function will not work with the battery disconnected.

FOR MEXICO : Precaution for Procedure without Cowl Top Cover

INFOID:0000000009361598

When performing the procedure after removing cowl top cover, cover the lower end of windshield with urethane, etc to prevent damage to windshield.

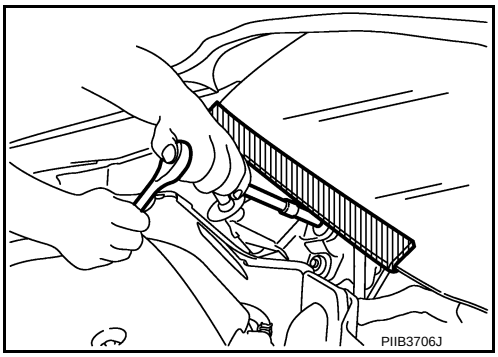

FOR MEXICO : Precaution for Brake System

INFOID:0000000009361599

WARNING:
Since dust covering the front and rear brakes has an affect on human body, the dust must be removed with a dust collector. Never splatter the dust with an air blow gun.

- Brake fluid use refer to MA-17, "FOR MEXICO : Fluids and Lubricants".
- Never reuse drained brake fluid.
- Never spill or splash brake fluid on painted surfaces. Brake fluid may seriously damage paint. Wipe it off immediately and wash with water if it gets on a painted surface.
- Never use mineral oils such as gasoline or light oil. They may damage rubber parts and cause improper operation.
- Always loosen the brake tube flare nut with a flare nut wrench.
- Tighten the brake tube flare nut to the specified torque with a crow-foot (A) and torque wrench (B).
- Always conform the specified tightening torque when installing the brake pipes.
- Brake system is an important safety part. If a brake fluid leak is detected, always disassemble the affected part. If a malfunction is detected, replace part with a new one.
- Turn the ignition switch OFF and disconnect the ABS actuator and electric unit (control unit) harness connector or the battery negative terminal before performing the work.

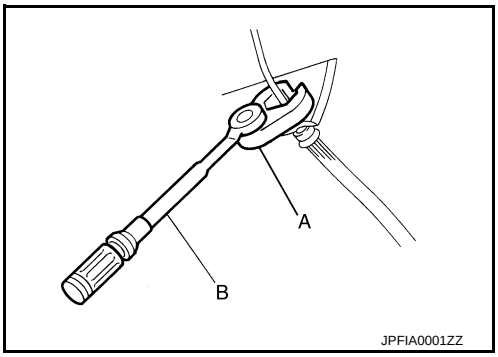

FOR MEXICO : Precaution for Brake Control

INFOID:0000000009361600

- When starting engine or when starting vehicle just after starting engine, brake pedal may vibrate or motor operating noise may be heard from engine compartment. This is normal condition.
- When an error is indicated by ABS or another warning lamp, collect all necessary information from customer (what symptoms are present under what conditions) and check for estimate causes before starting diagnostic servicing. Besides electrical system inspection, check brake booster operation, brake fluid level, and oil leaks.
- If tire size and type are used in an improper combination, or brake pads are not Genuine NISSAN parts, stopping distance or steering stability may deteriorate.
- ABS might be out of order or malfunctions by putting a radio (wiring inclusive), an antenna and a lead-in wire near the control unit.
- VDC system may not operate normally or a VDC OFF indicator lamp or VDC warning lamp may light.
- When replacing the following parts with parts other than genuine parts or making modifications: Suspension related parts (shock absorber, spring, bushing, etc.), tires, wheels (other than specified sizes), brake-related parts (pad, rotor, caliper, etc.), engine-related parts (muffler, ECM, etc.) and body reinforcement-related parts (roll bar, tower bar, etc.).
- When driving with worn or deteriorated suspension, tires and brake-related parts.

FOR MEXICO : Precautions for Harness Repair

INFOID:0000000009361601

COMMUNICATION LINE

- Solder the repaired area and wrap tape around the soldered area.
  NOTE:
  A fray of twisted lines must be within 110 mm (4.33 in).

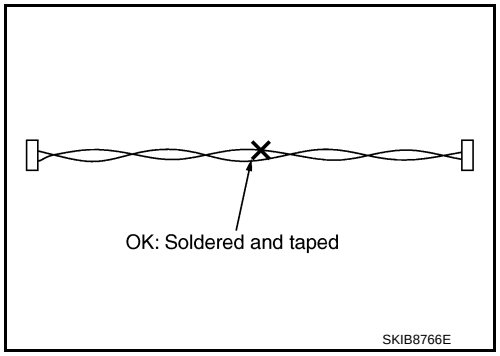

- Bypass connection is never allowed at the repaired area.
  NOTE:
  Bypass connection may cause communication error as spliced wires that are separate from the main line or twisted lines lose noise immunity.
- Replace the applicable harness as an assembly if error is detected on the shield lines of communication line.

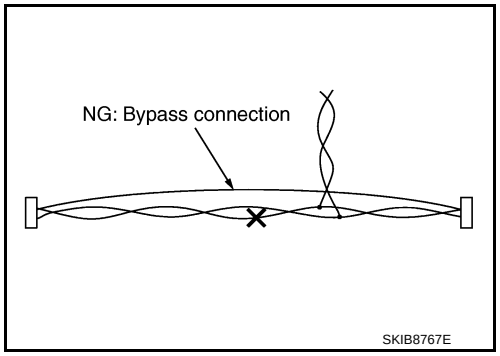

PREPARATION

PREPARATION

Special Service Tool

INFOID:0000000009361602

The actual shapes of Kent-Moore tools may differ from those of special service tools illustrated here.

Tool number (Kent-Moore No.) Tool name		Description
ST30720000 (J-25405) Drift a: 77 mm (3.03 in) dia. b: 55.5 mm (2.185 in) dia.	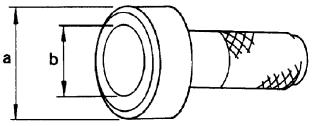 ZZA0701D	Installing rear sensor rotor
ST27863000 (—) Drift a: 74.5 mm (2.933 in) dia. b: 62.5 mm (2.461 in) dia.	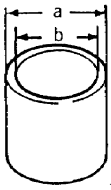 ZZA0832D	
KV40104710 (—) a: 76.3 mm (3.004 in) dia. b: 67.9 mm (2.673 in) dia.	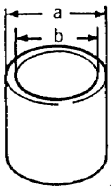 ZZA0832D	

REMOVAL AND INSTALLATION

WHEEL SENSOR

FRONT WHEEL SENSOR

FRONT WHEEL SENSOR : Exploded View

INFOID:0000000009361603

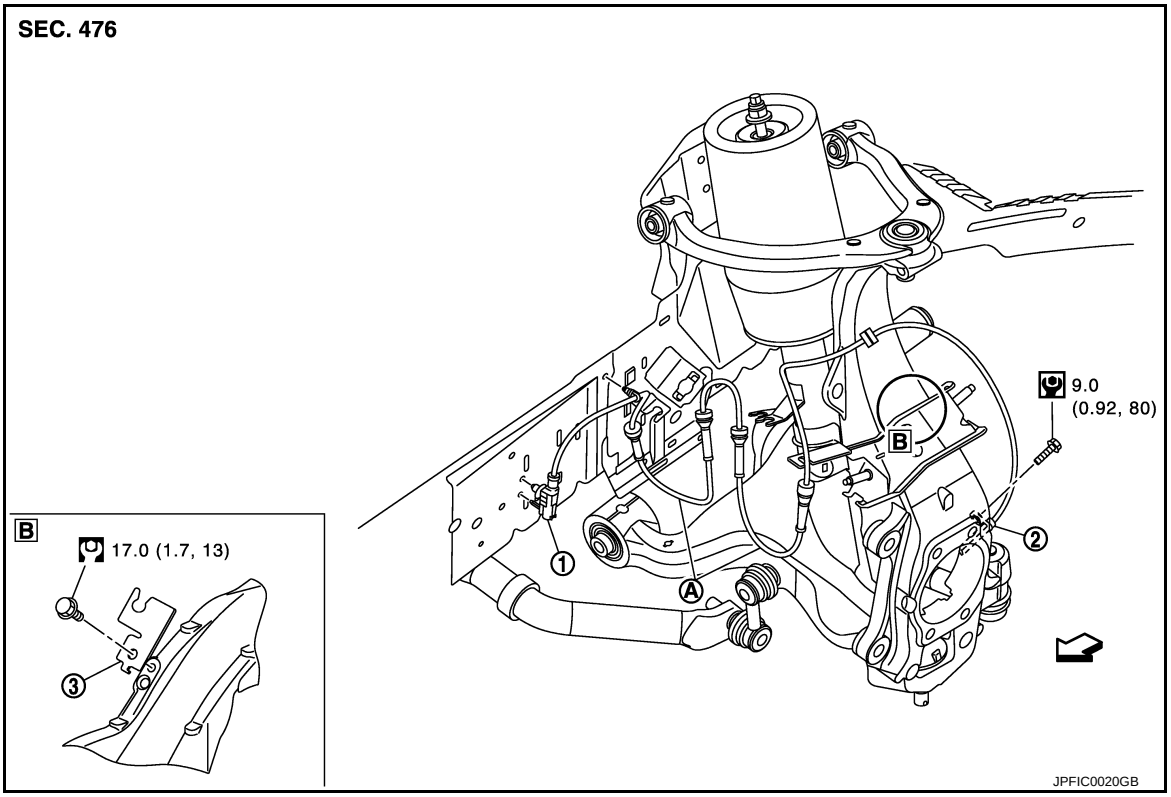

1. Front LH wheel sensor harness connector
2. Front LH wheel sensor
3. Bracket

A. Color line

⇦: Vehicle front

Refer to GI-4, "Components" for symbols in the figure.

NOTE:
The above figure (front side) shows left side. Right side is the mirror image.

FRONT WHEEL SENSOR : Removal and Installation

INFOID:0000000009361604

REMOVAL

Note the following, and when removing wheel sensor.

- Never twist sensor harness as much as possible, when removing it. Pull wheel sensors out without pulling sensor harness.
- Be careful to avoid damaging sensor edges or rotor teeth. Remove wheel sensor first before removing front wheel hub and bearing assembly. This is to avoid damage to wheel sensor wiring and loss of wheel sensor function.

INSTALLATION

Note the following, and when installing wheel sensor. Tighten installation bolts to the specified torques.

- When installing, make sure there is no foreign material such as iron chips on and in the mounting hole of the wheel sensor. Make sure no foreign material has been caught in the sensor rotor. Remove any foreign material and clean the mount.

- When installing wheel sensor, be sure to press rubber grommets in until they lock at locations shown above in the figure. When installed, harness must not be twisted.
- When you see the harness of the wheel sensor from the front side of the vehicle ensure that the color lines (A) are not twisted.

REAR WHEEL SENSOR

REAR WHEEL SENSOR : Exploded View

INFOID:0000000009361605

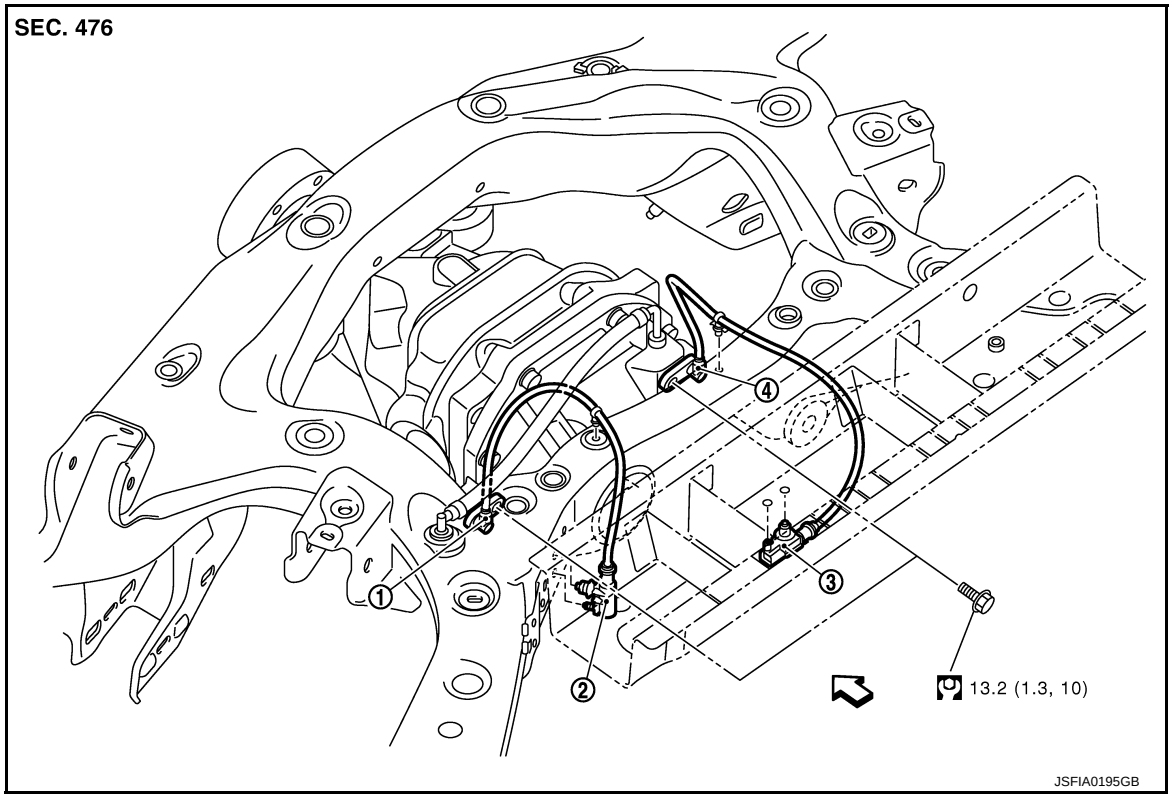

1. Rear LH wheel sensor
2. Rear LH wheel sensor harness connector
3. Rear RH wheel sensor harness connector
4. Rear RH wheel sensor

⇦: Vehicle front

Refer to GI-4, "Components" for symbols in the figure.

REAR WHEEL SENSOR : Removal and Installation

INFOID:0000000009361606

REMOVAL

Note the following, when removing sensor harness.

- Never twist sensor harness as much as possible, when removing it. Pull wheel sensors out without pulling sensor harness.
- Be careful to avoid damaging sensor edges or rotor teeth. Remove wheel sensor first before removing side flange. This is to avoid damage to sensor wiring and loss of sensor function.

INSTALLATION

Note the following, when installing wheel sensor. Tighten installation bolts to the specified torques.

- When installing, make sure there is no foreign material such as iron chips on and in the mounting hole of the wheel sensor. Make sure no foreign material has been caught in the sensor rotor. Remove any foreign material and clean the mount.
- When installing wheel sensor, be sure to press rubber grommets in until they lock at locations shown above in the figure. When installed, harness must not be twisted.

SENSOR ROTOR

FRONT SENSOR ROTOR

FRONT SENSOR ROTOR : Exploded View

INFOID:0000000009361607

Refer to FAX-7, "Exploded View".

FRONT SENSOR ROTOR : Removal and Installation

INFOID:0000000009361608

REMOVAL

Sensor rotor cannot be disassembled. Remove the sensor rotor together with hub bearing assembly. Refer to FAX-7, "Exploded View".

INSTALLATION

Sensor rotor cannot be disassembled. Remove the sensor rotor together with hub bearing assembly. Refer to FAX-7, "Exploded View".

REAR SENSOR ROTOR

REAR SENSOR ROTOR : Exploded View

INFOID:0000000009361609

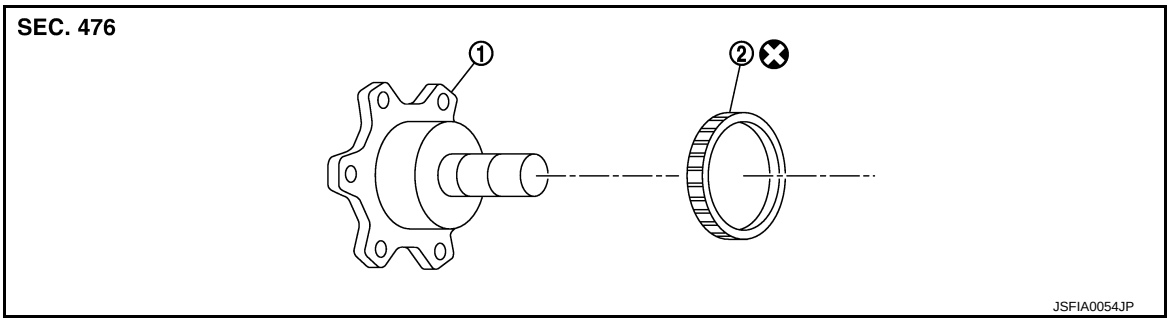

1. Side flange
2. Rear wheel sensor rotor

Refer to GI-4, "Components" for symbols in the figure.

REAR SENSOR ROTOR : Removal and Installation

INFOID:0000000009361610

REMOVAL

- Follow the procedure below to remove rear sensor rotor.
- Remove side flange. Refer to DLN-24, "Exploded View" (R200), DLN-63, "Exploded View" (R200V).
- Using a bearing replacer (suitable tool) and puller (suitable tool), remove sensor rotor from side flange.

INSTALLATION

CAUTION:

Never reuse sensor rotor.

- Follow the procedure below to install rear sensor rotor.
- Using a drifts, press rear sensor rotor onto side flange.

A : Drift [SST: ST30720000 (J-25405)]
B : Drift [SST: ST27863000 (—)
C : Drift [SST: KV40104710 (—)

- Install side flange. Refer to DLN-24, "Exploded View" (R200), DLN-63, "Removal and Installation" (R200V).

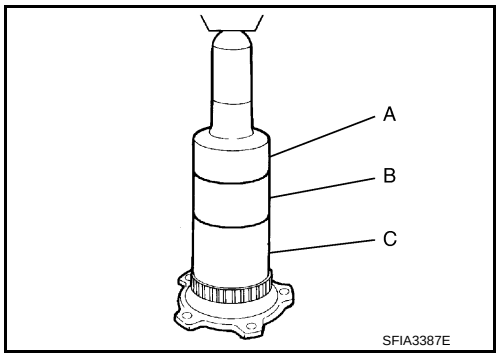

ABS ACTUATOR AND ELECTRIC UNIT (CONTROL UNIT)

Exploded View

INFOID:0000000009361611

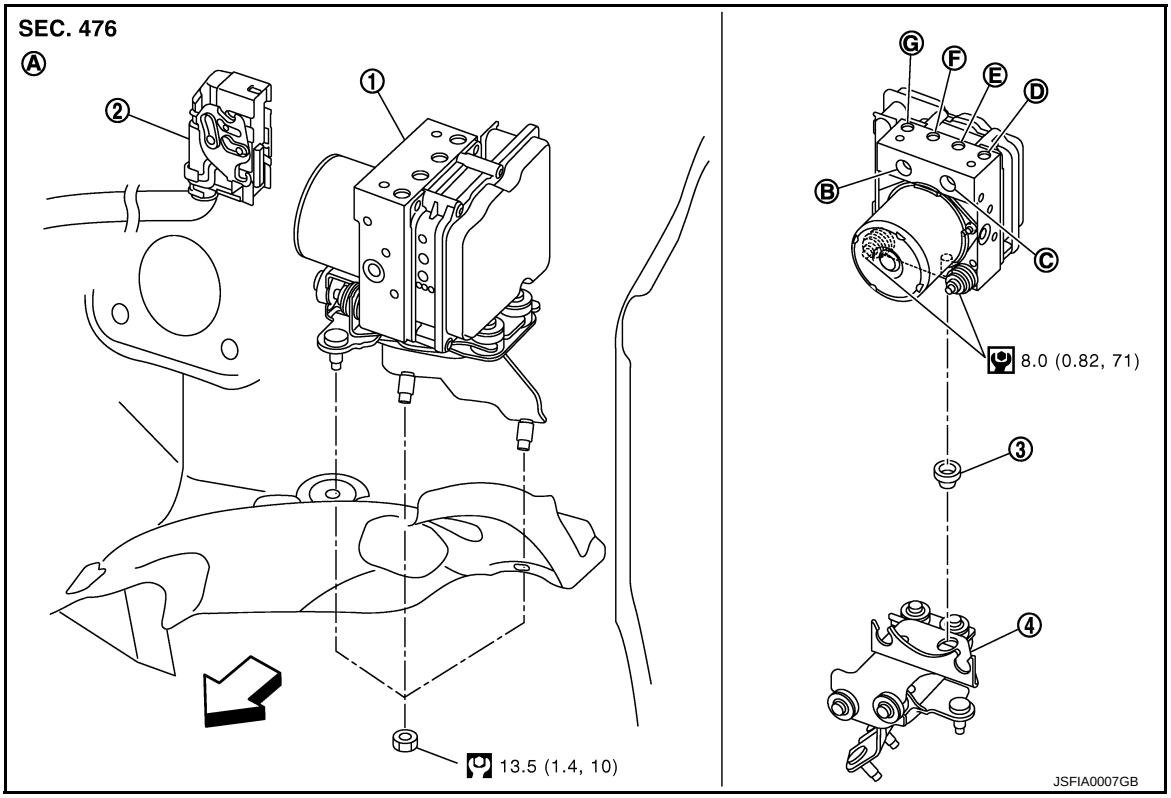

1.	ABS actuator and electric unit (control unit)	2.	Harness connector	3.	Bushing
4.	Bracket				

A.	Left side of dash panel	B.	From master cylinder secondary side	C.	From master cylinder primary side
D.	To front LH brake caliper	E.	To rear RH brake caliper	F.	To Rear LH brake caliper
G.	To front RH brake caliper				

⇦: Vehicle front

Refer to GI-4, "Components" for symbols in the figure.

Removal and Installation

INFOID:0000000009361612

REMOVAL

1. Disconnect the battery cable from negative terminal.
2. Remove cowl top cover. Refer to EXT-22, "Exploded View".
3. Drain brake fluid. Refer to BR-11, "Draining".
4. Disconnect ABS actuator and electric unit (control unit) harness connector.
5. Remove brake booster pressure sensor mounting bracket. Hang brake booster pressure sensor mounting bracket not to interfere with work.
6. Loosen brake tube flare nuts, then remove brake tubes from ABS actuator and electric unit (control unit). Refer to BR-21, "FRONT : Exploded View".
7. Remove brake tube form between ABS actuator and electric unit (control unit) and master cylinder assembly. Refer to BR-21, "FRONT : Exploded View".
8. Remove tire (front LH side).
9. Remove fender protector (rear): (front LH side). Refer to EXT-25, "FENDER PROTECTOR : Exploded View".

10. Remove ABS actuator and electric unit (control unit) bracket mounting nut.
11. Remove ABS actuator and electric unit (control unit) from vehicle.
    CAUTION:
    - **Never apply excessive impact to ABS actuator and electric unit (control unit), such as dropping it.**
    - **Never remove actuator by holding harness.**

INSTALLATION

Note the following, and install in the reverse order of removal.

- Install, use flare nut crowfoot and torque wrench. Refer to BR-21, "FRONT : Exploded View".
- Never apply excessive impact to ABS actuator and electric unit (control unit), such as dropping it.
- Never install actuator by holding harness.
- After work is completed, bleed air from brake tube. Refer to BR-12, "Bleeding Brake System".
- After installing harness connector in the ABS actuator and electric unit (control unit), make sure harness connector is securely locked.
- When replacing ABS actuator and electric unit (control unit), make sure to adjust neutral position of steering angle sensor. Refer to BRC-8, "ADJUSTMENT OF STEERING ANGLE SENSOR NEUTRAL POSITION : Description".

YAW RATE/SIDE G SENSOR

Exploded View

INFOID:0000000009361613

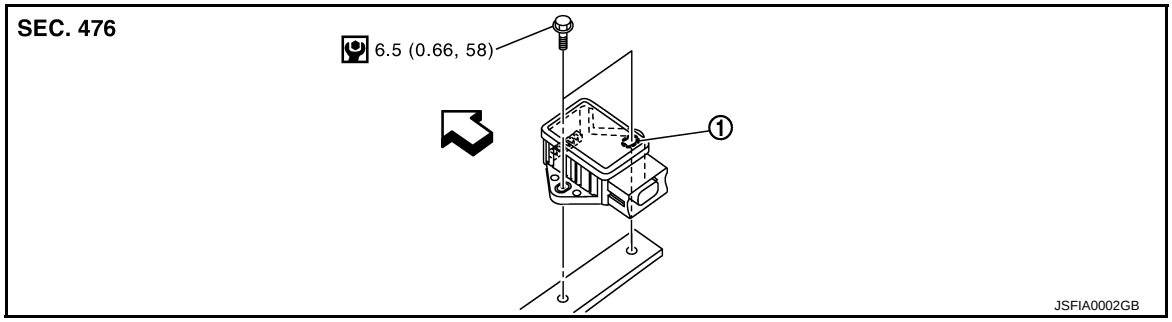

1. Yaw rate/side G sensor

⇦: Vehicle front

Refer to GI-4, "Components" for symbols in the figure.

Removal and Installation

INFOID:0000000009361614

REMOVAL

CAUTION:

- **Never drop or strike yaw rate/side G sensor, or never use power tool etc., because yaw rate/side G sensor is sensitive to the impact.**

1. Remove center console. Refer to IP-25, "Exploded View".
2. Disconnect yaw rate/side G sensor harness connector.
3. Remove mounting bolts. Remove yaw rate/side G sensor.

INSTALLATION

Note the following, and install in the reverse order of removal.

- Never drop or strike yaw rate/side G sensor, or never use power tool etc., because yaw rate/side G sensor is sensitive to the impact.

STEERING ANGLE SENSOR

Exploded View

INFOID:0000000009361615

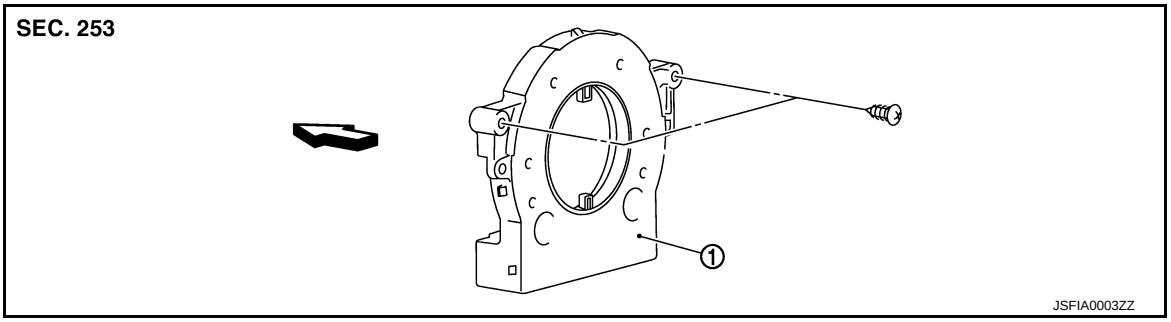

1. Steering angle sensor

⇦: Vehicle front

Removal and Installation

INFOID:0000000009361616

REMOVAL

1. Remove spiral cable assembly. Refer to SR-16, "Exploded View".
2. Remove steering angle sensor from spiral cable assembly.

INSTALLATION

Note the following, and install in the reverse order of removal.

- After work, make sure to adjust neutral position of steering angle sensor. Refer to BRC-8, "ADJUSTMENT OF STEERING ANGLE SENSOR NEUTRAL POSITION : Description".

VDC OFF SWITCH

Removal and Installation

INFOID:0000000009361617

REMOVAL

1. Remove Instrument lower panel LH. Refer to IP-13, "Exploded View".
2. Remove VDC OFF switch.

INSTALLATION

Install in the reverse order of removal.