Chevrolet Avalanche 2003 – 2004 fuse box diagram

Instrument Panel Fuse Block

The fuse block access door is on the driver's side edge of the instrument panel.

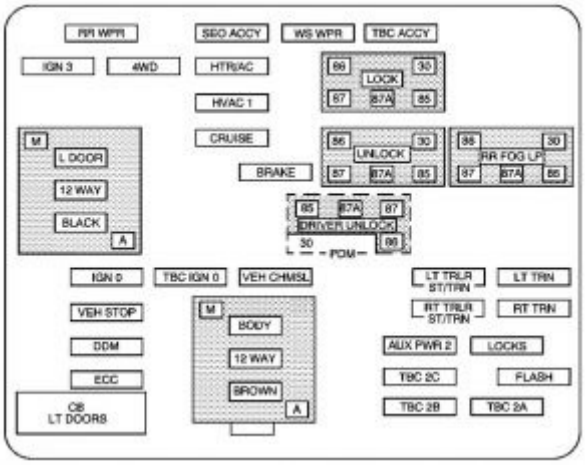

Chevrolet Avalanche – fuse box diagram – instrument panel

Name	Usage
RR Wiper	Rear Window Wiper Switch
SEO ACCY	Special Equipment Option Accessory
WS WPR	Windshield Wipers
TBC ACCY	Truck Body Controller Accessory
IGN 3	Ignition, Heated Seats
4WD	Four-Wheel Drive System
HTR A/C	Climate Control System
LOCK	Power Door Lock Relay (Lock Function)
HVAC 1	Inside Rearview Mirror, Climate Control System
L DOOR	Driver's Door Harness Connection
CRUISE	Cruise Control
UNLOCK	Power Door Lock Relay (Unlock Function)
RR FOG LP	Rear Fog Lamp (Export Only)
BRAKE	Anti-Lock Brake System
DRIVER UNLOCK	Power Door Lock Relay (Driver's Door Unlock Function)
IGN 0	PCM, TCM
TBC IGN 0	Truck Body Controller
VEH CHMSL	Vehicle and Trailer High Mounted Stoplamp
LT TRLR ST/TRN	Left Turn Signal/Stop Trailer
LT TRN	Left Turn Signals and Sidemarkers
VEH STOP	Vehicle Stoplamps, Brake Module, Electronic Throttle Control Module
Body	Harness Connector

RT TRLR ST/TRN	Right Turn Signal/Stop Trailer
RT TRN	Right Turn Signals and Sidemarkers
DDM	Driver Door Module
AUX PWR 2	Rear Cargo Area Power Outlets
LOCKS	Power Door Lock System
ECC	Rear Electronic Climate Control, Liftgate
TBC 2C	Truck Body Controller
FLASH	Flasher Module
CB LT DOORS	Left Power Window Circuit Breaker
TBC 2B	Truck Body Controller
TBC 2A	Truck Body Controller

Center instrument panel utility block

The center instrument panel utility block is located underneath the instrument panel, to the left of the steering column.

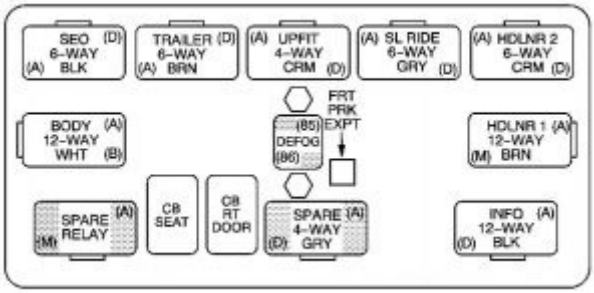

Chevrolet Avalanche – fuse box diagram – center instrument panel

Relay name	Usage
SEO	Special Equipment Option
TRAILER	Trailer Brake Wiring
UPFIT	Upfitter (Not Used)
SL RIDE	Ride Control Harness Connection
HDLR 2	Headliner Wiring Connector
BODY	Body Wiring Connector
DEFOG	Rear Defogger Relay
HDLNR 1	Headliner Wiring Connector 1
SPARE RELAY	Not Used
CB SEAT	Driver and Passenger Seat Module Circuit Breaker
CB RT DOOR	Right Power Window Circuit Breaker
SPARE	Not Used
INFO	Infotainment Harness Connection

Underhood fuse block

The underhood fuse block is located near the battery on the driver's side of the vehicle.

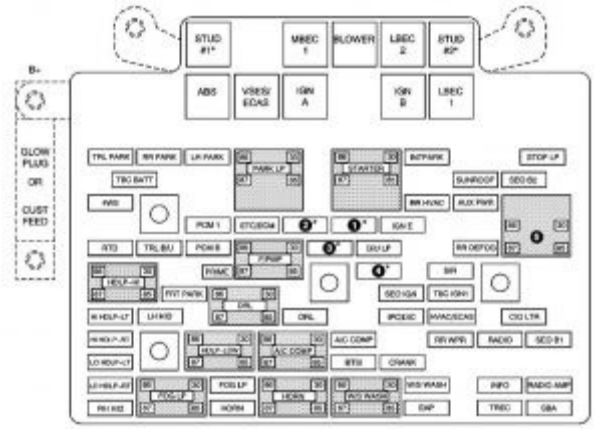

Chevrolet Avalanche – fuse box diagram – engine compartment

*1 — Gasoline Engine and Fuel Injection Rail #2.
*2 — Gasoline Engine and Fuel Injection Rail #1.
*3 — Gasoline Engine; Oxygen Sensors.
*4 — Gasoline Engine; Oxygen Sensors.
*5 — PCM Ignition

Fuse	Usage
GLOW PLUG	Not Used
CUST FEED	Accessory Power
STUD #1	Auxiliary Power
MBEC	Mid Bussed Electrical Center Power Feed, Front Seats, Right Doors
BLOWER	Front Climate Control Fan
LBEC	Left Bussed Electrical Center, Door Modules, Door Locks, Auxiliary Power Outlet—Rear Cargo Area and Instrument Panel
STUD 2	Accessory Power/Trailer Wiring Brake Feed
ABS	Anti-Lock Brakes
VSES/ECAS	Vehicle Stability
IGN A	Ignition Power
IGN B	Ignition Power
LBEC 1	Left Bussed Electrical Center, Left Doors, Truck Body Controller, Flasher Module
TRL PARK	Parking Lamps Trailer Wiring
RR PARK	Right Rear Parking and Sidemarker Lamps
LR PARK	Left Rear Parking and Sidemarker Lamps
PARK LP	Parking Lamps Relay
STARTER	Starter Relay
INTPARK	Interior Lamps
STOP LP	Stoplamps

TBC BATT	Truck Body Controller Battery Feed
SUNROOF	Sunroof
SEO B2	Off-Road Lamps
4WS	Vent Solenoid Canister/Quadrasteer Module Power
RR HVAC	Rear Climate Control
AUX PWR	Auxiliary Power Outlet — Console
IGN 1	Ignition Relay
PCM 1	Powertrain Control Module
ETC/ECM	Electronic Throttle Control, Electronic Brake Controlle
INJ 1	Ignition Coil, Fuel Injectors–Bank 1
INJ 2	Ignition Coil, Fuel Injectors–Bank 2
IGN E	Conditioning Relay, Turn Signal/Hazard Switch, Starter Relay
RTD	Ride Control
TRL B/U	Backup Lamps Trailer Wiring
PCM B	Powertrain Control Module, Fuel Pump
F/PMP	Fuel Pump (Relay)
O2A	Oxygen Sensors
B/U LP	Back-up Lamps, Automatic Transmission Shift Lock Control System
RR DEFOG	Rear Window Defogger
HDLP-HI	Headlamp High Beam Relay
PRIME	Not Used
O2B	Oxygen Sensors
SIR	Supplemental Inflatable Restraint System
FRT PARK	Front Parking Lamps, Sidemarker Lamps
DRL	Daytime Running Lamps (Relay)
SEO IGN	Rear Defog Relay
TBC IGN1	Truck Body Controller Ignition
HI HDLP-LT	High Beam Headlamp-Left
LH HID	Left Hand High Intensity Discharge Lamps
DRL	Daytime Running Lamps
IPC/DIC	Instrument Panel Cluster/Driver Information Center
HVAC/ECAS	Climate Control Controlle
CIG LTR	Cigarette Lighter
HI HDLP-RT	High Beam Headlamp-Right
HDLP-LOW	Headlamp Low Beam Relay
A/C COMP	Air Conditioning Compressor Relay
A/C COMP	Air Conditioning Compressor
RR WPR	Rear Wiper/Washe
RADIO	Audio System

SEO B1	Mid Bussed Electrical Center, HomeLink, Rear Heated Seats
LO HDLP-LT	Headlamp Low Beam-Left
BTSI	Brake Transmission Shift Interlock System
CRANK	Starting System
LO HDLP-RT	Headlamp Low Beam-Right
FOG LP	Fog Lamp Relay
FOG LP	Fog Lamps
HORN	Horn Relay
W/S WASH	Windshield and Rear Window Washer Pump Relay
W/S WASH	Windshield and Rear Window Washer Pump
INFO	OnStar/Rear Seat Entertainment
RADIO AMP	Radio Amplifier
RH HID	Right Hand High Intensity Discharge Lamp
HORN	Horn Fuse
EAP	Electric Adjustable Pedals
TREC	All-Wheel Drive Module
SBA	Supplemental Brake Assist