HYUNDAI

OWNER'S MANUAL

Operation
Maintenance
Specifications

All information in this Owner's Manual is current at the time of publication. However, Hyundai reserves the right to make changes at any time so that our policy of continual product improvement may be carried out.

This manual applies to all models of this vehicle and includes descriptions and explanations of optional as well as standard equipment. As a result, you may find material in this manual that does not apply to your specific vehicle.

CAUTION: MODIFICATIONS TO YOUR HYUNDAI

Your Hyundai should not be modified in any way. Such modifications may adversely affect the performance, safety or durability of your Hyundai and may, in addition, violate conditions of the limited warranties covering the vehicle. Certain modifications may also be in violation of regulations established by the Department of Transportation and other government agencies in your country.

TWO-WAY RADIO OR CELLULAR TELEPHONE INSTALLATION

Your vehicle is equipped with electronic fuel injection and other electronic components. It is possible for an improperly installed/adjusted two-way radio or cellular telephone to adversely affect electronic systems. For this reason, we recommend that you carefully follow the radio manufacturer's instructions or consult your Hyundai dealer for precautionary measures or special instructions if you choose to install one of these devices.

SAFETY AND VEHICLE DAMAGE WARNING

This manual includes information titled as WARNING, CAUTION and NOTICE.
These titles indicate the following:

⚠ WARNING
This indicates that a condition may result in harm, serious injury or death to you or other persons if the warning is not heeded. Follow the advice provided with the warning.

⚠ CAUTION
This indicates that a condition may result in damage to your vehicle or its equipment if the caution is not heeded. Follow the advice provided with the caution.

✻ NOTICE
This indicates that interesting or helpful information is being provided.

FOREWORD

Thank you for choosing Hyundai. We are pleased to welcome you to the growing number of discriminating people who drive Hyundais. The advanced engineering and high-quality construction of each Hyundai we build is something of which we're very proud.

Your Owner's Manual will introduce you to the features and operation of your new Hyundai. It is suggested that you read it carefully because the information it contains can contribute greatly to the satisfaction you receive from your new car.

The manufacturer also recommends that all service and maintenance on your car be performed by an authorized Hyundai dealer. Hyundai dealers are prepared to provide high-quality service, maintenance and any other assistance that may be required.

HYUNDAI MOTOR COMPANY

Note : Because future owners will also need the information included in this manual, if you sell this Hyundai, please leave the manual in the vehicle for their use. Thank you.

⚠ CAUTION

Severe engine and transmission damage may result from the use of poor quality fuels and lubricants that do not meet Hyundai specifications. You must always use high quality fuels and lubricants that meet the specifications listed on Page 8-5 in the Vehicle Specifications section of the Owner's Manual.

Copyright 2014 Hyundai Motor Company. All rights reserved. No part of this publication may be reproduced, stored in any retrieval system or transmitted in any form or by any means without the prior written permission of Hyundai Motor Company.

TABLE OF CONTENTS

Introduction	1
Your vehicle at a glance	2
Safety features of your vehicle	3
Features of your vehicle	4
Driving your vehicle	5
What to do in an emergency	6
Maintenance	7
Specifications & Consumer information	8
Index	I

Introduction

1

How to use this manual / 1-2
Fuel requirements / 1-3
Vehicle break-in process / 1-5
Indicator symbols on the instrument cluster / 1-6

HOW TO USE THIS MANUAL

We want to help you get the greatest possible driving pleasure from your vehicle. Your Owner's Manual can assist you in many ways. We strongly recommend that you read the entire manual. In order to minimize the chance of death or injury, you must read the WARNING and CAUTION sections in the manual.

Illustrations complement the words in this manual to best explain how to enjoy your vehicle. By reading your manual, you learn about features, important safety information, and driving tips under various road conditions.

The general layout of the manual is provided in the Table of Contents. Use the index when looking for a specific area or subject; it has an alphabetical listing of all information in your manual.

Sections: This manual has eight sections plus an index. Each section begins with a brief list of contents so you can tell at a glance if that section has the information you want.

You will find various WARNINGs, CAUTIONs, and NOTICEs in this manual. These WARNINGs were prepared to enhance your personal safety. You should carefully read and follow ALL procedures and recommendations provided in these WARNINGs, CAUTIONs and NOTICEs.

⚠ WARNING

A WARNING indicates a situation in which harm, serious bodily injury or death could result if the warning is ignored.

⚠ CAUTION

A CAUTION indicates a situation in which damage to your vehicle could result if the caution is ignored.

✻ NOTICE

A NOTICE indicates interesting or helpful information is being provided.

FUEL REQUIREMENTS

Gasoline engine

Unleaded

For Europe

For the optimal vehicle performance, we recommend you to use unleaded gasoline which complies with EN 228 and has an octane rating of RON (Research Octane Number) 95 / AKI (Anti Knock Index) 91 or higher.

You may use unleaded gasoline with an octane rating of RON 91~94/AKI 87~90 but it may result in slight performance reduction of the vehicle.

Except Europe

Your new HYUNDAI vehicle is designed to use only unleaded fuel having an Octane Rating of RON (Research Octane Number) 91 / AKI (Anti-Knock Index) 87 or higher.

Your new vehicle is designed to obtain maximum performance with UNLEADED FUEL, as well as minimize exhaust emissions and spark plug fouling.

⚠ CAUTION

NEVER USE LEADED FUEL. The use of leaded fuel is detrimental to the catalytic converter and will damage the engine control system's oxygen sensor and affect emission control.

Never add any fuel system cleaning agents to the fuel tank other than what has been specified. (Consult an authorized HYUNDAI dealer for details.)

⚠ WARNING

- **Do not "top off" after the nozzle automatically shuts off when refueling.**
- **Always check that the fuel cap is installed securely to prevent fuel spillage in the event of an accident.**

Leaded (if equipped)

For some countries, your vehicle is designed to use leaded gasoline. When you are going to use leaded gasoline, ask an authorized HYUNDAI dealer whether leaded gasoline in your vehicle is available or not.

Octane rating of leaded gasoline is same with unleaded one.

Gasoline containing alcohol and methanol

Gasohol, a mixture of gasoline and ethanol (also known as grain alcohol), and gasoline or gasohol containing methanol (also known as wood alcohol) are being marketed along with or instead of leaded gasoline.

Do not use gasohol containing more than 10% ethanol, and do not use gasoline or gasohol containing any methanol. Either of these fuels may cause drivability problems and damage to the fuel system.

Discontinue using gasohol of any kind if drivability problems occur.

Vehicle damage or drivability problems may not be covered by the manufacturer's warranty if they result from the use of:

1. Gasohol containing more than 10% ethanol.
2. Gasoline or gasohol containing methanol.
3. Leaded fuel or leaded gasohol.

⚠ CAUTION

Never use gasohol which contains methanol. Discontinue use of any gasohol product which impairs drivability.

Use of MTBE

HYUNDAI recommends avoiding fuels containing MTBE (Methyl Tertiary Butyl Ether) over 15.0% vol. (Oxygen Content 2.7% weight) in your vehicle.

Fuel containing MTBE over 15.0% vol. (Oxygen Content 2.7% weight) may reduce vehicle performance and produce vapor lock or hard starting.

⚠ CAUTION

Your New Vehicle Limited Warranty may not cover damage to the fuel system and any performance problems that are caused by the use of fuels containing methanol or fuels containing MTBE (Methyl Tertiary Butyl Ether) over 15.0% vol. (Oxygen Content 2.7% weight.)

Do not use methanol

Fuels containing methanol (wood alcohol) should not be used in your vehicle. This type of fuel can reduce vehicle performance and damage components of the fuel system.

Fuel Additives

HYUNDAI recommends that you use good quality gasoline that meets Europe Fuel standards (EN228) or equivalents.

For customers who do not use good quality gasoline including fuel additives regularly, and have problems starting or the engine does not run smoothly, one bottle of additives added to the fuel tank at every 15,000km (for Europe)/5,000km (except Europe). Additives are available from your authorized HYUNDAI dealer along with information on how to use them.

Operation in foreign countries

If you are going to drive your vehicle in another country, be sure to:

- Observe all regulations regarding registration and insurance.
- Determine that acceptable fuel is available.

VEHICLE BREAK-IN PROCESS

No special break-in period is needed. By following a few simple precautions for the first 1,000 km (600 miles) you may add to the performance, economy and life of your vehicle.

- Do not race the engine.
- While driving, keep your engine speed (rpm, or revolutions per minute) between 2,000 rpm and 4,000 rpm.
- Do not maintain a single speed for long periods of time, either fast or slow. Varying engine speed is needed to properly break-in the engine.
- Avoid hard stops, except in emergencies, to allow the brakes to seat properly.
- Do not tow a trailer during the first 2,000 km (1,200 miles) of operation.

INDICATOR SYMBOLS ON THE INSTRUMENT CLUSTER

- Air bag warning light
- Seat belt warning light
- Turn signal indicator
- Front fog light indicator
- Rear fog light indicator*
- High beam indicator
- Low beam indicator*
- Tail light indicator
- Engine oil pressure warning light
- Parking brake & Brake fluid warning light
- Anti-lock brake system (ABS) warning light*
- Shift pattern indicator
- Low windshield washer fluid level warning light
- Charging system warning light
- Door ajar warning light
- Trunk lid open warning light
- Immobilizer indicator
- Engine coolant temperature warning light
- Low fuel level warning light
- Malfunction indicator light
- Electronic stability program (ESP) indicator*
- Electronic stability program (ESP) OFF indicator*
- Electric parking brake (EPB) malfunction indicator*
- AUTO HOLD indicator*
- Cruise control indicator*
- Cruise control SET indicator*
- Smart cruise control (SCC) malfunction indicator*
- Smart cruise control (SCC) sensor malfunction indicator*
- Low tire pressure telltale*/ TPMS malfunction indicator*
- Overspeed warning light*

* : if equipped

❊ For more detailed explanations, refer to “Instrument cluster” in section 4.

Your vehicle at a glance

2

Interior overview / 2-2
Instrument panel overview / 2-3
Engine compartment / 2-4

INTERIOR OVERVIEW

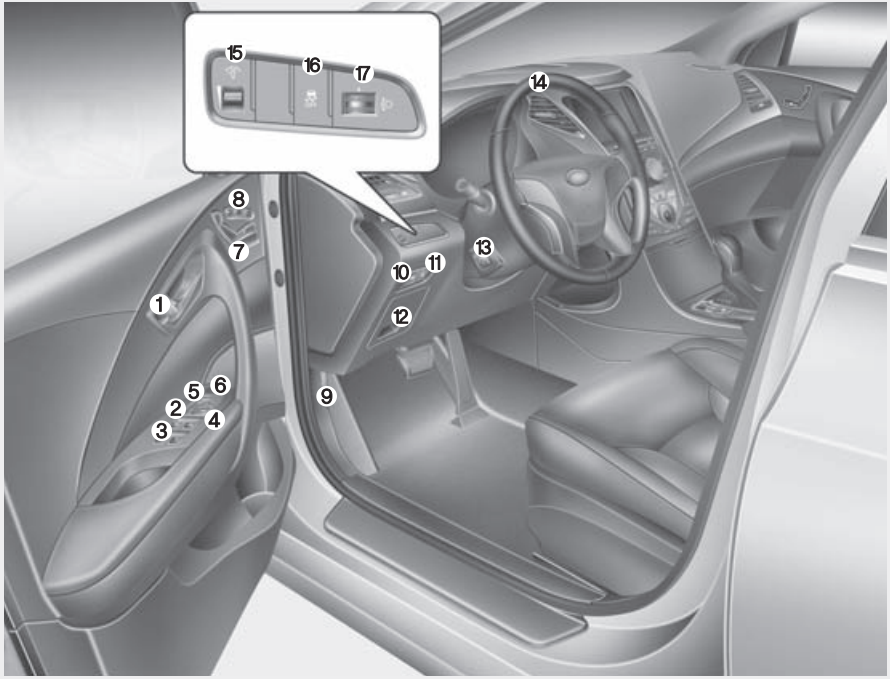

1. Door lock/unlock button 4-17
2. Central door lock switch.....4-17
3. Power window switches 4-22
4. Power window lock button 4-25
5. Outside rearview mirror control switch 4-42
6. Outside rearview mirror folding button*.....4-42
7. Driver's seat adjustment 3-4
8. Driver's position memory system* 4-35
9. Hood release lever.....4-26
10. Trunk lid release lever.....4-20
11. Fuel filler lid release button.....4-28
12. Fuse box 7-54
13. Steering wheel tilt control* 4-37
14. Steering wheel 4-37
15. Instrument panel illumination control switch 4-45
16. ESP OFF button* 5-30
17. Headlight leveling device*.....4-81

* : if equipped

OHG010001L

INSTRUMENT PANEL OVERVIEW

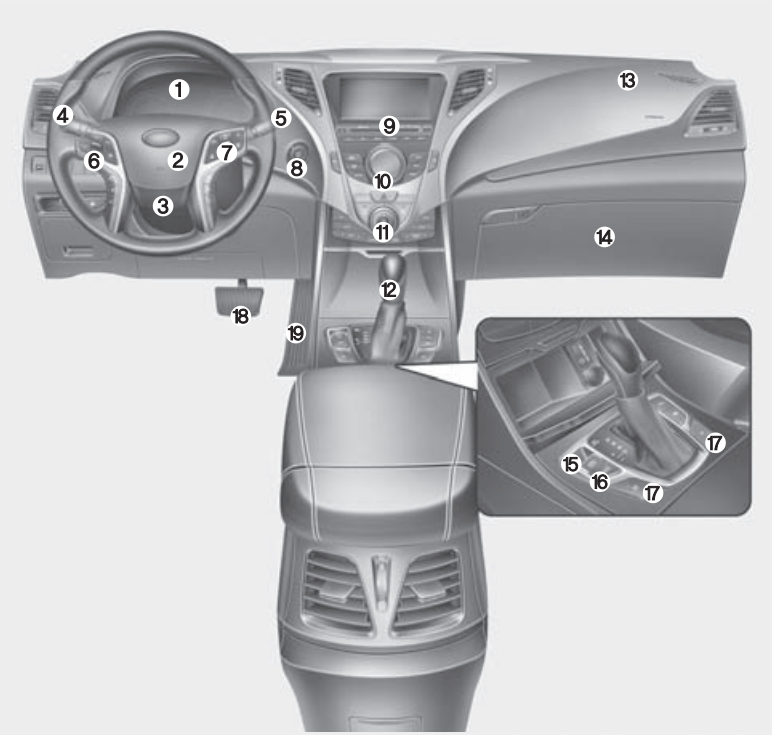

1. Instrument cluster 4-44
2. Horn 4-39
3. Driver's front air bag 3-46
4. Light control/Turn signals.....4-78
5. Wiper/Washer 4-83
6. Steering wheel audio control 4-126
7. Cruise control switch or
   Auto cruise control switch.....5-36/5-40
8. Ignition switch or
   ENGINE START/STOP button.....5-4/5-7
9. Audio system 4-125
10. Hazard warning flasher switch.....4-76
11. Climate control system 4-91/4-101
12. Shift lever 5-12
13. Passenger's front air bag.....3-46
14. Glove box.....4-117
15. Electric parking brake (EPB)
    switch*.....5-21
16. Auto hold control button* 5-26
17. Seat warmer* or
    Seat warmer with air ventilation* ..3-10/3-12
18. Brake pedal.....5-18
19. Accelerator pedal

* : if equipped

OHGC012002

ENGINE COMPARTMENT

■ 2.4L

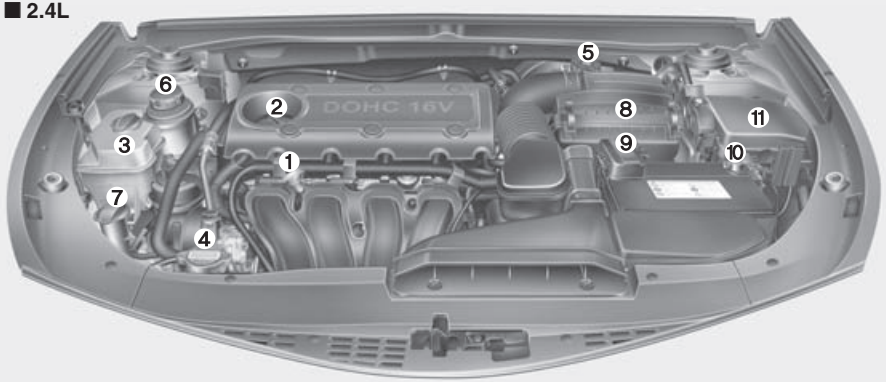

■ 3.0L

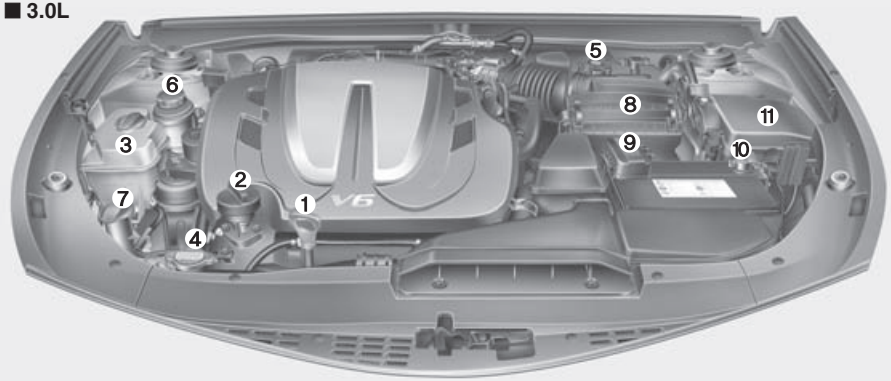

1. Engine oil dipstick 7-27
2. Engine oil filler cap 7-27
3. Engine coolant reservoir 7-29
4. Radiator cap 7-30
5. Brake fluid reservoir 7-31
6. Power steering fluid reservoir 7-32
7. Windshield washer fluid reservoir 7-33
8. Air cleaner.....7-34
9. Positive battery terminal.....7-40
10. Negative battery terminal 7-40
11. Fuse box 7-55

OHG010003L/OHG010004L

Seats / 3-2
Seat belts / 3-18
Child restraint system / 3-29
Air bag - supplemental restraint system / 3-39

Safety features of your vehicle

3

SEATS

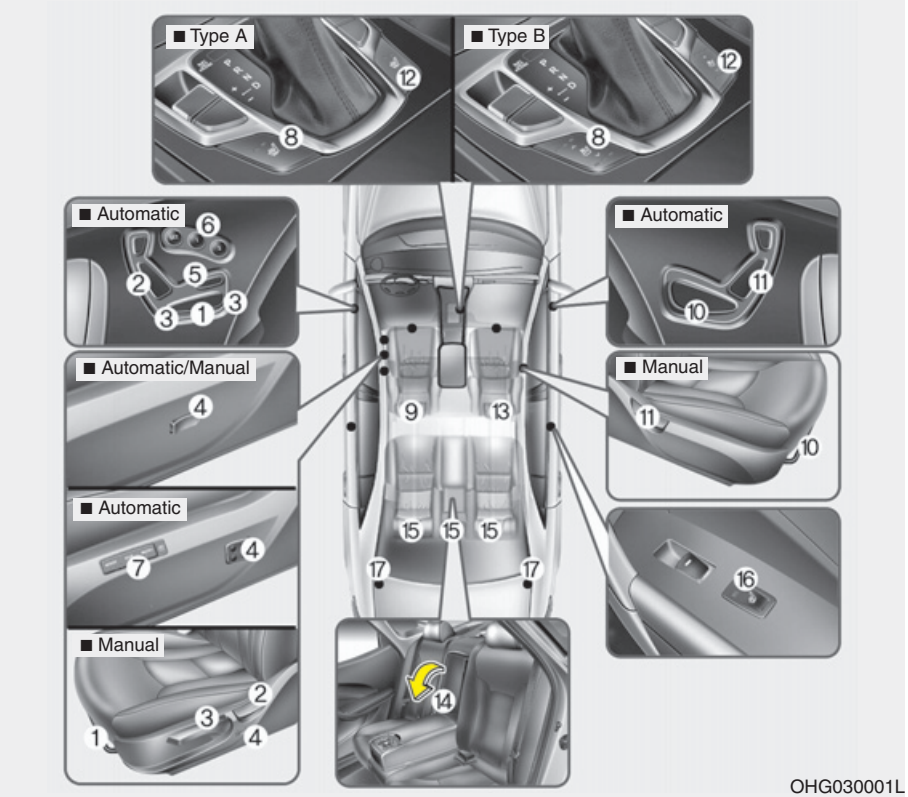

Driver's seat

(1) Forward and backward
(2) Seatback angle
(3) Seat cushion height
(4) Lumbar support*
(5) Cushion extension*
(6) Driver position memory system*
(7) Active seat*
(8) Seat warmer*/
Seat warmer with air ventilation*
(9) Headrest

Front passenger's seat

(10) Forward and backward
(11) Seatback angle*
(12) Seat warmer*/
Seat warmer with air ventilation*
(13) Headrest

Rear seat

(14) Armrest
(15) Headrest
(16) Seat warmer*
(17) Seat folding

*: if equipped

⚠ WARNING - Loose objects

Loose objects in the driver's foot area could interfere with the operation of the foot pedals, possibly causing an accident. Do not place anything under the front seats.

⚠ WARNING - Uprighting seat

When you return the seatback to its upright position, hold the seatback and return it slowly and be sure there are no other occupants around the seat. If the seatback is returned without being held and controlled, the back of the seat could spring forward resulting in accidental injury to a person struck by the seatback.

⚠ WARNING - Driver responsibility for passengers

Riding in a vehicle with the seatback reclined could lead to serious or fatal injury in an accident. If a seat is reclined during an accident, the occupant's hips may slide under the lap portion of the seat belt applying great force to the unprotected abdomen. Serious or fatal internal injuries could result. The driver must advise the passenger to keep the seatback in an upright position whenever the vehicle is in motion.

⚠ WARNING

Do not use a sitting cushion that reduces friction between the seat and passenger. The passenger's hips may slide under the lap portion of the seat belt during an accident or a sudden stop. Serious or fatal internal injuries could result because the seat belt can't operate normally.

⚠ WARNING - Driver's seat

- **Never attempt to adjust the seat while the vehicle is moving. This could result in loss of control, and an accident causing death, serious injury, or property damage.**
- **Do not allow anything to interfere with the normal position of the seatback. Storing items against a seatback or in any other way interfering with proper locking of a seatback could result in serious or fatal injury in a sudden stop or collision.**
- **Always drive and ride with your seatback upright and the lap portion of the seat belt snug and low across the hips. This is the best position to protect you in case of an accident.**
- **In order to avoid unnecessary and perhaps severe air bag injuries, always sit as far back as possible from the steering wheel while maintaining comfortable control of the vehicle. We recommend that your chest be at least 250 mm (10 inches) away from the steering wheel.**

⚠ WARNING

After adjusting the seat, always check that it is securely locked into place by attempting to move the seat forward or reverse without using the lock release lever. Sudden or unexpected movement of the driver's seat could cause you to lose control of the vehicle resulting in an accident.

⚠ WARNING

- **Use extreme caution so that hands or other objects are not caught in the seat mechanisms while the seat is moving.**
- **Do not put a cigarette lighter on the floor or seat. When you operate the seat, gas may gush out of the lighter and cause fire.**
- **If there are occupants in the rear seats, be careful while adjusting the front seat position.**

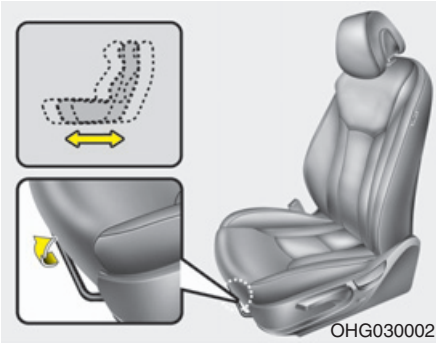
OHG030002

Front seat

Manual adjustment

Forward and backward

To move the seat forward or backward:

1. Pull the seat slide adjustment lever up and hold it.
2. Slide the seat to the position you desire.
3. Release the lever and make sure the seat is locked in place.

Adjust the seat before driving, and make sure the seat is locked securely by trying to move forward and backward without using the lever. If the seat moves, it is not locked properly.

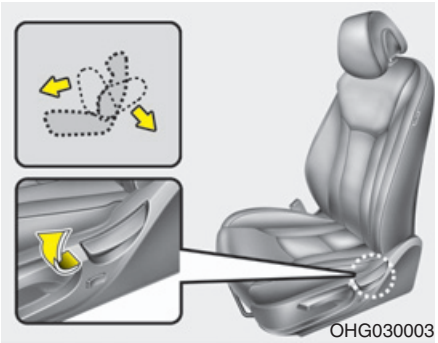
OHG030003

Seatback angle

To recline the seatback:

1. Lean forward slightly and lift up on the seatback recline lever.
2. Carefully lean back on the seat and adjust the seatback of the seat to the position you desire.
3. Release the lever and make sure the seatback is locked in place. (The lever MUST return to its original position for the seatback to lock.)

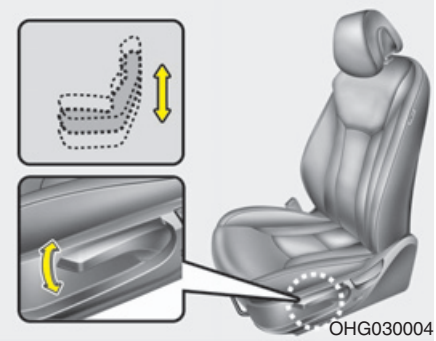

Seat cushion height (for driver's seat)

To change the height of the seat cushion, push the lever upwards or downwards.

- To lower the seat cushion, push the lever down several times.
- To raise the seat cushion, pull the lever up several times.

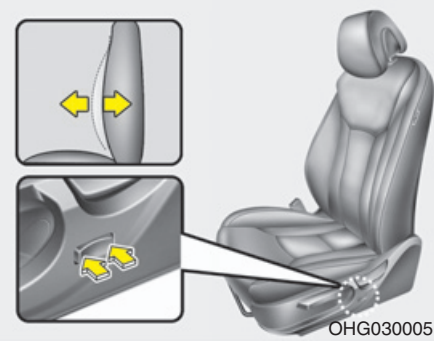

Lumbar support (for driver's seat)

1. Press the front portion of the switch to increase support, or the rear portion of the switch, to decrease support.
2. Release the switch once it reaches the desired position.

Automatic adjustment

The front seat can be adjusted by using the control switch located on the outside of the seat cushion. Before driving, adjust the seat to the proper position so as to easily control the steering wheel, pedals and switches on the instrument panel.

⚠ WARNING

The power seat is operable with the ignition OFF.

Therefore, children should never be left unattended in the car.

⚠ CAUTION

- ***The power seat is driven by an electric motor. Stop the motor operation once the adjustment is completed. Excessive operation may damage the electrical equipment.***
- ***When in operation, the power seat consumes a large amount of electrical power. To prevent unnecessary charging system drain, don't adjust the power seat longer than necessary while the engine is not running.***
- ***Do not operate two or more power seat control switches at the same time. Doing so may result in power seat motor or electrical component malfunction.***

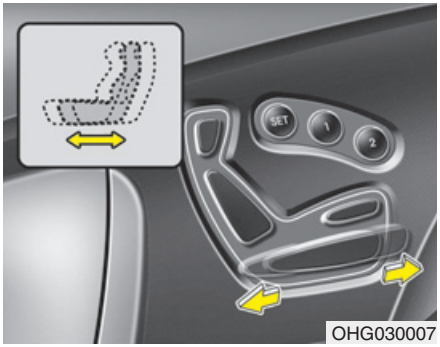

OHG030007

Forward and backward

1. Push the control switch forward or backward to move the seat to the desired position.
2. Release the switch once the seat reaches the desired position.

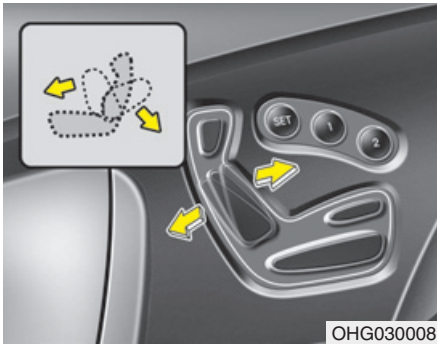

OHG030008

Seatback angle

1. Push the upper part of the control switch forward or backward to move the seatback to the desired angle.
2. Release the switch once the seat reaches the desired position.

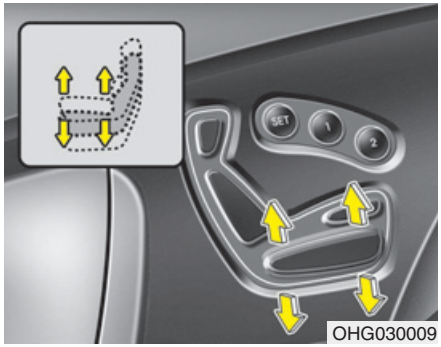

OHG030009

Seat cushion height (for driver's seat)

1. Pull the front portion of the control switch up to raise or down to lower the front part of the seat cushion. Pull the rear portion of the control switch up to raise or down to lower the rear part of the seat cushion.
2. Release the switch once the seat reaches the desired position.

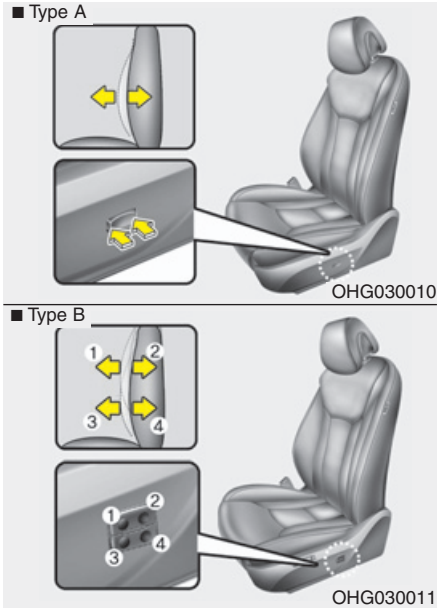

Lumbar support (for driver's seat)

1. Press the front portion of the switch to increase support or the rear portion of the switch to decrease support.
2. Release the switch once it reaches the desired position.

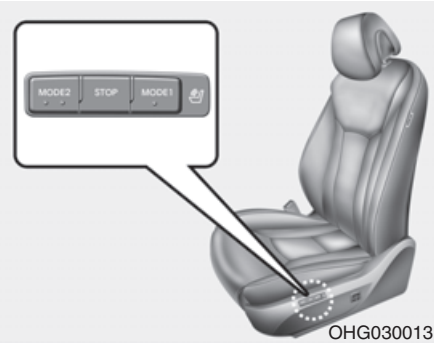

Active seat
(for driver's seat, if equipped)

- MODE 1 : Continuously activates both top and bottom lumber support.
- MODE 2 : Continuously activates the bottom lumber support.
- STOP: Stops the active seat function.

The active seat function is available for vehicles equipped with lumbar support type B.

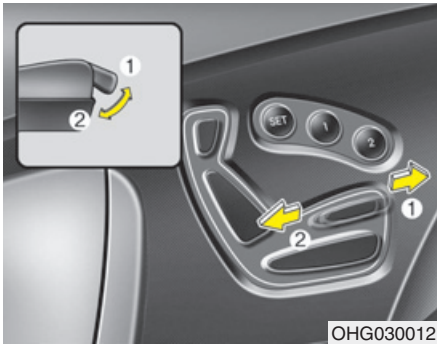

Cushion extension
(for driver's seat, if equipped)

1. Push the switch forward to raise the cushion extension. Push the switch rearward to lower the cushion extension.
2. Release the switch once the cushion extension reaches the desired position.

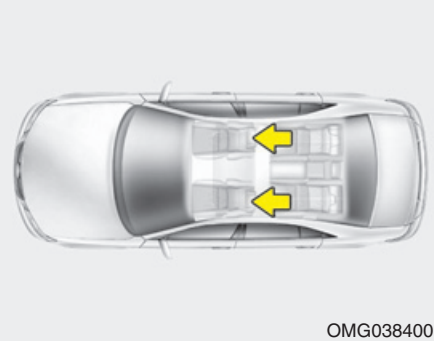
OMG038400

Headrest

The driver's and front passenger's seats are equipped with a headrest for the occupant's safety and comfort.

The headrest not only provides comfort for the driver and front passenger, but also helps to protect the head and neck in the event of a collision.

⚠ WARNING

- **For maximum effectiveness in case of an accident, the headrest should be adjusted so the middle of the headrest is at the same height of the center of gravity of an occupant's head. Generally, the center of gravity of most people's head is similar with the height of the top of their eyes. Also, adjust the headrest as close to your head as possible. For this reason, the use of a cushion that holds the body away from the seatback is not recommended.**
- **Do not operate the vehicle with the headrests removed as severe injury to the occupants may occur in the event of an accident. Headrests may provide protection against neck injuries when properly adjusted.**
- **Do not adjust the headrest position of the driver's seat while the vehicle is in motion.**

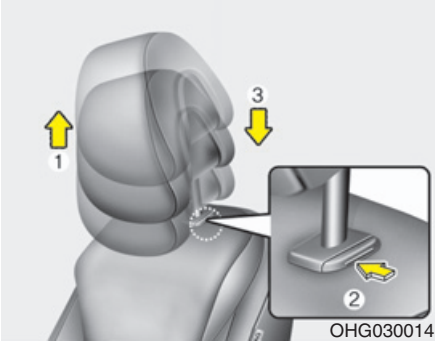

OHG030014

Adjusting the height up and down

To raise the headrest, pull it up to the desired position (1). To lower the headrest, push and hold the release button (2) on the headrest support and lower the headrest to the desired position (3).

⚠ CAUTION

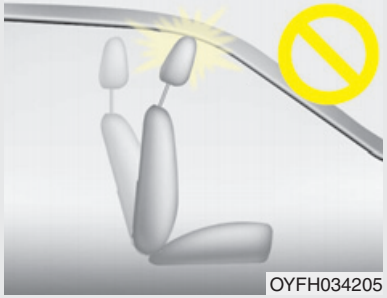

If you recline the seatback towards the front with the head restraint and seat cushion raised, the head restraint may come in contact with the sunvisor or other parts of the vehicle.

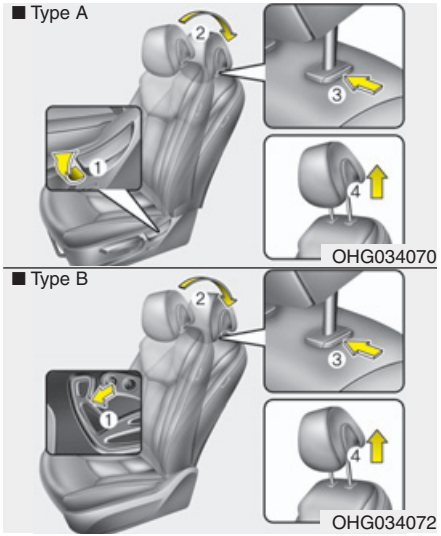

Removal

To remove the headrest:

1. Recline the seatback (2) with the recline lever or switch (1).
2. Raise headrest as far as it can go.
3. Press the headrest release button (3) while pulling the headrest up (4).

⚠ WARNING

NEVER allow anyone to ride in a seat with the headrest removed.

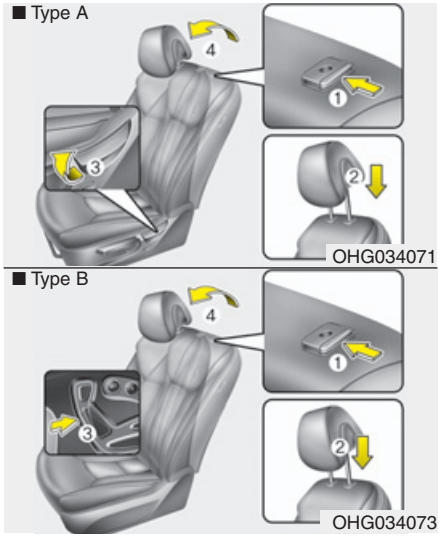

Reinstall

To reinstall the headrest:

1. Put the headrest poles (2) into the holes while pressing the release button (1).
2. Recline the seatback (4) with the recline lever or switch (3).
3. Adjust the headrest to the appropriate height.

⚠ WARNING

Always make sure the headrest locks into position after reinstalling and adjusting it properly.

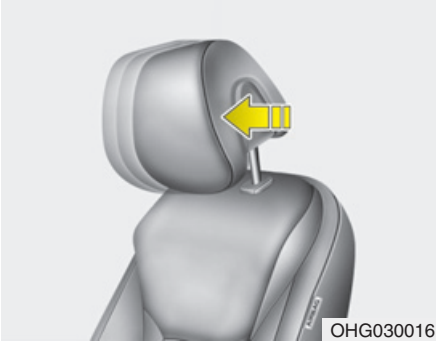

Forward and backward adjustment

The headrest may be adjusted forward to 3 different positions by pulling the headrest forward to the desired detent. To adjust the headrest to it's furthest backwards position, pull it fully forward to the farthest position and release it. Adjust the headrest so that it properly supports the head and neck.

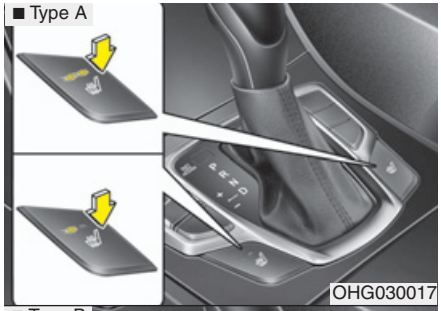

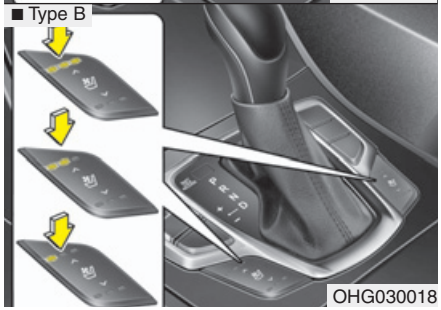

Seat warmer (if equipped)

The seat warmer is provided to warm the front seats during cold weather. With the ignition switch in the ON position, push either of the switches to warm the driver's seat or the front passenger's seat.

During mild weather or under conditions where the operation of the seat warmer is not needed, keep the switches in the "OFF" position.

- Each time you press the button, the temperature setting of the seat will change as follows :

■ Type A

OFF → HIGH( ) → LOW( )

■ Type B

OFF→HIGH( )→MIDDLE( )→LOW( )

- The seat warmer defaults to the OFF position whenever the ignition switch is turned on.

✻ NOTICE

With the seat warmer switch in the ON position, the heating system in the seat turns off or on automatically depending on the seat temperature.

⚠ CAUTION

- ***When cleaning the seats, do not use an organic solvent such as thinner, benzene, alcohol and gasoline. Doing so may damage the surface of the heater or seats.***
- ***To prevent overheating the seat warmer, do not place anything on the seats that insulates against heat, such as blankets, cushions or seat covers while the seat warmer is in operation.***
- ***Do not place heavy or sharp objects on seats equipped with seat warmers. Damage to the seat warming components could occur.***
- ***Do not change the seat cover. It may damage the seat warmer.***

⚠ WARNING - Seat warmer burns

Passengers should use extreme caution when using seat warmers due to the possibility of excess heating or burns. The occupants must be able to feel if the seat is becoming too warm and to turn the seat warmer off. The seat warmer may cause burns even at low temperatures, especially if used for long periods of time. In particular, the driver must exercise extreme care for the following types of passengers:

1. **Infants, children, elderly or disabled persons, or hospital outpatients**
2. **Persons with sensitive skin or those that burn easily**
3. **Fatigued individuals**
4. **Intoxicated individuals**
5. **Individuals taking medication that can cause drowsiness or sleepiness (sleeping pills, cold tablets, etc.)**

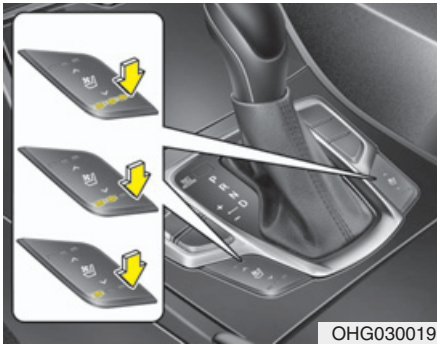
OHG030019

Air ventilation seat (if equipped)

The air ventilation is provided to cool the front seats during hot weather by blowing air through small vent holes on the surface of the seats and seatbacks. While the engine is running, push the rear portion of the switch to cool the driver's seat or the front passenger's seat.

When the operation of the air ventilation is not needed, keep the switches in the OFF position.

- Each time you push the switch, the airflow changes as follows:

OFF→HIGH( )→MIDDLE( )→LOW( )

- When the air ventilation seat is turned on, the seat may get cooler after about 5 minutes.
- The air ventilation seat defaults to the OFF position whenever the ignition switch is turned to the ON position.

⚠ CAUTION - Seat damage

- ***When cleaning the seats, do not use an organic solvent such as paint thinner, benzene, alcohol and gasoline. Doing so may damage the air ventilation seat.***
- ***Do not place heavy or sharp objects on the seat. Those things may damage the air ventilation seat.***
- ***Be careful not to spill liquid such as water or beverages on the seat. If you spill some liquid, wipe the seat with a dry towel. Before using the air ventilation seat, dry the seat completely.***
- ***Do not change the seat cover. It may damage the air ventilation seat.***

OHG030020

Seatback pocket

The seatback pocket is provided on the back of the front passenger's and driver's seatbacks.

⚠ WARNING - Seatback pockets

Do not put heavy or sharp objects in the seatback pockets. In an accident they could come loose from the pocket and injure vehicle occupants.

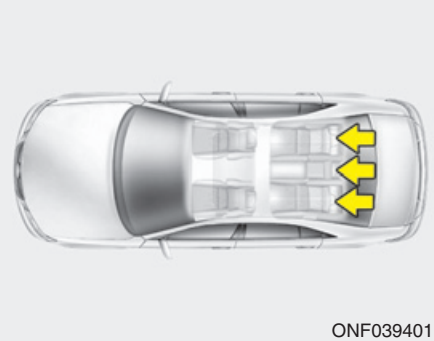
ONF039401

Rear seat

Headrest

The rear seat is equipped with headrests for the occupant's safety and comfort.

The headrest not only provides comfort for passengers, but also helps to protect the head and neck in the event of a collision.

⚠ WARNING

- **For maximum effectiveness in case of an accident, the headrest should be adjusted so the middle of the headrest is at the same height of the center of gravity of an occupant's head. Generally, the center of gravity of most people's head is similar with the height of the top of their eyes. Also adjust the headrest as close to your head as possible. For this reason, the use of a cushion that holds the body away from the seatback is not recommended.**
- **Do not operate the vehicle with the headrests removed. Severe injury to an occupant may occur in the event of an accident. Headrests may provide protection against severe neck injuries when properly adjusted.**
- **When there is no occupant in the rear seats, adjust the height of the headrest to the lowest position. The rear seat headrest can reduce the visibility of the rear area.**

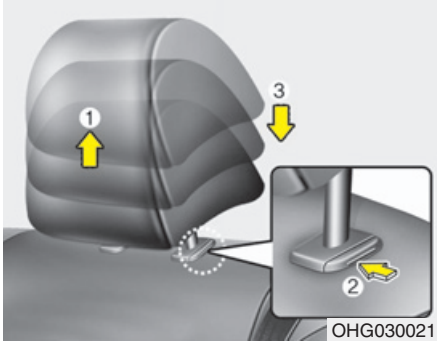

OHG030021

Adjusting the height up and down (if equipped)

To raise the headrest, pull it up to the desired position (1). To lower the headrest, push and hold the release button (2) on the headrest support and lower the headrest to the desired position (3).

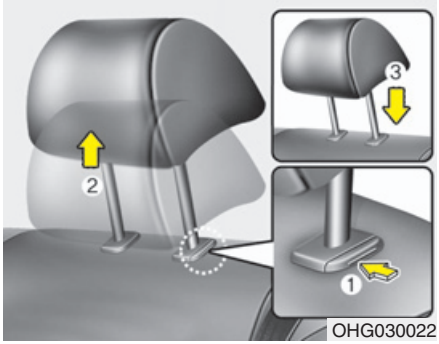

Removal and installation (if equipped)

To remove the headrest, raise it as far as it can go then press the release button (1) while pulling upward (2).

To reinstall the headrest, put the headrest poles (3) into the holes while pressing the release button (1). Then adjust it to the appropriate height.

⚠ WARNING

Make sure the headrest locks in position after adjusting it to properly protect the occupants.

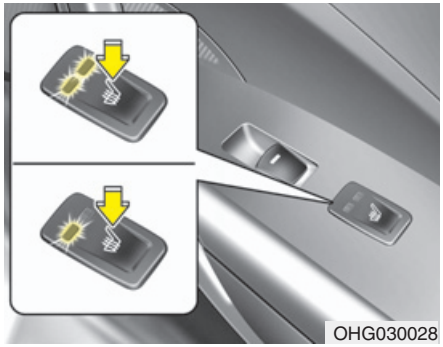

Seat warmer (if equipped)

The seat warmer is provided to warm the rear seats during cold weather. With the ignition switch in the ON position, push either of the switches to warm the seat.

During mild weather or under conditions where the operation of the seat warmer is not needed, keep the switches in the OFF position.

- Each time you press the button, the temperature setting of the seat will change as follows :

OFF → HIGH( ) → LOW( )

- The seat warmer defaults to the OFF position whenever the ignition switch is turned on.

✻ NOTICE

With the seat warmer switch in the ON position, the heating system in the seat turns off or on automatically depending on the seat temperature.

⚠ CAUTION

- ***When cleaning the seats, do not use an organic solvent such as thinner, benzene, alcohol and gasoline. Doing so may damage the surface of the heater or seats.***
- ***To prevent overheating the seat warmer, do not place anything on the seats that insulates against heat, such as blankets, cushions or seat covers while the seat warmer is in operation.***
- ***Do not place heavy or sharp objects on seats equipped with seat warmers. Damage to the seat warming components could occur.***
- ***Do not change the seat cover. It may damage the seat warmer.***

⚠ WARNING - Seat warmer burns

Passengers should use extreme caution when using seat warmers due to the possibility of excess heating or burns. The seat warmer may cause burns even at low temperatures, especially if used for long periods of time. In particular, the driver must exercise extreme care for the following types of passengers:

1. **Infants, children, elderly or disabled persons, or hospital outpatients**
2. **Persons with sensitive skin or those that burn easily**
3. **Fatigued individuals**
4. **Intoxicated individuals**
5. **Individuals taking medication that can cause drowsiness or sleepiness (sleeping pills, cold tablets, etc.)**

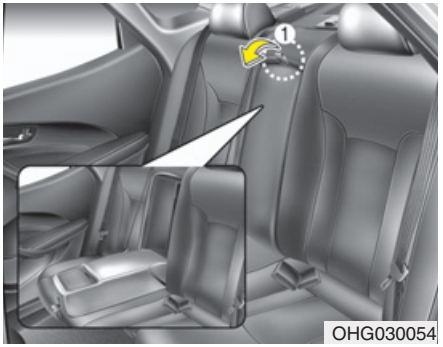

Armrest

To use the armrest, swing down the armrest to the lowest position (1).

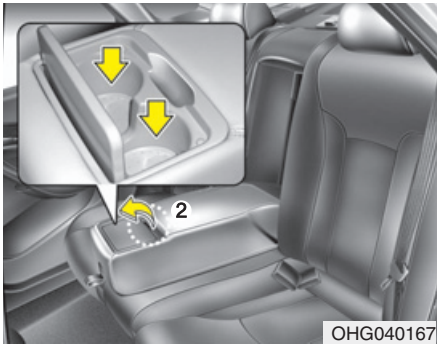

Cup holder

To use the cup holder, pull up the cover (2).

Folding the rear seat

The rear seatbacks may be folded to facilitate carrying long items or to increase the luggage capacity of the vehicle.

⚠ WARNING

The purpose of the fold-down rear seatbacks is to allow you to carry longer objects than could not otherwise be accommodated.

Never allow passengers to sit on top of the folded down seatback while the car is moving as this is not a proper seating position and no seat belts are available for use. This could result in serious injury or death in case of an accident or sudden stop. Objects carried on the folded down seatback should not extend higher than the top of the front seats. This could allow cargo to slide forward and cause injury or damage during sudden stops.

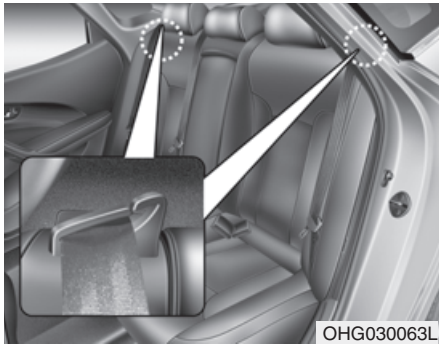
OHG030063L

To fold down the rear seatback:

1. Make sure the rear seat belt webbing is in the guide to prevent the seat belt from being damaged.
2. Set the front seatback to the upright position and if necessary, slide the front seat forward.
3. Lower the rear headrests to the lowest position.

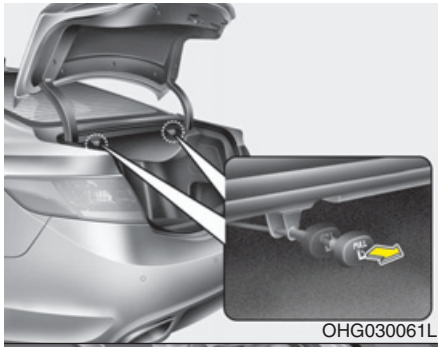
OHG030061L

OHG030062L

4. Pull on the seatback folding lever, then fold the seat toward the front of the vehicle.

5. To use the rear seat, lift and pull the seatback backward. Push back the seatback firmly until it clicks into place. Make sure the seatback is locked in place. When you return the seatback to its upright position, always be sure it has locked into position by pushing on the top of the seatback.
6. Return the rear seat belt to the proper position.

⚠ WARNING

When you return the rear seatback to its upright position after being folded down:

Be careful not to damage the seat belt webbing or buckle. Do not allow the seat belt webbing or buckle to get caught or pinched in the rear seat. Ensure that the seatback is completely locked into its upright position by pushing on the top of the seatback. Otherwise, in an accident or sudden stop, the seat could fold down and allow cargo to enter the passenger compartment, which could result in serious injury or death.

⚠ WARNING - Uprighting seat

When you return the seatback to its upright position, hold the seatback and return it slowly. If the seatback is returned without holding it, the back of the seat could spring forward resulting in injury caused by being struck by the seatback.

⚠ CAUTION - Rear seat belts

When returning the rear seatbacks to the upright position, remember to return the rear shoulder belts to their proper position. Routing the seat belt webbing through the rear seat belt guides will help keep the belts from being trapped behind or under the seats.

⚠ WARNING - Cargo

Cargo should always be secured to prevent it from being thrown about the vehicle in a collision and causing injury to the vehicle occupants. Special care of objects should be taken when placing them in the rear seats, since those may hit the front seat occupants in a frontal collision.

⚠ WARNING - Cargo loading

Make sure the engine is off, the automatic transaxle is in P (Park) and the parking brake is securely applied whenever loading or unloading cargo. Failure to take these steps may allow the vehicle to move if the shift lever is inadvertently moved to another position.

SEAT BELTS

Seat belt restraint system

⚠ WARNING

- For maximum restraint system protection, the seat belts must always be used whenever the car is moving.
- Seat belts are most effective when seatbacks are in the upright position.
- Children age 12 and younger must always be properly restrained in the rear seat. Never allow children to ride in the front passenger seat. If a child over 12 must be seated in the front seat, he/she must be properly belted and the seat should be moved as far back as possible.
- Never wear the shoulder belt under your arm or behind your back. An improperly positioned shoulder belt can cause serious injuries in a crash. The shoulder belt should be positioned midway over your shoulder across your collarbone.

(Continued)

(Continued)

- Never wear a seat belt over fragile objects. If there is a sudden stop or impact, the seat belt can damage it.
- Avoid wearing twisted seat belts. A twisted belt can't do its job as well. In a collision, it could even cut into you. Be sure the belt webbing is straight and not twisted.
- Be careful not to damage the belt webbing or hardware. If the belt webbing or hardware is damaged, replace it.

⚠ WARNING

Seat belts are designed to bear upon the bony structure of the body, and should be worn low across the front of the pelvis or the pelvis, chest and shoulders, as applicable; wearing the lap section of the belt across the abdominal area must be avoided.

(Continued)

(Continued)

Seat belts should be adjusted as firmly as possible, consistent with comfort, to provide the protection for which they have been designed.

A slack belt will greatly reduce the protection afforded to the wearer.

Care should be taken to avoid contamination of the webbing with polishes, oils and chemicals, and particularly battery acid. Cleaning may safely be carried out using mild soap and water. The belt should be replaced if webbing becomes frayed, contaminated or damaged.

It is essential to replace the entire assembly after it has been worn in a severe impact even if damage to the assembly is not obvious. Belts should not be worn with straps twisted. Each belt assembly must only be used by one occupant; it is dangerous to put a belt around a child being carried on the occupant's lap.

⚠ WARNING

- **No modifications or additions should be made by the user which will either prevent the seat belt adjusting devices from operating to remove slack, or prevent the seat belt assembly from being adjusted to remove slack.**
- **When you fasten the seat belt, be careful not to latch the seat belt in buckles of other seat. It's very dangerous and you may not be protected by the seat belt properly.**
- **Do not unfasten the seat belt and do not fasten and unfasten the seat belt repeatedly while driving. This could result in loss of control, and an accident causing death, serious injury, or property damage.**
- **When fastening the seat belt, make sure that the seat belt does not pass over objects that are hard or can break easily.**
- **Make sure there is nothing in the buckle. The seat belt may not be fastened securely.**

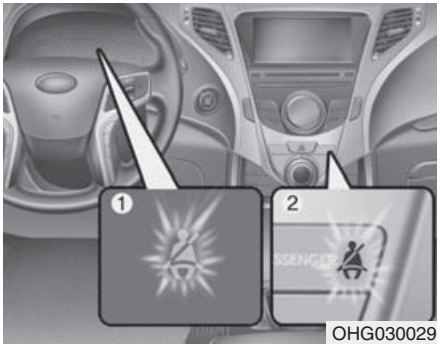

Seat belt warning

As a reminder to the driver and passenger, the seatbelt warning light will blink and warning chime will sound as follows:

Driver's side (1)

Warning light

- The seat belt warning light will blink for approximately 6 seconds each time you turn the ignition switch ON regardless of belt fastening.
- The seat belt warning light will blink for approximately 6 seconds if the belt is unfastened after the ignition switch is ON.
- The seat belt warning light will blink for approximately 6 seconds if the belt is unfastened when the ignition switch is ON.
- The seat belt warning light will blink if the seat belt is unfastened when the vehicle speed is over 9km/h(6mph). The warning light will immediately stop blinking if the vehicle speed is below 6km/h(3mph).

Warning chime (if equipped)

- The seat belt warning chime will sound for approximately 6 seconds each time you turn the ignition switch ON if the seat belt is unfastened.
- The seat belt warning light chime will sound if the seat belt is unfastened when the vehicle speed is over 20km/h(12mph). The warning chime will immediately stop if the vehicle speed is below 20km/h(12mph).

Front passenger's side (2)

Warning light

The seat belt warning light will blink if the seat belt is unfastened when the vehicle speed is over 9km/h(6mph). The warning light will immediately stop blinking if the vehicle speed is below 6km/h(3mph).

⚠ WARNING

Riding in an improper position adversely affects the front passenger's seat belt warning system. It is important for the driver to instruct the passenger as to the proper seating instructions as contained in this manual.

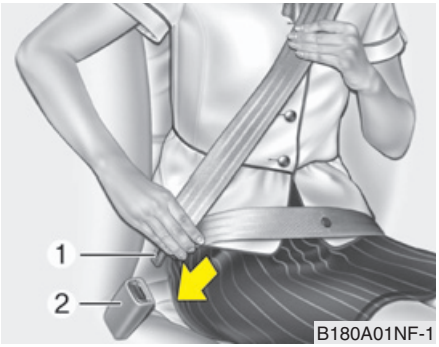

Lap/shoulder belt

To fasten your seat belt:

To fasten your seat belt, pull it out of the retractor and insert the metal tab (1) into the buckle (2). There will be an audible "click" when the tab locks into the buckle.

The seat belt automatically adjusts to the proper length only after the lap belt portion is adjusted manually so that it fits snugly around your hips. If you lean forward in a slow, easy motion, the belt will extend and let you move around. If there is a sudden stop or impact, however, the belt will lock into position. It will also lock if you try to lean forward too quickly.

✻ NOTICE

If you are not able to pull out the seat belt from the retractor, firmly pull the belt out and release it. After release, you will be able to pull the belt out smoothly.

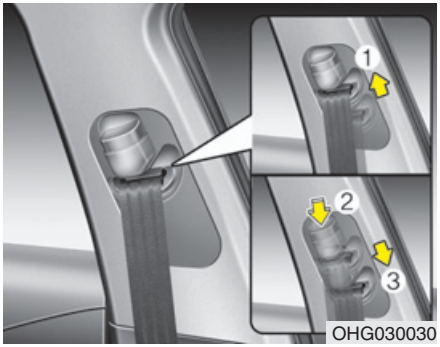

OHG030030

Height adjustment (front seat)

You can adjust the height of the shoulder belt anchor to one of 4 positions for maximum comfort and safety.

The height of the adjusting seat belt should not be too near your neck. The shoulder portion should be adjusted so that it lies across your chest and midway over your shoulder nearest the door and not your neck.

To adjust the height of the seat belt anchor, lower or raise the height adjuster into an appropriate position.

To raise the height adjuster, pull it up (1). To lower it, push it down (3) while pressing the height adjuster button (2).

Release the button to lock the anchor into position. Try sliding the height adjuster to make sure that it has locked into position.

⚠ WARNING

- **Verify the shoulder belt anchor is locked into position at the appropriate height. Never position the shoulder belt across your neck or face. Improperly positioned seat belts can cause serious injuries in an accident.**
- **Failure to replace seat belts after an accident could leave you with damaged seat belts that will not provide protection in the event of another collision leading to personal injury or death. Replace your seat belts after being in an accident as soon as possible.**

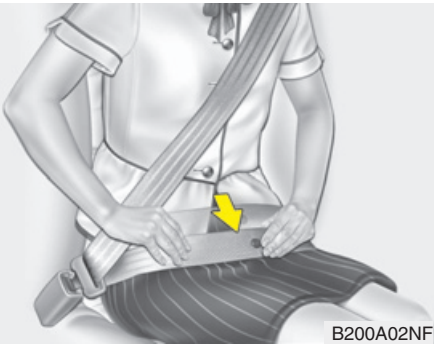
B200A02NF

⚠ WARNING

You should place the lap belt portion as low as possible and snugly across your hips, not on your waist. If the lap belt is located too high on your waist, it may increase the chance of injury in the event of a collision. Both arms should not be under or over the belt. Rather, one should be over and the other under, as shown in the illustration.

Never wear the seat belt under the arm nearest the door.

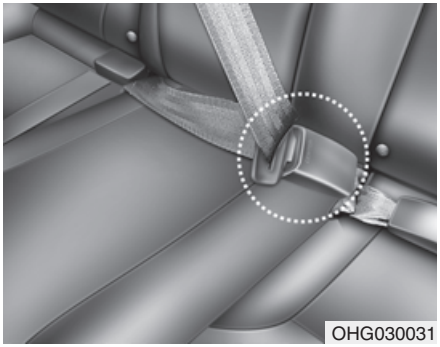

When using the rear center seat belt, the buckle with the “CENTER” mark must be used.

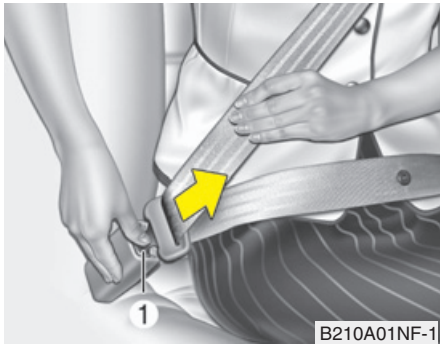

To release the seat belt:

The seat belt is released by pressing the release button (1) in the locking buckle. When it is released, the belt should automatically draw back into the retractor.

If this does not happen, check the belt to be sure it is not twisted, then try again.

Pre-tensioner seat belt (if equipped)

Your vehicle is equipped with driver's and front passenger's pre-tensioner seat belts. The purpose of the pre-tensioner is to make sure that the seat belts fit tightly against the occupant's body in certain frontal collisions. The pre-tensioner seat belts may be activated in crashes where the frontal collision is severe enough.

When the vehicle stops suddenly, or if the occupant tries to lean forward too quickly, the seat belt retractor will lock into position. In certain frontal collisions, the pre-tensioner will activate and pull the seat belt into tighter contact against the occupant's body.

If the system senses excessive tension on the driver or passenger's seat belt when the pre-tensioner activates, the load limiter inside the pre-tensioner will release some of the pressure on the affected seat belt.

⚠ WARNING

For your safety, be sure that the belt webbing is not loose or twisted and always sit properly on your seat.

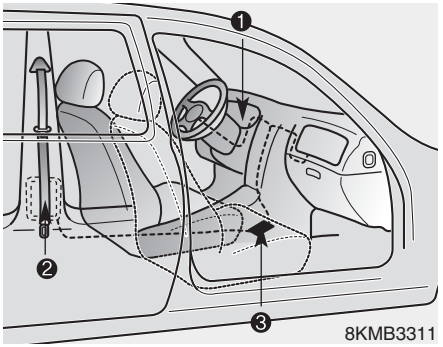

The seat belt pre-tensioner system consists mainly of the following components. Their locations are shown in the illustration:

1. SRS air bag warning light
2. Retractor pre-tensioner assembly
3. SRS control module

⚠ WARNING

To obtain maximum benefit from a pre-tensioner seat belt:

1. **The seat belt must be worn correctly and adjusted to the proper position. Please read and follow all of the important information and precautions about your vehicle's occupant safety features – including seat belts and air bags – that are provided in this manual.**
2. **Be sure you and your passengers always wear seat belts properly.**

✻ NOTICE

- When the pre-tensioner seat belts are activated, a loud noise may be heard and fine dust, which may appear to be smoke, may be visible in the passenger compartment. These are normal operating conditions and are not hazardous.
- Although it is harmless, the fine dust may cause skin irritation and should not be breathed for prolonged periods. Wash all exposed skin areas thoroughly after an accident in which the pre-tensioner seat belts were activated.
- Because the sensor that activates the SRS air bag is connected with the pre-tensioner seat belt, the SRS air bag warning light on the instrument panel will illuminate for approximately 6 seconds after the ignition switch has been turned to the ON position, and then it should turn off.

⚠ CAUTION

If the pre-tensioner seat belt is not working properly, this warning light will illuminate even if there is no malfunction of the SRS air bag. If the SRS air bag warning light does not illuminate when the ignition switch is turned to ON, or if it remains illuminated after illuminating for approximately 6 seconds, or if it illuminates while the vehicle is being driven, have an authorized HYUNDAI dealer inspect the pre-tensioner seat belt and SRS air bag system as soon as possible.

⚠ WARNING

- **Pre-tensioners are designed to operate only one time. After activation, pre-tensioner seat belts must be replaced. All seat belts, of any type, should always be replaced after they have been worn during a collision.**
- **The pre-tensioner seat belt assembly mechanisms become hot during activation. Do not touch the pre-tensioner seat belt assemblies for several minutes after they have been activated.**
- **Do not attempt to inspect or replace the pre-tensioner seat belts yourself. This must be done by an authorized HYUNDAI dealer.**
- **Do not strike the pre-tensioner seat belt assemblies.**

(Continued)

(Continued)

- **Improper handling of the pre-tensioner seat belt assemblies, and failure to heed the warnings not to strike, modify, inspect, replace, service or repair the pre-tensioner seat belt assemblies may lead to improper operation or inadvertent activation and serious injury.**
- **Always wear the seat belts when driving or riding in a motor vehicle.**
- **If the vehicle or pre-tensioner seat belt must be discarded, contact an authorized HYUNDAI dealer.**

⚠ CAUTION

Body work on the front area of the vehicle may damage the pre-tensioner seat belt system. Therefore, we recommend that the system be serviced by an authorized HYUNDAI dealer.

Seat belt precautions

⚠ WARNING

All occupants of the vehicle must wear their seat belts at all times. Seat belts and child restraints reduce the risk of serious or fatal injuries for all occupants in the event of a collision or sudden stop. Without a seat belt, occupants could be shifted too close to a deploying air bag, strike the interior structure or be thrown from the vehicle. Properly worn seat belts greatly reduce these hazards.

Always follow the precautions about seat belts, air bags and occupant seat contained in this manual.

Infant or small child

You should be aware of the specific requirements in your country. Child and/or infant seats must be properly placed and installed in the rear seat. For more information about the use of these restraints, refer to “Child restraint system” in this section.

⚠ WARNING

Every person in your vehicle needs to be properly restrained at all times, including infants and children. Never hold a child in your arms or lap when riding in a vehicle. The violent forces created during a crash will tear the child from your arms and throw the child against the interior. Always use a child restraint appropriate for your child's height and weight.

✻ NOTICE

Small children are best protected from injury in an accident when properly restrained in the rear seat by a child restraint system that meets the requirements of the Safety Standards of your country. Before buying any child restraint system, make sure that it has a label certifying that it meets Safety Standards of your country. The restraint must be appropriate for your child's height and weight. Check the label on the child restraint for this information. Refer to "Child restraint system" in this section.

Larger children

Children who are too large for child restraint systems should always occupy the rear seat and use the available lap/shoulder belts. The lap portion should be fastened snug on the hips and as low as possible. Check if the belt fits periodically. A child's squirming could put the belt out of position. Children are afforded the most safety in the event of an accident when they are restrained by a proper restraint system in the rear seat. If a larger child (over age 12) must be seated in the front seat, the child should be securely restrained by the available lap/shoulder belt and the seat should be placed in the rearmost position. Children age 12 and under should be restrained securely in the rear seat. NEVER place a child age 12 and under in the front seat. NEVER place a rear facing child seat in the front seat of a vehicle.

If the shoulder belt portion slightly touches the child's neck or face, try placing the child closer to the center of the vehicle. If the shoulder belt still touches their face or neck they need to be returned to a child restraint system.

⚠ WARNING - Shoulder belts on small children

- **Never allow a shoulder belt to be in contact with a child's neck or face while the vehicle is in motion.**
- **If seat belts are not properly worn and adjusted on children, there is a risk of death or serious injury.**

Pregnant women

The use of a seat belt is recommended for pregnant women to lessen the chance of injury in an accident. When a seat belt is used, the lap belt portion should be placed as low and snugly as possible on the hips, not across the abdomen. For specific recommendations, consult a physician.

⚠ WARNING - Pregnant women

Pregnant women must never place the lap portion of the safety belt over the area of the abdomen where the fetus is located or above the abdomen where the belt could crush the fetus during an impact.

Injured person

A seat belt should be used when an injured person is being transported. When this is necessary, you should consult a physician for recommendations.

One person per belt

Two people (including children) should never attempt to use a single seat belt. This could increase the severity of injuries in case of an accident.

Do not lie down

To reduce the chance of injuries in the event of an accident and to achieve maximum effectiveness of the restraint system, all passengers should be sitting up and the front seats should be in an upright position when the car is moving. A seat belt cannot provide proper protection if the person is lying down in the rear seat or if the front seat is in a reclined position.

⚠ WARNING

Riding with a reclined seatback increases your chance of serious or fatal injuries in the event of a collision or sudden stop. The protection of your restraint system (seat belts and air bags) is greatly reduced by reclining your seat. Seat belts must be snug against your hips and chest to work properly. The more the seatback is reclined, the greater the chance that an occupant's hips will slide under the lap belt causing serious internal injuries or the occupant's neck could strike the shoulder belt. Drivers and passengers should always sit well back in their seats, properly belted, and with the seatbacks upright.

Care of seat belts

Seat belt systems should never be disassembled or modified. In addition, care should be taken to assure that seat belts and belt hardware are not damaged by seat hinges, doors or other abuse.

⚠ WARNING

When you return the rear seatback to its upright position after the rear seatback was folded down, be careful not to damage the seat belt webbing or buckle. Be sure that the webbing or buckle does not get caught or pinched in the rear seat. A seat belt with damaged webbing or buckle will not be as strong and could possibly fail during a collision or sudden stop, resulting in serious injury.

Periodic inspection

All seat belts should be inspected periodically for wear or damage of any kind. Any damaged parts should be replaced as soon as possible.

Keep belts clean and dry

Seat belts should be kept clean and dry. If belts become dirty, they can be cleaned by using a mild soap solution and warm water. Bleach, dye, strong detergents or abrasives should not be used because they may damage and weaken the fabric.

When to replace seat belts

Entire in-use seat belt assembly or assemblies should be replaced if the vehicle has been involved in an accident. This should be done even if no damage is visible. Additional questions concerning seat belt operation should be directed to an authorized HYUNDAI dealer.

CHILD RESTRAINT SYSTEM

Children riding in the car should sit in the rear seat and must always be properly restrained to minimize the risk of injury in an accident, sudden stop or sudden maneuver. According to accident statistics, children are safer when properly restrained in the rear seats than in the front seat. Larger children not in a child restraint should use one of the seat belts provided.

You should be aware of the specific requirements in your country. Child and/or infant safety seats must be properly placed and installed in the rear seat. You must use a commercially available child restraint system that meets the requirements of the Safety Standards of your country.

Child restraint systems are designed to be secured in vehicle seats by the lap belt portion of a lap/shoulder belt.

Children could be injured or killed in a crash if their restraints are not properly secured. For small children and babies, a child seat or infant seat must be used.

Before buying a particular child restraint system, make sure it fits your car seat and seat belts, and fits your child. Follow all the instructions provided by the manufacturer when installing the child restraint system.

⚠ WARNING

- **A child restraint system must be placed in the rear seat. Never install a child or infant seat on the front passenger's seat. Should an accident occur and cause the passenger-side air bag to deploy, it could severely injure or kill an infant or child seated in an infant or child seat. Thus only use a child restraint in the rear seat of your vehicle.**
- **A seat belt or child restraint system can become very hot if it is left in a closed vehicle on a sunny day, even if the outside temperature does not feel hot. Be sure to check the seat cover and buckles before placing a child there.**
- **When the child restraint system is not in use, store it in the luggage area or fasten it with a seat belt so that it will not be thrown forward in the case of a sudden stop or an accident.**
- **Children may be seriously injured or killed by an inflating air bag. All children, even those too large for child restraints, must ride in the rear seat.**

⚠ WARNING

To reduce the chance of serious or fatal injuries:

- **Children of all ages are safer when restrained in the rear seat. A child riding in the front passenger seat can be forcefully struck by an inflating air bag resulting in serious or fatal injuries.**
- **Always follow the child restraint system manufacturer's instructions for installation and use of the child restraint.**
- **Always make sure the child seat is secured properly in the car and your child is securely restrained in the child seat.**
- **Never hold a child in your arms or lap when riding in a vehicle. The violent forces created during a crash will tear the child from your arms and throw the child against the car's interior.**
- **Never put a seat belt over yourself and a child. During a crash, the belt could press deep into the child causing serious internal injuries.**

(Continued)

(Continued)

- **Never leave children unattended in a vehicle – not even for a short time. The car can heat up very quickly, resulting in serious injuries to children inside. Even very young children may inadvertently cause the vehicle to move, entangle themselves in the windows, or lock themselves or others inside the vehicle.**
- **Never allow two children, or any two persons, to use the same seat belt.**
- **Children often squirm and reposition themselves improperly. Never let a child ride with the shoulder belt under their arm or behind their back. Always properly position and secure children in the rear seat.**
- **Never allow a child to stand-up or kneel on the seat or floor of a moving vehicle. During a collision or sudden stop, the child can be violently thrown against the vehicle's interior, resulting in serious injury.**

(Continued)

(Continued)

- **Never use an infant carrier or a child safety seat that "hooks" over a seatback, it may not provide adequate security in an accident.**
- **Seat belts can become very hot, especially when the car is parked in direct sunlight. Always check seat belt buckles before fastening them over a child.**
- **After an accident, have an authorized HYUNDAI dealer check the child restraint system, seat belt, tether anchor and lower anchor.**
- **If there is not enough space to place the child restraint system because of the driver's seat, install the child restraint system in the rear right seat.**

■ Rearward-facing child restraint system

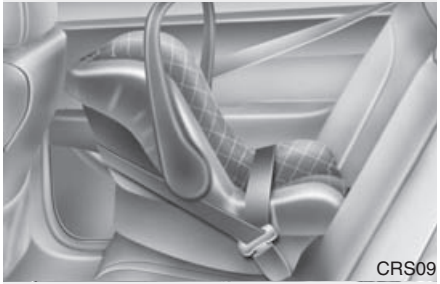

■ Forward-facing child restraint system

Using a child restraint system

For small children and babies, the use of a child seat or infant seat is required. This child seat or infant seat should be of appropriate size for the child and should be installed in accordance with the manufacturer's instructions.

For safety reasons, we recommend that the child restraint system be used in the rear seats.

⚠ WARNING

Never place a rear-facing child restraint in the front passenger seat, because of the danger that an inflating passenger-side air bag could impact the rear-facing child restraint and kill the child.

⚠ WARNING - Child seat installation

- **A child can be seriously injured or killed in a collision if the child restraint is not properly anchored to the car and the child is not properly restrained in the child restraint. Before installing the child restraint system, read the instructions supplied by the child restraint system manufacturer.**
- **If the seat belt does not operate as described in this section, have the system checked immediately by your authorized HYUNDAI dealer.**
- **Failure to observe this manual's instructions regarding child restraint systems and the instructions provided with the child restraint system could increase the chance and/or severity of injury in an accident.**

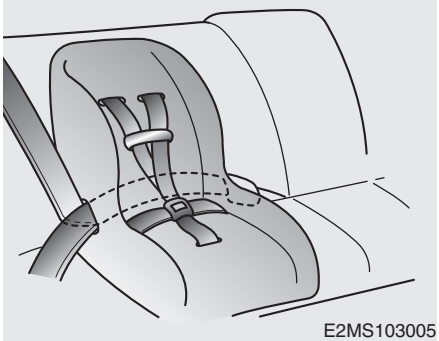
E2MS103005

Installing a child restraint system by lap/shoulder belt

To install a child restraint system on the outboard or center rear seats, do the following:

1. Place the child restraint system in the seat and route the lap/shoulder belt around or through the restraint, following the restraint manufacturer's instructions. Be sure the seat belt webbing is not twisted.

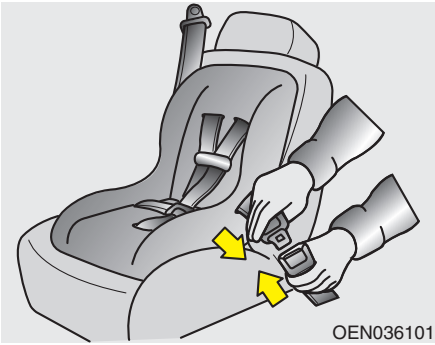
OEN036101

2. Fasten the lap/shoulder belt latch into the buckle. Listen for the distinct "click" sound.

Position the release button so that it is easy to access in case of an emergency.

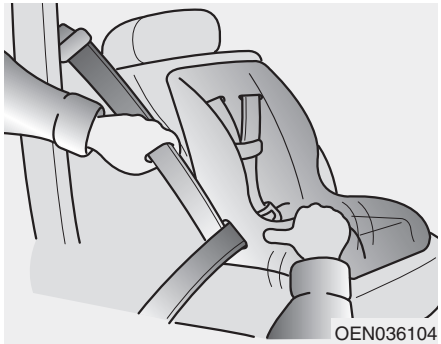
OEN036104

3. Buckle the seat belt and allow the seat belt to take up any slack. After installation of the child restraint system, try to move it in all directions to be sure the child restraint system is securely installed.

If you need to tighten the belt, pull more webbing toward the retractor. When you unbuckle the seat belt and allow it to retract, the retractor will automatically revert back to its normal seated passenger emergency locking usage condition.

Child seat restraint suitability for seat position using the seat belt - For Europe

Use child safety seats that have been officially approved and are appropriate for your children. When using the child safety seats, refer to the following table.

Age group	Seating position			
	Front Passenger	Rear left	Rear Center	Rear right
0 : Up to 10 kg (0 - 9 months)	X	U	X	U
0+ : Up to 13 kg (0 - 2 years)	X	U	X	U
I : 9 kg to 18 kg (9 months - 4 years)	X	U	X	U
II & III : 15 kg to 36 kg (4 - 12 years)	X	UF	X	UF

U : Suitable for "universal" category restraints approved for use in this mass group

UF : Suitable for forward-facing "universal" category restraints approved for use in this mass group

X : Seat position not suitable for children in this mass group

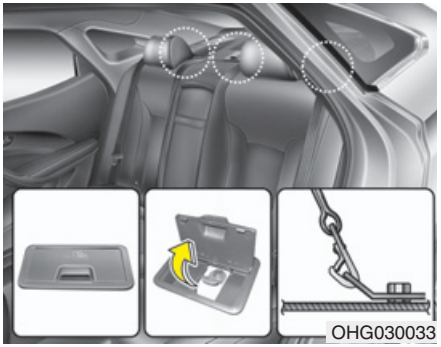

Securing a child restraint seat with "Tether Anchor" system (if equipped)

Child restraint hook holders are located on the package tray.

OHG030034

1. Route the child restraint seat tether strap over the seatback.

   For vehicles with adjustable headrests, route the tether strap under the headrest and between the headrest posts, otherwise route the tether strap over the top of the seatback.
2. Connect the tether strap hook to the appropriate child restraint hook holder and tighten to secure the seat.

⚠ WARNING

A child can be seriously injured or killed in a collision if the child restraint is not properly anchored to the car and the child is not properly restrained in the child restraint. Always follow the child seat manufacturer's instructions for installation and use.

⚠ WARNING - Tether strap

Never mount more than one child restraint to a single tether anchor or to a single lower anchorage point. The increased load caused by multiple seats may cause the tether anchor or lower anchorage points to break, causing serious injury or death.

⚠ WARNING - Child restraint check

Check that the child restraint system is secure by pushing and pulling it in different directions. Incorrectly fitted child restraints may swing, twist, tip or separate causing death or serious injury.

⚠ WARNING - Child restraint anchorage

- **Child restraint anchorages are designed to withstand only those loads imposed by correctly fitted child restraints. Under no circumstances are they to be used for adult seat belts or harnesses or for attaching other items or equipment to the vehicle.**
- **The tether strap may not work properly if attached somewhere other than the correct tether anchor.**

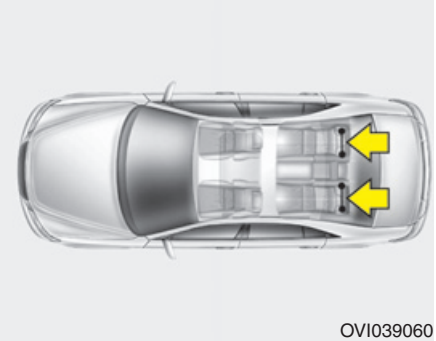

Securing a child restraint system with "ISOFIX" system and "Tether Anchorage" system (if equipped)

ISOFIX is a standardised method of fitting child seats that eliminates the need to use the standard adult seat belt to secure the seat in the vehicle. This enables a much more secure and positive location with the added benefit of easier and quicker installation.

An ISOFIX-seat can only be installed if it has vehicle-specific approval in accordance with the requirements of ECE-R44.

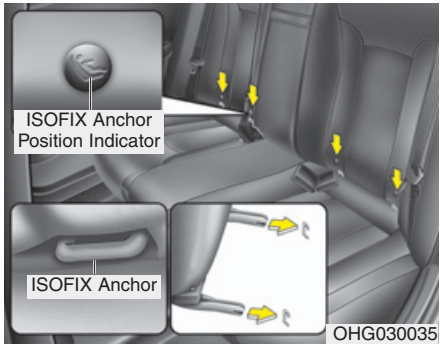

There are ISOFIX symbols located on the lower portion of each side of the rear seatbacks. These symbols indicate the position of the lower anchors for child restraints so equipped.

Both rear outboard seats are equipped with a pair of ISOFIX anchorages as well as a corresponding top tether anchorage on the shelf behind the rear seats. The ISOFIX anchorages are located between seat cushion and backrest, marked with the ISOFIX icon.

For installation, CRS ISOFIX connecters have to engage with the vehicles ISOFIX anchorages (listen for a CLICK, check potential visual indicators on the CRS and cross-check by pulling).

CRS with universal approval to ECE-R 44 need to be fixed additionally with a top tether strap connected to the corresponding top tether anchorage point on the shelf behind the rear seats.

The installing and the use of a child-seat has to be done according to the installing-manual, which is added to the ISOFIX-seat.

⚠ WARNING

- **When using the vehicle's "ISOFIX" system to install a child restraint system in the rear seat, all unused vehicle rear seat belt metal latch plates or tabs must be latched securely in their seat belt buckles and the seat belt webbing must be retracted behind the child restraint to prevent the child from reaching and taking hold of unretracted seat belts. Unlatched metal latch plates or tabs may allow the child to reach the unretracted seat belts which may result in strangulation and a serious injury or death to the child in the child restraint.**
- **Do not place anything around the lower anchors. Also make sure that the seat belt is not caught in the lower anchors.**

To secure the child restraint seat

1. To engage the child restraint seat to the ISOFIX anchor, insert the child restraint seat latch into the ISOFIX anchor. Listen for the audible “click” sound.

⚠ CAUTION

Do not allow the rear seat belt webbing to get scratched or pinched by the ISOFIX-seat latch and ISOFIX anchor during installation.

2. Connect the tether strap hook to the child restraint hook holder and tighten to secure the seat. (Refer to the previous page.)

⚠ WARNING

- **Do not install a child restraint seat at the center of the rear seat using the vehicle's ISOFIX anchors. The ISOFIX anchors are only provided for the left and right outboard rear seating positions. Do not misuse the ISOFIX anchors by attempting to attach a child restraint seat in the middle of the rear seat to the ISOFIX anchors.**

  In a crash, the child restraint seat ISOFIX attachments may not be strong enough to secure the child restraint seat properly in the center of the rear seat and may break, causing serious injury or death.

(Continued)

(Continued)

- **Do not mount more than one child restraint to a child restraint lower anchorage point. The improper increased load may cause the anchorage points or tether anchor to break, causing serious injury or death.**
- **Attach the ISOFIX or ISOFIX-compatible child restraint seat only to the appropriate locations shown in the illustration.**
- **Always follow the installation and use instructions provided by the manufacturer of the child restraint.**

Child seat restraint suitability for vehicle ISOFIX positions- For Europe

Mass Group	Size Class	Fixture	Vehicle ISOFIX positions			
			Front Passenger	Rear Outboard (Driver side)	Rear Outboard (Passenger side)	Rear Center
Carrycot	F	ISO/L1	-	X	X	-
	G	ISO/L2	-	X	X	-
0 : UP to 10kg	E	ISO/R1	-	IUF	IUF	-
0+ : UP to 13kg	E	ISO/R1	-	IUF	IUF	-
	D	ISO/R2	-	IUF	IUF	-
	C	ISO/R3	-	IUF	IUF	-
I : 9 to 18kg	D	ISO/R2	-	IUF	IUF	-
	C	ISO/R3	-	IUF	IUF	-
	B	ISO/F2	-	IUF	IUF	-
	B1	ISO/F2X	-	IUF	IUF	-
	A	ISO/F3	-	IUF	IUF	-

IUF = Suitable for ISOFIX forward child restraints systems of universal category approved for use in the mass group.

X = ISOFIX position not suitable for ISOFIX child restraint system in this mass group and/or this size class.

* Both ISO/R2 and ISO/R3 are able to be set up only at the foremost position of the passenger seat.

* ISOFIX child restraint system size classes and fixtures

A - ISO/F3: Full-Height Forward-Facing toddler CRS (height 720mm)

B - ISO/F2: Reduced-Height Forward-Facing toddler CRS (height 650mm)

B1 - ISO/F2X: Reduced-Height Second Version Back Surface Shape Forward-Facing toddler CRS (height 650mm)

C - ISO/R3: Full-Size Rearward-Facing toddler CRS

D - ISO/R2: Reduced-Size Rearward-Facing toddler CRS

E - ISO/R1: Infant-Size Rearward-Facing CRS

F - ISO/L1: Left Lateral Facing position CRS (carry-cot)

G - ISO/L2: Right Lateral Facing position CRS (carry-cot)

AIR BAG - SUPPLEMENTAL RESTRAINT SYSTEM (SRS)

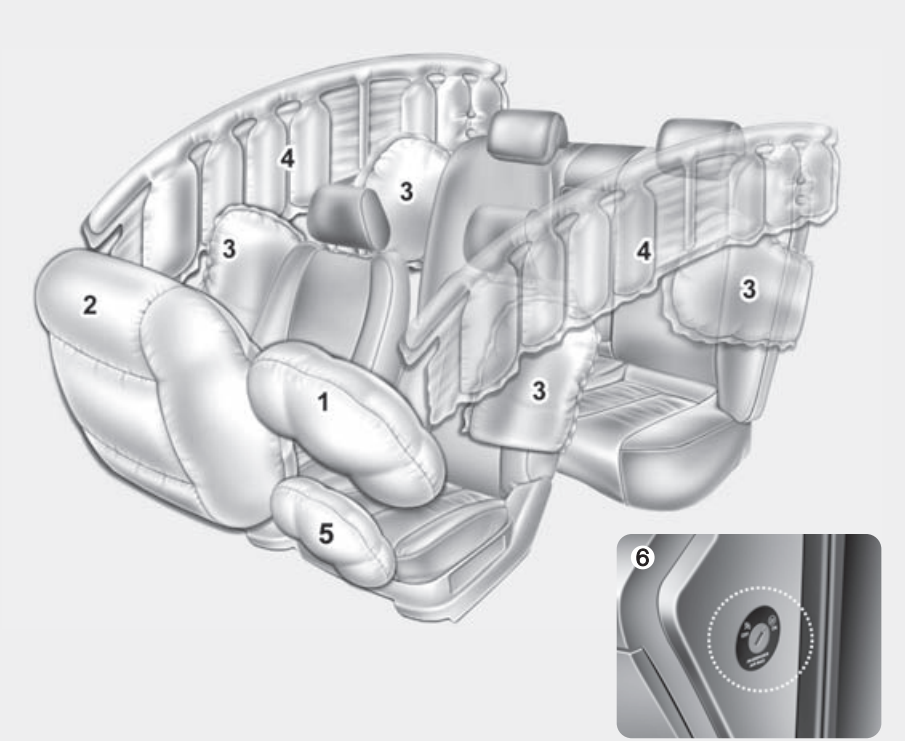

❊ The actual air bags in the vehicle may differ from the illustration.

OHG030036/OHG030066L

(1) Driver's front air bag
(2) Passenger's front air bag
(3) Side impact air bag*
(4) Curtain air bag*
(5) Driver's knee air bag*
(6) Passenger's front air bag ON/OFF switch*

* : if equipped

⚠ WARNING

- **Even in vehicles with air bags, you and your passengers must always wear the safety belts provided in order to minimize the risk and severity of injury in the event of a collision or rollover.**
- **SRS and pre-tensioners contain explosive chemicals.**

  If scraping a vehicle without removing SRS and pre-tensioners from a vehicle, it may cause fire. Before scraping a vehicle, we recommend that you contact an authorized HYUNDAI dealer.
- **Keep the SRS parts and wirings away from water or any liquid. If the SRS components are inoperative due to exposure to water or liquids, it may cause fire or severe injury.**

How does the air bag system operate

- Air bags are activated (able to inflate if necessary) only when the ignition switch is turned to the ON or START position.
- Air bags inflate instantly in the event of a serious frontal or side collision (if equipped with side air bag or curtain air bag) in order to help protect the occupants from serious physical injury.
- There is no single speed at which the air bags will inflate.

  Generally, air bags are designed to inflate based upon the severity of a collision and its direction. These two factors determine whether the sensors produce an electronic deployment/ inflation signal.
- Air bag deployment depends on a number of factors including vehicle speed, angles of impact and the density and stiffness of the vehicles or objects which your vehicle hits in the collision. The determining factors are not limited to those mentioned above.
- The front air bags will completely inflate and deflate in an instant.

  It is virtually impossible for you to see the air bags inflate during an accident.

  It is much more likely that you will simply see the deflated air bags hanging out of their storage compartments after the collision.
- In order to help provide protection in a severe collision, the air bags must inflate rapidly. The speed of air bag inflation is a consequence of the extremely short time in which a collision occurs and the need to inflate the air bag between the occupant and the vehicle structures before the occupant impacts those structures. This speed of inflation reduces the risk of serious or life-threatening injuries in a severe collision and is thus a necessary part of air bag design.

  However, air bag inflation can also cause injuries which can include facial abrasions, bruises and broken bones because the inflation speed also causes the air bags to expand with a great deal of force.
- **There are even circumstances under which contact with the steering wheel air bag can cause fatal injuries, especially if the occupant is positioned excessively close to the steering wheel.**

⚠ WARNING

- **To avoid severe personal injury or death caused by deploying air bags in a collision, the driver should sit as far back from the steering wheel air bag as possible (at least 250 mm (10 inches) away). The front passengers should always move their seats as far back as possible and sit back in their seat.**
- **Air bags inflate instantly in the event of collision, and passengers may be injured by the air bag expansion force if they are not in proper position.**
- **Air bag inflation may cause injuries including facial or bodily abrasions, injuries from broken glasses or burns.**

Noise and smoke

When the air bags inflate, they make a loud noise and they leave smoke and powder in the air inside of the vehicle. This is normal and is a result of the ignition of the air bag inflator. After the air bag inflates, you may feel substantial discomfort in breathing due to the contact of your chest with both the seat belt and the air bag, as well as from breathing the smoke and powder. **Open your doors and/or windows as soon as possible after impact in order to reduce discomfort and prevent prolonged exposure to the smoke and powder.**

Though the smoke and powder are non-toxic, they may cause irritation to the skin (eyes, nose and throat, etc). If this is the case, wash and rinse with cold water immediately and consult a doctor if the symptom persists.

⚠ WARNING

When the air bags deploy, the air bag related parts in the steering wheel and/or instrument panel and/or in both sides of the roof rails above the front and rear doors are very hot. To prevent injury, do not touch the air bag storage area's internal components immediately after an air bag has inflated.

■ Type A

1JBH3051

■ Type B

OYDESA2042

■ Type C

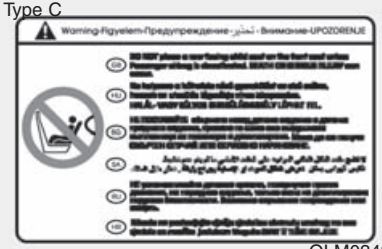

OLM034310

Do not install a child restraint on the front passenger seat

Never place a rear-facing child restraint in the front passenger's seat. If the air bag deploys, it would impact the rear-facing child restraint, causing serious or fatal injury.

In addition, do not place front-facing child restraints in the front passenger's seat either. If the front passenger air bag inflates, it would cause serious or fatal injuries to the child.

If your vehicle is equipped with the passenger's front air bag ON/OFF switch, you can activate or deactivate the front passenger's air bag when necessary.

For more details, please refer to 3-48 page.

⚠ WARNING

- **NEVER use a rearward facing child restraint on a seat protected by an ACTIVE AIRBAG in front of it, DEATH or SERIOUS INJURY to the CHILD can occur.**
- **Never put a child restraint in the front passenger's seat. If the front passenger air bag inflates, it can cause serious or fatal injuries.**
- **When children are seated in the rear outboard seats of a vehicle equipped with side and/or curtain air bags, be sure to install the child restraint system as far away from the door side as possible, and securely lock the child restraint system in position.**

  Inflation of side and/or curtain air bags could cause serious injury or death to an infant or child.

W7-147

Air bag warning indicator

Air bag warning light

The purpose of the air bag warning light in your instrument panel is to alert you of a potential problem with your air bag - Supplemental Restraint System (SRS). When the ignition switch is turned ON, the warning light should illuminate for approximately 6 seconds, then go off. Have the system checked if:

- The light does not turn on briefly when you turn the ignition ON.
- The light stays on after illuminating for approximately 6 seconds.
- The light comes on while the vehicle is in motion.
- The light blinks when the ignition switch is in ON position.

⚠ CAUTION

If the passenger's front air bag ON/OFF switch malfunctions, the passenger's front air bag OFF indicator will not illuminate (The passenger's front air bag ON indicator comes on and goes off after approximately 60 seconds) and the passenger's front air bag will inflate in a frontal impact even if the passenger's front air bag ON/OFF switch is set to the OFF position.

If this occurs, have an authorized HYUNDAI dealer inspect the passenger's front air bag ON/OFF switch and the SRS air bag system as soon as possible.

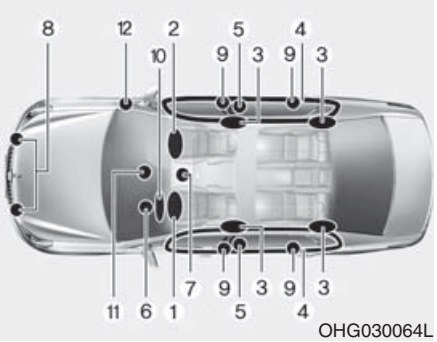

OHG030064L

SRS components and functions

The SRS consists of the following components:

1. Driver's front air bag module
2. Passenger's front air bag module
3. Side impact air bag modules*
4. Curtain air bag modules*
5. Retractor pre-tensioner assemblies
6. Air bag warning light
7. SRS control module (SRSCM)
8. Front impact sensors
9. Side impact sensors*
10. Driver’s knee air bag module
11. Passenger’s front air bag ON/OFF indicator* (front passenger's seat only)
12. Passenger’s front air bag ON/OFF switch* (front passenger's seat only)

*: if equipped

The SRSCM continually monitors all SRS components while the ignition switch is ON to determine if a crash impact is severe enough to require air bag deployment or pre-tensioner seat belt deployment.

The SRS air bag warning light "" on the instrument panel will illuminate for about 6 seconds after the ignition switch is turned to the ON position, after which the SRS air bag warning light "" should go out.

⚠ WARNING

If any of the following conditions occurs, this indicates a malfunction of the SRS. Have an authorized HYUNDAI dealer inspect the air bag system as soon as possible.

- **The light does not turn on briefly when you turn the ignition ON.**
- **The light stays on after illuminating for approximately 6 seconds.**
- **The light comes on while the vehicle is in motion.**
- **The light blinks when the ignition switch is in ON position.**

Driver's front air bag (1)

The front air bag modules are located both in the center of the steering wheel, in the front passenger's panel above the glove box and/or in the driver's side knee bolster. When the SRSCM detects a sufficiently severe impact to the front of the vehicle, it will automatically deploy the front air bags.

Driver's front air bag (2)

Upon deployment, tear seams molded directly into the pad covers will separate under pressure from the expansion of the air bags. Further opening of the covers then allows full inflation of the air bags.

Driver's front air bag (3)

A fully inflated air bag, in combination with a properly worn seat belt, slows the driver's or the passenger's forward motion, reducing the risk of head and chest injury.

After complete inflation, the air bag immediately starts deflating, enabling the driver to maintain forward visibility and the ability to steer or operate other controls.

Passenger's front air bag

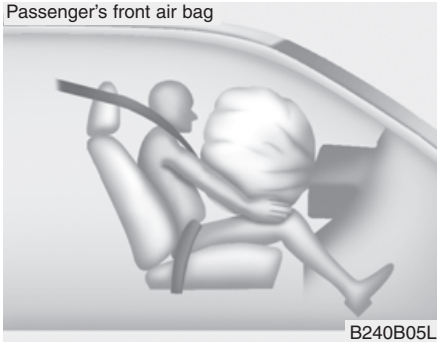

B240B05L

⚠ WARNING

- **Do not install or place any accessories (drink holder, cassette holder, sticker, etc.) on the front passenger's panel above the glove box in a vehicle with a passenger's air bag. Such objects may become dangerous projectiles and cause injury if the passenger's air bag inflates.**
- **When installing a container of liquid air freshener inside the vehicle, do not place it near the instrument cluster nor on the instrument panel surface.**

  It may become a dangerous projectile and cause injury if the passenger's air bag inflates.

⚠ WARNING

- **If an air bag deploys, there may be a loud noise followed by a fine dust released in the vehicle. These conditions are normal and are not hazardous - the air bags are packed in this fine powder. The dust generated during air bag deployment may cause skin or eye irritation as well as aggravate asthma for some persons. Always wash all exposed skin areas thoroughly with lukewarm water and a mild soap after an accident in which the air bags were deployed.**
- **The SRS can function only when the ignition switch is in the ON position. If the SRS " " warning light does not illuminate, or continuously remains on after illuminating for about 6 seconds when the ignition switch is turned to the ON position, or after the engine is started, comes on while driving, the SRS is not working properly. If this occurs, have your vehicle immediately inspected by an authorized HYUNDAI dealer.**

(Continued)

(Continued)

- **Before you replace a fuse or disconnect a battery terminal, turn the ignition switch to the LOCK position and remove the ignition key. Never remove or replace the air bag related fuse(s) when the ignition switch is in the ON position. Failure to heed this warning will cause the SRS " " warning light to illuminate.**

■ Driver's front air bag

OHG030037

■ Driver's knee air bag

OHG030038

Driver's and passenger's front air bag

Your vehicle is equipped with a Supplemental Restraint (Air Bag) System and the lap/shoulder belts at both the driver and passenger seating positions.

The indications of the system's presence are the letters "SRS AIR BAG" or "AIR BAG" embossed on the air bag pad cover in the steering wheel and/or on the cover of the driver's side knee bolster located below the steering wheel and the passenger's side front panel pad above the glove box.

The SRS consists of air bags installed under the pad covers in the center of the steering wheel and the passenger's side front panel above the glove box.

■ Passenger's front air bag

• Type A

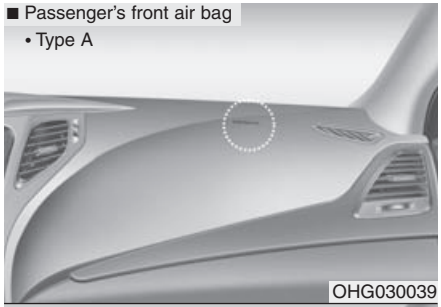

OHG030039

• Type B

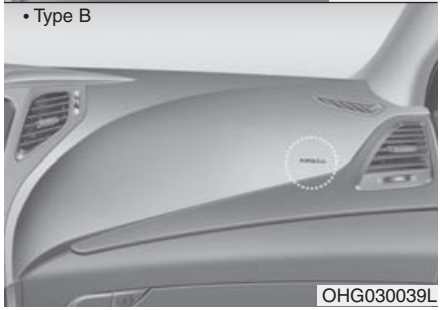

OHG030039L

The purpose of the SRS is to provide the vehicle's driver and/or the front passenger with additional protection than that offered by the seat belt system alone in case of a frontal impact of sufficient severity.

⚠ WARNING

Always use seat belts and child restraints – every trip, every time, everyone! Air bags inflate with considerable force and in the blink of an eye. Seat belts help keep occupants in proper position to obtain maximum benefit from the air bag. Even with air bags, improperly belted and unbelted occupants can be severely injured when the air bag inflates. Always follow the precautions about seat belts, air bags and occupant safety contained in this manual.

To reduce the chance of serious or fatal injuries and receive the maximum safety benefit from your restraint system:

- **Never place a child in any child or booster seat in the front seat.**
- **ABC – Always Buckle Children in the back seat. It is the safest place for children of any age to ride.**
- **Front and side impact air bags can injure occupants improperly positioned in the front seats.**

(Continued)

(Continued)

- **Move your seat as far back as possible from the front air bags, while still maintaining control of the vehicle.**
- **You and your passengers should never sit or lean unnecessarily close to the air bags. Improperly positioned drivers and passengers can be severely injured by inflating air bags.**
- **Never lean against the door or center console – always sit in an upright position.**
- **Do not allow a passenger to ride in the front seat when the passenger's front air bag OFF indicator (if equipped) is illuminated, because the air bag will not deploy in the event of a moderate or severe frontal crash.**
- **No objects should be placed over or near the air bag modules on the steering wheel, instrument panel, driver's side knee bolster, and the front passenger's panel above the glove box, because any such object could cause harm if the vehicle is in a crash severe enough to cause the air bags to deploy.**

(Continued)

(Continued)

- **Do not tamper with or disconnect SRS wiring or other components of the SRS system. Doing so could result in injury, due to accidental deployment of the air bags or by rendering the SRS inoperative.**
- **If the SRS air bag warning light "🪑"remains illuminated while the vehicle is being driven, have an authorized HYUNDAI dealer inspect the air bag system as soon as possible.**
- **Air bags can only be used once – have an authorized HYUNDAI dealer replace the air bag immediately after deployment.**
- **The SRS is designed to deploy the front air bags only when an impact is sufficiently severe and when the impact angle is less than 30° from the forward longitudinal axis of the vehicle. Additionally, the air bags will only deploy once. Seat belts must be worn at all times.**

(Continued)

(Continued)

- **Front air bags are not intended to deploy in side-impact, rear-impact or rollover crashes. In addition, front air bags will not deploy in frontal crashes below the deployment threshold.**
- **A child restraint system must never be placed in the front seat. The infant or child could be severely injured or killed by an air bag deployment in case of an accident.**
- **Children age 12 and under must always be properly restrained in the rear seat. Never allow children to ride in the front passenger seat. If a child over 12 must be seated in the front seat, he or she must be properly belted and the seat should be moved as far back as possible.**

(Continued)

(Continued)

- **For maximum safety protection in all types of crashes, all occupants including the driver should always wear their seat belts whether or not an air bag is also provided at their seating position to minimize the risk of severe injury or death in the event of a crash. Do not sit or lean unnecessarily close to the air bag while the vehicle is in motion.**
- **Sitting improperly or out of position can result in serious or fatal injury in a crash. All occupants should sit upright with the seat back in an upright position, centered on the seat cushion with their seat belt on, legs comfortably extended and their feet on the floor until the vehicle is parked and the ignition key is removed.**
- **The SRS air bag system must deploy very rapidly to provide protection in a crash. If an occupant is out of position because of not wearing a seat belt, the air bag may forcefully contact the occupant causing serious or fatal injuries.**

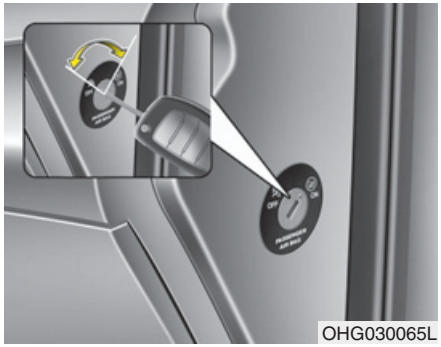

OHG030065L

Passenger air bag "ON/OFF" switch (if equipped)

The passenger's front air bag can be deactivated by the passenger's front air bag ON/OFF switch if a child restraint is installed on the front passenger's seat or if the front passenger's seat is unoccupied by a person.

To ensure the safety of your child, the passenger's front air bag must be deactivated when it should be necessary to install a rearward facing child seat on the front passenger seat in exceptional circumstances.

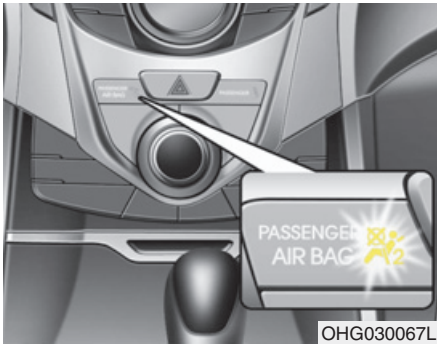

OHG030067L

To deactivate or reactivate the passenger's front air bag:

To deactivate the passenger's front air bag, insert the master key into the passenger's front air bag ON/OFF switch and turn it to the OFF position. The passenger's front air bag OFF indicator ( ) will illuminate and stay on until the passenger's front air bag is reactivated.

To reactivate the passenger's front air bag, insert the master key into the passenger's front air bag ON/OFF switch and turn it to the ON position. The passenger's front air bag OFF indicator will go out.

⚠ WARNING

On some models, the front air bag ON/OFF switch could turn by using a similar small rigid device. Always check the status of the front air bag ON/OFF switch and passenger's front air bag ON/OFF indicator.

✻ NOTICE

- **When the passenger's front air bag ON/OFF switch is set to the ON position, the passenger's front air bag is activated and child or infant seat should not be installed on the front passenger seat.**
- **When the passenger's front air bag ON/OFF switch is set to the OFF position, the passenger's front air bag is deactivated.**

⚠ CAUTION

- ***If the passenger's front air bag ON/OFF switch is not working properly, the air bag warning light ( ) on the instrument panel will illuminate.***

  And, the passenger's front air bag OFF indicator ( ) will not illuminate, the SRS Control Module reactivates the passenger's front air bag and the passenger's front air bag will inflate in frontal impact crashes even if the passenger's front air bag ON/OFF switch is set to the OFF position.

  If this occurs, have an authorized HYUNDAI dealer inspect the passenger's front air bag ON/OFF switch, the pre-tensioner seat belt system and the SRS air bag system as soon as possible.

(Continued)

(Continued)

- *If the SRS air bag warning light blinks or does not illuminate when the ignition switch is turned to the ON position, or if it illuminates while the vehicle is being driven, have an authorized HYUNDAI dealer inspect the passenger's front air bag ON/OFF switch, pre-tensioner seat belt and the SRS air bag system as soon as possible.*

⚠ WARNING

- **The driver is responsible for the proper position of the passenger's front air bag ON/OFF switch.**
- **Deactivate the passenger's front air bag only when the ignition switch is switched off, or the malfunction may occur in the SRS Control Module.**

  And there may be a danger that the driver's and/or front passenger's and/or side and curtain air bag may fail to trigger, or not trigger correctly during a collision.
- **Never install a rearward facing child seat on the front passenger's seat unless the passenger's front air bag has been deactivated. The infant or child could be severely injured or killed by an air bag deployment in case of an accident.**

(Continued)

(Continued)

- **Even though your vehicle is equipped with the passenger's front air bag ON/OFF switch, do not install a child restraint system in the front passenger's seat. A child restraint system must never be placed in the front seat. Children who are too large for child restraint systems should always occupy the rear seat and use the available lap/shoulder belts. Children are afforded the most safety in the event of an accident when they are restrained by a proper restraint system in the rear seat.**
- **As soon as the child seat is no longer needed on the front passenger's seat, reactivate the front passenger's air bag.**

■ Front

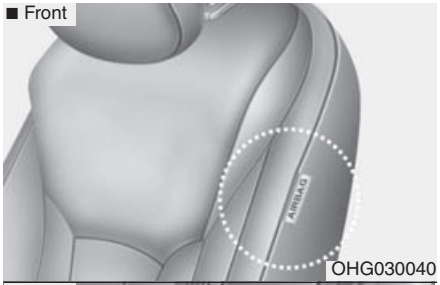

OHG030040

■ Rear

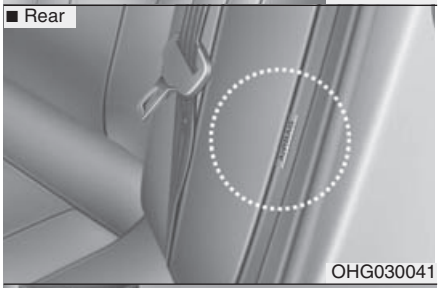

OHG030041

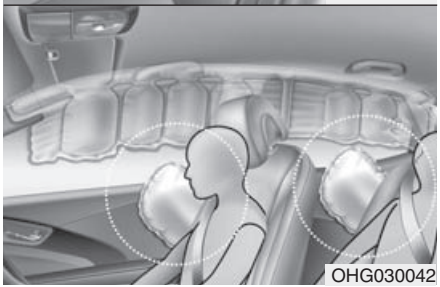

OHG030042

Side impact air bag (if equipped)

Your vehicle is equipped with a side impact air bag in each front and/or outboard rear seat. The purpose of the air bag is to provide the vehicle's driver, front passenger and/or outboard rear passengers with additional protection than that offered by the seat belt alone.

- The side impact air bags are designed to deploy only during certain side-impact collisions, depending on the crash severity, angle, speed and point of impact.
- The side impact air bags are not designed to deploy in all side impact situations.

⚠ WARNING

Do not allow the passengers to lean their heads or bodies onto doors, put their arms on the doors, stretch their arms out of the window, or place objects between the doors and passengers when they are seated on seats equipped with side and/or curtain air bags.

⚠ WARNING

- **The side impact air bag is supplemental to the seat belt systems and is not a substitute for them. Therefore your seat belts must be worn at all times while the vehicle is in motion. The air bags deploy only in certain side impact conditions severe enough to cause significant injury to the vehicle occupants.**
- **For best protection from the side impact air bag system and to avoid being injured by the deploying side impact air bag, both front and all rear (if equipped) seat occupants should sit in an upright position with the seat belt properly fastened. The driver's hands should be placed on the steering wheel at the 9:00 and 3:00 positions. The passenger' arms and hands should be placed on their laps.**
- **Do not use any accessory seat covers.**

(Continued)

(Continued)

- **Use of seat covers could reduce or prevent the effectiveness of the system.**
- **Do not install any accessories on the side or near the side impact air bag.**
- **Do not place any objects over the air bag or between the air bag and yourself.**
- **Do not place any objects (an umbrella, bag, etc.) between the front door and the front seat. Such objects may become dangerous projectiles and cause injury if the supplemental side impact air bag inflates.**
- **To prevent unexpected deployment of the side impact air bag that may result in personal injury, avoid impact to the side impact sensor when the ignition switch is on.**
- **If the seat or seat cover is damaged, have the vehicle checked and repaired by an authorized HYUNDAI dealer because your vehicle is equipped with side impact air bags.**

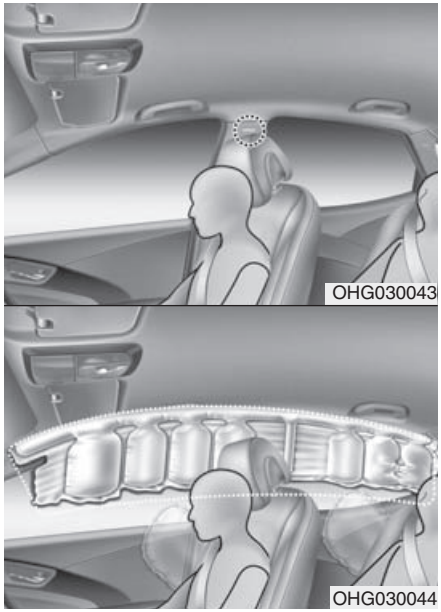

Curtain air bag (if equipped)

Curtain air bags are located along both sides of the roof rails above the front and rear doors.
They are designed to help protect the heads of the front seat occupants and the rear outboard seat occupants in certain side impact collisions.

The curtain air bags are designed to deploy only during certain side impact collisions, depending on the crash severity, angle, speed and impact. The curtain air bags are not designed to deploy in all side impact situations, collisions from the front or rear of the vehicle or in most rollover situations.

⚠ WARNING

- **In order for side and curtain air bags to provide the best protection, front seat occupants and outboard rear occupants should sit in an upright position with the seat belts properly fastened. Importantly, children should sit in a proper child restraint system in the rear seat.**
- **When children are seated in the rear outboard seats, they must be seated in the proper child restraint system. Make sure to position the child restraint system as far away from the door side as possible, and secure the child restraint system in a locked position.**

(Continued)

(Continued)

- **Do not allow the passengers to lean their heads or bodies onto doors, put their arms on the doors, stretch their arms out of the window, or place objects between the doors and passengers when they are seated on seats equipped with side and/or curtain air bags.**
- **Never try to open or repair any components of the side curtain air bag system. This should only be done by an authorized HYUNDAI dealer.**

Failure to follow the above instructions can result in injury or death to the vehicle occupants in an accident.

Why didn't my air bag go off in a collision? (Inflation and non-inflation conditions of the air bag)

There are many types of accidents in which the air bag would not be expected to provide additional protection.

These include rear impacts, second or third collisions in multiple impact accidents, as well as low speed impacts.

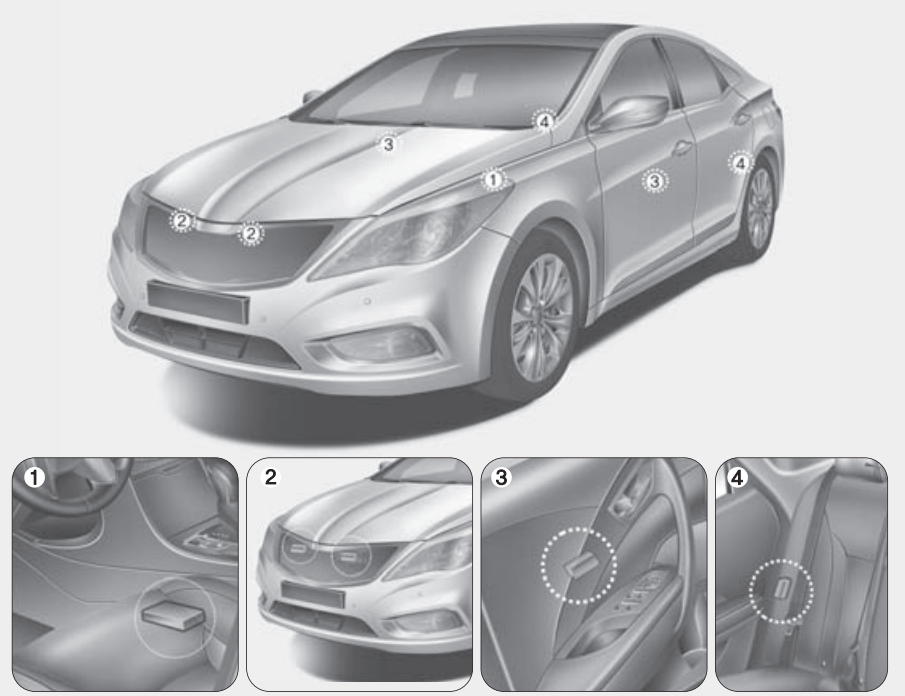

OHG030045/OHG030046/OHG030047/OHG030048/OHG030049

Air bag collision sensors

(1) SRS control module
(2) Front impact sensor
(3) Side impact sensor (front)*
(4) Side impact sensor (rear)*

* : if equipped

⚠ WARNING

- **Do not hit or allow any objects to impact the locations where air bags or sensors are installed.**

  This may cause unexpected air bag deployment, which could result in serious personal injury or death.
- **If the installation location or angle of the sensors is altered in any way, the air bags may deploy when they should not or they may not deploy when they should, causing severe injury or death.**

  Therefore, do not try to perform maintenance on or around the air bag sensors. Have the vehicle checked and repaired by an authorized HYUNDAI dealer.

(Continued)

(Continued)

- **Problems may arise if the sensor installation angles are changed due to the deformation of the front bumper, body or B and C pillars where side collision sensors are installed. Have the vehicle checked and repaired by an authorized HYUNDAI dealer.**
- **Your vehicle has been designed to absorb impact and deploy the air bag(s) in certain collisions. Installing bumper guards or replacing a bumper with non-genuine parts may adversely affect your vehicle's collision and air bag deployment performance.**

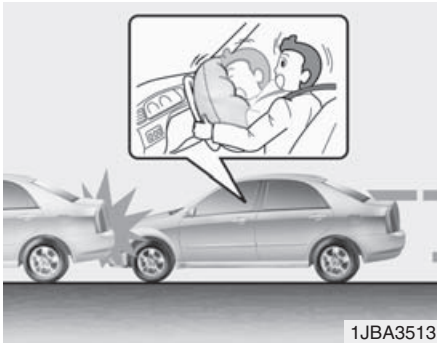

Air bag inflation conditions

Front air bags

Front air bags are designed to inflate in a frontal collision depending on the intensity, speed or angles of impact of the front collision.

1JBA3514

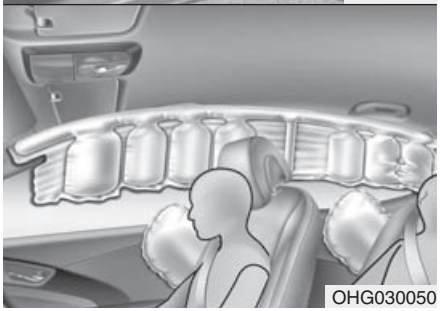

OHG030050

Side impact and curtain air bags (if equipped)

Side impact and curtain air bags are designed to inflate when an impact is detected by side collision sensors depending on the strength, speed or angles of impact resulting from a side impact collision.

Although the front air bags (driver's and front passenger's air bags) are designed to inflate only in frontal collisions, they also may inflate in other types of collisions if the front impact sensors detect a sufficient impact. Side impact and curtain air bags are designed to inflate only in side impact collisions, but they may inflate in other collisions if the side impact sensors detect a sufficient impact.

If the vehicle chassis is impacted by bumps or objects on unimproved roads, the air bags may deploy. Drive carefully on unimproved roads or on surfaces not designed for vehicle traffic to prevent unintended air bag deployment.

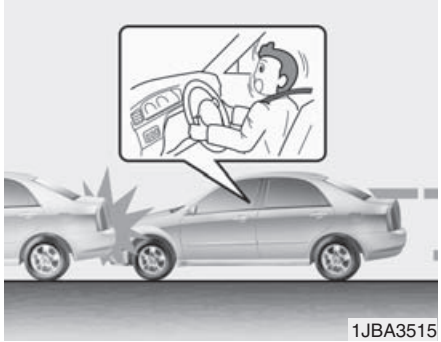

1JBA3515

Air bag non-inflation conditions

- In certain low-speed collisions the air bags may not deploy. The air bags are designed not to deploy in such cases because they may not provide benefits beyond the protection of the seat belts in such collisions.

OBH038058

- Frontal air bags are not designed to inflate in rear collisions, because occupants are moved backward by the force of the impact. In this case, inflated air bags would not be able to provide any additional benefit.

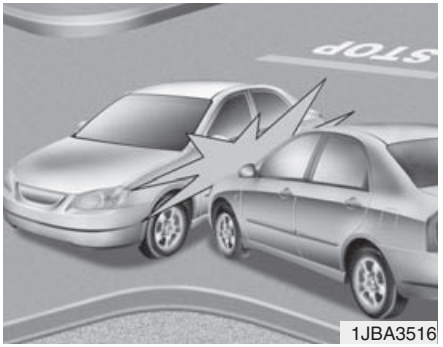

1JBA3516

- Front air bags may not inflate in side impact collisions, because occupants move to the direction of the collision, and thus in side impacts, frontal air bag deployment would not provide additional occupant protection.

  However, side impact and curtain air bags may inflate depending on the intensity, vehicle speed and angles of impact.

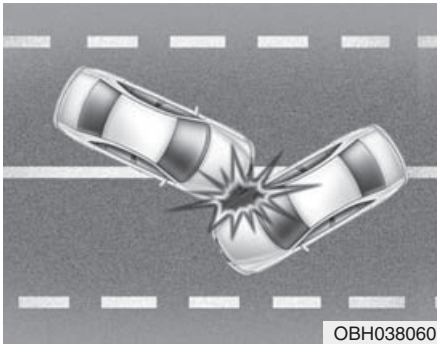
OBH038060

- In an angled collision, the force of impact may direct the occupants in a direction where the air bags would not be able to provide any additional benefit, and thus the sensors may not deploy any air bags.

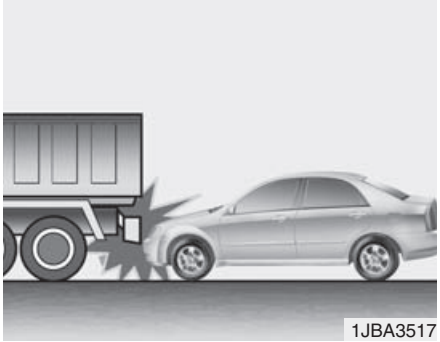
1JBA3517

- Just before impact, drivers often brake heavily. Such heavy braking lowers the front portion of the vehicle causing it to “ride” under a vehicle with a higher ground clearance. Air bags may not inflate in this "under-ride" situation because deceleration forces that are detected by sensors may be significantly reduced by such “under-ride” collisions.

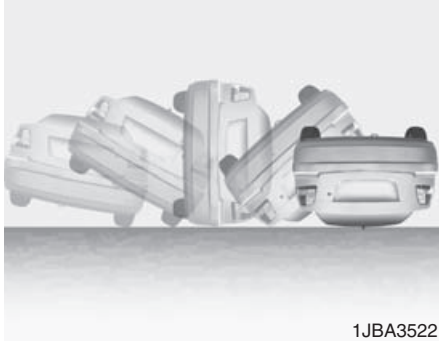
1JBA3522

- Air bags may not inflate in rollover accidents because air bag deployment would not provide protection to the occupants.

  However, side impact and curtain air bags may inflate when the vehicle is rolled over by a side impact collision, if the vehicle is equipped with side impact air bags and curtain air bags.

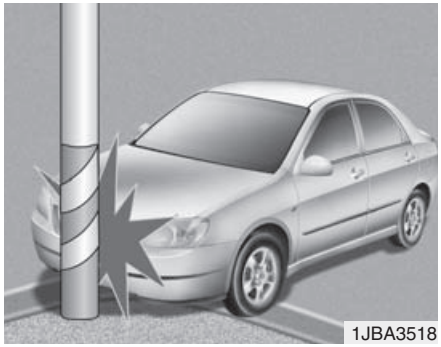
1JBA3518

- Air bags may not inflate if the vehicle collides with objects such as utility poles or trees, where the point of impact is concentrated to one area and the full force of the impact is not delivered to the sensors.

SRS Care

The SRS is virtually maintenance-free and so there are no parts you can safely service by yourself. If the SRS air bag warning light does not illuminate when you turn the ignition ON, or if it continuously remains on, have your vehicle immediately inspected by an authorized HYUNDAI dealer.

Any work on the SRS system, such as removing, installing, repairing, or any work on the steering wheel, the front passenger's panel, front seats and roof rails must be performed by an authorized HYUNDAI dealer. Improper handling of the SRS system may result in serious personal injury.

⚠ WARNING

- **Modification to SRS components or wiring, including the addition of any kind of badges to the pad covers or modifications to the body structure, can adversely affect SRS performance and lead to possible injury.**
- **For cleaning the air bag pad covers, use only a soft, dry cloth or one which has been moistened with plain water. Solvents or cleaners could adversely affect the air bag covers and proper deployment of the system.**
- **No objects should be placed over or near the air bag modules on the steering wheel, instrument panel, and the front passenger's panel above the glove box, because any such object could cause harm if the vehicle is in a crash severe enough to cause the air bags to inflate.**

(Continued)

(Continued)

- **If the air bags inflate, they must be replaced by an authorized HYUNDAI dealer.**
- **Do not tamper with or disconnect SRS wiring, or other components of the SRS system. Doing so could result in injury, due to accidental inflation of the air bags or by rendering the SRS inoperative.**
- **If components of the air bag system must be discarded, or if the vehicle must be scrapped, certain safety precautions must be observed. An authorized HYUNDAI dealer knows these precautions and can give you the necessary information. Failure to follow these precautions and procedures could increase the risk of personal injury.**
- **If your car was flooded and has soaked carpeting or water on the flooring, you shouldn't try to start the engine; have the car towed to an authorized HYUNDAI dealer.**

Additional safety precautions

- **Never let passengers ride in the cargo area or on top of a folded-down back seat.** All occupants should sit upright, fully back in their seats with their seat belts on and their feet on the floor.
- **Passengers should not move out of or change seats while the vehicle is moving.** A passenger who is not wearing a seat belt during a crash or emergency stop can be thrown against the inside of the vehicle, against other occupants, or out of the vehicle.
- **Each seat belt is designed to restrain one occupant.** If more than one person uses the same seat belt, they could be seriously injured or killed in a collision.
- **Do not use any accessories on seat belts.** Devices claiming to improve occupant comfort or reposition the seat belt can reduce the protection provided by the seat belt and increase the chance of serious injury in a crash.
- **Passengers should not place hard or sharp objects between themselves and the air bags.** Carrying hard or sharp objects on your lap or in your mouth can result in injuries if an air bag inflates.
- **Keep occupants away from the air bag covers.** All occupants should sit upright, fully back in their seats with their seat belts on and their feet on the floor. If occupants are too close to the air bag covers, they could be injured if the air bags inflate.
- **Do not attach or place objects on or near the air bag covers.** Any object attached to or placed on the front or side air bag covers could interfere with the proper operation of the air bags.
- **Do not modify the front seats.** Modification of the front seats could interfere with the operation of the supplemental restraint system sensing components or side air bags.
- **Do not place items under the front seats.** Placing items under the front seats could interfere with the operation of the supplemental restraint system sensing components and wiring harnesses.
- **Never hold an infant or child on your lap.** The infant or child could be seriously injured or killed in the event of a crash. All infants and children should be properly restrained in appropriate child safety seats or seat belts in the rear seat.

⚠ WARNING

- **Sitting improperly or out of position can cause occupants to be shifted too close to a deploying air bag, strike the interior structure or be thrown from the vehicle resulting in serious injury or death.**
- **Always sit upright with the seatback in an upright position, centered on the seat cushion with your seat belt on, legs comfortably extended and your feet on the floor.**

Adding equipment to or modifying your air bag-equipped vehicle

If you modify your vehicle by changing your vehicle's frame, bumper system, front end or side sheet metal or ride height, this may affect the operation of your vehicle's air bag system.

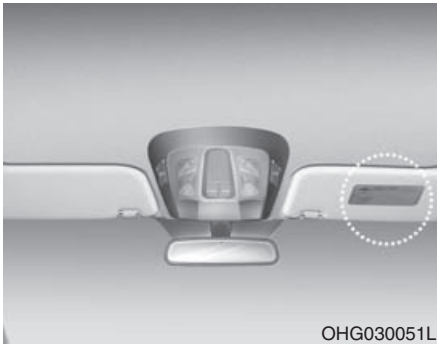
OHG030051L

Air bag warning label

Air bag warning labels are attached to alert the driver and passengers of potential risk of air bag system.

Note that these government warnings focus on the risk of children, we also want you to be aware of the risks which adults are exposed to which have been described in previous pages.

Keys / 4-3
Smart key / 4-7
Remote keyless entry / 4-10
Theft-alarm system / 4-13
Door locks / 4-16
Trunk / 4-20
Windows / 4-22
Hood / 4-26

Features of your vehicle

4

Fuel filler lid / 4-28
Panorama sunroof / 4-31
Driver position memory system / 4-35
Steering wheel / 4-37
Mirrors / 4-40
Instrument cluster / 4-44
Rear parking assist system / 4-68
Parking assist system / 4-72
Rearview camera / 4-76
Hazard warning flasher / 4-76
Lighting / 4-77
Wipers and washers / 4-83
Interior light / 4-86
Welcome system / 4-89
Defroster / 4-90

Manual climate control system / 4-91
Automatic climate control system / 4-101
Windshield defrosting and defogging / 4-113
Storage compartment / 4-117
Interior features / 4-118
Audio system / 4-125

4 Features of your vehicle

KEYS

Record your key number

The key code number is stamped on the key code tag attached to the key set. Should you lose your keys, we recommend that you contact an authorized HYUNDAI dealer. Remove the key code tag and store it in a safe place. Also, record the key code number and keep it in a safe and handy place, but not in the vehicle.

Key operations

- Used to start the engine.
- Used to lock and unlock the doors.
- Used to lock and unlock the glove box.

⚠ WARNING

Use only HYUNDAI original parts for the ignition key in your vehicle. If an aftermarket key is used, the ignition switch may not return to ON after START. If this happens, the starter will continue to operate causing damage to the starter motor and possible fire due to excessive current in the wiring.

⚠ WARNING
- Ignition key (Smart key)

Leaving children unattended in a vehicle with the ignition key (smart key) is dangerous even if the key is not in the ignition switch or the ENGINE START/STOP button is in the ACC or ON position. Children copy adults and they could place the key in the ignition switch or press the ENGINE START/STOP button. The ignition key (smart key) would enable children to operate power windows or other controls, or even make the vehicle move, which could result in serious bodily injury or even death. Never leave the keys in your vehicle with unsupervised children, when the Engine is running.

OHG040001L

Type A

To unfold the key, press the release button then the key will unfold automatically.

To fold the key, fold the key manually while pressing the release button.

⚠ CAUTION

Do not fold the key without pressing the release button. This may damage the key.

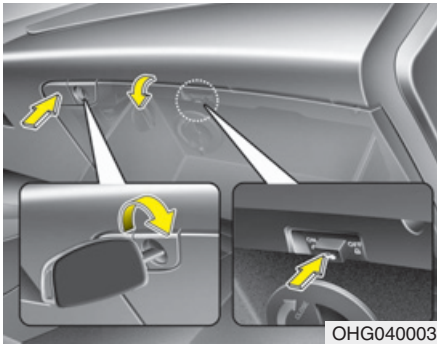

Restrictions in handling keys

When leaving keys with parking lot and valet attendants, the following procedures will ensure that your vehicle's trunk and glove box compartment can not be opened in your absence.

To activate the trunk lock system so that the trunk can only be opened with the main key, perform the following:

1. Unlock the glove box by using the main key then open it.
2. Set the trunk lid control button to the OFF position (unpressed).
3. Close and lock the glove box using the main key.

When leaving your keys with a parking lot or valet attendant, perform steps 1 to 3 above, and leave the sub key with the attendant. In this manner the sub key can only be used to start the engine and operate door locks.

Lock release

To release the trunk lock feature, open the glove box with the main key and set the trunk lid control button to the ON position (pressed).

Type B

To remove the mechanical key, press and hold the release button (1) and remove the mechanical key (2).

To reinstall the mechanical key, put the key into the hole and push it until a click sound is heard.

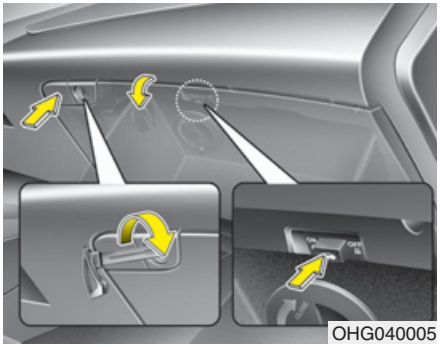

Restrictions in handling keys

When leaving keys with parking lot and valet attendants, the following procedures will ensure that your vehicle's trunk and glove box compartment can not be opened in your absence.

To activate the trunk lock system so that the trunk can only be opened with the mechanical key, perform the following:

1. Press and hold the release button and remove the mechanical key.
2. Unlock the glove box by using the mechanical key then open it.
3. Set the trunk lid control button to OFF position (unpressed).
4. Close and lock the glove box using the mechanical key.

When leaving your keys with a parking lot attendant or valet, perform steps 1 to 4 above, remove the mechanical key from the smart key and leave the smart key with the attendant. In this manner the smart key can only be used to start the engine and operate door locks.

Lock release

To release the trunk lock feature, open the glove box with the mechanical key and set the trunk lid control button to ON position (pressed). In this position the trunk will open with the trunk lid button or smart key.

Immobilizer system (if equipped)

Your vehicle may be equipped with an electronic engine immobilizer system to reduce the risk of unauthorized vehicle use.

Your immobilizer system is comprised of a small transponder in the ignition key and electronic devices inside the vehicle.

With the immobilizer system, whenever you insert your ignition key into the ignition switch and turn it to ON, it checks and determines and verifies if the ignition key is valid or not.

If the key is determined to be valid, the engine will start.

If the key is determined to be invalid, the engine will not start.

To activate the immobilizer system:

Turn the ignition key to the OFF position. The immobilizer system activates automatically. Without a valid ignition key for your vehicle, the engine will not start.

To deactivate the immobilizer system:

Insert the ignition key into the key cylinder and turn it to the ON position.

⚠ WARNING

In order to prevent theft of your vehicle, do not leave spare keys anywhere in your vehicle. Your Immobilizer password is a customer unique password and should be kept confidential. Do not leave this number anywhere in your vehicle.

✻ NOTICE

When starting the engine, do not use the key with other immobilizer keys around. Otherwise the engine may not start or may stop soon after it starts. Keep each key separate in order to avoid a starting malfunction.

⚠ CAUTION

Do not put metal accessories near the ignition switch.

The engine may not start because the metal accessories may interrupt the transponder signal from transmitting normally.

✻ NOTICE

If you need additional keys or lose your keys, consult an authorized HYUNDAI dealer.

⚠ CAUTION

The transponder in your ignition key is an important part of the immobilizer system. It is designed to give years of trouble-free service, however you should avoid exposure to moisture, static electricity and rough handling. Immobilizer system malfunction could occur.

⚠ CAUTION

Do not change, alter or adjust the immobilizer system because it could cause the immobilizer system to malfunction and should only be serviced by an authorized HYUNDAI dealer.

Malfunctions caused by improper alterations, adjustments or modifications to the immobilizer system are not covered by your vehicle manufacturer warranty.

SMART KEY (IF EQUIPPED)

OHG040010L

With a smart key, you can lock or unlock a door (and trunk) and even start the engine without inserting the key.

The functions of buttons on a smart key are similar to the remote keyless entry. (Refer to the “Remote keyless entry” in this section.)

Smart key functions

Carrying the smart key, you may lock and unlock the vehicle doors (and trunk). Also, you may start the engine. Refer to the following, for more details.

OHG040007L

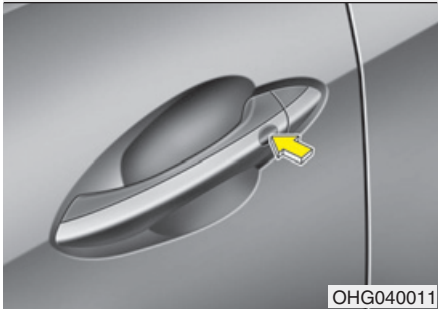

OHG040011

Locking

Using the door handle switch

Pressing the button of the front outside door handles with all doors closed and any door unlock, locks all the doors. If all doors, trunk and engine hood are closed, the hazard warning lights will blink once to indicate that all doors are locked.

Also, the outside rearview mirror will automatically fold if the outside rearview mirror folding switch is in the AUTO position (if equipped).

However, if any door, trunk or engine hood remains open, the hazard warning lights will not operate. If all doors, trunk and engine hood are closed after the lock button is pressed, the hazard warning lights will blink once.

The button will only operate when the smart key is within 0.7~1 m (28~40 in.) from the outside door handle. If you want to make sure that a door has locked or not, you should check the door lock button inside the vehicle or pull the outside door handle.

Even though you press the outside door handle buttons, the doors will not lock and the chime will sound for 3 seconds if any of following occur:

- The smart key is in the vehicle.
- The ignition switch is in ACC or ON position.
- Any door except the trunk is open.

Using the button on the smart key

All doors are locked if the lock button(1) is pressed. If all doors, trunk and hood are closed, the hazard warning lights will blink once to indicate that all doors are locked. Also, the outside rearview mirror will automatically fold if the outside rearview mirror folding switch is in the AUTO position (if equipped).

However, if any door, trunk or engine hood remains open, the hazard warning lights will not operate. If all doors, trunk and engine hood are closed after the lock button is pressed, the hazard warning lights will blink once.

Unlocking

Using the door handle switch

Press the button of the front outside door handles with all doors closed and locked, unlocks all the doors. The hazard warning lights will blink twice to indicate that all doors are unlocked. Also, the outside rearview mirror will automatically unfold if the outside rearview mirror folding switch is in the AUTO position (if equipped). The button will only operate when the smart key is within 0.7~1 m (28~40 in.) from the outside door handle.

When the smart key is recognized in the area of 0.7~1 m (28~40 in.) from the front outside door handle, other people can also open the door without possession of the smart key.

After pressing the button, the doors will lock automatically unless you open any door within 30 seconds.

Using the button on the smart key

All doors are unlocked if the unlock button(2) is pressed. The hazard warning lights will blink twice to indicate that all doors are unlocked. Also, the outside rearview mirror will automatically unfold if the outside rearview mirror folding switch is in the AUTO position (if equipped).

After pressing this button, the doors will lock automatically unless you open any door within 30 seconds.

Trunk open

Using the trunk handle switch

If you are within 0.7~1 m (28~40 in.) from the outside trunk handle with your smart key in your possession, the trunk will unlock and open when you press the trunk handle switch.

Also, once the trunk is opened and then closed, the trunk will lock automatically.

Using the button on the smart key

The trunk is opened if the trunk unlock button(3) is pressed for more than 1 second.

Once the trunk is opened and then closed, the trunk will lock automatically.

The word “HOLD” is written on the button to inform you that you must press and hold the button for more than 1 second.

Start-up

You can start the engine without inserting the key. For detailed information refer to “Engine start/stop button” in section 5.

Smart key precautions

✻ NOTICE

- **If, for some reason, you happen to lose your smart key, you will not be able to start the engine. Tow the vehicle, if necessary, and contact an authorized HYUNDAI dealer.**
- **A maximum of 2 smart keys can be registered to a single vehicle. If you lose a smart key, you should immediately take the vehicle and key to your authorized HYUNDAI dealer to protect it from potential theft.**
- **The smart key will not work if any of following occur:**
  - **The smart key is close to a radio transmitter such as a radio station or an airport which can interfere with normal operation of the smart key.**
  - **You keep the smart key near a mobile two-way radio system or a cellular phone.**
  - **Another vehicle’s smart key is being operated close to your vehicle.**

  When the smart key does not work correctly, open and close the door with the mechanical key. If you have a problem with the smart key, contact an authorized HYUNDAI dealer.

(Continued)

(Continued)

- **If the smart key is in close proximity to your cell phone or smart phone, the signal from the smart key could be blocked by normal operation of your cell phone or smart phone. This is especially important when the phone is active such as making call, receiving calls, text messaging, and/or sending/receiving emails. Avoid placing the smart key and your cell phone or smart phone in the same pants or jacket pocket and maintain adequate distance between the two devices.**

⚠ CAUTION

Keep the smart key away from water or any liquid. If the keyless entry system is inoperative due to exposure to water or liquids, it will not be covered by your manufacturer’s vehicle warranty.

⚠ CAUTION

Keep the smart key away from electromagnetic materials that blocks electromagnetic waves to the key surface.

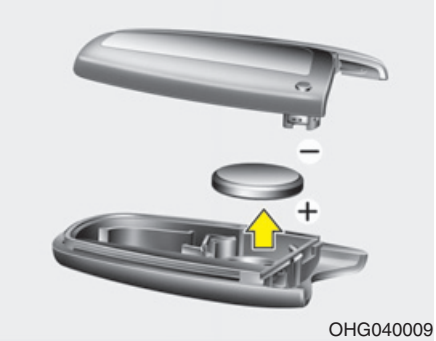

OHG040009

Battery replacement

A smart key battery should last for several years, but if the smart key is not working properly, try replacing the battery with a new one. If you are unsure how to use your smart key or replace the battery, contact an authorized HYUNDAI dealer.

✻ NOTICE

The circuit inside the smart key can have a problem if exposed to moisture or static electricity. If you are unsure how to use your smart key or replace the battery, contact an authorized HYUNDAI dealer.

1. Pry open the rear cover of the smart key.
2. Replace the battery with a new battery (CR2032). When replacing the battery, make sure the battery position.
3. Install the battery in the reverse order of removal.

✻ NOTICE

- **Using the wrong battery can cause the smart key to malfunction. Be sure to use the correct battery.**
- **Circuits inside the smart key may develop problems when dropped, exposed to moisture or static electricity.**
- **If you suspect that your smart key might have sustained some damage, or you feel your smart key is not working correctly, contact an authorized HYUNDAI dealer.**

⚠ CAUTION

An inappropriately disposed battery can be harmful to the environment and human health.

Dispose the battery according to your local law(s) or regulation.

REMOTE KEYLESS ENTRY (IF EQUIPPED)

OHG040006L

Remote keyless entry system operations

Lock (1)

All doors are locked if the lock button is pressed while all doors are closed.
The hazard warning lights blink once to indicate that all doors are locked. Also, the outside rearview mirror will automatically fold if the outside rearview mirror folding switch is in the AUTO position (if equipped).
However, if any door, engine hood or trunk remains open, the hazard warning lights will not operate. If all doors, engine hood and trunk are closed after the lock button is pressed, the hazard warning lights will blink once.

Unlock (2)

All doors are unlocked if the unlock button is pressed.

The hazard warning lights will blink twice to indicate that all doors are unlocked. Also, the outside rearview mirror will automatically unfold if the outside rearview mirror folding switch is in the AUTO position (if equipped).

After pressing this button, the doors will lock automatically unless you open any door within 30 seconds.

Trunk open (3)

The trunk is opened if the button is pressed for more than 1 second.

Once the trunk is opened and then closed with all doors locked, the trunk will lock automatically.

The word "HOLD" is written on the button in inform you that you must press and hold the button for more than 1 second.

Transmitter precautions

✻ NOTICE

- **The transmitter will not work if any of following occur:**
  - **The ignition key is in ignition switch.**
  - **You exceed the operating distance limit (about 30 m [90 feet]).**
  - **The battery in the transmitter is weak.**
  - **Other vehicles or objects may be blocking the signal.**
  - **The weather is extremely cold.**
  - **The transmitter is close to a radio transmitter such as a radio station or an airport which can interfere with normal operation of the transmitter.**

  When the transmitter does not work correctly, open and close the door with the ignition key. If you have a problem with the transmitter, contact an authorized HYUNDAI dealer.
- **If the transmitter is in close proximity to your cell phone or smart phone, the signal from the transmitter could be blocked by normal operation of your cell phone or smart phone. This is especially important when the phone is active such as making call, receiving calls, text messaging, and/or sending/receiving emails.**

(Continued)

(Continued)

Avoid placing the transmitter and your cell phone or smart phone in the same pants or jacket pocket and maintain adequate distance between the two devices.

⚠ CAUTION

Keep the transmitter away from water or any liquid. If the keyless entry system is inoperative due to exposure to water or liquids, it will not be covered by your manufacturer vehicle warranty.

⚠ CAUTION

Changes or modifications not expressly approved by the party responsible for compliance could void the user's authority to operate the equipment. If the keyless entry system is inoperative due to changes or modifications not expressly approved by the party responsible for compliance, it will not be covered by your manufacturer's vehicle warranty.

⚠ CAUTION

Keep the transmitter away from electromagnetic materials that blocks electromagnetic waves to the key surface.

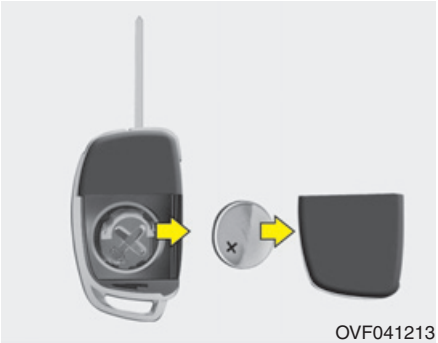

Battery replacement

The transmitter uses a 3 volt lithium battery which will normally last for several years. When replacement is necessary, use the following procedure.

1. Insert a slim tool into the slot and gently pry open the transmitter center cover.
2. Replace the battery with a new battery (CR2032). When replacing the battery, make sure the battery position.
3. Install the battery in the reverse order of removal.

For transmitter replacement, see an authorized HYUNDAI dealer for transmitter reprogramming.

⚠ CAUTION

- ***The keyless entry system transmitter is designed to give you years of trouble-free use, however it can malfunction if exposed to moisture or static electricity. If you are unsure how to use your transmitter or replace the battery, contact an authorized HYUNDAI dealer.***
- ***Using the wrong battery can cause the transmitter to malfunction. Be sure to use the correct battery.***
- ***To avoid damaging the transmitter, don't drop it, get it wet, or expose it to heat or sunlight.***

⚠ CAUTION

An inappropriately disposed battery can be harmful to the environment and human health.

Dispose the battery according to your local law(s) or regulation.

THEFT-ALARM SYSTEM (IF EQUIPPED)

Vehicles equipped with a theft alarm system will have a label attached to the vehicle with the following words:
1. WARNING
2. SECURITY SYSTEM

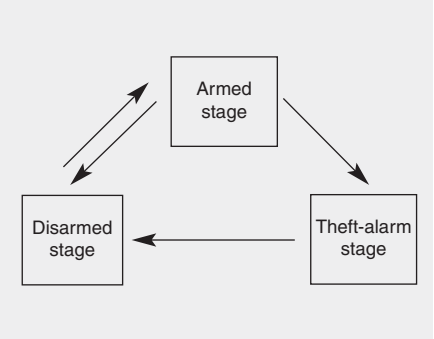

This system is designed to provide protection from unauthorized entry into the car. This system is operated in three stages: the first is the "Armed" stage, the second is the "Theft-alarm" stage, and the third is the "Disarmed" stage. If triggered, the system provides an audible alarm with blinking of the hazard warning lights.

Armed stage

Using the smart key

Park the vehicle and stop the engine. Arm the system as described below.

1. Turn off the engine.
2. Make sure that all doors, the engine hood and trunk lid are closed and latched.
3. • Lock the doors by pressing the button of the front outside door handle with the smart key in your possession.

   After completion of the steps above, the hazard warning lights operate once to indicate that the system is armed.

   If any door remains open, the doors won't lock and the chime will sound for 3 seconds. Close the door and try again to lock the doors.

   If trunk lid or engine hood remains open, the hazard warning lights won't operate and theft-alarm will not arm. After this, trunk lid and engine hood are closed, the hazard warning lights blink once.

- Lock the doors by pressing the lock button on the smart key.

After completion of the steps above, the hazard warning lights will operate once to indicate that the system is armed.

If any door, trunk lid or engine hood remains open, the hazard warning lights won't operate and theft-alarm will not arm. After this, if all doors, trunk lid and engine hood are closed, the hazard warning lights will blink once.

Using the transmitter

Park the vehicle and stop the engine. Arm the system as described below.

1. Turn off the engine and remove the ignition key from the ignition switch.
2. Make sure that all doors, the engine hood and trunk lid are closed and latched.
3. Lock the doors by pressing the lock button on the transmitter.

   After completion of the steps above, the hazard warning lights will blink once to indicate that the system is armed.

   If any door, trunk lid or engine hood remains opened, the hazard warning lights won't operate and theft-alarm will not arm. After this, if all doors, trunk lid and engine hood are closed, the hazard warning lights will blink once.

- **Do not arm the system until all passengers have left the vehicle. If the system is armed while a passenger(s) remains in the vehicle, the alarm may be activated when the remaining passenger(s) leave the vehicle. If any door, trunk lid or engine hood is opened within 30 seconds after entering the armed stage, the system is disarmed to prevent unnecessary alarm.**

Theft-alarm stage

The alarm will be activated if any of the following occurs while the system is armed.

- A door is opened without using the transmitter (or smart key).
- The trunk is opened without using the transmitter (or smart key).
- The engine hood is opened.

The horn will sound and the hazard warning lights will blink continuously for approximately 30 seconds. To turn off the system, unlock the doors with the transmitter (or smart key).

Opening the trunk with the alarm armed (if equipped)

When the alarm is armed, the alarm will not sound if the trunk lid is opened with the transmitter (or the smart key).

Once the trunk is opened and then closed, the trunk will be locked automatically and the system will be armed again.

Also, if any of the doors or hood is opened while the trunk lid is opened and the alarm armed, the alarm will sound.

Disarmed stage

The system will be disarmed when the doors are unlocked with the transmitter (or smart key).

After depressing the unlock button, the hazard warning lights will blink twice to indicate that the system is disarmed.

After depressing the unlock button, if any door (or trunk) is not opened within 30 seconds, the system will be rearmed.

✻ NOTICE

- **Avoid trying to start the engine while the alarm is activated. The vehicle starter motor is disabled during the theft-alarm stage.**
  If the system is not disarmed with the transmitter, insert the key into the ignition switch, turn the ignition switch to the ON position and wait for 30 seconds. Then the system will be disarmed. (except China)
- **If you lose your keys, consult your authorized HYUNDAI dealer.**

⚠ CAUTION

Do not change, alter or adjust the theft-alarm system because it could cause the theft-alarm system to malfunction and should only be serviced by an authorized HYUNDAI dealer.

Malfunctions caused by improper alterations, adjustments or modifications to the theft-alarm system are not covered by your vehicle manufacturer warranty.

DOOR LOCKS

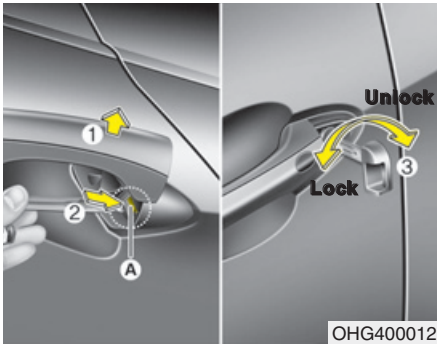

OHG400012

Operating door locks from outside the vehicle

Mechanical key

To remove the cover:

1. Pull out the door handle (1).
2. Press the lever (A) located inside the bottom part of the cover with a key or flat-head screwdriver (2).
3. Push out the cover while pressing the lever.

⚠ WARNING

Be careful not to damage the cover while removing it or misplace it after removing it.

- After removing the cover, turn the key toward the rear of the vehicle to unlock and toward the front of the vehicle to lock (3).
- If you lock/unlock the driver's door with a key, only the driver's door will lock/unlock.
- Once the door is unlocked, it may be opened by pulling the door handle.
- When closing the door, push the door by hand. Make sure that doors are closed securely.

Transmitter/Smart key

- Doors can be locked and unlocked with the transmitter (or smart key).
- Doors can be locked and unlocked pressing the button of the outside door handle with the smart key in your possession.
- Once the doors are unlocked, they may be opened by pulling the door handle.
- When closing the door, push the door by hand. Make sure that doors are closed securely.

✻ NOTICE

- **In cold and wet climates, door locks and door mechanisms may not work properly due to freezing conditions.**
- **If the door is locked/unlocked multiple times in rapid succession with either the vehicle key or door lock switch, the system may stop operating temporarily in order to protect the circuit and prevent damage to system components.**

⚠ WARNING

- **If you don't close the door securely, the door may open again.**
- **Be careful that someone's body and hands are not trapped when closing the door.**

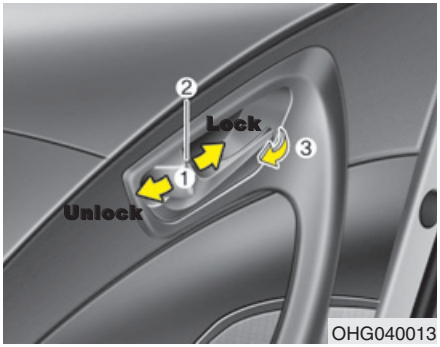

OHG040013

Operating door locks from inside the vehicle

With the door lock button

- To unlock a door, push the door lock button (1) to the “Unlock” position. The red mark (2) on the door lock button will be visible.
- To lock a door, push the door lock button (1) to the “Lock” position. If the door is locked properly, the red mark (2) on the door lock button will not be visible.
- To open a door, pull the door handle (3) outward.
- If the inner door handle of the driver’s or front passenger’s door is pulled when the door lock button is in the lock position, the button unlocked and the door opens.
- The front door cannot be locked if the ignition key is in the ignition switch and the door is opened.
- A door cannot be locked if the smart key is in the vehicle and any door is opened.

⚠ WARNING - Door lock malfunction

If a power door lock ever fails to function while you are in the vehicle, try one or more of the following techniques to exit:

- **Operate the door unlock feature repeatedly (both electronic and manual) while simultaneously pulling on the door handle.**
- **Operate the other door locks and handles, front and rear.**
- **Lower a front window and use the key to unlock the door from outside.**

■ Driver’s door

OHG040014

■ Front passenger’s door

OHG040015

With central door lock switch

Operate by pressing the central door lock switch.

- When pushing down on the front portion (1) of the switch, all vehicle doors will lock.
- When pushing down on the rear portion (2) of the switch, all vehicle doors will unlock.
- If the key is in the ignition switch and front door is opened, the doors will not lock even though the front portion (1) of central door lock switch is pressed.
- If the smart key is in the vehicle and any door is opened, the doors will not lock even though the front portion(1) of central door lock switch is pressed.

⚠ WARNING - Doors

- **The doors should always be fully closed and locked while the vehicle is in motion to prevent accidental opening of the door. Locked doors will also discourage potential intruders when the vehicle stops or slows.**
- **Be careful when opening doors and watch for vehicles, motorcycles, bicycles or pedestrians approaching the vehicle in the path of the door. Opening a door when something is approaching can cause damage or injury.**

⚠ WARNING - Unlocked vehicles

Leaving your vehicle unlocked can invite theft or possible harm to you or others from someone hiding in your vehicle while you are gone. Always remove the ignition key, engage the parking brake, close all windows and lock all doors when leaving your vehicle unattended.

⚠ WARNING - Unattended children

An enclosed vehicle can become extremely hot, causing death or severe injury to unattended children or animals who cannot escape the vehicle. Furthermore, children might operate features of the vehicle that could injure them, or they could encounter other harm, possibly from someone gaining entry to the vehicle. Never leave children or animals unattended in your vehicle.

Door lock/unlock features

Impact sensing door unlock system

All doors will automatically unlock when an impact causes the air bags to deploy.

Speed sensing door lock system (if equipped)

All doors will automatically lock after the vehicle speed exceeds 15 km/h (9.3 mph).

Engine off door unlock system (if equipped)

Without smart key system

All doors will automatically unlock when the key is removed from the ignition switch.

With smart key system

All doors will automatically unlock when the ENGINE START/STOP button is in the OFF position.

Shift lever door lock/unlock system (if equipped)

- All doors will automatically lock when the shift lever is moved out of P (Park).
- All doors will automatically unlock when the shift lever is moved into P (Park).

Driver's door unlock system (if equipped)

All doors will automatically unlock when the driver's door is unlocked.

✻ NOTICE

You can activate or deactivate the auto door lock/unlock features in the vehicle. Refer to "Vehicle Option" in this chapter.

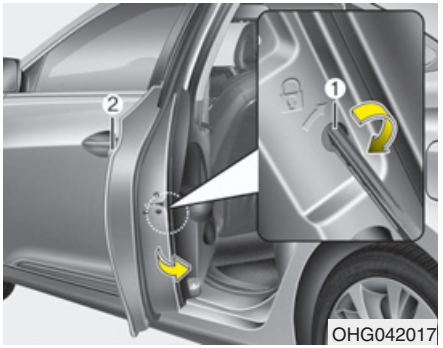

Child-protector rear door lock

The child safety lock is provided to help prevent children from accidentally opening the rear doors from inside the vehicle. The rear door safety locks should be used whenever children are in the vehicle.

1. Open the rear door.
2. Insert a key (or screwdriver) into the hole (1) and turn it to the lock (🔒) position. When the child safety lock is in the lock position, the rear door will not open even though the inner door handle is pulled.
3. Close the rear door.

To open the rear door, pull the outside door handle (2).

Even though the doors may be unlocked, the rear door will not open by pulling the inner door handle until the rear door child safety lock is unlocked.

⚠ WARNING - Rear door locks

If children accidentally open the rear doors while the vehicle is in motion, they could fall out and be severely injured or killed. To prevent children from opening the rear doors from the inside, the rear door safety locks should be used whenever children are in the vehicle.

TRUNK

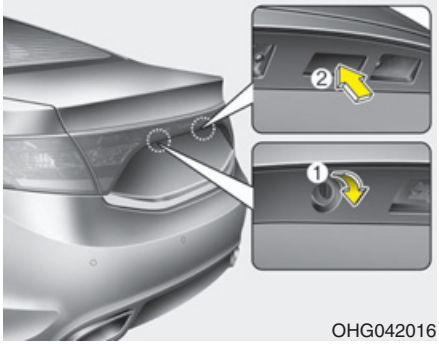

OHG042016

Opening the trunk

- Press the trunk unlock button for more than 1 second on the transmitter (or smart key).
- Press the button on the trunk handle with the smart key in your possession.
- Insert the master key (or mechanical key of the smart key) into the lock and turn it clockwise.

Once the trunk is opened and then closed, the trunk locks automatically.

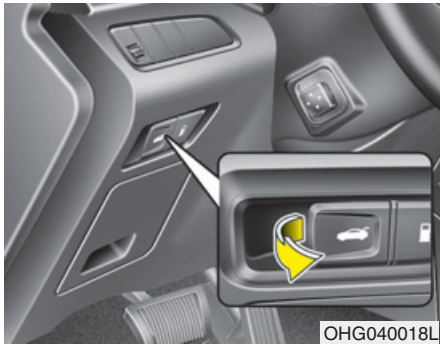
OHG040018L

- To open the trunk from inside the vehicle, pull the trunk lid release lever.

Once the trunk is opened and then closed, the trunk locks automatically.

✻ NOTICE

In cold and wet climates, trunk lock and trunk mechanisms may not work properly due to freezing conditions.

⚠ WARNING

The trunk swings upward. Make sure no objects or people are near the rear of the vehicle when opening the trunk.

⚠ CAUTION

Make certain that you close the trunk before driving your vehicle. Possible damage may occur to the trunk lift cylinders and attached hardware if the trunk is not closed prior to driving.

Closing the trunk

To close, lower the trunk lid, then press down on it until it locks. To be sure the trunk lid is securely fastened, always check by trying to pull it up again.

⚠ WARNING

The trunk lid should be always kept completely closed while the vehicle is in motion. If it is left open or ajar, poisonous exhaust gases may enter the car and serious illness or death may result.

✻ NOTICE

If the trunk is closed with the smart key in it, the chime will sound for approximately 3 seconds and the trunk will reopen.

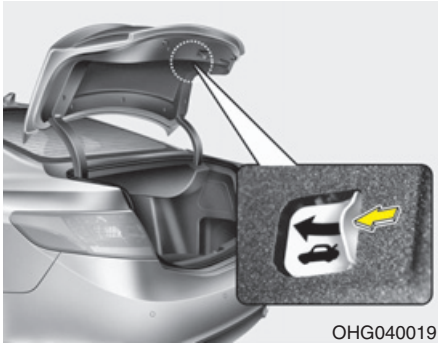
OHG040019

Emergency trunk safety release

Your vehicle is equipped with an emergency trunk release cable located inside the trunk. If someone is inadvertently locked in the trunk, moving the handle in the direction of the arrow will release the trunk latch mechanism and open the trunk.

⚠ WARNING

- **For emergencies, be fully aware of the location of the emergency trunk safety release lever in this vehicle and how to open the trunk if you are accidentally locked in the trunk.**
- **No one should be allowed to occupy the trunk at any time. The trunk is a very dangerous location in the event of a crash.**
- **Use the release lever for emergencies only. Use extreme caution, especially while the vehicle is in motion.**

WINDOWS

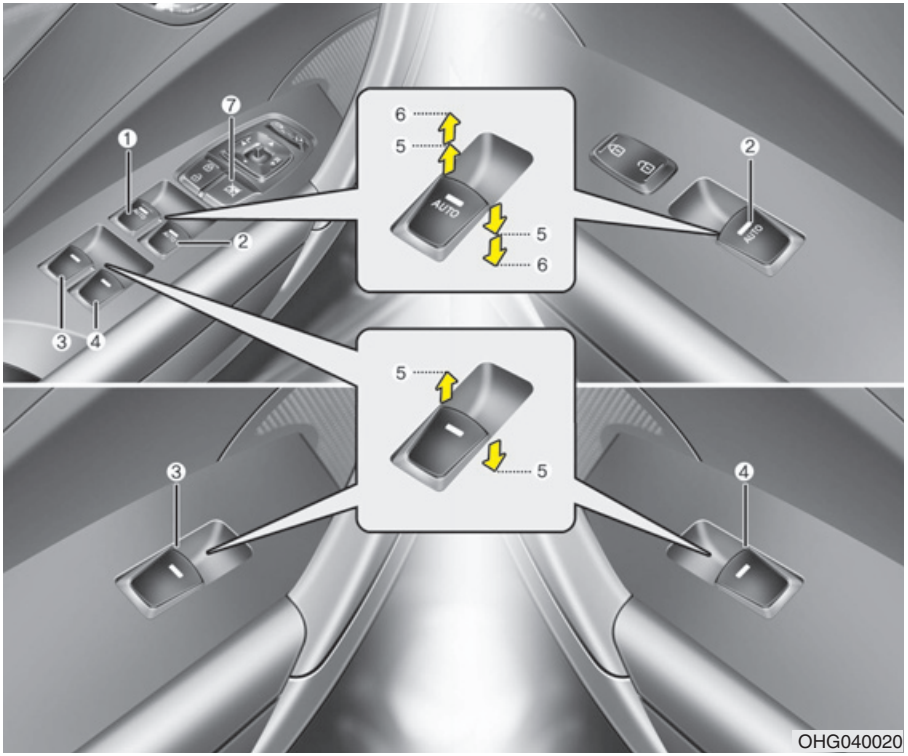

(1) Driver's door power window switch
(2) Front passenger's door power window switch
(3) Rear door (left) power window switch
(4) Rear door (right) power window switch
(5) Window opening and closing
(6) Automatic power window up/down
(7) Power window lock switch

✻ NOTICE

In cold and wet climates, power windows may not work properly due to freezing conditions.

Power windows

The ignition switch must be in the ON position for power windows to operate.

Each door has a power window switch that controls the door's window. The driver has a power window lock switch which can block the operation of passenger windows. The power windows can be operated for approximately 30 seconds after the ignition key is removed or turned to the ACC or LOCK position. However, if the front doors are opened, the power windows cannot be operated within the 30 second period.

✻ NOTICE

While driving with the rear windows down or with the sunroof (if equipped) in an open (or partially open position), your vehicle may demonstrate a wind buffeting or pulsation noise. This noise is a normal occurrence and can be reduced or eliminated by taking the following actions. If the noise occurs with one or both of the rear windows down, partially lower both front windows approximately one inch. If you experience the noise with the sunroof open, slightly reduce the size of the sunroof opening.

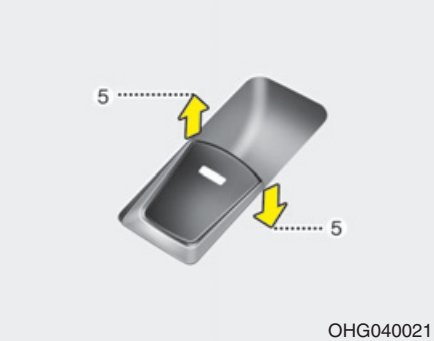

Window opening and closing

The driver's door has a master power window switch that controls all the windows in the vehicle.

To open or close a window, press down or pull up the front portion of the corresponding switch to the first detent position (5).

Auto up/down window

Pressing or pulling up the power window switch momentarily to the second detent position (6) completely lowers or lifts the window even when the switch is released. To stop the window at the desired position while the window is in operation, pull up or press and release the switch to the opposite direction of the movement.

If the power window is not operated correctly, the automatic power window system must be reset as follows:

1. Turn the ignition switch to the ON position.
2. Close the window and continue pulling up on the driver's power window switch for at least 1 second after the window is completely closed.

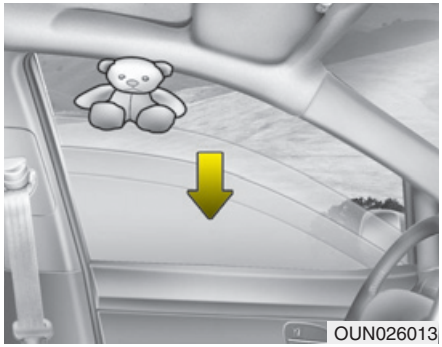

Automatic reversal

If the upward movement of the window is blocked by an object or part of the body, the window will detect the resistance and will stop upward movement. The window will then lower approximately 30 cm (11.8 in.) to allow the object to be cleared.

If the window detects the resistance while the power window switch is pulled up continuously, the window will stop upward movement then lower approximately 2.5 cm (1 in.). And if the power window switch is pulled up continuously again within 5 seconds after the window is lowered by the automatic window reversal feature, the automatic window reversal will not operate.

✻ NOTICE

The automatic reverse feature for the window is only active when the "auto up" feature is used by fully pulling up the switch. The automatic reverse feature will not operate if the window is raised using the halfway position on the power window switch.

⚠ WARNING

Always check for obstructions before raising any window to avoid injuries or vehicle damage. If an object less than 4 mm (0.16 in.) in diameter is caught between the window glass and the upper window channel, the automatic reverse window may not detect the resistance and will not stop and reverse direction.

OHG040023

Power window lock button

The driver can disable the power window switches on the rear passengers' doors by pressing the power window lock switch to the lock position (pressed).

When the power window lock switch is pressed:

- The driver's master control can operate all the power windows.
- The front passenger's control can operate the front passenger's power window.
- The rear passenger's control cannot operate the rear passenger's power window.

⚠ CAUTION

- ***To prevent possible damage to the power window system, do not open or close two windows or more at the same time. This will also ensure the longevity of the fuse.***
- ***Never try to operate the main switch on the driver's door and the individual door window switch in opposing directions at the same time. If this is done, the window will stop and cannot be opened or closed.***

⚠ WARNING - Windows

- **NEVER leave the keys in your vehicle with unsupervised children, when the Engine is running.**
- **NEVER leave any child unattended in the vehicle. Even very young children may inadvertently cause the vehicle to move, entangle themselves in the windows, or otherwise injure themselves or others.**
- **Always double check to make sure all arms, hands, head and other obstructions are safely out of the way before closing a window.**
- **Do not allow children to play with the power windows. Keep the driver's door power window lock switch in the LOCK position (pressed). Serious injury can result from unintentional window operation by the child.**
- **Do not extend face or arms outside through the window opening while driving.**

HOOD

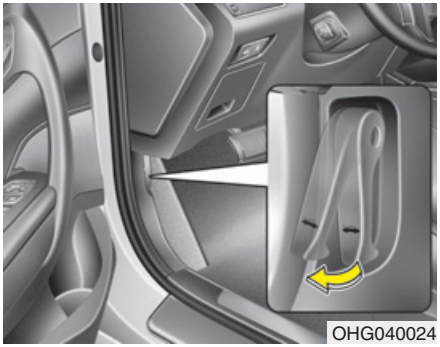
OHG040024

Opening the hood

1. Pull the release lever to unlatch the hood. The hood should pop open slightly.

⚠ WARNING

Open the hood after turning off the engine on a flat surface, shift the shift lever to the P(Park) position and set the parking brake.

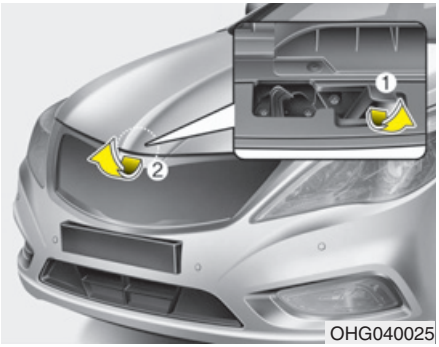

OHG040025

2. Go to the front of the vehicle, raise the hood slightly, pull the secondary latch (1) inside of the hood center and lift the hood (2).
3. Raise the hood. It will raise completely by itself after it has been raised about halfway.

Closing the hood

1. Before closing the hood, check the following:
   - All filler caps in engine compartment must be correctly installed.
   - Gloves, rags or any other combustible material must be removed from the engine compartment.
2. Lower the hood halfway and push down to securely lock in place.

⚠ WARNING

- **Before closing the hood, ensure that all obstructions are removed from the hood opening. Closing the hood with an obstruction present in the hood opening may result in property damage or severe personal injury.**
- **Do not leave gloves, rags or any other combustible material in the engine compartment. Doing so may cause a heat-induced fire.**

⚠ WARNING

- **Always double check to be sure that the hood is firmly latched before driving away. If it is not latched, the hood could fly open while the vehicle is being driven, causing a total loss of visibility, which might result in an accident.**
- **Do not move the vehicle with the hood raised. The view will be blocked and the hood could fall or be damaged.**

FUEL FILLER LID

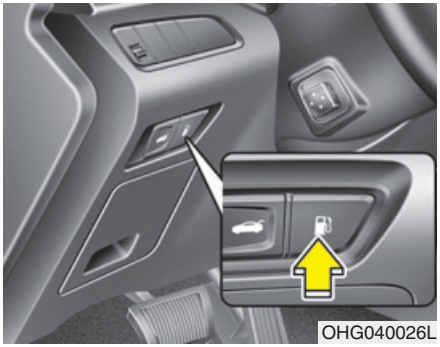
OHG040026L

Opening the fuel filler lid

The fuel filler lid must be opened from inside the vehicle by pushing the fuel filler lid opener button.

✻ NOTICE

If the fuel filler lid will not open because ice has formed around it, tap lightly or push on the lid to break the ice and release the lid. Do not pry on the lid. If necessary, spray around the lid with an approved de-icer fluid (do not use radiator anti-freeze) or move the vehicle to a warm place and allow the ice to melt.

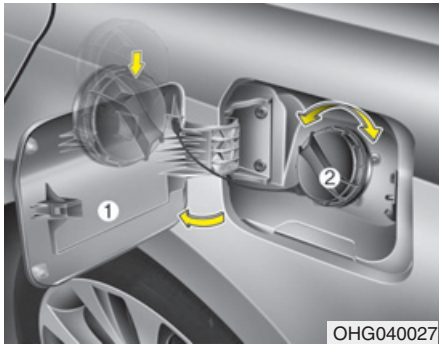

OHG040027

1. Stop the engine.
2. To open the fuel filler lid, push the fuel filler lid opener button.
3. Pull the fuel filler lid (1) out to fully open.
4. To remove the cap, turn the fuel tank cap (2) counterclockwise.
5. Refuel as needed.

Closing the fuel filler lid

1. To install the cap, turn it clockwise until it “clicks”. This indicates that the cap is securely tightened.
2. Close the fuel filler lid and push it lightly and make sure that it is securely closed.

⚠ WARNING - Refueling

- **If pressurized fuel sprays out, it can cover your clothes or skin and thus subject you to the risk of fire and burns. Always remove the fuel cap carefully and slowly. If the cap is venting fuel or if you hear a hissing sound, wait until the condition stops before completely removing the cap.**
- **Do not "top off" after the nozzle automatically shuts off when refueling.**
- **Always check that the fuel cap is installed securely to prevent fuel spillage in the event of an accident.**

⚠ WARNING - Refueling dangers

Automotive fuels are flammable materials. When refueling, please note the following guidelines carefully. Failure to follow these guidelines may result in severe personal injury, severe burns or death by fire or explosion.

- **Read and follow all warnings at the gas station facility.**
- **Before refueling note the location of the Emergency Gasoline Shut-Off, if available, at the gas station facility.**
- **Before touching the fuel nozzle, you should eliminate potentially dangerous static electricity discharge by touching another metal part of the vehicle, a safe distance away from the fuel filler neck, nozzle, or other gas source.**

(Continued)

(Continued)

- **Do not get back into a vehicle once you have begun refueling since you can generate static electricity by touching, rubbing or sliding against any item or fabric (polyester, satin, nylon, etc.) capable of producing static electricity. Static electricity discharge can ignite fuel vapors resulting in rapid burning. If you must re-enter the vehicle, you should once again eliminate potentially dangerous static electricity discharge by touching a metal part of the vehicle, away from the fuel filler neck, nozzle or other gasoline source.**
- **When using an approved portable fuel container, be sure to place the container on the ground prior to refueling. Static electricity discharge from the container can ignite fuel vapors causing a fire. Once refueling has begun, contact with the vehicle should be maintained until the filling is complete.**

(Continued)

(Continued)

Use only approved portable plastic fuel containers designed to carry and store gasoline.

- **Do not use cellular phones while refueling. Electric current and/or electronic interference from cellular phones can potentially ignite fuel vapors causing a fire.**
- **When refueling, always shut the engine off. Sparks produced by electrical components related to the engine can ignite fuel vapors causing a fire. Once refueling is complete, check to make sure the filler cap and filler door are securely closed, before starting the engine.**
- **DO NOT use matches or a lighter and DO NOT SMOKE or leave a lit cigarette in your vehicle while at a gas station especially during refueling. Automotive fuel is highly flammable and can, when ignited, result in fire.**

(Continued)

(Continued)

- **If a fire breaks out during refueling, leave the vicinity of the vehicle, and immediately contact the manager of the gas station and then contact the local fire department. Follow any safety instructions they provide.**

⚠ **CAUTION**

- ***Make sure to refuel your vehicle according to the "Fuel requirements" suggested in section 1.***
- ***If the fuel filler cap requires replacement, use only a genuine HYUNDAI cap or the equivalent specified for your vehicle. An incorrect fuel filler cap can result in a serious malfunction of the fuel system or emission control system.***
- ***Do not spill fuel on the exterior surfaces of the vehicle. Any type of fuel spilled on painted surfaces may damage the paint.***
- ***After refueling, make sure the fuel cap is installed securely to prevent fuel spillage in the event of an accident.***

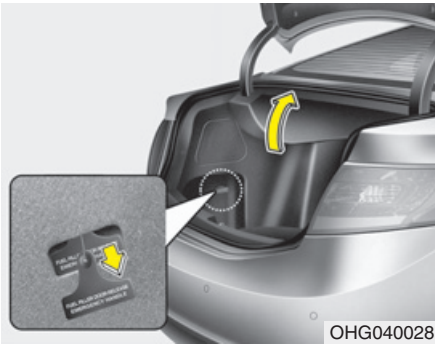
OHG040028

Emergency fuel filler lid release (if equipped)

If the fuel filler lid does not open using the remote fuel filler lid release, you can open it manually by pulling the handle outward slightly.

⚠ **CAUTION**

Do not pull the handle excessively, otherwise the luggage area trim or release handle may be damaged.

PANORAMA SUNROOF (IF EQUIPPED)

OHG041029L

If your vehicle is equipped with a sunroof, you can slide or tilt your sunroof with the sunroof control lever located on the overhead console.

The sunroof can only be opened, closed, or tilted when the ignition switch is in the ON position.

✻ NOTICE

- **In cold and wet climates, the sunroof may not work properly due to freezing conditions.**
- **After washing the car or after there is rain, be sure to wipe off any water that is on the sunroof before operating it.**

⚠ CAUTION

Do not continue to move the sunroof control lever after the sunroof is fully opened, closed, or tilted. Damage to the motor or system components could occur.

⚠ WARNING

Never adjust the sunroof or sunshade while driving. This could result in loss of control and an accident that may cause death, serious injury, or property damage.

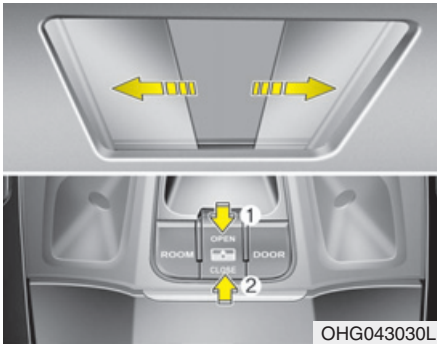

OHG043030L

Sunshade

- To open the sunshade, press the sunshade control switch (1).
- To close the sunshade, press the sunshade control switch (2). If you press the switch when the sunroof glass is opened, the sunroof glass will close then the sunshade will close.

To stop the sliding at any point, press the sunshade control switch momentarily.

✻ NOTICE

It is normal for wrinkles to form on the blind because of its material characteristic.

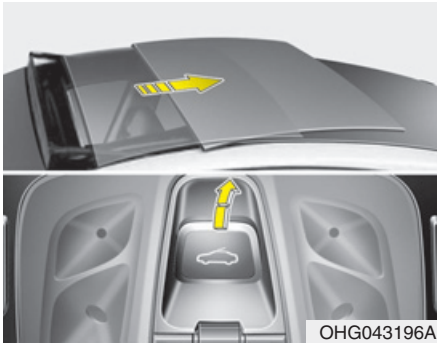
OHG043196A

Sliding the sunroof

When the sunshade is closed

If you pull the sunroof control lever backward, the sunshade will slide all the way open then the sunroof glass will slide all the way open. To stop the sunroof movement at any point, pull or push the sunroof control lever momentarily.

When the sunshade is opened

If you pull the sunroof control lever backward, the sunroof glass will slide all the way open. To stop the sunroof movement at any point, pull or push the sunroof control lever momentarily.

✻ NOTICE

Only the front glass of the panorama sunroof opens and closes.

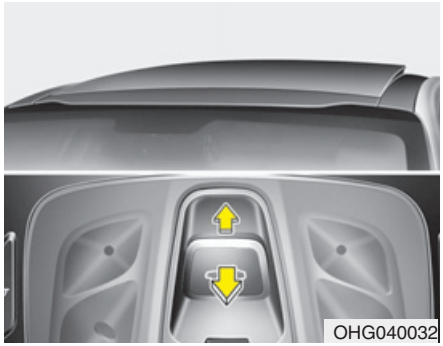
OHG040032

Tilting the sunroof

When the sunshade is closed

If you push the sunroof control lever upward, the sunshade will slide all the way open then the sunroof glass will tilt.

To stop the sunroof movement at any point, pull or push the sunroof control lever momentarily.

When the sunshade is opened

If you push the sunroof control lever upward, the sunroof glass will tilt.

To stop the sunroof movement at any point, pull or push the sunroof control lever momentarily.

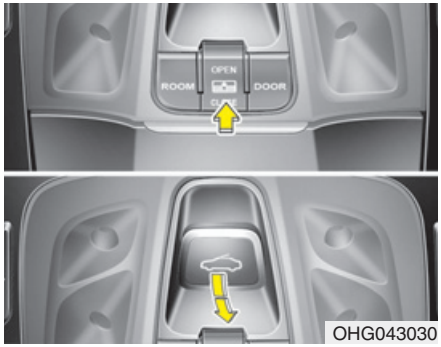

OHG043030

Closing the sunroof

Press the sunshade CLOSE button. The sunroof glass will close then the sunshade will close. To stop the sunroof movement at any point, press the sunshade control switch momentarily.

If you want to close the sunroof glass only, push the sunroof control lever. The sunroof glass will close and the sunshade will not close. To stop the sunroof movement at any point, pull or push the sunroof control lever momentarily.

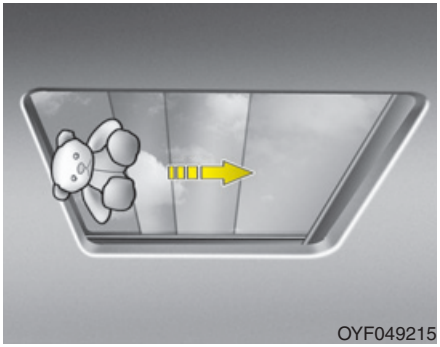

Automatic reversal

If an object or part of the body is detected while the sunroof glass or sunshade is closing automatically, it will reverse the direction, and then stop.

The auto reverse function does not work if a tiny obstacle is between the sliding glass or sunshade and the sunroof sash. You should always check that all passengers and objects are away from the sunroof before closing it.

⚠ WARNING - Sunroof

- **Be careful that someone's head, hands and body are not trapped by a closing sunroof.**
- **Do not extend the face, neck, arms or body outside through an opened sunroof while driving.**
- **Make sure your hands and face are safely out of the way before closing a sunroof.**
- **A panorama sunroof is made of glass, therefore it may break in an accident. If you do not have your seat belt on, you may stick out of the broken glass and get injured or killed. For all passengers safety, have an appropriate protection on (ex. seat belt, CRS, etc.).**

⚠ CAUTION

- ***Periodically remove any dirt that may accumulate on the guide rail.***
- ***If you try to open the sunroof when the temperature is below freezing or when the sunroof is covered with snow or ice, the glass or the motor could be damaged.***
- ***If you drive with the sunroof opened right after a car wash or rain, water may get inside the vehicle.***

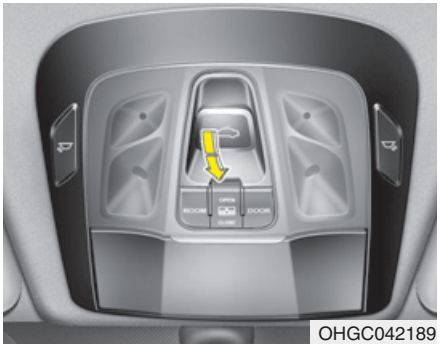

OHGC042189

Resetting the sunroof

Whenever the vehicle battery is disconnected or discharged, or related fuse is blown, you must reset your sunroof system as follows:

1. Turn the engine on and close the sunroof glass and sunshade completely.
2. Release the control lever.
3. Push the sunroof control lever forward in the direction of close (about 10 seconds) until the sunroof is moved a little. Then, release the lever.
4. Push the sunroof control lever forward in the direction of close until the sunroof operates as follows;

   SUNSHADE OPEN → TILT OPEN → SLIDE OPEN → SLIDE CLOSE → SUNSHADE CLOSE

   Then, release the control lever.

   When this is complete, the sunroof system is reset.

For more detailed information, contact an authorized HYUNDAI dealer.

✻ NOTICE

If you do not reset the sunroof, it may not work properly.

DRIVER POSITION MEMORY SYSTEM (IF EQUIPPED)

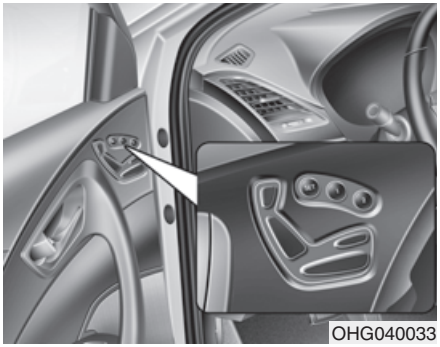
OHG040033

A driver position memory system is provided to store and recall the driver's seat, outside rearview mirror and steering wheel position or the instrument panel illumination intensity with a simple button operation. By saving the desired positions into the system memory, different drivers can reposition the positions based upon their driving preference. If the battery is disconnected, the position memory will be erased.

⚠ WARNING

Never attempt to operate the driver position memory system while the vehicle is moving.

This could result in loss of control, and an accident causing death, serious injury, or property damage.

Storing positions into memory using the buttons on the door

Storing driver's seat positions

1. Shift the shift lever into P (Park) while the ignition switch is ON.
2. Adjust the driver's seat, outside rearview mirror, steering wheel position and instrument panel illumination intensity comfortable to the driver.
3. Press the SET button on the control panel. The system will beep once.
4. Press one of the memory buttons (1 or 2) within 5 seconds after pressing the SET button. The system will beep twice when memory has been successfully stored.
5. "Driver 1(or 2) set is memorized" will appear on the instrument cluster LCD display.

Recalling positions from memory

1. Shift the shift lever into P (Park) while the ignition switch is ON.
2. To recall the position in memory, press the desired memory button (1 or 2). The system will beep once, then the driver's seat, outside rearview mirror, steering wheel and the instrument panel illumination will automatically adjust to the stored positions.
3. "Driver 1 (or 2) set is changed" will appear on the instrument cluster LCD display.

Adjusting the control switch for the driver's seat, outside rearview mirror, steering wheel and the instrument panel illumination while the system is recalling the stored position will cause the movement to stop and move in the direction that the control switch is moved.

⚠ WARNING

Use caution when recalling adjustment memory while sitting in the vehicle. Push the seat position control switch to the desired position immediately if the seat moves too far in any direction.

Easy access function (if equipped)

With the shift lever in the P (Park) position, the system will move the driver's seat and steering wheel automatically so you can comfortably enter and exit the vehicle.

- Without smart key system
  - The steering wheel will move away from the driver and the seat will move rearward, when the ignition key is removed and the driver's door is opened.
  - The steering wheel will move toward the driver and the seat will move forward, when the ignition key is inserted.
- With smart key system
  - The steering wheel will move away from the driver and the seat will move rearward, when the ENGINE START/STOP button is in the OFF position and the driver's door is opened.
  - The steering wheel will move toward the driver and the seat will move forward, when the ENGINE START/STOP button is in the ACC position.

You can activate or deactivate this feature. Refer to "Vehicle Option" in this chapter.

STEERING WHEEL

Power steering

Power steering uses energy from the engine to assist you in steering the vehicle. If the engine is off or if the power steering system becomes inoperative, the vehicle may still be steered, but it will require increased steering effort.

Should you notice any change in the effort required to steer during normal vehicle operation, have the power steering checked by an authorized HYUNDAI dealer.

⚠ CAUTION

Never hold the steering wheel against a stop (extreme right or left turn) for more than 5 seconds with the engine running. Holding the steering wheel for more than 5 seconds in either position may cause damage to the power steering pump.

✻ NOTICE

If the power steering drive belt breaks or if the power steering pump malfunctions, the steering effort will greatly increase.

✻ NOTICE

If the vehicle is parked for extended periods outside in cold weather (below -10°C/14°F), the power steering may require increased effort when the engine is first started. This is caused by increased fluid viscosity due to the cold weather and does not indicate a malfunction.

When this happens, increase the engine RPM by depressing accelerator until the RPM reaches 1,500 rpm then release or let the engine idle for two or three minutes to warm up the fluid.

Tilt steering

Tilt steering allows you to adjust the steering wheel before you drive. You can also raise it to give your legs more room when you exit and enter the vehicle.

The steering wheel should be positioned so that it is comfortable for you to drive, while permitting you to see the instrument panel warning lights and gauges.

⚠ WARNING

- **Never adjust the angle of the steering wheel while driving. You may lose steering control and cause severe personal injury, death or accidents.**
- **After adjusting, push the steering wheel both up and down to be certain it is locked in position.**

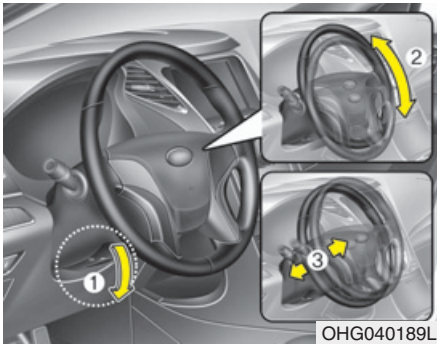

OHG040189L

Manual type

To change the steering wheel angle, pull down the lock release lever (1), adjust the steering wheel to the desired angle (2) and height (3), then pull up the lock-release lever to lock the steering wheel in place. Be sure to adjust the steering wheel to the desired position before driving.

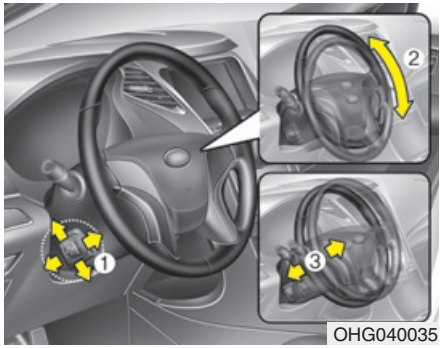

OHG040035

Electric type

Adjust the steering wheel angle (2) and position (3) with the switch (1). Never adjust the position of the steering wheel while driving.

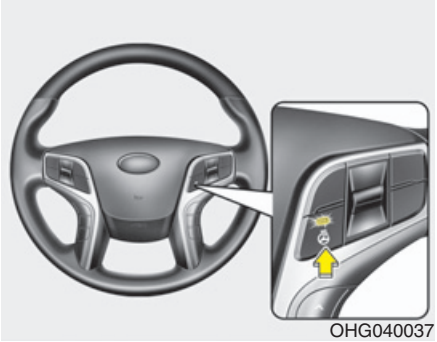
OHG040037

Heated steering wheel (if equipped)

With the ignition switch in the ON position, pressing the heated steering wheel button warms the steering wheel. The indicator on the button will illuminate.

To turn the heated steering wheel off, press the button once again. The indicator on the button will turn off.

It will turn off automatically approximately 30 minutes after the heated steering wheel is turned on.

⚠ CAUTION

Do not install any grip to operate the steering wheel. This causes damage to the heated steering wheel system.

OHG040038

Horn

To sound the horn, press the horn symbol on your steering wheel. Check the horn regularly to be sure it operates properly.

✻ NOTICE

To sound the horn, press the area indicated by the horn symbol on your steering wheel (see illustration). The horn will operate only when this area is pressed.

⚠ CAUTION

Do not strike the horn severely to operate it, or hit it with your fist. Do not press on the horn with a sharp-pointed object.

MIRRORS

Inside rearview mirror

Adjust the rearview mirror to center on the view through the rear window. Make this adjustment before you start driving.

⚠ WARNING - Rear visibility

Do not place objects in the rear seat or cargo area which would interfere with your vision through the rear window.

⚠ WARNING

Do not modify the inside mirror and do not install a wide mirror. It could result in injury, during an accident or deployment of the air bag.

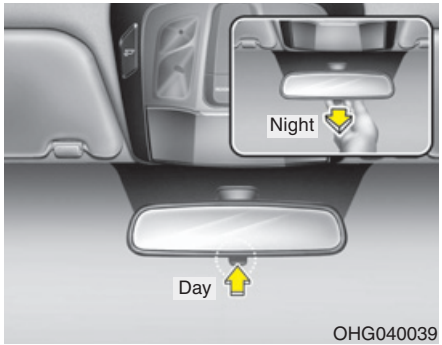

Day/night rearview mirror

Make this adjustment before you start driving and while the day/night lever is in the day position.

Pull the day/night lever toward you to reduce the glare from the headlights of the vehicles behind you during night driving.

Remember that you lose some rearview clarity in the night position.

Electric chromic mirror (ECM)

The electric chromic mirror automatically controls the glare from the headlights of the car behind you in nighttime or low light driving conditions. The sensor mounted in the mirror senses the light level around the vehicle, and automatically controls the headlight glare from vehicles behind you.

When the engine is running, the glare is automatically controlled by the sensor mounted in the rearview mirror.

Whenever the shift lever is shifted into R (Reverse), the mirror will automatically go to the brightest setting in order to improve the drivers view behind the vehicle.

⚠ CAUTION

When cleaning the mirror, use a paper towel or similar material dampened with glass cleaner. Do not spray glass cleaner directly on the mirror as that may cause the liquid cleaner to enter the mirror housing.

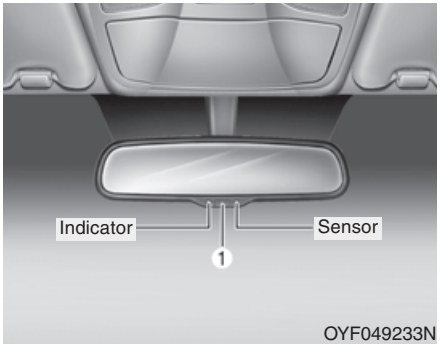

To operate the electric rearview mirror:

- Press the ON/OFF button (1) to turn the automatic dimming function on. The mirror indicator light will illuminate.

  Press the ON/OFF button to turn the automatic dimming function off. The mirror indicator light will turn off.
- The mirror defaults to the ON position whenever the ignition switch is turned on.

Outside rearview mirror

Be sure to adjust mirror angles before driving.

Your vehicle is equipped with both left-hand and right-hand outside rearview mirrors. The mirrors can be adjusted remotely with the remote switch. The mirror heads can be folded back to prevent damage during an automatic car wash or when passing in a narrow street.

⚠ WARNING - Rearview mirrors

- **The right outside rearview mirror is convex. In some countries, the left outside rearview mirror is also convex. Objects seen in the mirror are closer than they appear.**
- **Use your interior rearview mirror or direct observation to determine the actual distance of following vehicles when changing lanes.**

⚠ CAUTION

Do not scrape ice off the mirror face; this may damage the surface of the glass. If ice should restrict movement of the mirror, do not force the mirror for adjustment. To remove ice, use a deicer spray, or a sponge or soft cloth with very warm water.

⚠ CAUTION

If the mirror is jammed with ice, do not adjust the mirror by force. Use an approved spray de-icer (not radiator antifreeze) to release the frozen mechanism or move the vehicle to a warm place and allow the ice to melt.

⚠ WARNING

Do not adjust or fold the outside rearview mirrors while the vehicle is moving. This could result in loss of control, and an accident which could cause death, serious injury or property damage.

OHG040044

Adjusting the outside rearview mirror

The electric remote control mirror switch allows you to adjust the position of the left and right outside rearview mirrors. To adjust the position of either mirror the ignition switch should be in the ACC position. Move the lever (1) to R (right) or L (left) to select the right side mirror or the left side mirror, then press a corresponding point on the mirror adjustment control to position the selected mirror up, down, left or right.

After the adjustment, put the lever into the neutral (center) position to prevent inadvertent adjustment.

⚠ CAUTION

- ***The mirrors stop moving when they reach the maximum adjusting angles, but the motor continues to operate while the switch is pressed. Do not press the switch longer than necessary, the motor may be damaged.***
- ***Do not attempt to adjust the outside rearview mirror by hand. Doing so may damage the parts.***

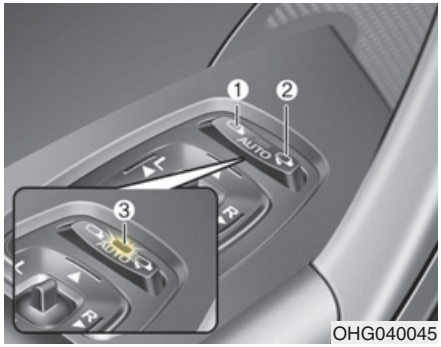

OHG040045

Folding/Unfolding the outside rearview mirror (if equipped)

The outside rearview mirror can be folded or unfolded by pressing the switch as below.

Left (1) : The mirror will unfold.

Right (2) : The mirror will fold.

Center (AUTO, 3) :

The mirror will fold or unfold automatically as follows:

- Without smart key system
  - The mirror will fold or unfold when the door is locked or unlocked by the transmitter.
- With smart key system
  - The mirror will fold or unfold when the door is locked or unlocked by the smart key.

- The mirror will fold or unfold when the door is locked or unlocked by the button on the outside door handle.
- The mirror will unfold when you approach the vehicle (all doors closed and locked) with a smart key in possession. (if equipped)

⚠ CAUTION

The electric type outside rearview mirror operates even though the ignition switch is in the OFF position. However, to prevent unnecessary battery discharge, do not adjust the mirrors longer than necessary while the engine is not running.

⚠ CAUTION

In case it is an electric type outside rearview mirror, don't fold it by hand. It could cause motor failure.

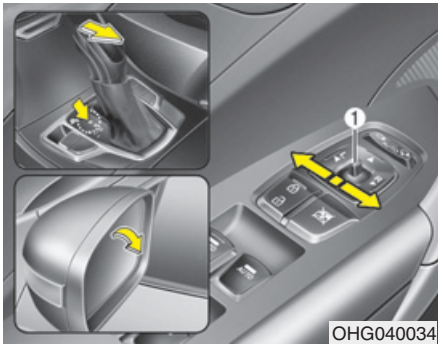

Reverse parking aid function (if equipped)

While the vehicle is moving backward, the outside rearview mirror(s) will move downward to aid reverse parking. According to the position of the outside rearview mirror switch (1), the outside rearview mirror(s) will operate as follows:

L/R : When the remote control outside rearview mirror switch is selected to the L (left) or R (right) position, both outside rearview mirrors will move downward.

Neutral : When the remote control outside rearview mirror switch is placed in the middle position, the outside rearview mirrors will not operate while the vehicle is moving backward.

✻ NOTICE

The outside rearview mirrors will automatically revert to their original positions under the following conditions:

1. **Ignition switch is in the LOCK position.**
2. **Shift lever is moved to any position except R.**
3. **Remote control outside rearview mirror switch is placed in the middle position.**

INSTRUMENT CLUSTER

■ Type A

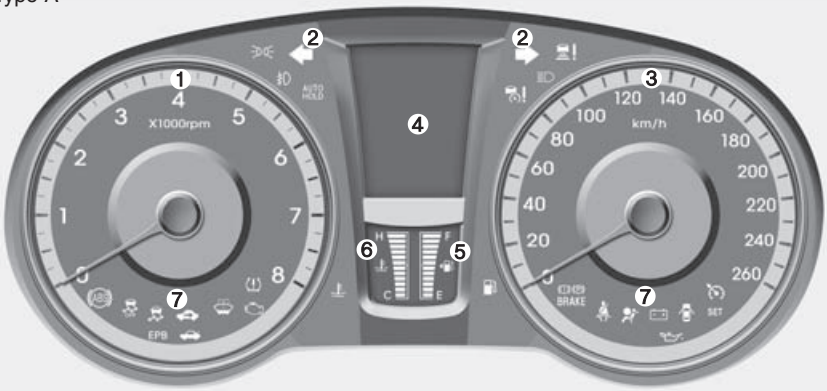

■ Type B

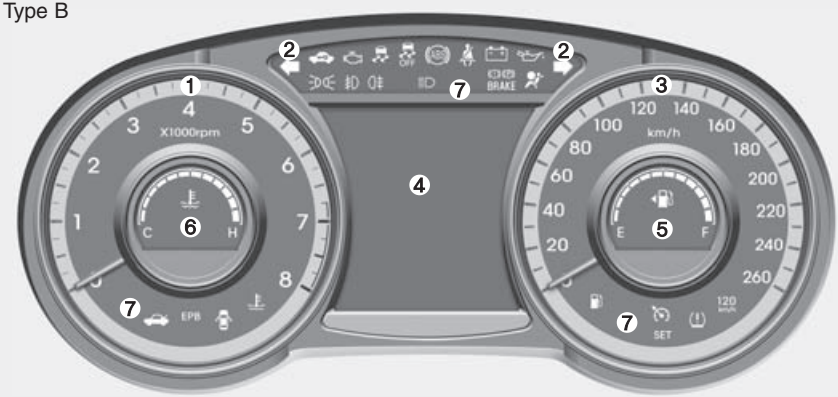

1. Tachometer
2. Turn signal indicators
3. Speedometer
4. Odometer/Trip computer*
5. Fuel gauge
6. Engine temperature gauge
7. Warning and indicator lights

* : if equipped

❊ The actual cluster in the vehicle may differ from the illustration.
For more details, refer to the "Gauges" in the next pages.

OHG040046L/OHG040047L

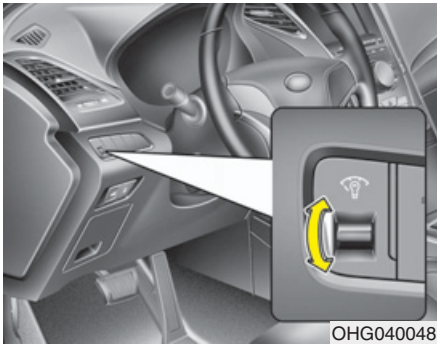

OHG040048

Instrument panel illumination

The instrument panel illumination intensity can be adjusted by pushing the control switch up or down with the headlight switch in the parking light or headlight position when the ignition switch is in the ON position.

The illumination intensity is shown on the instrument cluster LCD display.

⚠ WARNING

Never adjust the instrument cluster while driving. This could result in loss of control and lead to an accident that may cause death, serious injury, or property damage.

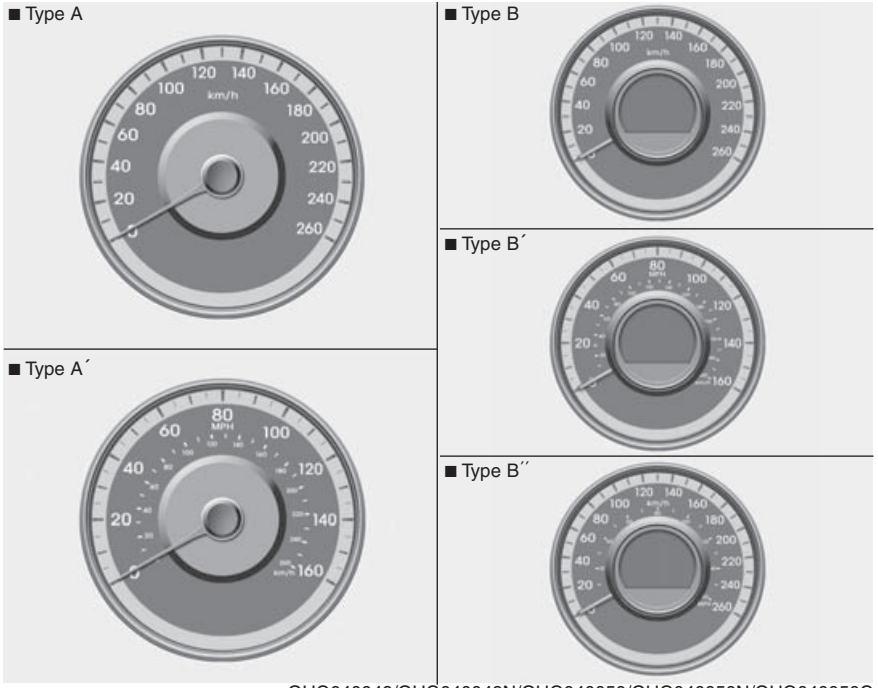

OHG040049/OHG040049N/OHG040050/OHG040050N/OHG040050C

Gauges

Speedometer

The speedometer indicates the forward speed of the vehicle.

The speedometer is calibrated in kilometers per hour and/or miles per hour.

■ Type A

OHG040051

■ Type B

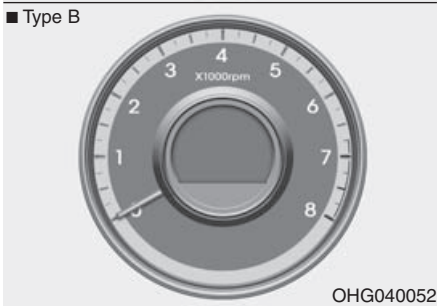

OHG040052

Tachometer

The tachometer indicates the approximate number of engine revolutions per minute (rpm).

Use the tachometer to select the correct shift points and to prevent lugging and/or over-revving the engine.

⚠ CAUTION

Do not operate the engine within the tachometer's RED ZONE. This may cause severe engine damage.

■ Type A ■ Type B

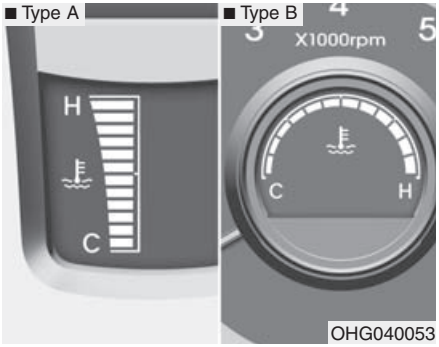

OHG040053

Engine coolant temperature gauge

This gauge shows the temperature of the engine coolant when the ignition switch is ON.

Do not continue driving with an overheated engine. If your vehicle overheats, refer to “If the engine overheats” in section 6.

⚠ CAUTION

If the gauge pointer moves beyond the normal range area toward the “H” position, it indicates overheating that may damage the engine.

⚠ WARNING

Never remove the radiator cap when the engine is hot. The engine coolant is under pressure and could cause severe burns. Wait until the engine is cool before adding coolant to the reservoir.

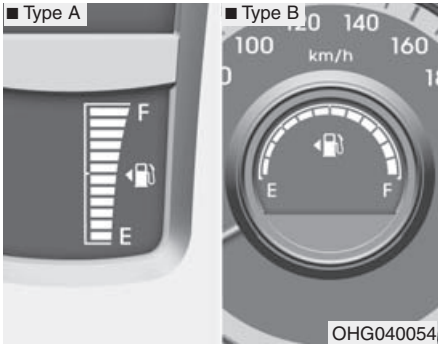

Fuel gauge

The fuel gauge indicates the approximate amount of fuel remaining in the fuel tank. The fuel tank capacity is given in section 8. The fuel gauge is supplemented by a low fuel warning light, which will illuminate when the fuel tank is near empty.

On inclines or curves, the fuel gauge pointer may fluctuate or the low fuel warning light may come on earlier than usual due to the movement of fuel in the tank.

⚠ WARNING - Fuel gauge

Running out of fuel can expose vehicle occupants to danger.

You must stop and obtain additional fuel as soon as possible after the warning light comes on or when the gauge indicator comes close to the E level.

⚠ CAUTION

Avoid driving with a extremely low fuel level. Running out of fuel could cause the engine to misfire, damaging the catalytic converter.

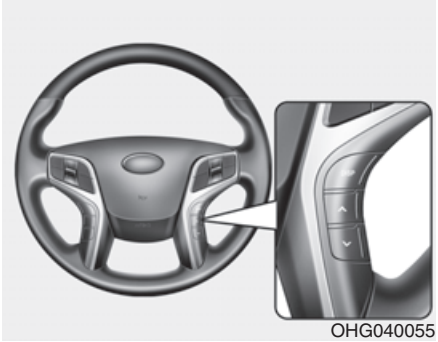
OHG040055

LCD display

The Trip computer, Vehicle option, Maintenance system, Warnings, etc. are displayed on the LCD display.

To change between groups, press the DISP button.

To change between modes in groups, press the ∧ or ∨ button.

Trip computer

The trip computer is a microcomputer-controlled driver information system that displays information related to driving on the display when the ignition switch is in the ON position. All stored driving information (except odometer) is reset if the battery is disconnected.

Press the DISP button to change between modes.

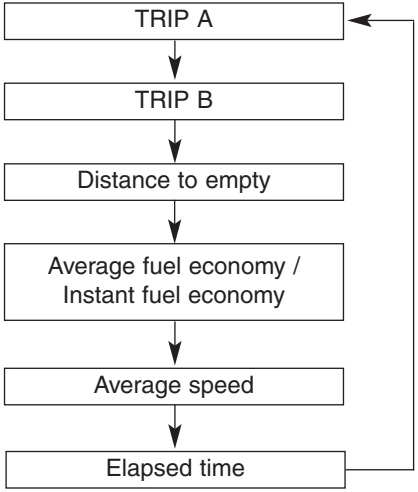

OHG040056L

Odometer (km or mi.)

The odometer indicates the total distance the vehicle has been driven.

You will also find the odometer useful to determine when periodic maintenance should be performed.

■ Type A ■ Type B

OHG040057L

Tripmeter (km or mi.)

TRIP A : Tripmeter A

TRIP B : Tripmeter B

This mode indicates the distance of individual trips selected since the last tripmeter reset.

The meter's working range is from 0.0 to 9999.9 km (0.0 to 9999.9 miles).

Pressing the DISP button for more than 1 second, when the tripmeter (TRIP A or TRIP B) is being displayed, clears the tripmeter to zero (0.0).

■ Type A ■ Type B

OHG040058L

Distance to empty (km or mi.)

This mode indicates the estimated distance to empty based on the current fuel in the fuel tank and the amount of fuel delivered to the engine. When the remaining distance is below 50 km (30 miles), "---" will be displayed and the distance to empty indicator will blink.

The meter's working range is from 50 to 999 km (30 to 999 miles).

■ Type A ■ Type B

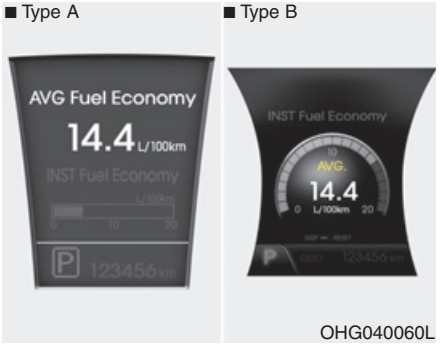

OHG040060L

Average fuel economy (*l*/100 km or MPG)

This mode calculates the average fuel economy from the total fuel used and the distance since the last average consumption reset. The total fuel used is calculated from the fuel consumption input. For an accurate calculation, drive more than 50 m (0.03 miles).

Pressing the DISP button for more than 1 second, when the average fuel economy is being displayed, clears the average fuel economy to zero (---).

If the vehicle speed exceeds 1 km/h after refueling more than 6 *l*, the average fuel consumption will be cleared to zero (---).

You can activate or deactivate the feature, resetting the average fuel economy after refueling more than 6 *l*.

Refer to "Vehicle Option" in this chapter.

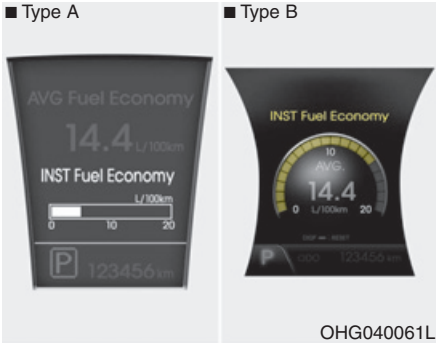

OHG040061L

Instant fuel economy (l/100 km or MPG)

This mode calculates the instant fuel consumption every 0.4 seconds from the driving distance and quantity of fuel injection.

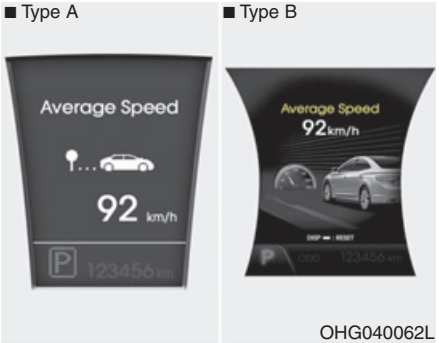

OHG040062L

Average speed (km/h or MPH)

This mode calculates the average speed of the vehicle since the last average speed reset.

Even if the vehicle is not in motion, the average speed keeps going while the engine is running.

Pressing the DISP button for more than 1 second, when the average speed is being displayed, clears the average speed to zero (---).

OHG040063L

Elapsed time

This mode indicates the total time traveled since the last driving time reset.

Even if the vehicle is not in motion, the driving time keeps going while the engine is running.

The meter's working range is from 00:00~99:59.

Pressing the DISP button for more than 1 second, when the driving time is being displayed, clears the driving time to zero (00:00).

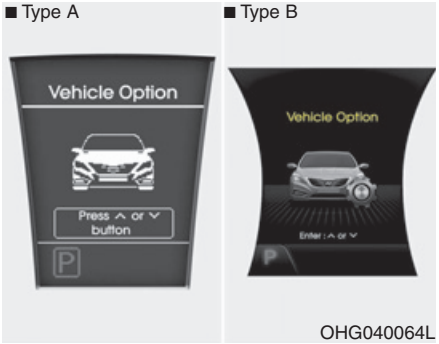

Vehicle option

1. When the vehicle is at a standstill, pressing the DISP button for more than 2 seconds with the ignition switch in the ON position or engine running, the LCD display on the cluster will change to the “Vehicle Option” group.
2. You can change the item by pressing the ∧ or ∨ button and choose an item by pressing the DISP button.

Auto door lock

Off - The auto door lock operation will be canceled.

Speed - All doors will be automatically locked when the vehicle speed exceeds 15 km/h (9.3 mph).

Shift Lever - All doors will be automatically locked if the shift lever is shifted from the P (Park) position to the R (Reverse), N (Neutral) or D (Drive) position.

Auto door unlock

Off - The auto door unlock operation will be canceled.

Key Out - All doors will be automatically unlocked when the ignition key is removed from ignition switch (or smart key is in the OFF position).

Shift Lever - All doors will be automatically unlocked if the shift lever is shifted to the P(Park) position.

Door - All doors will be automatically unlocked if the driver's door is unlocked.

Seat Easy Access (only for Driver Position Memory System equipped vehicle)

On - The driver's seat will automatically move forward or rearward for the driver to enter or exit the vehicle comfortably.

Off - The Seat Easy Access function will be inactivated.

Steering Easy Access (only for Driver Position Memory System equipped vehicle)

On - The steering wheel will automatically move away or toward the driver for the driver to enter or exit the vehicle comfortably.

Off - The Steering Easy Access function will be inactivated.

Headlamp Escort

On - The Headlamp Escort and Headlamp Welcome function will be activated.

Off - The Headlamp Escort and Headlamp Welcome function will be inactivated.

Welcome Light (if equipped)

On - When all the doors(and trunk) are locked and closed, if you approach the vehicle with a smart key in possession the puddle lamp and door handle lamp will come on for about 15 seconds.

Off - The Welcome Light function will be inactivated.

Welcome Sound

On - The Welcome Sound function will be activated.

Off - The Welcome Sound function will be inactivated.

Auto Triple Turn (One-touch triple turn signal)

On - The lane change signals will blink 3 times when the turn signal lever is moved slightly.

Off - The Auto Triple Turn function will be inactivated.

AVG fuel economy

Auto Reset - The average fuel economy will reset automatically when you drive after refueling.

Manual Reset - The average fuel economy will not reset automatically when you drive after refueling.

Ambient lighting

The brightness of the ambient light may be adjusted.

- 5 stage : Off / Level 1 / Level 2 / Level 3 / Level 4

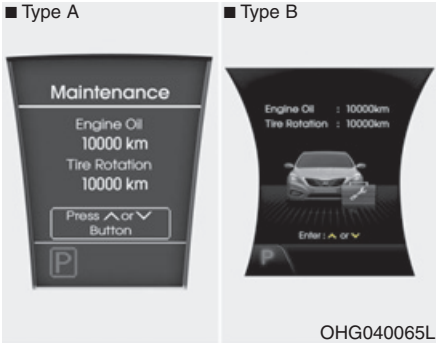

Maintenance system

The Maintenance system informs the driver when to replace engine oil and rotate tires.

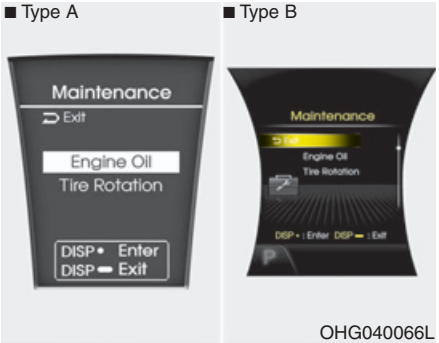

Maintenance

1. When the vehicle is at a standstill, pressing the DISP button for more than 2 seconds with the ignition switch in the ON position or engine running, the LCD display on the cluster will change to the "Maintenance" group.

You can move to an item by pressing the ∧ or ∨ button and select the item by pressing the DISP button.

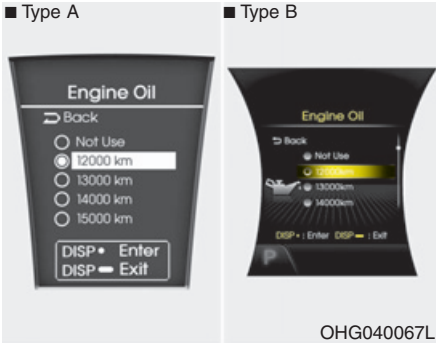

2. Select the desired maintenance schedule.
3. If finished, you can come out of the “Maintenance” group by pressing the DISP button for more than 2 seconds.

Warnings and indicators

All warning lights are checked by turning the ignition switch ON (do not start the engine). Any light that does not illuminate should be checked by an authorized HYUNDAI dealer.

After starting the engine, check to make sure that all warning lights are off. If any are still on, this indicates a situation that needs attention. When releasing the parking brake, the brake system warning light should go off. The fuel warning light will stay on if the fuel level is low.

Air bag warning light (if equipped)

This warning light will illuminate for approximately 6 seconds each time you turn the ignition switch to the ON position.

This light also comes on when the Supplemental Restraint System (SRS) is not working properly. If the SRS air bag warning light does not come on, or continuously remains on after operating for about 6 seconds when you turned the ignition switch to the ON position or started the engine, or if it comes on while driving, have the SRS inspected by an authorized HYUNDAI dealer.

Seat belt warning (if equipped)

As a reminder to the driver, the seat belt warning light will blink for approximately 6 seconds each time you turn the ignition switch ON regardless of belt fastening.

For details, refer to the “Seat belt” in section 3.

Turn signal indicator

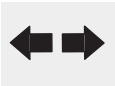

The blinking green arrows on the instrument panel show the direction indicated by the turn signals. If the arrow comes on but does not blink, blinks more rapidly than normal, or does not illuminate at all, a malfunction in the turn signal system is indicated. Your dealer should be consulted for repairs.

Front fog light indicator (if equipped)

This light comes on when the front fog lights are ON.

Rear fog light indicator (if equipped)

This indicator illuminates when the rear fog lights are ON.

High beam indicator

This indicator illuminates when the headlights are on and in the high beam position or when the turn signal lever is pulled into the Flash-to-Pass position.

Low beam indicator (if equipped)

This indicator illuminates when the headlights are on and in the low beam position.
When the high beam indicator is ON, the low bean indicator will turn off and low beam light remains on.

Tail light indicator

This indicator illuminates when the tail lights are on.

Engine oil pressure warning light

This warning light indicates the engine oil pressure is low.

If the warning light illuminates while driving:

1. Drive safely to the side of the road and stop.
2. With the engine off, check the engine oil level. If the level is low, add oil as required.

If the warning light remains on after adding oil or if oil is not available, call an authorized HYUNDAI dealer.

⚠ CAUTION

If the engine does not stop immediately after the engine oil pressure warning light is illuminated, severe damage could result.

⚠ CAUTION

If the oil pressure warning light stays on while the engine is running, serious engine damage may result. The oil pressure warning light comes on whenever there is insufficient oil pressure. In normal operation, it should come on when the ignition switch is turned on, then go out when the engine is started. If the oil pressure warning light stays on while the engine is running, there is a serious malfunction.

If this happens, stop the car as soon as it is safe to do so, turn off the engine and check the oil level. If the oil level is low, fill the engine oil to the proper level and start the engine again. If the light stays on with the engine running, turn the engine off immediately. In any instance where the oil light stays on when the engine is running, the engine should be checked by an authorized HYUNDAI dealer before the car is driven again.

Parking brake & brake fluid warning light

Parking brake warning

This light is illuminated when the parking brake is applied with the ignition switch in the START or ON position. The warning light should go off when the parking brake is released while the engine is running.

Low brake fluid level warning

If the warning light remains on, it may indicate that the brake fluid level in the reservoir is low.

If the warning light remains on:

1. Drive carefully to the nearest safe location and stop your vehicle.
2. With the engine stopped, check the brake fluid level immediately and add fluid as required. Then check all brake components for fluid leaks.
3. Do not drive the vehicle if leaks are found, the warning light remains on or the brakes do not operate properly. Have the vehicle towed to any authorized HYUNDAI dealer for a brake system inspection and necessary repairs.

Your vehicle is equipped with dual-diagonal braking systems. This means you still have braking on two wheels even if one of the dual systems should fail. With only one of the dual systems working, more than normal pedal travel and greater pedal pressure are required to stop the car. Also, the car will not stop in as short a distance with only a portion of the brake system working. If the brakes fail while you are driving, shift to a lower gear for additional engine braking and stop the car as soon as it is safe to do so.

To check bulb operation, check whether the parking brake and brake fluid warning light illuminates when the ignition switch is in the ON position.

⚠ WARNING

Driving the vehicle with a warning light on is dangerous. If the brake warning light remains on, have the brakes checked and repaired immediately by an authorized HYUNDAI dealer.

Anti-lock brake system (ABS) warning light (if equipped)

This light illuminates if the ignition switch is turned ON and goes off in approximately 3 seconds if the system is operating normally.

If the ABS warning light remains on, comes on while driving, or does not come on when the ignition switch is turned to the ON position, this indicates that there may be a malfunction with the ABS.

If this occurs, have your vehicle checked by an authorized HYUNDAI dealer as soon as possible. The normal braking system will still be operational, but without the assistance of the anti-lock brake system.

Electronic brake force distribution (EBD) system warning light

If two warning lights illuminate at the same time while driving, your vehicle may have a malfunction with the ABS and EBD system. In this case, your ABS and regular brake system may not work normally. Have the vehicle checked by an authorized HYUNDAI dealer as soon as possible.

⚠ WARNING

If both ABS and brake warning lights are on and stay on, your vehicle's brake system will not work normally during sudden braking. In this case, avoid high speed driving and abrupt braking. Have your vehicle checked by an authorized HYUNDAI dealer as soon as possible.

✻ NOTICE

If the ABS warning light or EBD warning light is on and stays on, the speedometer or odometer/tripmeter may not work. In this case, have your vehicle checked by an authorized HYUNDAI dealer as soon as possible.

Automatic transaxle shift indicator (if equipped)

The indicator displays which automatic transaxle shift lever is selected.

Low washer fluid level warning light (if equipped)

This warning light indicates the washer fluid reservoir is near empty. Refill the washer fluid as soon as possible.

Charging system warning light

This warning light indicates a malfunction of either the generator or electrical charging system.

If the warning light comes on while the vehicle is in motion:

1. Drive to the nearest safe location.
2. With the engine off, check the generator drive belt for looseness or breakage.
3. If the belt is adjusted properly, a problem exists somewhere in the electrical charging system. Have an authorized HYUNDAI dealer correct the problem as soon as possible.

Door ajar warning light

This warning light illuminates when a door is not closed securely.

Trunk lid open warning light

This warning light illuminates when a trunk lid is not closed securely with the ignition in any position.

Immobilizer indicator (if equipped)

Without smart key system

This light illuminates when the immobilizer key is inserted and turned to the ON position to start the engine.

At this time, you can start the engine. The light goes out after the engine is running.

If this light blinks when the ignition switch is in the ON position before starting the engine, have the system checked by an authorized HYUNDAI dealer.

With smart key system (if equipped)

If any of the following occurs in a vehicle equipped with the smart key, the immobilizer indicator illuminates, blinks or the light goes off.

- When the smart key is in the vehicle, if the ENGINE START/STOP button is turned to the ACC or ON position, the indicator will illuminate. However, when the smart key is not in the vehicle, if the ENGINE START/STOP button is depressed, the indicator will blink for a few minutes to indicate that you will not be able to start the engine.
- When the ENGINE START/STOP button is changed to the ON position and the indicator turns off after 2 seconds, the system may have a problem. Have the vehicle checked by an authorized HYUNDAI dealer.
- When the battery is weak, if the ENGINE START/STOP button is pressed, the indicator will blink and you will not be able to start the engine. However, you may still be able to start the engine by directly pressing the ENGINE START/STOP button with the smart key. If smart key system related parts have a problem, the indicator will blink.

Engine coolant temperature warning light (if equipped)

The warning light illuminates if the temperature of the engine coolant is above 125±2.5°C (257±4.5°F).

Do not continue driving with an overheated engine. If your vehicle overheats, refer to “Overheating” in section 6.

✻ NOTICE

If the engine coolant temperature warning light illuminates, it indicates overheating that may damage the engine.

Low fuel level warning light

This warning light indicates the fuel tank is nearly empty. When it comes on, you should add fuel as soon as possible. Driving with the fuel level warning light on or with the fuel level below “E” can cause the engine to misfire and damage the catalytic converter.

Malfunction indicator light (MIL) (check engine light)

This indicator light is part of the Engine Control System which monitors various emission control system components. If this light illuminates while driving, it indicates that a potential malfunction has been detected somewhere in the emission control system.

This light will also illuminate when the ignition switch is turned to the ON position, and will go out in a few seconds after the engine is started. If it illuminates while driving, or does not illuminate when the ignition switch is turned to the ON position, take your vehicle to your nearest authorized HYUNDAI dealer and have the system checked.

Generally, your vehicle will continue to be drivable, but have the system checked by an authorized HYUNDAI dealer promptly.

⚠ CAUTION

Prolonged driving with the Malfunction Indicator Light illuminated may cause damage to the emission control systems which could effect drivability and/or fuel economy.

⚠ CAUTION

If the Malfunction Indicator Light illuminates, potential catalytic converter damage is possible which could result in loss of engine power. Have the Engine Control System inspected as soon as possible by an authorized HYUNDAI dealer.

ESP (Electronic Stability Program) indicator (if equipped)

The ESP indicator will illuminate when the ignition switch is turned ON, but should go off after approximately 3 seconds. When the ESP is on, it monitors the driving conditions. Under normal driving conditions, the ESP indicator will remain off. When a slippery or low traction condition is encountered, the ESP will operate, and the ESP indicator will blink to indicate the ESP is operating.

But, if the ESP system malfunctions the indicator illuminates and stays on. Take your vehicle to an authorized HYUNDAI dealer and have the system checked.

ESP OFF indicator (if equipped)

The ESP OFF indicator will illuminate when the ignition switch is turned ON, but should go off after approximately 3 seconds. To switch to ESP OFF mode, press the ESP OFF button. The ESP OFF indicator will illuminate indicating the ESP is deactivated.

EPB (Electric Parking Brake) malfunction indicator (if equipped)

The EPB malfunction indicator will illuminate when the ignition switch is turned ON, but should go off after approximately 3 seconds. If the warning light does not come on, or continuously remains on take your vehicle to an authorized HYUNDAI dealer and have the system checked.

Also, the EPB malfunction indicator may illuminate when the ESP indicator comes on to indicate that the ESP is not working properly, but if this occurs, it does not indicate the EPB has malfunctioned.

AUTO HOLD indicator (if equipped)

If you press the AUTO HOLD switch, the AUTO HOLD indicator on the cluster comes on white. And when you stop the vehicle completely by pressing the brake pedal, the indicator changes from white to green.

If the AUTO HOLD malfunction indicator lights up yellow, the AUTO HOLD is not working properly. Take your vehicle to an authorized HYUNDAI dealer and have the system checked.

For more information, refer to “AUTO HOLD” in section 5.

Cruise indicator (if equipped)

CRUISE indicator

■ Type A

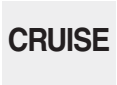

■ Type B

The indicator light illuminates when the cruise control system is enabled.

The cruise indicator light in the instrument cluster is illuminated when the cruise control ON-OFF button on the steering wheel is pushed.

The indicator light turns off when the cruise control ON-OFF button is pushed again. For more information about the use of cruise control, refer to “Cruise control system or Smart cruise control system” in section 5.

Cruise SET indicator

The indicator light illuminates when the cruise function switch (SET- or RES+) is ON. The cruise SET indicator light in the instrument cluster is illuminated when the cruise control switch (SET- or RES+) is pushed. The cruise SET indicator light does not illuminate when the cruise control switch (CANCEL) is pushed or the system is disengaged.

Smart cruise control indicator (if equipped)

SCC (Smart cruise control) malfunction indicator

The warning light illuminates when the vehicle to vehicle distance function does not operate properly.

Take your vehicle to an authorized HYUNDAI dealer and have the system checked.

SCC (Smart cruise control) sensor malfunction indicator

If the sensor or cover is stained with foreign matter such as snow, the indicator will illuminate. Remove the stains around the sensor by using a soft cloth.

For more information about the use of smart cruise control, refer to "Smart cruise control system" in section 5.

TPMS (Tire Pressure Monitoring System) indicator (if equipped)

Low tire pressure telltale / TPMS malfunction indicator

The low tire pressure telltale/TPMS malfunction indicator comes on for 3 seconds after the ignition switch is turned to the "ON" position.

The TPMS malfunction indicator will illuminate after it blinks for approximately 1 minute when there is a problem with the Tire Pressure Monitoring System.

If this occurs, have the system checked by an authorized HYUNDAI dealer as soon as possible.

For details, refer to the “TPMS” in section 6.

⚠ WARNING

Significantly low tire pressure makes the vehicle unstable and can contribute to loss of vehicle control and increased braking distances.

Continued driving on low pressure tires will cause the tires to overheat and fail.

⚠ WARNING - Safe stopping

- **The TPMS cannot alert you to severe and sudden tire damage caused by external factors.**
- **If you feel any vehicle instability, immediately take your foot off the accelerator, apply the brakes gradually and with light force, and slowly move to a safe position off the road.**

Overspeed warning (if equipped)

120 km/h

Overspeed warning light

If you drive with the speed of 120 km/h or more, the overspeed warning light will blink. This is to prevent you from driving your vehicle with overspeed.

Overspeed warning chime (if equipped)

If you drive with the speed of 120 km/h or more, the overspeed warning chime will sound for about 5 seconds. This is to prevent you from driving your vehicle with overspeed.

LCD display warning (if equipped)

Key is not in vehicle

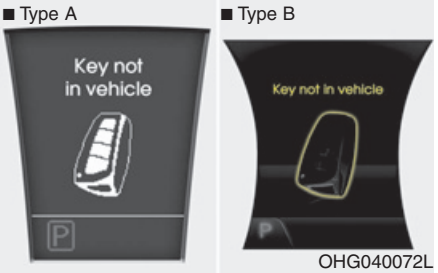

If the smart key is not in the vehicle and if any door is opened or closed with the ENGINE START/STOP button in the ACC, ON, or START position, the warning illuminates on the LCD display. Also, the chime sounds for 5 seconds when the smart key is not in the vehicle and the door is closed.

Always have the smart key with you.

Key not detected

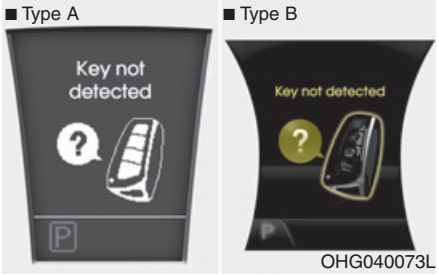

If the smart key is not in the vehicle or is not detected and you press the ENGINE START/STOP button, the warning illuminates on the LCD display for 10 seconds. Also, the immobilizer indicator blinks for 10 seconds.

Low key battery

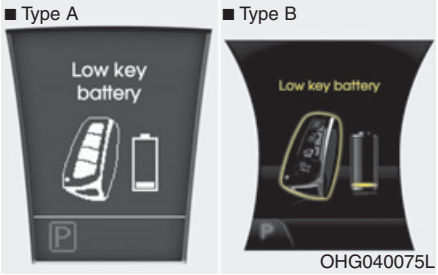

If the ENGINE START/STOP button changes to the OFF position when the smart key in the vehicle discharges, the warning illuminates on the LCD display for about 10 seconds. Also, the warning chime sounds once.

Replace the battery with a new one.

Press brake pedal to start engine

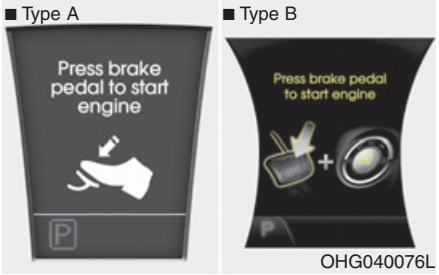

If the ENGINE START/STOP button changes to the ACC position twice by pressing the button repeatedly without depressing the brake pedal, the warning illuminates on the LCD display for about 10 seconds to indicate that you should depress the brake pedal to start the engine.

Shift to "P" position

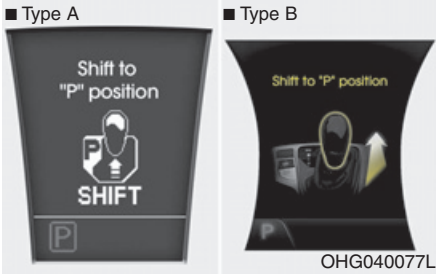

If you try to turn off the engine without the shift lever in the P (Park) position, the ENGINE START/STOP button changes to the ACC position. If the button is pressed once more it will change to the ON position. The warning illuminates on the LCD display for about 10 seconds to indicate that you should press the ENGINE START/STOP button with the shift lever in the P (Park) position to turn off the engine.

Also, the warning chime sounds for about 10 seconds. (if equipped)

Press start button again

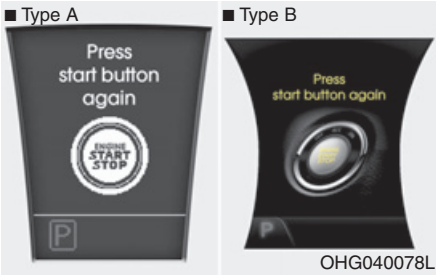

If you can not operate the ENGINE START/STOP button when there is a problem with the ENGINE START/STOP button system, the warning illuminates for 10 seconds and the chime sounds to indicate that you could start the engine by pressing the ENGINE START/STOP button once more.

The chime will stop if the ENGINE START/STOP button system works normally or the theft alarm system is armed.

If the warning illuminates each time you press the ENGINE START/STOP button, take your vehicle to an authorized HYUNDAI dealer and have the system checked.

Shift to "P" or "N" to start the engine

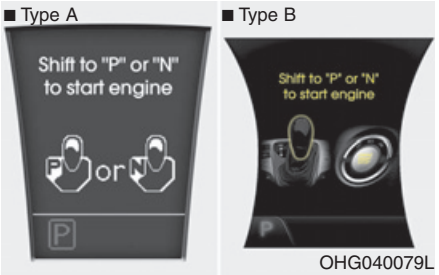

If you try to start the engine with the shift lever not in the P (Park) or N (Neutral) position, the warning illuminates for about 10 seconds on the LCD display.

You can also start the engine with the shift lever in the N (Neutral) position, but for your safety start the engine with the shift lever in the P (Park) position.

Press start button while turn steering

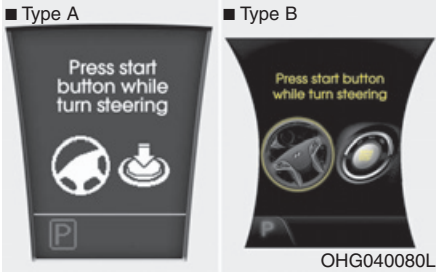

If the steering wheel does not unlock normally when the ENGINE START/STOP button is pressed, the warning illuminates for 10 seconds on the LCD display. Also, the warning chime sounds once and the ENGINE START/STOP button light blinks for 10 seconds.

When you are warned, press the ENGINE START/STOP button while turning the steering wheel right and left.

Check steering wheel lock

If the steering wheel does not lock normally when the ENGINE START/STOP button changes to the OFF position, the warning illuminates for 10 seconds on the LCD display. Also, the warning chime sounds for 3 seconds and the ENGINE START/STOP button light blinks for 10 seconds.

Please press start button with smart key

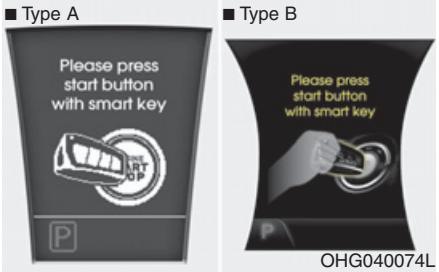

If you press the ENGINE START/ STOP button while the warning “Key is not detected” illuminates the warning “Please press the start button with smart key” illuminates for 10 seconds on the LCD display. Also, the immobilizer indicator blinks for 10 seconds.

Check stop lamp fuse

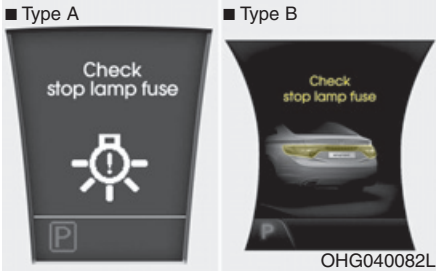

When the stop lamp fuse is disconnected, the warning illuminates for 10 seconds on the LCD display.

Replace the fuse with a new one. If that is not possible you can start the engine by pressing the ENGINE START/STOP button for 10 seconds in ACC.

Door /Trunk open

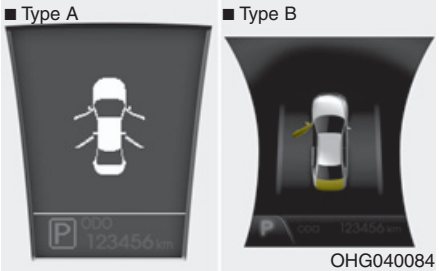

This indicator displays which door (or trunk) is opened.

Illumination

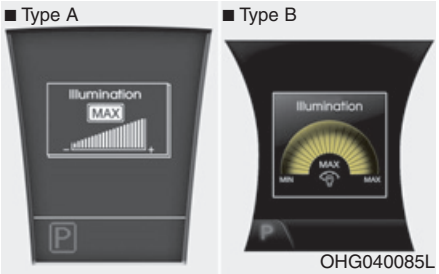

The illumination intensity of the instrument panel is shown when adjusting it with the illumination control switch.

Parking assist warning

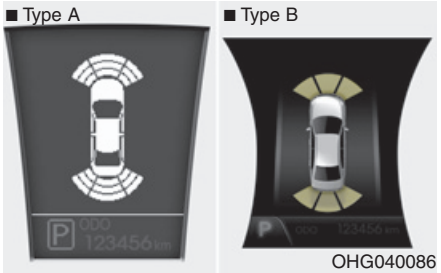

Displays the area an obstacle is detected while moving forward or rearward.

Low washer liquid

This warning light illuminates for 12 seconds when the washer fluid reservoir is nearly empty. Refill the washer fluid as soon as possible.

REAR PARKING ASSIST SYSTEM (IF EQUIPPED)

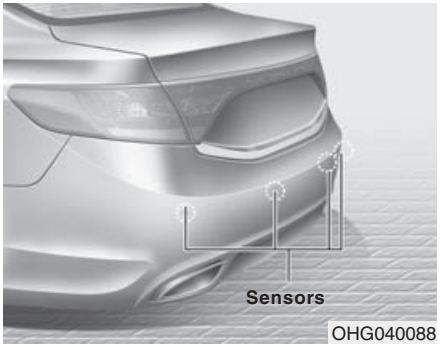

OHG040088

The rear parking assist system assists the driver during backward movement of the vehicle by chiming if any object is sensed within a distance of 120 cm (47 in.) behind the vehicle. This system is a supplemental system and it is not intended to nor does it replace the need for extreme care and attention of the driver. The sensing range and objects detectable by the back sensors are limited. Whenever backing-up, pay as much attention to what is behind you as you would in a vehicle without a rear parking assist system.

⚠ WARNING

The rear parking assist system is a supplementary function only. The operation of the rear parking assist system can be affected by several factors (including environmental conditions). It is the responsibility of the driver to always check the area behind the vehicle before and while backing up.

■ Type A

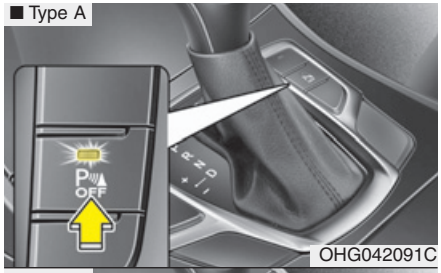

OHG042091C

■ Type B

OHG042192C

■ Type C

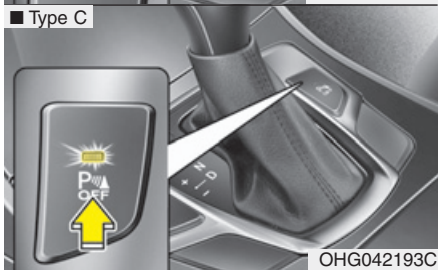

OHG042193C

Rear parking assist system OFF button (if equipped)

To turn off the rear parking assist system, push the button (the indicator light will illuminate).

Operation of the rear parking assist system

Operating condition

- This system will activate when backing up with the ignition switch ON.
- The sensing distance while the rear parking assist system is in operation is approximately 120 cm (47 in.).
- When more than two objects are sensed at the same time, the closest one will be recognized first.

Types of warning sound and indicator

Types of warning sound	Indicator	
	Type A	Type B
When an object is 120 cm to 81 cm (47 in. to 32 in.) from the rear bumper: Buzzer beeps intermittently.		
When an object is 80 cm to 41 cm (31 in. to 16 in.) from the rear bumper: Buzzer beeps more frequently.		
When an object is within 40 cm (15 in.) of the rear bumper: Buzzer sounds continuously.		

✻ NOTICE

- **The indicator may differ from the illustration according to the objects or sensors status.**
- **If the indicator blinks, have the system checked by an authorized HYUNDAI dealer.**
- **The actual indicator in the vehicle may be different from the illustration.**

Non-operational conditions of rear parking assist system

The rear parking assist system may not operate properly when:

1. Moisture is frozen to the sensor. (It will operate normally when the moisture has been cleared.)
2. The sensor is covered with foreign matter, such as snow or water, or the sensor cover is blocked. (It will operate normally when the material is removed or the sensor is no longer blocked.)
3. Driving on uneven road surfaces (unpaved roads, gravel, bumps, gradient).
4. Objects generating excessive noise (vehicle horns, loud motorcycle engines, or truck air brakes) are within range of the sensor.
5. Heavy rain or water spray exists.
6. Wireless transmitters or mobile phones are within range of the sensor.
7. The sensor is covered with snow.
8. Trailer towing

The detecting range may decrease when:

1. The sensor is stained with foreign matter such as snow or water. (The sensing range will return to normal when removed.)
2. Outside air temperature is extremely hot or cold.

The following objects may not be recognized by the sensor:

1. Sharp or slim objects such as ropes, chains or small poles.
2. Objects which tend to absorb the sensor frequency such as clothes, spongy material or snow.
3. Undetectable objects smaller than 1 m (40 in.) in height and narrower than 14 cm (6 in.) in diameter.

Rear parking assist system precautions

- The rear parking assist system may not sound sequentially depending on the speed and shapes of the objects detected.
- The rear parking assist system may malfunction if the vehicle bumper height or sensor installation has been modified or damaged. Any non-factory installed equipment or accessories may also interfere with the sensor performance.
- The sensor may not recognize objects less than 25 cm (9 in.) from the sensor, or it may sense an incorrect distance. Use caution.
- When the sensor is frozen or stained with snow, dirt, or water, the sensor may be inoperative until the stains are removed using a soft cloth.
- Do not push, scratch or strike the sensor. Sensor damage could occur.

✻ NOTICE

This system can only sense objects within the range and location of the sensors; It can not detect objects in other areas where sensors are not installed. Also, small or slim objects, such as poles or objects located between sensors may not be detected by the sensors.
Always visually check behind the vehicle when backing up.
Be sure to inform any drivers of the vehicle that may be unfamiliar with the system regarding the systems capabilities and limitations.

⚠ WARNING

Pay close attention when the vehicle is driven close to objects on the road, particularly pedestrians, and especially children. Be aware that some objects may not be detected by the sensors, due to the object's distance, size or material, all of which can limit the effectiveness of the sensor. Always perform a visual inspection to make sure the vehicle is clear of all obstructions before moving the vehicle in any direction.

Self-diagnosis

When you shift the gear to the R (Reverse) position and if one or more of the below occurs you may have a malfunction in the rear parking assist system.

- You don't hear an audible warning sound or if the buzzer sounds intermittently.
- is displayed. (if equipped)
  (blinks)

If this occurs, have your vehicle checked by an authorized HYUNDAI dealer as soon as possible.

⚠ WARNING

Your new vehicle warranty does not cover any accidents or damage to the vehicle or injuries to its occupants due to a rear parking assist system malfunction. Always drive safely and cautiously.

PARKING ASSIST SYSTEM (IF EQUIPPED)

■ Front

OHG042089C

■ Rear

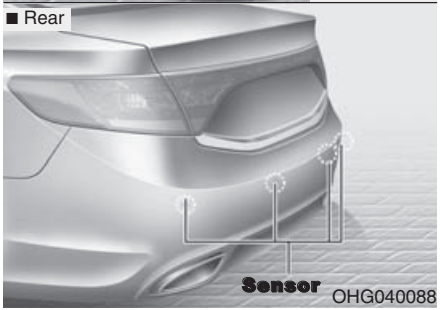

OHG040088

The parking assist system assists the driver during movement of the vehicle by chiming if any object is sensed within the distance of 100 cm (39 in.) in front and 120 cm (47 in.) behind the vehicle. This system is a supplemental system and it is not intended to nor does it replace the need for extreme care and attention of the driver.

The sensing range and objects detectable by the sensors are limited. Whenever moving pay as much attention to what is in front and behind of you as you would in a vehicle without a parking assist system.

⚠ WARNING

The parking assist system should only be considered as a supplementary function. The driver must check the front and rear view. The operational function of the parking assist system can be affected by many factors and conditions of the surroundings, so the responsibility rests always with the driver.

■ Type A

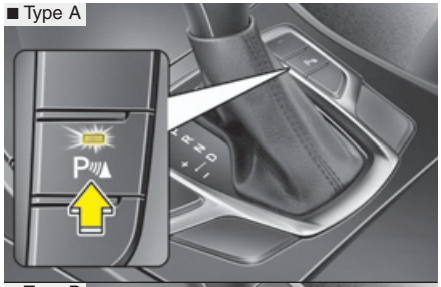

■ Type B

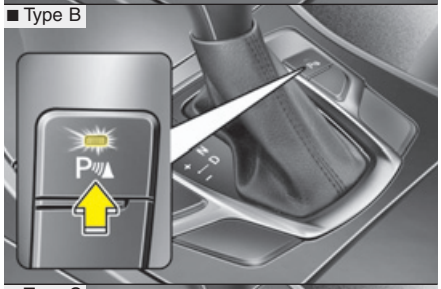

■ Type C

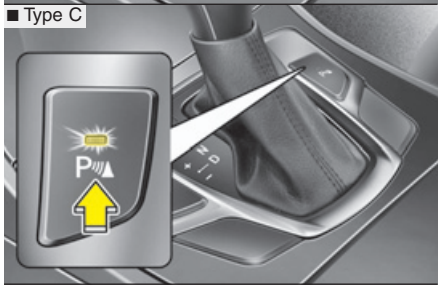

OHG040091/OHG040192L/OHG040193L

Operation of the parking assist system

Operating condition

- This system activates when the parking assist button is pressed with the ignition switch ON.
- The parking assist button turns on automatically and activates the parking assist system when you shift the gear to the R (Reverse) position. It will turn off automatically when you shift out of R (Reverse) and drive above 20 km/h. However, the parking assist system will not activated even if the vehicle speed is below 20 km/h again. To activate the system again, press the button.
- The sensing distance while backing up is approximately 100 cm (39 in.) when you are driving less than 10 km/h.
- The sensing distance while moving forward is approximately 60 cm (24 in.) when you are driving less than 10 km/h.
- When more than two objects are sensed at the same time, the closest one will be recognized first.

✻ NOTICE

It may not operate if it's distance from the object is already less than approximately 25 cm when the system is ON.

Type of warning indicator and sound

: with Warning sound

Distance from object		Warning indicator		Warning sound
		When driving forward	When driving rearward	
100cm~61cm	Front		-	Buzzer beeps intermittently
120cm~61cm	Rear	-		Buzzer beeps intermittently
60cm~31cm	Front			Buzzer beeps frequently
	Rear	-		Buzzer beeps frequently
30cm	Front			Buzzer sounds continuously
	Rear	-		Buzzer sounds continuously

✻ NOTICE

- **The actual warning sound and indicator may differ from the illustration according to objects or sensor status.**
- **Do not wash the vehicle's sensor with high pressure water.**

⚠ **CAUTION**

- ***This system can only sense objects within the range and location of the sensors;***

  It can not detect objects in other areas where sensors are not installed. Also, small or slim objects, such as poles or objects located between sensors may not be detected by the sensors.

  Always visually check behind the vehicle when backing up.
- ***Be sure to inform any drivers of the vehicle that may be unfamiliar with the system regarding the systems capabilities and limitations.***

Non-operational conditions of parking assist system

Parking assist system may not operate normally when:

1. Moisture is frozen on the sensor. (It will operate normally when moisture melts.)
2. Sensor is covered with foreign matter, such as snow or water, or the sensor cover is blocked. (It will operate normally when the material is removed or the sensor is no longer blocked.)
3. Sensor is stained with foreign matter such as snow or water. (Sensing range will return to normal when removed.)
4. The parking assist button is off.

There is a possibility of parking assist system malfunction when:

1. Driving on uneven road surfaces such as unpaved roads, gravel, bumps, or gradient.
2. Objects generating excessive noise such as vehicle horns, loud motorcycle engines, or truck air brakes can interfere with the sensor.
3. Heavy rain or water spray.
4. Wireless transmitters or mobile phones present near the sensor.
5. Sensor is covered with snow.

Detecting range may decrease when:

1. Outside air temperature is extremely hot or cold.
2. Undetectable objects smaller than 1 m and narrower than 14 cm in diameter.

The following objects may not be recognized by the sensor:

1. Sharp or slim objects such as ropes, chains or small poles.
2. Objects, which tend to absorb sensor frequency such as clothes, spongy material or snow.

✻ NOTICE

1. The warning may not sound sequentially depending on the speed and shapes of the objects detected.
2. The parking assist system may malfunction if the vehicle bumper height or sensor installation has been modified. Any non-factory installed equipment or accessories may also interfere with the sensor performance.
3. Sensor may not recognize objects less than 30 cm from the sensor, or it may sense an incorrect distance. Use with caution.
4. When the sensor is frozen or stained with snow or water, the sensor may be inoperative until the stains are removed using a soft cloth.
5. Do not push, scratch or strike the sensor with any hard objects that could damage the surface of the sensor. Sensor damage could occur.

✻ NOTICE

This system can only sense objects within the range and location of the sensors, it can not detect objects in other areas where sensors are not installed. Also, small or slim objects, or objects located between sensors may not be detected.
Always visually check in front and behind the vehicle when driving.
Be sure to inform any drivers in the vehicle that may be unfamiliar with the system regarding the systems capabilities and limitations.

⚠ WARNING

Pay close attention when the vehicle is driven close to objects on the road, particularly pedestrians, and especially children. Be aware that some objects may not be detected by the sensors, due to the objects distance, size or material, all of which can limit the effectiveness of the sensor. Always perform a visual inspection to make sure the vehicle is clear of all obstructions before moving the vehicle in any direction.

Self-diagnosis

When you shift the gear to the R (Reverse) position and if one or more of the below occurs you may have a malfunction in the rear parking assist system.

- You don't hear an audible warning sound or if the buzzer sounds intermittently.
- is displayed. (if equipped)

(blinks)

If this occurs, have your vehicle checked by an authorized HYUNDAI dealer as soon as possible.

⚠ WARNING

Your new vehicle warranty does not cover any accidents or damage to the vehicle or injuries to its occupants related to a parking assist system. Always drive safely and cautiously.

REARVIEW CAMERA (IF EQUIPPED)

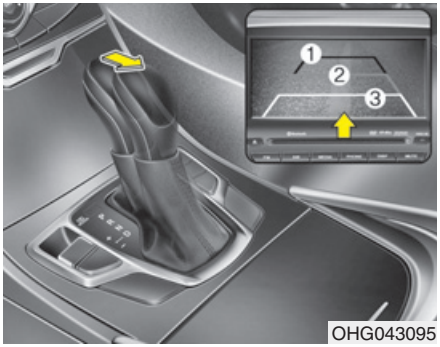

OHG043095

The rearview camera will activate when the back-up light is ON with the ignition switch ON and the shift lever in the R position.

This system is a supplemental system that shows behind the vehicle through the AV monitor while backing-up.

⚠ WARNING

- **This system is a supplementary function only. It is the responsibility of the driver to always check the inside/outside rearview mirror and the area behind the vehicle before and while backing up because there is a dead zone that can't be seen through the camera.**
- **Always keep the camera lens clean. If the lens is covered with foreign matter, the camera may not operate normally.**

✻ NOTICE

The rearview camera may not operate normally, when you drive in the extremely high or low temperature area. (operating temperature: -30°C ~ 75°C (-22°F ~ 167°F))

HAZARD WARNING FLASHER

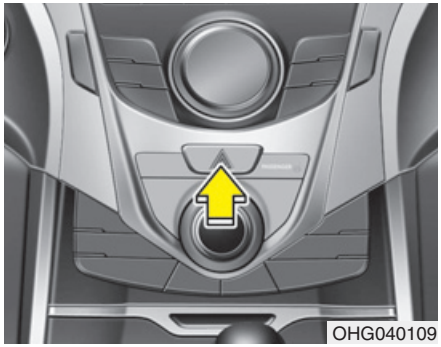
OHG040109

The hazard warning flasher should be used whenever you find it necessary to stop the car in a hazardous location. When you must make such an emergency stop, always pull off the road as far as possible.

The hazard warning lights are turned on by pushing in the hazard switch. This causes all turn signal lights to blink. The hazard warning lights will operate even though the key is not in the ignition switch.

To turn the hazard warning lights off, push the switch a second time.

LIGHTING

Battery saver function

- The purpose of this feature is to prevent the battery from being discharged. The system automatically turns off the parking lights when the driver removes the ignition key (smart key: turns off the engine) and opens the driver-side door.
- With this feature, the parking lights will be turned off automatically if the driver parks on the side of road at night.

  If necessary, to keep the lights on when the ignition key is removed, (smart key: turns off the engine) perform the following:

  1) Open the driver-side door.
  2) Turn the parking lights OFF and ON again using the light switch on the steering column.

⚠ CAUTION

If the driver gets out of the vehicle through other doors, the battery saver function does not operate.

Therefore, it causes the battery to be discharged. In this case, make sure to turn off the lamp before getting out of the vehicle.

Headlight escort function (if equipped)

If you turn the ignition switch to the ACC or OFF position with the headlights ON, the headlights (and/or tail lights) remain on for about 5 minutes. However, if the driver's door is opened and closed, the headlights are turned off after 15 seconds.

The headlights can be turned off by pressing the lock button on the transmitter (or smart key) twice or turning the light switch to the OFF or parking light position.

Headlight welcome function

When the headlight is ON or AUTO position and all doors (and trunk) are closed and locked, if you press the door unlock button on the transmitter (or the smart key), the headlights will come on for about 15 seconds. At this time, if you press the door lock or unlock button, the headlights will turn off immediately.

OHG040110

Lighting control

The light switch has a Headlight and a Parking light position.

To operate the lights, turn the knob at the end of the control lever to one of the following positions:

(1) OFF position
(2) Parking light position
(3) Headlight position
(4) Auto light position (if equipped)

OHG040111

Parking light position ( )

When the light switch is in the parking light position, the tail, license and instrument panel lights are ON and the tail light indicator is ON. (if equipped)

OHG040112

Headlight position ( )

When the light switch is in the headlight position, the head, tail and license lights are ON.

✻ NOTICE

The ignition switch must be in the ON position to turn on the headlights.

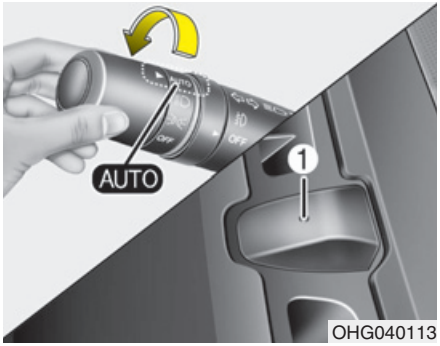

OHG040113

Auto light position (if equipped)

When the light switch is in the AUTO light position, the taillights and headlights will be turned ON or OFF automatically depending on the amount of light outside the vehicle.

⚠ CAUTION

- ***Never place anything over sensor (1) located on the instrument panel. This will ensure better auto-light system control.***
- ***Don't clean the sensor using a window cleaner. The cleaner may leave a light film which could interfere with sensor operation.***
- ***If your vehicle has window tint or other types of metallic coating on the front windshield, the Auto light system may not work properly.***

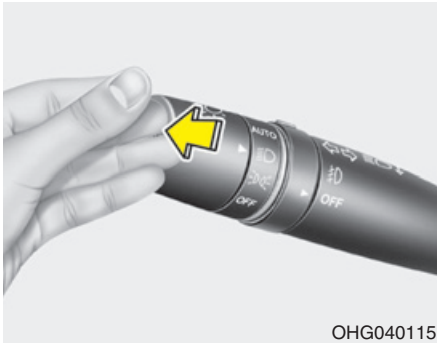
OHG040115

High beam operation

To turn on the high beam headlights, push the lever away from you. Pull it back for low beams.

The high beam indicator will light when the headlight high beams are switched on.

To prevent the battery from being discharged, do not leave the lights on for a prolonged time while the engine is not running.

⚠ WARNING

Do not use high beam when there are other vehicles. Using high beam could obstruct the other driver's vision.

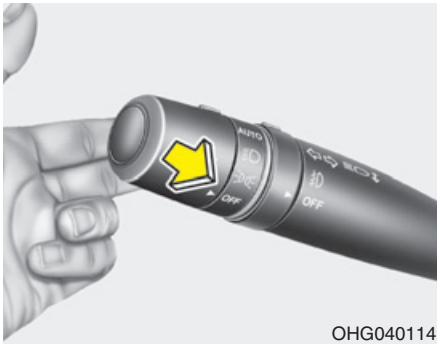

OHG040114

To flash the headlights, pull the lever towards you. It will return to the normal (low beam) position when released. The headlight switch does not need to be on to use this flashing feature.

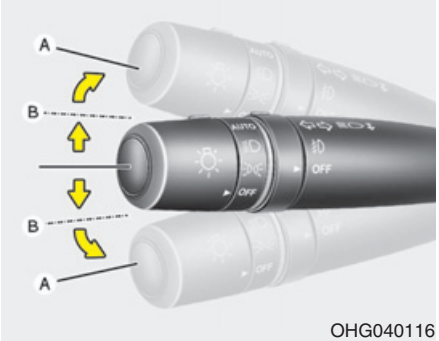

OHG040116

Turn signals and lane change signals

The ignition switch must be on for the turn signals to function. To turn on the turn signals, move the lever up or down (A). Green arrow indicators on the instrument panel indicate which turn signal is operating. They will self-cancel after a turn is completed. If the indicator continues to flash after a turn, manually return the lever to the OFF position.

To signal a lane change, move the turn signal lever slightly and hold it in position (B). The lever will return to the OFF position when released.

If an indicator stays on and does not flash or if it flashes abnormally, one of the turn signal bulbs may be burned out and will require replacement.

One-touch triple turn signal (if equipped)

To activate an one-touch triple turn signal move the turn signal lever slightly and then release it. The lane change signals will blink 3 times.

You can activate or deactivate this feature. Refer to "Vehicle Option" in this chapter.

✻ NOTICE

If an indicator flash is abnormally quick or slow, a bulb may be burned out or have a poor electrical connection in the circuit.

OHG040117

Front fog light (if equipped)

Fog lights are used to provide improved visibility and avoid accidents when visibility is poor due to fog, rain or snow etc. The fog lights will turn on when fog light switch (1) is turned to ON after the parking light is turned on.

To turn off the fog lights, turn the switch to OFF.

⚠ CAUTION

When in operation, the fog lights consume large amounts of vehicle electrical power. Only use the fog lights when visibility is poor or unnecessary battery and generator drain could occur.

OHG041190L

Rear fog light (if equipped)

To turn the rear fog lights on, turn the headlight switch to the headlight on position and turn the rear fog light switch (1) to the on position.

Also, the rear fog lights turn on when the rear fog light switch is turned on after the front fog light switch is turned on and the headlight switch is in the parklight position.

To turn the rear fog lights off, turn the rear fog light switch to the on position again or turn the headlight switch off.

✻ NOTICE

To turn on the rear fog light switch, the ignition switch must be in the ON position.

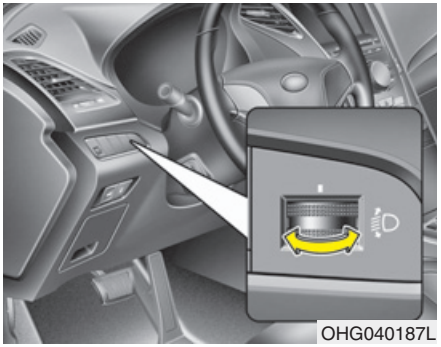
OHG040187L

Headlight leveling device (if equipped)

Manual type

To adjust the headlight beam level according to the number of passengers and loading weight in the luggage area, turn the beam leveling switch.

The higher the number of the switch position, the lower the headlight beam level. Always keep the headlight beam at the proper leveling position, or headlights may dazzle other road users.

Listed below are the examples of proper switch settings. For loading conditions other than those listed below, adjust the switch position so that the beam level may be the nearest as the condition obtained according to the list.

Loading condition	Switch position
Driver only	0
Driver + Front passenger	0
Full passengers	1
Full passengers + Maximum permissible loading	2
Driver + Maximum permissible loading	3

Automatic type

It automatically adjusts the headlight beam level according to the number of passengers and loading weight in the luggage area.

And it offers proper headlight beam under various conditions.

⚠ WARNING

If it does not work properly even though your car is inclined backward according to passenger's posture, or the headlight beam is irradiated to the high or low position, have your vehicle inspected by an authorized HYUNDAI dealer.

Do not attempt to inspect or replace the wiring yourself.

Headlight washer (if equipped)

If your vehicle is equipped with the headlight washer it will be operating at the same time when you operate the windshield washer. It will operate when the headlight switch is in the first or second position and the ignition switch or ENGINE START/STOP button is in the ON position.

The washer fluid will be sprayed on to the headlights.

✻ NOTICE

- **Check the headlight washers periodically to confirm that the washer fluid is being sprayed properly onto the headlight lenses.**
- **The headlight washer can be operated 15 minutes after being operated last time.**

WIPERS AND WASHERS

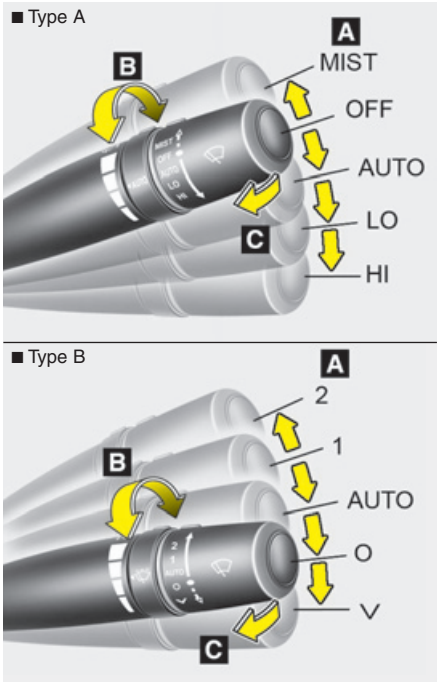

OHG040118/OHG040118L

Windshield wiper/washer

A : Wiper speed control

- MIST / ∨ – Single wipe
- OFF / O – Off
- INT (---) / AUTO – Intermittent wipe/ Auto control wipe (if equipped)
- LO / 1 – Normal wiper speed
- HI / 2 – Fast wiper speed

B : Intermittent or Auto control wipe time adjustment

C : Wash with brief wipes

Windshield wipers

Operates as follows when the ignition switch is turned ON.

MIST / ∨ : For a single wiping cycle, move the lever to this (∨ / MIST) position and release it with the lever in the OFF position. The wipers will operate continuously if the lever is held in this position.

OFF / O : Wiper is not in operation.

INT / --- : Wiper operates intermittently at the same wiping intervals. Use this mode in a light rain or mist. To vary the speed setting, turn the speed control knob.

LO / 1 : Normal wiper speed

HI / 2 : Fast wiper speed

✻ NOTICE

If there is heavy accumulation of snow or ice on the windshield, defrost the windshield for about 10 minutes, or until the snow and/or ice is removed before using the windshield wipers to ensure proper operation.

If you do not remove the snow and/or ice before using the wiper and washer, it may damage the wiper and washer system.

■ Type A

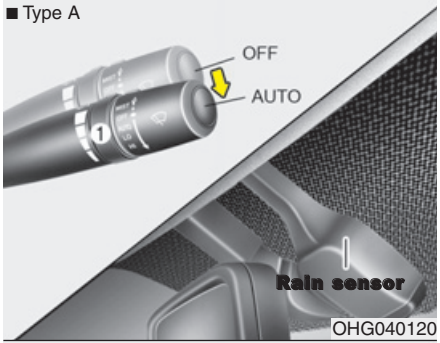

OHG040120

■ Type B

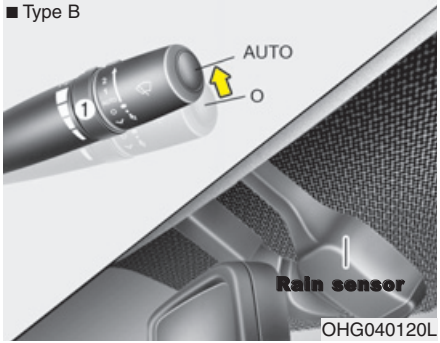

OHG040120L

Auto control (if equipped)

The rain sensor located on the upper end of the windshield glass senses the amount of rainfall and controls the wiping cycle for the proper interval. The more it rains, the faster the wiper operates. When the rain stops, the wiper stops.

To vary the speed setting, turn the speed control knob (1).

If the wiper switch is set in AUTO mode when the ignition switch is ON, the wiper will operate once to perform a self-check of the system. Set the wiper to OFF (O) position when the wiper is not in use.

⚠ CAUTION

When the ignition switch is ON and the windshield wiper switch is placed in the AUTO mode, use caution in the following situations to avoid any injury to the hands or other parts of the body:

- ***Do not touch the upper end of the windshield glass facing the rain sensor.***
- ***Do not wipe the upper end of the windshield glass with a damp or wet cloth.***
- ***Do not put pressure on the windshield glass.***

⚠ CAUTION

When washing the vehicle, set the wiper switch in the OFF (O) position to stop the auto wiper operation.

The wiper may operate and be damaged if the switch is set in the AUTO mode while washing the vehicle.

Do not remove the sensor cover located on the upper end of the passenger side windshield glass. Damage to system parts could occur and may not be covered by your vehicle warranty.

When starting the vehicle in winter, set the wiper switch in the OFF (O) position. Otherwise, wipers may operate and ice may damage the windshield wiper blades. Always remove all snow and ice and defrost the windshield properly prior to operating the windshield wipers.

■ Type A

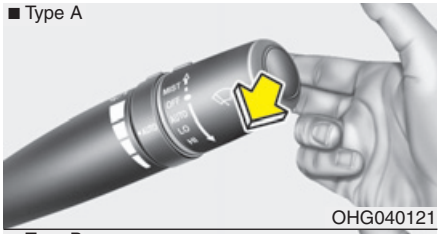

OHG040121

■ Type B

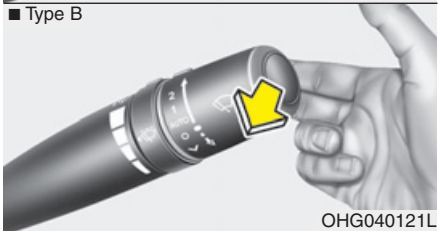

OHG040121L

Windshield washers

In the OFF (O) position, pull the lever gently toward you to spray washer fluid on the windshield and to run the wipers 1-3 cycles.

Use this function when the windshield is dirty.

The spray and wiper operation will continue until you release the lever.

If the washer does not work, check the washer fluid level. If the fluid level is not sufficient, you will need to add appropriate non-abrasive windshield washer fluid to the washer reservoir.

The reservoir filler neck is located in the front of the engine compartment on the passenger side.

⚠ CAUTION

To prevent possible damage to the washer pump, do not operate the washer when the fluid reservoir is empty.

⚠ WARNING

Do not use the washer in freezing temperatures without first warming the windshield with the defrosters; the washer solution could freeze on contact with the windshield and obscure your vision.

⚠ CAUTION

- ***To prevent possible damage to the wipers or windshield, do not operate the wipers when the windshield is dry.***
- ***To prevent damage to the wiper blades, do not use gasoline, kerosene, paint thinner, or other solvents on or near them.***
- ***To prevent damage to the wiper arms and other components, do not attempt to move the wipers manually.***
- ***To prevent possible damage to the wipers and washer system, use anti-freezing washer fluids in the winter season or cold weather.***

INTERIOR LIGHT

⚠ CAUTION

Do not use the interior lights for extended periods when the engine is not running.

It may cause battery discharge.

⚠ WARNING

Do not use the interior lights when driving in the dark. Accidents could happen because the view may be obscured by interior lights.

Automatic turn off function (if equipped)

The interior lights automatically turn off approximately 20 minutes after the ignition switch is turned off.

If your vehicle is equipped with the theft alarm system, the interior lights automatically turns off approximately 5 seconds after the system is in the armed stage.

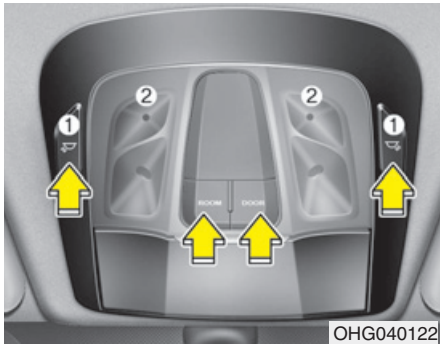

OHG040122

Map lamp

- , : Press the switch to turn the map lamp on or off. This light produces a spot beam for convenient use as a map lamp at night or as a personal lamp for the driver and the front passenger.
- DOOR : In the DOOR position, the map lamp and the room lamp come on when any door is opened regardless of the ignition switch position. When doors are unlocked by the transmitter (or smart key), the map lamp and the room lamp come on for approximately 30 seconds as long as any door is not open.

  The map lamp and the room lamp goes out gradually after approximately 30 seconds if the door is closed. However, if the ignition switch is ON or all doors are locked, the map lamp and the room lamp will turn off immediately. If a door is opened with the ignition switch in the ACC or LOCK position, the map lamp and the room lamp stays on for about 20 minutes. However, if a door is opened with the ignition switch in the ON position, the map lamp and the room lamp stays on continuously.

- OFF : The lights turn off even if a door is opened.
- ROOM : The map lamp and the room lamp stay on at all times.

■ Type A

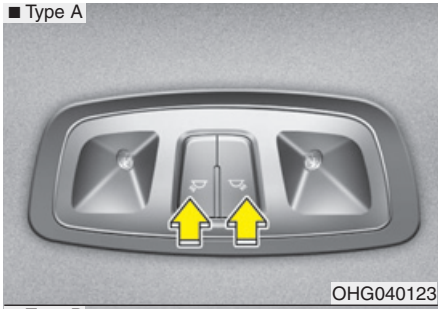

OHG040123

■ Type B

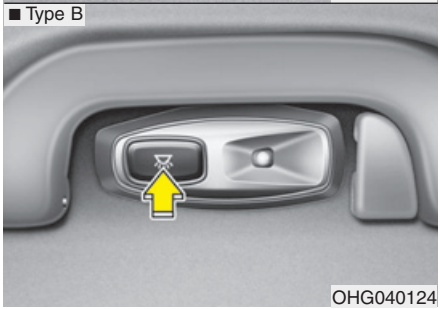

OHG040124

Room lamp

To turn the room lamp push the switch or lens.

⚠ CAUTION

Do not leave the lamp switches on for an extended period of time when the vehicle is not running.

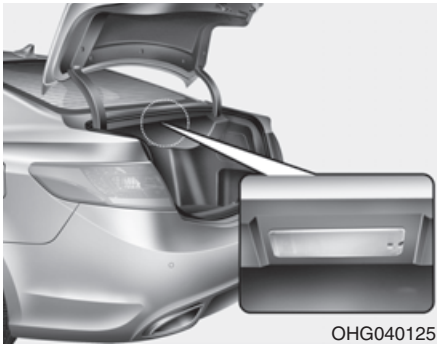

OHG040125

Trunk room lamp

The trunk room lamp comes on for 20 minutes when the trunk is opened.

⚠ CAUTION

To prevent unnecessary charging system drain, close the trunk lid securely after using the trunk room.

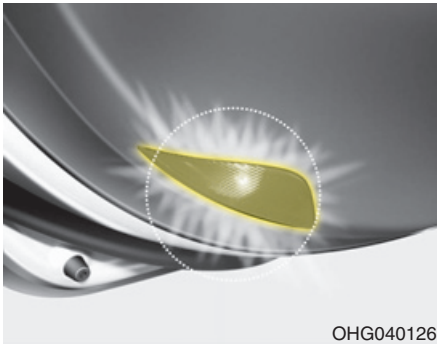

Door courtesy lamp (if equipped)

The door courtesy lamp comes ON when the door is opened to assist entering or exiting the vehicle. It also serves as a warning to passing vehicles that the vehicle door is open.

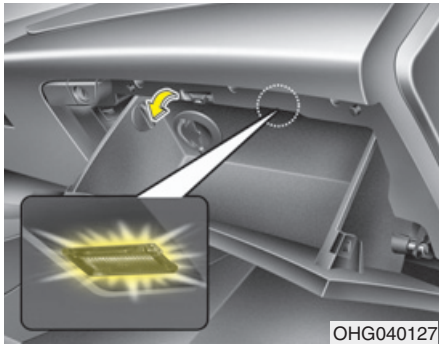

Glove box lamp

The glove box lamp comes on when the glove box is opened.

The parking lights or headlights must be ON for the glove box lamp to function.

⚠ CAUTION

To prevent unnecessary charging system drain, close the glove box securely after using the glove box.

Vanity mirror lamp

Opening the lid of the vanity mirror will automatically turn on the mirror light.

WELCOME SYSTEM (IF EQUIPPED)

OHG040129

Welcome light (if equipped)

Puddle lamp

When all the doors (and trunk) are locked and closed, the puddle lamp will come on for about 15 seconds if any of the below is performed.

- Without smart key system
  - When the door unlock button is pressed on the transmitter.
- With the smart key system
  - When the door unlock button is pressed on the smart key.
  - When the button of the outside door handle is pressed.
  - When the vehicle is approached with the smart key in possession.

Also, if the outside rearview mirror folding switch is in the AUTO position, the outside rearview mirror will unfold automatically.

Door handle lamp

When all the doors (and trunk) are locked and closed, the door handle lamp will come on for about 15 seconds if any of the below is performed.

- With the smart key system
  - When the door unlock button is pressed on the smart key.
  - When the button of the outside door handle is pressed.
  - When the vehicle is approached with the smart key in possession.

Escort welcome (if equipped)

When the headlight(light switch in the headlight or AUTO position) is on and all doors (and trunk) are locked and closed, the position light and headlight will come on for 15 seconds if/or any of the below is performed.

- Without smart key system
  - When the door unlock button is pressed on the transmitter.
- With the smart key system
  - When the door unlock button is pressed on the smart key.

At this time, if you press the door lock or unlock button, the position light and headlight will turn off immediately.

Interior light

When the interior light switch is in the DOOR position and all doors (and trunk) are locked and closed, the room lamp will come on for 30 seconds if any of the below is performed.

- Without smart key system
  - When the door unlock button is pressed on the transmitter.
- With the smart key system
  - When the door unlock button is pressed on the smart key.
  - When the button of the outside door handle is pressed.

At this time, if you press the door lock or unlock button, the room lamp will turn off immediately.

You can activate or deactivate this feature. Refer to "Vehicle Option" in this chapter.

DEFROSTER

⚠ CAUTION

To prevent damage to the conductors bonded to the inside surface of the rear window, never use sharp instruments or window cleaners containing abrasives to clean the window.

✻ NOTICE

If you want to defrost and defog the front windshield, refer to "Windshield defrosting and defogging" in this section.

OHG040130

Rear window defroster

The defroster heats the window to remove frost, fog and thin ice from the rear window, while the engine is running.

To activate the rear window defroster, press the rear window defroster button located in the center facia switch panel.

The indicator on the rear window defroster button illuminates when the defroster is ON.

If there is heavy accumulation of snow on the rear window, brush it off before operating the rear defroster.

The rear window defroster automatically turns off after approximately 20 minutes or when the ignition switch is turned off. To turn off the defroster, press the rear window defroster button again.

Outside rearview mirror defroster (if equipped)

If your vehicle is equipped with the outside rearview mirror defrosters, they will operate at the same time you turn on the rear window defroster.

Front wiper deicer (if equipped)

If your vehicle is equipped with the front wiper deicer, it will operate at the same time you operate the rear window defroster.

MANUAL CLIMATE CONTROL SYSTEM

1. Air conditioning button
2. Front windshield defroster button
3. Temperature control knob
4. Rear window defroster button
5. Air intake control button
6. Mode selection switch
7. Fan speed control switch
8. OFF button

OHG040131

⚠ CAUTION

Operating the blower when the ignition switch is in the ON position could cause the battery to discharge. Operate the blower when the engine is running.

Heating and air conditioning

1. Start the engine.
2. Set the mode to the desired position.

To improve the effectiveness of heating and cooling;

- Heating:
- Cooling:

3. Set the temperature control to the desired position.
4. Set the air intake control to the outside (fresh) air position.
5. Set the fan speed control to the desired speed.
6. If air conditioning is desired, turn the air conditioning system on.

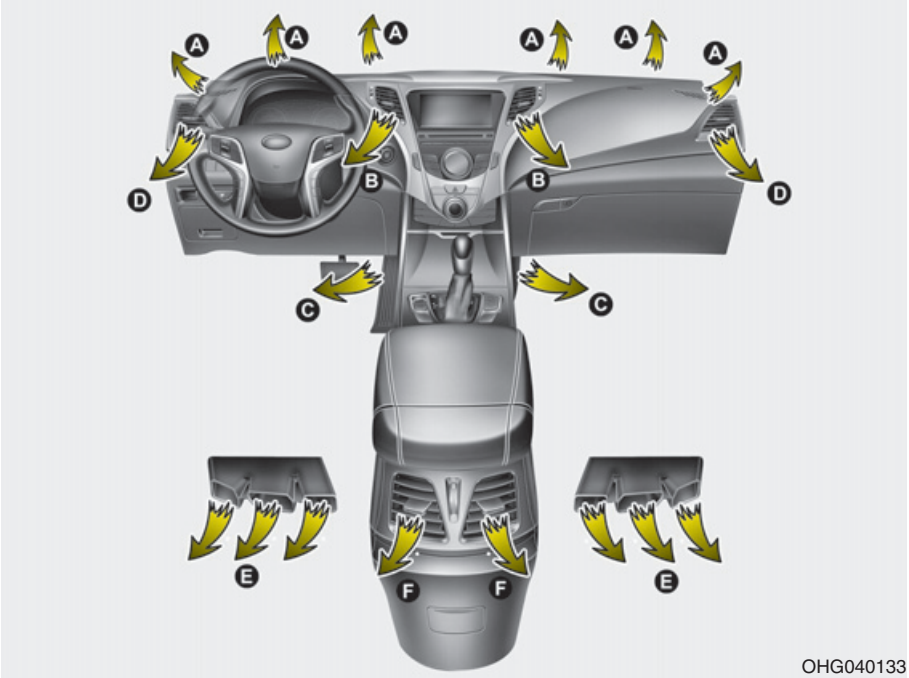

OHG040133

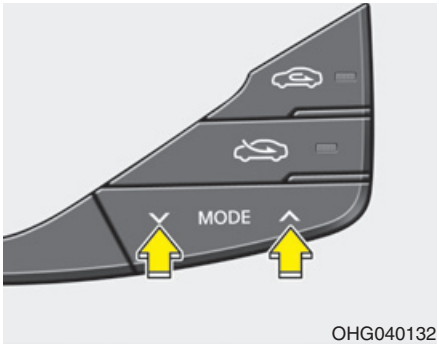

OHG040132

Mode selection

The mode selection switch controls the direction of the air flow through the ventilation system.

The air flow outlet port is converted as follows:

Face-Level (B, C, D, E, F)

Air flow is directed toward the upper body and face. Additionally, each outlet can be controlled to direct the air discharged from the outlet.

Bi-Level (B, C, D, E, F)

Air flow is directed towards the face and the floor.

Floor-Level (A, C, D, E)

Most of the air flow is directed to the floor, with a small amount of air directed to the windshield and side window defrosters.

Floor/Defrost-Level (A, C, D, E)

Most of the air flow is directed to the floor and the windshield with a small amount directed to the side window defrosters.

Defrost-Level (A, D)

Most of the air flow is directed to the windshield with a small amount of air directed to the side window defrosters.

OHG040134

MAX A/C-Level (B, C, D, E, F)

To select the MAX A/C, turn the temperature knob to the extreme left.

Air flow is directed toward the upper body and face.

In this mode, the air conditioning and the recirculated air position will be selected automatically.

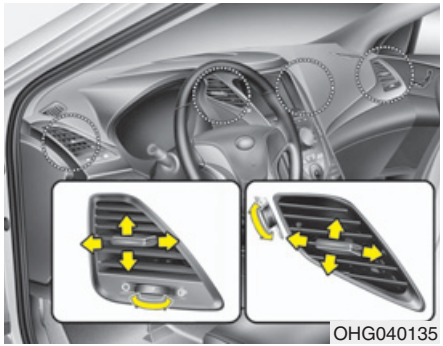
OHG040135

Instrument panel vents

The outlet vents can be opened or closed separately using the thumbwheel.

Also, you can adjust the direction of air delivery from these vents using the vent control lever as shown.

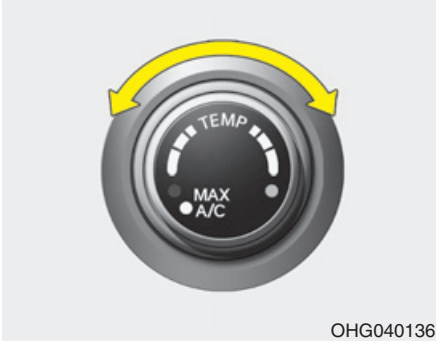

OHG040136

Temperature control

The temperature control knob allows you to control the temperature of the air flowing from the ventilation system. To change the air temperature in the passenger compartment, turn the knob to the right position for warm and hot air or left position for cooler air.

Temperature conversion

You can switch the temperature mode between Centigrade to Fahrenheit as follows:

1. Select mode.
2. Press the OFF button.
3. Press the air intake control button ( ) 5 times within 3 seconds.

The display will change from Centigrade to Fahrenheit, or from Fahrenheit to Centigrade.

If the battery has been discharged or disconnected, the temperature mode display will reset to Centigrade.

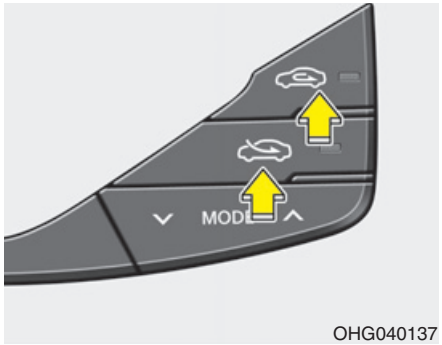

Air intake control

The air intake control is used to select the outside (fresh) air position or recirculated air position.

To change the air intake control position, press the control button.

Recirculated air position

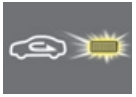

With the recirculated air position selected, air from the passenger compartment will be drawn through the heating system and heated or cooled according to the function selected.

Outside (fresh) air position

With the outside (fresh) air position selected, air enters the vehicle from outside and is heated or cooled according to the function selected.

✻ NOTICE

Driving on high speed with the recirculation air position mode, fresh air may enter the vehicle to ventilate the inside air.

✻ NOTICE

Prolonged operation of the heater in the recirculated air position (without air conditioning selected) may cause fogging of the windshield and side windows and the air within the passenger compartment may become stale.
In addition, prolonged use of the air conditioning with the recirculated air position selected will result in excessively dry air in the passenger compartment.

⚠ WARNING

- **Continue using the climate control system in the recirculated air position may allow humidity to increase inside the vehicle which may fog the glass and obscure visibility.**
- **Do not sleep in a vehicle with the air conditioning or heating system on. It may cause serious harm or death due to a drop in the oxygen level and/or body temperature.**
- **Continue using the climate control system in the recirculated air position can cause drowsiness or sleepiness, and loss of vehicle control. Set the air intake control to the outside (fresh) air position as much as possible while driving.**

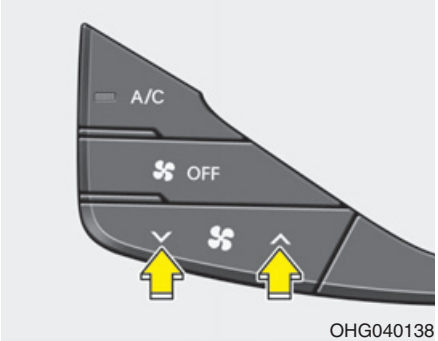

OHG040138

Fan speed control

The ignition switch must be in the ON position for fan operation.

The fan speed control switch allows you to control the fan speed of the air flowing from the ventilation system.

To change the fan speed:

- Press the ∧ part of the switch for higher fan speed.
- Press the ∨ part of the switch for lower fan speed.

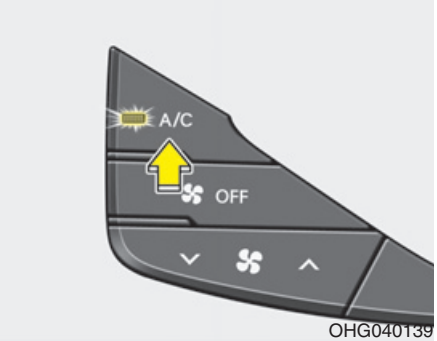

OHG040139

Air conditioning

Press the A/C (air conditioning) button to turn the air conditioning system on (indicator light will illuminate). Press the button again to turn the air conditioning system off.

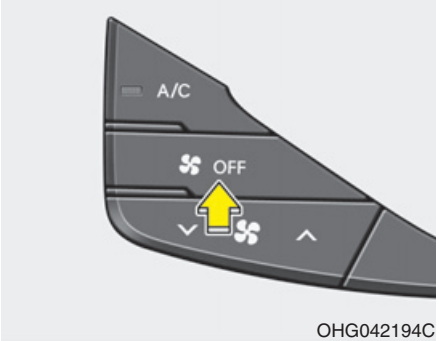

OHG042194C

OFF mode

Press the OFF button to turn off the air climate control system. However, you can still operate the mode and air intake buttons as long as the ignition switch is in the ON position.

System operation

Ventilation

1. Set the mode to the position.
2. Set the air intake control to the outside (fresh) air position.
3. Set the temperature control to the desired position.
4. Set the fan speed control to the desired speed.

Heating

1. Set the mode to the position.
2. Set the air intake control to the outside (fresh) air position.
3. Set the temperature control to the desired position.
4. Set the fan speed control to the desired speed.
5. If dehumidified heating is desired, turn the air conditioning system (if equipped) on.

- If the windshield fogs up, set the mode to the or position.

Operation Tips

- To keep dust or unpleasant fumes from entering the vehicle through the ventilation system, temporarily set the air intake control to the recirculated air position. Be sure to return the control to the fresh air position when the irritation has passed to keep fresh air in the vehicle. This will help keep the driver alert and comfortable.
- Air for the heating/cooling system is drawn in through the grilles just ahead of the windshield. Care should be taken that these are not blocked by leaves, snow, ice or other obstructions.
- To prevent interior fog on the windshield, set the air intake control to the fresh air position and fan speed to the desired position, turn on the air conditioning system, and adjust the temperature control to desired temperature.

Air conditioning

HYUNDAI Air Conditioning Systems are filled with environmentally friendly R-134a refrigerant.

1. Start the engine. Press the air conditioning button.
2. Set the mode to the position.
3. Set the air intake control to the outside air or recirculated air position.
4. Adjust the fan speed control and temperature control to maintain maximum comfort.

- When maximum cooling is desired, set the temperature control to the extreme left position, set the mode control to the MAX A/C position, then set the fan speed control to the highest speed.

✻ NOTICE

- **When using the air conditioning system, monitor the temperature gauge closely while driving up hills or in heavy traffic when outside temperatures are high. Air conditioning system operation may cause engine overheating. Continue to use the blower fan but turn the air conditioning system off if the temperature gauge indicates engine overheating.**
- **When opening the windows in humid weather air conditioning may create water droplets inside the vehicle. Since excessive water droplets may cause damage to electrical equipment, air conditioning should only be used with the windows closed.**

Air conditioning system operation tips

- If the vehicle has been parked in direct sunlight during hot weather, open the windows for a short time to let the hot air inside the vehicle escape.
- To help reduce moisture inside of the windows on rainy or humid days, decrease the humidity inside the vehicle by operating the air conditioning system.
- During air conditioning system operation, you may occasionally notice a slight change in engine speed as the air conditioning compressor cycles. This is a normal system operation characteristic.
- Use the air conditioning system every month only for a few minutes to ensure maximum system performance.
- When using the air conditioning system, you may notice clear water dripping (or even puddling) on the ground under the passenger side of the vehicle. This is a normal system operation characteristic.
- Operating the air conditioning system in the recirculated air position provides maximum cooling, however, continual operation in this mode may cause the air inside the vehicle to become stale.
- During cooling operation, you may occasionally notice a misty air flow because of rapid cooling and humid air intake. This is a normal system operation characteristic.
- If you operate air conditioner excessively, the difference between the temperature of the outside air and that of the windshield could cause the outer surface of the windshield to fog up, causing loss of visibility. In this case, set the mode selection knob or button to the position and fan speed control to the lower speed.

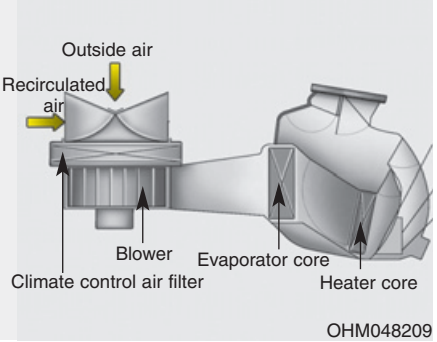

Climate control air filter (if equipped)

The climate control air filter installed behind the glove box filters the dust or other pollutants that come into the vehicle from the outside through the heating and air conditioning system. If dust or other pollutants accumulate in the filter over a period of time, the air flow from the air vents may decrease, resulting in moisture accumulation on the inside of the windshield even when the outside (fresh) air position is selected. If this happens, have the climate control air filter replaced by an authorized HYUNDAI dealer.

✻ NOTICE

- **Replace the filter according to the Maintenance Schedule.**
  If the vehicle is being driven in severe conditions such as dusty or rough roads, more frequent air conditioner filter inspections and changes are required.
- **When the air flow rate suddenly decreases, the system should be checked at an authorized HYUNDAI dealer.**

Checking the amount of air conditioner refrigerant and compressor lubricant

When the amount of refrigerant is low, the performance of the air conditioning is reduced. Overfilling also has a negative impact on the air conditioning system.

Therefore, if abnormal operation is found, have the system inspected by an authorized HYUNDAI dealer.

✻ NOTICE

It is important that the correct type and amount of oil and refrigerant is used. Otherwise, damage to the compressor and abnormal system operation may occur.

⚠ WARNING

The air conditioning system should be serviced by an authorized HYUNDAI dealer. Improper service may cause serious injury to the person performing the service.

AUTOMATIC CLIMATE CONTROL SYSTEM (IF EQUIPPED)

■ Type A

■ Type B

OHG040140/OHG040141

1. Front windshield defroster button
2. Fan speed control knob
3. OFF button
4. Rear window defroster button
5. Dual temperature control selection button
6. Mode selection button
7. Passenger's temperature control switch
8. Air intake control button
9. Climate information screen selection button
10. Driver's temperature control switch
11. AUTO (automatic control) button
12. Air conditioning button

⚠ CAUTION

Operating the blower when the ignition switch is in the ON position could cause the battery to discharge. Operate the blower when the engine is running.

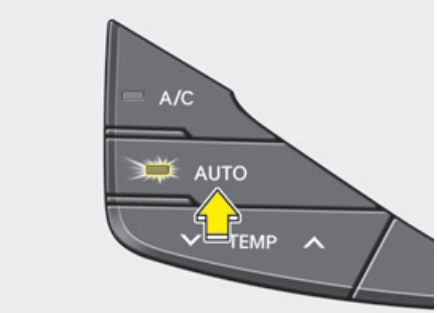

OHG040142

Automatic heating and air conditioning

1. Push the AUTO button.

The modes, fan speeds, air intake and air-conditioning will be controlled automatically by setting the temperature.

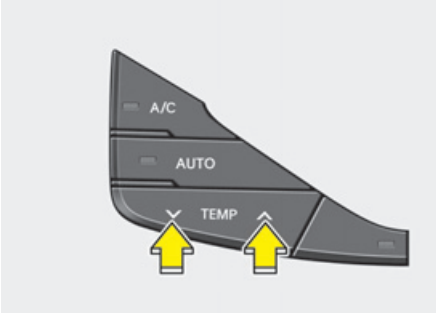

OHG042184

2. Set the temperature to the desired temperature.

✻ NOTICE

- **To turn the automatic operation off, select any button or switch of the following:**
  - Mode selection switch
  - Air conditioning button
  - Front windshield defroster button
  - Air intake control button
  - Fan speed control knob
  The selected function will be controlled manually while other functions operate automatically.
- **For your convenience and to improve the effectiveness of the climate control, use the AUTO button and set the temperature to 23°C (73°F).**

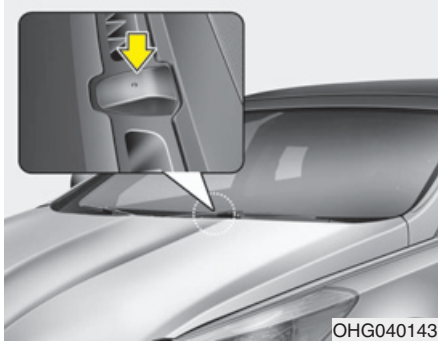
OHG040143

✻ NOTICE

Never place anything over the sensor located on the instrument panel to ensure better control of the heating and cooling system.

Manual heating and air conditioning

The heating and cooling system can be controlled manually by pushing buttons other than the AUTO button. In this case, the system works sequentially according to the order of buttons selected.

When pressing any button except the AUTO button while using automatic operation, the functions not selected will be controlled automatically.

1. Start the engine.
2. Set the mode to the desired position.

To improve the effectiveness of heating and cooling;

- Heating:
- Cooling:

3. Set the temperature control to the desired position.
4. Set the air intake control to the outside (fresh) air position.
5. Set the fan speed control to the desired speed.
6. If air conditioning is desired, turn the air conditioning system on.

Press the AUTO button in order to convert to full automatic control of the system.

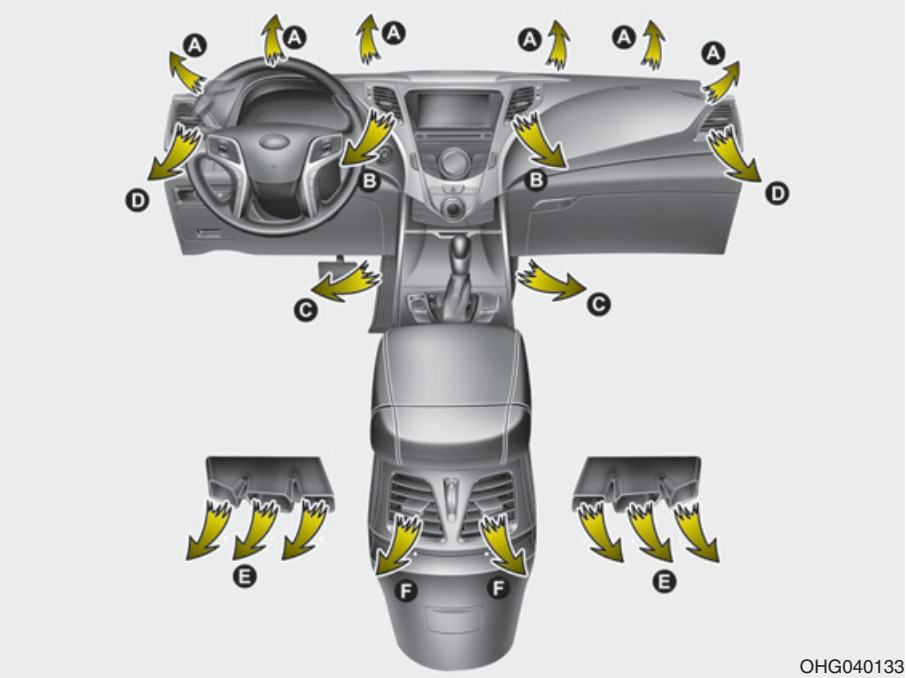

OHG040133

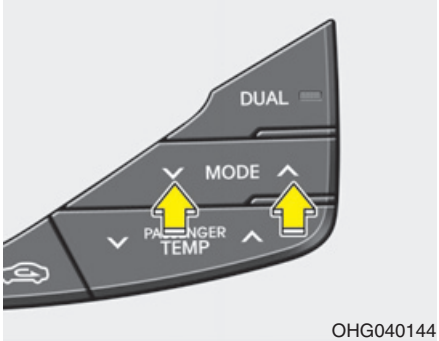

OHG040144

Mode selection

The mode selection switch controls the direction of the air flow through the ventilation system.

The air flow outlet port is converted as follows:

Floor-Level

Most of the air flow is directed to the floor, with a small amount of air directed to the windshield and side window defrosters.

Bi-Level

Air flow is directed towards the face and the floor.

Face-Level

Air flow is directed toward the upper body and face. Additionally, each outlet can be controlled to direct the air discharged from the outlet.

Floor & Defrost

Most of the air flow is directed to the floor and the windshield with a small amount directed to the side window defrosters.

OHG040145

Defrost-Level

Most of the air flow is directed to the windshield with a small amount of air directed to the side window defrosters.

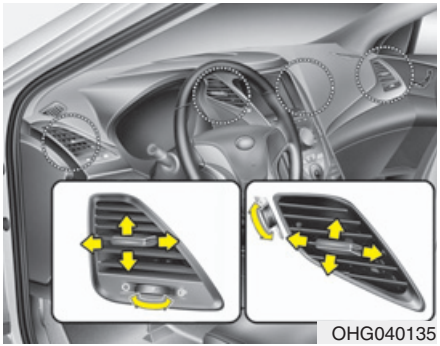
OHG040135

Instrument panel vents

The outlet vents can be opened or closed separately using the thumbwheel.

Also, you can adjust the direction of air delivery from these vents using the vent control lever as shown.

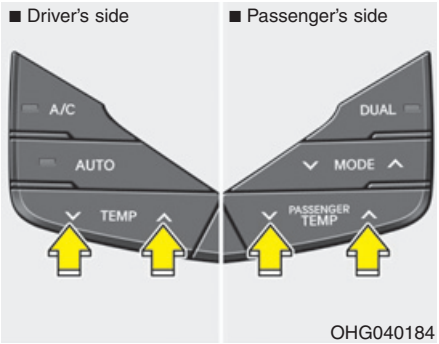

OHG040184

Temperature control

The temperature will increase to the maximum (HIGH) by pressing ∧ part of the switch.

The temperature will decrease to the minimum (LOW) by pressing ∨ part of the switch.

When pressing the switch, the temperature will increase or decrease by 0.5 °C. When set to the lowest temperature setting, the air conditioning will operate continuously.

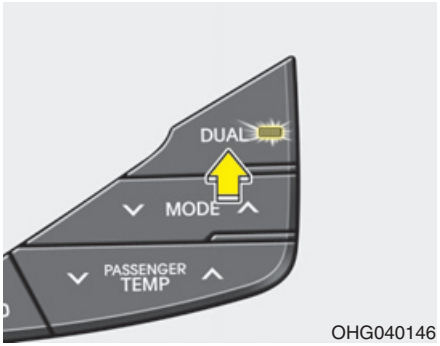

OHG040146

Adjusting the driver and passenger side temperature individually

1. Press the DUAL button to operate the driver and passenger side temperature individually. Pressing the right temperature control button will automatically switch to the DUAL mode as well.
2. Operate the left temperature control to adjust the driver side temperature. Operate the right temperature control to adjust the passenger side temperature.

When the driver side temperature is set to the highest (HIGH) or lowest (LOW) temperature setting, the DUAL mode is deactivated for maximum heating or cooling.

Adjusting the driver and passenger side temperature equally

1. Press the DUAL button again to deactivate DUAL mode. The passenger side temperature will be set to the same temperature as the driver side temperature.
2. Operate the driver's side temperature control switch. The driver and passenger side temperature will be adjusted equally.

Temperature conversion

You can switch the temperature mode between Centigrade to Fahrenheit as follows:

While pressing the MODE button, press the DUAL button for 3 seconds or more.

The display will change from Centigrade to Fahrenheit, or from Fahrenheit to Centigrade.

If the battery has been discharged or disconnected, the temperature mode display will reset to Centigrade.

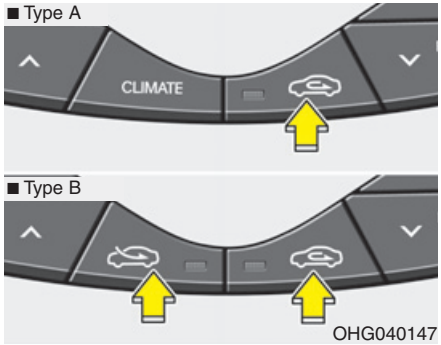

Air intake control

This is used to select the outside (fresh) air position or recirculated air position.

To change the air intake control position, push the control button.

Recirculated air position

With the recirculated air position selected, air from the passenger compartment will be drawn through the heating system and heated or cooled according to the function selected.

Outside (fresh) air position

■ Type A

■ Type B

With the outside (fresh) air position selected, air enters the vehicle from outside and is heated or cooled according to the function selected.

✻ NOTICE

Driving on high speed with the recirculation air position mode, fresh air may enter the vehicle to ventilate the inside air.

✻ NOTICE

Prolonged operation of the heater in the recirculated air position (without air conditioning selected) may cause fogging of the windshield and side windows and the air within the passenger compartment may become stale.
In addition, prolonged use of the air conditioning with the recirculated air position selected will result in excessively dry air in the passenger compartment.

⚠ WARNING

- **Continued climate control system operation in the recirculated air position may allow humidity to increase inside the vehicle which may fog the glass and obscure visibility.**
- **Do not sleep in a vehicle with the air conditioning or heating system on. It may cause serious harm or death due to a drop in the oxygen level and/or body temperature.**
- **Continued climate control system operation in the recirculated air position can cause drowsiness or sleepiness, and loss of vehicle control. Set the air intake control to the outside (fresh) air position as much as possible while driving.**

OHG040148

Fan speed control

The fan speed can be set to the desired speed by turning the fan speed control knob.

The higher the fan speed is, the more air is delivered.

Pressing the OFF button turns off the fan.

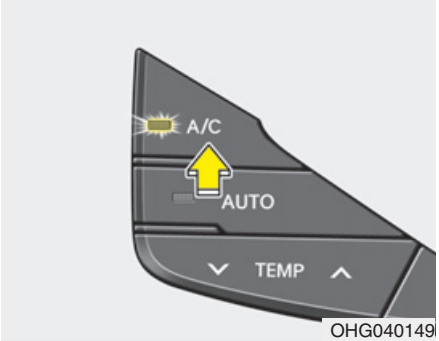

OHG040149

Air conditioning

Press the A/C button to turn the air conditioning system on (indicator light will illuminate).

Press the button again to turn the air conditioning system off.

OHG040150

OFF mode

Press the OFF button to turn off the air climate control system. However, you can still operate the mode and air intake buttons as long as the ignition switch is in the ON position.

OHG040151

Climate information screen selection (if equipped)

Press the climate information screen selection button to display climate information on the screen.

System operation

Ventilation

1. Set the mode to the position.
2. Set the air intake control to the outside (fresh) air position.
3. Set the temperature control to the desired position.
4. Set the fan speed control to the desired speed.

Heating

1. Set the mode to the position.
2. Set the air intake control to the outside (fresh) air position.
3. Set the temperature control to the desired position.
4. Set the fan speed control to the desired speed.
5. If dehumidified heating is desired, turn the air conditioning system (if equipped) on.

- If the windshield fogs up, set the mode to the or position.

Operation Tips

- To keep dust or unpleasant fumes from entering the vehicle through the ventilation system, temporarily set the air intake control to the recirculated air position. Be sure to return the control to the fresh air position when the irritation has passed to keep fresh air in the vehicle. This will help keep the driver alert and comfortable.
- Air for the heating/cooling system is drawn in through the grilles just ahead of the windshield. Care should be taken that these are not blocked by leaves, snow, ice or other obstructions.
- To prevent interior fog on the windshield, set the air intake control to the fresh air position and fan speed to the desired position, turn on the air conditioning system, and adjust the temperature control to desired temperature.

Air conditioning

HYUNDAI Air Conditioning Systems are filled with environmentally friendly R-134a refrigerant.

1. Start the engine. Press the air conditioning button.
2. Set the mode to the position.
3. Set the air intake control to the outside air or recirculated air position.
4. Adjust the fan speed control and temperature control to maintain maximum comfort.

✻ NOTICE

- **When using the air conditioning system, monitor the temperature gauge closely while driving up hills or in heavy traffic when outside temperatures are high. Air conditioning system operation may cause engine overheating. Continue to use the blower fan but turn the air conditioning system off if the temperature gauge indicates engine overheating.**
- **When opening the windows in humid weather air conditioning may create water droplets inside the vehicle. Since excessive water droplets may cause damage to electrical equipment, air conditioning should only be used with the windows closed.**

Air conditioning system operation tips

- If the vehicle has been parked in direct sunlight during hot weather, open the windows for a short time to let the hot air inside the vehicle escape.
- To help reduce moisture inside of the windows on rainy or humid days, decrease the humidity inside the vehicle by operating the air conditioning system.
- During air conditioning system operation, you may occasionally notice a slight change in engine speed as the air conditioning compressor cycles. This is a normal system operation characteristic.
- Use the air conditioning system every month only for a few minutes to ensure maximum system performance.
- When using the air conditioning system, you may notice clear water dripping (or even puddling) on the ground under the passenger side of the vehicle. This is a normal system operation characteristic.
- Operating the air conditioning system in the recirculated air position provides maximum cooling, however, continual operation in this mode may cause the air inside the vehicle to become stale.

- During cooling operation, you may occasionally notice a misty air flow because of rapid cooling and humid air intake. This is a normal system operation characteristic.
- If you operate air conditioner excessively, the difference between the temperature of the outside air and that of the windshield could cause the outer surface of the windshield to fog up, causing loss of visibility. In this case, set the mode selection knob or button to the position and fan speed control to the lower speed.

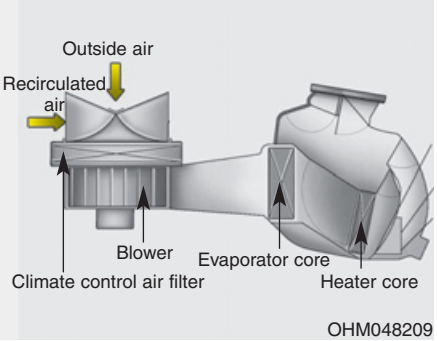

Climate control air filter (if equipped)

The climate control air filter installed behind the glove box filters the dust or other pollutants that come into the vehicle from the outside through the heating and air conditioning system. If dust or other pollutants accumulate in the filter over a period of time, the air flow from the air vents may decrease, resulting in moisture accumulation on the inside of the windshield even when the outside (fresh) air position is selected. If this happens, have the climate control air filter replaced by an authorized HYUNDAI dealer.

✻ NOTICE

- **Replace the filter according to the Maintenance Schedule.**
  If the vehicle is being driven in severe conditions such as dusty or rough roads, more frequent air conditioner filter inspections and changes are required.
- **When the air flow rate suddenly decreases, the system should be checked at an authorized HYUNDAI dealer.**

Checking the amount of air conditioner refrigerant and compressor lubricant

When the amount of refrigerant is low, the performance of the air conditioning is reduced. Overfilling also has a negative impact on the air conditioning system.

Therefore, if abnormal operation is found, have the system inspected by an authorized HYUNDAI dealer.

✻ NOTICE

It is important that the correct type and amount of oil and refrigerant is used. Otherwise, damage to the compressor and abnormal system operation may occur.

⚠ WARNING

The air conditioning system should be serviced by an authorized HYUNDAI dealer. Improper service may cause serious injury to the person performing the service.

WINDSHIELD DEFROSTING AND DEFOGGING

⚠ WARNING - Windshield heating

Do not use the or position during cooling operation in extremely humid weather. The difference between the temperature of the outside air and that of the windshield could cause the outer surface of the windshield to fog up, causing loss of visibility. In this case, set the mode selection knob or button to the position and fan speed control knob or button to the lower speed.

- For maximum defrosting, set the temperature control to the extreme right/hot position and the fan speed control to the highest speed.
- If warm air to the floor is desired while defrosting or defogging, set the mode to the floor-defrost position.
- Before driving, clear all snow and ice from the windshield, rear window, outside rear view mirrors, and all side windows.
- Clear all snow and ice from the hood and air inlet in the cowl grill to improve heater and defroster efficiency and to reduce the probability of fogging up the inside of the windshield.

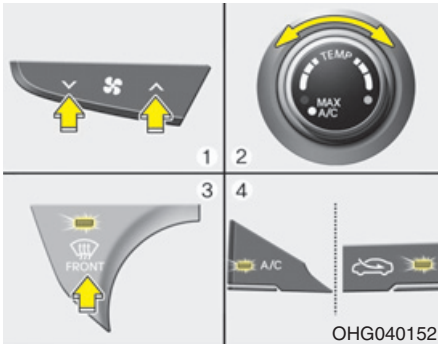

Manual climate control system

To defog inside windshield

1. Set the fan speed to the desired position.
2. Select desired temperature.
3. Select the or position.
4. The outside (fresh) air will be selected automatically. If the position is selected, air conditioning will also be selected automatically.

If the air conditioning and/or outside (fresh) air position are not selected automatically, press the corresponding button manually.

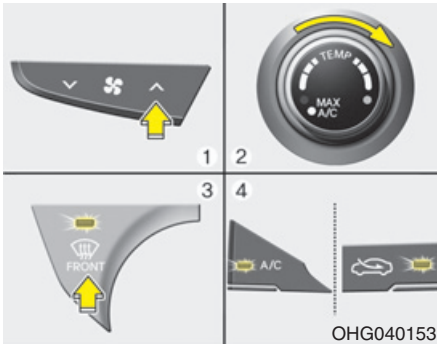

OHG040153

To defrost outside windshield

1. Set the fan speed to the highest position.
2. Set the temperature to the extreme hot position.
3. Select the position.
4. The outside (fresh) air and air conditioning will be selected automatically.

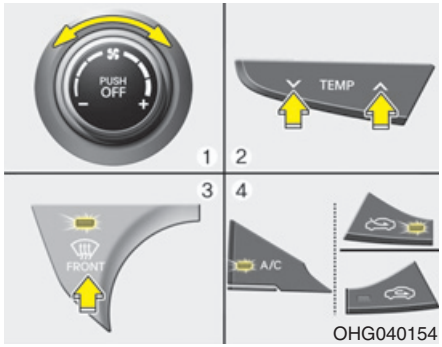

OHG040154

Automatic climate control system

To defog inside windshield

1. Set the fan speed to the desired position.
2. Select desired temperature.
3. Press the defroster button ( ).
4. The air conditioning will be turned on according to the detected ambient temperature and outside (fresh) air position will be selected automatically.

If the air conditioning and outside (fresh) air position are not selected automatically, adjust the corresponding button manually. If the position is selected, lower fan speed is adjusted to a higher fan speed.

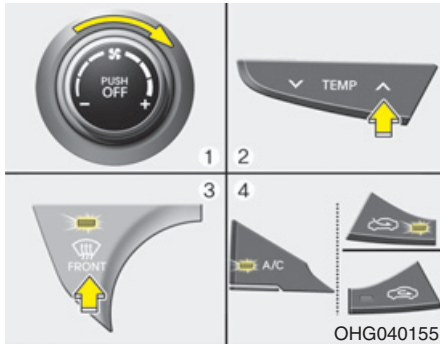

OHG040155

To defrost outside windshield

1. Set the fan speed to the highest (extreme right) position.
2. Set the temperature to the extreme hot (HIGH) position.
3. Press the defroster button ( ).
4. The air conditioning will be turned on according to the detected ambient temperature and outside (fresh) air position will be selected automatically.

If the position is selected, lower fan speed is adjusted to a higher fan speed.

Defogging logic

To reduce the probability of fogging up the inside of the windshield, the air intake or air conditioning are controlled automatically according to certain conditions such as or position. To cancel or return the defogging logic, do the following.

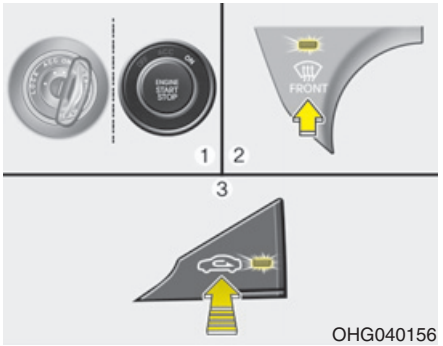

OHG040156

Manual climate control system

1. Turn the ignition switch to the ON position.
2. Press the defrost button ( ).
3. Press the air intake control button at least 5 times within 3 seconds.

The indicator on the air intake button blinks 3 times with 0.5 second of interval. It indicates that the defogging logic is canceled or returned to the programmed status.

If the battery has been discharged or disconnected, it resets to the defog logic status.

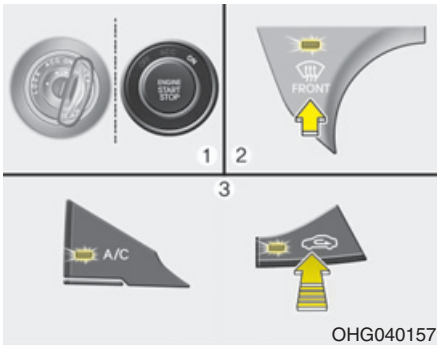

OHG040157

Automatic climate control system

1. Turn the ignition switch to the ON position.
2. Press the defrost button ( ).
3. While holding the air conditioning button (A/C) pressed, press the air intake control button at least 5 times within 3 seconds.

The indicator on the air intake button blinks 3 times with 0.5 second of interval. It indicates that the defogging logic is canceled or returned to the programmed status.

If the battery has been discharged or disconnected, it resets to the defog logic status.

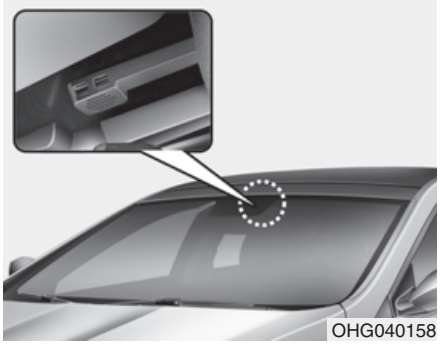

Auto defogging system (Only for automatic climate control system, if equipped)

Auto defogging reduces the possibility of fogging up the inside of the windshield by automatically sensing the moisture of inside the windshield.

The auto defogging system operates when the heater or air conditioning is on.

This indicator illuminates when the auto defogging system senses the moisture of inside the windshield and operates.

If more moisture is in the vehicle, higher steps operate as follow. For example if auto defogging does not defog inside the windshield at step 1 Outside air position, it tries to defog again at step 2 Blowing air toward the windshield.

Step 1 : Outside air position
Step 2 : Blowing air toward the windshield
Step 3 : Increasing air flow toward the windshield
Step 4 : Operating the air conditioning
Step 5 : Maximizing the air conditioning

If your vehicle is equipped with the auto defogging system, it is automatically activated when the conditions are met. However, if you would like to cancel the auto defogging system, press the front defroster button 4 times within 2 seconds while pressing the AUTO button. The indicator of front defroster button will blink 3 times to notify you that the system is cancelled. To use the auto defogging system again, follow the procedures mentioned above.

If the battery has been disconnected or discharged, it resets to the auto defogging status.

✻ NOTICE

If the A/C off or recirculated air position is manually selected while the auto defogging system is on, the auto defogging indicator will blink 3 times to give notice that the A/C off or recirculated air position operation cannot be selected.

⚠ CAUTION

Do not remove the sensor cover located on the upper end of the driver side windshield glass. Damage to the system parts could occur and may not be covered by your vehicle warranty.

STORAGE COMPARTMENTS

These compartments can be used to store small items required by the driver or passengers.

⚠ CAUTION

- ***To avoid possible theft, do not leave valuables in the storage compartments.***
- ***Always keep the storage compartment covers closed while driving. Do not attempt to place so many items in the storage compartment that the storage compartment cover cannot close securely.***

⚠ WARNING - Flammable materials

Do not store cigarette lighters, propane cylinders, or other flammable/explosive materials in the vehicle. These items may catch fire and/or explode if the vehicle is exposed to hot temperatures for extended periods.

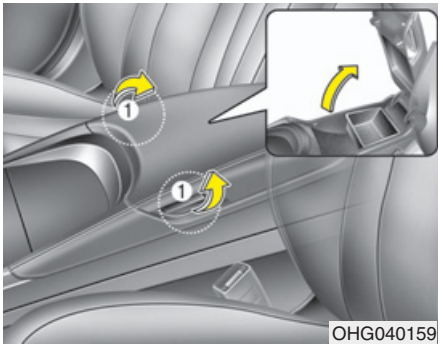

Center console storage

To open the center console storage, pull up the lever (1).

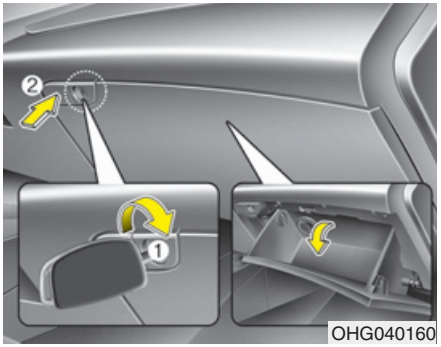

Glove box

The glove box can be locked and unlocked with a master key (or mechanical key of smart key) (1).

To open the glove box, push the button (2) and the glove box will automatically open. Close the glove box after use.

⚠ WARNING

To reduce the risk of injury in an accident or sudden stop, always keep the glove box door closed while driving.

⚠ CAUTION

Do not keep food in the glove box for a long time.

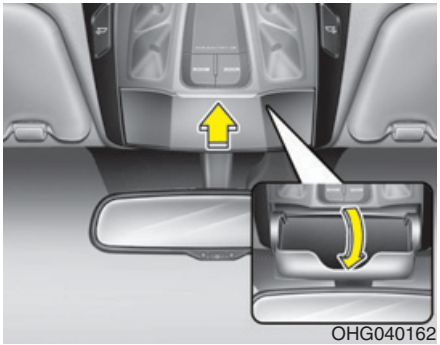

Sunglass holder

To open the sunglass holder, press the cover and the holder will slowly open. Place your sunglasses in the compartment door with the lenses facing out. Push to close.

⚠ WARNING

- **Do not keep objects except sunglasses inside the sunglass holder. Such objects can be thrown from the holder in the event of a sudden stop or an accident, possibly injuring the passengers in the vehicle.**
- **Do not open the sunglass holder while the vehicle is moving. The rear view mirror of the vehicle can be blocked by an open sunglass holder.**
- **Do not put the glasses forcibly into a sunglass holder to prevent breakage or deformation of glasses. It may cause personal injury if you try to open it forcibly when the glasses are jammed in holder.**

INTERIOR FEATURES

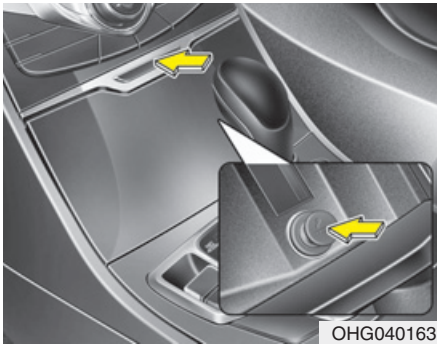

Cigarette lighter (if equipped)

For the cigarette lighter to work, the ignition switch must be in the ACC position or the ON position.

To use the cigarette lighter:

1. Open the cover by pressing the switch.
2. Push the lighter all the way into the socket.

When the element has heated, the lighter will pop out to the "ready" position.

If it is necessary to replace the cigarette lighter, use only a genuine HYUNDAI replacement or its approved equivalent.

⚠ WARNING

- **Holding the lighter in after it is heated will cause it to overheat.**
- **If the lighter does not pop out within 30 seconds, remove it to prevent overheating.**
- **Do not insert foreign objects into the socket of the cigarette lighter. It may damage the cigarette lighter.**

⚠ CAUTION

Only a genuine HYUNDAI lighter should be used in the cigarette lighter socket. The use of plug-in accessories (shavers, hand-held vacuums, and coffee pots, for example) may damage the socket or cause electrical failure.

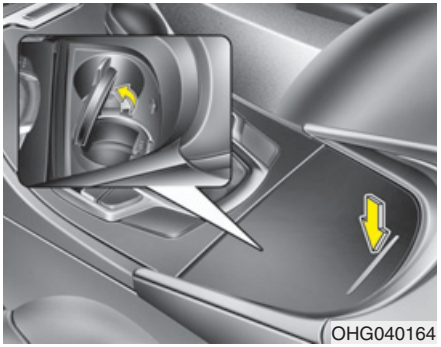

Ashtray (if equipped)

To use the ashtray, open the cover.

To clean or empty the ashtray, pull it out.

⚠ WARNING - Ashtray use

- **Do not use the vehicle's ashtrays as waste receptacles.**
- **Putting lit cigarettes or matches in an ashtray with other combustible materials may cause a fire.**

Cup holder

⚠ WARNING - Hot liquids

- **Do not place uncovered cups of hot liquid in the cup holder while the vehicle is in motion. If the hot liquid spills, you could be burned. Such a burn to the driver could lead to loss of control of the vehicle.**
- **To reduce the risk of personal injury in the event of sudden stop or collision, do not place uncovered or unsecured bottles, glasses, cans, etc., in the cup holder while the vehicle is in motion.**

⚠ WARNING

Keep cans or bottles out of direct sun light and do not put them in a vehicle that is heated up. It may explode.

⚠ CAUTION

- ***Do not place uncovered cups or unsecured bottles, cans, etc. with liquid in the cup holder while the vehicle is in motion. In a sudden stop, the liquid may spill on the vehicle's electrical devices and cause electrical problems.***
- ***Do not place cups, cans, etc. that does not fit the cup holder. It may damage the cup holder.***
- ***Always close the cover when the cup holder is not in use.***

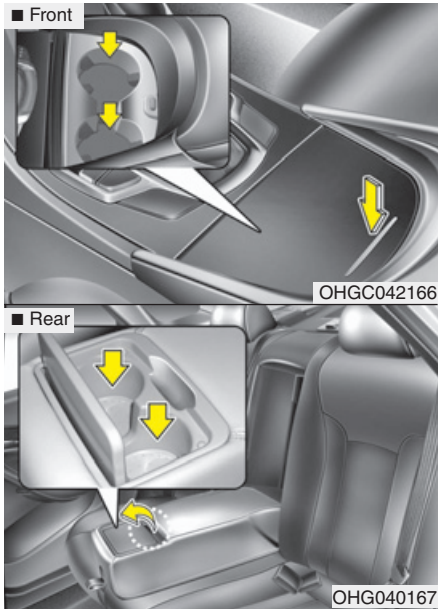

Cups or small beverage cans may be placed in the cup holders.

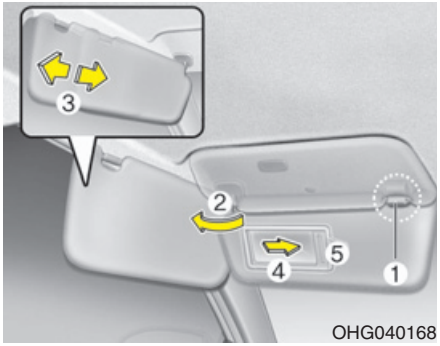

OHG040168

Sunvisor

Use the sunvisor to shield direct light through the front or side windows.

To use a sunvisor, pull it downward.

To use a sunvisor for a side window, pull it downward, unsnap it from the bracket (1) and swing it to the side (2).

Adjust the sunvisor extension forward or backward (3).

To use the vanity mirror, pull down the visor and slide the mirror cover (4).

The ticket holder (5) is provided for holding a tollgate ticket.

⚠ WARNING

For your safety, do not block your view when using the sunvisor.

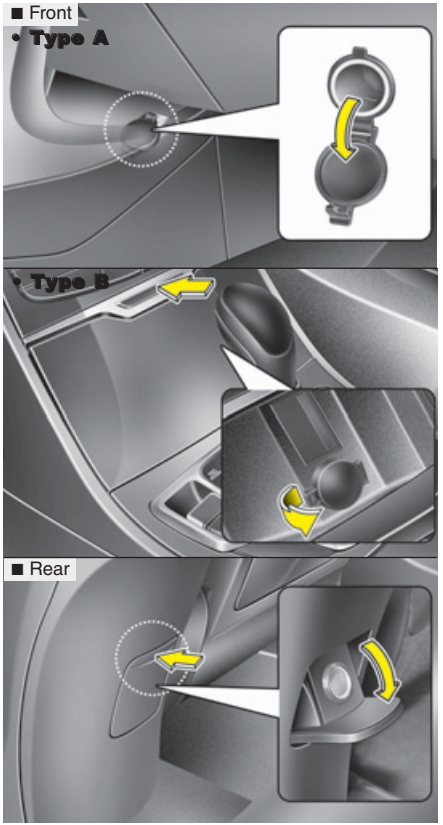

OHG040169/OHG040190L/OHG040170

Power outlet

The power outlet is designed to provide power for mobile telephones or other devices designed to operate with vehicle electrical systems. The devices should draw less than 10 amps with the engine running.

⚠ CAUTION

- ***Use the power outlet only when the engine is running and remove the accessory plug after use. Using the accessory plug for prolonged periods of time with the engine off could cause the battery to discharge.***
- ***Only use 12V electric accessories which are less than 10A in electric capacity.***
- ***Adjust the air-conditioner or heater to the lowest operating level when using the power outlet.***
- ***Close the cover when not in use.***
- ***Some electronic devices can cause electronic interference when plugged into a vehicle's power outlet. These devices may cause excessive audio static and malfunctions in other electronic systems or devices used in your vehicle.***

⚠ WARNING
Do not put a finger or a foreign element (pin, etc.) into a power outlet and do not touch with a wet hand. You may get electrocuted or fire may occur.

Digital clock

Whenever the battery terminals or related fuses are disconnected, you must reset the time.

Detailed information on setting the clock is described in Audio system section 4.

⚠ WARNING
Do not adjust the clock while driving. You may lose your steering control and cause an accident that results in severe personal injury or death.

Clothes hanger (if equipped)

To use the hanger, pull down the upper portion of hanger.

⚠ CAUTION
Do not hang heavy clothes, since those may damage the hook.

⚠ WARNING
Do not hang other objects except clothes. In an accident it may cause vehicle damage or personal injury.

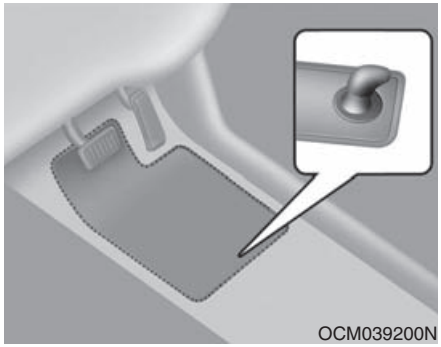

Floor mat anchor(s) (if equipped)

When using a floor mat on the front floor carpet, make sure it attaches to the floor mat anchor(s) in your vehicle. This keeps the floor mat from sliding forward.

⚠ WARNING

The following must be observed when installing ANY floor mat to the vehicle.

- **Ensure that the floor mats are securely attached to the vehicle's floor mat anchor(s) before driving the vehicle.**
- **Do not use ANY floor mat that cannot be firmly attached to the vehicle's floor mat anchors.**
- **Do not stack floor mats on top of one another (e.g. all-weather rubber mat on top of a carpeted floor mat). Only a single floor mat should be installed in each position.**

IMPORTANT - Your vehicle was manufactured with driver's side floor mat anchors that are designed to securely hold the floor mat in place. To avoid any interference with pedal operation, HYUNDAI recommends that only the HYUNDAI floor mat designed for use in your vehicle be installed.

Luggage net (holder) (if equipped)

To keep items from shifting in the cargo area, you can use the holders located in the cargo area to attach the luggage net.

⚠ CAUTION

To prevent damage to goods or the vehicle, care should be taken when carrying fragile or bulky objects in the luggage compartment.

⚠ WARNING

To avoid eye injury, DO NOT overstretch the luggage net. ALWAYS keep your face and body out of the luggage net's recoil path. DO NOT use the luggage net when the strap has visible signs of wear or damage.

■ Type A

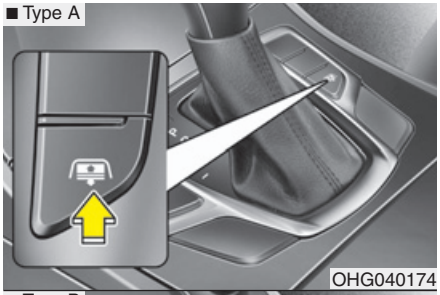

OHG040174

■ Type B

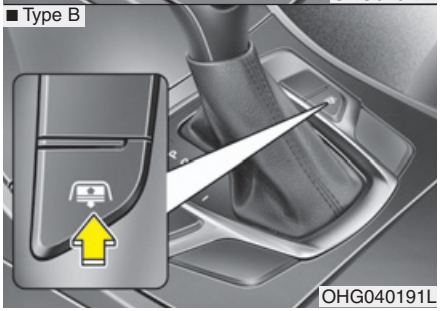

OHG040191L

Rear curtain (if equipped)

To fold the rear curtain, press the button. To unfold the rear curtain, press the button again.

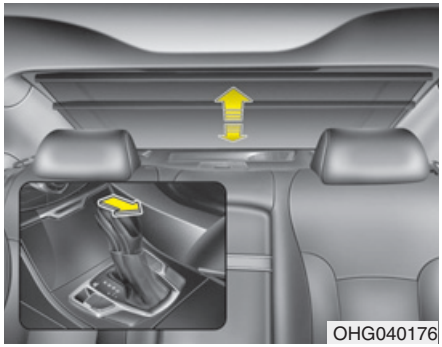

OHG040176

The rear curtain will fold automatically when you shift the shift lever into R (Reverse) and unfold automatically when you shift the shift lever from R (Reverse) into P (Park).

After the rear curtain is folded by shifting the shift lever into R (Reverse) and drive more than 20 km/h with the shift lever in D (Drive), the rear curtain will unfold automatically.

⚠ CAUTION

Do not pull or fold the rear curtain by hand. It could cause motor failure.

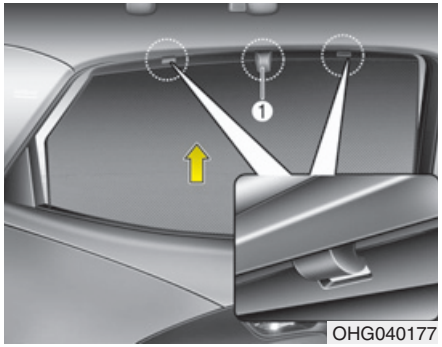

OHG040177

Side curtain (if equipped)

To use the side curtain:

1. Lift the curtain by the hook (1).
2. Hang the curtain on both sides of the hook.

AUDIO SYSTEM

✻ NOTICE

- **If you install an aftermarket HID head lamp, your vehicle's audio and electronic device may malfunction.**
- **Prevent chemicals such as perfume, cosmetic oil, sun cream, hand cleaner, and air freshener from contacting the interior parts because they may cause damage or discoloration.**

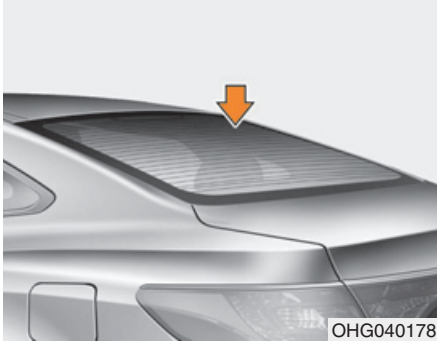

Glass antenna (if equipped)

When the radio power switch is turned on while the ignition switch is in either the "ON" or "ACC" position, your car will receive both AM and FM broadcast signals through the antenna in the rear window glass.

⚠ CAUTION

- ***Do not clean the inside of the rear window glass with a cleaner or use a scraper to remove foreign deposits as this may cause damage to the antenna elements.***
- ***Avoid adding metallic coatings such as Ni, Cd, and so on. These can disturb receiving AM and FM broadcast signals.***

⚠ CAUTION

- ***To prevent damage to the rear glass antenna, never use sharp instruments or window cleaner containing abrasives to clean the window. Clean the inside surface of the rear glass window with a piece of soft cloth.***
- ***When putting a sticker on the inside surface of the rear window, be careful not to damage to the rear glass antenna.***
- ***Do not put sharp instruments nearby the rear glass antenna.***
- ***Tinted rear window may affect the proper functioning of the antenna.***

OHG040179L

Steering wheel audio control (if equipped)

The steering wheel audio control button is installed to promote safe driving.

⚠ CAUTION

Do not operate audio remote control buttons simultaneously.

VOLUME (VOL +/-) (1)

- Push up the lever to increase volume.
- Push down the lever to decrease volume.

SEEK/PRESET (∧ / ∨) (2)

If the SEEK/PRESET button is pressed for 0.8 seconds or more, it will work as follows in each mode.

RADIO mode

It will function as the AUTO SEEK select button. It will SEEK until you release the button.

CDP mode

It will function as the FF/REW button.

CDC mode

It will function as the DISC UP/DOWN button.

If the SEEK/PRESET button is pressed for less than 0.8 seconds, it will work as follows in each mode.

RADIO mode

It will function as the PRESET STATION select buttons.

CDP mode

It will function as the TRACK UP/DOWN button.

CDC mode

It will function as the TRACK UP/DOWN button.

Detailed information for audio control buttons is included in the following pages in this section.

MODE (3)

Press the MODE button to select Fadio, CD (Compact Disc) or CDC* (Compact Disc Changer).

MUTE (4) (if equipped)

- Press the MUTE button to cancel the sound.
- Press the MUTE button again to activate the sound.

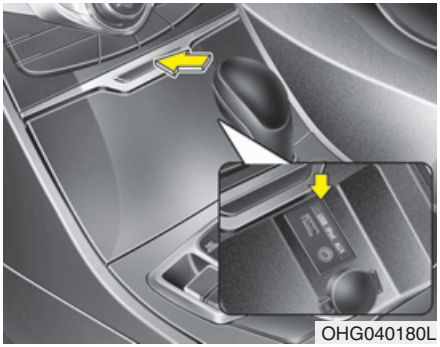
OHG040180L

Aux, USB and iPod® port (if equipped)

If your vehicle has an aux and/or USB (universal serial bus) port or iPod® port, you can use an aux port to connect audio devices a USB port to plug in a USB, and an iPod® port to plug in an iPod®.

✻ NOTICE

When using a portable audio device connected to the power outlet, noise may occur during playback. If this happens, use the power source of the portable audio device.

✻ iPod® is a trademark of Apple Inc.

FM radio reception

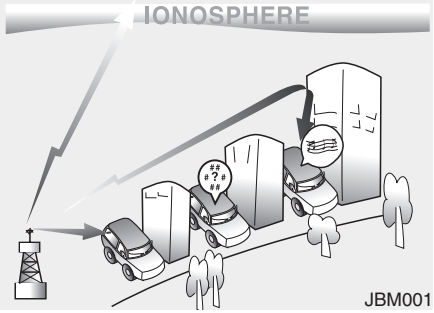

JBM001

How vehicle audio works

AM and FM radio signals are broadcast from transmitter towers located around your city. They are intercepted by the radio antenna on your vehicle. This signal is then received by the radio and sent to your vehicle speakers.

When a strong radio signal has reached your vehicle, the precise engineering of your audio system ensures the best possible quality reproduction. However, in some cases the signal coming to your vehicle may not be strong and clear. This can be due to factors such as the distance from the radio station, closeness of other strong radio stations or the presence of buildings, bridges or other large obstructions in the area.

AM radio reception

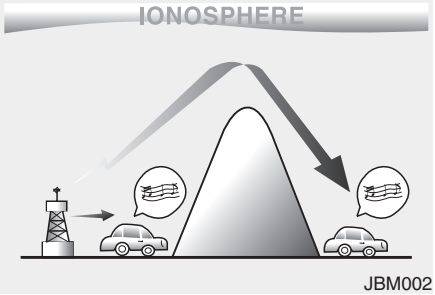

JBM002

AM broadcasts can be received at greater distances than FM broadcasts. This is because AM radio waves are transmitted at low frequencies. These long, low frequency radio waves can follow the curvature of the earth rather than travelling straight out into the atmosphere. In addition, they curve around obstructions so that they can provide better signal coverage.

FM radio station

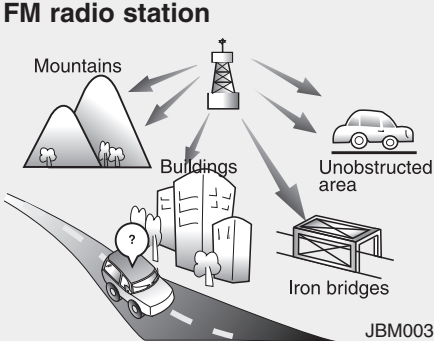

FM broadcasts are transmitted at high frequencies and do not bend to follow the earth's surface. Because of this, FM broadcasts generally begin to fade at short distances from the station.

Also, FM signals are easily affected by buildings, mountains, or other obstructions. These can result in certain listening conditions which might lead you to believe a problem exists with your radio. The following conditions are normal and do not indicate radio trouble:

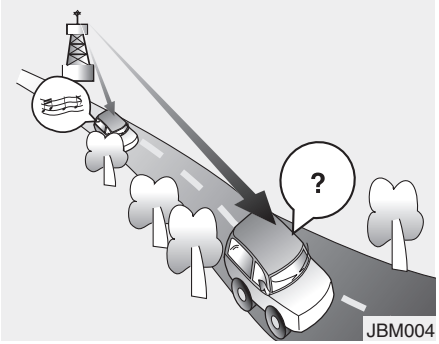

- Fading - As your vehicle moves away from the radio station, the signal will weaken and sound will begin to fade. When this occurs, we suggest that you select another stronger station.
- Flutter/Static - Weak FM signals or large obstructions between the transmitter and your radio can disturb the signal causing static or fluttering noises to occur. Reducing the treble level may lessen this effect until the disturbance clears.

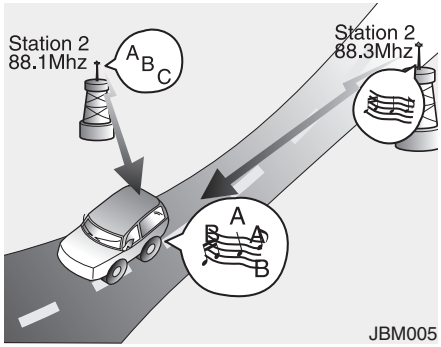

- Station Swapping - As a FM signal weakens, another more powerful signal near the same frequency may begin to play. This is because your radio is designed to lock onto the clearest signal. If this occurs, select another station with a stronger signal.
- Multi-Path Cancellation - Radio signals being received from several directions can cause distortion or fluttering. This can be caused by a direct and reflected signal from the same station, or by signals from two stations with close frequencies. If this occurs, select another station until the condition has passed.

Using a cellular phone or a two-way radio

When a cellular phone is used inside the vehicle, noise may be produced from the audio equipment. This does not mean that something is wrong with the audio equipment. In such a case, use the cellular phone at a place as far as possible from the audio equipment.

⚠ CAUTION

When using a communication system such a cellular phone or a radio set inside the vehicle, a separate external antenna must be fitted. When a cellular phone or a radio set is used with an internal antenna alone, it may interfere with the vehicle's electrical system and adversely affect safe operation of the vehicle.

⚠ WARNING

Do not use a cellular phone while driving. Stop at a safe location to use a cellular phone.

Care of discs

- If the temperature inside the vehicle is too high, open the vehicle windows for ventilation before using your vehicle audio.
- It is illegal to copy and use MP3/WMA files without permission. Use CDs that are created only by lawful means.
- Do not apply volatile agents such as benzene and thinner, normal cleaners and magnetic sprays made for analogue disc onto CDs.
- To prevent the disc surface from getting damaged. Hold and carry CDs by the edges or the edges of the center hole only.
- Clean the disc surface with a piece of soft cloth before playback (wipe it from the center to the outside edge).
- Do not damage the disc surface or attach pieces of sticky tape or paper onto it.
- Make sure objects other than CDs are not inserted into the CD player (Do not insert more than one CD at a time).
- Keep CDs in their cases after use to protect them from scratches or dirt.
- Depending on the type of CD-R/CD-RW CDs, certain CDs may not operate normally according to manufacturing companies or making and recording methods. In such circumstances, if you still continue to use those CDs, they may cause the malfunction of your vehicle audio system.

✻ NOTICE - Playing an Incompatible Copy Protected Audio CD

Some copy protected CDs, which do not comply with the international audio CD standards (Red Book), may not play on your vehicle audio. Please note that if you try to play copy protected CDs and the CD player does not perform correctly the CDs maybe defective, not the CD player.

■ **CD Player : AC110HG/AC100HG**
AC210HG/AC200HG

■ **CD Changer : AC610HG/AC600HG**

✻ There will be no Bluetooth logo if the *Bluetooth*® Wireless Technology feature is not supported.

AC110HG_CDP_BT / AC610HG_CDC_BT

AC110HG_CDP_BT

Using RADIO, SETUP, VOLUME and AUDIO CONTROL

1. FM Button

Turns to FM mode and toggles FM1 and FM2 when the button is pressed each time.

2. AM Button

Pressing the AM button selects the AM band. AM Mode is displayed on the LCD.

3. SEEK Button

- When the SEEK TRACK button is pressed, it increases the band frequency to automatically select channel. Stops at the previous frequency if no channel is found.
- When the SEEK TRACK button is pressed, it reduces the band frequency to automatically select channel. Stops at the previous frequency if no channel is found.

4. AST Button (AUTO STORE Button)

When the button is pressed, it automatically selects and saves channels with high reception rate to PRESET buttons 1 ~ 6 and plays the channel saved in PRESET1. If no channel is saved after AST, it will play the previous channel.

- When the button is pressed for longer than 0.8 second, it automatically scans the radio preset station upwards.
- Press the SCAN button again to stop the scan feature and to listen to the currently selected channel.

5. VOLUME Knob

If the knob is turned clockwise/counter-clockwise, the volume will increase /decrease.

6. SETUP Button

■ AC110/100/610/600HG

Press this button to turn to the SETUP adjustment mode.

If no action is taken for 8 seconds after pressing the button, it will return to the play mode. (After entering SETUP mode, select Manual < FILE, > TUNE button and push OK button)

The setup changes in the order of Scroll ➟ SDVC ➟ Media ➟ Sound ➟ Phone ➟ Clock ➟ Scroll...

■ AC210/200HG

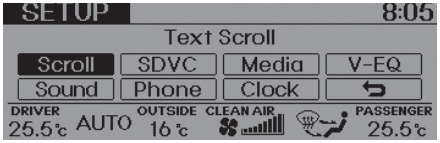

The setup Change in the order of
Scroll ➡ SDVC ➡ Media ➡ V-EQ ➡ Sound ➡ Phone ➡ Clock ➡ ⮌ ➡ Scroll ...

• SCROLL

This function is used to display characters longer than the LCD text display and can be turned On/Off through the FILE, TUNE button.

• SDVC (Speed Dependent Volume Control)

This function automatically adjusts the volume level according to the speed of the vehicle and can be turned On/Off through the FILE, TUNE button.

• MEDIA

Select default display of MP3 play information. “Folder/File” or “Artist/Title” can be selected.

• V-EQ

Press the FILE, TUNE button to select the Variable EQ the following order : Innocente (Normal), Forza (Dynamic), Concerto (Concert) select and press the OK button to complete and exit from Variable EQ setup mode.

• SOUND

The Bass, Middle, Treble, Fader, Balance mode. Press the FOLDER, FOLDER button to select mode. After selecting each mode, press FILE, TUNE button.

BASS Control

To increase the BASS, press the right button, while to decrease the BASS, press the left button.

AC110HG_CDP_BT

MIDDLE Control

To increase the MIDDLE, press the right button, while to decrease the MIDDLE, press the left button.

TREBLE Control

To increase the TREBLE, press the right button, while to decrease the TREBLE, press the left button.

FADER Control

Press the right button to emphasize rear speaker sound(front speaker sound will be attenuated). When the left button is pressed, front speaker sound will be emphasized(rear speaker sound will be attenuated).

BALANCE Control

Press the right button to emphasize right speaker sound(left speaker sound will be attenuated). When the left button is pressed, left speaker sound will be emphasized(right speaker sound will be attenuated).

• PHONE (if equipped)

Select this item to enter PHONE setup mode. Refer to “BLUETOOTH PHONE OPERATION” section for detailed information.

❊ “PHONE” menu is not available if the audio does not support *Bluetooth®* Wireless Technology features.

• CLOCK

Select this item to enter Clock setup mode. Adjust the hour using FOLDER, FOLDER button and press the TUNE button.

Adjust the minute using FOLDER, FOLDER button and press the OK button to complete and exit from clock adjustment mode.

Press the SETUP button for more than 1 seconds while in power off/on, you can enter the Clock setup mode directly.

• Return(⮌)

This function displays the previous MODE screen.

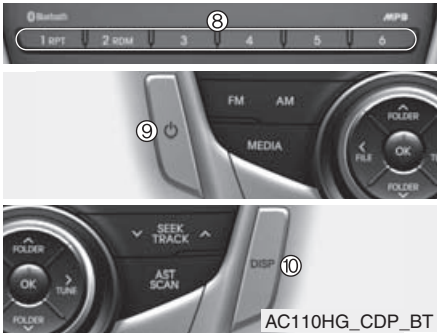

AC110HG_CDP_BT

8. PRESET Buttons

Push 1 ~ 6 buttons less than 0.8 seconds to play the channel saved in each button. Push Preset button for 0.8 seconds or longer to save current channel to the respective button with a beep.

9. ⏻ Button

- Turns on/off the set when the IGNITION SWITCH is on ACC or ON.

10. DISP Button

Turn ON/OFF the displayed data and light on LCD.

When LCD Display is turned OFF, Press any button to turn ON display.

AC110HG_CDP_BT

Using CD Player

1. MEDIA Button (CD)

If the CD is loaded, turns to CD mode. If no CD, it displays “No Media” for 3 seconds and returns to the previous mode.

2. TRACK Button

- Press SEEK TRACK button for less than 0.8 seconds to play from the beginning of current song.
- Press SEEK TRACK button for less than 0.8 seconds and press again within 1 second to play the previous song.
- Press SEEK TRACK button for 0.8 seconds or longer to initiate reverse direction high speed sound search of current song.
- Press SEEK TRACK button for less than 0.8 seconds to play the next song.
- Press SEEK TRACK button for 0.8 seconds or longer to initiate forward direction high speed sound search of current song.

3. SCAN Button

Play each song in the CD for 10 seconds. To cancel SCAN Play, press this button again.

4. OK Button

Press the OK button to play the select song.

5. INFO Button

Displays the information of the current CD TRACK(FILE) as below when the button is pressed each time.

- CDDA : Disc Title, Disc Artist, Track Title, Track Artist, Total Track.
- MP3/WMA : File Name, Title, Artist, Album, Folder, Total File.
  (not displayed if the information is not available on the DISC.)

AC610HG_CDC_BT

6. 1 RPT Button (REPEAT)

Press this button for less than 0.8 seconds to activate ‘RPT’ mode and more than 0.8 seconds to activate ‘FLD.RPT’ mode.

- RPT : Only a track(file) is repeatedly played back.
- FLD.RPT (MP3/WMA Only) : Only files in a folder are repeatedly played back.

❈ DISC RPT(CD Changer) : Repeats the entire DISC when this button is pressed for 0.8 seconds or longer.

7. 2 RDM Button (RANDOM)

Press this button for less than 0.8 seconds to activate ‘RDM’ mode and longer than 0.8 seconds to activate ‘ALL RDM’ mode.

- RDM : Only files/tracks in a folder/disc are played back in random sequence.
- ALL RDM(MP3/WMA Only) : All files in a disc are played back in random sequence.

8. DISC Button (CD changer : AC610/600HG)

- Preset 5 DISC ∨ Change button changes disc to the previous disc.
- Preset 6 DISC ∧ Change button changes disc to the next disc.

AC610HG_CDC_BT

9. ⏏ Button (CD Eject)

Push ⏏ button for less than 0.8 seconds to eject the CD during CD playback. This button is enabled when ignition switch is off.

- ALL EJECT (CD Changer : AC610/600HG)

Press this button for more than 0.8 seconds to eject all discs inside the deck in respective order.

10. CD Slot

Please face printed side upward and gently push in. When the ignition switch is on ACC or ON and power is off, power is automatically turned on if the CD is loaded. This CDP supports only 12cm CD. If VCD, Data CD are loaded, "Reading Error" message will appear and CD will be ejected.

AC110HG_CDP_BT

11. LOAD Button (CD changer : AC610/600HG)

Push LOAD button to load CDs to available CDC deck (from 1~6). Push LOAD button for more than 2 seconds to load into all available decks. The last CD will play. 10 seconds idle status will disable loading process.

12. FOLDER Button

- Press FOLDER ∨ button to move to child folder of the current folder and display the first song in the folder.
  Press OK button to move to the folder displayed. It will play the first song in the folder.
- Press ∧ FOLDER button to move to parent folder of the current folder and display the first song in the folder. Press OK button to move to the folder displayed.

13. Search Button

Press the > TUNE button to display the songs next to the currently played song. press the < FILE button to display the songs before to the currently played song.

AC110HG_CDP_BT

Using USB device

1. MEDIA Button (USB)

If USB is connected, it switches to the USB mode from the other mode to play the song files stored in the USB. If no CD and auxiliary device is not connected, it displays "No Media" for 3 seconds and returns to the previous mode.

2. TRACK Button

- Press SEEK TRACK button for less than 0.8 seconds to play from the beginning of current song.
- Press SEEK TRACK button for less than 0.8 seconds and press again within 1 second to play the previous song.
- Press SEEK TRACK button for 0.8 seconds or longer to initiate reverse direction high speed sound search of current song.
- Press SEEK TRACK button for less than 0.8 seconds to play the next song.
- Press SEEK TRACK button for 0.8 seconds or longer to initiate forward direction high speed sound search of current song.

3. SCAN Button

Play each song in the CD for 10 seconds. To cancel SCAN Play, press this button again.

4. OK Button

Press the OK button to play the select song.

5. INFO Button

Displays the information of the file currently played in the order of File Name, Title, Artist, Album, Folder, Total File, Normal Display.

(Displays no information if the file has no song information.)

AC110HG_CDP_BT

6. 1 RPT Button (REPEAT)

Press this button for less than 0.8 seconds to activate 'RPT' mode and longer than 0.8 seconds to activate 'FLD.RPT' mode.

- RPT : Only the current file is repeatedly played back.
- FLD.RPT : All files in a folder are repeatedly played back.

7. 2 RDM Button (RANDOM)

Press this button for less than 0.8 seconds to activate ‘RDM’ mode and more than 0.8 seconds to activate ‘ALL RDM’ mode.

- FLD.RDM : Only files in a folder are played back in a random sequence.
- ALL RDM : All files in a USB memory are played back in the random sequence.

AC110HG_CDP_BT

8. FOLDER Button

- Press FOLDER button to move to child folder of the current folder and display the first song in the folder.
  Press OK button to move to the folder displayed. It will play the first song in the folder.
- Press FOLDER button to move to parent folder display the first song in the folder.
  Press OK button to move to the folder displayed.

9. Search Button

Press the TUNE button to display the songs next to the currently played song.
press the FILE button to display the songs before to the currently played song.

⚠ CAUTION IN USING USB DEVICE

- *To use an external USB device, make sure the device is not connected when starting up the vehicle. Connect the device after starting up.*
- *If you start the engine when the USB device is connected, it may damage the USB device. (USB flashdrives are very sensitive to electric shock.)*
- *If the engine is started up or turned off while the external USB device is connected, the external USB device may not work.*
- *It may not play inauthentic MP3 or WMA files.*
  1) *It can only play MP3 files with the compression rate between 8Kbps~320Kbps.*
  2) *It can only play WMA music files with the compression rate between 8Kbps~320Kbps.*
- *Take precautions for static electricity when connecting or disconnecting the external USB device.*

(Continued)

(Continued)

- *An encrypted MP3 PLAYER is not recognizable.*
- *Depending on the condition of the external USB device, the connected external USB device can be unrecognizable.*
- *When the formatted byte/sector setting of External USB device is not either 512BYTE or 2048BYTE, then the device will not be recognized.*
- *Use only a USB device formatted to FAT 12/16/32.*
- *USB devices without USB I/F authentication may not be recognizable.*
- *Make sure the USB connection terminal does not come in contact with the human body or other objects.*
- *If you repeatedly connect or disconnect the USB device in a short period of time, it may break the device.*
- *You may hear a strange noise when connecting or disconnecting a USB device.*

(Continued)

(Continued)

- *If you disconnect the external USB device during playback in USB mode, the external USB device can be damaged or may malfunction. Therefore, disconnect the external USB device when the audio is turned off or in another mode. (e.g, Radio or CD)*
- *Depending on the type and capacity of the external USB device or the type of the files stored in the device, there is a difference in the time taken for recognition of the device.*
- *Do not use the USB device for purposes other than playing music files.*
- *Playing videos through the USB is not supported.*
- *Use of USB accessories such as rechargers or heaters using USB I/F may lower performance or cause trouble.*
- *If you use devices such as a USB hub purchased separately, the vehicle's audio system may not recognize the USB device. In that case, connect the USB device directly to the multimedia terminal of the vehicle.*

(Continued)

(Continued)

- *If the USB device is divided by logical drives, only the music files on the highest-priority drive are recognized by car audio.*
- *Devices such as MP3 Player/ Cellular phone/Digital camera can be unrecognizable by standard USB I/F can be unrecognizable.*
- *Charging through the USB may not be supported in some mobile devices.*

  ✳ *A car exclusive cable (sold separately) is required to use the iPod®.*
- *Some non-standard USB devices (METAL COVER TYPE USB) can be unrecognizable.*
- *Some USB flash memory readers (such as CF, SD, microSD, etc.) or external-HDD type devices can be unrecognizable.*
- *Music files protected by DRM (DIGITAL RIGHTS MANAGEMENT) are not recognizable.*
- *The data in the USB memory may be lost while using this audio. Always back up important data on a personal storage device.*

(Continued)

(Continued)

- *A SD-to-USB adapter may not work with the car audio system.*
- *Please avoid using USB memory products which can be used as key chains or cellular phone accessories as they could cause damage to the USB jack. Please make certain only to use plug type connector products as shown below.*

Using iPod®

✻ iPod® is a trademark of Apple Inc.

1. MEDIA Button (iPod®)

If iPod® is connected, it switches to the iPod® mode from the previous mode to play the song files stored in the iPod®.

If there is no iPod® connected, then it displays the message "No Media" for 3 seconds and returns to the previous mode.

2. TRACK Button

- Press SEEK TRACK button for less than 0.8 seconds to play from the beginning of current song.
- Press SEEK TRACK button for less than 0.8 seconds and press again within 1 second to play the previous song.
- Press SEEK TRACK button for 0.8 seconds or longer to initiate reverse direction high speed sound search of current song.
- Press SEEK TRACK button for less than 0.8 seconds to play the next song.
- Press SEEK TRACK button for 0.8 seconds or longer to initiate forward direction high speed sound search of current song.

3. INFO Button (iPod®)

Displays the information of the file currently played in the order of Title, Artist, Album, Normal Display.
(Displays no information if the file has no song information.)

4. OK Button

Press the OK button to play the select song.

5. 1 RPT Button (REPEAT)

Repeats the song currently played.

6. 2 RDM Button (RANDOM)

- Press this button for less than 0.8 seconds to shuffle order of all songs in current category. (Song Random)
- Press this button for 0.8 seconds or longer to shuffle order of albums in current category. (Album Random)
- To cancel RANDOM Play, press this button again.

7. CATEGORY Button

Moves to the upper category from currently played category of the iPod®.

To move to (play) the category (song) displayed, press FOLDER, FOLDER button.

You will be able to search through the lower category of the selected category.

✻ NOTICE FOR USING THE iPod® DEVICE

- Some iPod® models might not support the communication protocol and the files will not be played.
  Supported iPod® models:
  - iPod® Mini
  - iPod® 4th (Photo) ~ 6th (Classic) generation
  - iPod® Nano 1st~4th generation
  - iPod® Touch 1st~2nd generation
- The order of search or playback of songs in the iPod® can be different from the order searched in the audio system.
- If the iPod® disabled due to its own malfunction, reset the iPod®. (Reset: Refer to iPod® manual)
- An iPod® may not operate normally on low battery.
- Some iPod® devices, such as the iPhone, can be connected through the *Bluetooth*® Wireless Technology interface. The device must have audio *Bluetooth*® Wireless Technology capability (such as for stereo headphone *Bluetooth*® Wireless Technology). The device can play, but it will not be controlled by the audio system.

⚠ CAUTION IN USING THE iPod® DEVICE

- *The Hyundai iPod® Power Cable is needed in order to operate iPod® with the audio buttons on the audio system. The USB cable provided by Apple may cause malfunction and should not be used for Hyundai vehicles.*
  ✻ The Hyundai iPod® Power Cable may be purchased through your Hyundai Dealership.
- *When connecting iPod® with the iPod® Power Cable, insert the connector to the multimedia socket completely. If not inserted completely, communications between iPod® and audio may be interrupted.*
- *When adjusting the sound effects of the iPod® and the audio system, the sound effects of both devices will overlap and might reduce or distort the quality of the sound.*
- *Deactivate (turn off) the equalizer function of an iPod® when adjusting the audio system's volume, and turn off the equalizer of the audio system when using the equalizer of an iPod®.*

(Continued)

(Continued)

- *When the iPod® cable is connected, the system can be switched to AUX mode even without iPod® device and may cause noise. Disconnect the iPod® cable when you are not using the iPod® device.*
- *When not using iPod® with car audio, detach the iPod® cable from iPod. Otherwise, iPod® may remain in accessory mode, and may not work properly.*
- *Detachable USB/AUX*

✻ When connecting the iPod®, use the USB/AUX terminals.
✻ When disconnecting the iPod®, disconnect both the USB/AUX terminal.

- *All-in-one USB/AUX*

✻ The iPod® exclusive cable must be connected to both the USB/AUX terminals for iPod® charging and operations to be supported.

BLUETOOTH® WIRELESS TECHNOLOGY PHONE OPERATION (IF EQUIPPED)

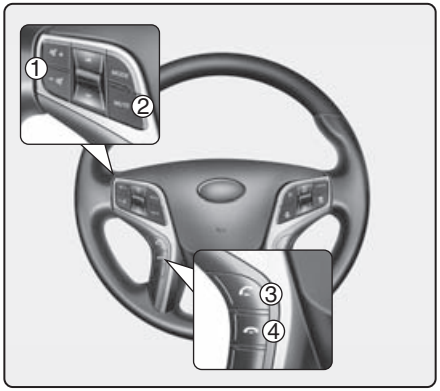

1. VOLUME button : Raises or lowers speaker volume.
2. MUTE button : Mute the microphone during a call.
3. button : Places and transfers calls.
4. button : Ends calls or cancels functions.

■ What is *Bluetooth®* Wireless Technology?

Bluetooth® Wireless Technology is a wireless technology that allows multiple devices to be connected in a short range, low-powered devices like hands-free, stereo headset, wireless remote control, etc. For more information, visit the *Bluetooth®* Wireless Technology website at www.Bluetooth.com

■ General Features

- This audio system supports *Bluetooth®* Wireless Technology hands-free and stereo-headset features.
  - HANDS-FREE feature: Making or receiving calls wirelessly.
  - STEREO-HEADSET feature: Playing music from cellular phones (that supports A2DP feature) wirelessly.

✻ NOTICE

- **The phone must be paired to the system before using *Bluetooth®* Wireless Technology features.**
- **Only one selected (connected) cellular phone can be used with the system at a time.**
- **Some phones are not fully compatible with this system.**

■ Phone Setup

All *Bluetooth®* Wireless Technology-related operations can be performed in PHONE menu.

1) Push the SETUP button to enter SETUP mode.

2) Select “PHONE” item by using FILE, TUNE button, then push the OK button.

3) Select desired item by using FILE, TUNE button, then push the OK button.

• Pairing a phone

Before using *Bluetooth®* Wireless Technology features, the phone must be paired (registered) with the audio system. Up to 5 phones can be paired with the system.

NOTE:

- **The pairing procedure of the phone varies according to each phone model. Before attempting to pair phone, please see your phone's User's Guide for instructions.**
- **Once pairing with the phone is completed, there is no need to pair with that phone again unless the phone is deleted manually from the audio system (refer "Deleting a Phone" section) or the vehicle's information is removed from the phone.**

1. Press SETUP button to enter SETUP mode.
2. Select "Phone", then "Pair" in PHONE menu.
3. The audio displays "searching ---- passkey: 0000"
4. Search the *Bluetooth®* Wireless Technology system on your phone. Your phone should display your [vehicle model name] on the *Bluetooth®* Wireless Technology device list. Then attempt pairing on your phone.

NOTE:

If the phone is paired to two or more vehicles of the same model, i.e. both vehicles are HYUNDAI AZERA/GRANDEUR, some phones may not handle *Bluetooth®* Wireless Technology devices of that name correctly. In this case, you may need to change the name displayed on your phone from AZERA/ GRANDEUR to AZERA1/GRANDEUR1 and AZERA2/GRANDEUR2.

Refer to your phone's User's Guide, or contact your cellular carrier or phone manufacturer for instructions.

• Connecting a phone

When the *Bluetooth®* Wireless Technology system is enabled, the phone previously used is automatically selected and re-connected. If you want to select different phone previously paired, the phone can be selected through "Select Phone" menu.

Only a selected phone can be used with the hands-free system at a time.

1. Press SETUP button to enter SETUP mode.
2. Select "Phone", then "Select" in PHONE menu.
3. Select desired phone name from the list shown.

• Deleting a Phone

The paired phone can be deleted.

- When the phone is deleted, all the information associated with that phone is also deleted (including phonebook).
- If you want to use the deleted phone with the audio system again, pairing procedure must be completed once more.

1. Press SETUP button to enter SETUP mode.
2. Select "Phone", then "Delete" in PHONE menu.
3. Select desired phone name from the list shown.

• Changing Priority

If several phones are paired with the audio system, the system attempts to connect following order when the *Bluetooth®* Wireless Technology system is enabled:

1) "Priority" checked phone.
2) Previously connected phone
3) Gives up auto connection.

1. Press SETUP button to enter SETUP mode.
2. Select "Phone", then "Priority" in PHONE menu.
3. Select desired phone name from the list shown.

• Turning *Bluetooth®* Wireless Technology ON/OFF

Bluetooth® Wireless Technology Wireless Technology system can be enabled (ON) or disabled (OFF) by this menu.

- If *Bluetooth®* Wireless Technology is disabled, all the commands related to *Bluetooth®* Wireless Technology system prompts whether you wish to turn *Bluetooth®* Wireless Technology ON or not.

1. Press SETUP button to enter SETUP mode.
2. Select "Phone", then "BT Off" in PHONE menu.

■ Receiving a Phone Call

When receiving a phone call, a ringtone is audible from speakers and the audio system changes into telephone mode.

When receiving a phone call, "Incoming" message and incoming phone number (if available) are displayed on the audio.

• To Answer a Call:

- Press button on the steering wheel.

• To Reject a Call:

- Press button on the steering wheel.

• To Adjust Ring Volume:

- Use VOLUME buttons on the steering wheel.

• To Transfer a Call to the Phone (Private Call):

- Press and hold button on the steering wheel until the audio system transfers a call to the phone.

■ Talking on the Phone

When talking on the phone, "Active Calls" message and the other party's phone number (if available) are displayed on the audio.

• To Mute the Microphone

- Press MUTE button on the steering wheel.

• To Finish a Call

- Press button on the steering wheel.

■ Making a Phone Call

A Call Back can be made by pressing button on the steering wheel.

- This is the same function as using the button solely on the cellular phone.

NOTE:

Some phone models require pressing button twice to make a call.

✻ NOTICE

In the following situations, you or the other party may have difficulty hearing each other:

1. **Speaking at the same time, your voice may not reach each other parties. (This is not a malfunction.) Speak alternately with the other party on the phone.**
2. **Keep the *Bluetooth®* Wireless Technology volume to a low level. High-level volume may result in distortion and echo.**
3. **When driving on a rough road.**
4. **When driving at high speeds.**
5. **When the window is open.**
6. **When the air conditioning vents are facing the microphone.**
7. **When the sound of the air conditioning fan is loud.**

■ *Bluetooth®* Wireless Technology Audio Music Streaming

This audio system supports A2DP (Audio Advanced Distribution Profile) and AVRCP (Audio Video Remote Control Profile).

Both profiles are available for listening to the MP3 music via *Bluetooth®* Wireless Technology cellular phone supporting above *Bluetooth®* Wireless Technology profiles.

To play MP3 music from the *Bluetooth®* Wireless Technology cellular phone, press the MEDIA button until “MP3 Play” is displayed on the LCD.

Then try playing music by phone.

When playing music from the *Bluetooth®* Wireless Technology cellular phone, the head unit displays MP3 MODE.

NOTE:

- **Not only MP3 files, all the sounds that the phone supports can be heard by the audio system.**
- **The *Bluetooth®* Wireless Technology cellular phones shall feature A2DP and AVRCP functions.**
- **Some A2DP and AVRCP *Bluetooth®* Wireless Technology cellular phones may not play music through the head unit on first try. Please try the below;**

  i.e : Menu➡Filemanager➡Music➡ Option➡Play via Bluetooth
- **Please refer to User's Guide of your phone for more.**

  To stop music, try stop playing music from the phone then change the audio mode to other than “MP3 Play” mode (e.g. FM, AM, CD, etc.)

⚠ CAUTION IN USING *BLUETOOTH®* WIRELESS TECHNOLOGY CELLULAR PHONE

- *Do not use a cellular phone or perform Bluetooth® Wireless Technology settings (e.g. pairing a phone) while driving.*
- *Some Bluetooth® Wireless Technology-enabled phones may not be recognized by the system or fully compatible with the system.*
- *Before using Bluetooth® Wireless Technology related features of the audio system, refer your phone's User's Manual for phone-side Bluetooth® Wireless Technology operations.*
- *The phone must be paired to the audio system to use Bluetooth® Wireless Technology related features.*
- *You will not be able to use the hands-free feature when your phone (in the car) is outside of the cellular service area (e.g. in a tunnel, in a underground, in a mountainous area, etc.).*

(Continued)

(Continued)

- *If the cellular phone signal is poor or the vehicles interior noise is too loud, it may be difficult to hear the other person's voice during a call.*
- *Do not place the phone near or inside metallic objects, otherwise communications with Bluetooth® Wireless Technology system or cellular service stations can be disturbed.*
- *While a phone is connected through Bluetooth® Wireless Technology your phone may discharge quicker than usual for additional Bluetooth® Wireless Technology-related operations.*
- *Some cellular phones or other devices may cause interference noise or malfunction to audio system. In this case, store the device in a different location may resolve the situation.*
- *Please save your phone name in English, or your phone name may not be displayed correctly.*

Before driving / 5-3
Key / 5-4
Engine Start/Stop button / 5-7
Automatic transaxle / 5-12
Brake system / 5-18
Cruise control system / 5-36
Smart cruise control system / 5-40
Economical operation / 5-53
Special driving conditions / 5-55
Winter driving / 5-59
Vehicle weight / 5-63

Driving your vehicle

5

Trailer towing / 5-64

⚠ WARNING - ENGINE EXHAUST CAN BE DANGEROUS!

Engine exhaust fumes can be extremely dangerous. If, at any time, you smell exhaust fumes inside the vehicle, open the windows immediately.

- **Do not inhale exhaust fumes.**
  Exhaust fumes contain carbon monoxide, a colorless, odorless gas that can cause unconsciousness and death by asphyxiation.
- **Be sure the exhaust system does not leak.**
  The exhaust system should be checked whenever the vehicle is raised to change the oil or for any other purpose. If you hear a change in the sound of the exhaust or if you drive over something that strikes the underneath side of the car, have the exhaust system checked as soon as possible by an authorized HYUNDAI dealer.
- **Do not run the engine in an enclosed area.**
  Letting the engine idle in your garage, even with the garage door open, is a hazardous practice. Never run the engine in your garage any longer than it takes to start the engine and back the car out.
- **Avoid idling the engine for prolonged periods with people inside the car.**
  If it is necessary to idle the engine for a prolonged period with people inside the car, be sure to do so only in an open area with the air intake set at "Fresh" and fan operating at one of the higher speeds so fresh air is drawn into the interior.

If you must drive with the trunk lid open because you are carrying objects that make this necessary:

1. Close all windows.
2. Open side vents.
3. Set the air intake control at "Fresh", the air flow control at "Floor" or "Face" and the fan at one of the higher speeds.

To assure proper operation of the ventilation system, be sure the ventilation air intakes located just in front of the windshield are kept clear of snow, ice, leaves or other obstructions.

BEFORE DRIVING

Before entering vehicle

- Be sure that all windows, outside mirror(s), and outside lights are clean.
- Check the condition of the tires.
- Check under the vehicle for any sign of leaks.
- Be sure there are no obstacles behind you if you intend to back up.

Necessary inspections

Fluid levels, such as engine oil, engine coolant, brake fluid, and washer fluid should be checked on a regular basis, with the exact interval depending on the fluid. Further details are provided in section 7, “Maintenance”.

⚠ WARNING

Driving while distracted can result in a loss of vehicle control, that may lead to an accident, severe personal injury, and death. The driver’s primary responsibility is in the safe and legal operation of a vehicle, and use of any handheld devices, other equipment, or vehicle systems which take the driver’s eyes, attention and focus away from the safe operation of a vehicle or which are not permissible by law should never be used during operation of the vehicle.

Before starting

- Close and lock all doors.
- Position the seat so that all controls are easily reached.
- Adjust the inside and outside rearview mirrors.
- Be sure that all lights work.
- Check all gauges.
- Check the operation of warning lights when the ignition switch is turned to the ON position.
- Release the parking brake and make sure the brake warning light goes out.

For safe operation, be sure you are familiar with your vehicle and its equipment.

⚠ WARNING

All passengers must be properly belted whenever the vehicle is moving. Refer to “Seat belts” in section 3 for more information on their proper use.

⚠ WARNING

Always check the surrounding areas near your vehicle for people, especially children, before putting a car into D (Drive) or R (Reverse).

⚠ WARNING - Driving under the influence of alcohol or drugs

Drinking and driving is dangerous. Drunk driving is the number one contributor to the highway death toll each year. Even a small amount of alcohol will affect your reflexes, perceptions and judgment. Driving while under the influence of drugs is as dangerous or more dangerous than driving drunk.

You are much more likely to have a serious accident if you drink or take drugs and drive.

If you are drinking or taking drugs, don't drive. Do not ride with a driver who has been drinking or taking drugs. Choose a designated driver or call a cab.

⚠ WARNING

- **When you intend to park or stop the vehicle with the engine on, be careful not to depress the accelerator pedal for a long period of time. It may overheat the engine or exhaust system and cause fire.**
- **When you make a sudden stop or turn the steering wheel rapidly, loose objects may drop on the floor and it could interfere with the operation of the foot pedals, possibly causing an accident. Keep all things in the vehicle safely stored.**
- **If you do not focus on driving, it may cause an accident. Be careful when operating what may disturb driving such as audio or heater. It is the responsibility of the driver to always drive safely.**

KEY

OTF050001

Illuminated ignition switch

Whenever a front door is opened, the ignition switch will be illuminated for your convenience, provided the ignition switch is not in the ON position. The light will go off immediately when the ignition switch is turned on or go off after about 30 seconds when the door is closed.

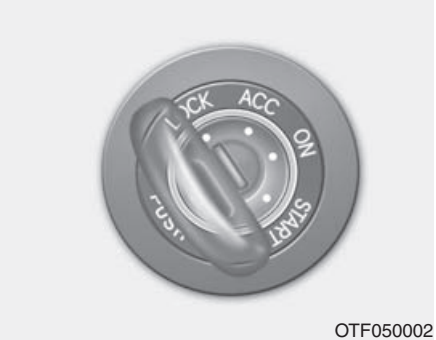

OTF050002

Ignition switch position

LOCK

The steering wheel locks to protect against theft. The ignition key can be removed only in the LOCK position. When turning the ignition switch to the LOCK position, push the key inward at the ACC position and turn the key toward the LOCK position.

ACC (Accessory)

The steering wheel is unlocked and electrical accessories are operative.

✻ NOTICE

If difficulty is experienced turning the ignition switch to the ACC position, turn the key while turning the steering wheel right and left to release the tension.

ON

The warning lights can be checked before the engine is started. This is the normal running position after the engine is started.

Do not leave the ignition switch ON if the engine is not running to prevent the battery from discharging.

START

Turn the ignition switch to the START position to start the engine. The engine will crank until you release the key; then it returns to the ON position. The brake warning lamp can be checked in this position.

⚠ WARNING - Ignition switch

- **Never turn the ignition switch to LOCK or ACC while the vehicle is moving. This would result in loss of directional control and braking function, which could cause an accident.**
- **The anti-theft steering column lock is not a substitute for the parking brake. Before leaving the driver's seat, always make sure the shift lever is engaged in P (Park), set the parking brake fully and shut the engine off. Unexpected and sudden vehicle movement may occur if these precautions are not taken.**
- **Never reach for the ignition switch, or any other controls through the steering wheel while the vehicle is in motion. The presence of your hand or arm in this area could cause a loss of vehicle control, an accident and serious bodily injury or death.**
- **Do not place any movable objects around the driver's seat as they may move while driving, interfere with the driver and lead to an accident.**

Starting the engine

⚠ WARNING

- **Always wear appropriate shoes when operating your vehicle. Unsuitable shoes (high heels, ski boots,etc.) may interfere with your ability to use the brake and accelerator pedal.**
- **Do not start the vehicle with the accelerator pedal depressed. The vehicle can move and lead to an accident.**
- **Wait until the engine rpm is normal. The vehicle may suddenly move if the brake pedal is released when the rpm is high.**

1. Make sure the parking brake is applied.
2. Place the transaxle shift lever in P (Park). Depress the brake pedal fully.
   You can also start the engine when the shift lever is in the N (Neutral) position.
3. Turn the ignition switch to START and hold it there until the engine starts (a maximum of 10 seconds), then release the key.

It should be started ***without depressing the accelerator.***

4. Do not wait for the engine to warm up while the vehicle remains stationary.
   Start driving at moderate engine speeds. (Steep accelerating and decelerating should be avoided.)

⚠ CAUTION

If the engine stalls while you are in motion, do not attempt to move the shift lever to the P (Park) position. If traffic and road conditions permit, you may put the shift lever in the N (Neutral) position while the vehicle is still moving and turn the ignition switch to the START position in an attempt to restart the engine.

⚠ CAUTION

- ***Do not engage the starter for more than 10 seconds. If the engine stalls or fails to start, wait 5 to 10 seconds before re-engaging the starter. Improper use of the starter may damage it.***
- ***Do not turn the ignition switch to the START position with the engine running. It may damage the starter.***

ENGINE START/STOP BUTTON

OHG050004

Illuminated ENGINE START/STOP button

Whenever the front door is opened, the ENGINE START/STOP button will illuminate for your convenience. The light will go off after about 30 seconds when the door is closed. It will also go off immediately when the theft-alarm system is armed.

ENGINE START/STOP button position

OFF

White

To turn off the engine (START/RUN position) or vehicle power (ON position), press the ENGINE START/STOP button with the shift lever in the P (Park) position. When you press the ENGINE START/STOP button without the shift lever in the P (Park) position, the ENGINE START/STOP button will not change to the OFF position but to the ACC position.

Vehicles equipped with anti-theft steering column lock

The steering wheel locks when the ENGINE START/STOP button is in the OFF position to protect you against theft. It locks when the door is opened.

If the steering wheel is not locked properly when you open the driver's door, the warning chime will sound. Try locking the steering wheel again. If the problem is not solved, have it checked by an authorized HYUNDAI dealer.

In addition, if the ENGINE START/STOP button is in the OFF position after the driver's door is opened, the steering wheel will not lock and the warning chime will sound. In such a situation, close the door. Then the steering wheel will lock and the warning chime will stop.

✻ NOTICE

If the steering wheel doesn't unlock properly, the ENGINE START/STOP button will not work. Press the ENGINE START/STOP button while turning the steering wheel right and left to release the tension.

⚠ CAUTION

You are able to turn off the engine (START/RUN) or vehicle power (ON), only when the vehicle is not in motion. In an emergency situation while the vehicle is in motion, you are able to turn the engine off and to the ACC position by pressing the ENGINE START/STOP button for more than 2 seconds or 3 times successively within 3 seconds. If the vehicle is still moving, you can restart the engine without depressing the brake pedal by pressing the ENGINE START/STOP button with the shift lever in the N (Neutral) position.

ACC(Accessory)

Orange

Press the ENGINE START/STOP button while it is in the OFF position without depressing the brake pedal.

The steering wheel unlocks (if equipped with anti-theft steering column lock) and electrical accessories are operational.

If the ENGINE START/STOP button is in the ACC position for more than 1 hour, the button turns off automatically to prevent battery discharge.

ON

Blue

Press the ENGINE START/STOP button while it is in the ACC position without depressing the brake pedal.

The warning lights can be checked before the engine is started. Do not leave the ENGINE START/STOP button in the ON position for a long time. The battery may discharge, because the engine is not running.

START/RUN

Not illuminated

To start the engine, depress the brake pedal and press the ENGINE START/ STOP button with the shift lever in the P (Park) or the N (Neutral) position. For your safety, start the engine with the shift lever in the P (Park) position.

✻ NOTICE

If you press the ENGINE START/STOP button without depressing the brake pedal for automatic transaxle vehicles, the engine will not start and the ENGINE START/STOP button changes as follow: OFF ➔ACC ➔ ON ➔ OFF or ACC

✻ NOTICE

If you leave the ENGINE START/ STOP button in the ACC or ON position for a long time, the battery will discharge.

⚠ WARNING

- **Never press the ENGINE START/STOP button while the vehicle is in motion. This would result in loss of directional control and braking function, which could cause an accident.**
- **The anti-theft steering column lock (if equipped) is not a substitute for the parking brake. Before leaving the driver's seat, always make sure the shift lever is engaged in P (Park), set the parking brake fully and shut the engine off. Unexpected and sudden vehicle movement may occur if these precautions are not taken.**

(Continued)

(Continued)

- **Never reach for the ENGINE START/STOP button or any other controls through the steering wheel while the vehicle is in motion. The presence of your hand or arm in the area could cause loss of vehicle control, an accident and serious bodily injury or death.**
- **Do not place any movable objects around the driver's seat as they may move while driving, interfere with the driver and lead to an accident.**

Starting the engine

⚠ WARNING

- **Always wear appropriate shoes when operating your vehicle. Unsuitable shoes (high heels, ski boots, etc.) may interfere with your ability to use the brake and accelerator pedal.**
- **Do not start the vehicle with the accelerator pedal depressed. The vehicle can move and lead to an accident.**
- **Wait until the engine rpm is normal. The vehicle may suddenly move if the brake pedal is released when the rpm is high.**

✻ NOTICE - Kick down mechanism (if equipped)

If your vehicle is equipped with a kick down mechanism in the accelerator pedal, it prevents you from driving at full throttle unintentionally by making the driver require increased effort to depress the accelerator pedal. However, if you depress the pedal more than approximately 80%, the vehicle can be at full throttle and the accelerator pedal will be easier to depress. This is not a malfunction but a normal condition.

1. Carry the smart key or leave it inside the vehicle.
2. Make sure the parking brake is firmly applied.
3. Place the shift lever in the P (Park) position.
4. Depress the brake pedal.
5. Press the ENGINE START/STOP button.

It should be started without depressing the accelerator.

6. Do not wait for the engine to warm up while the vehicle remains stationary.

   Start driving at moderate engine speeds. (Steep accelerating and decelerating should be avoided.)

⚠ CAUTION

If the engine stalls while you are in motion, do not attempt to move the shift lever to the P (Park) position. If traffic and road conditions permit, you may put the shift lever in the N (Neutral) position while the vehicle is still moving and press the ENGINE START/STOP button in an attempt to restart the engine.

- Even if the smart key is in the vehicle, if it is far away from you, the engine may not start.
- When the ENGINE START/STOP button is in the ACC position or above, if any door is opened, the system checks for the smart key. If the smart key is not in the vehicle, the warning "Key is not in vehicle" will illuminate on the LCD display. And if all doors are closed, the chime will sound for 5 seconds. The warning will turn off while the vehicle is moving. Always have the smart key with you.

⚠ WARNING

The engine will start by pressing the ENGINE START/STOP button, only when the smart key is in the vehicle. Never allow children or any person who is unfamiliar with the vehicle to touch the ENGINE START/STOP button or related parts.

✻ NOTICE

- **If the battery is weak or the smart key does not work correctly, you can start the engine by pressing the ENGINE START/STOP button directly with the smart key.**
- **When the stop lamp fuse is blown, you can not start the engine normally. Replace the fuse with a new one. If you are not able to replace the fuse, you can start the engine by pressing the ENGINE START/STOP button for 10 seconds with the ENGINE START/STOP button in the ACC position. The engine can start without depressing the brake pedal. But for your safety always depress the brake pedal before starting the engine.**

⚠ CAUTION

Do not press the ENGINE START/STOP button for more than 5 seconds except when the stop lamp fuse is disconnected.

AUTOMATIC TRANSAXLE

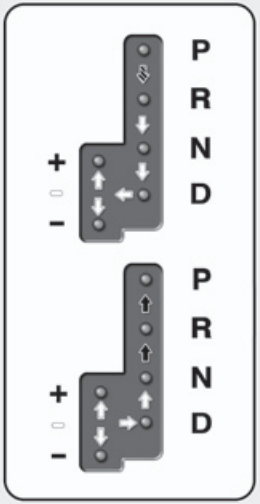

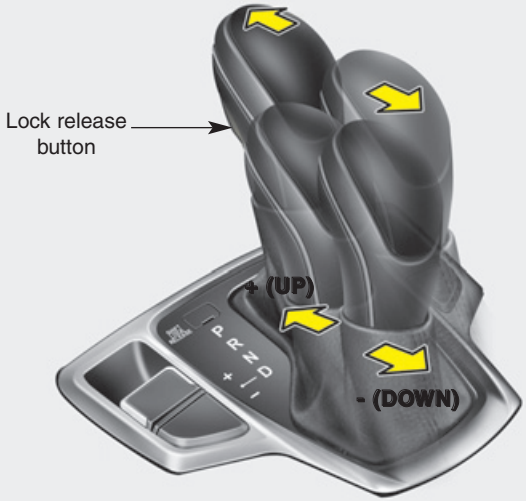

Depress the brake pedal and the lock release button when shifting.
(If the shift lock system is not equipped, it is not necessary to depress the brake pedal. However, it is recommended to depress the brake pedal to avoid inadvertent movement of the vehicle.)

Press the lock release button when shifting.

The shift lever can be shifted freely.

OHG050012L

Automatic transaxle operation

The automatic transaxle has 6 forward speeds and one reverse speed. The individual speeds are selected automatically, depending on the position of the shift lever.

✻ NOTICE

The first few shifts on a new vehicle, if the battery has been disconnected, may be somewhat abrupt. This is a normal condition, and the shifting sequence will adjust after shifts are cycled a few times by the TCM (Transaxle Control Module) or PCM (Powertrain Control Module).

For smooth operation, depress the brake pedal when shifting from N (Neutral) to a forward or reverse gear.

⚠ WARNING - Automatic transaxle

- **Always check the surrounding areas near your vehicle for people, especially children, before shifting a car into D (Drive) or R (Reverse).**
- **Before leaving the driver's seat, always make sure the shift lever is in the P (Park) position; then set the parking brake fully and shut the engine off. Unexpected and sudden vehicle movement can occur if these precautions are not followed in the order identified.**
- **Do not use the engine brake (shifting from a high gear to lower gear) rapidly on slippery roads. The vehicle may slip causing an accident.**

⚠ CAUTION

- ***To avoid damage to your transaxle, do not accelerate the engine in R (Reverse) or any forward gear position with the brakes on.***
- ***When stopped on an incline, do not hold the vehicle stationary with engine power. Use the service brake or the parking brake.***
- ***Do not shift from N (Neutral) or P (Park) into D (Drive), or R (Reverse) when the engine is above idle speed.***

Transaxle ranges

The indicator in the instrument cluster displays the shift lever position when the ignition switch is in the ON position.

P (Park)

Always come to a complete stop before shifting into P (Park). This position locks the transaxle and prevents the drive wheels from rotating.

⚠ WARNING

- **Shifting into P (Park) while the vehicle is in motion will cause the drive wheels to lock which will cause you to lose control of the vehicle.**
- **Do not use the P (Park) position in place of the parking brake. Always make sure the shift lever is latched in the P (Park) position and set the parking brake fully.**
- **Never leave a child unattended in a vehicle.**

⚠ CAUTION

The transaxle may be damaged if you shift into P (Park) while the vehicle is in motion.

R (Reverse)

Use this position to drive the vehicle backward.

⚠ CAUTION

Always come to a complete stop before shifting into or out of R (Reverse); you may damage the transaxle if you shift into R (Reverse) while the vehicle is in motion, except as explained in "Rocking the vehicle" in this section.

N (Neutral)

The wheels and transaxle are not engaged. The vehicle will roll freely even on the slightest incline unless the parking brake or service brakes are applied.

⚠ WARNING

Do not drive with the shift lever in N (Neutral).

The engine brake will not work and lead to an accident.

D (Drive)

This is the normal forward driving position. The transaxle will automatically shift through a 6-gear sequence, providing the best fuel economy and power.

For extra power when passing another vehicle or climbing grades, depress the accelerator pedal fully (more than 80%) until the kick down mechanism works with a clicking noise, at which time the transaxle will automatically downshift to the next lower gear.

✻ NOTICE

- **Always come to a complete stop before shifting into D (Drive).**
- **A clicking noise heard from the kick down mechanism by depressing the accelerator pedal fully is a normal condition.**

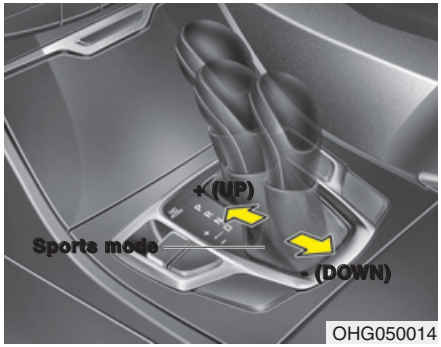

OHG050014

Sports mode

Whether the vehicle is stationary or in motion, sports mode is selected by pushing the shift lever from the D (Drive) position into the manual gate. To return to D (Drive) range operation, push the shift lever back into the main gate.

In sports mode, moving the shift lever backwards and forwards will allow you to make gearshifts rapidly.

Up (+) : Push the lever forward once to shift up one gear.

Down (-) : Pull the lever backwards once to shift down one gear.

✻ NOTICE

- **In sports mode, the driver must execute upshifts in accordance with road conditions, taking care to keep the engine speed below the red zone.**
- **In sports mode, only the 6 forward gears can be selected. To reverse or park the vehicle, move the shift lever to the R (Reverse) or P (Park) position as required.**
- **In sports mode, downshifts are made automatically when the vehicle slows down. When the vehicle stops, 1st gear is automatically selected.**
- **In sports mode, when the engine rpm approaches the red zone shift points are varied to upshift automatically.**
- **To maintain the required levels of vehicle performance and safety, the system may not execute certain gearshifts when the shift lever is operated.**
- **When driving on a slippery road, push the shift lever forward into the +(up) position. This causes the transaxle to shift into the 2nd gear which is better for smooth driving on a slippery road. Push the shift lever to the -(down) side to shift back to the 1st gear.**

Shift lock system

For your safety, the automatic transaxle has a shift lock system which prevents shifting the transaxle from P (Park) into R (Reverse) unless the brake pedal is depressed.

To shift the transaxle from P (Park) into R (Reverse):

1. Depress and hold the brake pedal.
2. Start the engine or turn the ignition switch to the ON position.
3. Move the shift lever.

If the brake pedal is repeatedly depressed and released with the shift lever in the P (Park) position, a chattering noise near the shift lever may be heard. This is a normal condition.

⚠ WARNING

Always fully depress the brake pedal before and while shifting out of the P (Park) position into another position to avoid inadvertent motion of the vehicle which could injure persons in or around the car.

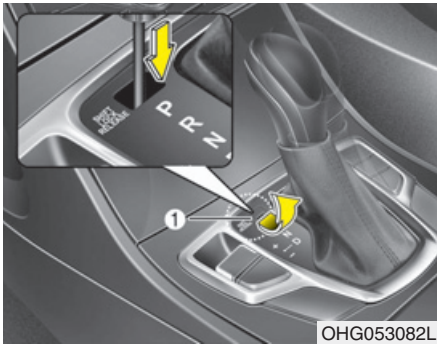

OHG053082L

Shift-lock override

If the shift lever cannot be moved from the P (Park) position into R (Reverse) position with the brake pedal depressed, continue depressing the brake, then do the following:

1. Carefully remove the cap (1) covering the shift-lock override access hole.
2. Insert a screwdriver into the access hole and press down on the screwdriver.
3. Move the shift lever.
4. Have your vehicle inspected by an authorized HYUNDAI dealer immediately.

Ignition key interlock system (if equipped)

The ignition key cannot be removed unless the shift lever is in the P (Park) position.

Good driving practices

- Never move the shift lever from P (Park) or N (Neutral) to any other position with the accelerator pedal depressed.
- Never move the shift lever into P (Park) when the vehicle is in motion.
- Be sure the car is completely stopped before you attempt to shift into R (Reverse) or D (Drive).
- Never take the car out of gear and coast down a hill. This may be extremely hazardous. Always leave the car in gear when moving.
- Do not "ride" the brakes. This can cause them to overheat and malfunction. Instead, when you are driving down a long hill, slow down and shift to a lower gear. When you do this, engine braking will help slow the car.
- Slow down before shifting to a lower gear. Otherwise, the lower gear may not be engaged.
- Always use the parking brake. Do not depend on placing the transaxle in P (Park) to keep the car from moving.
- Exercise extreme caution when driving on a slippery surface. Be especially careful when braking, accelerating or shifting gears. On a slippery surface, an abrupt change in vehicle speed can cause the drive wheels to lose traction and the vehicle to go out of control.
- Optimum vehicle performance and economy is obtained by smoothly depressing and releasing the accelerator pedal.

⚠ WARNING

- **Always buckle-up! In a collision, an unbelted occupant is significantly more likely to be seriously injured or killed than a properly belted occupant.**
- **Avoid high speeds when cornering or turning.**
- **Do not make quick steering wheel movements, such as sharp lane changes or fast, sharp turns.**
- **The risk of rollover is greatly increased if you lose control of your vehicle at highway speeds.**
- **Loss of control often occurs if two or more wheels drop off the roadway and the driver oversteers to reenter the roadway.**
- **In the event your vehicle leaves the roadway, do not steer sharply. Instead, slow down before pulling back into the travel lanes.**
- **Never exceed posted speed limits.**

⚠ WARNING

If your vehicle becomes stuck in snow, mud, sand, etc., then you may attempt to rock the vehicle free by moving it forward and backward. Do not attempt this procedure if people or objects are anywhere near the vehicle. During the rocking operation the vehicle may suddenly move forward of backward as it becomes unstuck, causing injury or damage to nearby people or objects.

Moving up a steep grade from a standing start

To move up a steep grade from a standing start, depress the brake pedal, shift the shift lever to D (Drive). Select the appropriate gear depending on load weight and steepness of the grade, and release the parking brake. Depress the accelerator gradually while releasing the service brakes.

BRAKE SYSTEM

Power brakes

Your vehicle has power-assisted brakes that adjust automatically through normal usage.

In the event that the power-assisted brakes lose power because of a stalled engine or some other reason, you can still stop your vehicle by applying greater force to the brake pedal than you normally would. The stopping distance, however, will be longer.

When the engine is not running, the reserve brake power is partially depleted each time the brake pedal is applied. Do not pump the brake pedal when the power assist has been interrupted.

Pump the brake pedal only when necessary to maintain steering control on slippery surfaces.

⚠ WARNING - Brakes

- **Do not drive with your foot resting on the brake pedal. This will create abnormal high brake temperatures, excessive brake lining and pad wear, and increased stopping distances.**
- **When descending a long or steep hill, shift to a lower gear and avoid continuous application of the brakes. Continuous brake application will cause the brakes to overheat and could result in a temporary loss of braking performance.**
- **Wet brakes may impair the vehicle's ability to safely slow down; the vehicle may also pull to one side when the brakes are applied. Applying the brakes lightly will indicate whether they have been affected in this way. Always test your brakes in this fashion after driving through deep water. To dry the brakes, apply them lightly while maintaining a safe forward speed until brake performance returns to normal.**

(Continued)

(Continued)

- **Always, confirm the position of the brake and accelerator pedal before driving. If you don't check the position of the accelerator and brake pedal before driving, you may depress the accelerator instead of the brake pedal. It may cause a serious accident.**

In the event of brake failure

If service brakes fail to operate while the vehicle is in motion, you can make an emergency stop with the parking brake. The stopping distance, however, will be much greater than normal.

⚠ WARNING - Parking brake

Applying the parking brake while the vehicle is moving at normal speeds can cause a sudden loss of control of the vehicle. If you must use the parking brake to stop the vehicle, use great caution in applying the brake.

Disc brakes wear indicator

Your vehicle has disc brakes.

When your brake pads are worn and new pads are required, you will hear a high-pitched warning sound from your front brakes or rear brakes. You may hear this sound come and go or it may occur whenever you depress the brake pedal.

Please remember that some driving conditions or climates may cause a brake squeal when you first apply (or lightly apply) the brakes. This is normal and does not indicate a problem with your brakes.

⚠ CAUTION

- ***To avoid costly brake repairs, do not continue to drive with worn brake pads.***
- ***Always replace the front or rear brake pads as pairs.***

⚠ WARNING - Brake wear

This brake wear warning sound means your vehicle needs service. If you ignore this audible warning, you will eventually lose braking performance, which could lead to a serious accident.

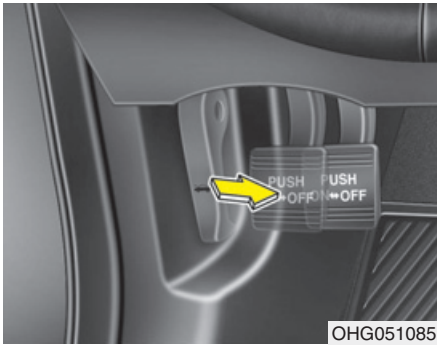

OHG051085

Foot parking brake

Applying the parking brake

To engage the parking brake, first apply the foot brake and then depress the parking brake pedal down as far as possible.

In addition it is recommended that when parking the vehicle on an incline, the shift lever should be in the P (Park) position on automatic transaxle vehicles.

⚠ CAUTION

- ***Driving with the parking brake applied will cause excessive brake pad and brake rotor wear.***
- ***Do not operate the parking brake while the vehicle is moving except in an emergency situation. It could damage the vehicle system and make endanger driving safety.***

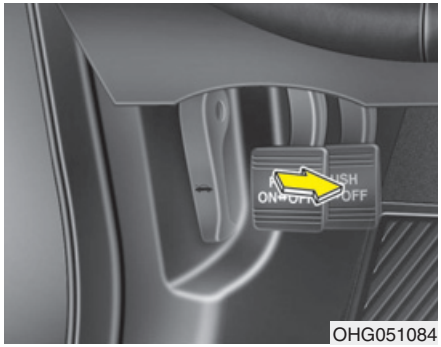

OHG051084

Releasing the parking brake

To release the parking brake, depress the parking brake pedal a second time while applying the foot brake. The pedal will automatically extend to the fully released position.

If the parking brake does not release or does not release all the way, have the system checked by an authorized HYUNDAI dealer.

⚠ WARNING

- **To prevent unintentional movement when stopped and leaving the vehicle, do not use the gearshift lever in place of the parking brake. Set the parking brake AND make sure the shift lever is securely positioned in P (Park).**
- **Never allow anyone who is unfamiliar with the vehicle to touch the parking brake. If the parking brake is released unintentionally, serious injury may occur.**
- **All vehicles should always have the parking brake fully engaged when parking to avoid inadvertent movement of the vehicle which can injure occupants or pedestrians.**

Check the brake warning light by turning the ignition switch ON (do not start the engine). This light will be illuminated when the parking brake is applied with the ignition switch in the START or ON position.

Before driving, be sure the parking brake is fully released and the brake warning light is off.

If the brake warning light remains on after the parking brake is released while engine is running, there may be a malfunction in the brake system. Immediate attention is necessary. If at all possible, cease driving the vehicle immediately. If that is not possible, use extreme caution while operating the vehicle and only continue to drive the vehicle until you can reach a safe location or repair shop.

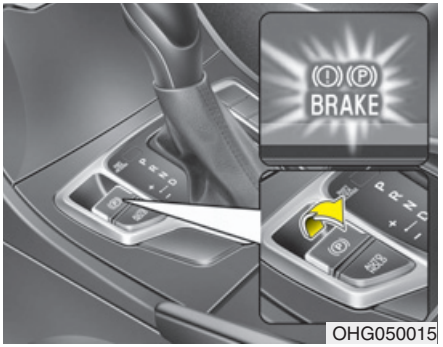

Electric parking brake (EPB) (if equipped)

Applying the parking brake

To apply the EPB (electric parking brake):

1. Depress the brake pedal.
2. Pull up the EPB switch.

Make sure the warning light comes on.

Also, the EPB is applied automatically if the Auto Hold button is on when the engine is turned off. However, if you press the EPB switch approximately within 3 seconds after the engine is turned off, the EPB will not be applied.

⚠ CAUTION

Do not operate the parking brake while the vehicle is moving except in an emergency situation. It could damage the vehicle system and endanger driving safety.

OHG050016

Releasing the parking brake

To release the EPB (electric parking brake), press the EPB switch in the following condition:

- Have the ignition switch or ENGINE START/STOP button in the ON position.
- Depress the brake pedal or accelerator pedal

Make sure the brake warning light goes off.

To release EPB (electric parking brake) automatically:

- Shift lever in P (Park)

  With the engine running depress the brake pedal and shift out of P (Park) to R (Rear), N (Neutral) or D (Drive).
- Shift lever in N (Neutral)

  With the engine running depress the brake pedal and shift out of N (Neutral) to R (Rear) or D (Drive).
- Depress the brake pedal satisfying the following conditions.
  1. Engine running
  2. Driver's seat belt fastened
  3. Driver's door, engine hood and trunk closed
  4. Shift lever in R (Rear), D (Drive) or Sports mode

Make sure the brake warning light goes off.

✻ NOTICE

- **For your safety, you can engage the EPB even though the ignition switch or ENGINE STOP/START button is in the OFF position, but you cannot release it.**
- **For your safety, depress the brake pedal and release the parking brake manually with the EPB switch when you drive downhill or when backing up the vehicle.**

⚠ CAUTION

- ***If the parking brake warning light is still on even though the EPB has been released, have the system checked by an authorized HYUNDAI dealer.***
- ***Do not drive your vehicle with the EPB applied. It may cause excessive brake pad and brake rotor wear.***

EPB (electric parking brake) may be automatically applied when:

- The EPB is overheated
- Requested by other systems
- The engine is turned off with the EPB applied

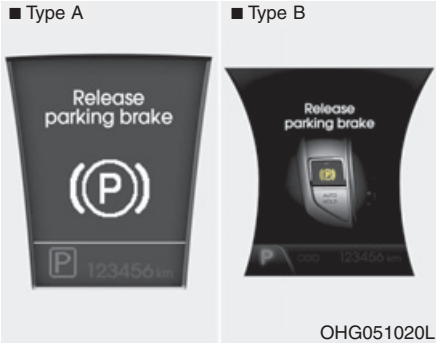

- If you try to drive off depressing the accelerator pedal with the EPB applied, but doesn't release automatically, a warning will sound and a message will appear.
- If the driver's seat belt is not fastened and the engine hood or trunk is opened, a warning will sound and a message will appear.
- If there is a problem with the vehicle, a warning may sound and a message may appear.

If the above situation occurs, depress the brake pedal and release EPB by pressing the EPB switch.

⚠ WARNING

- **To prevent unintentional movement when stopped and leaving the vehicle, do not use the shift lever in place of the parking brake. Set the parking brake and make sure the shift lever is securely positioned in P (Park).**
- **Never allow anyone who is unfamiliar with the vehicle to touch the parking brake. If the parking brake is released unintentionally, serious injury may occur.**
- **All vehicles should always have the parking brake fully engaged when parking to avoid inadvertent movement of the car which can injure occupants or pedestrians.**

⚠ CAUTION

- ***A click sound may be heard while operating or releasing the EPB, but these conditions are normal and indicate that the EPB is functioning properly.***
- ***When leaving your keys with a parking lot attendant or valet, make sure to inform him/her how to operate the EPB.***
- ***The EPB may malfunction if you drive with the EPB applied.***
- ***When you automatically release EPB by depressing the accelerator pedal, depress it slowly.***

■ Type A

■ Type B

OHG051018L

When the conversion from Auto Hold to EPB is not working properly a warning will sound and a message will appear.

⚠ CAUTION

Depress the brake pedal when the above message appears for the Auto Hold and EPB may not activate.

■ Type A

■ Type B

OHG051021L

If the EPB is applied while Auto Hold is activated because of ESP(electronic stability program) signal, a warning will sound and a message will appear.

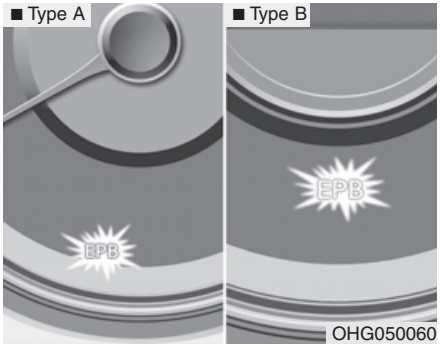

EPB malfunction indicator (if equipped)

This warning light illuminates if the engine start/stop button is turned to the ON position and goes off in approximately 3 seconds if the system is operation normally.

If the EPB malfunction indicator remains on, comes on while driving, or does not come on when the ignition switch or the engine start/stop button is turned to the ON position, this indicates that the EPB may have malfunctioned.

If this occurs, have your vehicle checked by an authorized HYUNDAI dealer as soon as possible.

The EPB malfunction indicator may illuminate when the ESP indicator comes on to indicate that the ESP is not working properly, but it does not indicate a malfunction of the EPB.

⚠ CAUTION

- ***The EPB warning light may illuminate if the EPB switch operates abnormally. Shut the engine off and turn it on again after a few minutes. The warning light will go off and the EPB switch will operate normally. However, if the EPB warning light is still on, have the system checked by an authorized HYUNDAI dealer.***
- ***If the parking brake warning light does not illuminate or blinks even though the EPB switch was pulled up, the EPB is not applied.***
- ***If the parking brake warning light blinks when the EPB warning light is on, press the switch, then pull it up. Once more press it back to its original position and pull it back up. If the EPB warning does not go off, have the system checked by an authorized HYUNDAI dealer.***

Emergency braking

If there is a problem with the brake pedal while driving, emergency braking is possible by pulling up and holding the EPB switch. Braking is possible only while you are holding the EPB switch.

⚠ WARNING

Do not operate the parking brake while the vehicle is moving except in an emergency situation.

✻ NOTICE

During emergency braking by the EPB, the parking brake warning light will illuminate to indicate that the system is operating.

⚠ CAUTION

If you continuously notice a noise or burning smell when the EPB is used for emergency braking, have your vehicle checked by an authorized HYUNDAI dealer.

When the EPB (electric parking brake) is not released

If the EPB does not release normally, take your vehicle to an authorized HYUNDAI dealer by loading the vehicle on a flatbed tow truck and have the system checked.

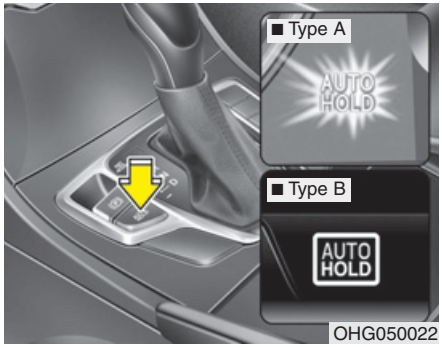

AUTO HOLD (if equipped)

The Auto Hold maintains the vehicle in a standstill even though the brake pedal is not depressed after the driver brings the vehicle to a complete stop by depressing the brake pedal.

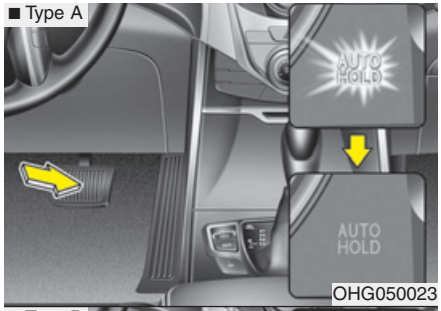

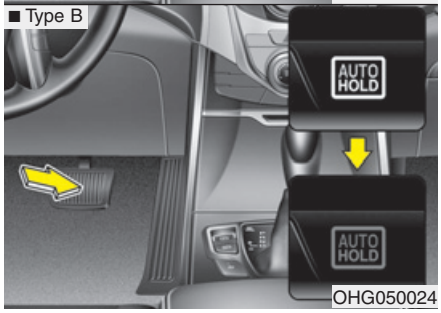

Set up

1. With the driver's door, engine hood and trunk closed, fasten the driver's seat belt or depress the brake pedal and then press the Auto Hold button. The white AUTO HOLD indicator will come on and the system will be in the standby position.

2. When you stop the vehicle completely by depressing the brake pedal, the AUTO HOLD indicator changes from white to green.
3. The vehicle will remain stationary even if you release the brake pedal.
4. If EPB is applied, Auto Hold will be released.

Leaving

If you press the accelerator pedal with the shift lever in R (Reverse), D (Drive) or sports mode, the Auto Hold will be released automatically and the vehicle will start to move. The indicator changes from green to white.

⚠ WARNING

When driving off from Auto Hold by depressing the accelerator pedal, always check the surrounding area near your vehicle.

Slowly depress the accelerator pedal for a smooth launch.

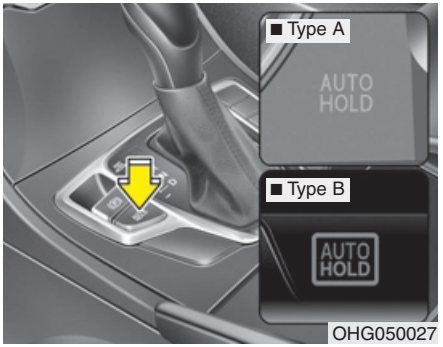

Cancel

To cancel the Auto Hold operation, press the Auto Hold switch while depressing the brake pedal. The AUTO HOLD indicator will go out.

If you want to release it manually, pull the EPB switch while depressing the brake pedal. The AUTO HOLD indicator changes from green to white and the system changes to the standby position.

For your safety, release the Auto Hold operation manually if the vehicle ahead is too close or during downhill driving.

✻ NOTICE

- **The Auto Hold does not operate when:**
  - **The driver's seat belt is unfastened and driver's door is opened**
  - **The engine hood is opened**
  - **The trunk is opened**
  - **The shift lever is in P (Park)**
  - **The EPB is applied**
- **For your safety, the Auto Hold automatically switches to EPB in such cases:**
  - **The driver's seat belt is unfastened and driver's door is opened**
  - **The engine hood is opened**
  - **The trunk is opened**
  - **The vehicle is in a standstill for more than 10 minutes**
  - **The vehicle is standing on a steep slope for a long period of time**
  - **The vehicle moved several times**

  In these cases, the brake warning light comes on, the AUTO HOLD indicator changes from green to white, and a warning sounds and a message will appear to inform you that EPB has been automatically engaged. Before driving off again, press foot brake pedal, check the surrounding area near your vehicle and release parking brake manually with the EPB switch.

(Continued)

(Continued)
- If the AUTO HOLD indicator lights up yellow, the Auto Hold is not working properly. Take your vehicle to an authorized HYUNDAI dealer and have the system checked.
- While operating Auto Hold, you may hear mechanical noise. However, it is normal operating noise.

⚠ WARNING
- **Press the accelerator pedal slowly when you start the vehicle.**
- **For your safety, cancel the Auto Hold when you drive downhill or back up the vehicle or park the vehicle.**

⚠ CAUTION
If there is a malfunction with the driver's door, hood or trunk open detection system, the Auto Hold may not work properly.
Take your vehicle to an authorized HYUNDAI dealer and have the system checked.

Anti-lock brake system (ABS) (if equipped)

⚠ WARNING
ABS (or ESP) will not prevent accidents due to improper or dangerous driving maneuvers. Even though vehicle control is improved during emergency braking, always maintain a safe distance between you and objects ahead. Vehicle speeds should always be reduced during extreme road conditions.
The braking distance for cars equipped with an anti-lock braking system (or Electronic Stability Program system) may be longer than for those without it in the following road conditions.
During these conditions the vehicle should be driven at reduced speeds:
- **Rough, gravel or snow-covered roads.**
- **With tire chains installed.**

(Continued)

(Continued)
- **On roads where the road surface is pitted or has different surface height.**

The safety features of an ABS (or ESP) equipped vehicle should not be tested by high speed driving or cornering. This could endanger the safety of yourself or others.

The ABS continuously senses the speed of the wheels. If the wheels are going to lock, the ABS system repeatedly modulates the hydraulic brake pressure to the wheels.

When you apply your brakes under conditions which may lock the wheels, you may hear a "tik-tik" sound from the brakes, or feel a corresponding sensation in the brake pedal. This is normal and it means your ABS is active.

In order to obtain the maximum benefit from your ABS in an emergency situation, do not attempt to modulate your brake pressure and do not try to pump your brakes. Press your brake pedal as hard as possible or as hard as the situation warrants and allow the ABS to control the force being delivered to the brakes.

✻ NOTICE

A click sound may be heard in the engine compartment when the vehicle begins to move after the engine is started. These conditions are normal and indicate that the anti-lock brake system is functioning properly.

- Even with the anti-lock brake system, your vehicle still requires sufficient stopping distance. Always maintain a safe distance from the vehicle in front of you.
- Always slow down when cornering. The anti-lock brake system cannot prevent accidents resulting from excessive speeds.
- On loose or uneven road surfaces, operation of the anti-lock brake system may result in a longer stopping distance than for vehicles equipped with a conventional brake system.

W-78

⚠ CAUTION

- ***If the ABS warning light is on and stays on, you may have a problem with the ABS. In this case, however, your regular brakes will work normally.***
- ***The ABS warning light will stay on for approximately 3 seconds after the ignition switch is ON. During that time, the ABS will go through self-diagnosis and the light will go off if everything is normal. If the light stays on, you may have a problem with your ABS. Contact an authorized HYUNDAI dealer as soon as possible.***

⚠ CAUTION

- ***When you drive on a road having poor traction, such as an icy road, and operate your brakes continuously, the ABS will be active continuously and the ABS warning light may illuminate. Pull your car over to a safe place and stop the engine.***
- ***Restart the engine. If the ABS warning light is off, then your ABS system is normal. Otherwise, you may have a problem with the ABS. Contact an authorized HYUNDAI dealer as soon as possible.***

✻ NOTICE

When you jump start your vehicle because of a drained battery, the engine may not run as smoothly and the ABS warning light may turn on at the same time. This happens because of the low battery voltage. It does not mean your ABS is malfunctioning.

- **Do not pump your brakes!**
- **Have the battery recharged before driving the vehicle.**

■ Type A

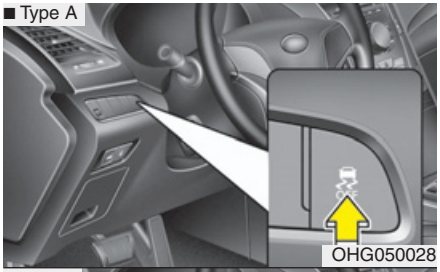

■ Type B

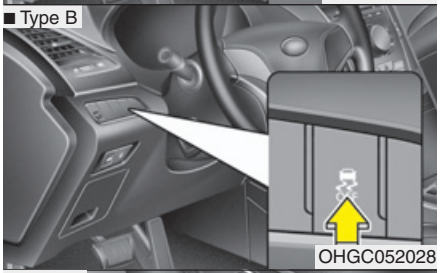

■ Type C

Electronic stability program (ESP) (if equipped)

The Electronic Stability Program (ESP) system is designed to stabilize the vehicle during cornering maneuvers. ESP checks where you are steering and where the vehicle is actually going.

ESP applies the brakes at individual wheels and intervenes in the engine management system to stabilize the vehicle.

⚠ WARNING

Never drive too fast for the road conditions or too quickly when cornering. Electronic stability program (ESP) will not prevent accidents. Excessive speed in turns, abrupt maneuvers and hydroplaning on wet surfaces can still result in serious accidents. Only a safe and attentive driver can prevent accidents by avoiding maneuvers that cause the vehicle to lose traction. Even with ESP installed, always follow all the normal precautions for driving - including driving at safe speeds for the conditions.

The Electronic Stability Program (ESP) system is an electronic system designed to help the driver maintain vehicle control under adverse conditions. It is not a substitute for safe driving practices. Factors including speed, road conditions and driver steering input can all affect whether ESP will be effective in preventing a loss of control. It is still your responsibility to drive and corner at reasonable speeds and to leave a sufficient margin of safety.

When you apply your brakes under conditions which may lock the wheels, you may hear a “tik-tik” sound from the brakes, or feel a corresponding sensation in the brake pedal. This is normal and it means your ESP is active.

✻ NOTICE

A click sound may be heard in the engine compartment when the vehicle begins to move after the engine is started. These conditions are normal and indicate that the Electronic Stability Program (ESP) System is functioning properly.

ESP operation

ESP ON condition

-

- When the ignition is turned ON, ESP and ESP OFF indicator lights illuminate for approximately 3 seconds, then ESP is turned on.
- Press the ESP OFF button after turning the ignition ON to turn ESP off. (ESP OFF indicator will illuminate). To turn the ESP on, press the ESP OFF button (ESP OFF indicator light will go off).
- When starting the engine, you may hear a slight ticking sound. This is the ESP performing an automatic system self-check and does not indicate a problem.

When operating

When the ESP is in operation, ESP indicator light blinks.

- When the Electronic Stability Program is operating properly, you can feel a slight pulsation in the vehicle. This is only the effect of brake control and indicates nothing unusual.
- When moving out of the mud or slippery road, the engine rpm (revolution per minute) may not be increased even if you press the accelerator pedal deeply. This is to maintain the stability and traction of the vehicle and does not indicate a problem.

ESP operation off

ESP OFF state

- To cancel ESP operation, press the ESP OFF button (ESP OFF indicator light illuminates).
- If the ignition switch is turned to LOCK position when ESP is off, ESP remains off. Upon restarting the engine, the ESP will automatically turn on again.

■ ESP indicator light

■ ESP OFF indicator light

Indicator light

When ignition switch is turned to ON, the indicator light illuminates, then goes off if the ESP system is operating normally.

The ESP indicator light blinks whenever ESP is operating or illuminates when ESP fails to operate.

ESP OFF indicator light comes on when the ESP is turned off with the button.

⚠ CAUTION

Driving with varying tire or wheel sizes may cause the ESP system to malfunction. When replacing tires, make sure they are the same size as your original tires.

⚠ WARNING

The Electronic Stability Program system is only a driving aid; use precautions for safe driving by slowing down on curved, snowy, or icy roads. Drive slowly and don't attempt to accelerate whenever the ESP indicator light is blinking, or when the road surface is slippery.

ESP OFF usage

When driving

- ESP should be turned on for daily driving whenever possible.
- To turn ESP off while driving, press the ESP OFF button while driving on a flat road surface.

Never press the ESP OFF button while ESP is operating (ESP indicator light blinks).

If ESP is turned off while ESP is operating, the vehicle may slip out of control.

✻ NOTICE

- **When operating the vehicle on a dynamometer, ensure that the ESP is turned off (ESP OFF light illuminated).**
- **Turning the ESP off does not affect ABS or brake system operation.**

⚠ WARNING

Never press the ESP OFF button while ESP is operating.

If the ESP is turned off while ESP is operating, the vehicle may go out of control.

To turn ESP off while driving, press the ESP OFF button while driving on a flat road surface.

Vehicle stability management (VSM) (if equipped)

This system provides further enhancements to vehicle stability and steering responses when a vehicle is driven on a slippery road or a vehicle detects changes in coefficient of friction between right wheels and left wheels when braking.

VSM operation

When the VSM is operating, the steering wheel may be controlled.

When the vehicle stability management is operating properly, you can feel a slight pulsation in the vehicle. This is only the effect of brake control and indicates nothing unusual.

The VSM does not operate when:

- Driving on bank road such as gradient or incline
- Driving rearward
- ESP OFF indicator light ( ) remains illuminated on the instrument cluster
- EPS (Electric Power Steering) indicator light remains illuminated on the instrument cluster

VSM operation off

If you press the ESP OFF button to turn off the ESP, the VSM will also cancel and the ESP OFF indicator light ( ) illuminates.

To turn on the VSM, press the button again. The ESP OFF indicator light goes out.

Malfunction indicator

The VSM can be deactivated even if you don't cancel the VSM operation by pressing the ESP OFF button. It indicates that a malfunction has been detected somewhere in the EPS (Electric Power Steering) system or VSM system. If the ESP indicator light ( ) or EPS warning light remains on, take your vehicle to an authorized HYUNDAI dealer and have the system checked.

✻ NOTICE

- **The VSM is designed to function above approximately 15 km/h (9 mph) on curves.**
- **The VSM is designed to function above approximately 30 km/h (18 mph) when a vehicle is braking on a split-mu road. The split-mu road is made of surfaces which have different friction forces.**

⚠ WARNING

- **The Vehicle Stability Management system is not a substitute for safe driving practices but a supplementary function only. It is the responsibility of the driver to always check the speed and the distance to the vehicle ahead. Always hold the steering wheel firmly while driving.**
- **Your vehicle is designed to activate according to the driver's intention, even with the VSM installed. Always follow all the normal precautions for driving at safe speeds for the conditions – including driving in inclement weather and on a slippery road.**
- **Driving with varying tire or wheel sizes may cause the VSM system to malfunction. When replacing tires, make sure they are the same size as your original tires.**

Hill-start assist control (HAC) (if equipped)

A vehicle has the tendency to slip back on a steep hill when it starts to go after stopping. The Hill-start Assist Control (HAC) prevents the vehicle from slipping back by operating the brakes automatically for about 2 seconds. The brakes are released when the accelerator pedal is depressed or after about 2 seconds.

⚠ WARNING

The HAC is activated only for about 2 seconds, so when the vehicle is starting off always depress the accelerator pedal.

✻ NOTICE

- **The HAC does not operate when the transaxle shift lever is in the P (Park) or N (Neutral) position.**
- **The HAC activates even though the ESP is off but it does not activate when the ESP has malfunctioned.**

Good braking practices

⚠ WARNING

- **Whenever you leave or park your vehicle, always set the parking brake as far as possible and fully engage the vehicle's transaxle into the P (Park) position. If the parking brake is not fully engaged, the vehicle may move inadvertently and injure yourself and others.**
- **All vehicles should always have the parking brake fully engaged when parking to avoid inadvertent movement of the car which can injure occupants or pedestrians.**

- Check to be sure the parking brake is not engaged and that the parking brake indicator light is out before driving away.
- Driving through water may get the brakes wet. They can also get wet when the car is washed. Wet brakes can be dangerous! Your car will not stop as quickly if the brakes are wet. Wet brakes may cause the car to pull to one side.

  To dry the brakes, apply the brakes lightly until the braking action returns to normal, taking care to keep the car under control at all times. If the braking action does not return to normal, stop as soon as it is safe to do so and call an authorized HYUNDAI dealer for assistance.
- Do not coast down hills with the car out of gear. This is extremely hazardous. Keep the car in gear at all times, use the brakes to slow down, then shift to a lower gear so that engine braking will help you maintain a safe speed.
- Do not "ride" the brake pedal. Resting your foot on the brake pedal while driving can be dangerous because the brakes might overheat and lose their effectiveness. It also increases the wear of the brake components.
- If a tire goes flat while you are driving, apply the brakes gently and keep the car pointed straight ahead while you slow down. When you are moving slowly enough for it to be safe to do so, pull off the road and stop in a safe place.
- If your car is equipped with an automatic transaxle, don't let your car creep forward. To avoid creeping forward, keep your foot firmly on the brake pedal when the car is stopped.
- Be cautious when parking on a hill. Firmly engage the parking brake and place the shift lever in P (Park). If your car is facing downhill, turn the front wheels into the curb to help keep the car from rolling. If your car is facing uphill, turn the front wheels away from the curb to help keep the car from rolling. If there is no curb or if it is required by other conditions to keep the car from rolling, block the wheels.
- Under some conditions your parking brake can freeze in the engaged position. This is most likely to happen when there is an accumulation of snow or ice around or near the rear brakes or if the brakes are wet. If there is a risk that the parking brake may freeze, apply it only temporarily while you put the shift lever in P (Park) and block the rear wheels so the car cannot roll. Then release the parking brake.
- Do not hold the vehicle on the upgrade with the accelerator pedal. This can cause the transaxle to overheat. Always use the brake pedal or parking brake.

CRUISE CONTROL SYSTEM (IF EQUIPPED)

■ Type A

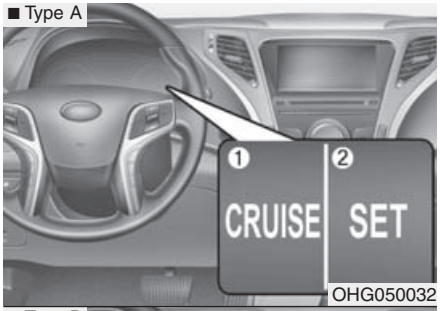

OHG050032

■ Type B

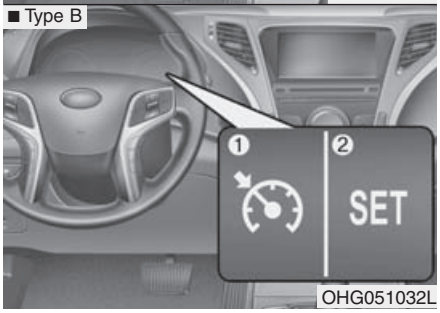

OHG051032L

① Cruise indicator
② SET indicator

The cruise control system allows you to program the vehicle to maintain a constant speed without pressing the accelerator pedal.
This system is designed to function above approximately 40 km/h (25 mph).

⚠ WARNING

- **If the cruise control is left on, (cruise indicator light in the instrument cluster illuminated) the cruise control can be activated unintentionally. Keep the cruise control system off (cruise indicator light OFF) when the cruise control is not in use, to avoid inadvertently setting a speed.**
- **Use the cruise control system only when traveling on open highways in good weather.**
- **Do not use the cruise control when it may not be safe to keep the car at a constant speed, for instance, driving in heavy or varying traffic, or on slippery (rainy, icy or snow-covered) or winding roads or over 6% up-hill or down-hill roads.**
- **Pay particular attention to the driving conditions whenever using the cruise control system.**
- **Be careful when driving downhill using the cruise control system, which may increase vehicle speed.**

✻ NOTICE

- **During normal cruise control operation, when the SET switch is activated or reactivated after applying the brakes, the cruise control will energize after approximately 3 seconds. This delay is normal.**
- **To activate cruise control, depress the brake pedal at least once after turning the ignition switch to the ON position or starting the engine. This is to check if the brake switch which is important part to cancel cruise control is in normal condition.**

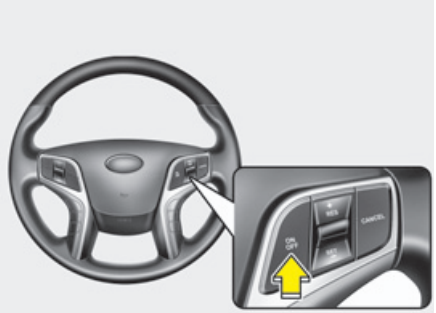

OHG050033

To set cruise control speed:

1. Push the cruise ON-OFF button on the steering wheel to turn the system on. The CRUISE indicator light in the instrument cluster will illuminate.
2. Accelerate to the desired speed, which must be more than 40 km/h (25 mph).

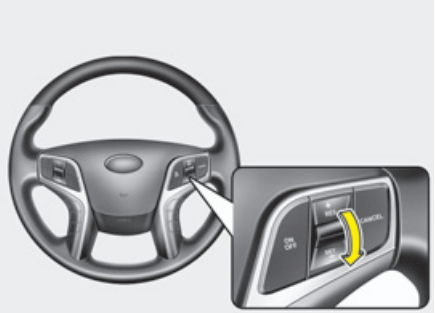

OHG050035

3. Push the SET- switch, and release it at the desired speed. The SET indicator light in the instrument cluster will illuminate. Release the accelerator pedal. The desired speed will automatically be maintained.

On a steep grade, the vehicle may slow down or speed up slightly while going uphill or downhill.

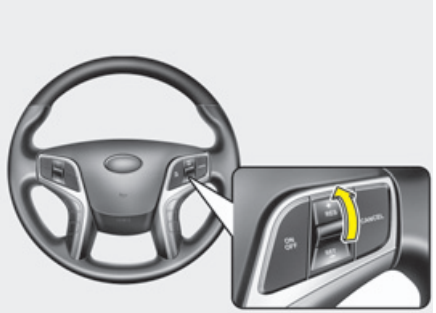

OHG050034

To increase cruise control set speed:

Follow either of these procedures:

- Push the RES+ switch and hold it. Your vehicle will accelerate. Release the switch at the speed you want.
- Push the RES+ switch and release it immediately. The cruising speed will increase by 1.0 km/h each time the RES+ switch is operated in this manner.

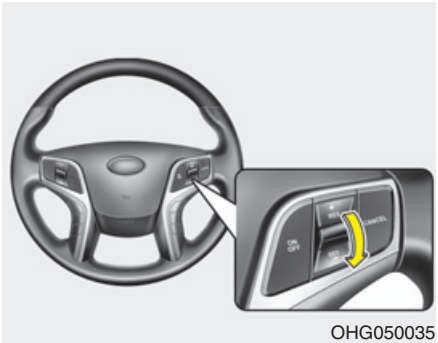

OHG050035

To decrease cruise control set speed:

Follow either of these procedures:

- Push the SET- switch and hold it. Your vehicle will gradually slow down. Release the switch at the speed you want to maintain.
- Push the SET- switch and release it immediately. The cruising speed will decrease by 1.0 km/h each time the SET- switch is operated in this manner.

To temporarily accelerate with the cruise control on:

If you want to speed up temporarily when the cruise control is on, depress the accelerator pedal. Increased speed will not interfere with cruise control operation or change the set speed.

To return to the set speed, take your foot off the accelerator.

If you press the SET- switch at increased speed, the cruising speed will be set again.

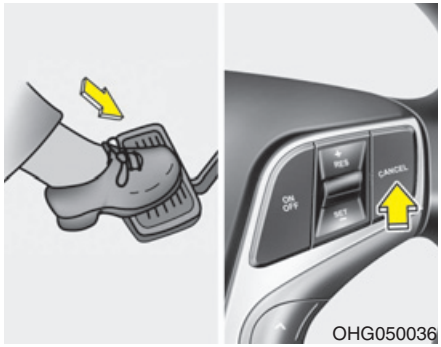

OHG050036

To cancel cruise control, do one of the following:

- Press the brake pedal.
- Shift into N (Neutral) with an automatic transaxle.
- Press the CANCEL switch located on the steering wheel.
- Decrease the vehicle speed lower than the memory speed by 15 km/h (9 mph).
- Decrease the vehicle speed to less than approximately 40 km/h (25 mph).

Each of these actions will cancel cruise control operation (the SET indicator light in the instrument cluster will go off), but it will not turn the system off. If you wish to resume cruise control operation, push the RES+ switch located on your steering wheel. You will return to your previously preset speed.

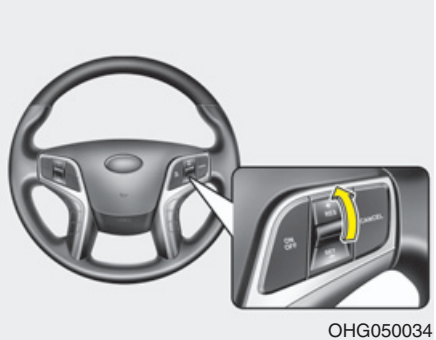

OHG050034

To resume cruising speed at more than approximately 40 km/h (25 mph):

If any method other than the cruise ON/OFF switch was used to cancel cruising speed and the system is still activated, the most recent set speed will automatically resume when the RES+ switch is pushed.

It will not resume, however, if the vehicle speed has dropped below approximately 40 km/h(25 mph).

✻ NOTICE

Always check the road conditions when pressing the RES+ switch to resume the speed.

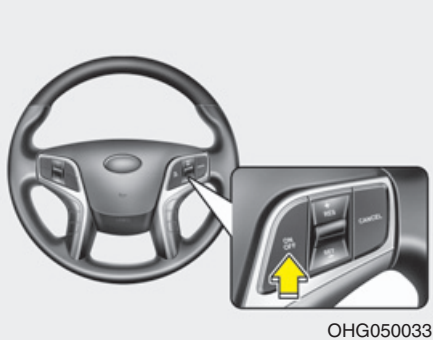

OHG050033

To turn cruise control off, do one of the following:

- Push the cruise ON/OFF button (the CRUISE indicator light in the instrument cluster will go off).
- Turn the ignition off.

Both of these actions cancel cruise control operation. If you want to resume cruise control operation, repeat the steps provided in “To set cruise control speed” on the previous page.

SMART CRUISE CONTROL SYSTEM (IF EQUIPPED)

■ Type A

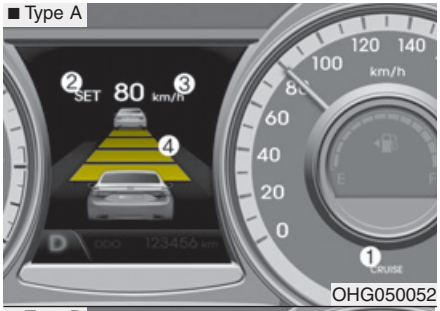

OHG050052

■ Type B

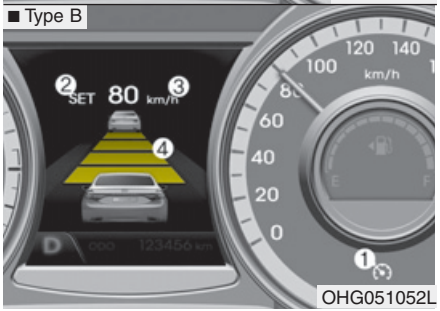

OHG051052L

① Cruise indicator
② SET indicator
③ Set speed
④ Vehicle-to-vehicle distance

The smart cruise control system allows you to program the vehicle to maintain constant speed and distance detecting the vehicle ahead without depressing the accelerator pedal.

⚠ WARNING

For your safety, please read the owner's manual before using the smart cruise control system.

⚠ WARNING

- **If the smart cruise control is left on, (cruise indicator light in the instrument cluster illuminated) the smart cruise control can be activated unintentionally. Keep the smart cruise control system off (cruise indicator light off) when the smart cruise control is not used.**
- **Use the smart cruise control system only when traveling on open highways in good weather.**
- **Do not use the smart cruise control when it may not be safe to keep the car at a constant speed. For instance, driving in heavy or varying traffic, or on slippery (rainy, icy or snow-covered) or winding roads or steep hills.**
- **Pay particular attention to the driving conditions whenever using the smart cruise control system.**
- **The smart cruise control system is not a substitute for safe driving. It is the responsibility of the driver to always check the speed and distance of the vehicle ahead.**

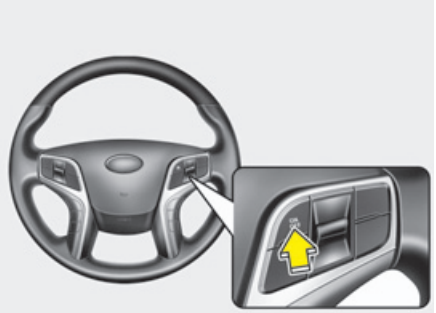
OHG052053K

Smart cruise control speed

To set cruise control speed:

1. Push the cruise ON-OFF button on the steering wheel to turn the system on. The CRUISE indicator light in the instrument cluster will illuminate.
2. Accelerate to the desired speed.

   The smart cruise control speed can be set as follows:

   - 30 km/h (18.6 mph) ~ 180 km/h (113 mph): when there is no vehicle in front
   - 0 km/h (0 mph) ~ 180 km/h (113 mph): when there is a vehicle in front

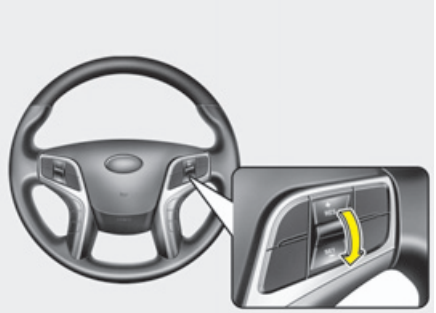
OHG052054K

3. Push the SET- switch, and release it at the desired speed. The SET indicator light, set speed and vehicle to vehicle distance on the LCD screen will illuminate.
4. Release the accelerator pedal. The desired speed will automatically be maintained.

If there is a vehicle in front of you, the speed may decrease to maintain the distance to the vehicle ahead.

On a steep grade, the vehicle may slow down or speed up slightly while going uphill or downhill.

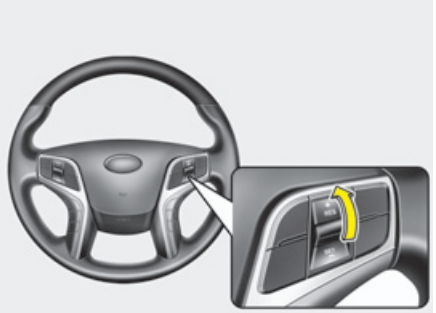
OHG052055K

To increase cruise control set speed:

Follow either of these procedures:

- Push the RES+ switch and hold it. Your vehicle set speed will increase by 10 km/h. Release the switch at the speed you want.
- Push the RES+ switch and release it immediately. The cruising speed will increase by 1.0 km/h each time the RES+ switch is operated in this manner.
- You can set the speed to 180 km/h (113 mph).

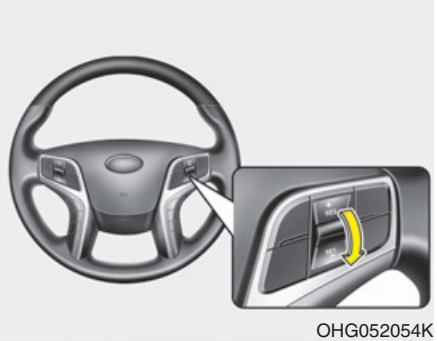
OHG052054K

To decrease the crusie control set speed:

Follow either of these procedures:

- Push the SET- switch and hold it. Your vehicle set speed will decrease by 10 km/h. Release the switch at the speed you want.
- Push the SET- switch and release it immediately. The cruising speed will decrease by 1.0 km/h each time the SET- switch is operated in this manner.
- You can set the speed to 30 km/h (18.6 mph).

To temporarily accelerate with the cruise control on:

If you want to speed up temporarily when the cruise control is on, depress the accelerator pedal. Increased speed will not interfere with cruise control operation or change the set speed.

To return to the set speed, take your foot off the accelerator.

If you press the SET- switch the increased cruising speed will return to it's set speed.

✻ NOTICE

Be careful when accelerating temporarily, because the speed is not controlled automatically at this time even if there is a vehicle in front of you.

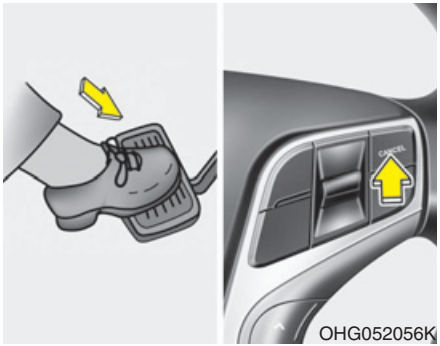

OHG052056K

Smart Cruise control will be temporarily canceled when:

Cancelled manually

- The brake pedal is depressed.
- The shift lever is shifted to N (Neutral), R (Reverse) or D (Drive).

Cancelled automatically

- The driver's door is opened.
- The EPB (electronic parking brake) is applied.
- The vehicle speed is over 180km/h (113mph)
- The vehicle stops on a steep incline.
- The ESP or ABS is operating.
- The ESP is turned off.
- The sensor or the cover is dirty or blocked with foreign matter.
- The vehicle stops and go repeatedly for a long period of time.
- The driver starts driving by depressing the accelerator pedal or pushing the RES+ switch if a vehicle stops far away ahead of the your vehicle.
- The accelerator pedal is continuously depressed for more than 1 minute.

Each of these actions will cancel the smart cruise control operation. (The SET indicator, set speed and vehicle to vehicle distance on the LCD display will go off.)

In a condition the smart cruise control is cancelled automatically, the smart cruise control will not resume even though the RES+ or SET- switch is pushed. Also, the EPB (electronic parking brake) will be applied.

⚠ CAUTION

If the smart cruise control is cancelled by other than the reasons mentioned, have the system checked by an authorized HYUNDAI dealer.

OHG051080L

If the system is cancelled, the warning chime will sound and a message will appear for a few seconds. You must adjust the vehicle speed, as well as the distance to the vehicle ahead by depressing the accelerator or brake pedal.

Always check the road conditions. Do not rely on the warning chime.

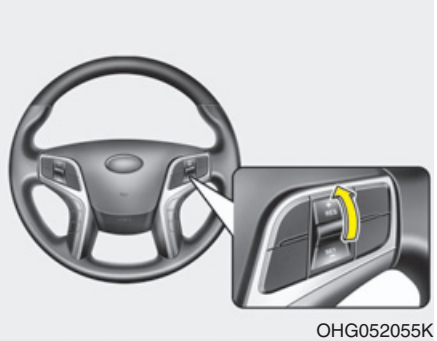
OHG052055K

To resume cruise control set speed:

If any method other than the cruise ON/OFF switch was used to cancel cruising speed and the system is still activated, the cruising speed will automatically resume when the SET- or RES+ switch is pushed.

If the RES+ switch is pushed, the speed will resume to the recently set speed. It will not resume if the vehicle speed has dropped below approximately 30km/h (18.6mph).

✻ NOTICE

Always check the road conditions when pressing the RES+ switch to resume speed.

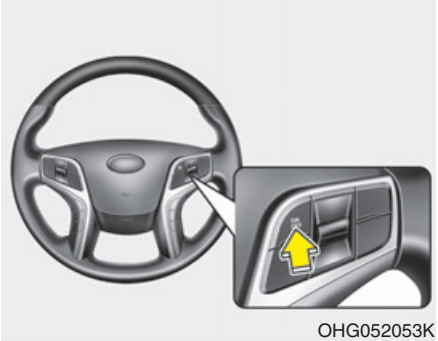
OHG052053K

To turn cruise control off:

Push the cruise ON/OFF button (the CRUISE indicator light in the instrument cluster will go off).

■ Type A

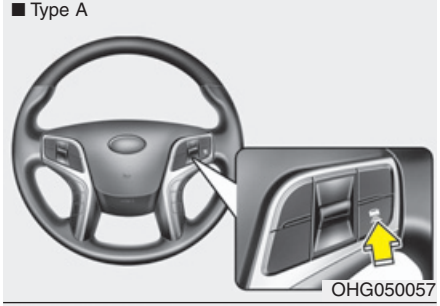
OHG050057

■ Type B

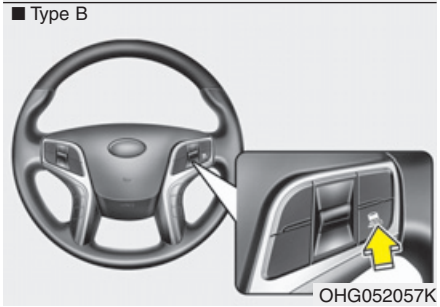
OHG052057K

Smart cruise control vehicle to vehicle distance

To set vehicle to vehicle distance:

This function allows you to program the vehicle to maintain relative distance to the vehicle ahead without depressing the accelerator pedal or brake pedal.

The vehicle to vehicle distance will automatically activate when the smart cruise control system is on.
Select the appropriate distance according to road conditions and vehicle speed.

Each time the button is pressed, the vehicle to vehicle distance changes as follows:

Distance 4 → Distance 3 → Distance 2 → Distance 1 → Distance 4

For example, if you drive at 90 km/h (56 mph), the distance maintain as follows;

Distance 4 - approximately 52 m
Distance 3 - approximately 40 m
Distance 2 - approximately 30 m
Distance 1 - approximately 25 m

✻ NOTICE

The 'Distance 4' is always set when the system is used for the first time after starting the engine.

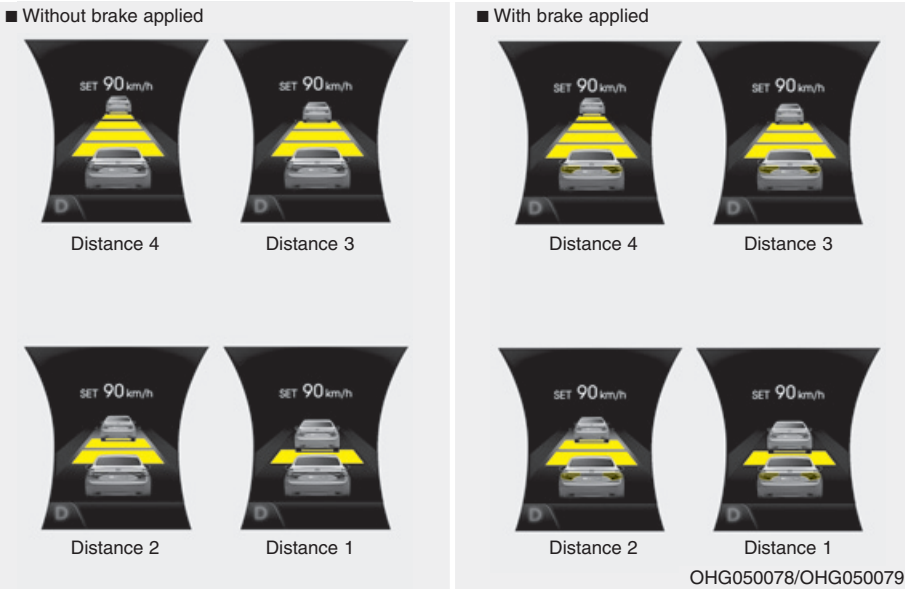

- The vehicle will maintain the set speed, when the lane ahead is clear.
- The vehicle will slow down or speed up to maintain the selected distance, when there is a vehicle ahead of you in the lane. (A vehicle will appear in front of your vehicle in the LCD display only when there is an actual vehicle in front of you)
- If the vehicle ahead speeds up, your vehicle will travel at a steady cruising speed after accelerating to the selected speed.

⚠ CAUTION

- ***The warning chime sounds and malfunction indicator blinks if it is hard to maintain the selected distance to the vehicle ahead.***
- ***If the warning chime sounds, actively adjust the vehicle speed, as well as the distance to the vehicle ahead by depressing the accelerator or brake pedal.***
- ***Even if the warning chime is not activated, always pay attention to the driving conditions to prevent dangerous situations from occurring.***

OHG051071L

⚠ CAUTION

If the vehicle ahead (vehicle speed: less than 30 km/h (18.6 mph)) disappears to the next lane, the warning chime will sound and a message will appear. Adjust your vehicle speed for vehicles or objects that can suddenly appear in front of you.

OHG051073L

In traffic situation

In traffic, your vehicle will stop if the vehicle ahead of you stops. Also, if the vehicle ahead of you starts moving, your vehicle will start as well. However, if the vehicle stops for more than 3 seconds, you must depress the accelerator pedal or push the RES+ switch to start driving.

OHG050059

Distance to distance vehicle sensor

The sensor detects the distance to the vehicle ahead.

If the sensor is covered with dirt or other foreign matter, the vehicle to vehicle distance control may not operate correctly.

Always keep the area in front of the sensor clean.

Sensor malfunction indicator

If the sensor or cover is dirty or obscured with foreign matter such as snow, the indicator will illuminate. Clean the sensor by using a soft cloth.

SCC (Smart cruise control) malfunction indicator

The warning light illuminates when the vehicle to vehicle distance control system is not functioning normally.

Take your vehicle to an authorized HYUNDAI dealer and have the system checked.

⚠ CAUTION

- ***Do not install accessories around the sensor and do not replace the bumper by yourself. It may interfere with the sensor performance.***
- ***Always keep the sensor and bumper clean.***
- ***To prevent sensor cover damage from occurring, wash the car with a soft cloth.***
- ***Do not damage the sensor or sensor area by a strong impact. If the sensor moves slightly off position, the smart cruise control system will not operate correctly.***

  If this occurs, have your vehicle checked by an authorized HYUNDAI dealer as soon as possible.
- ***Use only a genuine HYUNDAI sensor cover for your vehicle.***

To convert to cruise control mode:

The driver may choose to only use the cruise control mode (speed control function) by doing as follows:

1. Turn the smart cruise control system on (the cruise indicator light will be on but the system will not be activated).
2. Push the distance to distance switch for more than 2 seconds.
3. Choose between "Smart cruise control(SCC) mode" and "Cruise control(CC) mode".

⚠ WARNING

When using the cruise control mode, you must manually access the distance to other vehicles as the system will not automatically brake to slow down for other vehicles.

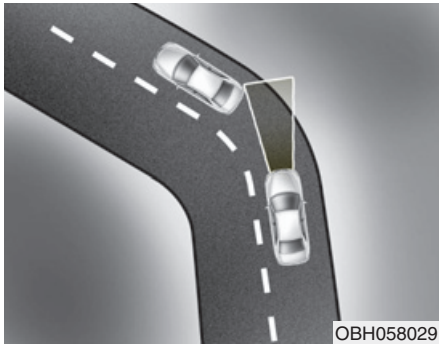
OBH058029

Limitations of the system

The smart cruise control system may have limits to its ability to detect distance to the vehicle ahead due to road and traffic conditions.

On curves

- On curves, the smart cruise control system may not detect a moving vehicle in your lane, and then your vehicle could accelerate to the set speed. Also, the vehicle speed will slow down when the vehicle ahead is recognized suddenly.
- Select the appropriate set speed on curves and apply the brakes or accelerator pedal if necessary.

OBH058030

- Your vehicle speed can be reduced due to a vehicle in the adjacent lane. Apply the accelerator pedal and select the appropriate set speed. Check to be sure that the road conditions permit safe operation of the smart cruise control.

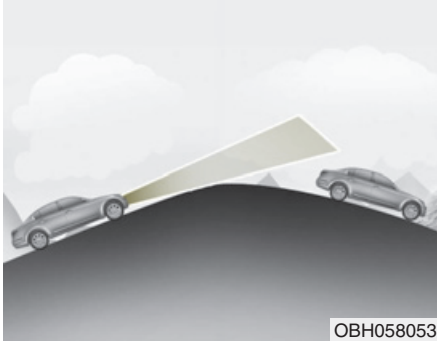
OBH058053

On inclines

- During uphill or downhill driving, the smart cruise control system may not detect a moving vehicle in your lane, and cause your vehicle to accelerate to the set speed. Also, the vehicle speed will slow down when the vehicle ahead is recognized suddenly.
- Select the appropriate set speed on inclines and apply the brakes or accelerator pedal if necessary.

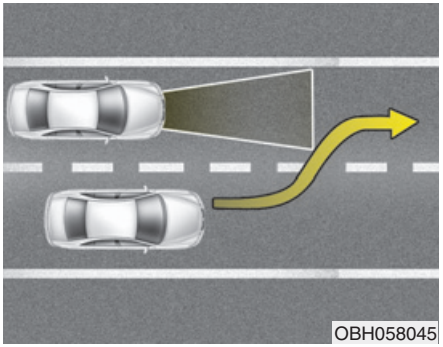
OBH058045

Lane changing

- A vehicle which moves into your lane from an adjacent lane cannot be recognized by the sensor until it is in the sensor's detection range.
- The sensor may not detect immediately when a vehicle cuts in suddenly. Always pay attention to the traffic, road and driving conditions.
- If a vehicle which moves into your lane is slower than your vehicle, your speed may decrease to maintain the distance to the vehicle ahead.
- If a vehicle which moves into your lane is faster than your vehicle, your vehicle will accelerate to the selected speed.

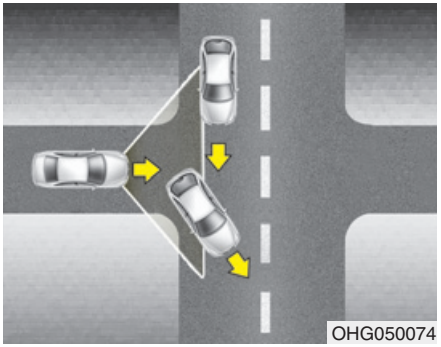
OHG050074

- Your vehicle may accelerate when a vehicle ahead of you disappears.
- When you are warned that the vehicle ahead of you is not detected, drive with caution.

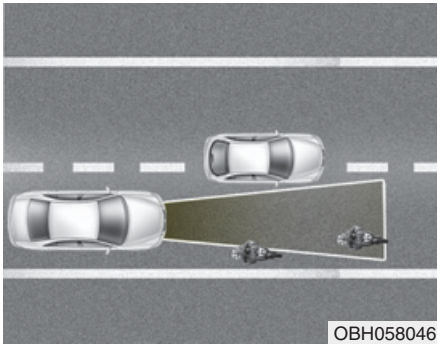
OBH058046

Vehicle recognition

Some vehicles ahead in your lane cannot be recognized by the sensor as follows:

- Narrow vehicles such as motorcycles or bicycles
- Vehicles offset to one side
- Slow-moving vehicles or sudden-decelerating vehicles
- Stopped vehicles
- Vehicles with small rear profile such as trailers with no loads

A vehicle ahead cannot be recognized correctly by the sensor if any of following occurs:

- When the vehicle is pointing upwards due to overloading in the trunk
- While making turns by steering
- When driving to one side of the lane
- When driving on narrow lanes or on curves

Apply the brakes or accelerator pedal if necessary.

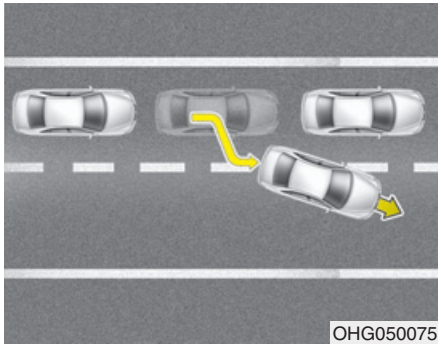
OHG050075

- When vehicles are at a standstill and the vehicle in front of you changes to the next lane, be careful when your vehicle starts to move because it may not recognize the stopped vehicle in front of you.

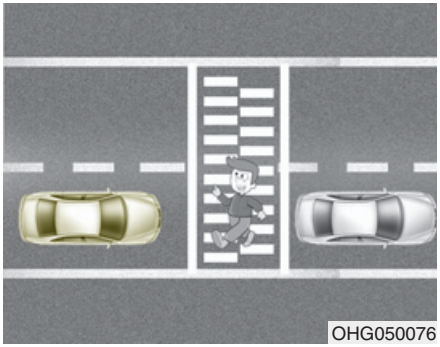

- Always look out for pedestrians when your vehicle is maintaining a distance with the vehicle ahead.

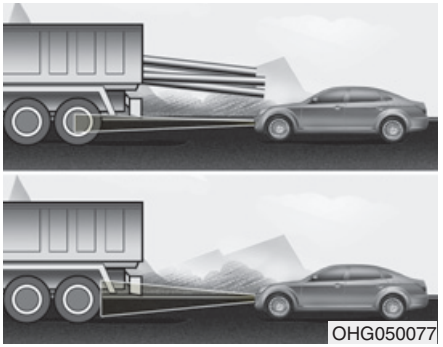

- Always be cautious for vehicles with higher height or vehicles carrying loads that sticks out to the back of the vehicle.

⚠ WARNING

- **The smart cruise control system cannot guarantee the stop for every emergency situation.**
  If an emergency stop is necessary, you must apply the brakes.
- **Keep a safe distance according to road conditions and vehicle speed. If the vehicle to vehicle distance is too close during a high-speed driving, a serious collision may result.**
- **The smart cruise control system cannot recognize a stopped vehicle, pedestrians or an oncoming vehicle. Always look ahead cautiously to prevent unexpected and sudden situations from occurring.**
- **When other vehicles are changing lanes in front of you frequently, the smart cruise control system may not operate appropriately. Always look ahead cautiously to prevent unexpected and sudden situations from occurring.**

(Continued)

(Continued)

- **The smart cruise control system is not a substitute for safe driving practices but a convenience function only. It is the responsibility of the driver to always check the speed and the distance to the vehicle ahead.**
- **Always be aware of the selected speed and vehicle to vehicle distance.**
- **Always maintain sufficient braking distance and decelerate your vehicle by applying the brakes if necessary.**
- **As the smart cruise control system may not recognize complex driving situations, always pay attention to driving conditions and control your vehicle speed.**
- **For safe operation, carefully read and follow the instructions in this manual before use.**

⚠ CAUTION

The smart cruise control system may not operate temporarily due to electrical interference.

ECONOMICAL OPERATION

Your vehicle's fuel economy depends mainly on your style of driving, where you drive and when you drive.

Each of these factors affects how many kilometers (miles) you can get from a liter (gallon) of fuel. To operate your vehicle as economically as possible, use the following driving suggestions to help save money in both fuel and repairs:

- Drive smoothly. Accelerate at a moderate rate. Don't make "jack-rabbit" starts or full-throttle shifts and maintain a steady cruising speed. Don't race between stoplights. Try to adjust your speed to that of the other traffic so you don't have to change speeds unnecessarily. Avoid heavy traffic whenever possible. Always maintain a safe distance from other vehicles so you can avoid unnecessary braking. This also reduces brake wear.
- Drive at a moderate speed. The faster you drive, the more fuel your car uses. Driving at a moderate speed, especially on the highway, is one of the most effective ways to reduce fuel consumption.
- Do not "ride" the brake pedal. This can increase fuel consumption and also increase wear on these components. In addition, driving with your foot resting on the brake pedal may cause the brakes to overheat, which reduces their effectiveness and may lead to more serious consequences.
- Take care of your tires. Keep them inflated to the recommended pressure. Incorrect inflation, either too much or too little, results in unnecessary tire wear. Check the tire pressures at least once a month.
- Be sure that the wheels are aligned correctly. Improper alignment can result from hitting curbs or driving too fast over irregular surfaces. Poor alignment causes faster tire wear and may also result in other problems as well as greater fuel consumption.
- Keep your car in good condition. For better fuel economy and reduced maintenance costs, maintain your car in accordance with the maintenance schedule in section 7. If you drive your car in severe conditions, more frequent maintenance is required (see section 7 for details).
- Keep your car clean. For maximum service, your vehicle should be kept clean and free of corrosive materials. It is especially important that mud, dirt, ice, etc. not be allowed to accumulate on the underside of the car. This extra weight can result in increased fuel consumption and also contribute to corrosion.
- Travel lightly. Do not carry unnecessary weight in your car. Weight reduces fuel economy.
- Do not let the engine idle longer than necessary. If you are waiting (and not in traffic), turn off your engine and restart only when you're ready to go.

- Remember, your vehicle does not require extended warm-up. After the engine has started, allow the engine to run for 10 to 20 seconds prior to placing the vehicle in gear. In very cold weather, however, give your engine a slightly longer warm-up period.
- Do not "lug" or "over-rev" the engine. Lugging is driving very slowly in too high a gear resulting in engine bucking. If this happens, shift to a lower gear. Over-revving is racing the engine beyond its safe limit. This can be avoided by shifting at the recommended speeds.
- Use your air conditioning sparingly. The air conditioning system is operated by engine power so your fuel economy is reduced when you use it.
- Open windows at high speeds can reduce fuel economy.
- Fuel economy is less in crosswinds and headwinds. To help offset some of this loss, slow down when driving in these conditions.

Keeping a vehicle in good operating condition is important both for economy and safety. Therefore, have an authorized HYUNDAI dealer perform scheduled inspections and maintenance.

⚠ WARNING - Engine off during motion

Never turn the engine off to coast down hills or anytime the vehicle is in motion. The power steering and power brakes will not function properly without the engine running. Instead, keep the engine on and downshift to an appropriate gear for engine braking effect. In addition, turning off the ignition while driving could engage the steering wheel lock resulting in loss of vehicle steering which could cause serious injury or death.

SPECIAL DRIVING CONDITIONS

1JBB3302

Hazardous driving conditions

When hazardous driving conditions are encountered such as water, snow, ice, mud, sand, or similar hazards, follow these suggestions:

- Drive cautiously and allow extra distance for braking.
- Avoid sudden movements in braking or steering.
- When braking with non-ABS brakes pump the brake pedal with a light up-and-down motion until the vehicle is stopped.

⚠ WARNING - ABS

Do not pump the brake pedal on a vehicle equipped with ABS.

- If stalled in snow, mud, or sand, use second gear. Accelerate slowly to avoid spinning the drive wheels.
- Use sand, rock salt, tire chains, or other non-slip material under the drive wheels to provide traction when stalled in ice, snow, or mud.

⚠ WARNING - Downshifting

Downshifting with an automatic transaxle, while driving on slippery surfaces can cause an accident. The sudden change in tire speed could cause the tires to skid. Be careful when downshifting on slippery surfaces.

Rocking the vehicle

If it is necessary to rock the vehicle to free it from snow, sand, or mud, first turn the steering wheel right and left to clear the area around your front wheels. Then, shift back and forth between R (Reverse) and any forward gear in vehicles equipped with an automatic transaxle. Do not race the engine, and spin the wheels as little as possible. If you are still stuck after a few tries, have the vehicle pulled out by a tow vehicle to avoid engine overheating and possible damage to the transaxle.

⚠ CAUTION

Prolonged rocking may cause engine over-heating, transaxle damage or failure, and tire damage.

⚠ WARNING - Spinning tires

Do not spin the wheels, especially at speeds more than 56 km/h (35 mph). Spinning the wheels at high speeds when the vehicle is stationary could cause a tire to overheat which could result in tire damage that may injure bystanders.

✻ NOTICE

Vehicle equipped with the ESP system should turn off the system prior to rocking the vehicle.

⚠ WARNING

If your vehicle becomes stuck in snow, mud, sand, etc., then you may attempt to rock the vehicle free by moving it forward and backward. Do not attempt this procedure if people or objects are anywhere near the vehicle. During the rocking operation the vehicle may suddenly move forward of backward as it becomes unstuck, causing injury or damage to nearby people or objects.

OBH058035L

Smooth cornering

Avoid braking or gear changing in corners, especially when roads are wet. Ideally, corners should always be taken under gentle acceleration. If you follow these suggestions, tire wear will be held to a minimum.

OMC035004

Driving at night

Because night driving presents more hazards than driving in the daylight, here are some important tips to remember:

- Slow down and keep more distance between you and other vehicles, as it may be more difficult to see at night, especially in areas where there may not be any street lights.

- Adjust your mirrors to reduce the glare from other driver's headlights.
- Keep your headlights clean and properly aimed on vehicles not equipped with the automatic headlight aiming feature. Dirty or improperly aimed headlights will make it much more difficult to see at night.
- Avoid staring directly at the headlights of oncoming vehicles. You could be temporarily blinded, and it will take several seconds for your eyes to readjust to the darkness.

Driving in the rain

Rain and wet roads can make driving dangerous, especially if you're not prepared for the slick pavement. Here are a few things to consider when driving in the rain:

- A heavy rainfall will make it harder to see and will increase the distance needed to stop your vehicle, so slow down.
- Keep your windshield wiping equipment in good shape. Replace your windshield wiper blades when they show signs of streaking or missing areas on the windshield.
- If your tires are not in good condition, making a quick stop on wet pavement can cause a skid and possibly lead to an accident. Be sure your tires are in good shape.
- Turn on your headlights to make it easier for others to see you.
- Driving too fast through large puddles can affect your brakes. If you must go through puddles, try to drive through them slowly.
- If you believe you may have gotten your brakes wet, apply them lightly while driving until normal braking operation returns.

Driving in flooded areas

Avoid driving through flooded areas unless you are sure the water is no higher than the bottom of the wheel hub. Drive through any water slowly. Allow adequate stopping distance because brake performance may be affected.

After driving through water, dry the brakes by gently applying them several times while the vehicle is moving slowly.

Driving off-road

Drive carefully off-road because your vehicle may be damaged by rocks or roots of trees. Become familiar with the off-road conditions where you are going to drive before you begin driving.

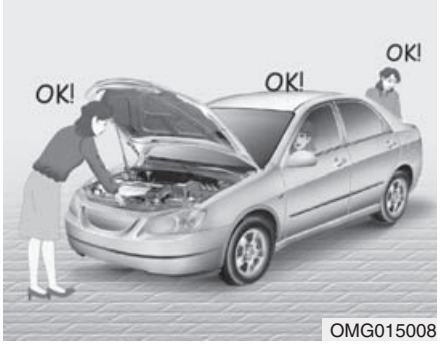

OMG015008

Highway driving

Tires

Adjust the tire inflation pressures to specification. Low tire inflation pressures will result in overheating and possible failure of the tires.

Avoid using worn or damaged tires which may result in reduced traction or tire failure.

✻ NOTICE

Never exceed the maximum tire inflation pressure shown on the tires.

⚠ WARNING

- **Underinflated or overinflated tires can cause poor handling, loss of vehicle control, and sudden tire failure leading to accidents, injuries, and even death. Always check tires for proper inflation before driving. For proper tire pressures, refer to "Tires and wheels" in section 8.**
- **Driving on tires with no or insufficient tread is dangerous. Worn-out tires can result in loss of vehicle control, collisions, injury, and even death. Worn-out tires should be replaced as soon as possible and should never be used for driving. Always check the tire tread before driving your car. For further information and tread limits, refer to "Tires and wheels" in section 7.**

Fuel, engine coolant and engine oil

High speed travel consumes more fuel than urban motoring. Do not forget to check both engine coolant and engine oil.

Drive belt

A loose or damaged drive belt may overheat the engine.

WINTER DRIVING

Severe weather conditions in the winter result in greater wear and other problems. To minimize winter driving problem, you should follow these suggestions:

Snowy or icy conditions

To drive your vehicle in deep snow, it may be necessary to use snow tires or to install tire chains on your tires. If snow tires are needed, it is necessary to select tires equivalent in size and type of the original equipment tires. Failure to do so may adversely affect the safety and handling of your car. Furthermore, speeding, rapid acceleration, sudden brake applications, and sharp turns are potentially very hazardous practices.
During deceleration, use engine braking to the fullest extent. Sudden brake applications on snowy or icy roads may cause skids to occur. You need to keep sufficient distance between the vehicle in operation in front and your vehicle. Also, apply the brake gently. It should be noted that installing tire chains on the tire will provide a greater driving force, but will not prevent side skids.

✻ NOTICE

Tire chains are not legal in all countries. Check country laws before fitting tire chains.

Snow tires

If you mount snow tires on your vehicle, make sure they are radial tires of the same size and load range as the original tires. Mount snow tires on all four wheels to balance your vehicle’s handling in all weather conditions. Keep in mind that the traction provided by snow tires on dry roads may not be as high as your vehicle's original equipment tires. You should drive cautiously even when the roads are clear. Check with the tire dealer for maximum speed recommendations.

⚠ WARNING - Snow tire size

Snow tires should be equivalent in size and type to the vehicle's standard tires. Otherwise, the safety and handling of your vehicle may be adversely affected.

Do not install studded tires without first checking local, state and municipal regulations for possible restrictions against their use.

Tire chains

Since the sidewalls of radial tires are thinner, they can be damaged by mounting some types of snow chains on them. Therefore, the use of snow tires is recommended instead of snow chains. Do not mount tire chains on vehicles equipped with aluminum wheels; snow chains may cause damage to the wheels. If snow chains must be used, use wire-type chains with a thickness of less than 12 mm (0.47 in). Damage to your vehicle caused by improper snow chain use is not covered by your vehicle manufacturers warranty.

Install tire chains only on the front tires.

⚠ CAUTION

- ***Make sure the snow chains are the correct size and type for your tires. Incorrect snow chains can cause damage to the vehicle body and suspension and may not be covered by your vehicle manufacturer warranty. Also, the snow chain connecting hooks may be damaged from contacting vehicle components causing the snow chains to come loose from the tire. Make sure the snow chains are SAE class "S" certified.***
- ***Always check chain installation for proper mounting after driving approximately 0.5 to 1 km (0.3 to 0.6 miles) to ensure safe mounting. Retighten or remount the chains if they are loose.***

Chain installation

When installing chains, follow the manufacturer's instructions and mount them as tightly as you can. Drive slowly with chains installed. If you hear the chains contacting the body or chassis, stop and tighten them. If they still make contact, slow down until it stops. Remove the chains as soon as you begin driving on cleared roads.

⚠ WARNING
- Mounting chains

When mounting snow chains, park the vehicle on level ground away from traffic. Turn on the vehicle Hazard Warning flashers and place a triangular emergency warning device behind the vehicle if available. Always place the vehicle in P (Park), apply the parking brake and turn off the engine before installing snow chains.

⚠ WARNING - Tire chains

- **The use of chains may adversely affect vehicle handling.**
- **Do not exceed 30 km/h (20 mph) or the chain manufacturer's recommended speed limit, whichever is lower.**
- **Drive carefully and avoid bumps, holes, sharp turns, and other road hazards, which may cause the vehicle to bounce.**
- **Avoid sharp turns or locked-wheel braking.**

⚠ CAUTION

- ***Chains that are the wrong size or improperly installed can damage your vehicle's brake lines, suspension, body and wheels.***
- ***Stop driving and retighten the chains any time you hear them hitting the vehicle.***

Use high quality ethylene glycol coolant

Your vehicle is delivered with high quality ethylene glycol coolant in the cooling system. It is the only type of coolant that should be used because it helps prevent corrosion in the cooling system, lubricates the water pump and prevents freezing. Be sure to replace or replenish your coolant in accordance with the maintenance schedule in section 7. Before winter, have your coolant tested to assure that its freezing point is sufficient for the temperatures anticipated during the winter.

Check battery and cables

Winter puts additional burdens on the battery system. Visually inspect the battery and cables as described in section 7. The level of charge in your battery can be checked by an authorized HYUNDAI dealer or a service station.

Change to "winter weight" oil if necessary

In some climates it is recommended that a lower viscosity "winter weight" oil be used during cold weather. See section 8 for recommendations. If you aren't sure what weight oil you should use, consult an authorized HYUNDAI dealer.

Check spark plugs and ignition system

Inspect your spark plugs as described in section 7 and replace them if necessary. Also check all ignition wiring and components to be sure they are not cracked, worn or damaged in any way.

To keep locks from freezing

To keep the locks from freezing, squirt an approved de-icer fluid or glycerine into the key opening. If a lock is covered with ice, squirt it with an approved de-icing fluid to remove the ice. If the lock is frozen internally, you may be able to thaw it out by using a heated key. Handle the heated key with care to avoid injury.

Use approved window washer anti-freeze in system

To keep the water in the window washer system from freezing, add an approved window washer anti-freeze solution in accordance with instructions on the container. Window washer anti-freeze is available from an authorized HYUNDAI dealer and most auto parts outlets. Do not use engine coolant or other types of anti-freeze as these may damage the paint finish.

Don't let your parking brake freeze

Under some conditions your parking brake can freeze in the engaged position. This is most likely to happen when there is an accumulation of snow or ice around or near the rear brakes or if the brakes are wet. If there is a risk the parking brake may freeze, apply it only temporarily while you put the shift lever in P (Park) and block the rear wheels so the vehicle cannot roll. Then release the parking brake.

Don't let ice and snow accumulate underneath

Under some conditions, snow and ice can build up under the fenders and interfere with the steering. When driving in severe winter conditions where this may happen, you should periodically check underneath the car to be sure the movement of the front wheels and the steering components is not obstructed.

Carry emergency equipment

Depending on the severity of the weather where you drive your car, you should carry appropriate emergency equipment. Some of the items you may want to carry include tire chains, tow straps or chains, flashlight, emergency flares, sand, shovel, jumper cables, window scraper, gloves, ground cloth, coveralls, blanket, etc.

Don't place foreign objects or materials in the engine compartment

Placement of foreign objects or materials which prevent cooling of the engine, in the engine compartment, may cause a failure or combustion. The manufacturer is not responsible for the damage caused by such placement.

VEHICLE WEIGHT

This section will guide you in the proper loading of your vehicle, to keep your loaded vehicle weight within its design rating capability. Properly loading your vehicle will provide maximum return of the vehicle design performance. Before loading your vehicle, familiarize yourself with the following terms for determining your vehicle's weight ratings, from the vehicle's specifications and the certification label:

Base curb weight

This is the weight of the vehicle including a full tank of fuel and all standard equipment. It does not include passengers, cargo, or optional equipment.

Vehicle curb weight

This is the weight of your new vehicle when you picked it up from your dealer plus any aftermarket equipment.

Cargo weight

This figure includes all weight added to the Base Curb Weight, including cargo and optional equipment.

GAW (Gross axle weight)

This is the total weight placed on each axle (front and rear) - including vehicle curb weight and all payload.

GAWR (Gross axle weight rating)

This is the maximum allowable weight that can be carried by a single axle (front or rear). These numbers are shown on the certification label.

The total load on each axle must never exceed its GAWR.

GVW (Gross vehicle weight)

This is the Base Curb Weight plus actual Cargo Weight plus passengers.

GVWR (Gross vehicle weight rating)

This is the maximum allowable weight of the fully loaded vehicle (including all options, equipment, passengers and cargo). The GVWR is shown on the certification label located on the driver's (or front passenger's) door sill.

Overloading

⚠ WARNING - Vehicle weight

The gross axle weight rating (GAWR) and the gross vehicle weight rating (GVWR) for your vehicle are on the certification label attached to the driver's (or front passenger's) door. Exceeding these ratings can cause an accident or vehicle damage. You can calculate the weight of your load by weighing the items (and people) before putting them in the vehicle. Be careful not to overload your vehicle.

TRAILER TOWING

We do not recommend using this vehicle for trailer towing.

Road warning / 6-2
In case of an emergency while driving / 6-3
If the engine will not start / 6-4
Emergency starting / 6-5
If the engine overheats / 6-7
If you have a flat tire / 6-8
Tire pressure monitoring system (TPMS) / 6-16
Towing / 6-21
Emergency commodity / 6-25

What to do in an emergency

6

ROAD WARNING

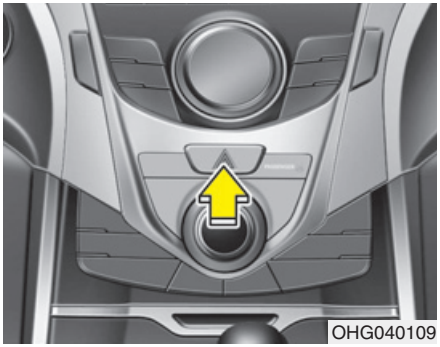
OHG040109

Hazard warning flasher

The hazard warning flasher serves as a warning to other drivers to exercise extreme caution when approaching, overtaking, or passing your vehicle.

It should be used whenever emergency repairs are being made or when the vehicle is stopped near the edge of a roadway.

Press the flasher switch with the ignition switch in any position. The flasher switch is located in the center console switch panel. All turn signal lights will flash simultaneously.

- The hazard warning flasher operates whether your vehicle is running or not.
- The turn signals do not work when the hazard flasher is on.
- The hazard waning flasher should always be on while the vehicle is being towed.

IN CASE OF AN EMERGENCY WHILE DRIVING

If the engine stalls at a crossroad or crossing

If the engine stalls at a crossroad or crossing, set the shift lever in the N (Neutral) position and then push the vehicle to a safe place.

If you have a flat tire while driving

If a tire goes flat while you are driving:

1. Take your foot off the accelerator pedal and let the car slow down while driving straight ahead. Do not apply the brakes immediately or attempt to pull off the road as this may cause a loss of control. When the car has slowed to such a speed that it is safe to do so, brake carefully and pull off the road. Drive off the road as far as possible and park on firm, level ground. If you are on a divided highway, do not park in the median area between the two traffic lanes.
2. When the vehicle is stopped, turn on your emergency hazard flashers, set the parking brake and put the transaxle in P (Park).
3. Have all passengers get out of the car. Be sure they all get out on the side of the car that is away from traffic.
4. When changing a flat tire, follow the instruction provided later in this section.

If engine stalls while driving

1. Reduce your speed gradually, keeping a straight line. Move cautiously off the road to a safe place.
2. Turn on your emergency flashers.
3. Try to start the engine again. If your vehicle will not start, contact an authorized HYUNDAI dealer or seek other qualified assistance.

IF THE ENGINE WILL NOT START

If engine doesn't turn over or turns over slowly

1. If your vehicle has an automatic transaxle, be sure the shift lever is in N (Neutral) or P (Park) and the emergency brake is set.
2. Check the battery connections to be sure they are clean and tight.
3. Turn on the interior light. If the light dims or goes out when you operate the starter, the battery is discharged.
4. Check the starter connections to be sure they are securely tightened.
5. Do not push or pull the vehicle to start it. See instructions for "Jump starting".

⚠ WARNING

If the engine will not start, do not push or pull the car to start it. This could result in a collision or cause other damage.

If engine turns over normally but does not start

1. Check fuel level.
2. With the ignition switch in the LOCK /OFF position, check all connectors at the ignition coils and spark plugs. Reconnect any that may be disconnected or loose.
3. If the engine still does not start, call an authorized HYUNDAI dealer or seek other qualified assistance.

EMERGENCY STARTING

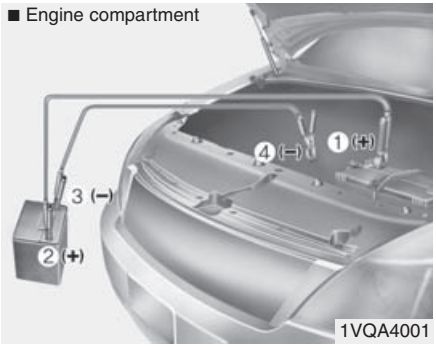

Connect cables in numerical order and disconnect in reverse order.

Jump starting

Jump starting can be dangerous if done incorrectly. Therefore, to avoid harm to yourself or damage to your vehicle or battery, follow the jump starting procedures. If in doubt, we strongly recommend that you have a competent technician or towing service jump start your vehicle.

⚠ CAUTION

Use only a 12-volt jumper system. You can damage a 12-volt starting motor, ignition system, and other electrical parts beyond repair by use of a 24-volt power supply (either two 12-volt batteries in series or a 24-volt motor generator set).

⚠ WARNING - Battery

Never attempt to check the electrolyte level of the battery as this may cause the battery to rupture or explode causing serious injury.

⚠ WARNING - Battery

- **Keep all flames or sparks away from the battery. The battery produces hydrogen gas which may explode if exposed to flame or sparks.**

  If these instructions are not followed exactly, serious personal injury and damage to the vehicle may occur! If you are not sure how to follow this procedure, seek qualified assistance. Automobile batteries contain sulfuric acid. This is poisonous and highly corrosive. When jump starting, wear protective glasses and be careful not to get acid on yourself, your clothing or on the car.
- **Do not attempt to jump start the vehicle if the discharged battery is frozen or if the electrolyte level is low; the battery may rupture or explode.**
- **Do not allow the (+) and (-) jumper cables to touch. It may cause sparks.**
- **The battery may rupture or explode when you jump start with a low or frozen battery.**

Jump starting procedure

1. Make sure the booster battery is 12-volt and that its negative terminal is grounded.
2. If the booster battery is in another vehicle, do not allow the vehicles to touch.
3. Turn off all unnecessary electrical loads.
4. Connect the jumper cables in the exact sequence shown in the illustration. First connect one end of a jumper cable to the positive terminal of the jump start connector (1), then connect the other end to the positive terminal on the booster battery (2).

   Proceed to connect one end of the other jumper cable to the negative terminal of the booster battery (3), then the other end to the negative terminal of the jump start connector (4). Do not connect it to or near any part that moves when the engine is cranked.

   Do not allow the jumper cables to contact anything except the correct battery terminals or the correct ground. Do not lean over the battery when making connections.

⚠ CAUTION - Battery cables

Do not connect the jumper cable from the negative terminal of the booster battery to the negative terminal of the discharged battery. This can cause the discharged battery to overheat and crack, releasing battery acid.

5. Start the engine of the vehicle with the booster battery and let it run at 2,000 rpm, then start the engine of the vehicle with the discharged battery.

If the cause of your battery discharging is not apparent, you should have your vehicle checked by an authorized HYUNDAI dealer.

Push-starting

Vehicles equipped with automatic transaxle cannot be push-started.

Follow the directions in this section for jump-starting.

⚠ WARNING

Never tow a vehicle to start it because the sudden surge forward when the engine starts could cause a collision with the tow vehicle.

IF THE ENGINE OVERHEATS

If your temperature gauge indicates overheating, you will experience a loss of power, or hear loud pinging or knocking, the engine is probably too hot. If this happens, you should:

1. Pull off the road and stop as soon as it is safe to do so.
2. Place the shift lever in P (Park) and set the parking brake. If the air conditioning is on, turn it off.
3. If engine coolant is running out under the car or steam is coming out from the hood, stop the engine. Do not open the hood until the coolant has stopped running or the steaming has stopped. If there is no visible loss of engine coolant and no steam, leave the engine running and check to be sure the engine cooling fan is operating. If the fan is not running, turn the engine off.
4. Check to see if the water pump drive belt is missing. If it is not missing, check to see that it is tight. If the drive belt seems to be satisfactory, check for coolant leaking from the radiator, hoses or under the car. (If the air conditioning had been in use, it is normal for cold water to be draining from it when you stop).

⚠ WARNING

While the engine is running, keep hair, hands and clothing away from moving parts such as the fan and drive belts to prevent injury.

5. If the water pump drive belt is broken or engine coolant is leaking out, stop the engine immediately and call the nearest authorized HYUNDAI dealer for assistance.

⚠ WARNING

Do not remove the radiator cap when the engine is hot. This can allow coolant to blow out of the opening and cause serious burns.

6. If you cannot find the cause of the overheating, wait until the engine temperature has returned to normal. Then, if coolant has been lost, carefully add coolant to the reservoir to bring the fluid level in the reservoir up to the halfway mark.
7. Proceed with caution, keeping alert for further signs of overheating. If overheating happens again, call an authorized HYUNDAI dealer for assistance.

⚠ CAUTION

- ***Serious loss of coolant indicates there is a leak in the cooling system and this should be checked as soon as possible by an authorized HYUNDAI dealer.***
- ***When the engine overheats from low engine coolant, suddenly adding engine coolant may cause cracks in the engine. To prevent damage, add engine coolant slowly in small quantities.***

IF YOU HAVE A FLAT TIRE

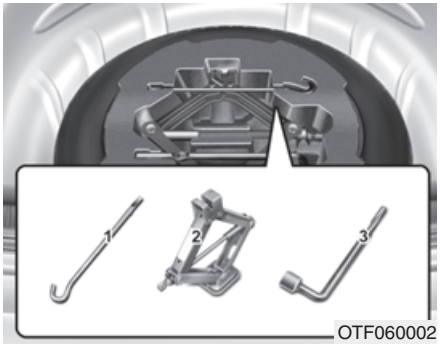

Jack and tools

The jack, jack handle, and wheel lug nut wrench are stored in the luggage compartment. Pull up the luggage box cover to reach this equipment.

(1) Jack handle

(2) Jack

(3) Wheel lug nut wrench

Jacking instructions

The jack is provided for emergency tire changing only.

To prevent the jack from “rattling” while the vehicle is in motion, store it properly.

Follow jacking instructions to reduce the possibility of personal injury.

⚠ WARNING - Changing tires

- **Never attempt vehicle repairs in the traffic lanes of a public road or highway.**
- **Always move the vehicle completely off the road and onto the shoulder before trying to change a tire. The jack should be used on level firm ground. If you cannot find a firm, level place off the road, call a towing service company for assistance.**

(Continued)

(Continued)

- **Be sure to use the correct front and rear jacking positions on the vehicle; never use the bumpers or any other part of the vehicle for jacking support.**
- **The vehicle can easily roll off the jack causing serious injury or death.**
- **Do not get under a vehicle that is supported by a jack.**
- **Do not start or run the engine while the vehicle is on the jack.**
- **Do not allow anyone to remain in the vehicle while it is on the jack.**
- **Make sure any children present are in a secure place away from the road and from the vehicle to be raised with the jack.**

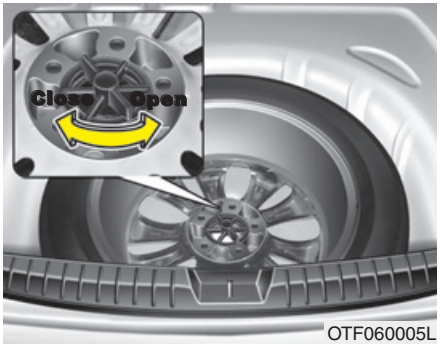

OTF060005L

Removing and storing the spare tire

Turn the tire hold-down wing bolt counterclockwise.

Store the tire in the reverse order of removal.

To prevent the spare tire and tools from “rattling” while the vehicle is in motion, store them properly.

OBH068002L

Changing tires

1. Park on a level surface and apply the parking brake firmly.
2. Place the shift lever into P (Park).
3. Activate the hazard warning flasher.

1JBA6504

4. Remove the wheel lug nut wrench, jack, jack handle, and spare tire from the vehicle.
5. Block both the front and rear of the wheel that is diagonally opposite the jack position.

⚠ WARNING - Changing a tire

- **To prevent vehicle movement while changing a tire, always set the parking brake fully, and always block the wheel diagonally opposite the wheel being changed.**
- **We recommend that the wheels of the vehicle be blocked, and that no person remain in the vehicle that is being jacked.**

OHG060004

6. Loosen the wheel lug nuts counterclockwise one turn each, but do not remove any nut until the tire has been raised off the ground.

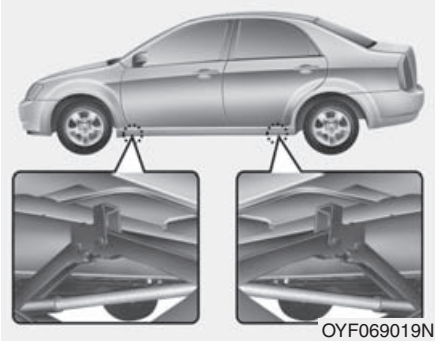
OYF069019N

7. Place the jack at the front or rear jacking position closest to the tire you are changing. Place the jack at the designated locations under the frame. The jacking positions are plates welded to the frame with two tabs and a raised dot to index with the jack.

⚠ WARNING - Jack location

To reduce the possibility of injury, be sure to use only the jack provided with the vehicle and in the correct jack position; never use any other part of the vehicle for jack support.

⚠ CAUTION

Do not place the jack on the plastic guard. The plastic guard may be damaged.

OHG060006

8. Insert the jack handle into the jack and turn it clockwise, raising the vehicle until the tire just clears the ground. This measurement is approximately 30 mm (1.2 in). Before removing the wheel lug nuts, make sure the vehicle is stable and that there is no chance for movement or slippage.

9. Loosen the wheel nuts and remove them with your fingers. Slide the wheel off the studs and lay it flat so it cannot roll away. To put the wheel on the hub, pick up the spare tire, line up the holes with the studs and slide the wheel onto them. If this is difficult, tip the wheel slightly and get the top hole in the wheel lined up with the top stud. Then jiggle the wheel back and forth until the wheel can be slid over the other studs.

⚠ WARNING

- **Wheels may have sharp edges. Handle them carefully to avoid possible severe injury.**
- **Before putting the wheel into place, be sure that there is nothing on the hub or wheel (such as mud, tar, gravel, etc.) that interferes with the wheel from fitting solidly against the hub. If there is, remove it. If the contact of the mounting surface between the wheel and hub is not good, the wheel nuts could come loose and cause the loss of a wheel. Loss of a wheel may result in loss of control of the vehicle. This may cause serious injury or death.**

10. To reinstall the wheel, hold it on the studs, put the wheel nuts on the studs and tighten them finger tight. The nuts should be installed with their tapered small diameter ends directed inward. Jiggle the tire to be sure it is completely seated, then tighten the nuts as much as possible with your fingers again.
11. Lower the car to the ground by turning the wheel nut wrench counterclockwise.

OHG060007L

Then position the wrench as shown in the drawing and tighten the wheel nuts. Be sure the socket is seated completely over the nut. Do not stand on the wrench handle or use an extension pipe over the wrench handle. Go around the wheel tightening every nut following the numerical sequence shown in the image until they are all tight. Then double-check each nut for tightness. After changing wheels, have an authorized HYUNDAI dealer tighten the wheel nuts to their proper torque as soon as possible.

Wheel nut tightening torque:

Steel wheel & aluminum alloy wheel:

9~11 kg·m (65~79 lb·ft)

If you have a tire gauge, remove the valve cap and check the air pressure. If the pressure is lower than recommended, drive slowly to the nearest service station and inflate to the correct pressure. If it is too high, adjust it until it is correct. Always reinstall the valve cap after checking or adjusting tire pressure. If the cap is not replaced, air may leak from the tire. If you lose a valve cap, buy another and install it as soon as possible.

After you have changed wheels, always secure the flat tire in its place and return the jack and tools to their proper storage locations.

⚠ CAUTION

Your vehicle has metric threads on the wheel studs and nuts. Make certain during wheel removal that the same nuts that were removed are reinstalled - or, if replaced, that nuts with metric threads and the same chamfer configuration are used. Installation of a non-metric thread nut on a metric stud or vice-versa will not secure the wheel to the hub properly and will damage the stud so that it must be replaced.

Note that most lug nuts do not have metric threads. Be sure to use extreme care in checking for thread style before installing aftermarket lug nuts or wheels. If in doubt, consult an authorized HYUNDAI dealer.

⚠ WARNING - Wheel studs

If the studs are damaged, they may lose their ability to retain the wheel. This could lead to the loss of the wheel and a collision resulting in serious injuries.

To prevent the jack, jack handle, wheel lug nut wrench and spare tire from rattling while the vehicle is in motion, store them properly.

⚠ WARNING - Inadequate spare tire pressure

Check the inflation pressures as soon as possible after installing the spare tire. Adjust it to the specified pressure, if necessary. Refer to “Tires and wheels” section 8.

Jack label

■ Example

• Type A

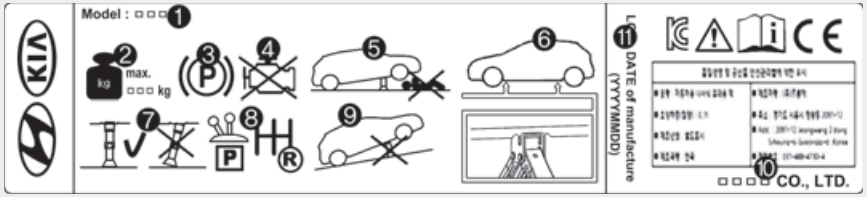

OHYK064001

• Type B

OHYK064002

❊ The actual Jack label in the vehicle may differ from the illustration. For more detailed specifications, refer to the label attached to the jack.

1. Model Name
2. Maximum allowable load
3. When using the jack, set your parking brake.
4. When using the jack, stop the engine.
5. Do not get under a vehicle that is supported by a jack.
6. The designated locations under the frame
7. When supporting the vehicle, the base plate of jack must be vertical under the lifting point.
8. Shift into Reverse gear on vehicles with manual transaxle or move the shift lever to the P position on vehicles with automatic transaxle.
9. The jack should be used on firm level ground.
10. Jack manufacture
11. Production date

EC Declaration of Conformity for Jack

CE

EC Declaration of Conformity
according to EC Machinery Directive 2006/42/EC

We, **SAMKI IND. CO., LTD.**
 # 22, Hyojuk3-Gil, Buk-Gu, Ulsan, Korea
declare under our sole responsibility that the product

Product : **Jack Assembly**
Type Designation(s) : **Jack Assembly-600kg, Jack Assembly-700kg**
Jack Assembly-800kg, Jack Assembly-1000kg
Jack Assembly-1200kg, Jack Assembly-1500kg
Serial No. : **N/A**
Year of Manufacture : 2013
to which this declaration relates is in conformity with the following standard(s) or other normative document(s);

EN ISO12100 (2010)	Safety of machinery - General principles for design – Risk assessment and risk reduction
EN ISO12100-2/A1 (2009)	Safety of machinery - Basic concepts, general principles for design, Part 2 : Technical principles
EN 1494/A1 (2008)	Mobile or movable jacks and associated lifting equipment

following the provisions of Directive(s);

2006/42/EC	Directive on the approximation of the laws of Member States relating to machinery (OJ L157 Jun, 9, 2006)

Ulsan , Korea / Jul .25 .2013 Hyun Duck, Cho President

(Place and date of issue)(name and signature or equivalent making of authorized person)

* T.C.F Compiling Person: **Safenet Limited (European Notified body : 1674)**
Denford Garage, Denford, Kettering Northants, NN14 4EQ, England

JACKDOC14S

TIRE PRESSURE MONITORING SYSTEM (TPMS) (IF EQUIPPED)

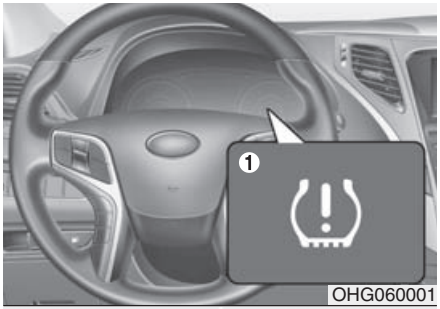

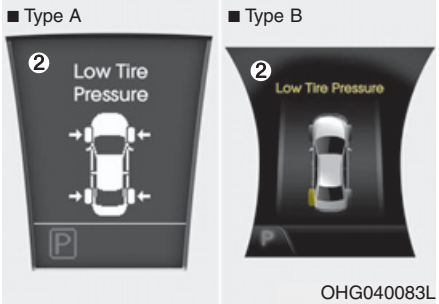

(1) Low tire pressure telltale / TPMS malfunction indicator

(2) Low tire pressure position telltale (Shown on the LCD display)

Each tire, including the spare (if provided), should be checked monthly when cold and inflated to the inflation pressure recommended by the vehicle manufacturer on the vehicle placard or tire inflation pressure label. (If your vehicle has tires of a different size than the size indicated on the vehicle placard or tire inflation pressure label, you should determine the proper tire inflation pressure for those tires.)

As an added safety feature, your vehicle has been equipped with a tire pressure monitoring system (TPMS) that illuminates a low tire pressure telltale when one or more of your tires is significantly under-inflated. Accordingly, when the low tire pressure telltale illuminates, you should stop and check your tires as soon as possible, and inflate them to the proper pressure. Driving on a significantly under-inflated tire causes the tire to overheat and can lead to tire failure. Under-inflation also reduces fuel efficiency and tire tread life, and may affect the vehicle's handling and stopping ability.

Please note that the TPMS is not a substitute for proper tire maintenance, and it is the driver's responsibility to maintain correct tire pressure, even if under-inflation has not reached the level to trigger illumination of the TPMS low tire pressure telltale.

Your vehicle has also been equipped with a TPMS malfunction indicator to indicate when the system is not operating properly. The TPMS malfunction indicator is combined with the low tire pressure telltale. When the system detects a malfunction, the telltale will flash for approximately 1 minute and then remain continuously illuminated. This sequence will continue upon subsequent vehicle start-ups as long as the malfunction exists. When the TPMS malfunction indicator remains illuminated after blinking for approximately 1 minute, the system may not be able to detect or signal low tire pressure as intended.

TPMS malfunctions may occur for a variety of reasons, including the installation of replacement or alternate tires or wheels on the vehicle that prevent the TPMS from functioning properly. Always check the TPMS malfunction telltale after replacing one or more tires or wheels on your vehicle to ensure that the replacement or alternate tires and wheels allow the TPMS to continue to function properly.

✻ NOTICE

Take your vehicle to the nearest authorized HYUNDAI dealer and have the system checked if any of the below happens:

1. **The low tire pressure telltale/ TPMS malfunction indicator does not illuminate for 3 seconds when the ignition switch is turned to the ON position or engine is running.**
2. **The TPMS malfunction indicator remains illuminated after blinking for approximately 1 minute.**
3. **The Low tire pressure position telltale remains illuminated.**

Low tire pressure telltale

Low tire pressure position telltale

When the tire pressure monitoring system warning indicators are illuminated, one or more of your tires is significantly under-inflated. The low tire pressure position telltale light will indicate which tire is significantly under-inflated by illuminating the corresponding position light.

If either telltale illuminates, immediately reduce your speed, avoid hard cornering and anticipate increased stopping distances. You should stop and check your tires as soon as possible. Inflate the tires to the proper pressure as indicated on the vehicle's placard or tire inflation pressure label located on the driver's side center pillar outer panel. If you cannot reach a service station or if the tire cannot hold the newly added air, replace the low pressure tire with a spare tire.

After restarting with the spare tire, the TPMS malfunction indicator and low tire pressure position telltale light will remain on about 20 minutes of continuous driving, then the TPMS malfunction indicator will blink for approximately 1 minute but the low pressure position telltale light will turn off.

⚠ CAUTION

In winter or cold weather, the low tire pressure telltale may illuminate if the tire pressure was adjusted to the recommended tire inflation pressure in warm weather. It does not mean your TPMS is malfunctioning because the decreased temperature leads to a proportional lowering of tire pressure.

When you drive your vehicle from a warm area to a cold area or from a cold area to a warm area, or the outside temperature is greatly higher or lower, you should check the tire inflation pressure and adjust the tires to the recommended tire inflation pressure.

⚠ WARNING - Low pressure damage

Significantly low tire pressure makes the vehicle unstable and can contribute to loss of vehicle control and increased braking distances.

Continued driving on low pressure tires can cause the tires to overheat and fail.

TPMS (Tire Pressure Monitoring System) malfunction indicator

The TPMS malfunction indicator will illuminate after it blinks for approximately one minute when there is a problem with the Tire Pressure Monitoring System. If the system is able to correctly detect an underinflation warning at the same time as system failure then the TPMS malfunction indicator remains illuminated after blinking for approximately 1 minute and the low tire pressure position telltale will illuminate e.g. if Front Left sensor fails, the TPMS malfunction indicator remains illuminated after blinking for approximately 1 minute, but if the Front Right, Rear Left, or Rear Right tire is under-inflated, the low tire pressure position telltales may illuminate together with the TPMS malfunction indicator.

Have the system checked by an authorized HYUNDAI dealer as soon as possible to determine the cause of the problem.

⚠ CAUTION

- ***The TPMS malfunction indicator may blink for approximately 1 minute and then remain continuously illuminated if the vehicle is moving around electric power supply cables or radios transmitter such as at police stations, government and public offices, broadcasting stations, military installations, airports, or transmitting towers, etc. This can interfere with normal operation of the Tire Pressure Monitoring System (TPMS).***
- ***The TPMS malfunction indicator may blink for approximately 1 minute and then remain continuously illuminated if snow chains are used or some separate electronic devices such as notebook computer, mobile charger, remote starter or navigation etc., are used in the vehicle. This can interfere with normal operation of the Tire Pressure Monitoring System (TPMS).***

Changing a tire with TPMS

If you have a flat tire, the low Tire Pressure and Position telltales will come on. Have the flat tire repaired by an authorized HYUNDAI dealer as soon as possible or replace the flat tire with the spare tire.

⚠ CAUTION

NEVER use a puncture-repairing agent to repair and/or inflate a low pressure tire. The tire sealant can damage the tire pressure sensor. If used, you will have to replace the tire pressure sensor.

Each wheel is equipped with a tire pressure sensor mounted inside the tire behind the valve stem. You must use TPMS specific wheels. It is recommended that you always have your tires serviced by an authorized HYUNDAI dealer.

After you replace the low pressure tire with the spare tire, the TPMS malfunction indicator may blink for approximately 1 minute and then remain continuously illuminated because the TPMS sensor is not mounted on the spare wheel.

Once the low pressure tire is reinflated to the recommended pressure and installed on the vehicle is initiated by an authorized HYUNDAI dealer, the TPMS malfunction indicator and the low tire pressure and position telltales will turn off within a few minutes of driving.

If the indicators do not go off after a few minutes of driving, please visit an authorized HYUNDAI dealer.

You may not be able identify a low tire by simply looking at it. Always use a good quality tire pressure gauge to measure the tire's inflation pressure. Please note that a tire that is hot (from being driven) will have a higher pressure measurement than a tire that is cold (from sitting stationary for at least 3 hours and driven less than 1.6 km (1 mile) during that 3 hour period).

Allow the tire to cool before measuring the inflation pressure. Always be sure the tire is cold before inflating to the recommended pressure.

A cold tire means the vehicle has been sitting for 3 hours and driven for less than 1.6 km (1 mile) in that 3 hour period.

⚠ CAUTION

Do not use any tire sealant if your vehicle is equipped with a Tire Pressure Monitoring System. The liquid sealant can damage the tire pressure sensors.

⚠ WARNING - TPMS

- The TPMS cannot alert you to severe and sudden tire damage caused by external factors such as nails or road debris.
- If you feel any vehicle instability, immediately take your foot off the accelerator, apply the brakes gradually and with light force, and slowly move to a safe position off the road.

⚠ WARNING - Protecting TPMS

Tampering with, modifying, or disabling the Tire Pressure Monitoring System (TPMS) components may interfere with the system's ability to warn the driver of low tire pressure conditions and/or TPMS malfunctions. Tampering with, modifying, or disabling the Tire Pressure Monitoring System (TPMS) components may void the warranty for that portion of the vehicle.

⚠ WARNING - For EUROPE

- Do not modify the vehicle, it may interfere with the TPMS function.
- The wheels on the market do not have a TPMS sensor.

  For your safety, we recommend that you use parts for replacement from an authorized HYUNDAI dealer.
- If you use the wheels on the market, use a TPMS sensor approved by a HYUNDAI dealer. If your vehicle is not equipped with a TPMS sensor or TPMS does not work properly, you may fail the periodic vehicle inspection conducted in your country.

❋All vehicles sold in the EUROPE market during below period must be equipped with TPMS.

- New model vehicle : Nov. 1, 2012 ~
- Current model vehicle : Nov. 1, 2014~ (Based on vehicle registrations)

TOWING

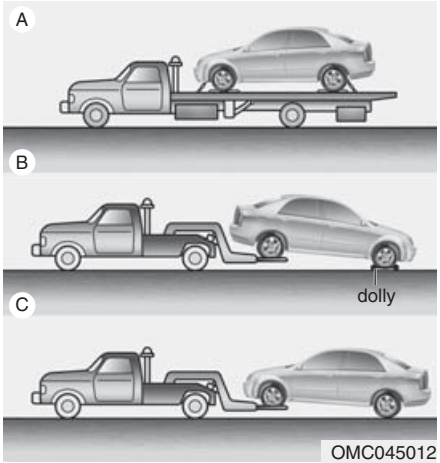

Towing service

If emergency towing is necessary, we recommend having it done by an authorized HYUNDAI dealer or a commercial tow-truck service. Proper lifting and towing procedures are necessary to prevent damage to the vehicle. The use of wheel dollies or flatbed is recommended.

It is acceptable to tow the vehicle with the rear wheels on the ground (without dollies) and the front wheels off the ground.

If any of the loaded wheels or suspension components are damaged or the vehicle is being towed with the front wheels on the ground, use a towing dolly under the front wheels.

When being towed by a commercial tow truck and wheel dollies are not used, the front of the vehicle should always be lifted, not the rear.

✻ NOTICE

If the EPB does not release normally, take your vehicle to an authorized HYUNDAI dealer by loading the vehicle on a flatbed tow truck and have the system checked.

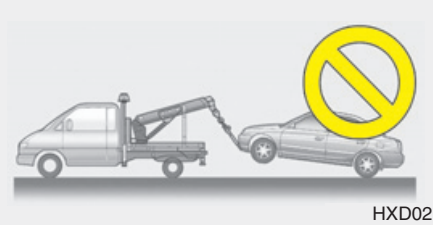

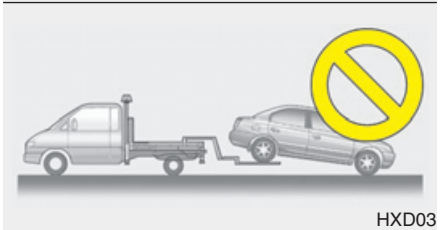

⚠ CAUTION

- ***Do not tow the vehicle with the front wheels on the ground as this may cause damage to the vehicle.***
- ***Do not tow with sling-type equipment. Use wheel lift or flatbed equipment.***

When towing your vehicle in an emergency without wheel dollies :

1. Set the ignition switch in the ACC position.
2. Place the shift lever in N (Neutral).
3. Release the parking brake.

⚠ CAUTION

Failure to place the shift lever in N (Neutral) may cause internal damage to the transaxle.

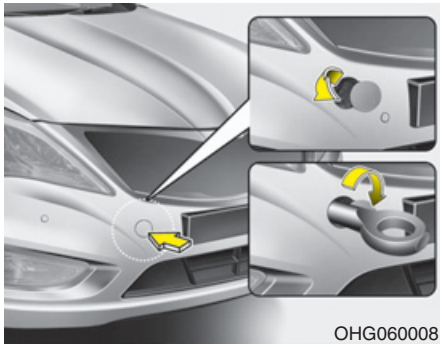

Removable towing hook (front, if equipped)

1. Open the trunk, and remove the towing hook from the tool case.
2. Remove the hole cover pressing the lower part of the cover on the front bumper.
3. Install the towing hook by turning it clockwise into the hole until it is fully secured.
4. Remove the towing hook and install the cover after use.

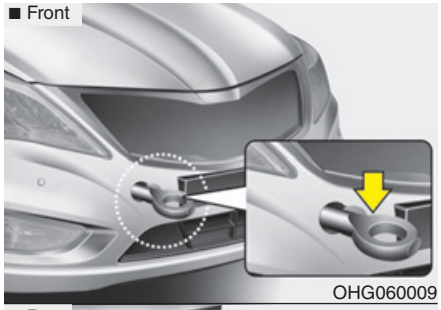

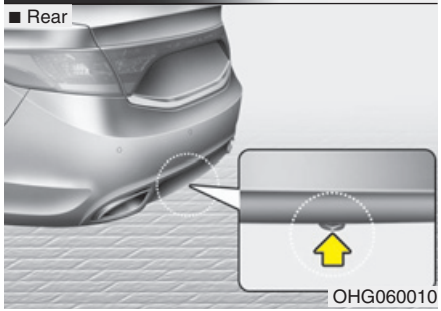

Emergency towing

If towing is necessary, we recommend you to have it done by an authorized HYUNDAI dealer or a commercial tow truck service.

If towing service is not available in an emergency, your vehicle may be temporarily towed using a cable or chain secured to the emergency towing hook under the front/rear of the vehicle. Use extreme caution when towing the vehicle. A driver must be in the vehicle to steer it and operate the brakes.

Towing in this manner may be done only on hard-surfaced roads for a short distance and at low speeds. Also, the wheels, axles, power train, steering and brakes must all be in good condition.

- Do not use the tow hooks to pull a vehicle out of mud, sand or other conditions from which the vehicle cannot be driven out under its own power.
- Avoid towing a vehicle heavier than the vehicle doing the towing.
- The drivers of both vehicles should communicate with each other frequently.

⚠ CAUTION

- ***Attach a towing strap to the tow hook.***
- ***Using a portion of the vehicle other than the tow hooks for towing may damage the body of your vehicle.***
- ***Use only a cable or chain specifically intended for use in towing vehicles. Securely fasten the cable or chain to the towing hook provided.***

- Before emergency towing, check that the hook is not broken or damaged.
- Fasten the towing cable or chain securely to the hook.
- Do not jerk the hook. Apply steady and even force.
- To avoid damaging the hook, do not pull from the side or at a vertical angle. Always pull straight ahead.

⚠ WARNING

Use extreme caution when towing the vehicle.

- **Avoid sudden starts or erratic driving maneuvers which would place excessive stress on the emergency towing hook and towing cable or chain. The hook and towing cable or chain may break and cause serious injury or damage.**
- **If the disabled vehicle is unable to be moved, do not forcibly continue the towing. Contact an authorized HYUNDAI dealer or a commercial tow truck service for assistance.**
- **Tow the vehicle as straight ahead as possible.**
- **Keep away from the vehicle during towing.**

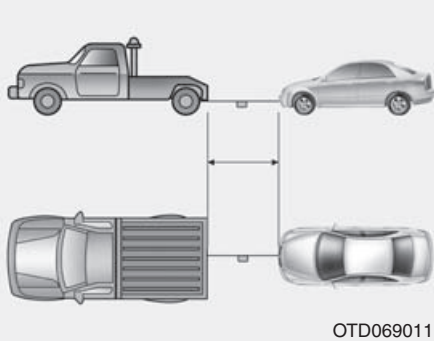
OTD069011

- Use a towing strap less than 5 m (16 feet) long. Attach a white or red cloth (about 30 cm (12 inches) wide) in the middle of the strap for easy visibility.
- Drive carefully so that the towing strap is not loosened during towing.

Emergency towing precautions

- Place the ignition switch in ACC so the steering wheel isn't locked.
- Place the transaxle shift lever in N (Neutral).
- Release the parking bake.
- Press the brake pedal with more force than normal since you will have reduced brake performance.
- More steering effort will be required because the power steering system will be disabled.
- If you are driving down a long hill, the brakes may overheat and brake performance will be reduced. Stop often and let the brakes cool off.

⚠ CAUTION - Automatic transaxle

- ***If the car is being towed with all four wheels on the ground, it can be towed only from the front. Be sure that the transaxle is in neutral. Be sure the steering is unlocked by placing the ignition switch in the ACC position. A driver must be in the towed vehicle to operate the steering and brakes.***
- ***To avoid serious damage to the automatic transaxle, limit the vehicle speed to 15 km/h (10 mph) and drive less than 1.5 km (1 mile) when towing.***
- ***Before towing, check the automatic transaxle fluid leak under your vehicle. If the automatic transaxle fluid is leaking, a flatbed equipment or towing dolly must be used.***

Tie-down hook

⚠ WARNING

Do not use the hooks under the vehicle for towing purposes. These hooks are designed ONLY for transport tie-down. If the tie-down hooks are used for towing, the tie-down hooks or deflector will be damaged and this could lead to serious injury.

⚠ CAUTION

When using the tie-down hook for transport tie-down, install chains faced rearward.

EMERGENCY COMMODITY (IF EQUIPPED)

There are some emergency commodities in the vehicle to help you respond to the emergency situation.

Fire extinguisher

If there is small fire and you know how to use the fire extinguisher, take the following steps carefully.

1. Pull the pin at the top of the extinguisher that keeps the handle from being accidentally pressed.
2. Aim the nozzle toward the base of the fire.
3. Stand approximately 2.5 m (8 ft) away from the fire and squeeze the handle to discharge the extinguisher. If you release the handle, the discharge will stop.
4. Sweep the nozzle back and forth at the base of the fire. After the fire appears to be out, watch it carefully since it may re-ignite.

First aid kit

There are some items such as scissors, bandage and adhesive tape and etc. in the kit to give first aid to an injured person.

Triangle reflector

Place the triangle reflector on the road to warn oncoming vehicles during emergencies, such as when the vehicle is parked by the roadside due to any problems.

Tire pressure gauge (If equipped)

Tires normally lose some air in day-to-day use, and you may have to add a few pounds of air periodically and it is not usually a sign of a leaking tire, but of normal wear. Always check tire pressure when the tires are cold because tire pressure increases with temperature.

To check the tire pressure, take the following steps;

1. Unscrew the inflation valve cap that is located on the rim of the tire.
2. Press and hold the gauge against the tire valve. Some air will escape as you begin and more will escape if you don't press the gauge in firmly.
3. A firm non-leaking push will activate the gauge.
4. Read the tire pressure on the gauge to know whether the tire pressure is low or high.
5. Adjust the tire pressures to the specified pressure. Refer to “Tires and wheels” in section 8.
6. Reinstall the inflation valve cap.

Engine compartment / 7-2
Maintenance services / 7-3
Owner maintenance / 7-4
Scheduled maintenance service / 7-6
Explanation of scheduled maintenance items / 7-24
Engine oil / 7-27
Engine coolant / 7-28
Brake fluid / 7-31
Power steering fluid / 7-32
Washer fluid / 7-33
Parking brake / 7-33
Air cleaner / 7-34
Climate control air filter / 7-36
Wiper blades / 7-38
Battery / 7-40
Tires and wheels / 7-43

Maintenance

7

Fuses / 7-53
Light bulbs / 7-65
Appearance care / 7-74
Emission control system / 7-80

ENGINE COMPARTMENT

■ 2.4L

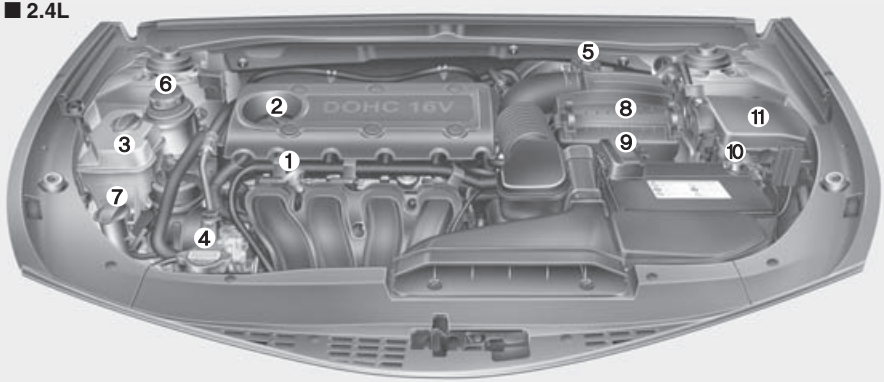

■ 3.0L

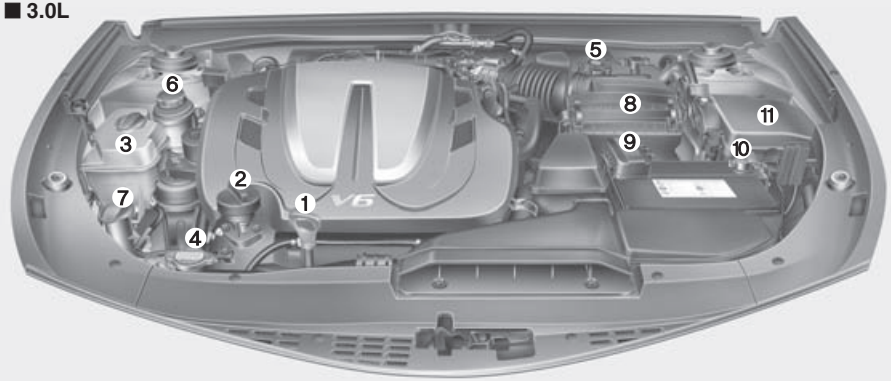

1. Engine oil dipstick
2. Engine oil filler cap
3. Engine coolant reservoir
4. Radiator cap
5. Brake fluid reservoir
6. Power steering fluid reservoir
7. Windshield washer fluid reservoir
8. Air cleaner
9. Positive battery terminal
10. Negative battery terminal
11. Fuse box

OHG010003L/OHG010004L

MAINTENANCE SERVICES

You should exercise the utmost care to prevent damage to your vehicle and injury to yourself whenever performing any maintenance or inspection procedures.

Should you have any doubts concerning the inspection or servicing of your vehicle, we strongly recommend that you have an authorized HYUNDAI dealer perform this work.

An authorized HYUNDAI dealer has factory-trained technicians and genuine HYUNDAI parts to service your vehicle properly. For expert advice and quality service, see an authorized HYUNDAI dealer.

Inadequate, incomplete or insufficient servicing may result in operational problems with your vehicle that could lead to vehicle damage, an accident, or personal injury.

Owner's responsibility

✻ NOTICE

Maintenance Service and Record Retention are the owner's responsibility.

You should retain documents that show proper maintenance has been performed on your vehicle in accordance with the scheduled maintenance service charts shown on the following pages. You need this information to establish your compliance with the servicing and maintenance requirements of your vehicle warranties.

Detailed warranty information is provided in your Service Passport.

Repairs and adjustments required as a result of improper maintenance or a lack of required maintenance are not covered.

We recommend you have your vehicle maintained and repaired by an authorized HYUNDAI dealer. An authorized HYUNDAI dealer meets HYUNDAI's high service quality standards and receives technical support from HYUNDAI in order to provide you with a high level of service satisfaction.

Owner maintenance precautions

Improper or incomplete service may result in problems. This section gives instructions only for the maintenance items that are easy to perform.

As explained earlier in this section, several procedures can be done only by an authorized HYUNDAI dealer with special tools.

✻ NOTICE

Improper owner maintenance during the warranty period may affect warranty coverage. For details, read the separate Service Passport provided with the vehicle. If you're unsure about any servicing or maintenance procedure, have it done by an authorized HYUNDAI dealer.

⚠ WARNING - Maintenance work

- **Performing maintenance work on a vehicle can be dangerous. You can be seriously injured while performing some maintenance procedures. If you lack sufficient knowledge and experience or the proper tools and equipment to do the work, have it done by an authorized HYUNDAI dealer.**
- **Working under the hood with the engine running is dangerous. It becomes even more dangerous when you wear jewelry or loose clothing. These can become entangled in moving parts and result in injury. Therefore, if you must run the engine while working under the hood, make certain that you remove all jewelry (especially rings, bracelets, watches, and necklaces) and all neckties, scarves, and similar loose clothing before getting near the engine or cooling fans.**

⚠ CAUTION

- ***Do not put heavy objects or apply excessive force on top of the engine cover (if equipped) or fuel related parts.***
- ***When you inspect the fuel system (fuel lines and fuel injection devices), we recommend that you contact an authorized HYUNDAI dealer.***
- ***Do not drive long time with the engine cover (if equipped) removed.***
- ***When checking the engine room, do not go near fire.***

  Fuel, washer fluid, etc. are flammable oils that may cause fire.
- ***Before touching the battery, ignition cables and electrical wiring, you should disconnect the battery "-" terminal. You may get an electric shock from the electric current.***
- ***When you remove the interior trim cover with a flat head (-) driver, be careful not to damage the cover.***
- ***Be careful when you replace and clean bulbs to avoid burns or electrical shock.***

OWNER MAINTENANCE

The following lists are vehicle checks and inspections that should be performed by the owner or an authorized HYUNDAI dealer at the frequencies indicated to help ensure safe, dependable operation of your vehicle.

Any adverse conditions should be brought to the attention of your dealer as soon as possible.

These Owner Maintenance Checks are generally not covered by warranties and you may be charged for labor, parts and lubricants used.

Owner maintenance schedule

When you stop for fuel:

- Check the engine oil level.
- Check coolant level in coolant reservoir.
- Check the windshield washer fluid level.
- Look for low or under-inflated tires.
- Check the radiator and condenser.

  Check if the front of the radiator and condenser are clean and not blocked with leaves, dirt or insects etc.

  If any of the above parts are extremely dirty or you are not sure of their condition, take your vehicle to an authorized HYUNDAI dealer.

⚠ WARNING

Be careful when checking your engine coolant level when the engine is hot. Scalding hot coolant and steam may blow out under pressure. This could cause burns or other serious injury.

While operating your vehicle:

- Note any changes in the sound of the exhaust or any smell of exhaust fumes in the vehicle.
- Check for vibrations in the steering wheel. Notice any increased steering effort or looseness in the steering wheel, or change in its straight-ahead position.
- Notice if your vehicle constantly turns slightly or “pulls” to one side when traveling on smooth, level road.
- When stopping, listen and check for unusual sounds, pulling to one side, increased brake pedal travel or “hard-to-push” brake pedal.
- If any slipping or changes in the operation of your transaxle occurs, check the transaxle fluid level.
- Check automatic transaxle P (Park) function.
- Check parking brake.
- Check for fluid leaks under your vehicle (water dripping from the air conditioning system during or after use is normal).

At least monthly:

- Check coolant level in the engine coolant reservoir.
- Check the operation of all exterior lights, including the stoplights, turn signals and hazard warning flashers.
- Check the inflation pressures of all tires including the spare.

At least twice a year (i.e., every Spring and Fall):

- Check radiator, heater and air conditioning hoses for leaks or damage.
- Check windshield washer spray and wiper operation. Clean wiper blades with clean cloth dampened with washer fluid.
- Check headlight alignment.
- Check muffler, exhaust pipes, shields and clamps.
- Check the lap/shoulder belts for wear and function.
- Check for worn tires and loose wheel lug nuts.

At least once a year:

- Clean body and door drain holes.
- Lubricate door hinges and checks, and hood hinges.
- Lubricate door and hood locks and latches.
- Lubricate door rubber weatherstrips.
- Check the air conditioning system.
- Check the power steering fluid level.
- Inspect and lubricate automatic transaxle linkage and controls.
- Clean battery and terminals.
- Check the brake fluid level.

SCHEDULED MAINTENANCE SERVICE

Follow Normal Maintenance Schedule if the vehicle is usually operated where none of the following conditions apply. If any of the following conditions apply, follow Maintenance Under Severe Usage Conditions.

- Repeated short distance driving.
- Driving in dusty conditions or sandy areas.
- Extensive use of brakes.
- Driving in areas where salt or other corrosive materials are being used.
- Driving on rough or muddy roads.
- Driving in mountainous areas.
- Extended periods of idling or low speed operation.
- Driving for a prolonged period in cold temperatures and/or extremely humid climates.
- More than 50% driving in heavy city traffic during hot weather above 32°C (90°F).

If your vehicle is operated under the above conditions, you should inspect, replace or refill more frequently than the following Normal Maintenance Schedule. After the periods or distance shown in the chart, continue to follow the prescribed maintenance intervals.

NORMAL MAINTENANCE SCHEDULE - EXCEPT EUROPE

The following maintenance services must be performed to ensure good emission control and performance. Keep receipts for all vehicle emission services to protect your warranty. Where both mileage and time are shown, the frequency of service is determined by whichever occurs first.

❈ Inspect : Inspect and if necessary, adjust, correct, clean or replace

*1 : Check the engine oil level and leak every 500 km (350 miles) or before starting a long trip.

*2 : Driving in summer season temperature over 40 °C (104 °F - SAUDI, UAE, OMAN, KUWAIT, BAHRAIN, QATAR, IRAN, YEMEN ETC) or driving over 170 km/h (106 mile/h) must conform the severe driving condition.

*3 : Adjust alternator and power steering (and water pump drive belt) and air conditioner drive belt (if equipped). Inspect and if necessary repair or replace.

*4 : The fuel filter is considered to be maintenance free but periodic inspection is recommended for this maintenance schedule depends on fuel quality. If there are some important matters like fuel flow restriction, surging, loss of power, hard starting problem etc, replace the fuel filter immediately regardless of maintenance schedule and consult an authorized HYUNDAI dealer for details.

*5 : For your convenience, it can be replaced prior to it's interval when you do maintenance of other items.

*6 : Inspect for excessive valve noise and/or engine vibration and adjust if necessary. An authorized HYUNDAI dealer should perform the operation.

*7 : When adding coolant, use only deionized water or soft water for your vehicle and never mix hard water in the coolant filled at the factory. An improper coolant mixture can result in serious malfunction or engine damage.

*8 : If good quality gasolines meet Europe Fuel standards (EN228) or equivalents including fuel additives is not available, one bottle of additive is recommended. Additives are available from your authorized HYUNDAI dealer along with information on how to use them. Do not mix other additives.

NORMAL MAINTENANCE SCHEDULE - EXCEPT EUROPE (CONT.)

15,000 km (10,000 miles) or 12months	30,000 km (20,000 miles) or 24months
❑ Inspect air cleaner filter - Except Middle East	❑ Inspect air cleaner filter - Except Middle East
❑ Inspect air conditioner refrigerant/compressor (if equipped)	❑ Inspect air conditioner refrigerant/compressor (if equipped)
❑ Inspect battery condition	❑ Inspect battery condition
❑ Inspect brake lines, hoses and connections	❑ Inspect brake lines, hoses and connections
❑ Inspect brake fluid	❑ Inspect brake fluid
❑ Inspect disc brakes and pads	❑ Inspect disc brakes and pads
❑ Inspect exhaust system	❑ Inspect drive belt *3
❑ Inspect front suspension ball joints	❑ Inspect drive shafts and boots
❑ Inspect parking brake	❑ Inspect exhaust system
❑ Inspect power steering fluid and hoses	❑ Inspect front suspension ball joints
❑ Inspect steering gear rack, linkage and boots	❑ Inspect fuel filter *4
❑ Inspect tire (pressure & tread wear)	❑ Inspect fuel tank air filter
❑ Replace air cleaner filter - For Middle East	❑ Inspect parking brake
❑ Replace climate control air filter (if equipped)	❑ Inspect power steering fluid and hoses
❑ Replace engine oil and filter - Except Middle East *1	❑ Inspect steering gear rack, linkage and boots
❑ Replace engine oil and filter - For Middle East *1 *2 (Every 10,000 km (6,500 miles) or 12months)	❑ Inspect tire (pressure & tread wear)
❑ Add fuel additives *8 (Every 5,000 km or 6months)	❑ Replace air cleaner filter - For Middle East
	❑ Replace climate control air filter (if equipped)
	❑ Replace engine oil and filter - Except Middle East *1

(Continued)

NORMAL MAINTENANCE SCHEDULE - EXCEPT EUROPE (CONT.)

(Continued)

- ❑ Replace engine oil and filter - For Middle East *1 *2
  (Every 10,000 km (6,500 miles) or 12months)
- ❑ Add fuel additives *8
  (Every 5,000 km or 6months)

45,000 km (30,000 miles) or 36months

- ❑ Inspect air conditioner refrigerant/compressor (if equipped)
- ❑ Inspect battery condition
- ❑ Inspect brake lines, hoses and connections
- ❑ Inspect brake fluid
- ❑ Inspect disc brakes and pads
- ❑ Inspect exhaust system
- ❑ Inspect front suspension ball joints
- ❑ Inspect parking brake
- ❑ Inspect power steering fluid and hoses
- ❑ Inspect steering gear rack, linkage and boots
- ❑ Inspect tire (pressure & tread wear)
- ❑ Replace air cleaner filter
- ❑ Replace climate control air filter (if equipped)
- ❑ Replace engine oil and filter - Except Middle East *1
- ❑ Replace engine oil and filter - For Middle East *1 *2
  (Every 10,000 km (6,500 miles) or 12months)
- ❑ Replace spark plug (2.4L) - Except Middle East
- ❑ Replace spark plug (2.4L) - For Middle East
  (Every 40,000 km (25,000 miles))
- ❑ Add fuel additives *8
  (Every 5,000 km or 6months)

NORMAL MAINTENANCE SCHEDULE - EXCEPT EUROPE (CONT.)

60,000 km (40,000 miles) or 48months

- ❑ Inspect air cleaner filter - Except Middle East
- ❑ Inspect air conditioner refrigerant/compressor (if equipped)
- ❑ Inspect battery condition
- ❑ Inspect brake lines, hoses and connections
- ❑ Inspect brake fluid
- ❑ Inspect cooling system
  (At first, 60,000 km (40,000 miles) or 48months
  after that, every 30,000 km (20,000 miles) or 24months)
- ❑ Inspect disc brakes and pads
- ❑ Inspect drive belt *3
- ❑ Inspect drive shafts and boots
- ❑ Inspect exhaust system
- ❑ Inspect front suspension ball joints
- ❑ Inspect fuel lines, hoses and connections
- ❑ Inspect parking brake
- ❑ Inspect power steering fluid and hoses
- ❑ Inspect steering gear rack, linkage and boots
- ❑ Inspect tire (pressure & tread wear)
- ❑ Inspect vapor hose and fuel filler cap
- ❑ Replace air cleaner filter - For Middle East
- ❑ Replace climate control air filter (if equipped)

(Continued)

(Continued)

- ❑ Replace engine oil and filter - Except Middle East *1
- ❑ Replace engine oil and filter - For Middle East *1 *2
  (Every 10,000 km (6,500 miles) or 12months)
- ❑ Replace fuel filter *4
- ❑ Replace fuel tank air filter
- ❑ Add fuel additives *8
  (Every 5,000 km or 6months)

NORMAL MAINTENANCE SCHEDULE - EXCEPT EUROPE (CONT.)

75,000 km (50,000 miles) or 60months

- ❑ Inspect air cleaner filter - Except Middle East
- ❑ Inspect air conditioner refrigerant/compressor (if equipped)
- ❑ Inspect battery condition
- ❑ Inspect brake lines, hoses and connections
- ❑ Inspect brake fluid
- ❑ Inspect disc brakes and pads
- ❑ Inspect exhaust system
- ❑ Inspect front suspension ball joints
- ❑ Inspect parking brake
- ❑ Inspect power steering fluid and hoses
- ❑ Inspect steering gear rack, linkage and boots
- ❑ Inspect tire (pressure & tread wear)
- ❑ Replace air cleaner filter - For Middle East
- ❑ Replace climate control air filter (if equipped)
- ❑ Replace engine oil and filter - Except Middle East *1
- ❑ Replace engine oil and filter - For Middle East *1 *2
  (Every 10,000 km (6,500 miles) or 12months)
- ❑ Add fuel additives *8
  (Every 5,000 km or 6months)

90,000 km (60,000 miles) or 72months

- ❑ Inspect air conditioner refrigerant/compressor (if equipped)
- ❑ Inspect battery condition
- ❑ Inspect brake lines, hoses and connections
- ❑ Inspect brake fluid
- ❑ Inspect cooling system
  (At first, 60,000 km (40,000 miles) or 48months
  after that, every 30,000 km (20,000 miles) or 24months)
- ❑ Inspect disc brakes and pads
- ❑ Inspect drive belt *3
- ❑ Inspect drive shafts and boots
- ❑ Inspect exhaust system
- ❑ Inspect front suspension ball joints
- ❑ Inspect fuel filter *4
- ❑ Inspect fuel tank air filter
- ❑ Inspect parking brake
- ❑ Inspect power steering fluid and hoses
- ❑ Inspect steering gear rack, linkage and boots
- ❑ Inspect tire (pressure & tread wear)
- ❑ Inspect valve clearance *5 *6
- ❑ Replace air cleaner filter
- ❑ Replace climate control air filter (if equipped)

(Continued)

NORMAL MAINTENANCE SCHEDULE - EXCEPT EUROPE (CONT.)

(Continued)

- ❑ Replace engine oil and filter
  - Except Middle East *1
- ❑ Replace engine oil and filter - For Middle East *1 *2
  (Every 10,000 km (6,500 miles) or 12months)
- ❑ Replace spark plug (2.4L) - Except Middle East
- ❑ Replace spark plug (2.4L) - For Middle East
  (Every 40,000 km (25,000 miles))
- ❑ Add fuel additives *8
  (Every 5,000 km or 6months)

105,000 km (70,000 miles) or 84months

- ❑ Inspect air cleaner filter - Except Middle East
- ❑ Inspect air conditioner refrigerant/compressor (if equipped)
- ❑ Inspect battery condition
- ❑ Inspect brake lines, hoses and connections
- ❑ Inspect brake fluid
- ❑ Inspect disc brakes and pads
- ❑ Inspect exhaust system
- ❑ Inspect front suspension ball joints
- ❑ Inspect parking brake
- ❑ Inspect power steering fluid and hoses
- ❑ Inspect steering gear rack, linkage and boots
- ❑ Inspect tire (pressure & tread wear)
- ❑ Replace air cleaner filter - For Middle East
- ❑ Replace climate control air filter (if equipped)
- ❑ Replace engine oil and filter - Except Middle East *1
- ❑ Replace engine oil and filter - For Middle East *1 *2
  (Every 10,000 km (6,500 miles) or 12months)
- ❑ Add fuel additives *8
  (Every 5,000 km or 6months)

NORMAL MAINTENANCE SCHEDULE - EXCEPT EUROPE (CONT.)

120,000 km (80,000 miles) or 96months

- ❑ Inspect air cleaner filter - Except Middle East
- ❑ Inspect air conditioner refrigerant/compressor (if equipped)
- ❑ Inspect battery condition
- ❑ Inspect brake lines, hoses and connections
- ❑ Inspect brake fluid
- ❑ Inspect cooling system
  (At first, 60,000 km (40,000 miles) or 48months
  after that, every 30,000 km (20,000 miles) or 24months)
- ❑ Inspect disc brakes and pads
- ❑ Inspect drive belt *3
- ❑ Inspect drive shafts and boots
- ❑ Inspect exhaust system
- ❑ Inspect front suspension ball joints
- ❑ Inspect fuel lines, hoses and connections
- ❑ Inspect parking brake
- ❑ Inspect power steering fluid and hoses
- ❑ Inspect steering gear rack, linkage and boots
- ❑ Inspect tire (pressure & tread wear)
- ❑ Inspect vapor hose and fuel filler cap

(Continued)

(Continued)

- ❑ Replace air cleaner filter - For Middle East
- ❑ Replace climate control air filter (if equipped)
- ❑ Replace engine oil and filter - Except Middle East *1
- ❑ Replace engine oil and filter - For Middle East *1 *2
  (Every 10,000 km (6,500 miles) or 12months)
- ❑ Replace fuel filter *4
- ❑ Replace fuel tank air filter
- ❑ Replace coolant *5 *7
  (At first, 210,000 km (120,000 miles) or 120months
  after that, every 30,000 km (20,000 miles) or 24months)
- ❑ Replace spark plug (3.0L) - Except Middle East
  (Every 165,000 km (100,000 miles))
- ❑ Replace spark plug (3.0L) - For Middle East
  (Every 160,000 km (100,000 miles))
- ❑ Add fuel additives *8
  (Every 5,000 km or 6months)

No check, No service required

- ❑ Automatic transaxle fluid

MAINTENANCE UNDER SEVERE USAGE CONDITIONS (EXCEPT EUROPE)

The following items must be serviced more frequently on cars mainly used under severe driving conditions.
Refer to the chart below for the appropriate maintenance intervals.
R : Replace I : Inspect and if necessary, adjust, correct, clean or replace

Maintenance item		Maintenance operation	Maintenance intervals	Driving condition
Engine oil and engine oil filter	For Middle East	R	Every 5,000 km (3,000 miles) or 6 months	A, B, C, D, E, F, G, H, I, K, L
	Except Middle East	R	Every 7,500 km (5,000 miles) or 6 months	
Air cleaner filter		R	Replace more frequently depending on the condition	C, E
Spark plugs		R	Replace more frequently depending on the condition	A, B, H, I, L
Automatic transaxle fluid		R	Every 100,000 km (62,000 miles)	A, C, F, G, I
Steering gear rack, linkage and boots		I	Inspect more frequently depending on the condition	C, D, E, F, G

Maintenance item	Maintenance operation	Maintenance intervals	Driving condition
Front suspension ball joints	I	Inspect more frequently depending on the condition	C, D, E, F, G
Disc brakes and pads, calipers and rotors	I	Inspect more frequently depending on the condition	C, D, E, G, H
Parking brake	I	Inspect more frequently depending on the condition	C, D, G, H
Driveshaft and boots	I	Inspect more frequently depending on the condition	C, D, E, F, G, H, I
Climate control air filter (if equipped)	R	Replace more frequently depending on the condition	C, E

Severe driving conditions

A : Repeatedly driving short distance of less than 8 km (5 miles) in normal temperature or less than 16 km (10 miles) in freezing temperature

B : Extensive engine idling or low speed driving for long distances

C : Driving on rough, dusty, muddy, unpaved, graveled or salt-spread roads

D : Driving in areas using salt or other corrosive materials or in very cold weather

E : Driving in sandy areas

F : More than 50 % driving in heavy city traffic during hot weather above 32°C (90°F)

G : Driving on uphill, downhill, or mountain roads

H : Towing a trailer (if equipped)

I : Driving for patrol car, taxi, commercial car or vehicle towing

J : Driving over 140 km/h (87 mile/h)

K : Driving over 170 km/h (106 mile/h)

L : Frequently driving in stop-and-go conditions

NORMAL MAINTENANCE SCHEDULE - FOR EUROPE

The following maintenance services must be performed to ensure good emission control and performance. Keep receipts for all vehicle emission services to protect your warranty. Where both mileage and time are shown, the frequency of service is determined by whichever occurs first.

❈ Inspect : Inspect and if necessary, adjust, correct, clean or replace

*1 : If good quality gasolines meet Europe Fuel standards (EN228) or equivalents including fuel additives is not available, one bottle of additive is recommended. Additives are available from your authorized HYUNDAI dealer along with information on how to use them. Do not mix other additives

*2 : Check the engine oil level and leak every 500 km (350 miles) or before starting a long trip.

*3 : Driving in summer season temperature over 40 °C (104 °F - SAUDI, UAE, OMAN, KUWAIT, BAHRAIN, QATAR, IRAN, YEMEN ETC) or driving over 170 km/h (106 mile/h) must conform the severe driving condition.

*4 : Adjust alternator and power steering (and water pump drive belt) and air conditioner drive belt (if equipped). Inspect and if necessary repair or replace.

*5 : The fuel filter is considered to be maintenance free but periodic inspection is recommended for this maintenance schedule depends on fuel quality. If there are some important matters like fuel flow restriction, surging, loss of power, hard starting problem etc, replace the fuel filter immediately regardless of maintenance schedule and consult an authorized HYUNDAI dealer for details.

*6 : For your convenience, it can be replaced prior to it's interval when you do maintenance of other items.

*7 : Inspect for excessive valve noise and/or engine vibration and adjust if necessary. An authorized HYUNDAI dealer should perform the operation.

*8 : When adding coolant, use only deionized water or soft water for your vehicle and never mix hard water in the coolant filled at the factory. An improper coolant mixture can result in serious malfunction or engine damage.

NORMAL MAINTENANCE SCHEDULE - FOR EUROPE (CONT.)

15,000 km (10,000 miles) or 12months
❑ Add fuel additives *1
❑ Inspect air cleaner filter
❑ Inspect air conditioner refrigerant/compressor (if equipped)
❑ Inspect battery condition
❑ Inspect brake lines, hoses and connections
❑ Inspect brake fluid
❑ Inspect disc brakes and pads
❑ Inspect exhaust system
❑ Inspect front suspension ball joints
❑ Inspect parking brake
❑ Inspect power steering fluid and hoses
❑ Inspect steering gear rack, linkage and boots
❑ Inspect tire (pressure & tread wear)
❑ Replace engine oil and filter *2

30,000 km (20,000 miles) or 24months
❑ Add fuel additives *1
❑ Inspect air cleaner filter
❑ Inspect air conditioner refrigerant/compressor (if equipped)
❑ Inspect battery condition
❑ Inspect brake lines, hoses and connections
❑ Inspect disc brakes and pads
❑ Inspect drive shafts and boots
❑ Inspect exhaust system
❑ Inspect front suspension ball joints
❑ Inspect parking brake
❑ Inspect power steering fluid and hoses
❑ Inspect steering gear rack, linkage and boots
❑ Inspect tire (pressure & tread wear)
❑ Replace brake fluid
❑ Replace climate control air filter (if equipped)
❑ Replace engine oil and filter *2

NORMAL MAINTENANCE SCHEDULE - FOR EUROPE (CONT.)

45,000 km (30,000 miles) or 36months

- ❑ Add fuel additives *1
- ❑ Inspect air conditioner refrigerant/compressor (if equipped)
- ❑ Inspect battery condition
- ❑ Inspect brake lines, hoses and connections
- ❑ Inspect brake fluid
- ❑ Inspect disc brakes and pads
- ❑ Inspect exhaust system
- ❑ Inspect front suspension ball joints
- ❑ Inspect parking brake
- ❑ Inspect power steering fluid and hoses
- ❑ Inspect steering gear rack, linkage and boots
- ❑ Inspect tire (pressure & tread wear)
- ❑ Replace air cleaner filter
- ❑ Replace engine oil and filter *2
- ❑ Replace spark plugs (2.4L)

60,000 km (40,000 miles) or 48months

- ❑ Add fuel additives *1
- ❑ Inspect air cleaner filter
- ❑ Inspect air conditioner refrigerant/compressor (if equipped)
- ❑ Inspect battery condition
- ❑ Inspect brake lines, hoses and connections
- ❑ Inspect cooling system
  (At first, 60,000 km (40,000 miles) or 48months
  after that, every 30,000 km (20,000 miles) or 24months)
- ❑ Inspect disc brakes and pads
- ❑ Inspect drive shafts and boots
- ❑ Inspect exhaust system
- ❑ Inspect front suspension ball joints
- ❑ Inspect fuel filter *5
- ❑ Inspect fuel lines, hoses and connections
- ❑ Inspect fuel tank air filter
- ❑ Inspect parking brake
- ❑ Inspect power steering fluid and hoses
- ❑ Inspect steering gear rack, linkage and boots
- ❑ Inspect tire (pressure & tread wear)
- ❑ Inspect vapor hose and fuel filler cap (Gasoline)
- ❑ Replace brake fluid

(Continued)

NORMAL MAINTENANCE SCHEDULE - FOR EUROPE (CONT.)

(Continued)

- ❑ Replace climate control air filter (if equipped)
- ❑ Replace engine oil and filter *2

75,000 km (50,000 miles) or 60months

- ❑ Add fuel additives *1
- ❑ Inspect air cleaner filter
- ❑ Inspect air conditioner refrigerant/compressor (if equipped)
- ❑ Inspect battery condition
- ❑ Inspect brake lines, hoses and connections
- ❑ Inspect brake fluid
- ❑ Inspect disc brakes and pads
- ❑ Inspect exhaust system
- ❑ Inspect front suspension ball joints
- ❑ Inspect parking brake
- ❑ Inspect power steering fluid and hoses
- ❑ Inspect steering gear rack, linkage and boots
- ❑ Inspect tire (pressure & tread wear)
- ❑ Replace engine oil and filter *2

NORMAL MAINTENANCE SCHEDULE - FOR EUROPE (CONT.)

90,000 km (60,000 miles) or 72months	105,000 km (70,000 miles) or 84months
❑ Add fuel additives *1	❑ Add fuel additives *1
❑ Inspect air conditioner refrigerant/compressor (if equipped)	❑ Inspect air cleaner filter
❑ Inspect battery condition	❑ Inspect air conditioner refrigerant/compressor (if equipped)
❑ Inspect brake lines, hoses and connections	❑ Inspect battery condition
❑ Inspect cooling system (At first, 60,000 km (40,000 miles) or 48months after that, every 30,000 km (20,000 miles) or 24months)	❑ Inspect brake lines, hoses and connections
❑ Inspect disc brakes and pads	❑ Inspect brake fluid
❑ Inspect drive belt *4 (At first, 90,000 km (60,000 miles) or 72months after that, every 30,000 km (20,000 miles) or 24months)	❑ Inspect disc brakes and pads
❑ Inspect drive shafts and boots	❑ Inspect exhaust system
❑ Inspect exhaust system	❑ Inspect front suspension ball joints
❑ Inspect front suspension ball joints	❑ Inspect parking brake
❑ Inspect parking brake	❑ Inspect power steering fluid and hoses
❑ Inspect power steering fluid and hoses	❑ Inspect steering gear rack, linkage and boots
❑ Inspect steering gear rack, linkage and boots	❑ Inspect tire (pressure & tread wear)
❑ Inspect tire (pressure & tread wear)	❑ Replace engine oil and filter *2
❑ Inspect valve clearance *6 *7	
❑ Replace air cleaner filter	
❑ Replace brake fluid	
❑ Replace climate control air filter (if equipped)	
❑ Replace engine oil and filter *2	

NORMAL MAINTENANCE SCHEDULE - FOR EUROPE (CONT.)

120,000 km (80,000 miles) or 96months

- ❑ Add fuel additives *1
- ❑ Inspect air cleaner filter
- ❑ Inspect air conditioner refrigerant/compressor (if equipped)
- ❑ Inspect battery condition
- ❑ Inspect brake lines, hoses and connections
- ❑ Inspect cooling system
  (At first, 60,000 km (40,000 miles) or 48months
  after that, every 30,000 km (20,000 miles) or 24months)
- ❑ Inspect disc brakes and pads
- ❑ Inspect drive belt *4
  (At first, 90,000 km (60,000 miles) or 72months
  after that, every 30,000 km (20,000 miles) or 24months)
- ❑ Inspect drive shafts and boots
- ❑ Inspect exhaust system
- ❑ Inspect front suspension ball joints
- ❑ Inspect fuel filter *5
- ❑ Inspect fuel lines, hoses and connections
- ❑ Inspect fuel tank air filter
- ❑ Inspect parking brake
- ❑ Inspect power steering fluid and hoses

(Continued)

(Continued)

- ❑ Inspect steering gear rack, linkage and boots
- ❑ Inspect tire (pressure & tread wear)
- ❑ Inspect vapor hose and fuel filler cap
- ❑ Inspect vacuum hose
- ❑ Replace brake fluid
- ❑ Replace climate control air filter (if equipped)
- ❑ Replace engine oil and filter *2
- ❑ Replace coolant *6 *8
  (At first, 210,000 km (120,000 miles) or 120months
  after that, every 30,000 km (25,000 miles) or 24months)
- ❑ Replace spark plug (3.0L)
  (Every 165,000 km (100,000 miles))

No check, No service required

- ❑ Automatic transaxle fluid

MAINTENANCE UNDER SEVERE USAGE CONDITIONS (FOR EUROPE)

The following items must be serviced more frequently on cars mainly used under severe driving conditions.
Refer to the chart below for the appropriate maintenance intervals.
R : Replace I : Inspect and if necessary, adjust, correct, clean or replace

Maintenance item	Maintenance operation	Maintenance intervals	Driving condition
Engine oil and engine oil filter	R	Every 7,500 km (4,500 miles) or 6 months	A, B, C, D, E, F, G, H, I, K, L
Air cleaner filter	R	Replace more frequently depending on the condition	C, E
Spark plugs	R	Replace more frequently depending on the condition	A, B, H, I, L
Automatic transaxle fluid	R	Every 90,000 km (60,000 miles)	A, C, F, G, I
Steering gear rack, linkage and boots	I	Inspect more frequently depending on the condition	C, D, E, F, G

Maintenance item	Maintenance operation	Maintenance intervals	Driving condition
Front suspension ball joints	I	Inspect more frequently depending on the condition	C, D, E, F, G
Disc brakes and pads, calipers and rotors	I	Inspect more frequently depending on the condition	C, D, E, G, H
Parking brake	I	Inspect more frequently depending on the condition	C, D, G, H
Driveshaft and boots	I	Inspect more frequently depending on the condition	C, D, E, F, G, H, I
Climate control air filter (if equipped)	R	Replace more frequently depending on the condition	C, E

Severe driving conditions

A : Repeatedly driving short distance of less than 8 km (5 miles) in normal temperature or less than 16 km (10 miles) in freezing temperature

B : Extensive engine idling or low speed driving for long distances

C : Driving on rough, dusty, muddy, unpaved, graveled or salt-spread roads

D : Driving in areas using salt or other corrosive materials or in very cold weather

E : Driving in sandy areas

F : More than 50 % driving in heavy city traffic during hot weather above 32°C (90°F)

G : Driving on uphill, downhill, or mountain roads

H : Towing a trailer (if equipped)

I : Driving for patrol car, taxi, commercial car or vehicle towing

J : Driving over 140 km/h (87 mile/h)

K : Driving over 170 km/h (106 mile/h)

L : Frequently driving in stop-and-go conditions

EXPLANATION OF SCHEDULED MAINTENANCE ITEMS

Engine oil and filter

The engine oil and filter should be changed at the intervals specified in the maintenance schedule. If the car is being driven in severe conditions, more frequent oil and filter changes are required.

Drive belts

Inspect all drive belts for evidence of cuts, cracks, excessive wear or oil saturation and replace if necessary. Drive belts should be checked periodically for proper tension and adjusted as necessary.

⚠ CAUTION

When you are inspecting the belt, place the ignition switch in the LOCK/OFF or ACC position.

Fuel filter

A clogged filter can limit the speed at which the vehicle may be driven, damage the emission system and cause multiple issues such as hard starting. If an excessive amount of foreign matter accumulates in the fuel tank, the filter may require replacement more frequently.

After installing a new filter, run the engine for several minutes, and check for leaks at the connections. Fuel filters should be installed by an authorized HYUNDAI dealer.

Fuel lines, fuel hoses and connections

Check the fuel lines, fuel hoses and connections for leakage and damage. Have an authorized HYUNDAI dealer replace any damaged or leaking parts immediately.

Vapor hose and fuel filler cap

The vapor hose and fuel filler cap should be inspected at those intervals specified in the maintenance schedule. Make sure that a new vapor hose or fuel filler cap is correctly replaced.

Vacuum crankcase ventilation hoses (if equipped)

Inspect the surface of hoses for evidence of heat and/or mechanical damage. Hard and brittle rubber, cracking, tears, cuts, abrasions, and excessive swelling indicate deterioration. Particular attention should be paid to examine those hose surfaces nearest to high heat sources, such as the exhaust manifold.

Inspect the hose routing to assure that the hoses do not come in contact with any heat source, sharp edges or moving component which might cause heat damage or mechanical wear. Inspect all hose connections, such as clamps and couplings, to make sure they are secure, and that no leaks are present. Hoses should be replaced immediately if there is any evidence of deterioration or damage.

Air cleaner filter

A Genuine HYUNDAI air cleaner filter is recommended when the filter is replaced.

Spark plugs

Make sure to install new spark plugs of the correct heat range.

⚠ WARNING

Do not disconnect and inspect spark plugs when the engine is hot. You may burn yourself.

Valve clearance

Inspect excessive valve noise and/or engine vibration and adjust if necessary. An authorized HYUNDAI dealer should perform the operation.

Cooling system

Check cooling system components, such as radiator, coolant reservoir, hoses and connections for leakage and damage. Replace any damaged parts.

Coolant

The coolant should be changed at the intervals specified in the maintenance schedule.

Automatic transaxle fluid

Automatic transaxle fluid should not be checked under normal usage conditions. But in severe conditions, the fluid should be changed at an authorized HYUNDAI dealer in accordance to the scheduled maintenance at the beginning of this chapter.

✻ NOTICE

Automatic transaxle fluid color is basically red.
As the vehicle is driven, the automatic transaxle fluid will begin to look darker. It is normal condition and you should not judge the need to replace the fluid based upon the changed color.

⚠ CAUTION

The use of a non-specified fluid could result in transaxle malfunction and failure.

Use only specified automatic transaxle fluid. (Refer to "Recommended lubricants and capacities" in section 8.)

Brake hoses and lines

Visually check for proper installation, chafing, cracks, deterioration and any leakage. Replace any deteriorated or damaged parts immediately.

Brake fluid

Check brake fluid level in the brake fluid reservoir. The level should be between “MIN” and “MAX” marks on the side of the reservoir. Use only hydraulic brake fluid conforming to DOT 3 or DOT 4 specification.

Parking brake

Inspect the parking brake system including the parking brake pedal or lever and cables.

Brake discs, pads, calipers and rotors

Check the pads for excessive wear, discs for run out and wear, and calipers for fluid leakage.

For more information on checking the pads or lining wear limit, refer to the Hyundai web site.

(**http://brakemanual.hmc.co.kr**)

Suspension mounting bolts

Check the suspension connections for looseness or damage. Retighten to the specified torque.

Steering gear box, linkage & boots/lower arm ball joint

With the vehicle stopped and engine off, check for excessive free-play in the steering wheel.

Check the linkage for bends or damage. Check the dust boots and ball joints for deterioration, cracks, or damage. Replace any damaged parts.

Power steering pump, belt and hoses

Check the power steering pump and hoses for leakage and damage. Replace any damaged or leaking parts immediately. Inspect the power steering belt (or drive belt) for evidence of cuts, cracks, excessive wear, oiliness and proper tension. Replace or adjust it if necessary.

Drive shafts and boots

Check the drive shafts, boots and clamps for cracks, deterioration, or damage. Replace any damaged parts and, if necessary, repack the grease.

Air conditioning refrigerant (if equipped)

Check the air conditioning lines and connections for leakage and damage.

ENGINE OIL

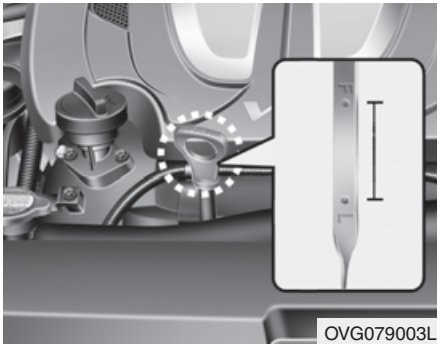

OVG079003L

Checking the engine oil level

1. Be sure the vehicle is on level ground.
2. Start the engine and allow it to reach normal operating temperature.
3. Turn the engine off and wait for a few minutes (about 5 minutes) for the oil to return to the oil pan.
4. Pull the dipstick out, wipe it clean, and re-insert it fully.

⚠ WARNING - Radiator hose

Be very careful not to touch the radiator hose when checking or adding the engine oil as it may be hot enough to burn you.

5. Pull the dipstick out again and check the level. The level should be between F (Full) and L (Low).

⚠ CAUTION

- ***Do not overfill with engine oil. Engine damage may result.***
- ***Do not spill engine oil, when adding or changing engine oil. If you drop the engine oil on the engine room, wipe it off immediately.***
- ***When you wipe the oil level gauge, you should wipe it with a clean cloth. When mixed with debris, it can cause engine damage.***

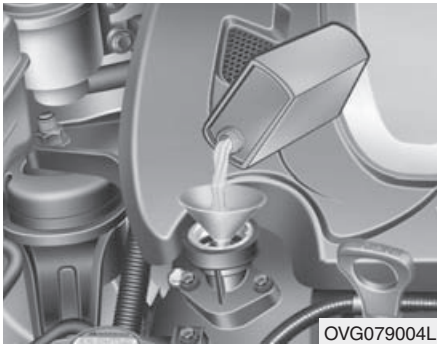
OVG079004L

If it is near or at L (Low), add enough oil to bring the level to F (Full). **Do not overfill.**

Use a funnel to help prevent oil from being spilled on engine components.

Use only the specified engine oil. (Refer to “Recommended lubricants and capacities” in section 8.)

Changing the engine oil and filter

Have engine oil and filter changed by an authorized HYUNDAI dealer according to the Maintenance Schedule at the beginning of this section.

⚠ WARNING

Used engine oil may cause irritation or cancer of the skin if left in contact with the skin for prolonged periods of time. Used engine oil contains chemicals that have caused cancer in laboratory animals. Always protect your skin by washing your hands thoroughly with soap and warm water as soon as possible after handling used oil.

ENGINE COOLANT

The high-pressure cooling system has a reservoir filled with year-round antifreeze coolant. The reservoir is filled at the factory.

Check the antifreeze protection and coolant level at least once a year, at the beginning of the winter season, and before traveling to a colder climate.

⚠ CAUTION

- ***When the engine overheats from low engine coolant, suddenly adding engine coolant may cause cracks in the engine. To prevent damage, add engine coolant slowly in small quantities.***
- ***Do not drive with no engine coolant. It may cause water pump failure and engine seizure, etc.***

Checking the coolant level

⚠ WARNING

Removing radiator cap

- **Never attempt to remove the radiator cap while the engine is operating or hot. Doing so might lead to cooling system and engine damage and could result in serious personal injury from escaping hot coolant or steam.**
- **Turn the engine off and wait until it cools down. Use extreme care when removing the radiator cap. Wrap a thick towel around it, and turn it counterclockwise slowly to the first stop. Step back while the pressure is released from the cooling system. When you are sure all the pressure has been released, press down on the cap, using a thick towel, and continue turning counterclockwise to remove it.**

(Continued)

(Continued)

- **Even if the engine is not operating, do not remove the radiator cap or the drain plug while the engine and radiator are hot. Hot coolant and steam may still blow out under pressure, causing serious injury.**

⚠ WARNING

The electric motor (cooling fan) is controlled by engine coolant temperature, refrigerant pressure and vehicle speed. It may sometimes operate even when the engine is not running. Use extreme caution when working near the blades of the cooling fan so that you are not injured by a rotating fan blades. As the engine coolant temperature decreases, the electric motor will automatically shut off. This is a normal condition.

If your vehicle is equipped with GDI, the electric motor (cooling fan) may operate until you disconnect the negative battery cable.

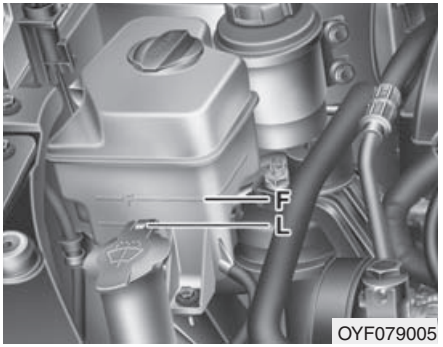

OYF079005

Check the condition and connections of all cooling system hoses and heater hoses. Replace any swollen or deteriorated hoses.

The coolant level should be filled between F (Full) and L (Low) marks on the side of the coolant reservoir when the engine is cool.

If the coolant level is low, add enough specified coolant to provide protection against freezing and corrosion. Bring the level to F (Full), but do not overfill. If frequent additions are required, see an authorized HYUNDAI dealer for a cooling system inspection.

Recommended engine coolant

- When adding coolant, use only deionized water or soft water for your vehicle and never mix hard water in the coolant filled at the factory. An improper coolant mixture can result in serious malfunction or engine damage.
- The engine in your vehicle has aluminum engine parts and must be protected by an ethylene-glycol-based coolant to prevent corrosion and freezing.
- DO NOT USE alcohol or methanol coolant or mix them with the specified coolant.
- Do not use a solution that contains more than 60% antifreeze or less than 35% antifreeze, which would reduce the effectiveness of the solution.

For mixture percentage, refer to the following table.

Ambient Temperature	Mixture Percentage (volume)	
	Antifreeze	Water
-15°C (5°F)	35	65
-25°C (-13°F)	40	60
-35°C (-31°F)	50	50
-45°C (-49°F)	60	40

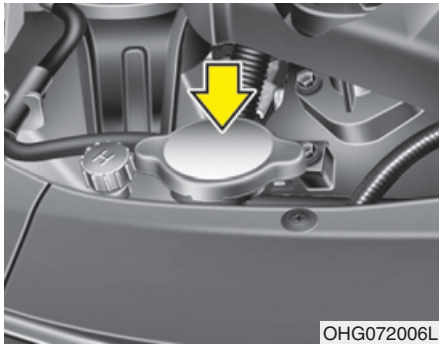
OHG072006L

⚠ WARNING

Radiator cap

Do not remove the radiator cap when the engine and radiator are hot. Scalding hot coolant and steam may blow out under pressure causing serious injury.

Changing the coolant

Have coolant changed by an authorized HYUNDAI dealer according to the Maintenance Schedule at the beginning of this section.

⚠ CAUTION

Put a thick cloth around the radiator cap before refilling the coolant in order to prevent the coolant from overflowing into engine parts such as the generator.

⚠ WARNING - Coolant

- **Do not use radiator coolant or antifreeze in the washer fluid reservoir.**
- **Radiator coolant can severely obscure visibility when sprayed on the windshield and may cause loss of vehicle control or damage to paint and body trim.**

BRAKE FLUID

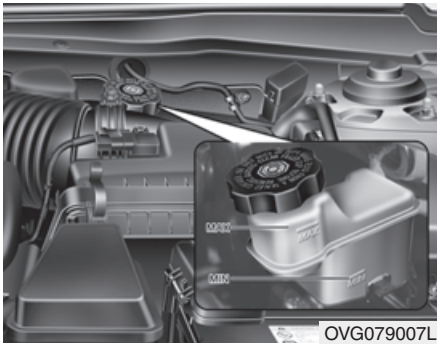

OVG079007L

Checking the brake fluid level

Check the fluid level in the reservoir periodically. The fluid level should be between MAX (Maximum) and MIN (Minimum) marks on the side of the reservoir.

Before removing the reservoir cap and adding brake fluid, clean the area around the reservoir cap thoroughly to prevent brake fluid contamination.

If the level is low, add fluid to the MAX (Maximum) level. The level will fall with accumulated mileage. This is a normal condition associated with the wear of the brake linings. If the fluid level is excessively low, have the brake system checked by an authorized HYUNDAI dealer.

Use only the specified brake fluid. (Refer to "Recommended lubricants or capacities" in section 8.)

Never mix different types of fluid.

⚠ WARNING - Loss of brake fluid

In the event the brake system requires frequent additions of fluid, the vehicle should be inspected by an authorized HYUNDAI dealer.

✻ NOTICE

Before removing the brake filler cap, read the warning on the cap.

⚠ WARNING

Clean filler cap before removing. Use only DOT3 or DOT4 brake fluid from a sealed container.

⚠ WARNING - Brake fluid

When changing and adding brake fluid, handle it carefully. Do not let it come in contact with your eyes. If brake fluid should come in contact with your eyes, immediately flush them with a large quantity of fresh tap water. Have your eyes examined by a doctor as soon as possible.

⚠ CAUTION

Do not allow brake fluid to contact the vehicle's body paint, as paint damage will result. Brake fluid, which has been exposed to open air for an extended time should never be used as its quality cannot be guaranteed. It should be disposed of properly. Don't put in the wrong kind of fluid. A few drops of mineral-based oil, such as engine oil, in your brake system can damage brake system parts.

POWER STEERING FLUID (IF EQUIPPED)

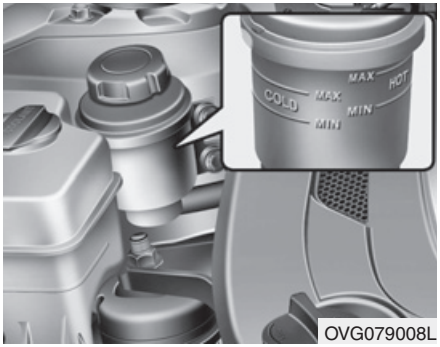

OVG079008L

Checking the power steering fluid level

With the vehicle on level ground, check the fluid level in the power steering reservoir periodically. The fluid should be between MAX (Maximum) and MIN (Minimum) marks on the side of the gauge at the normal temperature.

Before adding power steering fluid, thoroughly clean the area around the reservoir cap to prevent power steering fluid contamination.

If the level is low, add fluid to the MAX (Maximum) level.

✻ NOTICE

Check that the fluid level is in the "HOT" range on the gauge. If the fluid is cold, check that it is in the "COLD" range.

In the event the power steering system requires frequent addition of fluid, the vehicle should be inspected by an authorized HYUNDAI dealer.

⚠ CAUTION

- ***To avoid damage to the power steering pump, do not operate the vehicle for prolonged periods with a low power steering fluid level.***
- ***Never start the engine when the reservoir tank is empty.***
- ***When adding fluid, be careful that dirt does not get into the tank.***
- ***Too little fluid can result in increased steering effort and/or noise from the power steering system.***
- ***The use of the non-specified fluid could reduce the effectiveness of the power steering system and cause damage to it.***

Use only the specified power steering fluid. (Refer to "Recommended lubricants or capacities" in section 8.)

Checking the power steering hose

Check the connections for oil leaks, damage and twists in the power steering hose before driving.

WASHER FLUID

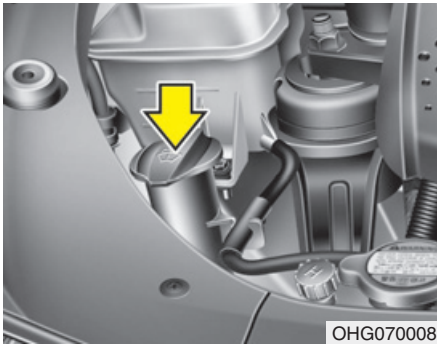
OHG070008

Checking the washer fluid level

The reservoir is translucent so that you can check the level with a quick visual inspection.

Check the fluid level in the washer fluid reservoir and add fluid if necessary. Plain water may be used if washer fluid is not available. However, use washer solvent with antifreeze characteristics in cold climates to prevent freezing.

⚠ WARNING - Coolant

- **Do not use radiator coolant or antifreeze in the washer fluid reservoir.**
- **Radiator coolant can severely obscure visibility when sprayed on the windshield and may cause loss of vehicle control or damage to paint and body trim.**
- **Windshield Washer fluid agents contain some amounts of alcohol and can be flammable under certain circumstances. Do not allow sparks or flame to contact the washer fluid or the washer fluid reservoir. Damage to the vehicle or occupants could occur.**
- **Windshield washer fluid is poisonous to humans and animals. Do not drink and avoid contacting windshield washer fluid. Serious injury or death could occur.**

PARKING BRAKE

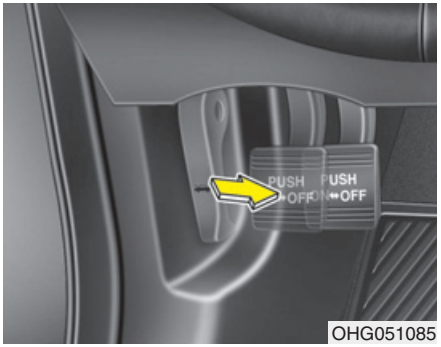

OHG051085

Checking the parking brake

Check whether the stroke is within specification when the parking brake pedal is depressed with 30 kg (66 lb, 294N) of force. Also, the parking brake alone should securely hold the vehicle on a fairly steep grade. If the stroke is more or less than specified, have the parking brake adjusted by an authorized HYUNDAI dealer.

Stroke : 5 notch

AIR CLEANER

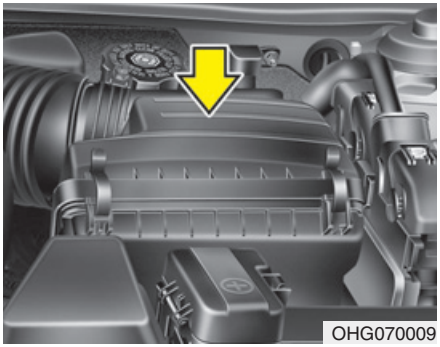
OHG070009

Filter replacement

It must be replaced when necessary, and should not be washed.

You can clean the filter when inspecting the air cleaner element.

Clean the filter by using compressed air.

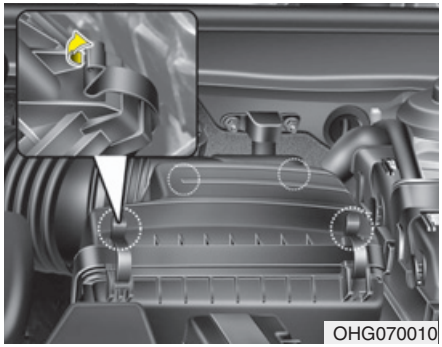
OHG070010

1. Loosen the air cleaner cover attaching clips and open the cover.

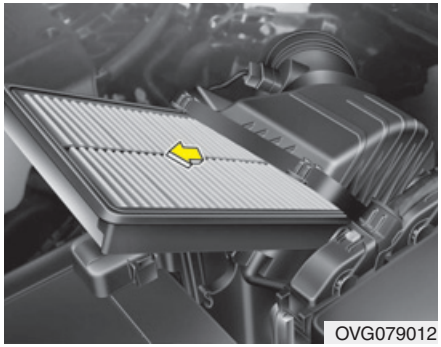
OVG079012

2. Wipe the inside of the air cleaner.
3. Replace the air cleaner filter.
4. Lock the cover with the cover attaching clips.

Replace the filter according to the Maintenance Schedule.

If the vehicle is operated in extremely dusty or sandy areas, replace the element more often than the usual recommended intervals. (Refer to "Maintenance under severe usage conditions" in this section.)

⚠ CAUTION

- ***Do not drive with the air cleaner removed; this will result in excessive engine wear.***
- ***When removing the air cleaner filter, be careful that dust or dirt does not enter the air intake, or damage may result.***
- ***Use a HYUNDAI genuine part. Use of non-genuine parts could damage the air flow sensor.***

CLIMATE CONTROL AIR FILTER (IF EQUIPPED)

Filter inspection

If the vehicle is operated in the severely air-polluted cities or on dusty rough roads for a long period, it should be inspected more frequently and replaced earlier. When you, the owner, replace the climate control air filter, replace it performing the following procedure, and be careful to avoid damaging other components.

Replace the filter according to the maintenance Schedule.

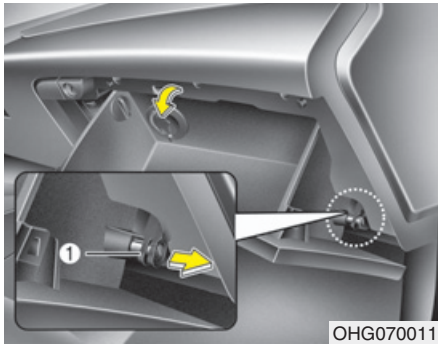

OHG070011

Filter replacement

1. Open the glove box and remove the support strap (1).

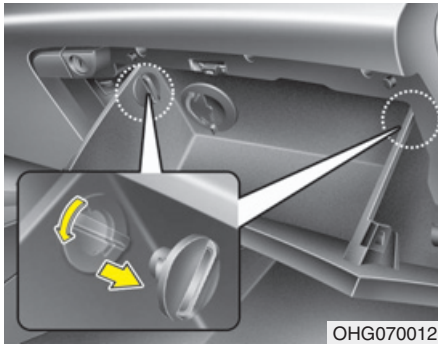
OHG070012

2. With the glove box open, remove the stoppers by turning them counter-clockwise on both sides.

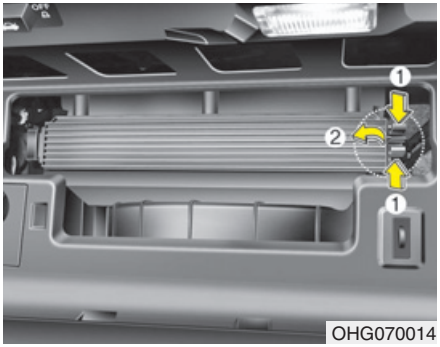

OHG070014

3. Remove the climate control air filter cover while pressing the lock on the right side of the cover.

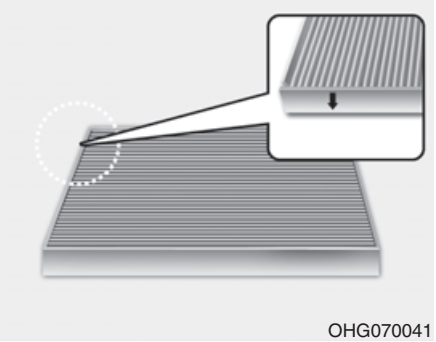
OHG070041

4. Replace the climate control air filter.
5. Reassemble in the reverse order of disassembly.

✻ NOTICE

When replacing the climate control air filter install it properly. Otherwise, the system may produce noise and the effectiveness of the filter may be reduced.

WIPER BLADES

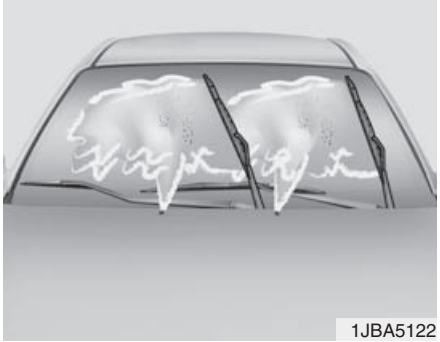
1JBA5122

Blade inspection

✻ NOTICE

Commercial hot waxes applied by automatic car washes have been known to make the windshield difficult to clean.

Contamination of either the windshield or the wiper blades with foreign matter can reduce the effectiveness of the windshield wipers. Common sources of contamination are insects, tree sap, and hot wax treatments used by some commercial car washes. If the blades are not wiping properly, clean both the window and the blades with a good cleaner or mild detergent, and rinse thoroughly with clean water.

⚠ CAUTION

To prevent damage to the wiper blades, do not use gasoline, kerosene, paint thinner, or other solvents on or near them.

Blade replacement

When the wipers no longer clean adequately, the blades may be worn or cracked, and require replacement.

⚠ CAUTION

To prevent damage to the wiper arms or other components, do not attempt to move the wipers manually.

⚠ CAUTION

The use of a non-specified wiper blade could result in wiper malfunction and failure.

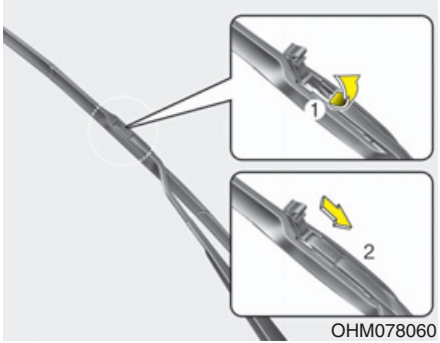

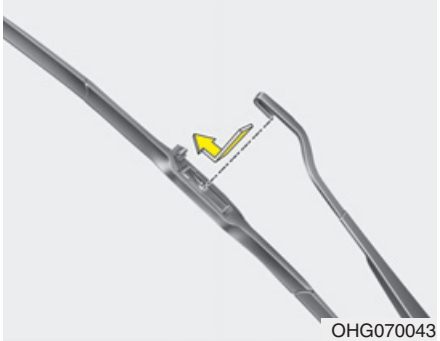

Front windshield wiper blade

1. Raise the wiper arm.

⚠ CAUTION

Do not allow the wiper arm to fall against the windshield, since it may chip or crack the windshield.

2. Lift up the wiper blade clip. Then pull down the blade assembly and remove it.
3. Install the new blade assembly in the reverse order of removal.

BATTERY

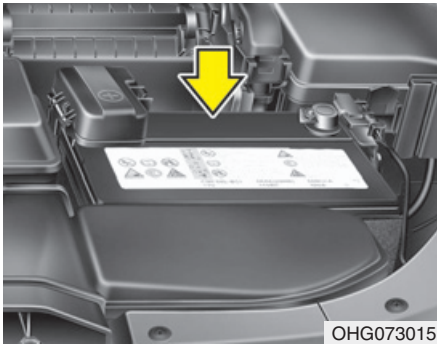
OHG073015

For best battery service

- Keep the battery securely mounted.
- Keep the battery top clean and dry.
- Keep the terminals and connections clean, tight, and coated with petroleum jelly or terminal grease.
- Rinse any spilled electrolyte from the battery immediately with a solution of water and baking soda.
- If the vehicle is not going to be used for an extended time, disconnect the battery cables.

✻ NOTICE

Basically equipped battery is maintenance free type. If your vehicle is equipped with the battery marked with LOWER and UPPER on the side, you can check the electrolyte level. The electrolyte level should be between LOWER and UPPER. If the electrolyte level is low, it needs to add distilled (demineralized) water (Never add sulfuric acid or other electrolyte). When refill, be careful not to splash the battery and adjacent components. And do not overfill the battery cells. It can cause corrosion on other parts. After then ensure that tighten the cell caps. We recommend that you contact an authorized HYUNDAI dealer.

⚠ WARNING - Battery dangers

Always read the following instructions carefully when handling a battery.

Keep lighted cigarettes and all other flames or sparks away from the battery.

(Continued)

(Continued)

Hydrogen, a highly combustible gas, is always present in battery cells and may explode if ignited.

Keep batteries out of the reach of children because batteries contain highly corrosive SULFURIC ACID. Do not allow battery acid to contact your skin, eyes, clothing or paint finish.

If any electrolyte gets into your eyes, flush your eyes with clean water for at least 15 minutes and get immediate medical attention.

If electrolyte gets on your skin, thoroughly wash the contacted area. If you feel a pain or a burning sensation, get medical attention immediately.

Wear eye protection when charging or working near a battery. Always provide ventilation when working in an enclosed space.

(Continued)

(Continued)

An inappropriately disposed battery can be harmful to the environment and human health. Dispose the battery according to your local law(s) or regulation.

The battery contains lead. Do not dispose of it after use. Please return the battery to an authorized HYUNDAI dealer to be recycled.

- **When lifting a plastic-cased battery, excessive pressure on the case may cause battery acid to leak, resulting in personal injury. Lift with a battery carrier or with your hands on opposite corners.**
- **Never attempt to recharge the battery when the battery cables are connected.**
- **The electrical ignition system works with high voltage. Never touch these components with the engine running or the ignition switched on.**

Failure to follow the above warnings can result in serious bodily injury or death.

⚠ CAUTION

- ***When you don't use the vehicle for a long time in the low temperature area, separate the battery and keep it indoors.***
- ***Always charge the battery fully to prevent the battery case damaged in low temperature area.***
- ***If you connect unauthorized electronic devices to the battery, the battery may be discharged. Never use unauthorized devices.***

⚠ WARNING

Separating the battery from the vehicle should be done in an authorized HYUNDAI dealer.

■ Example

OJD072039

❊ The actual battery label in the vehicle may differ from the illustration.

Battery capacity label

1. CMF60L-BCI : The HYUNDAI model name of battery
2. 12V : The nominal voltage
3. 60Ah(20HR) : The nominal capacity (in Ampere hours)
4. 92RC : The nominal reserve capacity (in min.)
5. 550CCA : The cold-test current in amperes by SAE
6. 440A : The cold-test current in amperes by EN

Battery recharging

Your vehicle has a maintenance-free, calcium-based battery.

- If the battery becomes discharged in a short time (because, for example, the headlights or interior lights were left on while the vehicle was not in use), recharge it by slow charging (trickle) for 10 hours.
- If the battery gradually discharges because of high electric load while the vehicle is being used, recharge it at 20-30A for two hours.

⚠ WARNING - Recharging battery

When recharging the battery, observe the following precautions:

- **The battery must be removed from the vehicle and placed in an area with good ventilation.**
- **Do not allow cigarettes, sparks, or flame near the battery.**
- **Watch the battery during charging, and stop or reduce the charging rate if the battery cells begin gassing (boiling) violently or if the temperature of the electrolyte of any cell exceeds 49°C (120°F).**

(Continued)

(Continued)

- **Wear eye protection when checking the battery during charging.**
- **Disconnect the battery charger in the following order.**

1. **Turn off the battery charger main switch.**
2. **Unhook the negative clamp from the negative battery terminal.**
3. **Unhook the positive clamp from the positive battery terminal.**

⚠ WARNING

- **Before performing maintenance or recharging the battery, turn off all accessories and stop the engine.**
- **The negative battery cable must be removed first and installed last when the battery is disconnected.**
- **Operation related to the battery should be done in an authorized HYUNDAI dealer.**

⚠ CAUTION

- ***Keep the battery away from water or any liquid.***
- ***For your safety, use the authenticity by approved authorized HYUNDAI dealer, when you replace the battery.***

Reset items

Items should be reset after the battery has been discharged or the battery has been disconnected.

- Auto up/down window (See section 4)
- Sunroof (See section 4)
- Driver position memory system (See section 4)
- Trip computer (See section 4)
- Climate control system (See section 4)
- Clock (See section 4)
- Audio (See section 4)

TIRES AND WHEELS

Tire care

For proper maintenance, safety, and maximum fuel economy, you must always maintain recommended tire inflation pressures and stay within the load limits and weight distribution recommended for your vehicle.

Recommended cold tire inflation pressures

All tire pressures (including the spare) should be checked when the tires are cold. “Cold Tires” means the vehicle has not been driven for at least three hours or driven less than 1.6 km (one mile).

Recommended pressures must be maintained for the best ride, top vehicle handling, and minimum tire wear.

For recommended inflation pressure, refer to “Tire and wheels” in section 8.

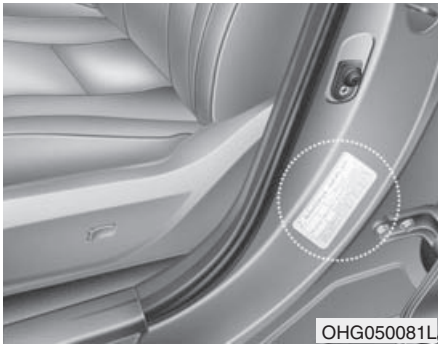

All specifications (sizes and pressures) can be found on a label attached to the vehicle.

⚠ WARNING - Tire underinflation

Severe underinflation can lead to severe heat build-up, causing blowouts, tread separation and other tire failures that can result in the loss of vehicle control leading to severe injury or death. This risk is much higher on hot days and when driving for long periods at high speeds.

⚠ CAUTION

- ***Underinflation also results in excessive wear, poor handling and reduced fuel economy. Wheel deformation also is possible. Keep your tire pressures at the proper levels. If a tire frequently needs refilling, have it checked by an authorized HYUNDAI dealer.***
- ***Overinflation produces a harsh ride, excessive wear at the center of the tire tread, and a greater possibility of damage from road hazards.***

⚠ CAUTION

- ***Warm tires normally exceed recommended cold tire pressures by 28 to 41 kPa (4 to 6 psi). Do not release air from warm tires to adjust the pressure or the tires will be underinflated.***
- ***Be sure to reinstall the tire inflation valve caps. Without the valve cap, dirt or moisture could get into the valve core and cause air leakage. If a valve cap is missing, install a new one as soon as possible.***

⚠ WARNING - Tire Inflation

Overinflation or underinflation can reduce tire life, adversely affect vehicle handling, and lead to sudden tire failure. This could result in loss of vehicle control and potential injury.

⚠ CAUTION - Tire pressure

Always observe the following:

- ***Check tire pressure when the tires are cold. (After vehicle has been parked for at least three hours or hasn't been driven more than 1.6 km (one mile) since startup.)***
- ***Check the pressure of your spare tire each time you check the pressure of other tires.***
- ***Never overload your vehicle. Be careful not to overload a vehicle luggage rack if your vehicle is equipped with one.***
- ***Worn, old tires can cause accidents. If your tread is badly worn, or if your tires have been damaged, replace them.***

Checking tire inflation pressure

Check your tires once a month or more.

Also, check the tire pressure of the spare tire.

How to check

Use a good quality gage to check tire pressure. You can not tell if your tires are properly inflated simply by looking at them. Radial tires may look properly inflated even when they're underinflated.

Check the tire's inflation pressure when the tires are cold. - "Cold" means your vehicle has been sitting for at least three hours or driven no more than 1.6 km (1 mile).

Remove the valve cap from the tire valve stem. Press the tire gage firmly onto the valve to get a pressure measurement. If the cold tire inflation pressure matches the recommended pressure on the tire and loading information label, no further adjustment is necessary. If the pressure is low, add air until you reach the recommended amount.

If you overfill the tire, release air by pushing on the metal stem in the center of the tire valve. Recheck the tire pressure with the tire gage. Be sure to put the valve caps back on the valve stems. They help prevent leaks by keeping out dirt and moisture.

⚠ WARNING

- **Inspect your tires frequently for proper inflation as well as wear and damage. Always use a tire pressure gauge.**
- **Tires with too much or too little pressure wear unevenly causing poor handling, loss of vehicle control, and sudden tire failure leading to accidents, injuries, and even death. The recommended cold tire pressure for your vehicle can be found in this manual and on the tire label located on the driver's side center pillar.**
- **Worn tires can cause accidents. Replace tires that are worn, show uneven wear, or are damaged.**
- **Remember to check the pressure of your spare tire. HYUNDAI recommends that you check the spare every time you check the pressure of the other tires on your vehicle.**

Tire rotation

To equalize tread wear, it is recommended that the tires be rotated every 12,000 km (7,500 miles) or sooner if irregular wear develops.

During rotation, check the tires for correct balance.

When rotating tires, check for uneven wear and damage. Abnormal wear is usually caused by incorrect tire pressure, improper wheel alignment, out-of-balance wheels, severe braking or severe cornering. Look for bumps or bulges in the tread or side of tire. Replace the tire if you find either of these conditions. Replace the tire if fabric or cord is visible. After rotation, be sure to bring the front and rear tire pressures to specification and check lug nut tightness.

With a full-size spare tire (if equipped)

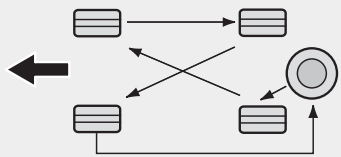

S2BLA790

Without a spare tire

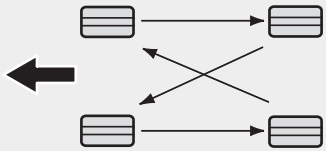

S2BLA790A

Directional tires (if equipped)

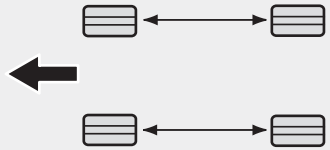

CBGQ0707A

Disc brake pads should be inspected for wear whenever tires are rotated.

✻ NOTICE

Rotate radial tires that have an asymmetric tread pattern only from front to rear and not from right to left.

⚠ WARNING

- **Do not use the compact spare tire for tire rotation.**
- **Do not mix bias ply and radial ply tires under any circumstances. This may cause unusual handling characteristics that could result in death, severe injury, or property damage.**

Wheel alignment and tire balance

The wheels on your vehicle were aligned and balanced carefully at the factory to give you the longest tire life and best overall performance.

In most cases, you will not need to have your wheels aligned again. However, if you notice unusual tire wear or your vehicle pulling one way or the other, the alignment may need to be reset.

If you notice your vehicle vibrating when driving on a smooth road, your wheels may need to be rebalanced.

⚠ CAUTION

Improper wheel weights can damage your vehicle's aluminum wheels. Use only approved wheel weights.

Tire replacement

If the tire is worn evenly, a tread wear indicator will appear as a solid band across the tread. This shows there is less than 1.6 mm (1/16 inch) of tread left on the tire. Replace the tire when this happens.

Do not wait for the band to appear across the entire tread before replacing the tire.

⚠ CAUTION

When replacing the tires, recheck and tighten the wheel nuts after driving about 1,000 km (620 miles). If the steering wheel shakes or the vehicle vibrates while driving, the tire is out of balance. Align the tire balance. If the problem is not solved, we recommend that you contact an authorized HYUNDAI dealer.

⚠ WARNING - Replacing tires

- **Driving on worn-out tires is very hazardous and will reduce braking effectiveness, steering accuracy, and traction.**
- **Your vehicle is equipped with tires designed to provide for safe ride and handling capability. Do not use a size and type of tire and wheel that is different from the one that is originally installed on your vehicle.**

(Continued)

(Continued)

It can affect the safety and performance of your vehicle, which could lead to handling failure or rollover and serious injury. When replacing the tires, be sure to equip all four tires with the tire and wheel of the same size, type, tread, brand and load-carrying capacity.

- **The use of any other tire size or type may seriously affect ride, handling, ground clearance, stopping distance, body to tire clearance, snow tire clearance, and speedometer reliability.**
- **It is best to replace all four tires at the same time. If that is not possible, or necessary, then replace the two front or two rear tires as a pair. Replacing just one tire can seriously affect your vehicle's handling.**

(Continued)

(Continued)

- **The ABS works by comparing the speed of the wheels. Tire size can affect wheel speed. When replacing tires, all 4 tires must use the same size originally supplied with the vehicle. Using tires of a different size can cause the ABS (Anti-lock Brake System) and ESP (Electronic Stability Program) (if equipped) to work irregularly.**

Wheel replacement

When replacing the metal wheels for any reason, make sure the new wheels are equivalent to the original factory units in diameter, rim width and offset.

⚠ WARNING

A wheel that is not the correct size may adversely affect wheel and bearing life, braking and stopping abilities, handling characteristics, ground clearance, body-to-tire clearance, snow chain clearance, speedometer and odometer calibration, headlight aim and bumper height.

Tire traction

Tire traction can be reduced if you drive on worn tires, tires that are improperly inflated or on slippery road surfaces. Tires should be replaced when tread wear indicators appear. To reduce the possibility of losing control, slow down whenever there is rain, snow or ice on the road.

Tire maintenance

In addition to proper inflation, correct wheel alignment helps to decrease tire wear. If you find a tire is worn unevenly, have your dealer check the wheel alignment.

When you have new tires installed, make sure they are balanced. This will increase vehicle ride comfort and tire life. Additionally, a tire should always be rebalanced if it is removed from the wheel.

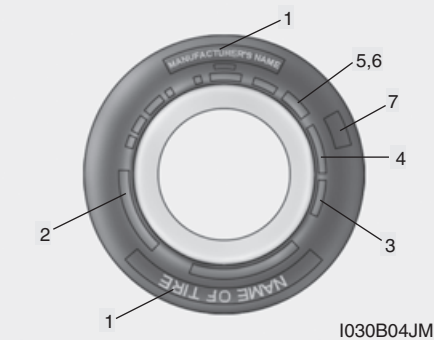

Tire sidewall labeling

This information identifies and describes the fundamental characteristics of the tire and also provides the tire identification number (TIN) for safety standard certification. The TIN can be used to identify the tire in case of a recall.

1. Manufacturer or brand name

Manufacturer or Brand name is shown.

2. Tire size designation

A tire's sidewall is marked with a tire size designation. You will need this information when selecting replacement tires for your car. The following explains what the letters and numbers in the tire size designation mean.

Example tire size designation:

(These numbers are provided as an example only; your tire size designator could vary depending on your vehicle.)

225/55R17 97V

225 - Tire width in millimeters.

55 - Aspect ratio. The tire's section height as a percentage of its width.

R - Tire construction code (Radial).

17 - Rim diameter in inches.

97 - Load Index, a numerical code associated with the maximum load the tire can carry.

V - Speed Rating Symbol. See the speed rating chart in this section for additional information.

Wheel size designation

Wheels are also marked with important information that you need if you ever have to replace one. The following explains what the letters and numbers in the wheel size designation mean.

Example wheel size designation:

7.0JX17

7.0 - Rim width in inches.

J - Rim contour designation.

17 - Rim diameter in inches.

Tire speed ratings

The chart below lists many of the different speed ratings currently being used for passenger car tires. The speed rating is part of the tire size designation on the sidewall of the tire. This symbol corresponds to that tire's designed maximum safe operating speed.

Speed Rating Symbol	Maximum Speed
S	180 km/h (112 mph)
T	190 km/h (118 mph)
H	210 km/h (130 mph)
V	240 km/h (149 mph)
Z	Above 240 km/h (149 mph)

3. Checking tire life (TIN : Tire Identification Number)

Any tires that are over 6 years old, based on the manufacturing date, (including the spare tire) should be replaced by new ones. You can find the manufacturing date on the tire sidewall (possibly on the inside of the wheel), displaying the DOT Code. The DOT Code is a series of numbers on a tire consisting of numbers and English letters. The manufacturing date is designated by the last four digits (characters) of the DOT code.

DOT : XXXX XXXX OOOO

The front part of the DOT means a plant code number, tire size and tread pattern and the last four numbers indicate week and year manufactured.

For example:

DOT XXXX XXXX 1614 represents that the tire was produced in the 16th week of 2014.

⚠ WARNING - Tire age

Tires degrade over time, even when they are not being used.

Regardless of the remaining tread, it is recommended that tires generally be replaced after six (6) years of normal service. Heat caused by hot climates or frequent high loading conditions can accelerate the aging process. Failure to follow this warning can result in sudden tire failure, which could lead to a loss of control and an accident involving serious injury or death.

4. Tire ply composition and material

The number of layers or plies of rubber-coated fabric in the tire. Tire manufacturers also must indicate the materials in the tire, which include steel, nylon, polyester, and others. The letter "R" means radial ply construction; the letter "D" means diagonal or bias ply construction; and the letter "B" means belted-bias ply construction.

5. Maximum permissible inflation pressure

This number is the greatest amount of air pressure that should be put in the tire. Do not exceed the maximum permissible inflation pressure. Refer to the Tire and Loading Information label for recommended inflation pressure.

6. Maximum load rating

This number indicates the maximum load in kilograms and pounds that can be carried by the tire. When replacing the tires on the vehicle, always use a tire that has the same load rating as the factory installed tire.

7. Uniform tire quality grading

Quality grades can be found where applicable on the tire sidewall between tread shoulder and maximum section width.

For example:

TREADWEAR 200

TRACTION AA

TEMPERATURE A

Tread wear

The tread wear grade is a comparative rating based on the wear rate of the tire when tested under controlled conditions on a specified government test course. For example, a tire graded 150 would wear one-and-a-half times (1½) as well on the government course as a tire graded 100.

The relative performance of tires depends upon the actual conditions of their use, however, and may depart significantly from the norm due to variations in driving habits, service practices and differences in road characteristics and climate.

These grades are molded on the side-walls of passenger vehicle tires. The tires available as standard or optional equipment on your vehicle may vary with respect to grade.

Traction - AA, A, B & C

The traction grades, from highest to lowest, are AA, A, B and C. Those grades represent the tire's ability to stop on wet pavement as measured under controlled conditions on specified government test surfaces of asphalt and concrete. A tire marked C may have poor traction performance.

⚠ WARNING

The traction grade assigned to this tire is based on straight-ahead braking traction tests, and does not include acceleration, cornering, hydroplaning, or peak traction characteristics.

Temperature -A, B & C

The temperature grades are A (the highest), B, and C, representing the tire's resistance to the generation of heat and its ability to dissipate heat when tested under controlled conditions on a specified indoor laboratory test wheel. Sustained high temperature can cause the material of the tire to degenerate and reduce tire life, and excessive temperature can lead to sudden tire failure. Grades B and A represent higher levels of performance on the laboratory test wheel than the minimum required by law.

⚠ WARNING - Tire temperature

The temperature grade for this tire is established for a tire that is properly inflated and not overloaded. Excessive speed, underinflation, or excessive loading, either separately or in combination, can cause heat build-up and possible sudden tire failure. This can cause loss of vehicle control and serious injury or death.

Low aspect ratio tire (if equipped)

Low aspect ratio tires, whose aspect ratio is lower than 50, are provided for sporty looks.

Because the low aspect ratio tires are optimized for handling and braking, it may be more uncomfortable to ride in and there is more noise compare with normal tires.

⚠ CAUTION

Because the sidewall of the low aspect ratio tire is shorter than the normal, the wheel and tire of the low aspect ratio tire is easier to be damaged. So, follow the instructions below.

- ***When driving on a rough road or off road, drive cautiously because tires and wheels may be damaged. And after driving, inspect tires and wheels.***
- ***When passing over a pothole, speed bump, manhole, or curb stone, drive slowly so that the tires and wheels are not damaged.***

(Continued)

(Continued)

- ***If the tire is impacted, we recommend that you inspect the tire condition or contact an authorized HYUNDAI dealer.***
- ***To prevent damage to the tire, inspect the tire condition and pressure every 3,000km.***

⚠ CAUTION

- ***It is not easy to recognize the tire damage with your own eyes. But if there is the slightest hint of tire damage, even though you cannot see the tire damage with your own eyes, have the tire checked or replaced because the tire damage may cause air leakage from the tire.***
- ***If the tire is damaged by driving on a rough road, off road, pothole, manhole, or curb stone, it will not be covered by the warranty.***
- ***You can find out the tire information on the tire sidewall.***

FUSES

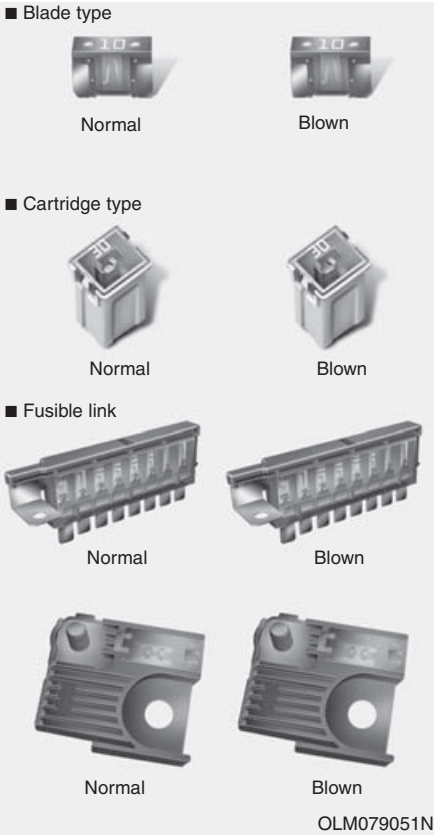

A vehicle's electrical system is protected from electrical overload damage by fuses.

This vehicle has 2 fuse panels, one located in the driver's side panel bolster, another is in the engine compartment.

If any of your vehicle's lights, accessories, or controls do not work, check the appropriate circuit fuse. If a fuse has blown, the element inside the fuse will be melted.

If the electrical system does not work, first check the driver's side fuse panel.

Before replacing a blown fuse, disconnect the negative battery cable.

Always replace a blown fuse with one of the same rating.

If the replacement fuse blows, this indicates an electrical problem. Avoid using the system involved and immediately consult an authorized HYUNDAI dealer.

Three kinds of fuses are used: blade type for lower amperage rating, cartridge type, and multi fuse for higher amperage ratings.

⚠ WARNING - Fuse replacement

- **Never replace a fuse with anything but another fuse of the same rating.**
- **A higher capacity fuse could cause damage and possibly a fire.**
- **Never install a wire or aluminum foil instead of the proper fuse - even as a temporary repair. It may cause extensive wiring damage and a possible fire.**

⚠ CAUTION

Do not use a screwdriver or any other metal object to remove fuses because it may cause a short circuit and damage the system.

✻ NOTICE

The actual fuse/relay panel label may differ from equipped items.

⚠ **CAUTION**

- ***When replacing a blown fuse or relay with a new one, make sure the new fuse or relay fits tightly into the clips The incomplete fastening fuse or relay may cause the vehicle wiring and electric systems damage and a possible fire.***
- ***Do not remove fuses, relays and terminals fastened with bolts or nuts. The fuses, relays and terminals may be fastened incompletely, and it may cause a possible fire. If fuses, relays and terminals fastened with bolts or nuts are blown, we recommend that you consult with an authorized HYUNDAI dealer.***
- ***Do not input any other objects except fuses or relays into fuse/relay terminals such as a driver or wiring. It may cause contact failure and system malfunction.***

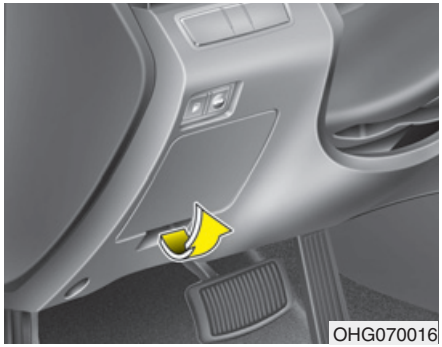
OHG070016

Instrument panel fuse replacement

1. Turn the ignition switch and all other switches off.
2. Open the fuse panel cover.

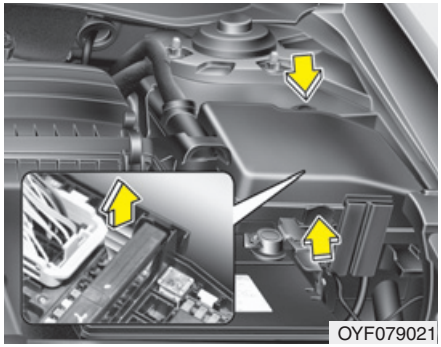
OYF079021

3. Pull the suspected fuse straight out. Use the removal tool provided in the engine compartment fuse panel.
4. Check the removed fuse; replace it if it is blown.
5. Push in a new fuse of the same rating, and make sure it fits tightly in the clips.

If it fits loosely, consult an authorized HYUNDAI dealer.

If you do not have a spare, use a fuse of the same rating from a circuit you may not need for operating the vehicle, such as the cigarette lighter fuse.

If the headlights or other electrical components do not work and the fuses are OK, check the fuse panel in the engine compartment. If a fuse is blown, it must be replaced.

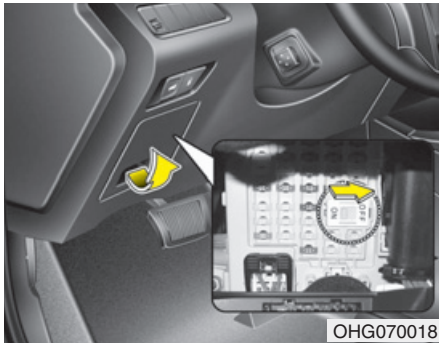
OHG070018

Fuse switch

Always, put the fuse switch at the ON position.

If you move the switch to the OFF position, some items such as audio and digital clock must be reset and transmitter (or smart key) may not work properly.

⚠ CAUTION

Always place the fuse switch in the ON position while driving the vehicle.

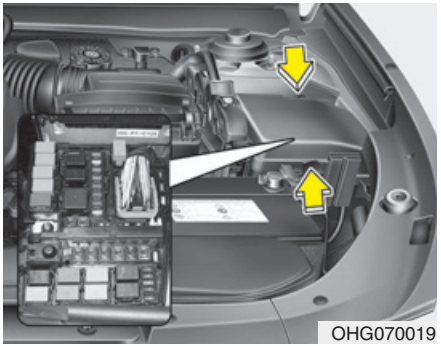
OHG070019

Engine compartment fuse replacement

1. Turn the ignition switch and all other switches off.
2. Remove the fuse panel cover by pressing the tab and pulling up.
3. Check the removed fuse; replace it if it is blown. To remove or insert the fuse, use the fuse puller in the engine compartment fuse panel.
4. Push in a new fuse of the same rating, and make sure it fits tightly in the clips. If it fits loosely, consult an authorized HYUNDAI dealer.

⚠ CAUTION

After checking the fuse panel in the engine compartment, securely install the fuse panel cover. If not, electrical failures may occur from water contact.

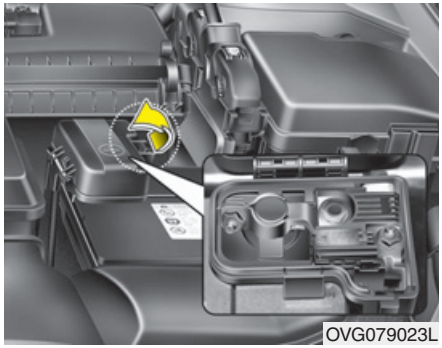
OVG079023L

Main fuse

If the main fuse is blown, it must be removed as follows:

1. Turn off the engine.
2. Disconnect the negative battery cable.
3. Remove the nuts shown in the picture above.
4. Replace the fuse with a new one of the same rating.
5. Reinstall in the reverse order of removal.

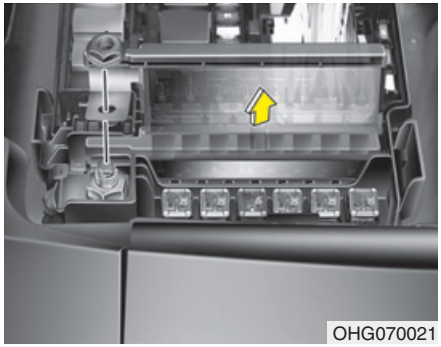
OHG070021

Multi fuse

If the multi fuse is blown, it must be removed as follows:

1. Turn off the engine.
2. Disconnect the negative battery cable.
3. Remove the fuse panel in the engine compartment.
4. Remove the nuts shown in the picture above.
5. Replace the fuse with a new one of the same rating.
6. Reinstall in the reverse order of removal.

✻ NOTICE

If the multi fuse is blown, consult an authorized HYUNDAI dealer.

Fuse/relay panel description

Inside the fuse/relay panel covers, you can find the fuse/relay label describing fuse/relay name and capacity.

Instrument panel fuse panel

Engine compartment fuse panel

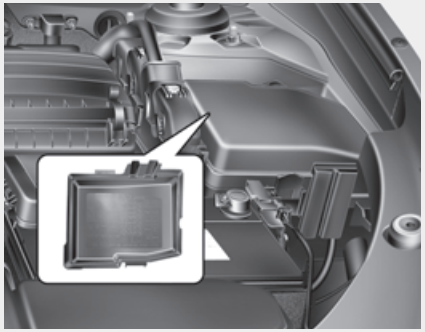

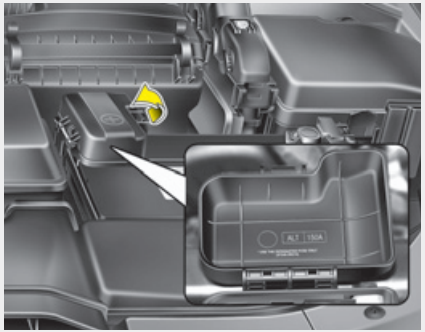

OHG070022/OHG070023/OHG070024

✻ NOTICE

Not all fuse panel descriptions in this manual may be applicable to your vehicle. It is accurate at the time of printing. When you inspect the fuse panel in your vehicle, refer to the fuse panel label.

Instrument panel (Driver's side fuse panel)

No.	Fuse rating	Symbol	Protected component
F1	7.5A		Immobilizer Module, Smart Key Control Module
F2	7.5A	IND	Instrument Cluster
F3	20A	SPARE 1	-
F4	10A	AUDIO	AMP, MAP Lamp, Front Monitor, E/R Fuse & Relay Box(RLY.13), A/V & Navigation Head Unit, Smart Key Control Module, Audio
F5	7.5A	MODULE 2	ABS/ESP Control Module, Steering Angle Sensor, Rear Seat Warmer LH/RH, A/C Control Module, Active Incar Sensor, Driver IMS Module, Front/Rear Parking Assist, Sensor LH/RH/LH (Center)/RH (Center)
F6	10A	MODULE 1	Console Switch LH, Driver/Passenger Seat Warmer Module, Driver/Passenger Door Module, Stop Lamp Switch, Driver/Passenger CCS Control Module, Smart Cruise Control Radar, E/R Fuse & Relay Box(RLY. 6), Instrument Cluster, Crash Pad Switch, Multifunction Switch, Head Lamp Leveling Device Actuator LH/RH, Auto Head Lamp Leveling Device Module, Electronic Parking Brake Module, Electro Chromic Mirror, ATM Lever Indicator, Tire Pressure Monitoring Module, Steering Tilt&Telescopic Module
F7	10A		Driver/Passenger Power Outside Mirror, A/C Control Module
F9	20A		Center Tray Outlet, Rear Power Outlet #2
F10	15A		SRS Control Module, A/C Control Module
F11	7.5A	MODULE 3	Panorama Sunroof, Instrument Cluster, Rain Sensor, Smart Key Control Module, ICM Relay Box (Head Lamp Washer Relay), Rear Seat Warmer LH/RH

No.	Fuse rating	Symbol	Protected component
F12	7.5A		A/C Control Module, E/R Fuse & Relay (RLY.14), Cluster Ionizer, Driver/Passenger Seat Warmer Module, Driver/Passenger CCS Control Module
F13	10A	HTD STRG	Steering Wheel Heater
F14	20A	IGN 1	E/R Fuse & Relay Box (F11, F12, F13)
F15	20A	SPARE 2	-
F16	10A	MEMORY 1	Data Link Connector, A/C Control Module, Driver/Passenger Door Module, Instrument Cluster, Tire Pressure Monitoring Module, Auto Light & Photo Sensor
F17	10A	INTERIOR	Cup Holder Lamp, Rear Door Lamp LH/RH, MAP Lamp, Driver/Passenger Door Mood Lamp, Driver/Passenger Door Lamp, Driver/Passenger Foot Lamp, Driver/Passenger Door Scuff Lamp, Rear Door Mood Lamp LH/RH, Vanity Lamp Switch LH/RH, Rear Door Scuff Lamp LH/RH, Trunk Room Lamp, Center Tray Lamp, Garnish Lamp LH/RH, Rear Personal Lamp Center/LH/RH
F18	25A		Wiper Motor, E/R Fuse & Relay Box (RLY. 8, RLY. 11, RLY. 12)
F19	10A	STOP LP	Immobilizer Module, Smart Key Control Module, Stop Lamp Switch, Start Stop Button Switch
F20	15A		ICM Relay Box (Rear Fog Lamp Relay)
F21	7.5A	MEMORY 2	RF Receiver
F22	10A	MULTI MEDIA	Front Monitor, Audio, A/V & Navigation Head Unit
F23	7.5A		Transaxle Range Switch, PCM, ICM Relay Box (Burglar Alarm Relay)

No.	Fuse rating	Symbol	Protected component
F24	20A	RH	Power Seat Relay Box RH, Passenger Reclining Limit Switch
F25	20A		Panorama Sunroof
F26	10A		Trunk Lid Relay, Fuel Filler Door & Trunk Lid Switch
F27	20A	RR	Rear Seat Warmer LH/RH
F28	10A	LH	Driver Massage Module
F29	25A	LH	Driver Safety Window Module, Rear Power Window Switch LH
F30	25A	AMP	AMP
F31	25A	SPARE 5	-
F32	25A	RH	Passenger Safety Window Module, Rear Power Window Switch RH
F33	25A	SPARE 4	-
F34	25A	SMART KEY 1	Smart Key Control Module
F35	15A	P/ HANDLE	Key Solenoid, Sport Mode Switch, Steering Tilt & Telescopic Module
F36	20A	FRT	Driver/Passenger Seat Warmer Module, Driver/Passenger CCS Control Module
F37	20A		Door Lock/Unlock Relay

Engine compartment main fuse panel

No.		Fuse rating	Symbol	Protected component
MULTI FUSE	F1	60A	IP B+2	Smart Junction Box (Fuse - F20/F25/F28/F35, IPS 1, IPS 2, ARISU-LT 1)
	F2	60A	IP B+3	Smart Junction Box (Fuse - F26/F29/F32/F36)
	F3	40A	IGN1	W/O Smart Key - Ignition Switch With Smart Key - RLY. 2 (PDM 1 (ACC) Relay), LY. 9 (PDM 2 (IG1) Relay)
	F4	40A	1 (ABS)	ESP Control Module, ABS Control Module
	F5	40A	RR HTD	RLY. 1 (RR HTD Relay)
	F6	40A		RLY. 14 (Blower Relay)
	F7	60A	IP B+4	Smart Junction Box (Fuse - F19/F24/F27/F30, IPS 3, IPS 4, ARISU-LT 2)
	F8	80A	MDPS	-
FUSE	F9	10A		A/C Control Module
	F10	10A	B/UP LP	Rear Combination Lamp (IN) LH/RH, Electro Chromic Mirror , A/V & Navigation Head Unit
	F11	15A	IGN 1	Transaxle Range Switch
	F12	10A	4	PCM
	F13	10A	5	Multipurpose Check Connector

No.		Fuse rating	Symbol	Protected component
FUSE	F14	25A	SPARE	-
	F15	30A	EPB 2	Electronic Parking Brake Module
	F16	40A	IGN 2	RLY. 5 (S tart Relay), W/O Smart Key - Ignition Switch, With Smart Key - RLY. 10 (PDM 3 (IG2) Relay)
	F17	30A	EPB 1	Electronic Parking Brake Module
	F18	40A		EMS Box (Fuse - F36 / F37 / F38 / F39)
	F19	40A		ESP Control Module, ABS Control Module
	F20	50A		RLY. 3 (C/F an (HI) Relay), RLY. 4 (C/F an (LO) Relay)
	F22	20A	DIAGNOSIS	Multipurpose Check Connector
	F23	25A	POWER OUTLET	RLY. 13 (P/Outlet Relay)
	F24	10A	AMS	Battery Sensor
	F25	10A		Smart Cruise Control Radar
	F26	15A	STOP LP	RLY. 6 (Stop LP Relay), Stop Signal Relay
	F27	20A		RLY. 7 (Deicer Relay)

No.		Fuse rating	Symbol	Protected component
FUSE	F28	20A		ICM Relay Box (Head Lamp Washer Relay)
	F29	30A	LH	Driver Lumbar Support Limit Switch(W/O Massage), Driver IMS Module, Power Seat Relay Box LH, Driver Reclining Limit Switch
	F30	40A	IP B+1	Smart Junction Box (Fuse - F37/F34, Leak Current Autocut Device (Leak Current Autocut Relay, Leak Current Autocut Switch, IPS 5)), E/R Fuse & Relay Box (Fuse - F22)

Engine compartment main fuse panel (2.4L)

No.	Fuse rating	Symbol	Protected component
F31	20A	IGN COIL	Ignition Coil #1~#4, Condenser
F32	10A	/ SENSOR2	Camshaft Position Sensor #1/#2, Oil Control Valve #1/#2, E/R Fuse & Relay Box (LY. 3 : C/FAN (HI) Relay)
F33	10A	2	-
F34	10A	INJECTOR	EMS Box (RLY. 1 : Fuel Pump Relay), Injector #1~#4
F35	15A	/ SENSOR1	Crankshaft Position Sensor, Oxygen Sensor(UP/DOWN), Purge Control Solenoid Valve, PCM, Variable Intake Solenoid Valve
F36	15A	3	PCM
F37	20A	F/PUMP	EMS Box (RLY. 1 : Fuel Pump Relay)
F38	15A		EMS Box (RLY. 2 : Horn Relay), ICM Relay Box(Burglar Horn Relay)
F39	30A	1	EMS Box (RLY. 3 : Engine Control Relay)

Engine compartment main fuse panel (3.0L)

No.	Fuse rating	Symbol	Protected component
F31	20A	IGN COIL	Ignition Coil #1~#6, Condenser #1/#2
F32	10A	/ SENSOR2	Camshaft Position Sensor #1~#4, E/R Fuse & Relay Box (RLY. 3 : C/FAN (HI) Relay)
F33	10A	2	-
F34	10A	INJECTOR	EMS Box (RLY. 1 : Fuel Pump Relay), Injector #1 ~ #6
F35	15A	/ SENSOR1	Oxygen Sensor #1~#4, Purge Control Solenoid Valve, Variable Intake Solenoid Valve, Oil Control Valve #1~#4, PCM
F36	15A	3	PCM
F37	20A	F/PUMP	EMS Box (RLY. 1 : Fuel Pump Relay)
F38	15A		EMS Box (RLY. 2 : Horn Relay), ICM Relay Box(Burglar Horn Relay)
F39	30A	1	EMS Box (RLY. 3 : Engine Control Relay)

LIGHT BULBS

⚠ WARNING - Working on the lights

Prior to working on the light, firmly apply the parking brake, ensure that the ignition switch is turned to the LOCK position and turn off the lights to avoid sudden movement of the vehicle and burning your fingers or receiving an electric shock.

Use only the bulbs of the specified wattage.

⚠ CAUTION

Be sure to replace the burned-out bulb with one of the same wattage rating. Otherwise, it may cause damage to the fuse or electric wiring system.

⚠ CAUTION

If you don't have necessary tools, the correct bulbs and the expertise, consult an authorized HYUNDAI dealer. In many cases, it is difficult to replace vehicle light bulbs because other parts of the vehicle must be removed before you can get to the bulb. This is especially true if you have to remove the headlight assembly to get to the bulb(s). Removing/installing the headlight assembly can result in damage to the vehicle.

✻ NOTICE

After driving in heavy rain or washing the vehicle, headlight and taillight lenses could appear frosty. This condition is caused by the temperature difference between the lamp inside and outside. This is similar to the condensation on your windows inside your vehicle during the rain and doesn't indicate a problem with your vehicle. If the water leaks into the lamp bulb circuitry, have the vehicle checked by an authorized HYUNDAI dealer.

Headlight, position light, turn signal light, front fog light bulb replacement

(1) Headlight (High)
(2) Headlight (Low)
(3) Front turn signal light
(4) Position light
(5) Front fog light

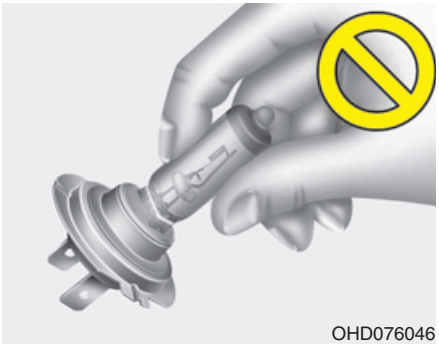

OHD076046

⚠ WARNING - Halogen bulbs

- **Halogen bulbs contain pressurized gas that will produce flying pieces of glass if broken.**
- **Always handle them carefully, and avoid scratches and abrasions. If the bulbs are lit, avoid contact with liquids. Never touch the glass with bare hands. Residual oil may cause the bulb to overheat and burst when lit. A bulb should be operated only when installed in a headlight.**

(Continued)

(Continued)

- **If a bulb becomes damaged or cracked, replace it immediately and carefully dispose of it.**
- **Wear eye protection when changing a bulb. Allow the bulb to cool down before handling it.**

Headlight (HID type)

If the light bulb does not operate, have the vehicle checked by an authorized HYUNDAI dealer.

⚠ WARNING - HID Headlight low beam (if equipped)

Do not attempt to replace or inspect the low beam (XENON bulb) due to electric shock danger. If the low beam (XENON bulb) is not working, have your vehicle checked by an authorized HYUNDAI Dealer

✻ NOTICE

HID lamps have superior performance vs. halogen bulbs. HID lamps are estimated by the manufacturer to last twice as long or longer than halogen bulbs depending on their frequency of use. They will probably require replacement at some point in the life of the vehicle. Cycling the headlamps on and off more than typical use will shorten HID lamps life. HID lamps do not fail in the same manner as halogen incandescent lamps. If a headlamp goes out after a period of operation but will immediately relight when the headlamp switch is cycled it is likely the HID lamp needs to be replaced. HID lighting components are more complex than conventional halogen bulbs thus have higher replacement cost.

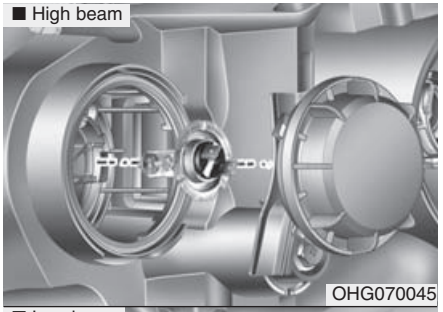

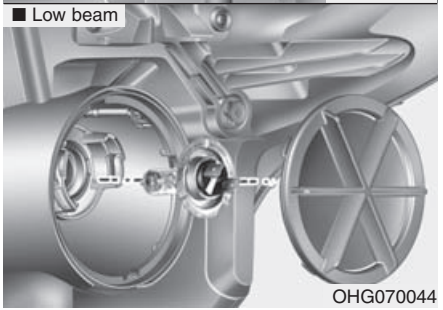

Headlight (bulb type)

1. Turn off the engine.
2. Open the hood.
3. Remove the headlight bulb cover by turning it counterclockwise.
4. Disconnect the headlight bulb socket connector.
5. Remove the bulb from the headlight assembly.
6. Install a new headlight bulb.
7. Connect the headlight bulb socket connector.
8. Install the headlight bulb cover by turning it clockwise.

✻ NOTICE

We recommend that the headlight aiming be adjusted after an accident or after the headlight assembly is reinstalled at an authorized HYUNDAI dealer.

Traffic Change (For Europe)

The low beam light distribution is asymmetric.

If you go abroad to a country with opposite traffic direction, this asymmetric part will dazzle oncoming car driver. To prevent dazzle, ECE regulation demand several technical solutions (ex. automatic change system, adhesive sheet, down aiming). This headlamps are designed not to dazzle opposite drivers. So, you do not need to change your headlamps in a country with opposite traffic direction.

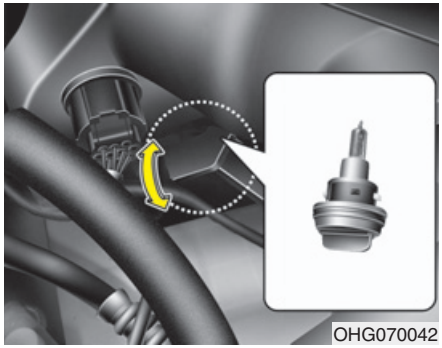

Turn signal light

1. Turn off the engine.
2. Open the hood.
3. Remove the socket from the assembly by turning the socket counterclockwise until the tabs on the socket align with the slots on the assembly.
4. Remove the bulb from the socket by pressing it in and rotating it counterclockwise until the tabs on the bulb align with the slots in the socket. Pull the bulb out of the socket
5. Insert a new bulb by inserting it into the socket and rotating it until it locks into place.
6. Install the socket in the assembly by aligning the tabs on the socket with the slots in the assembly. Push the socket into the assembly and turn the socket clockwise.

Position and front fog light

If the light bulb does not operate, have the vehicle checked by an authorized HYUNDAI dealer.

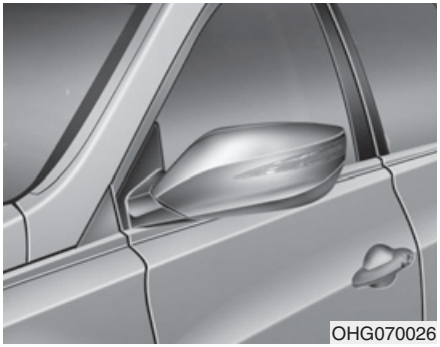

Side repeater light bulb replacement

If the light bulb does not operate, have the vehicle checked by an authorized HYUNDAI dealer.

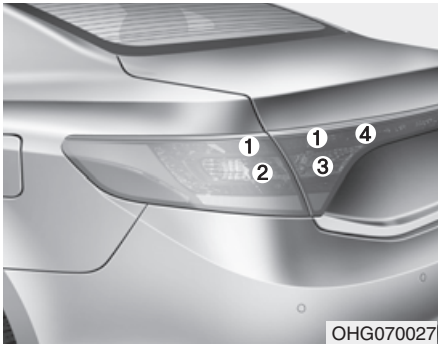

Rear combination light bulb replacement

(1) Stop and tail light
(2) Rear turn signal light
(3) Backup light
(4) Rear fog light (if equipped)

Stop and tail light

If the light bulb does not operate, have the vehicle checked by an authorized HYUNDAI dealer.

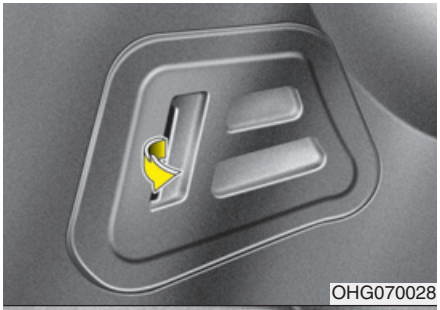
OHG070028

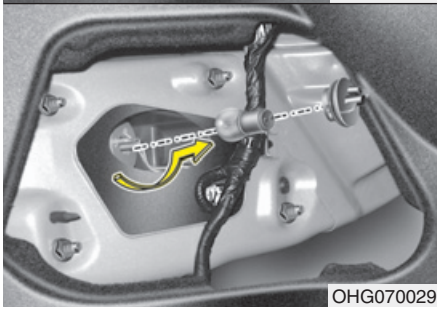
OHG070029

Rear turn signal light

1. Turn off the engine.
2. Open the trunk.
3. Remove the service cover by pulling out the service cover.
4. Remove the socket from the assembly by turning the socket counterclockwise until the tabs on the socket align with the slots on the assembly.
5. Remove the bulb from the socket by pressing it in and rotating it counter-clockwise until the tabs on the bulb align with the slots in the socket. Pull the bulb out of the socket.
6. Insert a new bulb by inserting it into the socket and rotating it until it locks into place.
7. Install the socket in the assembly by aligning the tabs on the socket with the slots in the assembly. Push the socket into the assembly and turn the socket clockwise.
8. Install the service cover by putting it into the service hole.

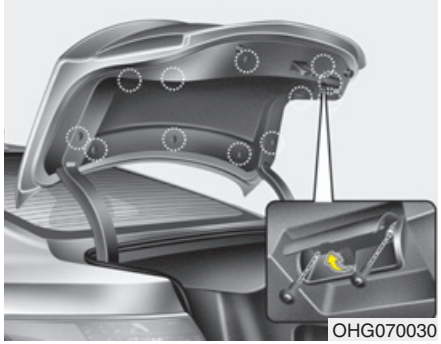
OHG070030

Backup light

1. Turn off the engine.
2. Open the trunk.
3. Loosen the retaining screw of the trunk lid cover and then remove the cover.
4. Remove the socket from the assembly by turning the socket counter clock-wise until the tabs on the socket align with the slots on the assembly.

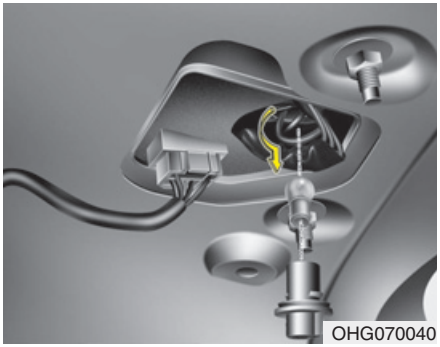
OHG070040

5. Remove the bulb by pulling it straight out.
6. Insert a new bulb by inserting it into the socket and rotating it until it locks into place.
7. Install the socket into the assembly by aligning the tabs on the socket with the slots in the assembly. Push the socket into the assembly and turn the socket clockwise.
8. Reinstall the trunk lid cover by pushing in the screw.

Rear fog light (if equipped)

If the light bulb does not operate, have the vehicle checked by an authorized HYUNDAI dealer.

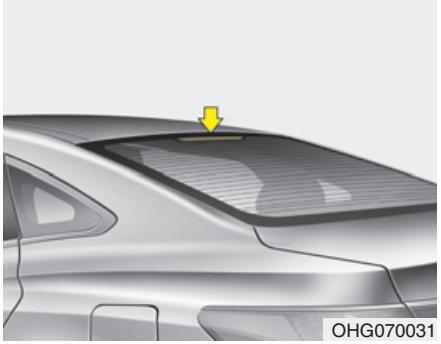
OHG070031

High mounted stop light replacement (if equipped)

If the light bulb does not operate, have the vehicle checked by an authorized HYUNDAI dealer.

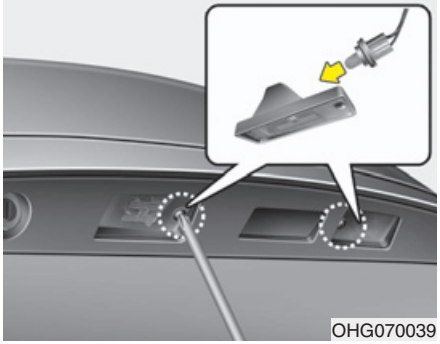
OHG070039

License plate light bulb replacement

1. Turn off the engine.
2. Loosen the retaining screws with a philips head screwdriver.
3. Remove the bulb assembly by turning it counterclockwise.
4. Remove the bulb by pulling it straight out.
5. Install a new bulb.
6. Reinstall the bulb assembly securely with the retaining screws.

■ Glove box lamp

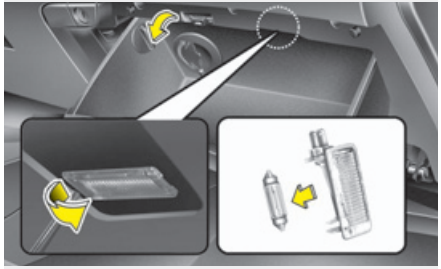

■ Sunvisor lamp

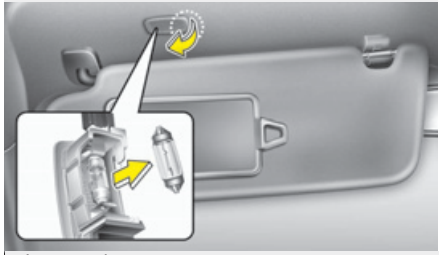

■ Luggage lamp

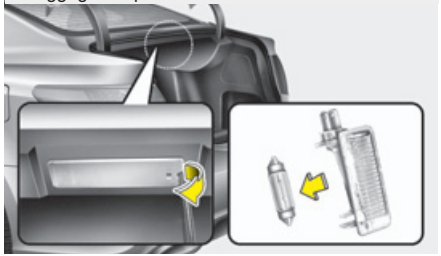

OHG070033/OHG070032/OHG070034

Interior light bulb replacement

Glove box lamp, sunvisor lamp and luggage lamp

1. Using a flat-blade screwdriver, gently pry the lens from the interior light housing.
2. Remove the bulb by pulling it straight out.

⚠ WARNING

Prior to working on the Interior Lights, ensure that the "OFF" button is pressed to avoid burning your fingers or receiving an electric shock.

3. Install a new bulb in the socket.
4. Align the lens tabs with the interior light housing notches and snap the lens into place.

⚠ CAUTION

Use care not to dirty or damage lens, lens tab, and plastic housings.

■ Map lamp

■ Door courtesy lamp

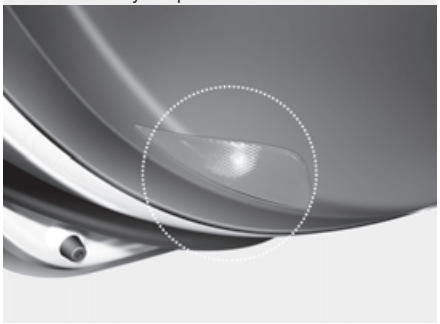

OHG070035/OHG070036

■ Room lamp

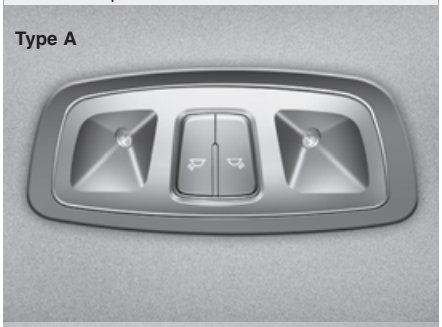

OHG070037/OHG070038

Map lamp, room lamp and door courtesy lamp

If the light bulb does not operate, have the vehicle checked by an authorized HYUNDAI dealer.

APPEARANCE CARE

Exterior care

Exterior general caution

It is very important to follow the label directions when using any chemical cleaner or polish. Read all warning and caution statements that appear on the label.

Finish maintenance

Washing

To help protect your vehicle's finish from rust and deterioration, wash it thoroughly and frequently at least once a month with lukewarm or cold water.

If you use your vehicle for off-road driving, you should wash it after each off-road trip. Pay special attention to the removal of any accumulation of salt, dirt, mud, and other foreign materials. Make sure the drain holes in the lower edges of the doors and rocker panels are kept clear and clean.

Insects, tar, tree sap, bird droppings, industrial pollution and similar deposits can damage your vehicle's finish if not removed immediately.

Even prompt washing with plain water may not completely remove all these deposits. A mild soap, safe for use on painted surfaces, may be used.

After washing, rinse the vehicle thoroughly with lukewarm or cold water. Do not allow soap to dry on the finish.

⚠ CAUTION

- ***Do not use strong soap, chemical detergents or hot water, and do not wash the vehicle in direct sunlight or when the body of the vehicle is warm.***
- ***Be careful when washing the side windows of your vehicle. Especially, with high-pressure water, water may leak through the windows and wet the interior.***
- ***To prevent damage to the plastic parts and lamps, do not clean with chemical solvents or strong detergents.***

⚠ WARNING - Wet brakes

After washing the vehicle, test the brakes while driving slowly to see if they have been affected by water. If braking performance is impaired, dry the brakes by applying them lightly while maintaining a slow forward speed.

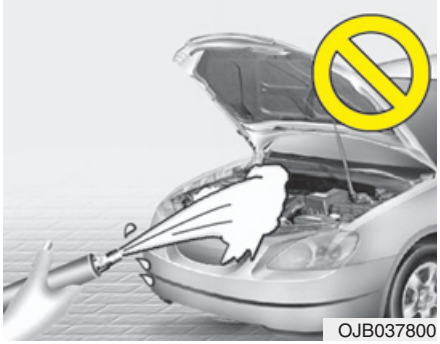
OJB037800

⚠ **CAUTION**

- ***Water washing in the engine compartment including high pressure water washing may cause the failure of electrical circuits or engine and related part located in the engine compartment.***
- ***Never allow water or other liquids to come in contact with electrical/electronic components and air duct inside the vehicle as this may damage them.***

Waxing

Wax the vehicle when water will no longer bead on the paint.

Always wash and dry the vehicle before waxing. Use a good quality liquid or paste wax, and follow the manufacturer's instructions. Wax all metal trim to protect it and to maintain its luster.

Removing oil, tar, and similar materials with a spot remover will usually strip the wax from the finish. Be sure to re-wax these areas even if the rest of the vehicle does not yet need waxing.

⚠ **CAUTION**

- ***Wiping dust or dirt off the body with a dry cloth will scratch the finish.***
- ***Do not use steel wool, abrasive cleaners, or strong detergents containing highly alkaline or caustic agents on chrome-plated or anodized aluminum parts. This may result in damage to the protective coating and cause discoloration or paint deterioration.***

Finish damage repair

Deep scratches or stone chips in the painted surface must be repaired promptly. Exposed metal will quickly rust and may develop into a major repair expense.

✻ **NOTICE**

If your vehicle is damaged and requires any metal repair or replacement, be sure the body shop applies anti-corrosion materials to the parts repaired or replaced.

Bright-metal maintenance

- To remove road tar and insects, use a tar remover, not a scraper or other sharp object.
- To protect the surfaces of bright-metal parts from corrosion, apply a coating of wax or chrome preservative and rub to a high luster.
- During winter weather or in coastal areas, cover the bright metal parts with a heavier coating of wax or preservative. If necessary, coat the parts with non-corrosive petroleum jelly or other protective compound.

Underbody maintenance

Corrosive materials used for ice and snow removal and dust control may collect on the underbody. If these materials are not removed, accelerated rusting can occur on underbody parts such as the fuel lines, frame, floor pan and exhaust system, even though they have been treated with rust protection.

Thoroughly flush the vehicle underbody and wheel openings with lukewarm or cold water once a month, after off-road driving and at the end of each winter. Pay special attention to these areas because it is difficult to see all the mud and dirt. It will do more harm than good to wet down the road grime without removing it. The lower edges of doors, rocker panels, and frame members have drain holes that should not be allowed to clog with dirt; trapped water in these areas can cause rusting.

⚠ WARNING

After washing the vehicle, test the brakes while driving slowly to see if they have been affected by water. If braking performance is impaired, dry the brakes by applying them lightly while maintaining a slow forward speed.

Aluminum or chrome wheel maintenance

The aluminum or chrome wheels are coated with a clear protective finish.

- Do not use any abrasive cleaner, polishing compound, solvent, or wire brushes on aluminum or chrome wheels. They may scratch or damage the finish.
- Clean the wheel when it has cooled.
- Use only a mild soap or neutral detergent, and rinse thoroughly with water. Also, be sure to clean the wheels after driving on salted roads. This helps prevent corrosion.
- Avoid washing the wheels with high-speed car wash brushes.
- Do not use any alkaline or acid detergent. It may damage and corrode the aluminum or chrome wheels coated with a clear protective finish.

Corrosion protection

Protecting your vehicle from corrosion

By using the most advanced design and construction practices to combat corrosion, we produces cars of the highest quality. However, this is only part of the job. To achieve the long-term corrosion resistance your vehicle can deliver, the owner's cooperation and assistance is also required.

Common causes of corrosion

The most common causes of corrosion on your car are:

- Road salt, dirt and moisture that is allowed to accumulate underneath the car.
- Removal of paint or protective coatings by stones, gravel, abrasion or minor scrapes and dents which leave unprotected metal exposed to corrosion.

High-corrosion areas

If you live in an area where your car is regularly exposed to corrosive materials, corrosion protection is particularly important. Some of the common causes of accelerated corrosion are road salts, dust control chemicals, ocean air and industrial pollution.

Moisture breeds corrosion

Moisture creates the conditions in which corrosion is most likely to occur. For example, corrosion is accelerated by high humidity, particularly when temperatures are just above freezing. In such conditions, the corrosive material is kept in contact with the car surfaces by moisture that is slow to evaporate.

Mud is particularly corrosive because it is slow to dry and holds moisture in contact with the vehicle. Although the mud appears to be dry, it can still retain the moisture and promote corrosion.

High temperatures can also accelerate corrosion of parts that are not properly ventilated so the moisture can be dispersed. For all these reasons, it is particularly important to keep your car clean and free of mud or accumulations of other materials. This applies not only to the visible surfaces but particularly to the underside of the car.

To help prevent corrosion

You can help prevent corrosion from getting started by observing the following:

Keep your car clean

The best way to prevent corrosion is to keep your car clean and free of corrosive materials. Attention to the underside of the car is particularly important.

- If you live in a high-corrosion area — where road salts are used, near the ocean, areas with industrial pollution, acid rain, etc.—, you should take extra care to prevent corrosion. In winter, hose off the underside of your car at least once a month and be sure to clean the underside thoroughly when winter is over.
- When cleaning underneath the car, give particular attention to the components under the fenders and other areas that are hidden from view. Do a thorough job; just dampening the accumulated mud rather than washing it away will accelerate corrosion rather than prevent it. Water under high pressure and steam are particularly effective in removing accumulated mud and corrosive materials.
- When cleaning lower door panels, rocker panels and frame members, be sure that drain holes are kept open so that moisture can escape and not be trapped inside to accelerate corrosion.

Keep your garage dry

Don't park your car in a damp, poorly ventilated garage. This creates a favorable environment for corrosion. This is particularly true if you wash your car in the garage or drive it into the garage when it is still wet or covered with snow, ice or mud. Even a heated garage can contribute to corrosion unless it is well ventilated so moisture is dispersed.

Keep paint and trim in good condition

Scratches or chips in the finish should be covered with "touch-up" paint as soon as possible to reduce the possibility of corrosion. If bare metal is showing through, the attention of a qualified body and paint shop is recommended.

Bird droppings : Bird droppings are highly corrosive and may damage painted surfaces in just a few hours. Always remove bird droppings as soon as possible.

Don't neglect the interior

Moisture can collect under the floor mats and carpeting to cause corrosion. Check under the mats periodically to be sure the carpeting is dry. Use particular care if you carry fertilizers, cleaning materials or chemicals in the car.

These should be carried only in proper containers and any spills or leaks should be cleaned up, flushed with clean water and thoroughly dried.

Interior care

Interior general precautions

Prevent chemicals such as perfume, cosmetic oil, sun cream, hand cleaner, and air freshener from contacting the interior parts because they may cause damage or discoloration. If they do contact the interior parts, wipe them off immediately. See the instructions for the proper way to clean vinyl.

⚠ CAUTION

Never allow water or other liquids to come in contact with electrical/electronic components inside the vehicle as this may damage them.

⚠ CAUTION

When cleaning leather products (steering wheel, seats etc.), use neutral detergents or low alcohol content solutions. If you use high alcohol content solutions or acid/alkaline detergents, the color of the leather may fade or the surface may get stripped off.

Cleaning the upholstery and interior trim

Vinyl

Remove dust and loose dirt from vinyl with a whisk broom or vacuum cleaner. Clean vinyl surfaces with a vinyl cleaner.

Fabric

Remove dust and loose dirt from fabric with a whisk broom or vacuum cleaner. Clean with a mild soap solution recommended for upholstery or carpets. Remove fresh spots immediately with a fabric spot cleaner. If fresh spots do not receive immediate attention, the fabric can be stained and its color can be affected. Also, its fire-resistant properties can be reduced if the material is not properly maintained.

⚠ CAUTION

Using anything but recommended cleaners and procedures may affect the fabric's appearance and fire-resistant properties.

Cleaning the lap/shoulder belt webbing

Clean the belt webbing with any mild soap solution recommended for cleaning upholstery or carpet. Follow the instructions provided with the soap. Do not bleach or re-dye the webbing because this may weaken it.

Cleaning the interior window glass

If the interior glass surfaces of the vehicle become fogged (that is, covered with an oily, greasy or waxy film), they should be cleaned with glass cleaner. Follow the directions on the glass cleaner container.

⚠ CAUTION

Do not scrape or scratch the inside of the rear window. This may result in damage to the rear window defroster grid.

EMISSION CONTROL SYSTEM (IF EQUIPPED)

The emission control system of your vehicle is covered by a written limited warranty. Please see the warranty information contained in the Service Passport in your vehicle.

Your vehicle is equipped with an emission control system to meet all applicable emission regulations.

There are three emission control systems, as follows.

(1) Crankcase emission control system
(2) Evaporative emission control system
(3) Exhaust emission control system

In order to assure the proper function of the emission control systems, it is recommended that you have your car inspected and maintained by an authorized HYUNDAI dealer in accordance with the maintenance schedule in this manual.

Caution for the Inspection and Maintenance Test (With Electronic Stability Program (ESP) system)

- **To prevent the vehicle from misfiring during dynamometer testing, turn the Electronic Stability Program (ESP) system off by pressing the ESP switch.**
- **After dynamometer testing is completed, turn the ESP system back on by pressing the ESP switch again.**

1. Crankcase emission control system

The positive crankcase ventilation system is employed to prevent air pollution caused by blow-by gases being emitted from the crankcase. This system supplies fresh filtered air to the crankcase through the air intake hose. Inside the crankcase, the fresh air mixes with blow-by gases, which then pass through the PCV valve into the induction system.

2. Evaporative emission control system

The Evaporative Emission Control System is designed to prevent fuel vapors from escaping into the atmosphere.

Canister

Fuel vapors generated inside the fuel tank are absorbed and stored in the onboard canister. When the engine is running, the fuel vapors absorbed in the canister are drawn into the surge tank through the purge control solenoid valve.

Purge Control Solenoid Valve (PCSV)

The purge control solenoid valve is controlled by the Engine Control Module (ECM); when the engine coolant temperature is low during idling, the PCSV closes so that evaporated fuel is not taken into the engine. After the engine warms-up during ordinary driving, the PCSV opens to introduce evaporated fuel to the engine.

3. Exhaust emission control system

The Exhaust Emission Control System is a highly effective system which controls exhaust emissions while maintaining good vehicle performance.

Vehicle modifications

This vehicle should not be modified. Modification of your vehicle could affect its performance, safety or durability and may even violate governmental safety and emissions regulations.

In addition, damage or performance problems resulting from any modification may not be covered under warranty.

- If you use unauthorized electronic devices, it may cause the vehicle to operate abnormally, wire damage, battery discharge and fire. For your safety, do not use unauthorized electronic devices.

Engine exhaust gas precautions (carbon monoxide)

- Carbon monoxide can be present with other exhaust fumes. Therefore, if you smell exhaust fumes of any kind inside your vehicle, have it inspected and repaired immediately. If you ever suspect exhaust fumes are coming into your vehicle, drive it only with all the windows fully open. Have your vehicle checked and repaired immediately.

⚠ WARNING - Exhaust

Engine exhaust gases contain carbon monoxide (CO). Though colorless and odorless, it is dangerous and could be lethal if inhaled. Follow the instructions on this page to avoid CO poisoning.

- Do not operate the engine in confined or closed areas (such as garages) any more than what is necessary to move the vehicle in or out of the area.
- When the vehicle is stopped in an open area for more than a short time with the engine running, adjust the ventilation system (as needed) to draw outside air into the vehicle.
- Never sit in a parked or stopped vehicle for any extended time with the engine running.
- When the engine stalls or fails to start, excessive attempts to restart the engine may cause damage to the emission control system.

Operating precautions for catalytic converters (if equipped)

⚠ WARNING - Fire

- **A hot exhaust system can ignite flammable items under your vehicle. Do not park, idle, or drive the vehicle over or near flammable objects, such as grass, vegetation, paper, leaves, etc.**
- **The exhaust system and catalytic system are very hot while the engine is running or immediately after the engine is turned off. Keep away from the exhaust system and catalytic, you may get burned.**

  Also, do not remove the heat sink around the exhaust system, do not seal the bottom of the vehicle or do not coat the vehicle for corrosion control. It may present a fire risk under certain conditions.

Your vehicle is equipped with a catalytic converter emission control device.

Therefore, the following precautions must be observed:

- Make sure to refuel your vehicle according to the "Fuel requirements" suggested in section 1.
- Do not operate the vehicle when there are signs of engine malfunction, such as misfire or a noticeable loss of performance.
- Do not misuse or abuse the engine. Examples of misuse are coasting with the ignition off and descending steep grades in gear with the ignition off.
- Do not operate the engine at high idle speed for extended periods (5 minutes or more).
- Do not modify or tamper with any part of the engine or emission control system. All inspections and adjustments must be made by an authorized HYUNDAI dealer.
- Avoid driving with a extremly low fuel level. Running out of fuel could cause the engine to misfire, damaging the catalytic converter.

Failure to observe these precautions could result in damage to the catalytic converter and to your vehicle. Additionally, such actions could void your warranties.

Engine / 8-2
Dimensions / 8-2
Bulb wattage / 8-2
Tires and wheels / 8-3
Load and speed capacity tires / 8-3
Weight and volume / 8-4
Recommended lubricants and capacities / 8-5
Vehicle identification number (VIN) / 8-7
Vehicle certification label / 8-8
Tire specification and pressure label / 8-8
Engine number / 8-8
Air conditioner compressor label / 8-9
Declaration of conformity / 8-9

Specifications & Consumer information 8

ENGINE

Item		2.4L	3.0L
Displacement	cc (cu. in)	2359 (143.95)	2999 (183.01)
Bore x Stroke	mm (in.)	88x97 (3.46x3.81)	92x75.2 (3.62x2.96)
Firing order		1-3-4-2	1-2-3-4-5-6
No. of cylinders		4, In-line	6, V-type

DIMENSIONS

Item	mm (in)	
Overall length	4910 (193.3)	
Overall width	1860 (73.2)	
Overall height	1470 (57.8)	
Front tread	225/55 R17	1613 (63.5)
	245/45 R18	1606 (63.2)
	245/40 R19	1602 (63.0)
Rear tread	225/55 R17	1614 (63.5)
	245/45 R18	1607 (63.2)
	245/40 R19	1603 (63.1)
Wheelbase	2845 (112.0)	

BULB WATTAGE

Light Bulb		Wattage	Bulb type
Front	Headlights (Low)	55 or 35 (HID)	H7 or D1S
	Headlights (High)	55	H7
	Front turn signal lights	21	HY21W
	Position lights	LED	LED
	Side repeater lights	LED	LED
	Front fog lights	35	H8
Rear	Rear fog lights*	LED	LED
	Stop light	LED	LED
	Tail light	LED	LED
	Rear turn signal lights	27	PY27W
	Back-up lights	16	W16W
	High mounted stop light*	LED	LED
	License plate lights	5	W5W
Interior	Map lamps	LED	LED
	Room lamps	LED	LED
	Luggage lamp	5	FESTOON
	Glove box lamp	5	FESTOON
	Vanity mirror lamps	5	FESTOON

* : If equipped

TIRES AND WHEELS

Item	Tire size	Wheel size	Inflation pressure bar (psi, kPa)				Wheel lug nut torque kg•m (lb•ft, N•m)
			Normal load *1		Maximum load		
			Front	Rear	Front	Rear	
Full size tire	225/55R17	7.0Jx17	2.2 (32, 220)	2.2 (32, 220)	2.2 (32, 220)	2.2 (32, 220)	9~11 (65~79, 88~107)
	245/45R18	7.5Jx18	2.2 (32, 220)	2.2 (32, 220)	2.2 (32, 220)	2.2 (32, 220)	
	245/40R19	8.0Jx19	2.2 (32, 220)	2.2 (32, 220)	2.2 (32, 220)	2.2 (32, 220)	

*1: Normal load : Up to 3 persons

⚠ CAUTION

When replacing tires, use the same size originally supplied with the vehicle.
Using tires of a different size can damage the related parts or make it work irregularly.

LOAD AND SPEED CAPACITY TIRES

Item	Tire size	Wheel size	Load Capacity		Speed Capacity	
			LI *1	kg	SS *2	km/h
Full size tire	225/55R17	7.0J×17	97	730	V	240
	245/45R18	7.5J×18	94	670	V	240
	245/40R19	8.0J×19	94	670	V	240

*1 LI : LOAD INDEX
*2 SS : SPEED SYMBOL

WEIGHT AND VOLUME

Item		2.4L	3.0L
Gross vehicle weight kg (lbs.)		2050 (4519)	2120 (4673)
Luggage volume *l* (cu ft)	SAE	461 (16.2)	
	VDA	546 (19.2)	

RECOMMENDED LUBRICANTS AND CAPACITIES

To help achieve proper engine and powertrain performance and durability, use only lubricants of the proper quality. The correct lubricants also help promote engine efficiency that results in improved fuel economy.
These lubricants and fluids are recommended for use in your vehicle.

Lubricant			Volume	Classification
Engine oil *1 *2 (drain and refill) Recommends Shell HELIX Motor oils	2.4L	With oil cooler	4.6 *l* (4.86 US qt.) *3	API Service SM *5, ILSAC GF-4 or above
			4.8 *l* (5.07 US qt.) *4	
		Without oil cooler	4.5 *l* (4.76 US qt.) *3	
			4.7 *l* (4.97 US qt.) *4	
	3.0L		5.7 *l* (6.02 US qt.)	
Engine oil consumption	Normal driving condition		MAX. 1 *l* /1500 km	-
	Severe driving condition		MAX. 1 *l* /1000 km	-
Automatic transaxle fluid	2.4L		7.1 *l* (7.50 US qt.)	MICHANG ATF SP-IV, SK ATF SP-IV NOCA ATF SP-IV, HYUNDAI genuine ATF SP-IV
	3.0L		7.8 *l* (8.24 US qt.)	
Power steering fluid			0.9 *l* (0.95 US qt.)	PSF-4
Coolant	2.4L		6.8 *l* (7.18 US qt.)	Mixture of antifreeze and water (Ethylene glycol base coolant for aluminum radiator)
	3.0L		8.4 *l* (8.87 US qt.)	
Brake fluid			0.7~0.8 *l* (0.7~0.8 US qt.)	FMVSS116 DOT-3 or DOT-4
Fuel			70 *l* (18.49 US gal.)	-

*1 Refer to the recommended SAE viscosity numbers on the next page.

*2 Engine oils labeled Energy Conserving Oil are now available. Along with other additional benefits, they contribute to fuel economy by reducing the amount of fuel necessary to overcome engine friction. Often, these improvements are difficult to measure in everyday driving, but in a year's time, they can offer significant cost and energy savings.

*3 Yellow engine oil dipstick

*4 Red engine oil dipstick

*5 If the API service SM engine oil is not available in your country, you are able to use API service SL.

Recommended SAE viscosity number

⚠ CAUTION

Always be sure to clean the area around any filler plug, drain plug, or dipstick before checking or draining any lubricant. This is especially important in dusty or sandy areas and when the vehicle is used on unpaved roads. Cleaning the plug and dipstick areas will prevent dirt and grit from entering the engine and other mechanisms that could be damaged.

Engine oil viscosity (thickness) has an effect on fuel economy and cold weather operating (engine start and engine oil flowability). Lower viscosity engine oils can provide better fuel economy and cold weather performance, however, higher viscosity engine oils are required for satisfactory lubrication in hot weather. Using oils of any viscosity other than those recommended could result in engine damage.

When choosing an oil, consider the range of temperature your vehicle will be operated in before the next oil change. Proceed to select the recommended oil viscosity from the chart.

Temperature Range for SAE Viscosity Numbers

Temperature										
	°C	-30	-20	-10	0	10	20	30	40	50
	(°F)		-10	0	20	40	60	80	100	120
Gasoline Engine Oil *1						20W-50				
						15W-40				
					10W-30					
		5W-20*2, 5W-30								

*1. For better fuel economy, it is recommended to use the engine oil of a viscosity grade SAE 5W-20*2 (API SM / ILSAC GF-4). However, if the engine oil is not available in your country, select the proper engine oil using the engine oil viscosity chart.

*2. In Middle East, do not use the engine oil of viscosity grade SAE 5W-20.

VEHICLE IDENTIFICATION NUMBER (VIN)

■ Type A

• 2.4L

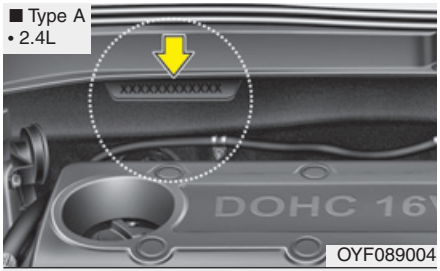

OYF089004

• 3.0L

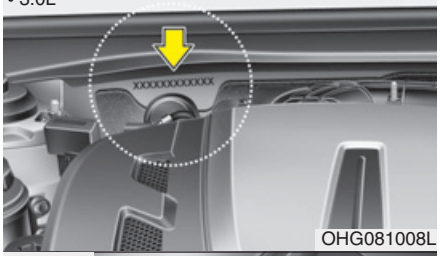

OHG081008L

■ Type B

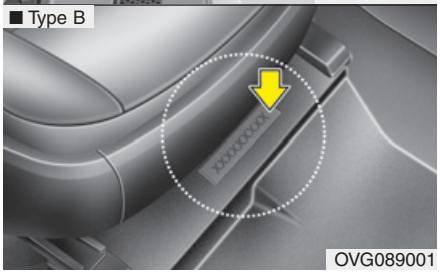

OVG089001

The vehicle identification number (VIN) is the number used in registering your car and in all legal matters pertaining to its ownership, etc.

The number is punched on the engine compartment bulkhead or on the floor under the front passenger's seat.

VIN label

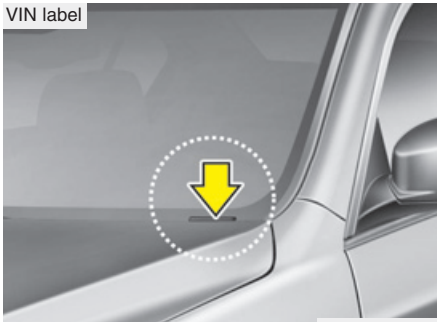

OBH088005N

The VIN is also on a plate attached to the top of the dashboard. The number on the plate can easily be seen through the windshield from outside.

VEHICLE CERTIFICATION LABEL

■ Type A

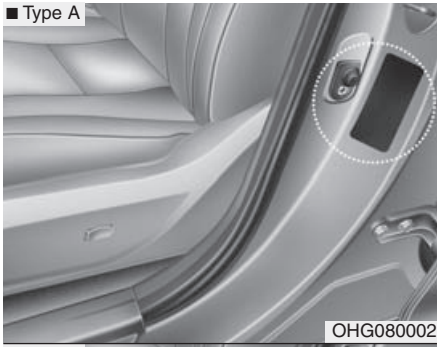

OHG080002

■ Type B

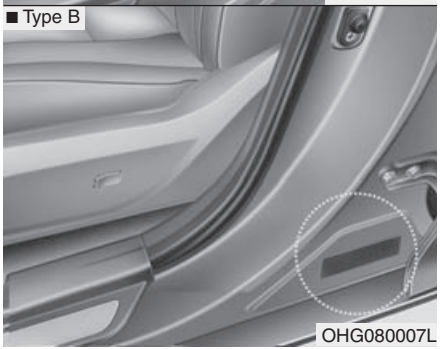

OHG080007L

The vehicle certification label attached on the driver's (or front passenger's) side center pillar gives the vehicle identification number (VIN).

TIRE SPECIFICATION AND PRESSURE LABEL

OHG050081L

The tires supplied on your new vehicle are chosen to provide the best performance for normal driving.

The tire label located on the driver's side center pillar gives the tire pressures recommended for your car.

ENGINE NUMBER

■ 2.4L

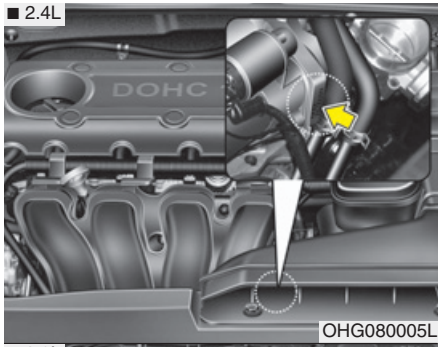

OHG080005L

■ 3.0L

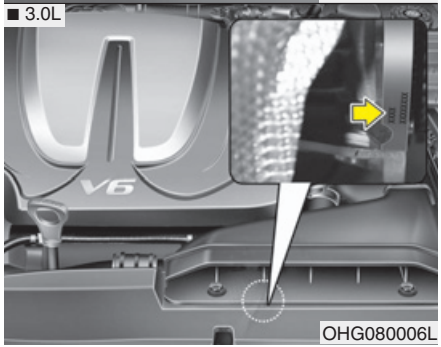

OHG080006L

The engine number is stamped on the engine block as shown in the drawing.

AIR CONDITIONER COMPRESSOR LABEL

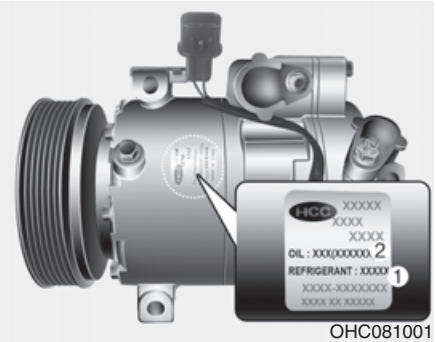

OHC081001

A compressor label informs you the type of compressor your vehicle is equipped with such as model, supplier part number, production number, refrigerant (1) and refrigerant oil (2).

DECLARATION OF CONFORMITY

■ Example

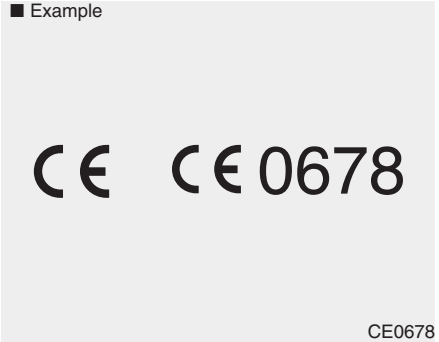

CE0678

The radio frequency components of the vehicle comply with requirements and other relevant provisions of Directive 1995/5/EC.

Further information including the manufacturer's declaration of conformity is available on HYUNDAI web site as follows;

http://service.hyundai-motor.com