MG3 Owners Handbook

Printed in July 2015

CONTENTS

Preface **1**

Introduction **1**

The Owner's Handbook 1

Status at Time of Printing 1

Symbols Used 1

In an Emergency 2

Vehicle Identification Information **3**

Vehicle Identification 3

Vehicle Identification Label 4

1 Instruments and Controls **5**

Instruments and Controls Overview **6**

Instrument Pack **7**

Imperial Instrument Pack * 7

Metric Instrument Pack * 7

Tachometer 8

Speedometer 8

Fuel Gauge 8

Message Centre **9**

CONTENTS

Imperial Message Centre * 9
Metric Message Centre * 9
Gear Selection Display 10
Vehicle Information Display 10
Vehicle Information In Imperial Message Centre * 11
Vehicle Information In Metric Message Centre * 15
Warning Lights and Indicators 20
Lights and Switches 26
Main Light Switch 26
Fog Lights Switch 27
Direction Indicators /Main Beam Lever 28
Hazard Warning Lights 29
Headlight Levelling - Manual Adjustment 30
Touring Abroad 31
Wipers and Washers 32
Front Windscreen Wiper Controls 32
Rain Sensor * 32
Front Windscreen Washer 33
Rear Windscreen Wiper Controls 33

Steering Column **35**
Steering Column Adjustment 35
Horn **36**
Mirrors **37**
Door Mirrors 37
Interior Rear-view Mirror 39
Sun Visor **41**
Windows **42**
Power Operated Window Controls 42
Window Operation 42
Interior Lights **44**
Interior Lamp 44
Centre Console Power Socket **45**
Storage Equipment **46**
Instructions 46
Glovebox 46
Storage Box 47
Front Passenger Lower Storage Box * 47

CONTENTS

Cup Holder **48**

2 Climate Control **49**

Climate Control **50**

Ventilation 50

Heater Controls * 52

Air Conditioning Controls * 55

3 Audio System **59**

CD Player * (Low Line) **60**

Use Instructions 60

CD Player Control Panel 61

Basic Operation 62

Radio Function 65

CD Playing 67

USB 68

AUX 69

Antenna 69

CD Player * (High Line) **70**

Use Instructions 70

CD Player Control Panel 71
Steering Wheel Control Button 72
Basic Operation 73
Menu Operation 76
FM/MW 78
DAB * 80
CD Playing 81
USB 82
iPod/iPhone® 83
AUX 84
Bluetooth 84
Antenna 86

4 Seats & Restraints 87

Seats 88

Correct Seating Position 88
Head Restraints 89
Manual Front Seat 90
Folding the Rear Seats 91

Seat Belts 92

CONTENTS

Seat Belts 92
Seat Belt Pre-tensioners 94
Airbag Supplementary Restraint System (SRS) 95
Airbags 95
Child Restraints 103
Child Restraint Instructions 103
5 Starting & Driving 111
Key 112
Introduction 112
Remote Key Battery Removing and Refitting 113
Child-Proof Locks 115
Alarm System 116
Engine Immobilisation 116
Locking and Unlocking 116
Starting and Driving 121
Docking Station 121
Starting the Engine 122
Stopping the Engine 123

Economical and Environmental Driving 125
Running-in 125
Environment Protection 125
Driving Style 125
How to save fuel and extend the life of the vehicle 126
Maintenance 127
Catalytic Converter 128
Fuel 128
Starting 128
Driving 129
Fuel System 130
Fuel Requirements 130
Fuel Filler 131
Fuel Filling 131
Fuel Cut-off Switch 131
Manual Transmission 133
Gear Lever 133
Brake System 134
Foot Brake 134

CONTENTS

Anti-lock Brakes (ABS) 136
Parking Brake 137
Stability Control System (SCS) and Traction Control (TC) 139
Stability Control System (SCS) 139
Traction Control (TC) 139
Switching On and Off 140
SCS/TC Warning Light 140
Stop/Start Intelligent Fuel Saving System 141
Automatic Shutdown of Engine 142
Automatic Engine Start 142
Battery 143
Stop/Start Intelligent Fuel Saving System Failure 144
Serious Battery Capacity Loss, Starter Inoperative 144
Cruise Control System * 145
Cruise Control System 145
Parking Aid - PDC (Parking Distance Control) * 147
Parking Aid (Ultrasonic Parking Ranging Warning Devices) 147
Tyre Pressure Monitoring System (TPMS) 149
Load Carrying 151

Load Space 151
Internal Loading 151

6 Emergency Information 153

Hazard Warning Devices 154
Hazard Warning Lights 154
Warning Triangle 154

Emergency Starting 155
Using Booster Cables 155
Starting the Vehicle 155

Vehicle Recovery 157
Towing Eye 157
Towing for Recovery 158

Tyre Repair & Wheel Replacement 160
Tool Identification * 160
Tyre Repair * 161
Accessing the Spare Wheel and Tools * 164
Changing a Wheel 165

Fuse Replacement 168

Fuse 168
Fuse Box 169
Passenger Compartment Fuse Box 169
Engine Compartment Fuse Box 172
Bulb Replacement 174
Bulb Specification 174
Bulb Replacement 175
7 Maintenance 177
Maintenance 178
Routine Servicing 178
Bonnet 182
Opening the Bonnet 182
Closing the Bonnet 182
Warning When the Bonnet is Open 182
Engine Compartment 183
Engine Compartment (LHD) 183
Engine Compartment (RHD) 184
Engine 185

Engine Oil 185
Cooling System 187
Coolant Check and Top Up 187
Coolant Specification 187
Antifreeze 188
Brakes 189
Brake Fluid 189
Brake Fluid Specification 190
Power Steering 191
Power Steering Fluid Check and Top Up 191
Power Steering Fluid Specification 192
Battery 193
Battery Safety 193
Battery Disconnection and Replacement 193
Battery Charging 194
Battery Maintenance 195
Washers 197
Windscreen Washer Check and Top Up 197
Washer Nozzles 198

CONTENTS

Washing Fluid Specification 198
Wiper 199
Wiper Blade 199
Replacing Front Wiper Blades 200
Replacing Rear Wiper Blades 200
Tyres 202
Overview 202
New Tyres 202
Directional Tyres 202
Tyre Life 202
Tyre Pressures 202
Driving Style 203
Wheel Balance 203
Wheel Alignment 203
Caring for Your Tyres 203
Tyre Pressures 203
Valves 204
Punctured Tyres 204
Tyre Wear Indicators 204

Replacement Tyres 205
Wheel Fitment Rotation 205
Snow Chains 205
Cleaning and Vehicle Care 207
Washing Your Car 207
Vehicle Graphics Care 209
Cleaning the Interior 210
8 Technical Data 213
Technical Data Dimensions 214
Weights 215
Towing Weights 215
Major Parameters of Engine 216
Recommended Fluids and Capacities 217
Wheel Alignment (Unladen Condition) 218
Wheels and Tyres 218
Tyre Pressures (Cold) 218

Introduction

The Owner's Handbook

This handbook describes all of the vehicles and standard equipment specification within the model range. Some of the information therefore, may not apply to your particular car.

Always remember that if you have any queries concerning the operation or specification of your car, your MG Authorised Repairer will be glad to advise you.

Status at Time of Printing

MG operates a policy of constant product improvement and therefore reserves the right to change specifications without notice at any time. Whilst every effort is made to ensure complete accuracy of the information in this publication, no liabilities for inaccuracies or the consequences thereof, including loss or damage to property, or injury to persons, can be accepted by the manufacturer or MG Authorised Repairer who supplied the publication, except in respect of personal injury caused by the negligence of the manufacturer or MG Authorised Repairer.

Symbols Used

The following symbols used within the handbook call your attention to specific types of information.

Warning

This warning symbol identifies procedures that must be followed precisely, or information that must be considered with great care, in order to reduce the risk of personal injury or serious damage to the car.

Important

IMPORTANT
The statements stated here must be followed strictly, otherwise your car could be damaged.

Note

Note: This describes helpful information.

This symbol indicates that parts described must be disposed of by authorised persons or bodies to protect the environment.

Asterisk

An asterisk (*) appearing within the text, identifies features or items of equipment that are either optional, or are only fitted to some vehicles in the model range.

Illustration Information

Identifies components being explained.

Identifies movement of components being explained.

All illustrations in this handbook are based on a RHD vehicle except where LHD model is stated.

In an Emergency

IMPORTANT

Remember the breakdown safety code

If a breakdown occurs while travelling:

- Wherever possible, consistent with road safety and traffic conditions, the car should be moved off the main thoroughfare, preferably into a lay-by. If a breakdown occurs on a motorway, pull well over to the inside of the hard shoulder.
- Switch on hazard lights.
- If available, position a warning triangle or a flashing amber light 50 to 150 metres (150 to 500 ft) behind your vehicle to warn approaching traffic. Note it is a legal requirement of some countries that a warning triangle is carried in the vehicle, if in doubt consult the local highways agency for further information.
- Consider evacuating passengers through nearside doors onto the verge to reduce risk of injury in the event of collision.

Vehicle Identification Information

Vehicle Identification

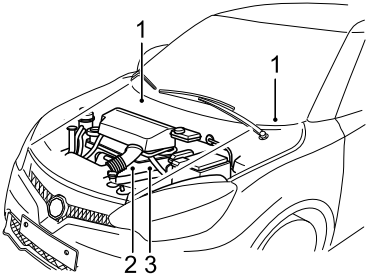

1 Vehicle Identification Number (VIN)

2 Engine Number

3 Transmission Number

Always quote the Vehicle Identification Number (VIN) when communicating with your MG Authorised Repairer.

VIN Location

- Stamped on a plate visible through the bottom left hand corner of the windscreen.
- On the identification plate.
- On the right side panel upper frame in the engine compartment.

Engine Number Location

Stamped on the rear of the cylinder block. (View from the front of the engine)

Transmission Number Location

On a label attached to the upper face of the transmission housing.

Vehicle Identification Label

The vehicle identification label contains the following information.

- Type Approval Number
- Vehicle Identification Number (VIN)
- Gross Vehicle Weight
- Gross Train Weight
- Max Front Axle Weight
- Max Rear Axle Weight
- Paint Code
- Trim Code

Location of Vehicle Identification Label

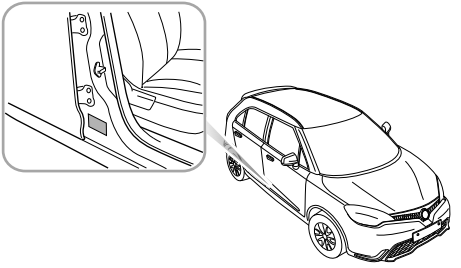

The Vehicle Identification Label is located on the bottom of the right side pillar B.

Instruments and Controls

6 Instruments and Controls Overview
7 Instrument Pack
9 Message Centre
20 Warning Lights and Indicators
26 Lights and Switches
32 Wipers and Washers
35 Steering Column
36 Horn
37 Mirrors
41 Sun Visor
42 Windows
44 Interior Lights
45 Centre Console Power Socket
46 Storage Equipment
48 Cup Holder

Instruments and Controls Overview

Instruments and Controls (RHD)

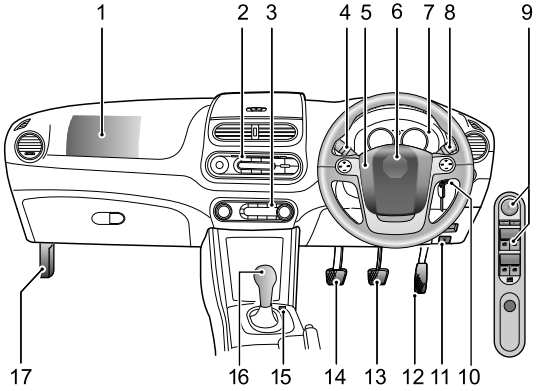

1 Front Passenger Airbag
2 Entertainment System
3 Heating and Air Conditioning Control Switch
4 Main Lights Switch/Direction Indicators/Main Beam Switch/Rear Fog Lights
5 Horn
6 Driver Airbag
7 Instrument Pack
8 Wiper/Washer Switch
9 Electric Exterior Mirror and Window Controls
10 Ignition Switch
11 Fuel Filler Flap Release Handle
12 Accelerator Pedal
13 Brake Pedal
14 Clutch Pedal
15 SCS OFF Switch
16 Gear Shift Lever
17 Bonnet Release

Instrument Pack

Imperial Instrument Pack *

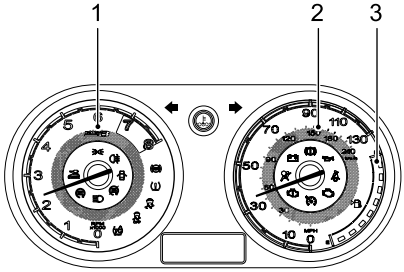

Metric Instrument Pack *

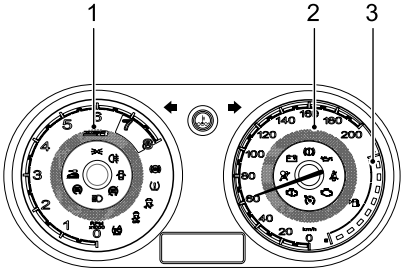

Note: The speedometer in the Imperial Instrument Pack is measured in both MPH and km/h. The speedometer in the Metric Instrument Pack is measured in km/h.

Tachometer

Indicates the engine speed (figure 1) in revolutions per minute (×1000).

IMPORTANT
To protect the engine from damage, never allow the pointer to remain in the red sector of the gauge for prolonged periods.

Speedometer

Indicates the road speed (figure 2), The speedometer of the Imperial Instrument Pack is measured in MPH and km/h. The speedometer of the Metric Instrument Pack is measured in km/h.

Fuel Gauge

The quantity of fuel in the tank is indicated by the number of segments illuminated. there are eight segments in total (figure 3). When the fuel level is full, all eight segments are illuminated in white. When the fuel level is low, the lowest segment changes to yellow from white, and a warning sound will be heard. If the fuel level continues to fall to a critical state, the lowest segment will flash and an audible warning will sound again.

IMPORTANT
When the fuel level is low, refuel at the earliest opportunity. Never allow the car to run out of fuel. The resultant misfire could damage the catalytic converter.

The arrow next to the low fuel warning light indicates that the fuel filler is located on the right hand side of the vehicle.

Message Centre

Imperial Message Centre *

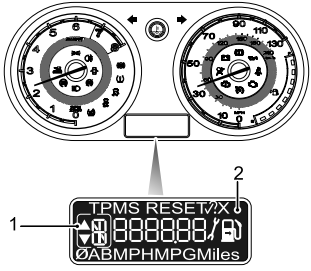

Metric Message Centre *

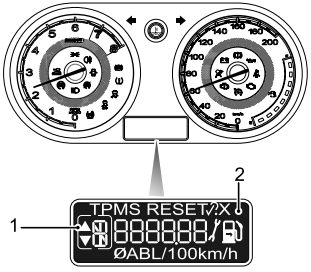

The message centre is located at the bottom of the instrument pack, and it provides the following information:

1 Gear Selection Display
2 Vehicle Information Display

Note: The Imperial Message Centre is measured in imperial units. The Metric Message Centre is measured in metric units.

Gear Selection Display

This segment of the message centre indicates the current gear lever position.

When the car is stationary and neutral position is selected, the display will indicate N. When reverse gear is selected, the display will indicate R.

When the car is in motion, the display area will indicate the current gear selected (e.g. N, R, 1, 2, 3, 4, 5). An indicator will be displayed in this area when a gear change is advised. The up or down arrows flashes to remind the driver to upshift or downshift.

Note: If the clutch is pressed, the gear display is inhibited.

Vehicle Information Display

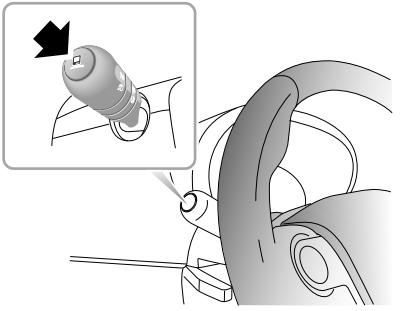

The vehicle information display screen provides the following information:

- Odometer
- Trip Distance A
- Trip Distance B
- Ambient Temperature Display
- Fuel Range to Empty
- Instantaneous Fuel Consumption

- Average Fuel Consumption
- Average Speed
- Next Service
- TPMS Reset

Repeatedly press the button on the end of the main light switch (indicated by arrow in diagram) for less than 2 seconds, and then the above information will be displayed in cycles.

By pressing and holding the button on the end of the main lamp switch for longer than 2 seconds, the selected display can be reset (including trip distance A, trip distance B, average fuel consumption or average speed).

Vehicle Information In Imperial Message Centre *

Odometer

Shows the total distance that the car has travelled.

Trip Distance A and Trip Distance B

This display shows the distance travelled since the trip record was last reset.

Trip distance A and trip distance B are independent distance records, Display range of 0 - 9999 miles, If the mileage is less than 1000 miles, it changes in 0.1 mile increments, more than 1000 miles, it changes in 1 mile increments to a maximum of 9999 miles when it is

automatically reset, trip A and trip B can be reset at any time, so as to record vehicle mileage.

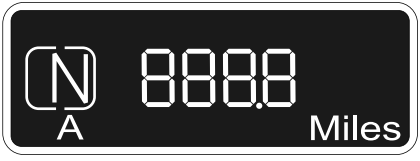

Ambient Temperature Display

Display indicates the ambient air temperature of the air outside the vehicle.

Fuel Range to Empty

Displays the approximate remaining distance that can be travelled before the vehicle needs refuelling. The distance will change when the vehicle is refuelled.

Fuel range to empty is calculated according to fuel remaining and the average fuel consumption is based on a combination of current driving style and the fuel consumption recorded by the computer during the previous few minutes.

Instantaneous Fuel Consumption

This function is automatic and indicates the instantaneous fuel consumption. When the vehicle stops moving or stops using fuel, then the instantaneous fuel consumption display shows "— MPG".

Average Fuel Consumption

This function is automatic and indicates the average fuel consumption since the last time the trip computer was reset (average consumption is calculated by dividing the distance travelled by the amount of fuel used). The consumption value can be reset at any time to begin calculating new consumption values for a particular journey or driving conditions.

The average fuel consumption shall be calculated after the engine starts when the vehicle speed exceeds 3 MPH.

Note: Average consumption is related to driving habits, road condition, load, tyre pressure, the quality of oil, etc.

Average Speed

This function is automatic and indicates the average speed since the last time it was reset. The average speed display can be reset at any time to begin calculating a new average speed value for a particular journey or driving condition.

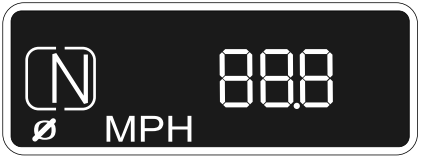

Next Service

Shows the service interval announcement symbol, the estimated distance of the next service remaining before it should be carried out.

Note: The Service Interval Announcement information can only be reset by an MG Authorised Repairer.

TPMS Reset

Enter 'TPMS RESET?' display interface. By pressing and holding the button for longer than 2 seconds. If the text 'TPMS RESET √' is displayed . It indicates TPMS reset successful. If the text 'TPMS RESET X' is displayed . It indicates TPMS reset fail. consult your MG Authorised Repairer.

Note: The TPMS reset menu will only be made available when the car is stationary, with the hand brake applied and ignition on position II.

Vehicle Information In Metric Message Centre *

Odometer

Shows the total distance that the car has travelled.

Trip Distance A and Trip Distance B

The display shows the distance travelled since the trip record was last resert.

Trip distance A and trip distance B are independent distance records, Display range of 0 - 9999 km, If the distance is less than 1000 km, it changes in 0.1 km increments, more than 1000 km, it changes in 1 km increments to a maximum of 9999 km when it is

automatically reset, trip A and trip B can be reset at any time, so as to record vehicle mileage.

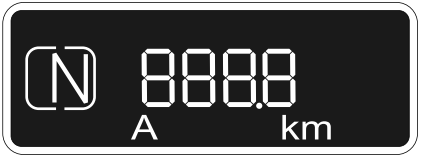

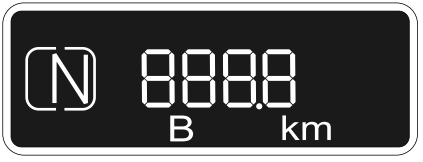

Ambient Temperature Display

Display indicates the ambient temperature of the air outside the vehicle.

Fuel Range to Empty

Displays the approximate remaining distance that can be travelled before the vehicle needs refuelling. The distance will change when the vehicle is refuelled.

Fuel range to empty is calculated according to fuel remaining and the average fuel consumption is based on a combination of current driving style and the fuel consumption recorded by the computer during the previous few minutes.

Instantaneous Fuel Consumption

This function is automatic and indicates the instantaneous fuel consumption. When the vehicle stops moving or stops using fuel, then the instantaneous fuel consumption display shows "— L/100km".

Average Fuel Consumption

This function is automatic and indicates the average fuel consumption since the last time the trip computer was reset (average consumption is calculated by dividing the distance travelled by the amount of fuel used). The consumption value can be reset at any time to begin calculating new consumption values for a particular journey or driving conditions.

The average fuel consumption shall be calculated after the engine starts when the vehicle speed exceeds 5 km/h.

Note: Average consumption is related to driving habits, road condition, load, tyre pressure, the quality of oil, etc.

Average Speed

This function is automatic and indicates the average speed since the last time it was reset. The average speed display can be reset at any time to begin calculating a new average speed value for a particular journey or driving condition.

Next Service

Shows the service interval announcement symbol, the estimated distance of the next service remaining before it should be carried out.

Note: The Service Interval Announcement information can only be reset by an MG Authorised Repairer.

TPMS Reset

Enter 'TPMS RESET?' display interface. By pressing and holding the button for longer than 2 seconds. If the text 'TPMS RESET √' is displayed . It indicates TPMS reset successful. If the text 'TPMS RESET X' is displayed . It indicates TPMS reset fail. consult your MG Authorised Repairer.

***Note:** The TPMS reset menu will only be made available when the car is stationary, with the hand brake applied and ignition on position II.*

Warning Lights and Indicators

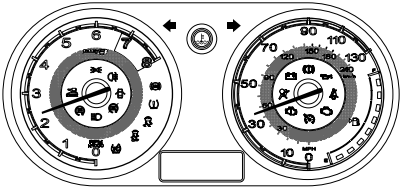

Main Beam - Blue

Illuminates when the headlights are switched to main beam.

Side Lamps - Green

Illuminates when the side or headlights are switched on.

Direction Indicators - Green

The left and right direction indicators are represented by directional arrows located at the top of the instrument display. The warning lights flash synchronised with the exterior left or right direction indicator lights whenever they are operating.

If the hazard warning lights are operated, both warning lights will flash together.

If either warning light flashes very rapidly, this means that one of the front or rear direction indicator lights is not operating.

Note: Failure of a side repeater light will have no effect on the warning light flash frequency.

Rear Fog Light - Yellow

Illuminates when the rear fog lights are switched on.

Airbag - Red

The warning light illuminates as a lamp check when the ignition is switched on. If the light illuminates at any other time or fails to extinguish after start up, an airbag restraint system fault has been detected, then an audible warning will be given when the engine is started. Seek qualified assistance urgently.

Seat Belt Warning - Red

If a seat belt for an occupied front seat remains unfastened, the warning light will illuminate. An audible warning is heard to remind the driver to ensure that both seat belts are securely fastened. If the seat belt for an occupied seat remains unfastened once the vehicle speed has exceeded 15 MPH (25 km/h), the warning lamp will flash accompanied by an audible warning. The warning will continue until either the seat belt is fastened correctly or 90 seconds has expired.

Low Oil Pressure - Red

The warning light illuminates when the ignition is switched on and extinguishes when the engine is running. If the light remains on or illuminates continuously when driving, serious engine damage could occur; stop the vehicle as soon as safety permits and SWITCH OFF THE ENGINE IMMEDIATELY. Seek qualified assistance before driving.

Battery Charging - Red

The warning light illuminates when the ignition is switched on and extinguishes as soon as the engine is running. If the light remains on or illuminates when driving, a fault with the battery charging system is indicated. Seek qualified assistance urgently.

ABS - Yellow

The warning light illuminates as a lamp check when the ignition is switched on, If the light is illuminates, a fault has occurred with the ABS system and you should seek qualified assistance at the earliest opportunity.

If an ABS fault occurs while driving, ABS operation will be suspended, but normal braking will still be available. Seek qualified assistance at the earliest opportunity.

Parking Brake/Brake System Light - Red

The warning light illuminates as a lamp check when the ignition is switched on, Subsequent illumination may indicate a fault with the braking system such as parking brake on or brake fluid level is low or electronic brake force distribution failure.

The light illuminates when the parking brake is applied and extinguishes when it is fully released. If the parking brake is inadvertently left applied, the light will flash and an audible warning will sound when the vehicle speed exceeds 3 MPH (5 km/h). If the warning light remains illuminated after the parking brake has been released, a fault with the braking system is indicated. Check the brake fluid level. If the light continues to illuminate, stop the car as soon as safety permits and seek qualified assistance urgently.

When the ignition switch is off and the driver's door is open, if the parking brake has not been applied, the parking brake alarm will be activated, and the warning light will flash accompanied by an audible warning.

Engine Emission Fault - Yellow

This warning light which is used to indicate an emissions related fault is detected by the engine management system. The warning light illuminates as a lamp check when the ignition is switched on, If an engine operation problem occurs while the vehicle is being driven, the indicator will illuminate. Seek qualified assistance.

Engine Check - Yellow

This warning light is used to indicate an engine operation fault which is detected by the engine management system. The warning light illuminates as a lamp check when the ignition is switched on, If a non-emissions related fault occurs while the vehicle is being driven, the indicator will illuminate. Seek qualified assistance.

Engine Coolant Temperature Warning Light - Red/Blue

The warning light is used to indicate the temperature of engine coolant. The warning light illuminates as a system check when the ignition is switched on. If the warning light illuminates blue, it indicates that the coolant temperature is low, and if the warning light illuminates red, it indicates that the coolant temperature is high, When the temperature continues to rise, the warning light will flash accompanied by an audible warning. If the signal is missing, the warning light is flashed in blue.

If the engine is too hot, severe damage could result; stop the vehicle as soon as safety permits and seek qualified assistance at the earliest opportunity.

Stability Control System (SCS) - Yellow

The warning light indicates that the SCS system is working or faulty. The warning light illuminates as a lamp check when the ignition is switched on, If the SCS system is working, the warning light is off. If the SCS system has a fault, this warning light will stay on. Stop the car as soon as safety permits and contact an MG Authorised Repairer. When the SCS system has an intervention event. the warning light will flash.

Stability Control System (SCS) Off - Yellow

The warning light indicates that the SCS system is switched on or off. The warning light illuminates as a

lamp check when the ignition is switched on, If the function of the SCS system is off. the warning light will illuminate all the time.

Traction Control (TC) Warning Off - Yellow

The warning light indicates that the traction control is switched on or off. The warning light illuminates as a lamp check when the ignition is switched on, If the TC function is manually switched off, the warning light will illuminate all the time.

Tyre Pressure Monitoring System (TPMS) - Yellow

The warning light illuminates as a lamp and system check when the ignition is switched on. If a low tyre pressure is detected the warning light will illuminate. If the light flashes yellow, It indicates the system has a fault. Adjust your tyre pressures or seek qualified assistance.

Engine Immobilizer/Key Battery Low - Red

The warning light does not illuminate when the ignition is switched on. If the engine immobilizer verification fails, the engine cannot be started, and the warning light will be illuminated. If the remote key voltage is too low, the warning light will flash accompanied by an audible warning.

Panel Opening Warning - Red

The warning light indicates that the vehicle doors, bonnet or tailgate are not closed. The warning light does not illuminate when the ignition is switched on. If there is a door, bonnet or tailgate not closed, the warning light will illuminate. If the panel remains open once the vehicle speed has exceeded 3 MPH (5 km/h), the warning light will flash accompanied by an audible warning. The warning will continue until all panels are closed correctly or 30 seconds has expired.

Cruise Control - Yellow/Green *

The warning light does not illuminate when the ignition is switched on. It will illuminate in yellow when cruise control is active and green when the master switch is pressed but no cruise speed is active. If a fault is detected, the warning light will flash yellow.

When cruise control is set, the target speed is shown in LCD, The target speed remains displayed until the actual speed is achieved, at which point the LCD reverts to its previous display.

Intelligent Stop-Start Energy-Saving System Status - Green

If the intelligent stop-start energy-saving system is activated, this light illuminates to indicate to the driver that the engine is being controlled by the intelligent stop-start energy-saving system. When the Stop-Start function is inhibited, the light will extinguish after flashing 3 times.

Intelligent Stop-Start Energy-Saving System Malfunction Warning - Yellow

If the light illuminates during driving, then the Stop-Start system has detected a fault. Contact an MG Authorised Repairer for advice.

Lights and Switches

Main Light Switch

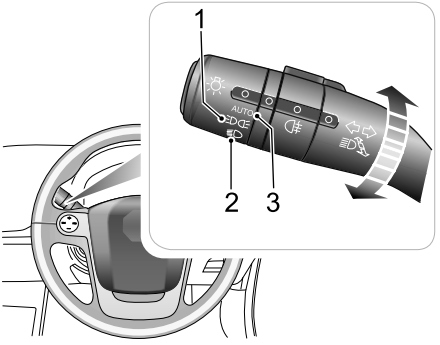

1 Side / Tail / Instrument Pack Lights

2 Headlights

3 AUTO Lights *

Side Lights, Tail Lights, Instrument Pack Light

Turn the main light switch to position 1 to switch on the side, tail and instrument pack lights, the side light indicator will illuminate.

If the lights are still switched on when the driver's door is opened and the key is removed, an audible warning will be given.

Headlights

Turn the lighting switch to position 2 to switch on the headlights.

The headlights will only illuminate when the ignition is switched on.

AUTO Lights *

With the ignition is switched on, turn the lighting switch to AUTO position 3. The AUTO lighting system constantly monitors the ambient light levels and automatically switches the appropriate lights on and off as required.

Fog Lights Switch

Fog lights should be used only when visibility is very poor; other road users could be dazzled in clear conditions.

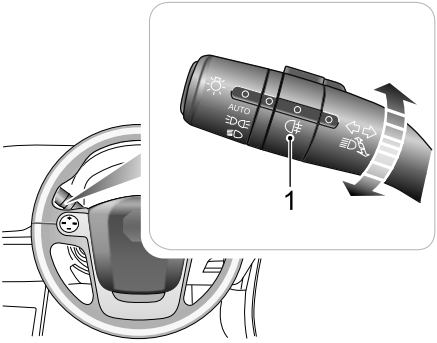

1 Rear Fog Lights

Rear Fog Lights

When the ignition switch is at position 2 and the headlights are switched on, switch the rear fog lights (figure 1) to the ON position, and the rear fog lights will illuminate. The warning light in the instrument pack will illuminate when the fog lights are on.

Direction Indicators /Main Beam Lever

Take care not to dazzle oncoming vehicles when driving using main beam headlights.

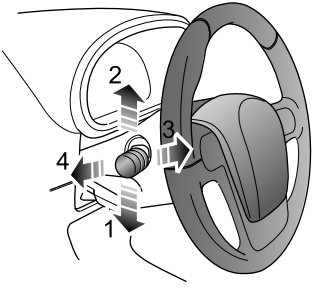

1 Press downward to indicate a left turn

2 Press upward to indicate a right turn

3 Main beam flash

4 Push away for main beam

Direction Indicators

Move the lever down to indicate a LEFT turn (figure 1), or up to indicate a RIGHT turn (figure 2). The indicators will cancel automatically once a turn has been completed.

The corresponding GREEN warning light in the instrument pack will flash in time with the direction indicators. To indicate a lane change, press the lever briefly and release, the indicators will flash three times and then cancel.

Headlight Main and Dipped Beam

When the ignition switch is on and the main beam switch is in position 2, push the lever fully towards the instrument pack (figure 4) to switch on main beam (the BLUE warning light in the instrument pack illuminates). Fully push the lever switch towards the instrument pack (figure 4) to turn off main beam and return to dipped beam headlights.

Headlights Flash

To briefly flash the main beam on and off, pull the lever towards the steering wheel (figure 3) and then release.

Follow Me Home (Headlights Delayed OFF) *

After the vehicle is stopped, turn off the ignition and remove key. Momentarily push or pull the indicator lever switch and release within 1 minute to activate the dipped beam headlamps. The lamps will remain illuminated for approximately 30 seconds. To switch off the lamps during this time period, push or pull the indictor lever switch for a second time.

Daytime Running Lights

The daytime running lights turn on automatically when the ignition switch is in position 2. When the side or headlights are switched on, the daytime running lights are extinguished.

Hazard Warning Lights

Hazard warning switch location is dependent upon trim level.

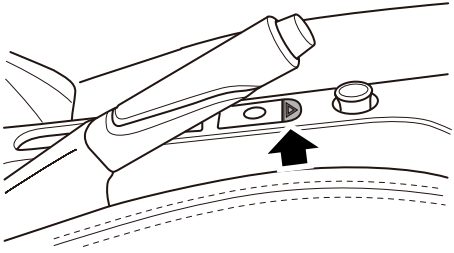

Vehicles fitted with electronic air conditioning feature the switch in the centre console adjacent to the passenger airbag disable switch.

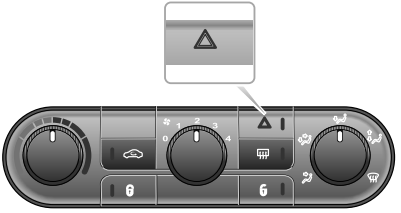

Vehicles fitted with a standard heater feature the switch in the heater control panel (see picture).

Press the button to operate the hazard warning lights, all of the direction indicators will flash together. Press again to switch off.

Headlight Levelling - Manual Adjustment

The angle of the dipped beam is affected by the distribution of passenger and luggage weight within the car.

To ensure correct headlamp aim, and not dazzle on-coming traffic, the headlamp levelling switch position should be adjusted according to the vehicle loading condition in accordance with the following table:

Position	Load
0	Driver, or driver & front passenger
1	All the seats occupied with no load
2	All the seats occupied plus an evenly distributed load in the boot, or driver with full load
3	Driver only, plus an evenly distributed load in the boot

Touring Abroad

If your journey takes you to countries where cars are driven on the opposite side of the road to your country it will be necessary to fit headlamp beam deflectors.

Contact your MG dealer for further details.

Wipers and Washers

Front Windscreen Wiper Controls

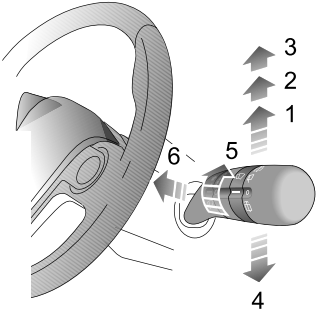

The wipers and washers will operate with the ignition in position 1 or position 2.

Push the lever up to select different wiper speeds:

- Intermittent wipe/automatic wipe (1)
- Normal speed wipe (2)
- Fast speed wipe (3)

IMPORTANT
• Avoid operating the wipers on a dry screen. • In freezing or very hot conditions, ensure that the blades are not frozen or stuck to the glass before being operated. • In winter, remove snow or ice from around the arms and blades, including the wiped area of the screen.

Single Wipe

Pull the lever (4) down and release (if the lever is held down, the wipers will operate at high speed until the lever is released).

Variable Delay - intermittent wipe *

To select intermittent wipe push the lever up to position(1), Rotate the switch (5) to vary the intermittent time of wiper operation.

Rain Sensor *

Some models are equipped with a rain sensor fitted to the inside of the windscreen behind the rear view mirror.

The sensor is able to detect varying amounts of water on the outside of the windscreen. With the wiper control set to intermittent, the variable delay will be adjusted automatically according to the information supplied by the rain sensor.

Note: If the sensor detects constant rain, the wipers will operate continuously. The sensitivity of the sensor can be altered by means of the wiper variable delay.

Front Windscreen Washer

Pull the lever (6) towards the steering wheel - the washers operate immediately. After a short delay, the wipers will commence operating in conjunction with the washers.

Note: The wipers continue operating for a further three wipes after the lever is released. After about 1 second, there will a further wipe to remove any fluid draining down the screen.

Rear Windscreen Wiper Controls

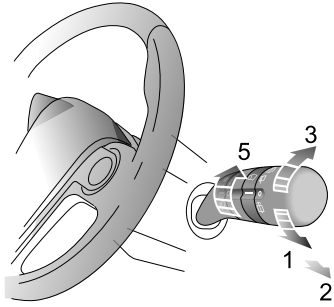

1 Intermittent wipe (1)

2 Wash and wipe (2)

3 Wash and wipe (3)

The rear washer and wiper will work with the ignition switched to auxiliary and ignition on position. It will become isolated during cranking. If the rear wiper switch is turned to intermittent wipe (1), the rear wiper will operate. It will complete 3 continuous wipes before changing to intermittent mode. The time period between the wipes can be increased/decreased via the wiper delay switch *(5). Intermittent wiper speed will vary according to road speed.

If the rear wipe and wash (2) is selected, the rear wiper and washer will operate together, and the rear wiper will move fast. If the switch is released to intermittent wipe (1), the rear washer will stop operating.

If the rear wipe and wash (3) is selected, the rear wiper and washer will operate together. If the switch is released to off position, the rear wiper and washer stop operating.

Note: Vehicles that do not feature the variable intermittent wiper function do not feature road speed adjustment on the rear wiper.

Steering Column

Steering Column Adjustment

DO NOT attempt to adjust the angle of the steering wheel while the car is in motion. This is extremely dangerous.

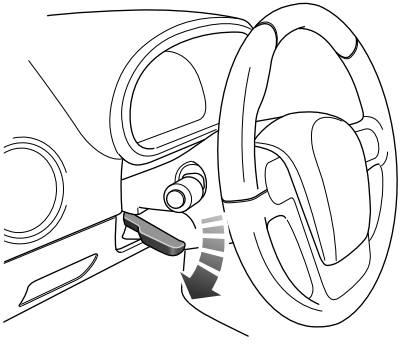

To adjust the angle of the steering column to suit your driving position:

1 Fully release the locking lever.

2 Hold the steering wheel in both hands and tilt the steering column up or down to move the wheel into the most comfortable position.

3 Once a comfortable driving position has been selected, pull the locking lever fully up to lock the steering column into its new position.

Horn

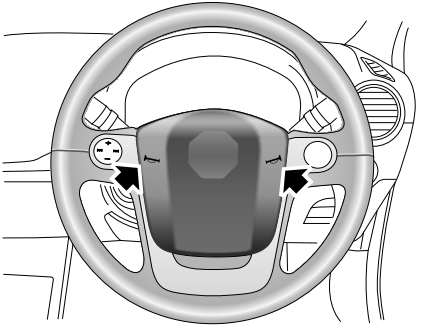

Press the steering wheel pad where arrowed to operate the horn.

Note: The vehicle horn switch and the driver's airbag are located in close proximity on the steering wheel. The illustration shows the position of the horn switch, please ensure that you press in this area to avoid any potential conflict with the operation of the airbag.

Mirrors

Door Mirrors

Note: Objects viewed in exterior mirrors may appear further away than they actually are.

Mirror Glass Electric Adjustment *

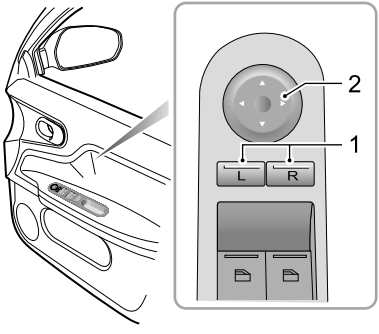

With the ignition switched on, press left (L) or right (R) switch (1) to select the left or right mirror. The switch illuminates. Then, press one of the 4 arrows on the round switch (2) to adjust the angle of the door mirror.

IMPORTANT
• The exterior mirrors are operated with the electric switch, operating the mirror directly by hand may result in the failure of related equipments. • Exterior mirrors are operated with motors. Therefore, flushing with high pressure water jets directly in the car wash may result in the failure of the electric device.

Mirror Glass Manual Adjustment *

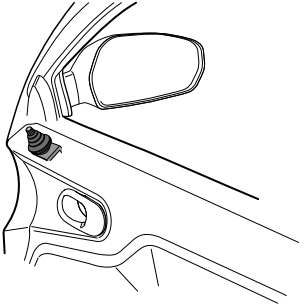

Use the joystick to adjust the mirror glass to achieve the required view.

Heating Elements *

The door mirrors have integral heating elements which disperse ice or mist from the glass. The heating elements operate while the Heated Rear Window is switched on.

Note: The heating elements will only work when the engine is running.

Mirror Folding

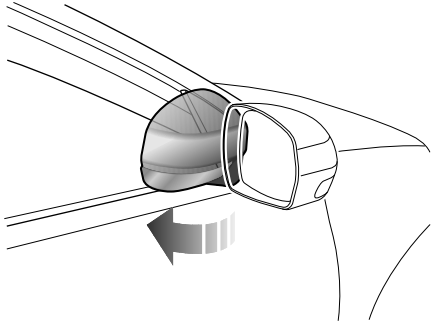

The mirrors can be folded back manually towards the side windows into a 'park' position to enable the car to negotiate narrow openings.

Interior Rear-view Mirror

Before driving, adjust the body of the mirror by hand to achieve the best possible view to the rear. The manual dipping function of the interior rear-view mirror helps to reduce glare from the headlights of following vehicles at night.

Manual Mirror

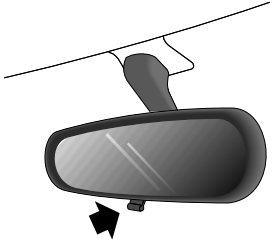

Move the lever at the base of the mirror forward to'dip' the mirror. Normal visibility is restored by pulling the lever back again.

Note: In some circumstances, the view reflected in a 'dipped' manual mirror can confuse the driver as to the precise location of following vehicles.

Sun Visor

The vanity mirror for the driver should only be used when the vehicle is stationary.

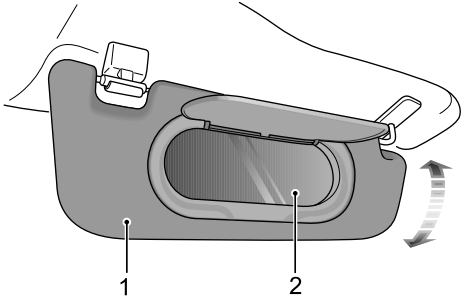

Pivot the sun visor (Figure 1) downward to access the vanity mirror * (Figure 2). Some models require the cover to be lifted to access the mirror.

Windows

Power Operated Window Controls

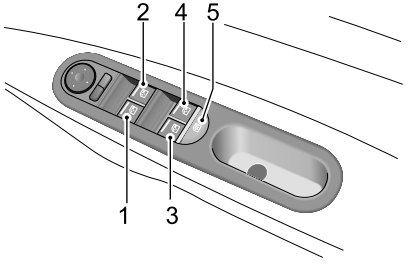

1 Front Left Window Switch

2 Front Right Window Switch

3 Rear Left Window Switch

4 Rear Right Window Switch

5 Rear Window Isolation Switch

Window Operation

Ensure children are kept clear when raising or lowering a window.

Push the switch (1-4) down to lower, and pull the switch up to raise the window. The window will stop moving as soon as the switch is released (unless the 'One-Touch' function is active).

Note: The front and rear passenger windows can also be operated by individual window switches, mounted on each door. The rear window switches will not operate if the rear window isolation switch has been activated.

Note: The electric windows can be operated with the ignition in position I or II (For safety: doors should be closed).

Rear Window Isolation Switch

Press the button (5) to isolate the rear window controls (an indicator light in the button illuminates), press again to restore control.

Note: It is recommended that you ISOLATE the rear window switches when carrying a child.

'One-Touch' Down *

By briefly pressing and then releasing (within half a second) a window switch, the window can be fully opened. Window movement can be stopped at any time by pressing the switch again.

Note: DO NOT operate the switch for more than 20 seconds so as to protect the motor from overheating, the switch will not operate. If this occurs, please wait until the motor cools down.

Interior Lights

Interior Lamp

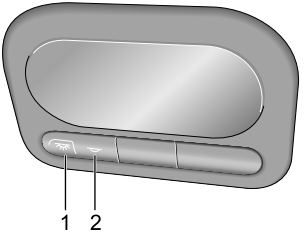

Automatic Operation

The interior light illumination occurs automatically when the door is opened. The interior light remains illuminated for approximately 30 seconds after the doors are closed.

Manual Operation

Press the button 1 to switch the interior light on, press the button 2 to switch off the interior light.

Note: Manual operation is active only when the ignition switched is in position 1 or 2 .

Centre Console Power Socket

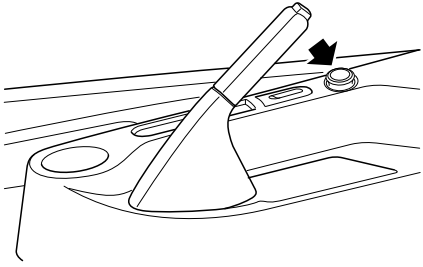

The centre console power socket is located on the centre console (as shown above), remove the plug to expose the centre console power socket.

Note: The centre console power socket voltage supply is 12 V, and the rated power is 120 w.

Storage Equipment

Instructions

- Please close all storage boxes when the vehicle is running. Leaving these storage boxes open may cause personal injury in the emergency start-off, hard brake and car accident.
- Do not place inflammables or disposable cigarette lighters in any storage boxes. The high temperature in summer may ignite the inflammables and disposable cigarette lighters, resulting in fires.

Glovebox

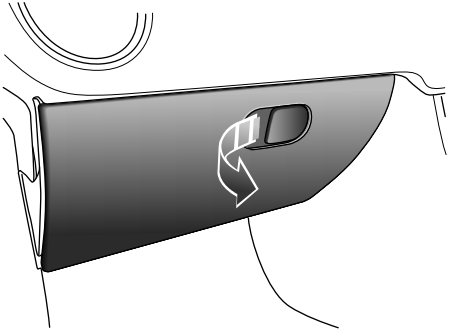

Pull the handle to open the glovebox.

To close the glovebox, raise the lid and push to close. Ensure the glovebox is fully closed when the car is moving.

Storage Box

Instrument Panel Storage Box

DO NOT put flammable substances or liquids in the instrument panel storage box. Ensure the storage box is fully closed when the car is moving.

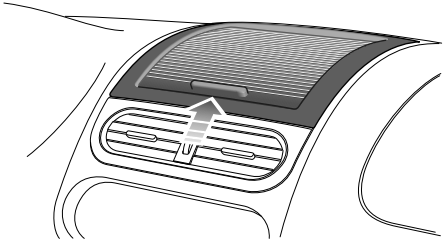

Push the instrument panel storage box cover upward to open.

Pull the instrument panel storage box cover downward to close.

Front Passenger Lower Storage Box *

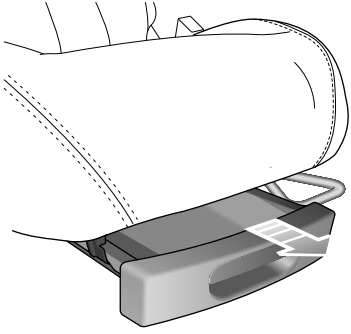

To open, gently lift the handle and pull forward.

To close, push the handle backward.

Cup Holder

DO NOT place open cups in the cup holder. When the car is in motion, the hot drinks may spill and cause injuries.

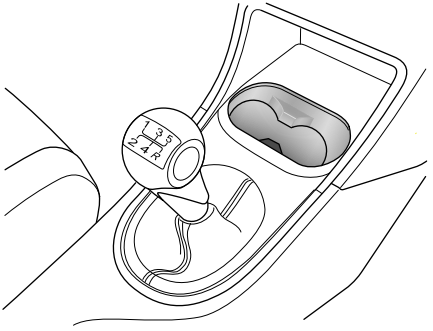

Located at the front of the gear lever is the cup holder for user.

Climate Control

50 Climate Control

Climate Control

Ventilation

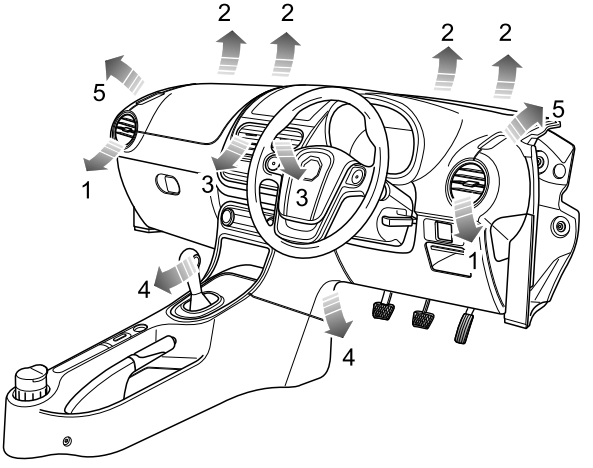

1 Side vents
2 Windscreen vents
3 Centre vents
4 Front seat feet vents
5 Front side window vents

Heating, ventilation and air conditioning system provides fresh or heated air to the interior of the car from the air intake grille in front of the windscreen.

Always keep the air intake grille clear of obstructions such as leaves, snow or ice.

Air outlets are provided to the windscreen, face and feet - the location of those vents is shown in the illustration.

Particle/Pollen Filter

The particle/pollen filter helps to keep the car interior free from pollen and dust. To remain fully effective, the filter should be replaced at the recommended service interval.

Vents

Centre Vents

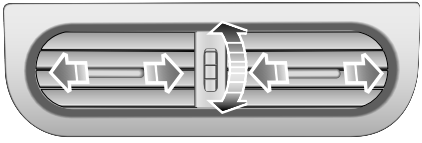

Rotate the thumb-wheel down to close or up to open the vents. Direct the air flow by moving the control in the centre of the louvres.

Note: To increase output from the centre vents, shut the side vents.

Side Vents

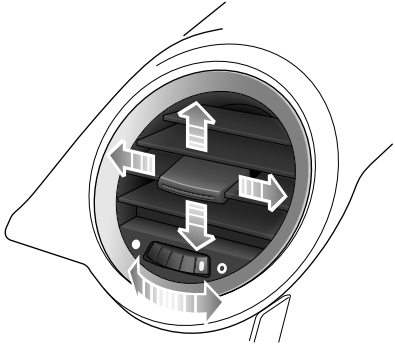

Rotate the thumb-wheel left to close or to the right to open the vents.

Direct the air flow by moving the control in the centre of the louvres up or down, or from side to side.

Note: To increase output from the side vents, close the centre vents.

Heater Controls *

Control Panel

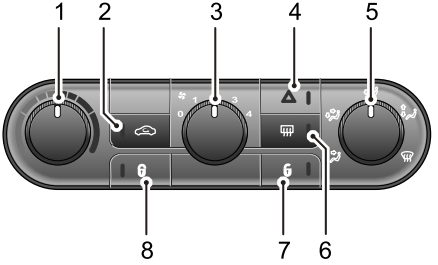

1 Temperature control

2 Air recirculation

3 Blower

4 Hazard warning light

5 Air distribution

6 Heated rear screen

7 Interior lock unlocking

8 Interior lock locking

Blower

Rotate the blower control clockwise to increase the blower speed or rotate anti-clockwise to decrease the blower speed. The blower is switched off when the blower speed is 0, and the blower speed increases gradually from 1 to 4.

Temperature Control

Rotate the TEMP control clockwise to increase the air temperature inside the car or rotate anti-clockwise to decrease.

Air Distribution

Rotate the air distribution, control to select the required air distribution mode .

For 'face'. Directs air to the side and centre vents.

For 'face + feet'. Directs the air to the feet, side and centre vents.

For 'feet'. Directs air to the feet vents.

Note: In this mode, a small amount of air will be directed to the side and windscreen vents.

For 'feet + windscreen'. Directs air to the windscreen and feet vents.

Note: In this mode, a small amount of air will be directed to the side vents.

For 'windscreen'. Directs air to the windscreen vents.

Note: In this mode, a small amount of air will be directed to the side vents.

Heated Rear Screen

The heating elements on the inside of the rear screen are easily damaged. DO NOT scrape or scratch the glass. DO NOT stick labels over the heating elements.

Press to operate; the LED in the switch will illuminate indicating the heated rear screen is switched on. The LED extinguishes when the heated rear screen is turned off. The heated rear screen will switch off automatically after 15 minutes.

Note: The heated rear screen will only function with the engine operating.

Air Recirculation

Press to operate, the LED in the switch illuminates, the air inside the car is recirculated and the air intake is closed, preventing the entry of traffic fumes.

When the engine is off, the air recirculation control flap stays in current position.

Note: Leaving the system in recirculation mode can cause the windscreen to mist. If this happens, switch off recirculation and turn the controls to maximum demisting.

Air Conditioning Controls *

Control Panel

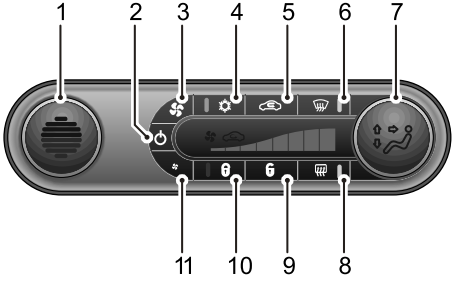

1 Temperature control

2 Power on/off

3 Increase blower speed

4 A/C on/off

5 Air recirculation

6 Defrost/Demist

7 Air distribution

8 Heated rear screen

9 Interior lock unlocking

10 Interior lock locking

11 Decrease blower speed

Blower

Press the button to increase blower speed. When the system is switched off, pressing the button operates the system.

Press the button to decrease blower speed. When the system is switched off, pressing the button operates the system.

Temperature Control

Rotating the temperature control clockwise will increase the air temperature. The control display will gradually change to red. When the temperature control is fully increased, the control display will be totally red.

Rotating the temperature control anti-clockwise will decrease the air temperature. The control display will gradually change to blue. When the temperature control is fully decreased, the control display will be totally blue.

A/C Button

Press the A/C Button to switch the air conditioning system on. Press again to switch off.

Note:

1. ***The air conditioning system can only be switched on after the engine is started;***
2. ***When the air conditioning system is switched off, the system can still provide heating and ventilation function.***
3. ***When the Air conditioning is switched on, the compressor will turn itself "on" and "off".***

Power On/Off

Press the Power on/off button to switch the system off and press again to switch on.

Note: Recirculation status will remain in the setting selected.

Air Distribution

Rotate the air distribution, control to select the required air distribution mode .

For 'face'. Directs air to the side and centre vents.

For 'face + feet'. Directs air to the feet, side and centre vents.

For 'feet'. Directs air to the feet vents.

Note: In this mode, a small amount of air will be directed to the side and windscreen vents.

For 'feet + windscreen'. Directs air to the windscreen and feet vents.

Note: In this mode, a small amount of air will be directed to the side vents.

For 'windscreen'. Directs air to the windscreen vents.

Note: In this mode, a small amount of air will be directed to the side vents.

The modes are 'face' - 'face + feet' - 'feet' - 'feet + windscreen' - 'windscreen' clockwise in order. To make further selections turn counter-clockwise.

Defrost/Demist

With this button pressed, air conditioning is switched on, the blower is set to maximum speed, air distribution is set to windscreen. To switch off defrost/demist, press the button again.

Heated Rear Screen

The heating elements on the inside of the rear screen are easily damaged. DO NOT scrape or scratch the glass. DO NOT stick labels over the heating elements.

Press to operate; the LED in the switch will illuminate indicating the heated rear screen is switched on. The LED extinguishes when the heated rear screen is turned off. The heated rear screen will switch off automatically after 15 minutes.

Note: The heated rear screen will only function with the engine operating.

Air Recirculation

With this button pressed, the icon shows in the display, the air inside the car is recirculated and the air intake is closed, preventing the entry of traffic fumes. Press the button again , the system enters external circulation

When the engine is powered off, the air recirculation control door stays in current position.

Note: Use this function to obtain maximum air conditioning performance and optimum fuel efficiency when A/C is operating.

Audio System

*60 CD Player * (Low Line)*

*70 CD Player * (High Line)*

CD Player * (Low Line)

Use Instructions

1 When cleaning the vehicle, ensure that water does not contact the audio system.

2 Use a soft cloth to clean the display. Use alcohol to remove stubborn dirt. Do not use water, solvent or abrasive cleaner, these substances will damage the display.

3 Do not attempt to play non standard discs, or any shape which is not round. Do not use damaged discs or place any other material into the CD slot.

4 The audio system is designed to operate between the temperatures of -20°C and +70°C.

5 When travelling on rough or uneven roads, disc reproduction may be impaired.

6 Distortion, interference and lack of signal clarity, are often attributed to a fault in the radio. Problems of this kind are usually caused by atmospheric conditions, signal strength, hilly terrain, tall buildings, bridges and even electrical interference from power lines.

7 The USB interface of the player does not support a portable hard drive.

8 The USB interface can support some types of card readers, but we are unable to guarantee that it supports all types of card readers.

9 The USB interface of this player does not support a USB concentrator connection and extended harness.

10 The USB interface of this player may not recognize all USB brands and types, and some files may not be played correctly. In such cases, please contact your MG Authorised Repairer.

IMPORTANT
Only use the CD player when road conditions permit.

CD Player Control Panel

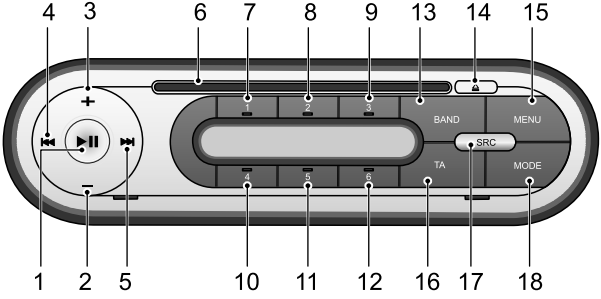

1 On/Off or Pause/Mute
2 Volume Down
3 Volume Up
4 ⏮ (Seek Downward)
5 ⏭ (Seek Upward)
6 CD Slot
7 Preset Button 1
8 Preset Button 2
9 Preset Button 3
10 Preset Button 4
11 Preset Button 5
12 Preset Button 6
13 BAND (Frequency)
14 ⏏ (CD Eject Button)
15 MENU
16 TA (Traffic Announcement)
17 SRC (Source)
18 MODE

Basic Operation

On/Off Power

Press the On/Off button to switch on radio system, and press again to turn off the system.

When the CD player is off, and a CD is loaded, the CD player will switch on.

30 Minutes Play Function

When the ignition is switched off, press the On/Off button to operate the audio unit for up to 30 minutes, after 30 minutes the player will switch off. To switch on again, press the On/Off button.

Mute/Pause

Press the MUTE button to mute the radio. Press again to resume play.

If in CD/USB mode, press the Mute button to pause.

Select Mode

Repeatedly press the SRC button to change the source of the output. The unit will cycle through the following options: TUNER, CD (if there is a disc in the CD player), USB (if USB is connected), and AUX.

Note: CD play can only be selected when there is a disc in the CD player.

Note: USB can only be selected when a USB/bluetooth source is connected.

Volume Adjustment

Press Volume Down button, the volume will decrease by -1, if press and hold the button, the volume will decrease quickly to 0.

Press the Volume Up button, the volume will increase by +1, if press and hold the button, the volume will increase quickly to 30.

Menu Operation

For each press of MENU button, the mode will cycle through Clock, BASS, TREBLE, BALANCE, FADER, EQ, LOUDNESS, AF, REG, CT, EON and TA Volume.

BASS

In BASS mode, press ⏮ button or ⏭ button to adjust the bass effect (adjustment range: -7 - +7).

TREBLE

In TREBLE mode, press ⏮ button or ⏭ button to adjust the treble effect (adjustment range: -7 - +7).

BALANCE

In BALANCE mode, press ⏮ button or ⏭ button to adjust the left-right balance effect (adjustment range: L7 - R7), '0' represents the left-right speaker balance.

FADER

In FADER mode, press ⏮ button or ⏭ button to adjust the front-rear balance effect (adjustment range: F7 - R7), '0' represents the front-rear speaker balance.

EQ

In EQ mode, press ⏮ button or ⏭ button, and select from CLASSIC, ROCK, POPULAR, and OFF.

LOUDNESS

In LOUDNESS mode, press ⏮ button or ⏭ button to stop/start the loudness control.

Alternative Frequencies Setting

Press ⏮ button or ⏭ button to select AF ON or AF OFF.

If the radio station selected supports AF and its signal becomes weak, then the Tuner should be switched to the strongest available frequency.

Region Setting

Press ⏮ button or ⏭ button to select REG ON or REG OFF.

Note: AF shows that the RDS is tuning to the strongest signal for the station you have selected. It returns to a different frequency when you move into another area.

Clock Time Setting

Press ⏮ button or ⏭ button to select CT ON or CT OFF.

Note: CT synchronisation (via RDS) will be automatically deactivated if the user makes manual changes to the clock or date.

Enhanced Other Networks Setting

Press ⏮ button or ⏭ button to select EON LO or EON DX.

Traffic Announcement Volume

Press ⏮ button or ⏭ button to adjust TA volume.

Time Setting

Press MENU button to enter the clock display, press and hold MENU button to enter the clock setting mode, and then press MENU button to access the hour-clock, minute-clock , time display modes (12HR or 24HR), and clock display protection (open or close), press ⏮ button or ⏭ button to make selection

Playing Mode

In CD/USB mode, press MODE button to select the random or repeat playing modes.

In random mode, press ⏮ button or ⏭ button, and select to close or open random mode.

Note: If repeat play is not required, press MODE button twice to confirm the selected random mode.

In repeat mode, press ⏮ button or ⏭ to select single track, folder or close.

Note: If the track has no corresponding information , the information will not be displayed.

Note: If there is no folder in source, the random folder can not be used.

Folder Mode

When in CD/USB, press and hold MODE button to enter the folder selection mode, and press ⏮ button or ⏭ button to select the folder forward or backward.

Note: 4 seconds after the last operation has been made, the system will enter the current playing mode.

Radio Function

Mode Selection

Press SRC button to select radio as the source.

Band Selection

Repeatedly press the BAND button to select FM1, FM2, FMA, MW, MWA frequencies.

Note: If the radio is in stereo, the bottom of the screen will display 'ST'.

Tune

There are 3 tuning modes, which are the search tuning, manual tuning and pre-set tuning.

Search Tuning Mode

press ⏮ button or ⏭ button, the radio automatically searches the frequency range, looking for a radio station of acceptable strength. Once a station is found, that station will be played.

Note: If no station can be found, then the search will be stopped, and the screen will display 'NO STATION'.

Manual Tuning Mode

Press and hold either of the ⏮ button and ⏭ button, and then enter the manual tuning mode, and press ⏮ button or ⏭ button again to search stations.

Note: if no selection is made after 5 seconds manual tuning will be cancelled.

Pre-set Tuning Mode

Up to 30 radio stations can be stored (FM1, FM2, FMA, MW, MWA). Press number buttons 1-6 to select a stored frequency.

Store Station

There are manual and auto store modes.

Manual Store

- Press BAND button to select the desired waveband.
- Use search, manual or pre-set tuning modes to tune to the desired station.
- Press any number button for more than 2 seconds. The frequencies will be automatically stored.

Note: Manual store overwrites any stations which already stored on the pre-set buttons.

Auto Store

- Press BAND button to select the FM/WM frequency.
- Press and hold the BAND button, Auto-store scans the waveband to find the six strongest FM/WM radio frequencies and then stores them in FMA or MWA memory in order of the signal strength.

If auto-store is unable to find six strong stations, the remaining pre-sets are not used.

Note: Automatic storage overwrites any stations already stored on the AST pre-set buttons.

TA (Traffic Announcement)

Press TA button to enable TA function, if the radio is on, the player will search automatically. if current station doesn't support TA, press the TA button again to disable TA. When a TA is received during CD/USB playback, the MIX function (if selected) is cancelled.

CD Playing

The Compact Disc (CD) player fitted to your car will only accept one disc at a time.

Loading a CD

Make sure that the disc is positioned with the label side upwards, then gently push it into the slot until the mechanism draws the disc in fully. CD play will start immediately.

Track Search

1 Press ⏭ button once to skip to the beginning of the next track.

2 If the track elapsed time is more than 1 seconds, Press ⏮ button once to return to the start of the current track and press again to start the previous track. If elapsed time is less than 3 seconds, press ⏮ button once to return to the previous track.

Fast Forward/Rewind

1 Press and hold ⏮ button to fast rewind.

2 Press and hold ⏭ button to fast forward.

Ejecting CD

Press Eject button, the disc will be ejected from the player and can then be removed.

USB

USB Connection

A USB connection is situated inside the centre upper stowage tray located in the fascia.

Insert a USB memory stick via the USB connection.

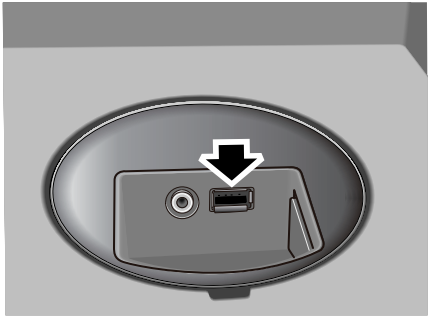

USB Playing

Press ⏭ button once to choose the next track to play.

Press ⏮ button once, if the playing time exceeds 1 second, the track will be played from the beginning, press the button again to select to play the previous track; if the playing time does not exceed 1 second, press ⏮ button once, to play the previous track.

Note: This system can only play .mp3 and .wma format files.

USB Removal

Do not forcibly remove the USB when USB files are displayed, this may cause file damage.

AUX

AUX Input Playing

An AUX device connection (3.5 mm jack socket) is located inside the centre upper stowage tray located in the fascia.

Insert an auxiliary device via the auxiliary socket, after auxiliary is connected.

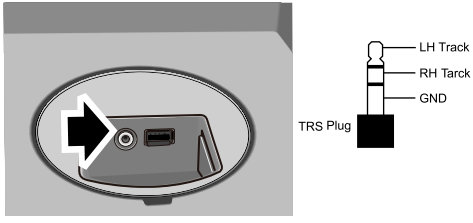

Note: Please use 3.5 mm TRS plugs to connect auxiliary audio.

Antenna

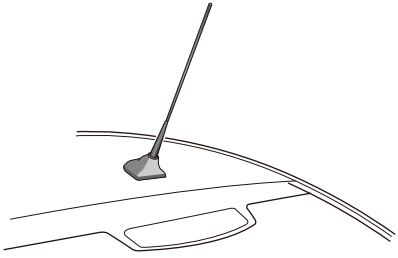

The antenna is located at the rear of the roof. Avoid bending the antenna. However when required, e.g. when using an automatic car washing facility, please ensure that the antenna is removed.

To remove the antenna unscrew the antenna anti clockwise.

CD Player * (High Line)

Use Instructions

1 When cleaning the vehicle, ensure that water does not contact the audio system.

2 Use a soft cloth to clean the display. Use alcohol to remove stubborn dirt. Do not use water, solvent or abrasive cleaner, these substances will damage the display.

3 Do not attempt to play non standard discs, or any shape which is not round. Do not use damaged discs or place any other material into the CD slot.

4 The audio system is designed to operate between the temperatures of -20°C and +70°C.

5 When travelling on rough or uneven roads, disc reproduction may be impaired.

6 Distortion, interference and lack of signal clarity, are often attributed to a fault in the radio. Problems of this kind are usually caused by atmospheric conditions, signal strength, hilly terrain, tall buildings, bridges and even electrical interference from power lines.

7 The USB interface of the player does not support a portable hard drive.

8 The USB interface can support some types of card readers, but we are unable to guarantee that it supports all types of card readers.

9 The USB interface of this player does not support a USB concentrator connection and extended harness.

10 The USB interface of this player may not recognize all USB brands and types, and some files may not be played correctly. In such cases, please contact your MG Authorised Repairer.

IMPORTANT
Only use the CD player when road conditions permit.

CD Player Control Panel

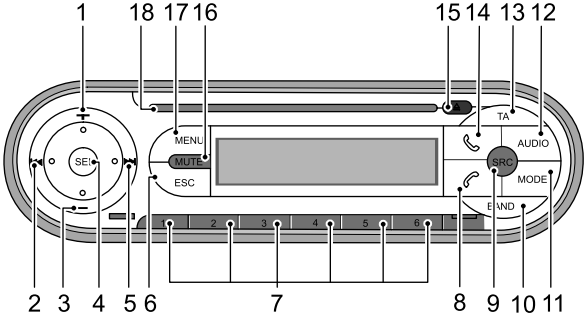

1 Volume Up
2 ⏮ (Seek Downward)
3 Volume Down
4 SEL
5 ⏭ (Seek Upward)
6 ESC
7 Number Button
8 📞
9 SRC (Source) or On/Off
10 BAND (Frequency)
11 MODE
12 AUDIO
13 TA (Traffic Announcement)
14 📞
15 ⏏ (CD Eject Button)
16 MUTE
17 MENU
18 CD Slot

Steering Wheel Control Button

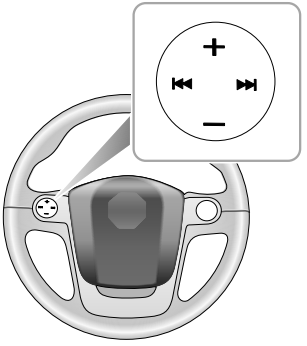

'+' button: volume up

'-' button: volume down

		⏮ (Seek Downward)	⏭ (Seek Upward)
Radio	Short Press	Previous preset in current Band	Next preset in current Band
	Long Press	Previous automatically search the frequency range, looking for a radio station of acceptable strength. Once a station is found, that station will be played.	Next automatically search the frequency range, looking for a radio station of acceptable strength. Once a station is found, that station will be played.
CD/USB /Bluetooth /Audio/Ipod /Iphone	Short Press	Previous track	Next track
	Long Press	Fast rewind	Fast forward

Basic Operation

On/Off Power

Press the On/Off button to switch on radio system, and press again to turn off the system.

When the CD player is off, and a CD is loaded, CD player will switch on.

30 Minutes Play Function

When the ignition is switched off, press the On/Off button to operate the audio unit for up to 30 minutes, after 30 minutes the player will switch off. To switch on again, press the On/Off button.

Mute/Pause

Press the MUTE button to mute the radio . Press again to resume play.

If in CD/USB/bluetooth mode, press the Mute button to pause.

Select Mode

Repeatedly press the SRC button to change the source of the output. The unit will cycle through the following options: radio, CD (if there is a disc in the CD player), USB (if USB is connected), Bluetooth audio (if Bluetooth is connected), and AUX.

Note: CD play can only be selected when there is a disc in the CD player.

Note: USB/bluetooth can only be selected when a USB/bluetooth source is connected.

Volume Adjustment

Press Volume Down button, the volume will decrease by -1, if press and hold this button, the volume will decrease quickly to 0.

Press the Volume Up button, the volume will increase by +1, if press and hold this button, the volume will increase quickly to 30.

Audio Sound Setting

Press the AUDIO button to adjust the sound setting, press ⏮ button or ⏭ button to access BASS, MIDDLE , TREBLE, BALANCE, FADER, EQ, and LOUDNESS. Press the SEL button to access and confirm selection.

BASS

In BASS mode, press ⏮ button or ⏭ button to adjust the bass effect (adjustment range: -7 - +7).

MIDDLE

In MIDDLE mode, press ⏮ button or ⏭ button to adjust the bass effect (adjustment range: -7 - +7).

TREBLE

In TREBLE mode, press ⏮ button or ⏭ button to adjust the treble effect (adjustment range: -7 - +7).

BALANCE

In BALANCE mode, press ⏮ button or ⏭ button to adjust the left-right balance effect (adjustment range: L7 - R7), '0' represents the left-right speaker balance.

FADER

In FADER mode, press ⏮ button or ⏭ button to adjust the front-rear balance effect (adjustment range: F7 - R7), '0' represents the front-rear speaker balance.

EQ

In EQ mode, press ⏮ button or ⏭ button to select from CLASSIC, JAZZ, POP, ROCK, FLAT, VOCAL and OFF.

LOUDNESS

In LOUDNESS mode, press ⏮ button or ⏭ button to stop/start the loudness control.

Clock, Time and Date

Press MENU button to enter, select Clock and Date, press SEL button to enter the date and time setting menu. Press the ⏮ button or ⏭ button to chose the sub-menu and press SEL to access.

Clock or Date Mode

Press SEL button to access clock mode, press the ⏮ button or ⏭ button to access hour-clock, minute-clock

and time display modes (12HR or 24HR). Press SEL button to confirm, press SEL button again to return to the menu after Clock Settings have been confirmed

Press SEL button to access date mode, press the ⏮ button or ⏭ button to access the day, month, year. Press the SEL button to select , press SEL button again to return to the menu interface.

Playing Mode

When in CD/USB mode, press MODE button to select Random , or Repeat and Display Information.

When in random mode, press ⏮ button or ⏭ button to select Random All, Random Folder or Random Off.

When in repeat mode, press ⏮ button or ⏭ button to select Repeat Track, Repeat Folder or Repeat Off.

When in Display Information mode, press ⏮ button or ⏭ button to search Folder No, Track No & Song Elapsed Time, Artist Name, Album Name.

Note: If the track has no corresponding information , the information will not be displayed.

Note: If there is no folder in source, the random folder selection is unavailable.

Folder Mode

When in CD/USB mode, press and hold the MODE button to enter the folder mode, and press ⏮ button or ⏭ button to select folder, press the SEL button to confirm, and start to play the first track within the selected folder.

Note: 4 seconds after the last operation has been made, the system will enter the current playing mode.

Menu Operation

Press the MENU button to access the menu mode. Press ⏮ button or ⏭ button to select RDS Settings, Bluetooth Settings, Contrast Adjustments, DAB Setting.

RDS Settings

In the menu mode, select RDS Settings, Clock and Date, and press the SEL button to enter the RDS settings menu. Press ⏮ button or ⏭ button to select AF , REG , CT , EON , TA Volume.

Alternative Frequencies Setting

Press ⏮ button or ⏭ button to select AF ON or AF OFF, press SEL button to confirm.

If the radio station currently selected supports AF and its signal becomes weak, then the radio should switch to the strongest available frequency.

Region Setting

Press ⏮ button or ⏭ button to select REG ON or REG OFF, press SEL button to confirm.

When REG is on, the radio can change the frequency in the AF list the station. When REG is off, the radio will tune to another station.

Clock Time Setting

Press ⏮ button or ⏭ button to select CT ON or CT OFF, press SEL button to confirm.

If the current selected station carries CT information, the time of the supports will synchronise automaticlly via RDS if CT ON.

Enhanced Other Networks Setting

Press ⏮ button or ⏭ button to select EON LO or EON DX, press SEL button to confirm the EON mode.

Traffic Announcement Volume

Press ⏮ button or ⏭ button to adjust TA volume, press SEL button to confirm.

Bluetooth Settings

In the menu mode, select Bluetooth Settings, and press the SEL button to enter the Bluetooth Settings menu. Press ⏮ button or ⏭ button to select bluetooth function.

Bluetooth Activation

Press ⏮ button or ⏭ button to select Bluetooth ON or Bluetooth OFF, press SEL button to confirm.

Bluetooth Pairing

Bluetooth device name and Bluetooth pairing password can be viewed.

Paired List

To view a record of the last 5 Telephones Paired with the vehicle, Press ⏮ button or ⏭ button to make a selection from the record.

Press SEL button to a paired phone and enter the next submenu. Press ⏮ button or ⏭ button to Manually connect, Sync phone book, Delete records.

Incoming Call volume

Sets the call volume.

Contrast Adjustment

Press ⏮ button or ⏭ button to adjust the contrast, press SEL button to confirm.

DAB Setting

DAB Station List Order

Press ⏮ button or ⏭ button to select List: Alphabetical or List: Ensemble , press SEL button to confirm.

Service Following

Press ⏮ button or ⏭ button to select Service Following ON or Service Following OFF , press SEL button to confirm.

DAB Background Scan

Press ⏮ button or ⏭ button to select Background Scan ON or Background Scan OFF , press SEL button to confirm.

FM/MW

Mode Selection

Press SRC button to select radio.

Band Selection

Repeatedly press BAND button to select FM1, FM2, FMA, MW, MWA DAB1, DAB2, DAB3 bands.

Note: If the radio station is in stereophonic sound , the screen will display 'ST'.

Tune

There are 3 tuning modes, which are the search tuning, manual tuning and pre-set tuning.

Search Tuning Mode

Press ⏮ button or ⏭ button, the radio automatically searches the frequency range, looking for a radio station of acceptable strength. Once a station is found, that station will be played.

Note: If no station exists within the entire band, then the search will be stopped after finishing a cycle, and the screen will display 'NO STATION'.

Manual Tuning Mode

Press and hold either of ⏮ button or ⏭ button, and then enter the manual tuning mode, and press ⏮ button or ⏭ button again to search stations.

Note: 5 seconds after the last button press, the system will leave the manual tuning mode.

Pre-set Tuning Mode

6 stations can be stored in every frequency. Press number buttons 1-6 to select a stored frequency.

Store Station

Manual store and auto store modes.

Manual Store

- Press BAND button to select the desired waveband.
- Use search, manual or pre-set tuning modes to select the desired station.

- Press any numbered button for more than 2 seconds. The current radio frequency will be automatically stored in the pre-set memory.

Note: Manual store overwrites any stations already stored on the pre-set buttons.

Auto Store

- Press BAND button to select the FM/WM frequency.
- Press and hold the BAND button, Auto-store scans the waveband to find the six strongest FM/WM radio frequencies and then stores them in FMA or MWA memory in order of the signal strength.

If auto-store is unable to find six strong stations, the remaining pre-sets are not used.

Note: Automatic storage overwrites any stations already stored on the AST pre-set buttons.

RDS Info.

In radio mode, if the current selection is an RDS station it will display the station names (PS name) and frequency.

Press MODE button to enter the RDS selection screen, press the ⏮ button or ⏭ button, select RDS TXT display, press SEL to confirm and return to the FM display. When the radio station carries RDS TXT the information will be displayed as rolling text within the display.

TA (Traffic Announcement)

Press the TA button to open the TA (Traffic Announcement) function, the radio will search once every 5 seconds for information. Press the TA button again to close.

DAB *

Press the BAND button and select DAB mode, there are 3 DAB bands (DAB1, DAB2, DAB3).

Station Select

DAB has three modes: Ensemble Mode. Alphabetical Mode. Pre-set Tuning Mode

Ensemble Mode

Press MENU button, select and choose Ensemble Mode.

DAB radio stations are found within an ensemble, this will contain a number of radio stations dependent on signal strength.

Press the seek button ⏮ or ⏭ to search for a radio station contained within an ensemble, when all the available stations have been accessed the audio unit will select the next ensemble.

Alphabetical Mode

Press MENU button, select and choose Alphabetical Mode.

In Alphabetical Mode press the seek button ⏮ or ⏭ to select DAB radio stations Alphabetically.

Pre-set Tuning Mode

Six radio stations can be stored within the audio unit. select button 1-6 to access a stored frequency.

Store Station

There is manual store mode.

Manual Store

- Press the BAND button to select the desired waveband.
- Use search, Ensemble Mode, Alphabetical Mode or Pre-set Tuning Mode to tune into the desired station.
- Press any number button for more than 2 seconds. The frequencies will be automatically stored.

Note: Manual store overwrites any stations already stored on the pre-set buttons.

Ensemble and Station List View

When in DAB mode press the MODE button to display a list of ensembles. Press the seek ⏮ or ⏭ button to

cycle through the available ensembles, press SEL to confirm selection. Having selected an ensemble, press MODE to display a list of stations available on the selected ensemble. Press ESC to return to the previously selected station.

You can view the list in Ensemble or the Alphabetical Mode.

CD Playing

The Compact Disc (CD) player fitted to your car will only accept one disc at a time.

Loading a CD

Make sure that the disc is positioned with the label side upwards, then gently push it into the slot until the mechanism draws the disc in fully. CD play will start immediately.

Track Search

1 Press ⏭ button once to skip to the next track.

2 If the track elapsed time is more than 3 seconds, Press ⏮ button once to return to the start of the current track and press again to start the previous track. If elapsed time is less than 3 seconds, press ⏮ button once to return to the previous track.

Fast Forward/Rewind

1 Press and hold ⏮ button to fast rewind, once the button is released the track will resume normal play.

2 Press and hold ⏭ button to fast forward, once the button is released the track will resume normal play.

Ejecting CD

Press Eject button, the disc will be ejected from the player and can then be removed.

USB

USB Connection

A USB connection is situated inside the centre upper stowage tray located in the fascia.

Insert a USB device into the USB connection.

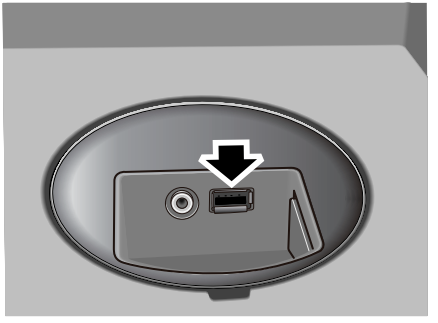

USB Playing

Press ⏭ button once to choose the next track to play.

Press ⏮ button once, if the playing time exceeds 3 seconds, the track will be played from the beginning, and then press this button again to select to play the previous track; if the playing time does not exceed 3 seconds, then press ⏮ button once, to directly play the previous track.

Press and hold ⏮ button or ⏭ button to fast rewind or fast forward, once the button is released the track will resume normal play.

Note: This system can only play .mp3 and .wma format files.

USB Removal

Do not forcibly remove the USB when USB files are displayed, as this may cause file damage.

iPod/iPhone®

iPod/iPhone® Connection

Once the iPod/iPhone® is inserted into the USB socket , Track playback will start immediately.

If the iPod/iPhone® has already been connected and its details are stored in the player, then the last known track and position will be played.

iPod/iPhone® Playing Mode

Press MODE button to select Random or Repeat and Display Information.

Press ⏮ button or ⏭ button to make any further selection.

Note: For more information, refer to the section 'Basic Operation' in 'Playing Mode' chapter.

Removal of iPod/iPhone®

If the iPod/iPhone® has been removed , the CD player will display on the radio interface.

AUX

AUX Input Playing

An AUX device connection (3.5 mm jack socket) is located inside the centre upper stowage tray located in the fascia.

Insert an auxiliary device via the auxiliary socket, after auxiliary is connected, then unit will play the Audio.

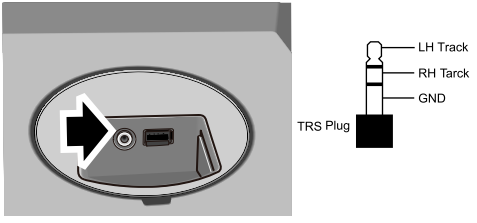

Note: Please use 3.5 mm TRS plugs to connect auxiliary audio.

Bluetooth

Pairing

The Bluetooth system device is name tagged "MG3 CARKIT-******".

Use your mobile telephone to search for an available Bluetooth device. When your telephone finds the "MG3 CARKIT-******", connect (pair) via the telephone.

When you are requested to enter a PIN code, input "****" into your telephone.

Bluetooth Connection

Before using the bluetooth function, please ensure that the bluetooth connection is enabled within the audio unit (see Bluetooth Setting, Basic Operation). It will be used to a mobile phone if your Bluetooth enabled.

To access the Bluetooth Function, please refer to the chapter, Bluetooth Settings can be accessed via the menu function.

When a mobile phone has been successfully paired with the audio unit. The audio unit screen will display that the phone is connected.

If Bluetooth is enabled on the phone and radio unit (the phone is in the top 2 of the paired list, and no other device is already connected to the unit), the phone will connect automatically.

Phone Book Download

Once your telephone is connected, the synchronisation phonebook window will be displayed, you can choose to synchronise your phone book contacts, (if you don't want to synchronise your contacts immediately, you can operate the synchronisation phone book function in the phone book menu later).

Bluetooth Music

Press the SRC button and select Bluetooth music play mode, play the track on your mobile.

You can fast-forward and rewind music selections, along with random and repeat play function (not all mobile phones will support this function).

Accept/Reject Incoming Call

When receiving a call, current audio status will be paused, the callers number and name will be displayed, press the button to access or press button to reject the call.

Bluetooth Function Menu

Press button to enter the Bluetooth function menu, press ⏮ button or ⏭ button to select from Call history, Phonebook, Dial number, Bluetooth settings.

Call History

Press SEL button to access the call history menu, if the phonebook has not been synchronised, you will be prompted to synchronise. Once synchronised, all call records can be viewed. Press the SEL button to confirm synchronization, and view Missed calls, Incoming calls, Outgoing calls. Press the ⏮ button or ⏭ button to select and press the SEL button to enter the phone records.

Phonebook

Press SEL button to access the phone book menu, press the ⏮ button or ⏭ button to select functions full list or phonebook search.

To search the phonebook, press the ⏮ button or ⏭ button to search for names or select the first letter, press SEL button to confirm, to enable search name.

Dial Number

Press the SEL button to enter the telephone keypad, press the ⏮ button or ⏭ button to select numbers, press the SEL button to confirm selection, press button to make a telephone call. If the wrong number is selected, select DEL and press SEL button to delete selection.

Bluetooth Setting

Refer to the chapter of Bluetooth Settings which is in the Menu Function.

Antenna

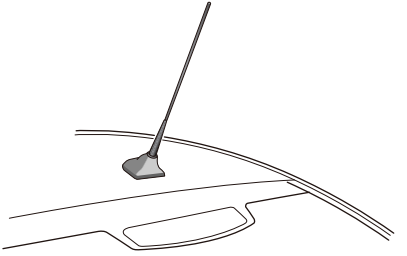

The antenna is located at the rear of the roof. Avoid bending the antenna. However when required, e.g. when using an automatic car washing facility, please ensure that the antenna is removed.

To remove the antenna unscrew the antenna anti clockwise.

Seats & Restraints

88 Seats

92 Seat Belts

95 Airbag Supplementary Restraint System (SRS)

103 Child Restraints

Seats

Correct Seating Position

To avoid the risk of loss of control and personal injury, DO NOT adjust the seats while the car is moving.

Take care when adjusting the height of the driver's seat - the feet of the rear passenger could become trapped when the seat is lowered.

DO NOT allow front seat occupants to travel with the seat backs reclined steeply rearwards. Optimum benefit is obtained from the seat belt with the backrest angle set to approximately 25° from the upright (vertical).

The driver and front passenger seats should be positioned as far rearward as practical. A properly adjusted seat helps reduce the risk of injury from sitting too close to an inflating airbag.

Ideally the seat should be positioned so that the steering wheel can be held with the arms slightly bent and the seat back in a nearly upright position. Make sure your driving position is comfortable and enables you to maintain full control of the vehicle.

Head Restraints

Adjust the head restraint so that the top of the head restraint is in line with the top of the occupant's head and the back of the occupant's head is as close as possible to the head restraint.

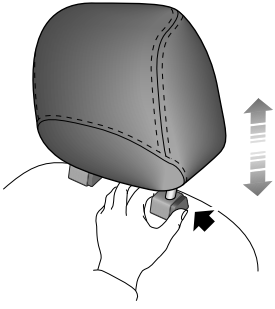

Head restraints are designed to prevent rearward movement of the head in the event of a collision or heavy braking, thereby reducing the risk of head and neck injuries.

Press the button (arrowed) and push the head restraint downwards to lower its position, or lift the head restraint to raise its position. The head restraint can be removed by lifting fully upwards.

Manual Front Seat

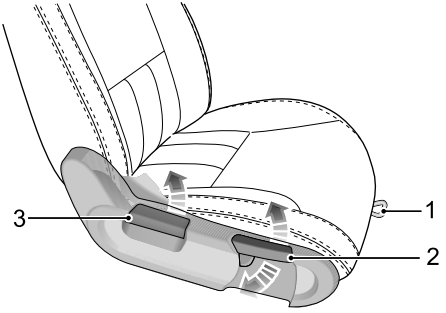

1 Forward/rearward adjustment

2 Height adjustment *

3 Backrest adjustment

Forward/Rearward Adjustment

Lift the lever (1), slide the seat into position and release the lever. Make sure the seat is locked in position before driving.

Height Adjustment *

Pull the lever (2) upwards with a pumping action to raise the seat as required. Press down on the lever with a pumping action to lower the seat.

Backrest Adjustment

Lift the lever (3) and allow the seat to move, tilt the backrest to the desired position.

Folding the Rear Seats

DO NOT carry objects on the rear parcel shelf - they could become dangerous projectiles in the event of an accident.

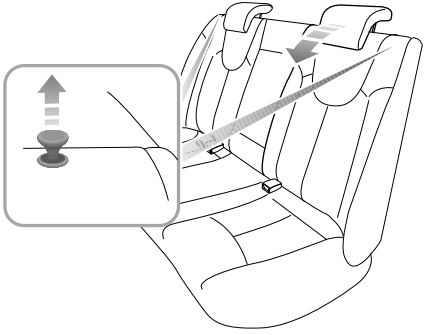

DO NOT carry unsecured equipment, tools or luggage that could move, causing personal injury in the event of an accident, or emergency maneuver - where possible, use the seat belts to secure luggage carried on seats.

To increase luggage space, fully lower all head restraints, pull up release catches and fold the seat backrest forward.

Rear Seat Backrests 'Latch Secure' Indicators

Ensure that the rear seat backrests are securely latched in the upright position when the seat is in use and when loads are carried in the load space.

When returning the seat to the upright position, ensure that the catches are engaged and that the red strip is not visible - this confirms that the backrest is secure.

Note: When returning the seat to the upright position, ensure that the seat belts are not trapped.

Seat Belts

Seat Belts

The airbag supplementary restraint system (SRS) is designed to add to the overall effectiveness of the seat belts. It does not replace them. SEAT BELTS MUST ALWAYS BE WORN!

Ensure that all seat belts are worn correctly - an improperly worn seat belt increases the risk of death or serious injury in the event of a collision.

The seat belts fitted to your vehicle are intended for use by adult sized persons. Each belt is intended for one person only.

IMPORTANT

- DO make sure all passengers are securely strapped in at all times - even for the shortest journeys.
- ALWAYS adjust seat belts to eliminate any slack in the webbing. To be fully effective, the seat belt must remain in full contact with the body at all times.
- ALWAYS fit the lap strap as low on the hips as possible (never across the abdomen), and ensure that the diagonal belt passes across the shoulder without slipping off or pressing on the neck.
- DO NOT wear seat belts over hard, sharp or fragile items in clothing, such as pens, keys, spectacles etc.
- During pregnancy, women should wear the lap belt across the hips below the baby.

Fastening the Belt

DO NOT attach any additional device to the seat belt in any way which may impede its operation.

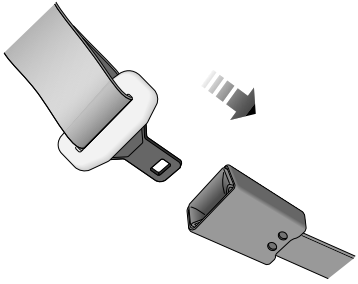

Pull the seat belt steadily over the shoulder and across the chest and, ensuring the webbing is not twisted, insert the metal tongue plate into the buckle nearest the wearer. A 'click' indicates that the belt is securely locked.

Releasing the Belt

Press the red button on the seat belt buckle to release the belt.

Checking Seat Belts

- With the seat belt fastened, give the webbing nearest the buckle a quick pull - the buckle should remain securely locked.
- Unreel the webbing to the limit of its travel. Check that webbing is free from snags and cuts and further check for visual signs of wear or fraying. Allow the webbing to retract, checking that retraction is smooth, continuous and complete.
- With the webbing half unreeled, hold the tongue plate and give it a quick forward pull - the mechanism must lock automatically and prevent any further unreeling.

If a seat belt fails any of these tests, contact your MG Authorised repairer for inspection at the earliest opportunity.

Replacing Seat Belts

Always replace a seat belt assembly where the webbing shows signs of fraying.

Regularly inspect the belt webbing for signs of fraying, cuts and wear; also pay particular attention to the condition of the fixing points and adjusters.

Seat Belt Pre-tensioners

The seat belt pre-tensioners will only be activated once and then MUST BE REPLACED. Failure to replace the pre-tensioners will reduce the efficiency of the car's front restraint systems.

The seat belt pre-tensioners activate in conjunction with the airbag to provide additional protection in the event of a severe frontal impact. The pre-tensioners automatically retract the seat belts. This reduces the forward movement of the belt wearer in the event of a severe collision.

Note: The seat belt pre-tensioners will NOT be activated by minor impacts.

The seat belt pre-tensioners are located inside the front seat belt reels.

The airbag warning light on the instrument panel will alert the driver to any malfunction of the seat belt pretensioners (see 'Airbag Warning Light').

If the pre-tensioners have been activated, the seat belts will still function as restraints, and must be worn in the event that the vehicle remains in a drivable condition.

IMPORTANT
• The removal or replacement of a pre-tensioner must be carried out by MG Motor trained, dealer technicians. • 10 years from the initial date of registration (or installation date of a replacement seat belt pre-tensioner), some components will need to be replaced. The appropriate page of the Warranty and Maintenance Manual must be signed and stamped once the work has been completed.

Airbag Supplementary Restraint System (SRS)

Airbags

The airbag SRS provides ADDITIONAL protection in a severe impact only. It does not replace the need to wear a seat belt.

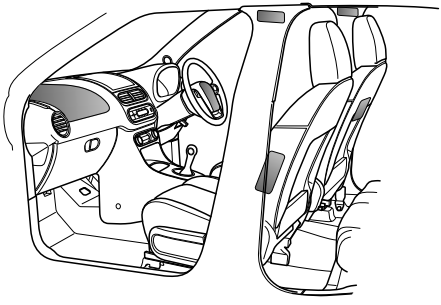

The SRS system incorporates front and side airbags and side head impact protection airbags for both the driver and front seat passenger.

The front airbags are located in the centre pad of the steering wheel and in the fascia panel above the glovebox.

Side airbags are positioned in the backrest padding on the outward side of both front seats.

Side head impact protection airbags are situated behind the headlining above the doors.

Note: The front airbags are not designed to operate as a result of rear collision, minor frontal or side impacts, or if the vehicle overturns; nor will it operate as a result of heavy braking.

Note: Inflation and deflation of the front airbags takes place very quickly and will not protect against the effects of secondary impacts that may occur.

Provided the front seat occupants are correctly seated and with seat belts properly worn, the airbags will provide additional protection to the chest and facial areas in the event of the car receiving a severe frontal impact.

Side airbags and side head impact protection airbags are designed to offer additional protection to the side of the body facing the impact, if a severe side collision occurs.

IMPORTANT
• Even if the vehicle is equipped with airbags, you should always wear seat belts to reduce the risk of severe casualty in the event of a collision. Wearing seat belts helps reduce the possibility of hitting or being pushed away from, any object in the interior of the car. The airbags are supplementary protection to seat belts. They are an aid to, NOT replacement of, seat belts. • The airbags together with the lap and 3-point seat belts provide optimum protection for adults, but not for children. Children should be protected by child restraints.

Airbag Deployment

To minimise the risk of accidental injury from inflating airbags, seat belts should be worn correctly at all times. In addition, both driver and front seat passenger should adjust their seat to provide sufficient distance from the front airbags. If side airbags/side head impact protection airbags are fitted, both driver and front seat passenger should be seated to maintain sufficient distance from the upper part of the body to the sides of the vehicle, this will ensure maximum protection when the side airbags/side head impact protection airbags are deployed.

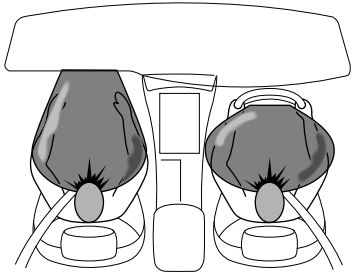

In the event of a collision, the airbag control unit monitors the rate of deceleration or acceleration induced by the collision, to determine whether the airbags should be deployed.

Operation of the airbag is not dependent on the speed of the car, but on the type and size of object hit, angle of impact and the rate at which the car changes speed as a result of a collision. Deployment of the airbag is not dependant on the amount of damage to the vehicle.

In the case of a severe frontal collision, both front airbags will be deployed. In the case of a severe side collision, only the side airbag and side head impact protection airbag on the impact side of the vehicle will inflate.

However, there may also be impact conditions whereby one set of side and both front airbags deploy at the same time, or where front and side airbags respond separately as a result of a secondary impact occurring after the initial collision has taken place.

Airbag inflation is virtually instantaneous and occurs with considerable force, accompanied by a loud noise. The inflated bag, together with the seat belt restraint system, limit the movement of a front seat occupant, thereby reducing the risk of injury to the head and upper torso.

Note: When an airbag inflates, a fine powder is released. This is not an indication of a malfunction, however, the powder may cause irritation to the skin and should be thoroughly flushed from the eyes and any cuts or abrasions of the skin. After inflation, airbags deflate immediately. This provides a gradual cushioning effect for the occupant and also ensures that the driver's forward vision is not obscured.

IMPORTANT
• Obstructions between an airbag and the occupant may affect the correct deployment of the airbag. Obstructions must not interfere with the airbag inflation passages. Accessories must not be attached to or obscure an airbag. • Front seat passengers should not place feet, knees or any other part of the body in contact with, or in close proximity to, a front airbag. • An inflating airbag can cause facial abrasions and other injuries if the occupant is too close to the airbag at the time of its deployment.

Front Seat Side Airbags

Ensure sufficient distance exists between the driver and front passengers' torsos and the side of the vehicle to ensure correct deployment of the front side airbags.

Front seat side airbags are designed to protect the head and chest and will be deployed in the event of the car receiving a severe side impact. It will not be deployed in the event of a front or rear impact.

In the event of a severe impact on one side of the vehicle, the seat side airbag will be deployed from the side of the seat, on that side of the vehicle, to provide a cushion of air to protect the front seat occupant. The seat side airbag on the other side of the vehicle will not be deployed.

Seats with side airbags can be identified by an 'Airbag' marking on the side of the seat backrest.

Note: The manufacture and material of the seat is important to ensure correct operation of the seat side airbags. Do not fit seat covers unless they are

approved by the manufacturer. Contact your MG Authorised Repairer to repair or replace front seats.

Side Head Impact Protection Airbags

Ensure sufficient distance exists between the driver and front passengers' torsos and the side of the vehicle to ensure correct deployment of the side head impact protection airbags.

Side head impact protection airbags are designed to protect the head and neck and will be deployed in the event of the car receiving a severe side impact. It will not be deployed in the event of a front or rear impact.

In the event of a severe impact on one side of the vehicle, the side head impact protection airbags will be deployed from the roof, on that side of the vehicle, to provide a cushion of air to protect the front seat occupant. The side head impact protection airbags on the other side of the vehicle will not be deployed.

Airbag Warning Light

DO NOT service, repair, replace, modify or tamper with any part of the airbag, or wiring in the vicinity of an airbag component; this could cause the system to activate, resulting in personal injury.

A warning light, mounted on the instrument pack, will alert you to any malfunction of the airbags/pretensioners. The light will illuminate as a system check when the ignition is switched to position 2 and will extinguish after approximately 6 seconds.

If any of the following symptoms occur, the system should be inspected by your MG Authorised Repairer.

- The warning light fails to illuminate when the ignition switch is in position 2.
- The warning light fails to extinguish within approximately six seconds after the ignition switch is in position 2.
- The warning light illuminates while the car is being driven.

Disabling the Passenger Airbag *

The Passenger Airbag should only be disabled when a rear facing child seat is fitted to the front passenger seat.

When an adult is seated in the front passenger seat, ensure that the airbag is switched on.

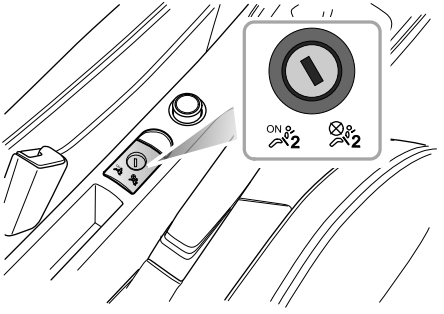

Where fitted the airbag disable switch is located in the centre console. To disable the passenger airbag, insert the key blade into the switch.

When the switch is turned to this position, it indicates that the passenger airbag has been disabled.

When the switch is turned to this position, it indicates that the passenger airbag is enabled.

Passenger Airbag Off Warning Light *

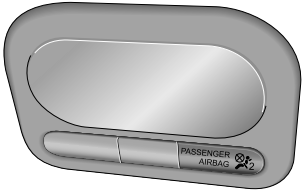

The warning light is located in the interior light assembly. If the passenger airbag has been disabled, the light will illuminate until the airbag is enabled, Once the passenger airbag has been enabled, the light will extinguish.

Special Notice

DO NOT fit or modify an airbag. Any changes to the vehicle structure or airbag system wiring harness are strictly prohibited.

Always contact your MG Authorised Repairer if:

- an airbag which inflates in an accident needs repair and maintenance.
- any part of an airbag module cover show signs of deterioration or damage, there may be a potential safety hazard.

IMPORTANT
• The removal or replacement of an airbag module must be carried out by an MG Authorised Repairer. • After 10 years from the initial date of registration (or installation date of a replacement airbag), some components will need to be replaced by an MG Authorised Repairer. The appropriate page of the Warranty and Maintenance Manual must be signed and stamped once the work has been completed.

Disposing of the Vehicle

When selling your vehicle, you must make sure that the new owner knows that the vehicle is equipped with airbags, and the date of the airbag system replacement.

Uninflated airbags are potentially very dangerous and must be safely deployed in a controlled environment by qualified personnel, before a vehicle is scrapped.

Child Restraints

Children must be secured in the vehicle in a child restraint system appropriate for weight and size.

DO NOT put the child on the lap or in arms when sitting in any seat.

The ISOFIX anchorages in the rear seat are designed for use with ISOFIX systems only.

When installing and using any child restraint system, always follow the manufacturer's instructions.

NEVER use a rearward facing child restraint on a seat protected by an ACTIVE AIRBAG in front of it, DEATH or SERIOUS INJURY to the CHILD can occur.

Failure to follow the advice could result in serious injury or even death of the child.

Child Restraint Instructions

It is recommended that children below the age of 12 years old should be seated on the rear seat of the vehicle, in a child restraint system appropriate to the children's weight and size.

It is recommended that a child restraint system that complies with UN ECE R44 standard are fitted in this vehicle. Check markings on the child restraint system.

Children are more vulnerable than adults to an inflating airbag. It is recommended that children below the age of 12 years old are seated in the rear seats.

Infants less than 2 years old should be restrained in an infant child restraint system.

There are a number of child restraint systems available of different type and specification. For optimum protection, it is recommended that you choose restraint systems appropriate to the child's age and weight.

It is important to comply with installation instructions supplied by the child restraint manufacturer and that child restraint system is properly secured to the vehicle. Failure to follow these instructions may cause death or serious injury to the child in an event of a sudden stop or accident.

Note: Use an appropriate child restraint system until the child becomes large enough to be properly restrained by the vehicle's seat belts.

Note: DO NOT install a rear facing child restraint system in the front passenger seat, unless the front passenger airbag has been deactivated or when an airbag manual deactivation switch is not fitted to the vehicle.

Note: Front passenger seat must be positioned fully rearwards for installation of rear facing child restraint systems.

Note: Some rear facing child restraint system installations in the rear seat may require forward adjustment of the front seat.

Note: Seat head restraints may need to be adjusted or removed for installation of some forward facing child restraint systems.

Note: Rear parcel shelf may need to be temporarily detached to enable Top tether access to the anchorage in the rear of the seat back.

IMPORTANT
• It is recommended that a child restraint system that complies with UN ECE R44 standard is fitted in this vehicle. Check markings on the child restraint system. • It is recommended that children should always be seated in the rear of the vehicle in a child restraint system. If it is necessary for a child to travel in the front, it is essential that the seat is set fully rearwards and upright seatback and the child is secured in a FORWARD FACING child restraint system. • Remember that in the event of a collision or heavy braking a child restraint system that is not correctly fitted could move and injure other occupants. Make sure that a child restraint system is properly secured even if no child is currently using it.

Approved Child Restraint Positions (for Non-ISOFIX Child Restraints)

If vehicle is not equipped with passenger airbag disable switch, rearward facing child restraints MUST NOT be installed on the front passenger seat.

Weight Group	Seating Positions				
	Front Passenger			Rear Outboard	Rear Centre
	Without Passenger Airbag Disable Switch	With Passenger Airbag Disable Switch			
		Airbag ON	Airbag OFF		
0 (up to 10 kg)	X	X	U	U	X
0+ (up to 13 kg)	X	X	U	U	X
I (9 to 18 kg)	X	X	U	U	X
II (15 to 25 kg)	U	U	U	U	X
III (22 to 36 kg)	U	U	U	U	X
U = Suitable for 'Universal' category restraints approved for use in this mass group. X = Seat position not suitable for children in this mass group.					

Approved Child Restraint Positions (for ISOFIX Child restraints)

Weight Group	Size Class	Fixture	ISOFIX Positions
			Rear Outboard
Carrycot	F	ISO/L1	X
	G	ISO/L2	X
0 (up to 10 kg)	E	ISO/R1	IL
0+ (up to 13 kg)	E	ISO/R1	IL
	D	ISO/R2	X
	C	ISO/R3	X
I (9 to 18 kg)	D	ISO/R2	X
	C	ISO/R3	X
	B	ISO/F2	IUF
	B1	ISO/F2X	IUF, IL
	A	ISO/F3	IUF
II (15 to 25 kg)	N/A	N/A	X

Weight Group	Size Class	Fixture	ISOFIX Positions
			Rear Outboard
III (22 to 36 kg)	N/A	N/A	X

IUF = Suitable for ISOFIX forward-facing child restraint systems of universal category approved for use in this mass group.
IL = Suitable for particular ISOFIX child restraint systems (CRS) given in the attached list. These ISOFIX CRS are those of the 'specific vehicle', 'restricted' or 'semi-universal' categories.
X = No ISOFIX child restraint system approved in this weight class.

ISOFIX size class and seat device

- A – ISO/F3 = Forward-facing child restraint system
- B – ISO/F2 = Forward-facing child restraint system
- B1 – ISO/F2X = Forward-facing child restraint system
- C – ISO/R3 = Rear-facing child restraint system
- D – ISO/R2 = Rear-facing child restraint system
- E – ISO/R1 = Rear-facing child restraint system
- F – ISO/L1 = Left Lateral Facing position CRS (carry-cot).
- G – ISO/L1 = Right Lateral Facing position CRS (carry-cot).

Note: For Child Restraints of Class R, the front seat may require forward adjustment for some rearward facing child restraint system installation.

List of Approved Child Restraints Systems

Weight Group	Size class	CRS name	Fixture	Type	Category
0+ (up to 13 kg)	E	Britax Baby Safe Plus with support seat frame	ISO/R1	Rear Facing	Semi-universal
1 (9 to 18 kg)	B1	Britax Duo Plus with Top Tether	ISO/F2X	Forward Facing	Universal

ISOFIX Child Restraint Systems

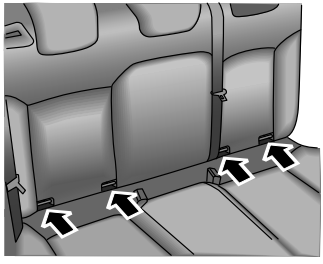

Fasten vehicle-approved ISOFIX child restraint systems to the mounting brackets.

When using ISOFIX mounting brackets for seat mounting, universally approved child restraint systems for ISOFIX may be used.

Top-tether Child Restraint Systems

Child restraint anchorages are designed to withstand only those loads imposed by correctly fitted child restraints. Under no circumstances are they to be used for adult seatbelts, harnesses, or for attaching other items or equipment to the vehicle.

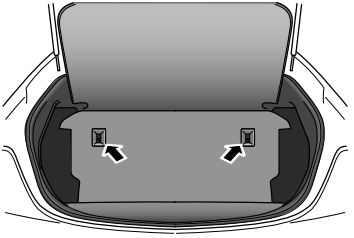

- Fasten the Top-tether of the child restraint system to the anchor at the rear of the rear passenger seat backrest.

Note: When using seat mounting, universally approved child restraint systems, Top-tether must be used.

Note: Please refer to the child restraint system manufacturer's instructions for details.

Starting & Driving

112 Key

115 Child-Proof Locks

116 Alarm System

121 Starting and Driving

125 Economical and Environmental Driving

128 Catalytic Converter

130 Fuel System

133 Manual Transmission

134 Brake System

139 Stability Control System (SCS) and Traction Control (TC)

141 Stop/Start Intelligent Fuel Saving System

145 Cruise Control System *

147 Parking Aid - PDC (Parking Distance Control) *

149 Tyre Pressure Monitoring System (TPMS)

151 Load Carrying

Key

Introduction

Please keep the spare key in a safe place - not in the car!

It is recommended that spare keys are not kept on the same key ring, since this may cause interference and prevent correct key recognition and therefore prevent the engine from starting.

The remote key contains delicate electronic components and must be protected from impact and water damage, high temperature and humidity, direct sunlight and the effects of solvents, waxes and abrasive cleaners.

Different key kits are provided according to car configurations. One kit includes a remote key and a mechanical key; and the other kit includes two mechanical keys. They can open all locks.

The keys supplied with your car are programmed to your security system. If a key has not been programmed according to your car, it cannot start the engine.

The remote key only works within a certain range. Its work scope is sometimes influenced by the key battery condition, physical and geographical factors. For safety consideration, after you lock your car by the remote key, please recheck if the car is locked.

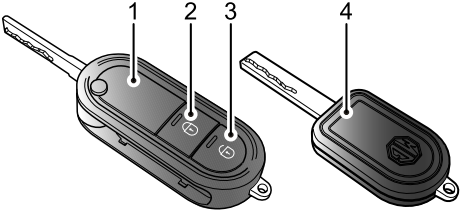

1	Remote key	3	Unlock button
2	Lock button	4	Mechanical key

If your key is lost/stolen or broken, a replacement can only be obtained from an MG Authorised Repairer. The lost/stolen key can be deactivated. If the lost key is found, MG Authorised Repairers can reactivate it.

Note: Replacement keys are only available via MG Authorised Repairer.

Note: The new key cannot be offered to you immediately because it needs some time to match the new key with the vehicle by MG Authorised Repairer.

Remote Key Battery Removing and Refitting

If the battery needs replacing, the engine immobilisation warning light in the instrument pack flashes whenever the remote key is operated (see warning lights and indicators in Instruments and Controls chapter).

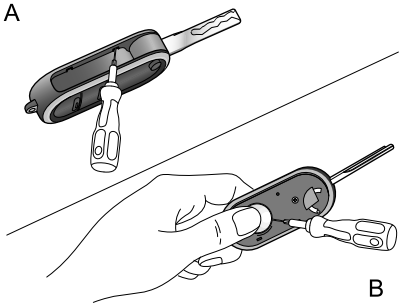

1 Unfold the remote key.

2 Use a small flat screwdriver to prise out the cap from the two holes in the key groove (A) .

3 Remove waterproof gasket.

4 Press the battery and slide, Insert a small flat screwdriver to the gap to remove the battery. Pay attention to the polarity of the battery (B) .

Note: Finger marks will adversely affect battery life; if possible, avoid touching the flat surfaces of the battery when replacing the new one.

5 Fit the new battery, ensuring that correct polarity is maintained. Meanwhile, align the waterproof gasket to the mounting holes, make sure that it is fitted correctly.

Note: It is recommended that you fit a CR2032 replacement battery.

6 Refit cap in remote key.

IMPORTANT
• Use of inappropriate battery may damage the key. The new replacement's rated voltage, sizes and specifications must be the same with the old one. • Inappropriate fitting of the battery may damage the key. • Disposal of the used battery must be strictly in accordance with relevant environmental protection acts.

Child-Proof Locks

NEVER leave children unsupervised in the car.

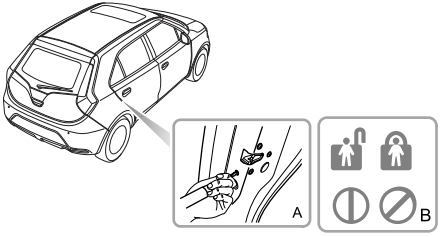

Lock or Unlock the Child-proof Locks

- Open the relevant rear door, insert a small screwdriver into the child lock slot (A).
- Turn the slot to the required position (B).

Note: Turn clockwise for left rear door, and turn anti-clockwise for right rear door to enable. Turn back to the vertical position to disable.

With the child-proof locks engaged, the rear doors cannot be opened from inside the car, but can be opened from outside the car.

Alarm System

Engine Immobilisation

Engine immobilisation is an important aspect of the security system, it is designed to safeguard the vehicle from theft, by preventing the engine from being started unless the GENUINE key is inserted into the ignition switch.

The engine will be remobilised automatically whenever a genuine key is inserted into the ignition switch.

If the key is not recognised by the engine immobilisation system, the engine will be disabled.

Locking and Unlocking

Remote Key *

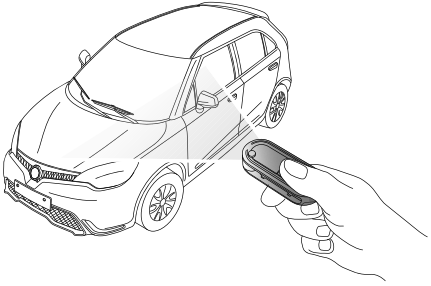

The remote key must be within range when the buttons are pressed.

The operating range may vary depending upon remote key battery condition and may sometimes be limited by physical and geographical factors.

Locking

Using the Remote Key

1 Close the doors and tailgate.

2 Press the lock button once. The direction indicator lights flash three times to confirm that the car is securely locked and the lock status alarm indicator light starts to flash.

Using the Mechanical Key

1 Insert the mechanical key into the driver's door lock and turn clockwise to lock all doors.

2 The direction indicator lights flash three times to confirm that the car is securely locked and the lock status indicator light starts to flash.

Mislock

If the driver's door is not fully closed when the remote key lock button is pressed or the mechanical key is used for locking, none of the doors will be locked, and an audible alarm will sound.

If the driver's door is closed but a passenger door or tailgate is not fully closed when the remote key lock button is pressed or the mechanical key is used for locking, all closed doors will be locked, the open door or tailgate will not be locked, the lock status indicator light will not illuminate, and an audible alarm will sound.

Once the open door or tailgate is closed, the system will enter locking status, and the lock status indicator light will illuminate.

Lock Status Indicator

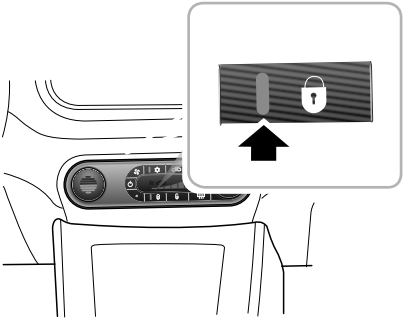

The indicator is used to indicate the lock status. When the remote key or mechanical key locks the door, the indicator will flash quickly for 10 seconds and then slow. The indicator extinguishes after the remote key or mechanical key unlocks the door. If a mislock occurs, the indicator will not illuminate. When the interior lock switch locks the door, the indicator will illuminate. If the driver's door is closed fully but any other door or tailgate is not closed when the interior lock switch locks the door, the indicator will flash.

Unlocking

Using the Remote Key

Press the unlock button once to unlock all doors. The direction indicators flash once.

Using the Mechanical Key

1 Insert the mechanical key into the driver's door lock and turn counterclockwise once to unlock all doors.

2 The direction indicators flash once.

Note: If the vehicle is unlocked but a door is not opened within 30 seconds, the vehicle will automatically relock.

Interior Lock Switch

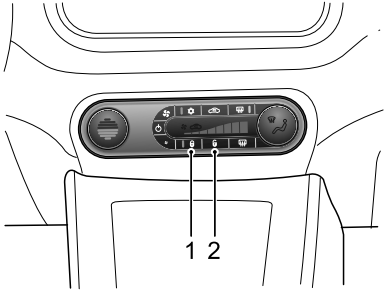

1 Interior Lock Locking Switch

2 Interior Lock Unlocking Switch

Press the interior lock locking switch to lock all doors. When doors are locked, the lock status indicator will illuminate.

If the driver's door is not closed, the interior locking switch will not function.

If any other door or tailgate is not closed when the interior locking switch is pressed, the lock status indicator will flash, indicating a mislock. The open door or tailgate will not be protected when the open door or tailgate is closed, the system will enter the protected status.

Press the interior lock unlocking switch to unlock all doors, and the lock status indicator will extinguish.

Note: If the doors are locked with the remote key, the interior lock switch will not function.

Interior Door Handles

If the doors have been locked by the interior lock switch or Speed Related Locking.

Use the door handles to open the door:

1 First operation of the door handle unlocks the door.

2 Second operation of the door handle opens the door.

Note: If the car is locked using the key or remote key the doors will be 'super-locked'. Whilst in this locked condition the door handles are rendered inoperative.

Speed Related Locking

This feature locks all the doors automatically when the road speed exceeds 3 MPH (5 km/h). Automatically all the doors are unlocked after the remote key is removed from the ignition.

Starting and Driving

Docking Station

DO NOT remove or touch the key while the car is in motion.

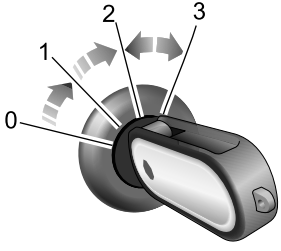

The ignition switch is located on the right side of the steering column, and uses the following sequence to initiate the ignition and start the engine.

Position 0 (LOCK)

- The key can be inserted or removed.
- To achieve the steering lock , when key removed.

Position I (ACC)

- Turn off the ignition, the key cannot be removed.
- Some electrical equipment can be operated, such as wipers, electric windows, mirrors .

Position II (ON)

- All instruments, warning lights and electrical circuits are operational.

Position III (START)

- Start the engine.
- Release the key immediately when engine starts, the ignition will return to position II automatically.

Note: When the key is in the ignition, if the driver's door is opened, an audible warning sounds to indicate that the key is not removed.

Note: Before starting the engine ensure that the gear lever is in the neutral position and the clutch pedal is pressed.

Note: If the steering wheel is locked and the key can not be turned from position 0 to position I, turn the

steering wheel left and right while turning the key to unlock the steering wheel.

Starting the Engine

NEVER start or leave the engine running in an unventilated building - exhaust gases are poisonous and contain carbon monoxide, which can cause unconsciousness and may even be fatal.

Catalytic Converter can be damaged if the wrong fuel is used, or if an engine misfire occurs. Before starting the engine, you should be aware of the precautions detailed under the section 'Catalytic Converter'.

Starting the Engine

1 Switch off all unnecessary electrical equipment (including the air conditioning) ;

2 Apply the parking brake;

3 Ensure that the gear lever is in the neutral position then press the clutch pedal to the floor;

4 Insert the key and turn the ignition clockwise to position III to start the engine. Release the key as

soon as the engine has started, the ignition will return to position II automatically.

Note: Continued use of the starter will not only discharge the battery, but may damage the starter motor, starter ring gear or catalytic converter.

Do not press the accelerator pedal when starting , do not operate the starter for more than 15 seconds at a time. If the engine does not start, turn off the ignition switch and wait at least 10 seconds before repeating the start procedure.

If the key is not recognised by the engine immobilisation system when the key is inserted into the ignition, the engine will be disabled . A warning icon will be illuminated (see warning lights and indicators in Instruments and Controls chapter).

IMPORTANT
• Do not leave the ignition switch in position I or position II when the engine is not running, otherwise it may leads to battery discharge . • Engine immobilisation is available for the vehicle. • When the engine is running, do not turn the ignition switch to position III, this operation may damage the starter motor.

Cold Climates

In temperatures of -10°C and below, engine cranking times will increase. It is essential that all unnecessary electrical equipment is switched off while cranking.

Stopping the Engine

1 After bringing the car to a stop, ALWAYS apply the parking brake;

2 Apply the parking brake;

3 Ensure that the gear lever is in the neutral position;

4 Turn the key to Position 0 , remove the key from the switch.

Note: After strenuous towing or driving at high speed (particularly in hot weather), it is suggested to allow the engine to idle for a few minutes before switching off, which enables the cooling system to work continuously to lower the engine temperature.

Economical and Environmental Driving

Running-in

The engine, transmission, brakes and tyres need time to 'bed-in' and adjust to the demands of everyday motoring. During the first 900 miles (1,500 km), it is essential that you drive with consideration for the running-in process and heed the following advice:

- Do not allow the engine to exceed 3000 rpm in any gear or the vehicle speed to exceed 72 MPH (120 km/h).
- Do not operate at full throttle or allow the engine to labour in any gear.
- Do not drive at a constant speed (either high speed or low speed).
- Avoid heavy braking where possible.

After 900 miles (1,500 km), engine speeds can be gradually increased.

Environment Protection

Your car has been designed with the latest technology in order to minimise the environmental impact of exhaust emissions.

Driving Style

The way in which you drive your car has a significant bearing on environmental pollution, as well as affecting the amount of fuel you use.

Avoid full throttle acceleration

Steady, rather than rapid, acceleration uses considerably less fuel, reduces exhaust pollutants and also minimises the wear to mechanical components.

Avoid driving at maximum speed

Fuel consumption, exhaust emissions and noise levels all increase significantly at high speeds.

Do not drive in a low gear for longer than necessary

Driving in lower gears uses more fuel and creates more noise. Change up to a higher gear as soon as possible, provided it does NOT cause the engine to labour.

Drive smoothly

Anticipating obstructions and slowing down well in advance, avoids the need for unnecessary acceleration and harsh braking. A smooth driving style not only reduces fuel consumption, but can reduce the emission of noxious gases.

Driving in rain

Emergency braking, accelerating and steering on slippery roads will reduce the vehicle's handling performance and grip.

When raining the windows may fog, reducing visibility (Use the Air-conditioning demist function).

Grip will be reduced, so please drive carefully.

Reduce speed when it rains.

Avoid aquaplaning (the effect of a film of water between the tyres and the road) affecting steering and braking performance.

Avoid driving through floods after heavy rain, which may lead to serious damage to the vehicle.

How to save fuel and extend the life of the vehicle

The following are some suggestions on saving fuel and extending the life of the vehicles.

- Maintain the correct tyre pressure; insufficient air pressure will accelerate tyre wear and waste fuel.
- Do not carry unnecessary weight. Heavy loads will increase the engine load resulting in higher fuel consumption.
- Avoid engine idling for extended periods.
- Maintain slow and smooth acceleration and avoid harsh acceleration; change to a higher gear as soon as possible.
- Avoid labouring the engine or over running. Choose appropriate gears according to the road conditions.
- Avoid continuous acceleration or deceleration. A stop-go driving style will consume more fuel.
- Avoid unnecessary stopping and braking, maintain steady speed and attempt to anticipate traffic lights. Keep an appropriate distance from other vehicles to avoid emergence braking and reduce brake pad wear.
- Avoid traffic congestion and jam areas as much as possible.

- Do not ride the brake pedal, this can cause premature wear, overheating and increased fuel consumption.
- Maintain an appropriate speed on the highway. Higher speeds use more fuel. Appropriate speed can save fuel.
- Maintain the correct wheel alignment. Avoid collision with the kerb and reduce speed on un-made roads. Out of specification wheel alignment not only will lead to excessive tyre wear, but also increases the engine load and fuel consumption.
- Avoid driving on mud or beaches. This will prevent corrosion of the vehicle underside.
- Maintain the vehicle in accordance with MG recommendations. Dirty air filters, oil etc., will reduce the engine's performance and raise fuel consumption. To extend the life of all components and reduce operating costs, regular MG Approved maintenance is needed.
- Do not stop the engine straight after high speed or long ascents or towing a trailer. Allow the engine to idle for 20 to 100 seconds depending upon driving loads and conditions. Avoid hard acceleration on a cold engine.

Maintenance

Have the vehicle regularly serviced

Regularly servicing will ensure optimum fuel consumption and minimise exhaust pollutants, as well as effectively extending the service life of the car.

Check tyre pressures regularly

Under-inflated tyres increase the rolling resistance of the car which, in turn, increases fuel consumption. Over or under-inflated tyres wear out more rapidly and also have a detrimental effect on the car's handling characteristics.

Do not carry unnecessary loads

The additional weight of unnecessary loads wastes fuel, especially in stop/start conditions where the car is frequently required to set off from stationary.

Catalytic Converter

Exhaust temperatures can be extremely high, DO NOT park on ground where combustible materials such as dry grass or leaves could come into contact with the exhaust system - in dry weather a fire could result.

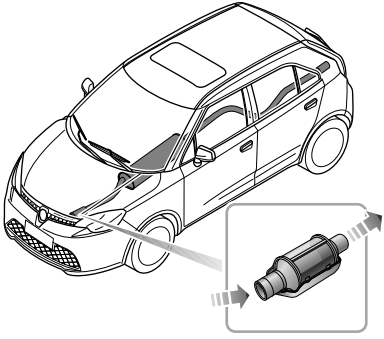

The exhaust system incorporates a catalytic converter, this converts poisonous exhaust emissions from the engine into less harmful gases.

Catalytic converters are easily damaged through improper use, especially if the wrong fuel is used.

Please observe the following precautions to minimise the chance of accidental damage.

Fuel

- Use ONLY fuel recommended for your car.
- Never allow the car to run out of fuel - this could cause a misfire which could damage the catalyst.

Starting

When driving, you should pay attention to the following points:

- Do not continue to operate the starter after a few failed attempts, seek MG Authorised Repairer.
- Do not operate the starter if an engine misfire is suspected and do not attempt to clear a misfire by pressing the accelerator pedal.

- Do not attempt to push or tow start the car.

Driving

When driving, you should pay attention to the following points:

- Do not overload or excessively 'rev' the engine.
- Do not stop the engine when the car is in motion with a gear selected.
- Seek MG Authorised Repairer if you think your car oil consumption is abnormal.
- If a misfire is suspected, or the car lacks power while driving, provided the engine has reached its normal operating temperature, it may be driven SLOWLY (at risk of catalyst damage) to an MG Authorised Repairer or suitably equipped servicing garage.
- Do not drive on terrain likely to subject the underside of the car to heavy impacts.

Note: Any engine misfire, loss of engine performance or engine run-on, could seriously damage the catalytic converter . Regular maintenance must be carried out in accordance with the schedule specified in the 'Warranty and Maintenance Manual'.

Fuel System

Fuel Requirements

Use only the recommended fuel which meets national standard! Serious damage to the catalytic converter will occur if the wrong fuel is used.

Please use the fuel which is recommended and certified by the manufacturer. See 'Major Parameters of Engine 'in 'Technical Data'.

Safety on the Forecourt

Vehicle fuel gases are highly flammable and, in confined spaces, are also extremely explosive.

Always take care when refueling:

- Switch off the engine.
- Do not smoke or use a naked flame.
- Do not use a mobile phone.
- Avoid spilling fuel.
- Do not overfill the tank.

Fuel Filler

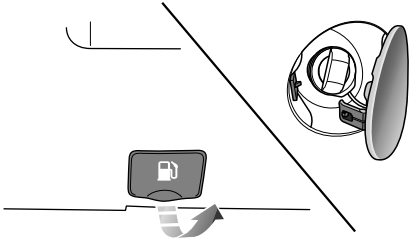

Fuel Filler Flap

The fuel filler flap is located on the rear right-hand wing. Pull the fuel filler flap release lever under the driver side instrument pack to open the flap.

Fuel Filler Cap

Unscrew the filler cap anti-clockwise and allow any pressure inside the tank to escape, before removing the cap.

After refuelling, tighten the filler cap clockwise till hearing 3 "click" sounds.

Fuel Filling

DO NOT fully fill the tank if the vehicle is to be parked in direct sunlight, or high ambient temperature - expansion of the fuel could cause spillage.

A small cover flap is incorporated into the filler neck. Inserting the correct nozzle into the filler neck will fully open the cover flap.

After refueling, if the engine runs unevenly, switch off and seek an MG Authorised Repairer before attempting to restart the engine.

Fuel Cut-off Switch

ALWAYS check for fuel leaks before resetting the fuel cut-off switch.

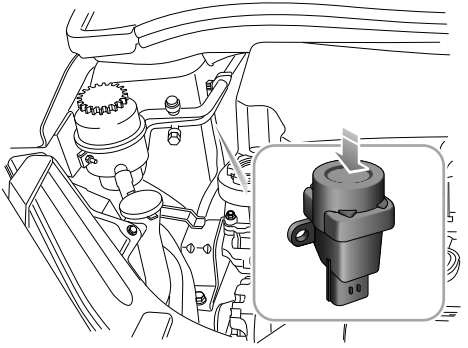

In the event of a collision or sudden impact, the fuel cut-off inertia switch automatically isolates the fuel supply to the engine, unlocks the doors, flashes the hazard lights and turns the interior lights on.

The fuel cut-off Inertia switch is located on the right hand of inner wing in the engine compartment.

The switch must be reset before the engine can be started. Reset the switch by pressing the top of the switch (arrowed in illustration).

Manual Transmission

Gear Lever

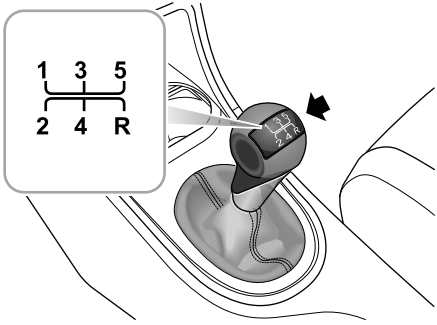

The manual transmission is a 5-speed transmission, which includes 6 gears, ie. 1, 2, 3, 4, 5 and R (reverse gear). Synchronizers are provided on all forward gears.

Precautions When Driving:

- When switching between the forward gears and reverse gear, ensure the vehicle is completely stationary, wait for a moment and then fully press the clutch pedal to complete the gear shift.
- Do not rest your hand on the gear lever while driving - pressure from your hand may cause premature wear to the gear selector mechanism.
- Do not rest your foot on the clutch pedal when driving - excessive wear to the clutch will result.
- Do not hold the car stationary on a hill by slipping the clutch. This will wear out the clutch.

Brake System

Foot Brake

For added safety, the hydraulic braking system operates through dual circuits. If one circuit should fail, the other will continue to function, but greater pedal pressure will be needed, and increased brake pedal travel, and longer stopping distances will be experienced. In the event of a brake failure where only one circuit is operational, the car should be brought to a halt as soon as traffic conditions safely allow. DO NOT continue driving - seek MG Authorised Repairer assistance.

Servo Assistance

The braking system is servo assisted, always be aware of the following:

- Never allow the car to freewheel with the engine turned off.
- Always take particular care when being towed with the engine turned off.

If the engine should stop for any reason while driving, bring the car to a halt as quickly as traffic conditions safely allow, and do not pump the brake pedal as the braking system will lose any remaining servo assistance.

Brake Pads

DO NOT rest your foot on the brake pedal while driving; this may overheat the brakes, reduce their efficiency and cause excessive wear.

For the first 900 miles (1500 km), you should avoid situations where heavy braking is required.

Remember that regular servicing is vital to ensure that all the brake components are examined for wear at the correct intervals, and changed when required to ensure long term safety and optimum performance.

Wet Conditions

Driving through water or heavy rain may adversely affect braking efficiency. The SCS (Stability Control System) includes a Brake Disc Wiping function which is activated when the windscreen wipers are used.

Electronic Brake Force Distribution (EBD)

Your car is equipped with Electronic Brake Force Distribution (EBD), which, in order to maintain braking efficiency, distributes braking forces between front and rear wheels, under all load conditions. EBD monitoring system is linked to parking brake/brake system light on the instrument pack.

If this light illuminates, there is a fault with the braking system, and EBD may not be available. If this occurs, stop the car as soon as safety permits and seek MG Authorised Repairer assistance immediately. DO NOT drive the car with parking brake/brake system light illuminated.

Electronic Brake Assist (EBA)

Your car is equipped with Electronic Brake Assist (EBA), which, reacts to the speed at which the brake pedal is applied. If, in an emergency situation the brakes are applied faster than the limits set within the system, then full ABS application is applied to bring the car to a stop in the shortest possible distance.

Hill Hold Control

Hill Hold Control is a comfort function. It works on inclines when the car detects it has come to a 'stand still status'. Once the clutch pedal has been pressed down and the brake pedal released, the vehicle will maintain pressure in the braking system for 1 – 2 seconds. After this, the Hill Hold will release.

Anti-lock Brakes (ABS)

ABS cannot overcome the physical limitations of stopping the car in too short a distance, cornering at too high a speed, or the danger of aquaplaning, i.e. where a layer of water prevents adequate contact between the tyres and the road surface.

The fact that a car is fitted with ABS must never tempt the driver into taking risks that could affect his/her safety or that of other road users. In all cases, it remains the driver's responsibility to drive within normal safety margins, having due consideration for prevailing weather and traffic conditions.

The purpose of the anti-lock braking system (ABS) is to prevent the wheels from locking while braking, thereby enabling the driver to retain steering control of the car.

Under normal braking conditions, ABS will not be activated. However, should the braking force exceed the available adhesion between the tyres and the road surface causing the wheels to lock, then ABS will automatically come into operation. This will be recognizable by a rapid pulsation felt through the brake pedal.

Braking in an Emergency

DO NOT pump the brake pedal at any time; this will interrupt operation of the ABS and may increase braking distance.

If an emergency situation occurs, the driver should apply full braking effort even when the road surface is slippery. ABS will ensure that the wheels do not lock and that the car is brought to a halt in the shortest possible distance for the prevailing road surface conditions.

Note: On soft surfaces such as powdery snow, sand or gravel, the braking distance required by the anti-lock braking system may be greater than for non-ABS braking, even though improved steering would be experienced. This is because the natural action of locked wheels on soft surfaces is to build up a wedge of surface material in front which assists the car to stop.

No matter how hard you brake, you should be able to continue steering the vehicle as normal.

ABS Warning Light

See the warning light 'ABS ' in 'Instruments and Controls'.

Note: The normal (non-ABS) braking system remains fully operational and is not affected by partial or full loss of the ABS. However, braking distances may increase.

Parking Brake

DO NOT drive with the parking brake applied, or apply the parking brake while the car is in motion. This could result in loss of control, prevent the ABS from functioning correctly, and may even cause damage to the rear brakes.

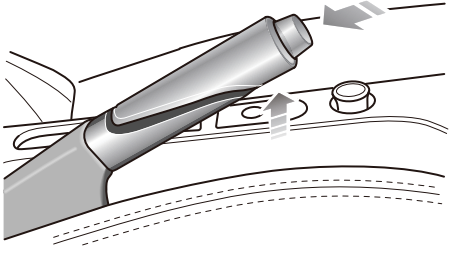

The parking brake operates on the rear wheels only. To apply the parking brake, pull the lever up. Always apply the parking brake fully whenever you park the car.

To release, pull the lever up slightly, press the button (arrowed in illustration) and fully lower the lever.

When parking on a steep slope, do not rely on the parking brake alone to hold the car.

Stability Control System (SCS) and Traction Control (TC)

Stability Control System (SCS)

SCS is designed to assist the driver in control of driving direction.

When SCS detects that the vehicle is not moving in the intended direction, it will intervene by applying brake force to selected wheels or through the engine management system to prevent sliding and assist in bringing the car back to the right direction.

Traction Control (TC)

The purpose of electronic traction control is to aid traction, thereby helping the driver to maintain control of the car in situations where one or both of the driving wheels are spinning (for example, if one wheel is on ice and the other on tarmac).

The traction control system monitors the driving speed of each wheel individually. If spin is detected on one wheel, the system automatically brakes that wheel, transferring torque to the opposite, non-spinning wheel. If both wheels are spinning, the system will reduce engine speed in order to regulate wheel rotation until traction is regained.

Note: The individual wheel braking feature of the traction control system will not operate at road speeds above 62 MPH (100 km/h). The engine torque reduction feature continues to function up to the car's maximum speed.

Switching On and Off

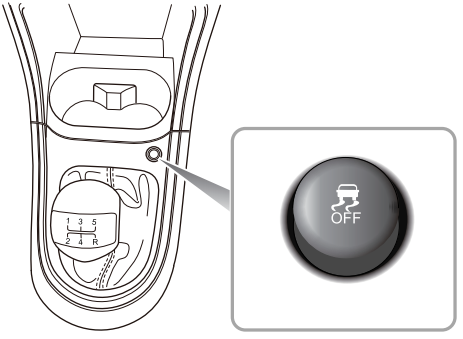

- Briefly press the SCS switch (less than 2 seconds). TC is disabled, 'Traction Control Off 'warning light will illuminate.
- Press the SCS switch (more than 2 seconds). TC and SCS are both disabled. 'Traction Control Off 'warning light and 'Stability Control System Off' warning light will illuminate.

Note: Pressing the TC/SCS disable switch for more than 10 seconds will be considered as a mis-operation. Both systems will remain disabled until the switch is pressed for a second time or the key is removed.

- Briefly press the SCS switch (less than 2 seconds) again, SCS and TC will resume and the warning light will extinguish.

Note: Disabling SCS and TC will not affect the operation of ABS. Always disable TC when driving with snow chains fitted.

SCS/TC Warning Light

For information on warning light operation, refer to 'Warning Lights and Indicators' in 'Instruments and Controls'.

Stop/Start Intelligent Fuel Saving System

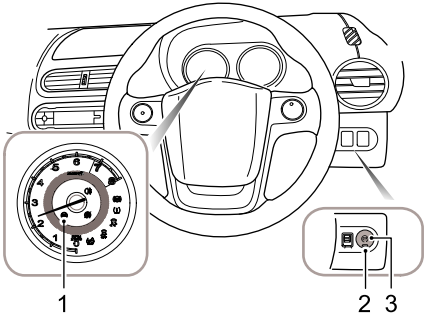

1 Instrument indicator

2 Switch indicator

3 Main switch

Engine Stop/Start has been incorporated into vehicles in an effort to reduce emissions. As the name suggests the system will allow the engine to be switched off when engine power is not required and then automatically be restarted when it is. This system defaults "on" at ignition on, the warning light in the switch (2) will illuminate, stop start can be turned off by pressing the main switch (3). When stop start is switched off the indicator in the switch is off.

Note: If driving through deep, or flood water, disable the stop start system by pressing the switch (3).

Automatic Shutdown of Engine

Although the engine will not be running when the vehicle stops and the stop start function cuts in, certain actions could render the vehicle dangerous:

1. ***Driver exiting the vehicle whilst the seat belt is fastened***
2. ***Driver exiting the vehicle when the gear position is R/D/S/W/Tiptronic (auto models only)***
3. ***Leaving the ignition switched on when re-fuelling - ALWAYS remove the key.***

Stop/Start Intelligent Fuel Saving will be initiated when the vehicle comes to a halt (if not switched off) when the following conditions are met, at this time the indicator lamp in the IPK will illuminate:

- Manual transmission - neutral selected and clutch pedal released.
- Vehicle is stationary.
- Vehicle speed prior to parking was in excess of 6 mph (10km/h).
- Driver's door and bonnet are closed.
- Driver's seat belt is fastened.

Stop Start Intelligent Fuel Saving will be disabled under the following conditions:

- Engine temperature too low.
- Defrost selected in the AC system.
- Blower speed 3 or 4 selected on non A/C cars. Blower speed above 4 selected on A/C cars.
- Low battery power or battery not within the desired range.
- Insufficient brake vacuum.
- Starter motor operated more than 3 times a minute.
- Reverse gear selected or has been selected prior to stopping if the vehicle has not exceeded 6 mph (10km/h).
- High altitude areas.

Automatic Engine Start

The vehicle will automatically restart if the driver carries out the following, at this time the indicator light in the IPK will extinguish:

- Manual transmission - neutral selected, clutch or accelerator pedal pressed.

Note: In some individual case the MIL may illuminate during automatic restart. This is caused by battery voltage reduction, not a fault. if the M IL stays on, seek advice from an MG Authorised Repairer.

Under certain conditions the vehicle may automatically restart without direct driver input (as long as the stop start operation criteria is met):

- Defrost of windscreen is selected.
- Manual heater blower speed selection is moved above speed 3, ETC AC blower speed selection is moved above speed 5.
- Battery voltage drops below a pre determined limit. Vehicle moves/rolls - vehicle speed signal.
- Vehicle moves/rolls - vehicle speed signal.
- Brake vacuum drops below a pre determined limit.
- Stop/Start master switch is pressed.

Note: When under automatic stop start control, vehicles fitted with manual transmissions will require neutral to be selected to restart the engine.

If any of the following conditions occur after automatic stop start is initialised, the indicator lamp in the IPK extinguishes and the vehicle will require restarting with the key.

- Driver's seat belt unfastened.
- Driver's door is opened.
- Bonnet is opened.

If the vehicle is stalled when under automatic stop start control and none of the above are present, the vehicle can be restarted by selecting neutral and pressing the clutch pedal.

Note: If the battery voltage is low, automatic restarting after stalling may be inhibited.

Battery

When charging the battery, starting the car with an external power source or supplying power from the vehicle, the negative cable must be connected to a suitable position on the vehicle body. Failure to do this will result in inaccurate battery power calculation which will effect automatic Stop/Start control.

DO NOT disconnect the battery sensor unless absolutely necessary. removal will result in inaccurate battery power calculation which will effect automatic Stop/Start control.

Note: Failure to operate within the following guidelines will effect battery performance and automatic Stop/Start control:

1. ***After power interruptions (battery disconnection) the automatic Stop/Start function will be suspended until the vehicle is left in a locked state for at least 4 hours whilst the system relearns the state of the battery.***
2. ***If the vehicle is run continually for more than 100 hours uninterrupted, the Stop/Start function will be suspended until the vehicle is left in a locked state for at least 4 hours whilst the system relearns the state of the battery.***
3. ***If the battery requires replacement, ALWAYS use a genuine part to the manufacturers specification. Failure to adhere to this can affect the automatic Stop/Start system.***

Stop/Start Intelligent Fuel Saving System Failure

In the event of a Stop/Start Intelligent Fuel Saving System failure, contact an MG Authorised Repairer.

The Stop/Start Intelligent Fuel Saving System can be effected by faults within other vehicle systems - in the event of failure contact an Authorised MG Repairer.

Serious Battery Capacity Loss, Starter Inoperative

In the case of serious battery power loss, automatic Stop/Start and key start may not be possible. In this case refer to the Emergency Information chapter, Emergency Starting section for further details.

Cruise Control System *

Cruise Control System

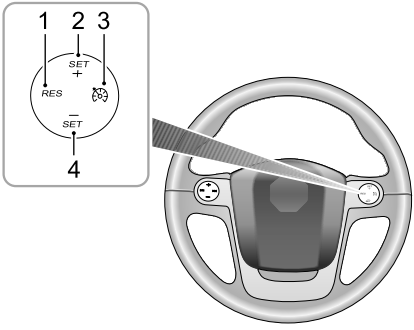

1 Reset switch

2 Increase set switch

3 Main switch

4 Decrease set switch

Cruise control enables the driver to maintain a constant road speed without using the accelerator pedal. This is particularly useful for motorway cruising, or for any journey where a constant speed can be maintained for a lengthy period.

The following precautions must be observed when using cruise control:

- DO NOT attempt to use cruise control when using reverse gear.
- DO NOT use cruise control on winding or slippery road surfaces, in the rain, or in traffic conditions where a constant speed cannot easily be maintained.
- ALWAYS switch off the master switch when you no longer intend to use cruise control.

Cruise Control System Operation

The cruise control system consists of four switches: the main switch, reset switch and two speed increase/decrease set switches. All switches are mounted at the right side of the steering wheel.

1 When the current vehicle speed is above 25mph (40KM/h), press down the master switch (3 in the

figure), the indicator lamp in the instrument pack illuminates and the cruise system is activated.

2 Press the speed set switch SET +/SET -(2 and 4 shown in the figure), set the memory speed of the cruise system, and the cruise system will take effect. At this time, the cruise control system will maintain the set speed without depressing the accelerator pedal.Cruise control will only operate between vehicle speeds of 25 - 125 mph (40 - 200 km/h).

Note: The set speed held in the cruise control memory will be cancelled when either the cruise control master switch is pressed or the ignition key removed.

Cruise control will be disengaged when the brake pedal is pressed or a different gear is selected. To return to your previous set speed, press the RES switch (figure 1) .

Note: The cruise control system can only work when the gearlever is in 3rd gear or above.

Change the Set Speed

Shortly press (less than 0.5 seconds) the SET +/SET - switch to increase/decrease the vehicle set speed in increments of 1mph/1km/h, then the vehicle will accelerate/decelerate to the new set speed. Press and hold the SET +/SET - switch, the vehicle will keep accelerating/decelerating until the switch is released. The selected speed is set accordingly.

The vehicle can also be driven using the accelerator pedal with the cruise control activated. Once the accelerator pedal is released, the system will return to the set speed.

When accelerating, press the SET + switch, the system will apply the higher vehicle speed as the new set speed.

Parking Aid - PDC (Parking Distance Control) *

Parking Aid (Ultrasonic Parking Ranging Warning Devices)

The purpose of the parking aid is to assist the driver during reversing! The sensors may not be able to detect certain types of obstruction, e.g. narrow posts or small objects no more than a few inches wide, small objects close to the ground, objects above the level of the boot and some objects with nonreflective surfaces.

Keep the sensors free from dirt, ice and snow. If deposits build up on the surface of the sensors, their performance may be impaired. When washing the car, avoid aiming high pressure water jets directly at the sensors.

It is important to remember that the system is no more than an AID to parking. It is not foolproof in operation, nor is it a substitute for observation or personal judgement.

Three ultrasonic sensors, situated in the rear bumper, scan an area behind the car searching for obstructions. If an obstruction is detected, the system calculates its distance from the rear of the car and communicates this information to the driver by sound warning chimes.

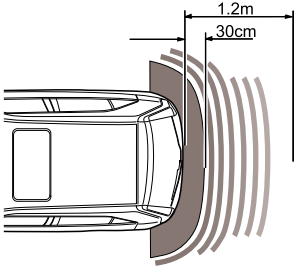

Parking aid operation:

The PDC system is enabled automatically when the ignition is in position 2 and reverse gear is selected. It is switched off as soon as the gear selection lever is moved from reverse. A short beep is given by the sounder in the instrument pack within 1 second after selecting reverse gear to indicate that the system is operating normally.

While reversing, the instrument pack sounder gives an audible warning for the distance between the vehicle and an object:

- If an obstruction is located within 1.2 m range of the rear parking aid sensors, the warning commences. As the car moves closer to the obstruction, the beeps are transmitted more rapidly.
- Once the obstruction is within 30 cm range of the rear bumper, warning chimes will merge into a continuous warning. If the obstruction exists in the 'blind area' no warning chimes will be heard.

Note: if a longer, higher pitched sound is emitted for 3 seconds when reverse gear is selected this indicates a fault in the system. In this case seek assistance from your MG Authorised Repairer.

Tyre Pressure Monitoring System (TPMS)

The TPMS is not a substitute for checking tyre condition and pressures.

Note: The TPMS warns when the tyre pressure is low; it does not re-inflate the tyre.

System Operation

The system is controlled by the ABS system, which constantly monitors the speed of each wheel. If, during normal driving conditions with the brakes not applied, the ABS detects that one wheel is rotating quicker than the others, it deduces that the pressure of that tyre has fallen below the predefined limit of the system. As a result, the warning light on the instrument pack will illuminate.

Check your tyres at the earliest opportunity and inflate to the correct pressure. Refer to 'Tyre Pressures (Cold)' in 'Technical Data'.

System Malfunction

This system is self-monitoring, the TPMS warning light on the instrument panel will flash if a fault is detected.

The following conditions will not manifest themselves as a fault:

- An identical pressure change in 2 or more tyres simultanously.
- A tyre blow out.

The following conditions may manifest themselves as a fault:

- Driving on snow or a slippery surface.
- Excessive slip rates on front tyres or excessive lateral acceleration.
- Tyre chains are fitted.
- Non-specified tyres have been fitted.
- A TPMS reset has not been preformed after tyre replacement.

Initialising TPMS

If the car is fitted with a replacement tyre/tyres, or a spare tyre or simply reinflating a tyre due to low pressure, it will be necessary to initialise the TPMS system.

Stop the vehicle , ensure handbrake is applied, switch on the ignition , repeatedly press (less than 2 seconds) the button located on the end of the indicator stalk to get to 'TPMS RESET?'. Press and hold 'TPMS RESET?'. This will initialize the system. If successful, 'TPMS RESET√' will appear. If unsuccessful, 'TPMS RESET×' will appear, consult your MG Authorised Repairer.

Note: Before carrying out a TPMS reset inspect the tyres for signs of damage and ensure the tyres are inflated to the recommended pressures.

Note: A TPMS reset will be completed after the vehicle has travelled total of 1 hour or more at a road speed greater than 6 mph (10 km/h).

Load Carrying

DO NOT exceed the gross vehicle weight or the permitted front and rear axle loads. Failure may result in vehicle damage or serious injury.

Load Space

Ensure that the rear seat backrests are securely latched in the upright position when loads are carried in the load space behind the seats.

If the tailgate can not be closed due to the type of cargo loaded, be sure to close all windows during driving, select the face distribution mode of the air condition, and set the blower to maximum speed, so as to decrease exhaust fumes entering the vehicle.

When luggage is carried in the load space, always ensure heavy items are placed as low and as far forward as possible, so as to avoid the cargo shift in the event of an accident or sudden stop.

Drive carefully and avoid emergency braking or maneuvers.

Driving with the tailgate open is very dangerous. If the load being carried requires the tailgate to be open, please ensure the cargo is suitably secured and every measure is taken to prevent exhaust fumes entering the vehicle.

IMPORTANT
Traffic regulations must be observed when loading cargo, if the cargo extrudes the loadspace appropriate warning measures must be taken to warn other road users.

Internal Loading

DO NOT carry unsecured equipment, tools or luggage that could move, causing personal injury in the event of an accident , or emergency brakes or hard acceleration.

Folding the rear seats can increase luggage space, refer to 'Rear Seat' described in the 'Seats and Restraints' chapter.

When cargo is loaded in the vehicle, place it at a position as low as possible and ensure that it is tightly secured, so as to avoid personal injury caused by cargo movement.

Emergency Information

154 Hazard Warning Devices

155 Emergency Starting

157 Vehicle Recovery

160 Tyre Repair & Wheel Replacement

168 Fuse Replacement

174 Bulb Replacement

Hazard Warning Devices

Hazard Warning Lights

The Hazard Warning switch is either located in the centre console or heater control panel, dependant upon trim level, for information about the Hazard Warning Lights refers to the "Lights and Switches " of the "Instruments and Controls" chapter.

Note: Before you stop or slow the car in an emergency, always press the hazard warning switch. All the direction indicators will flash together warn other road users when your car is causing an obstruction or is in a hazardous situation.

Warning Triangle

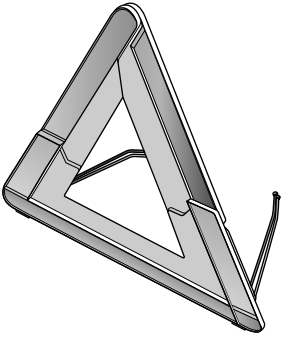

The warning triangle supplied with your car is stowed in the loadspace.

If you have to stop your car on the road in an emergency, you must place a warning triangle about between 50 and 100 metres behind the car to warn other road users of your position.

Emergency Starting

Using Booster Cables

NEVER start the engine by pushing or towing.

Make sure that BOTH batteries are of the same voltage (12 volts), and that the booster cables are approved for use with 12 volt car batteries.

Ensure sparks and naked lights are kept well away from the engine compartment.

Using booster cables (jump leads) from a donor battery, or a battery fitted to a donor vehicle, is the only approved method of starting a car with a flat battery.

If the battery from a donor vehicle is to be used, the vehicles should be parked with their battery locations adjacent to one another. Ensure that the two vehicles do not touch.

Starting the Vehicle

Ensure that each booster cable connection is securely made. There must be no risk of the clips accidentally slipping from the battery terminals (as a result of engine vibration, for example), this could cause sparking, which could lead to fire or explosion.

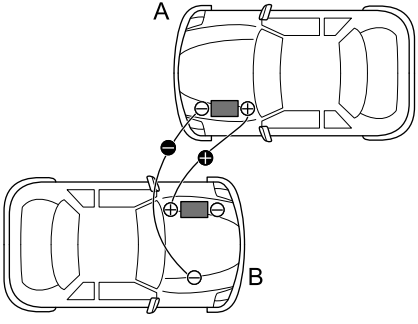

Remove the ignition key and switch off ALL electrical equipment of BOTH vehicles, then follow the instructions below:

1 Connect the RED booster cable between the positive (+) terminals of both batteries. Connect the BLACK booster cable from the negative (-) terminal of the donor battery (A) to a good earth point (an engine mounting or other unpainted surface, for example), at least 0.5 m from the battery and well away from fuel and brake lines on the disabled vehicle (B) .

IMPORTANT
DO NOT connect a booster cable to the negative (-) terminal of the discharged battery! This may result in damage the electrical components.

2 Check that the cables are clear of moving parts of both engines, then start the engine of the donor vehicle and allow it to idle for a few minutes.

3 Now start the engine of the vehicle with the discharged battery (DO NOT crank the engine for more than **10** seconds).

4 Once both engines are running normally, allow them to idle for two minutes before switching off the engine of the donor vehicle and disconnecting the booster cables. DO NOT switch on any electrical circuits on the previously disabled vehicle until AFTER the booster cables have been removed.

5 Disconnecting the booster cables must be an exact reversal of the procedure used to connect them, i.e.disconnect the BLACK cable from the earth point on the disabled vehicle FIRST.

IMPORTANT
NEVER turn on any electrical equipment on the started vehicle before removing the booster cables.

Vehicle Recovery

Towing Eye

DO NOT use a tow rope that is twisted - any unwinding force could unscrew the front towing eye.

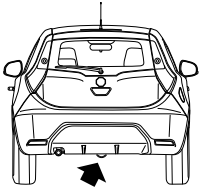

Your car is equipped with a removable towing eye at the front, and with a fixed towing eye at the rear. The towing eye is stored in the tool kit beneath the luggage area floor when not in use.

To fit the towing eye, remove the small cover set into the bumper, then screw the towing eye into the threaded hole in the bumper beam (see illustration). Ensure the towing eye is fully tightened!

Note: The towing eye cover may be secured to the bumper by a plastic cord.

Both towing points are intended for use by qualified recovery specialists to assist in the recovery of your car should a breakdown or accident occur. They are not designed for towing other vehicles.

Towing for Recovery

If your car needs to be towed, most qualified recovery specialists will use wheel lift equipment to suspend the front wheels, while the rear wheels remain on the ground. However, if it is necessary for the car to be towed with all four wheels on the ground, abide by the following procedure:

Before Being Towed:

DO NOT remove the ignition key while the car is being towed on four wheels – as this will prevent the steering wheel from being turned.

1 Switch the ignition on to position 2 to enable the brake lights, wipers and direction indicators to be operated if necessary. If, due to an electrical fault, it is considered unsafe to switch the ignition on, the car will need to be recovered on a trailer.

2 Place the gear lever in neutral.

3 Release the hand brake.

While Being Towed:

The towing distance should not exceed 30 miles (48 km). While towing for recovery, the towing vehicle should never exceed 30 mph (48 km/h)

Without the engine running, greater effort will be required to operate the brake pedal and turn the steering wheel. Longer stopping distances will also be experienced.

Transporter or Trailer with Rope

DO NOT use a tow rope to tow your car behind another vehicle.

If your car is to be transported on the back of a trailer or transporter, it must be secured as illustrated.

Position the car on the trailer, apply the hand brake and place the gear lever in **Neutral**. Fit wheel chocks (1) as shown, then position the anti slip rubber blocks (2) around the circumference of the tyre.

Fit the lashing straps (3) around the wheels and secure to the trailer. Tighten the straps until the car is securely held.

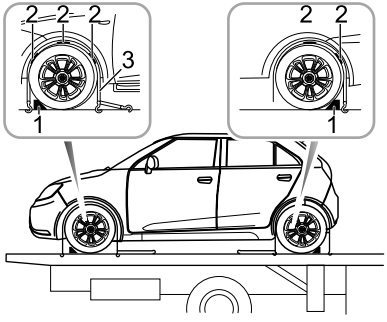

Tyre Repair & Wheel Replacement

Tool Identification *

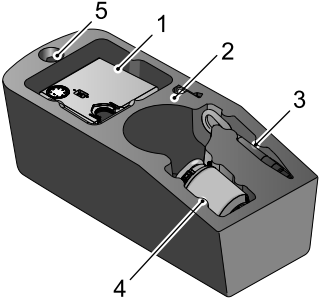

1 Electric air compressor
2 Wheel nut cover removal tool
3 Towing hook
4 Tyre repair sealant
5 Locking wheel bolt adapter

Tyre Repair *

1 Remove the sticker on the Tyre Sealant Bottle and attach it to the steering wheel to remind the driver not to exceed 50 MPH (80 km/h). (Figure 1)

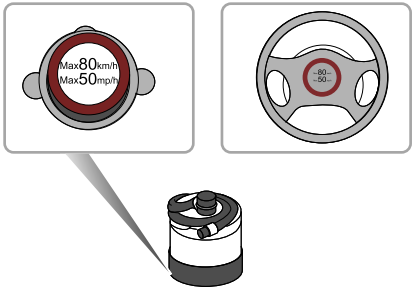

2 Connect the air hose of the electric compressor to the tyre sealant bottle , fit the Tyre Sealant bottle (Upright) into the slot on the compressor. Remove the valve dust cap from the flat tyre and connect the filler hose from the tyre sealant bottle to the tyre valve. Ensure that the power switch of the Electric air compressor is switched off (i.e., press "O"), then insert the plug from the compressor into the centre console power socket.

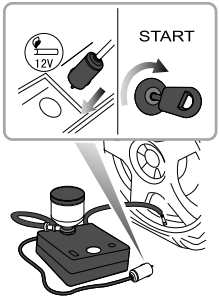

Note: To avoid battery discharge, it is recommended to keep the engine running.

3 Switch on the power switch of the electric compressor (i.e., press "-"), to start pumping sealant into the tyre. The tyre sealant bottle will become empty after

approximate 30 seconds. The tyre should reach the specified inflation pressure of 2.2 bar (34 psi) within 5 or 10 minutes.

Note: The pressure gauge may briefly reach 6 bar (87 psi), then the pressure begins to drop to normal.

4 When the required pressure is reached, switch off the power switch of the electric compressor (i.e., press "O").

Note: If the required pressure cannot be reached within 10 minutes, please disconnect the compressor, drive the vehicle 10 metres (33 feet) approx forward or backward to allow the sealant to spread within the tyre. If the required pressure can still not be reached, the tyre is severely damaged and you should seek assistance from the MG Authorised Repairer.

Note: Consecutive operation of Electric air compressor for more than 10 minutes may result in damage to the compressor.

Note: Under no circumstances should you continue your journey with a deflated tyre. Driving a vehicle with a deflated tyre is extremely dangerous.

5 Remove the tyre sealant bottle from the slot in the compressor, disconnect the hose from the tyre valve, remove the compressor plug from the centre console power socket, return the tyre repair kit to its stowage tray.

6 After successfully adding sealant to the tyre, drive immediately for a short time (around one minute) this will allow the sealant to distribute evenly inside the tyre. Continue driving and do not exceed 50 MPH (80 km/h).After a further 10 minutes, find a safe place to stop and recheck the tyre pressure.

- If the tyre pressure has dropped to less than 0.8 bar (11.6 psi), do not continue driving, seek assistance instead.
- If the pressure is greater than 0.8 bar (11.6 psi) after a 10 minutes drive, correct the tyre pressure (see tyre pressure label) and continue. Check again after another 10 minute drive. If 1.8 bar (26.1 psi) cannot

be reached, do not continue drive, seek assistance instead. Do not exceed 50MPH (80km/h).

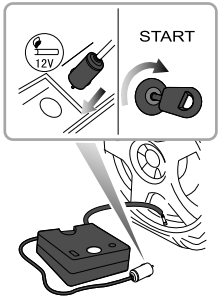

- If the pressure has not dropped after the second 10 minutes drive, continue. If 1.8 bar (26.1 psi) cannot be reached, do not continue drive, seek assistance instead. Do not exceed 50MPH (80km/h).

Note: DO NOT remove foreign objects (eg. screws,nails) from the tyre. The tyre repair system must only be used when the foreign object is in the tread pattern (A), DO NOT attempt a repair when the damage is in the sidewall of the tyre (B).

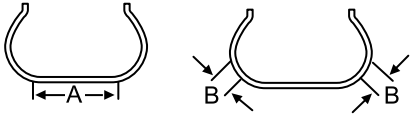

At the earliest opportunity get the tyre replaced by an Authorised MG Repairer or tyre specialist and replace the used tyre sealant bottle with an MG approved sealant.

Accessing the Spare Wheel and Tools *

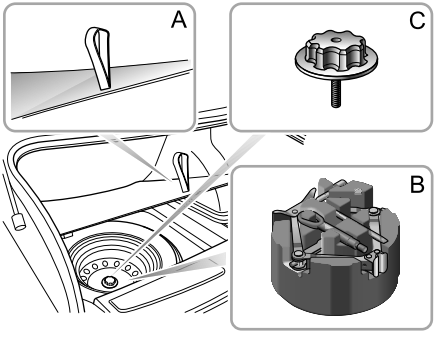

To access the spare wheel and tools:

1 Use the lifting strap to raise the luggage carpet. (A)

2 Remove the tool tray. (B)

3 Unscrew the spare wheel clamp and lift the wheel from the boot. (C)

Tool Identification *

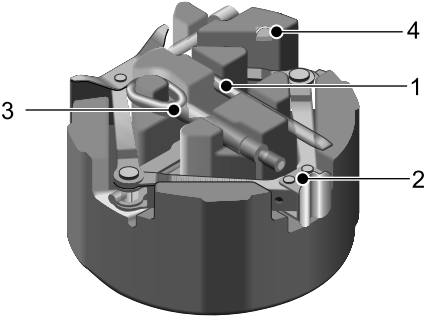

1 Wheel nut wrench.

2 Jack

3 Front towing eye.

4 Trim removal tool

Changing a Wheel

If possible, choose a safe place to stop away from the main thoroughfare. Always ask your passengers to get out of the car and wait in a safe area away from other traffic.

Switch on hazard lights. If available, position a warning triangle or a flashing amber light 50 to 150 metres (150 to 500 ft) behind your vehicle to warn approaching traffic.

Before changing a wheel, ensure the front wheels are in the straight ahead position, apply the parking brake and select first gear.

Observe the following precautions:

- Ensure the jack is positioned on firm, level ground; NEVER on soft ground, or over metal gratings or manhole covers. DO NOT place additional material between the jack and the ground, this may jeopardise the safety of the jacking operation.
- If jacking on a slope is essential, place chocks at the front and rear of the wheel diagonally opposite the one to be removed.
- NEVER jack the car with passengers inside or with a caravan or trailer connected!

Positioning the Jack

NEVER work beneath the car with the jack as the only means of support. The jack is designed for wheel changing only!

NEVER jack the car using any jacking points other than the designated points shown. Serious damage to the car could result.

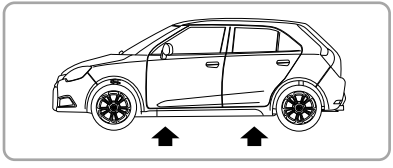

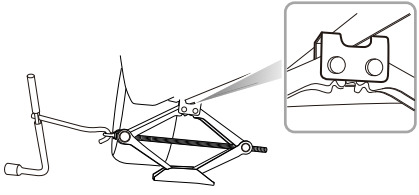

Avoid accidental contact with any underbody parts, especially hot exhaust system components.

Position the jack on firm level ground under the jacking point nearest the wheel to be removed. Note that the jack head must fit into the corresponding recess in the sill plate (see inset in illustration).

Turning the jack screw by hand, adjust the jack until the jack head fits snugly onto the sill in the correct area. Ensure that the base of the jack is in full contact with the level ground.

Changing the Wheel

Check spare tyre pressure regularly. Always check tyre pressures after changing a wheel.

Ensure that wheel nuts are tightened to correct torque of 105 - 115 Nm.

1 Before raising the car, use the wheel wrench to slacken each of the wheel nuts half a turn anti-clockwise.

Note: Depending on the style of wheels fitted it may be necessary to remove wheel nut covers, centre cap or wheel trim. Use the special tool located within the tool kit to remove the relevant trim type.

Note: The locking wheel nuts on vehicles fitted with them (one locking wheel nut per wheel) can only be loosened or tightened by using the adapter provided.*

2 Turn the jack screw clockwise to raise the car until the tyre is clear of the ground.

3 Remove the wheel nuts and place them in the tool tray to prevent them from being lost.

4 Remove the road wheel.

Note: Avoid placing wheels face down on the ground - the surface may be scratched.

5 Fit the spare wheel and tighten the wheel nuts until the wheel is seated firmly against the hub.

6 Lower the car and remove the jack, then FULLY tighten the wheel nuts in a diagonal sequence.

7 Finally, return the tools to the tool tray and the wheel (face down) to the well in the loadspace floor

Note: Recheck the wheel nut torque after initial tightening.

Note: Consult your MG Authorised Repairer or tyre specialist for a replacement tyre, as soon as possible.

Fuse Replacement

Fuse

Fuses are simple circuit breakers which protect the vehicle electrical equipment by preventing the electrical circuits from being overloaded. A blown fuse indicates that the item of electrical equipment it protects stops working.

The location and capacity of each fuse are labeled on the fuse box lids.

Check a suspect fuse by removing it from the fuse box and looking for a break in the wire inside the fuse.

We suggest that take some spare fuses for replacement. Spare fuses are available from MG Authorised Repairers.

Healthy and Blown Fuses

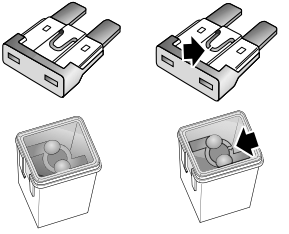

IMPORTANT
• NEVER attempt to repair a blown fuse. ALWAYS replace a fuse with one of the same rating. • If a replaced fuse fails immediately, please contact an MG Authorised Repairer as soon as possible.

Fuse Box

There are two fuse boxes in the vehicle:

- Passenger Compartment Fuse Box (below the glove box at the front passenger side) .
- Engine Compartment Fuse Box (at the left side of the Engine Compartment) .

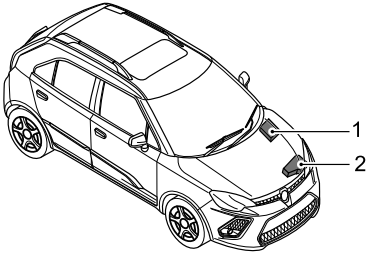

1 Passenger Compartment Fuse Box

2 Engine Compartment Fuse Box

Passenger Compartment Fuse Box

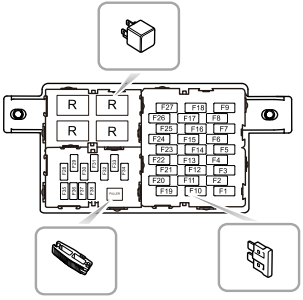

Check or Replace a Fuse

1 Switch off the ignition switch and all electrical equipment, disconnect the battery negative cable.

2 Remove the closing panel below the glove box to gain access to the fuse box.

3 Press the fuse extraction tool onto the fuse head and pull to remove the fuse. A blown fuse can be recognised by a break in the wire.

4 Replace the blown fuse with a same rating.

Fuse Specification

Fuse	Rating	Function
F1	20A	Rear Wiper Relay, Rear Washer Relay (LHD)
F2	15A	Centre Console Power Socket
F3	5A	Diagnostic Socket
F4	5A	ABS, IPK, DC/DC, ECM, BCM, SAS, Yaw Rate Sensor
F5	10A	Rear Washer Relay (RHD)
F6	5A	Air Condition, Blower Relay, Centre Console Power Socket Relay, Heated Rear Window Relay, Headlamp Levelling Switch , Passenger Side Airbag Disabled Indicator
F7	15A	Super Lock Relay
F8	10A	SRS DCU
F9	10A	Inertia Switch
F10	5A	Left Position Lamp, Switch Illumination, Left Tail Lamp
F11	5A	Front Interior/Map Lamp
F12	5A	Rear License Plate Lamp, Right Tail Lamp, Switch Illumination, Right Position Lamp
F13	20A	Brake Pedal Switch, Reverse Lamp Switch
F14	15A	CDL Motor (Lock), Tailgate Motor (Lock)
F15	10A	Reserve Fuse
F16	15A	CDL Motor (Unlock), Tailgate Motor (Unlock)
F17	10A	Horn
F18	10A	BCM, Rear Washer Relay, Driver Door Combination Switch, IPK , In Car Entertainment
F19	5A	Left Brake Lamp, High Mounted Brake Lamp

Fuse	Rating	Function
F20	20A	Left Rear Window Lift Switch
F21	5A	Right Brake Lamp
F22	20A	Right Rear Window Lift Switch
F23	5A	ECM, BCM
F24	25A	Passenger Window Lift Switch
F25	20A	Rear Screen Heating
F26	25A	Driver Door Combination Switch
F27	10A	Exterior Rear View Mirror Heating
F28	15A	In Car Entertainment
F29	-	-
F30	10A	Air Condition
F31	-	-
F32	10A	IPK

Fuse	Rating	Function
F33	-	-
F34	5A	DAB
F35	5A	Reserve Fuse
F36	10A	Reserve Fuse
F37	15A	Reserve Fuse
F38	20A	Reserve Fuse

Engine Compartment Fuse Box

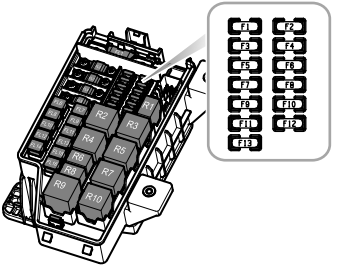

Check or Replace a Fuse

1 Switch off the ignition switch and all electrical equipment, disconnect the battery negative cable.

2 Press the buckle to remove the fuse box lid.

3 Press the fuse extraction tool onto the fuse head and pull to remove the fuse. A blown fuse can be recognised by a break in the wire.

4 Replace the fuse with a same rating.

Fuse Specification

Fuse	Rating	Function
F1	10A	Right Front Low Beam Lamp
F2	5A	Post-Oxygen Sensor, Inlet Cam Solenoid, Exhaust Cam Solenoid
F3	10A	Left Front Low Beam Lamp
F4	10A	Air Condition Compressor Clutch
F5	5A	ECM
F6	5A	Cooling Fan Relay, Purge Control Valve, Air Condition Compressor Clutch Relay, Fuel Pump Relay, Stop Start Switch
F7	30A	Front Wiper Enable Relay, Front Wiper Speed Control Relay
F8	5A	Pre-Oxygen Sensor
F9	15A	Day Time Running Lamp, IPK Illumination

Fuse	Rating	Function
F10	10A	Right Front High Beam Lamp, IPK Illumination
F11	10A	Left Front High Beam Lamp
F12	30A	Ignition Coils, Injectors, ECM
F13	30A	-
FL1	2000A	Alternator, Passenger Compartment Fuse Box Fuse F4、FL11
FL2	50A	SCS ECU (Pump)
FL3	40A	Cooling Fan
FL4	60A	Passenger Compartment Fuse Box Fuse F20、F22、F24、F26
FL5	80A	Passenger Compartment Fuse Box Fuse F1、F3、F4、F5、F7、F9、F25、F27, Rear Screen Heating Relay
FL6	25A	SCS ECU (Valve)
FL7	50A	Ignition Switch
FL8	25A	Common Unlock and Lock Relays
FL9	30A	DC/DC Converter
FL10	25A	Horn Relay, Washer Pump Relay
FL11	30A	Blower Motor, Air Conditioning
FL12	25A	Dipped Beam Relay
FL13	30A	Starter Relay
FL14	25A	BCM Indicators & Rear Fog Lamp
FL15	30A	Position Lamp Relay, Day Time Running Lamp Relay, Engine Compartment Fuse Box Fuse F9、F10、F11, Passenger Compartment Fuse Box Fuse F10、F12
FL16	-	-

Bulb Replacement

Bulb Specification

Lamp Bulb	Specifications
Headlamp High/Low Beam	H4 60/55W
Side Light	W5W 5W
Front Direction Indicators	PY21W 21W
Side Repeater (In Mirror)	WY5W 5W
Reverse Lamps	H21W 21W
Rear Fog Lamps	W21W 21W
Stop/Tail Lamps	PR21/5W 21/5W

Lamp Bulb	Specifications
License Plate Lamps	W5W 5W
Interior Lamp	C10W 10W
Rear Direction Indicators	P21W 21W
Load Space Lamp	R10W 10W
High Mounted Stop Lamp	W5W 5W
Daytime Running Lamp	LED (non-serviceable)

Bulb Replacement

Before replacing any bulb, turn off the lighting switch to avoid any possibility of a short circuit.

Note: Only replace bulbs with the same type and specification.

Take care NOT to touch the glass with your fingers; always use a cloth to handle the bulb. If necessary, clean the glass with methylated spirits to remove fingerprints.

If in doubt, when replacing bulbs, contact a specialist workshop.

The bulb removal procedure is as follows (The installation procedure is in reverse order, so it will not be described here), for other bulbs not listed and to be replaced, ask an MG Authorised Repairer for help.

Load Space Lamp

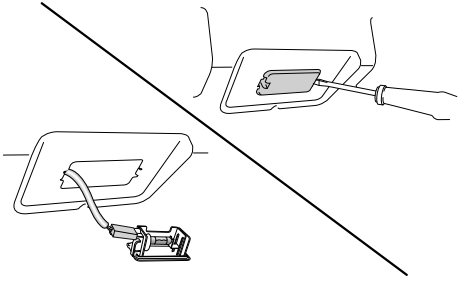

Insert a small flat-bladed screwdriver into the indent on one of the narrow sides of the lens and carefully remove the unit from its location.

Licence Plate Lights

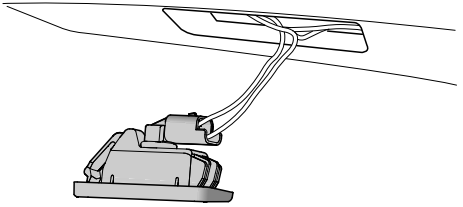

1 Insert a small flat-bladed screwdriver into the narrow gap at one side of the license plate light, pry slightly and remove the lens.

2 Remove the bulb from the bulb holder.

Interior Lamp

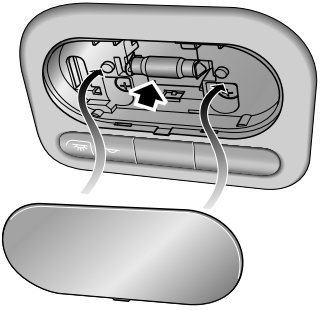

1 Use a flat-blade screwdriver to pry the front end of the lens, and remove the lens.

2 Remove the bulb from the bulb holder.

Maintenance

178 Maintenance
182 Bonnet
183 Engine Compartment
185 Engine
187 Cooling System
189 Brakes
191 Power Steering
193 Battery
197 Washers
199 Wiper
202 Tyres
207 Cleaning and Vehicle Care

Maintenance

Routine Servicing

The safety, reliability and performance of your car will depend partly on how well it is maintained.

You must ensure that maintenance is carried out when required and according to the information contained in the 'Warranty and Maintenance Manual'.

Servicing

The message centre shows the distance remaining before the next service.

The distance display commences at the maximum service interval distance for your market, and progressively reduces in increments of 25 miles (50 km) as the car is driven, until zero is reached. The relevant service should be carried as soon as the distance display shows zero. After the completion of each service, the distance display will be reset to the maximum service interval distance for your market.

Note: Because the service interval display reduces in increments of 25 miles (50 km), it is possible to undertake a short journey without triggering any movement from the display.

Note: If a service is not carried out (or the display is not reset), the distance indicator, having reached zero, will remain at zero until it is reset.

Service History

Refer to the 'Warranty and Maintenance Manual' for details. Ensure your MG Authorised Repairer signs and stamps the Service History after each service.

Brake Fluid Replacement

The brake fluid requires replacement every two years, irrespective of the distance the car has travelled. Your MG Authorised Repairer will replace the brake fluid at the service nearest to the conclusion of each two year period.

Coolant Replacement

The engine coolant (anti-freeze and water solution) needs to be replaced every four years regardless of the distance the car has travelled. Your MG Authorised Repairer will replace the coolant at the service nearest to the conclusion of each four year period.

Emission Control

Your car is fitted with emission and evaporative control equipment designed to meet specific territorial and legal requirements. Incorrect engine settings may adversely affect exhaust emissions, engine performance and fuel consumption, as well as causing high temperatures, which could result in damage to the catalytic converters, and engine.

IMPORTANT
You should be aware that unauthorised replacement, modification or tampering with this equipment by an owner or motor vehicle repairer could result in the manufacturer's warranty being deemed as invalid. In addition, engine settings must not be tampered with.

Owner Maintenance

Any significant or sudden drop in fluid levels, or uneven tyre wear, should be reported without delay. For further information, refer to an MG Authorised Repairer.

In addition to the routine services referred to previously, a number of simple checks must be carried out more frequently. You can carry out these checks yourself and advice is given on the pages that follow.

Daily Checks

- Operation of lights, horn, direction indicators, wipers, washers and warning lights.
- Operation of seat belts and brakes.
- Look for fluid deposits underneath the car that might indicate a leak.

Weekly Checks

- Engine oil level

Note: The engine oil level should be checked more frequently if the car is driven for prolonged periods at high speeds.

- Coolant level.
- Brake fluid level.
- Power steering fluid level.
- Screen washer fluid level.
- Tyre pressures and condition.
- Operate air conditioning.

Special Operating Conditions

If the car is frequently used in dusty conditions or operated in extreme climates where subzero or very high ambient temperatures are normal, more frequent attention may need to be paid to servicing requirements.

If you need to carry out special maintenance operations, refer to Parts and Warranty Statement on the MG Distributors website or contact your MG authorised repairer.

Safety in the Garage

Cooling fans may commence operating after the engine is switched off, and continue operating for a number of minutes. Keep clear of all fans while working in the engine compartment.

If you need to carry out maintenance, observe the following safety precautions at all times:

- Keep your hands and clothing away from drive belts and pulleys.
- If the car has been driven recently, DO NOT TOUCH exhaust and cooling system components until the engine has cooled.
- DO NOT TOUCH electrical leads or components while the engine is running, or with the key in the ignition.
- NEVER leave the engine running in an unventilated area - exhaust gases are poisonous and extremely dangerous.
- DO NOT work underneath the car with a wheel changing jack as the only means of support.

- Ensure sparks and naked lights are kept away from the engine compartment.
- Wear protective clothing, including, where practicable, gloves made from an impervious material.
- Remove metal wrist bands and jewellery before working in the engine compartment.
- DO NOT allow tools or metal parts of the car to make contact with the battery leads or terminals.

Poisonous Fluids

Fluids used in motor vehicles are poisonous and should not be consumed or brought into contact with open wounds. These include: battery acid, antifreeze, brake and power steering fluid, petrol, diesel, engine oil and windscreen washer additives.

For your own safety, ALWAYS read and obey all instructions printed on labels and containers.

Used Engine Oil

Prolonged contact with engine oil may cause serious skin disorders, including dermatitis and cancer of the skin. Wash thoroughly after contact.

Used engine oil should be disposed of correctly. Incorrect disposal can cause a threat to the environment.

Bonnet

Opening the Bonnet

DO NOT drive when the bonnet is retained only by the safety catch.

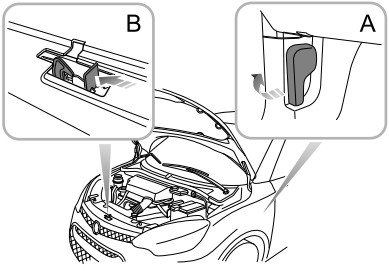

1 From the inside of the car, pull the bonnet release handle (A).

2 Push the safety catch lever left to release the safety catch (B).

3 Raise the bonnet and then fit the support stay into the cut out in the underside of the bonnet firmly.

Closing the Bonnet

Replace the support stay in its retaining clip then lower the bonnet, allowing it to drop for the last 20–30 cm to its closed position.

By attempting to lift the front edge of the bonnet, check if the lock is fully engaged after closing the bonnet. If it is not fully engaged, you must repeat the operation.

Warning When the Bonnet is Open

If the bonnet catch is not fully engaged, the warning light that indicates the vehicle panels are not closed will be illuminated when the ignition is in position II (see warning lights and indicators in Instruments and Controls chapter) .

Engine Compartment

Engine Compartment (LHD)

While working in the engine compartment, always observe the safety precautions listed under "Safety in the Garage", refer to "Maintenance" in "Service and Maintenance" section.

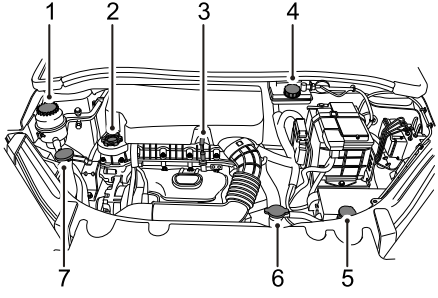

1 Power steering reservoir (black cap)
2 Engine oil filler (yellow cap)
3 Engine oil dipstick (yellow)
4 Brake reservoir (yellow cap)
5 Cooling system expansion tank (white cap)
6 Cooling system pressure cap (silvery white)
7 Washer reservoir (blue cap)

Engine Compartment (RHD)

While working in the engine compartment, always observe the safety precautions listed under "Safety in the Garage", refer to "Maintenance" in "Service and Maintenance" section.

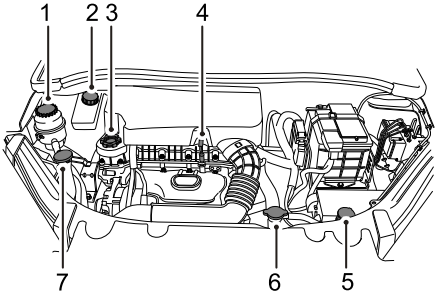

1 Power steering reservoir (black cap)
2 Brake reservoir (yellow cap)
3 Engine oil filler (yellow cap)
4 Engine oil dipstick (yellow)
5 Cooling system expansion tank (white cap)
6 Cooling system pressure cap (silvery white)
7 Washer reservoir (blue cap)

Engine

Engine Oil

ACEA Specification

Use engine oil meeting ACEA specification A1/B1, to ensure optimum protection for your engine, alternatively seek advice from the manufacturer.

Note: Mixing oil additives with the engine oil is not recommended and could damage the engine.

Engine Oil Level Check and Top Up

Driving the car with the engine oil level ABOVE the upper mark, or BELOW the lower mark on the dipstick, will damage the engine.

Take care to avoid spilling engine oil onto a hot engine – a fire may result!

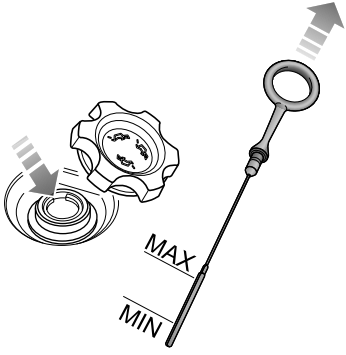

Check the oil level weekly and top up with oil if necessary. Ideally the oil level should be checked with the engine cold and the car resting on level ground. However, if the car is in use and the engine is already warm, wait for at least five minutes after switching off before checking the level.

1 Withdraw the dipstick and wipe the blade clean.

2 Slowly insert the dipstick and withdraw again to check the level, which should NEVER be allowed to fall below the 'MIN' mark on the dipstick.

3 To top up, remove off the oil filler cap and add oil to maintain a level between the 'MAX' and 'MIN' marks on the dipstick.

4 Wait for five minutes and then recheck the level, adding more oil if necessary – DO NOT OVERFILL!

5 Finally, ensure the dipstick and filler cap are replaced.

For engine oil type and capacity refer to the 'Technical Data' Chapter.

IMPORTANT
Check the engine oil more frequently if the car is driven at high speeds for prolonged periods.

Cooling System

Coolant Check and Top Up

DO NOT remove the reservoir cap when the cooling system is hot - escaping steam or water could cause serious injury.

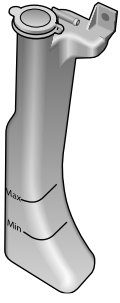

The coolant level should be checked weekly when the cooling system is cold and with the car resting on level ground. If the level is lower than 'MIN' mark, open the expansion tank and top up the coolant. The level should not be higher than 'MAX' mark.

Note: Prevent coolant coming into contact with the vehicle bodywork, coolant will damage paint.

If the coolant level falls appreciably during a short period, and a leak is suspected, arrange for MG Authorised Repairer to examine the car.

Coolant Specification

Please use the coolant (mix of water and antifreeze) which is recommended and certified by the manufacturer. Please refer to 'Recommended Fluids and Capacities'.

Note: In an emergency top up the cooling system with clean water, but be aware of the resultant reduction in frost protection performance. DO NOT top up or refill with other anti-freeze formulations.

Note: DO NOT top up or refill with rust inhibitor or other coolant additives.

Antifreeze

Antifreeze is poisonous and can be fatal if swallowed - keep containers sealed and out of the reach of children. If accidental consumption is suspected, seek medical attention immediately.

Prevent antifreeze coming into contact with the skin or eyes. If this occurs, rinse immediately with plenty of water.

Brakes

Brake Fluid

Brake fluid is highly toxic - keep containers sealed and out of the reach of children. If accidental consumption of brake fluid is suspected, seek medical attention immediately.

Prevent brake fluid coming into contact with the skin or eyes. If this occurs, rinse immediately with plenty of water.

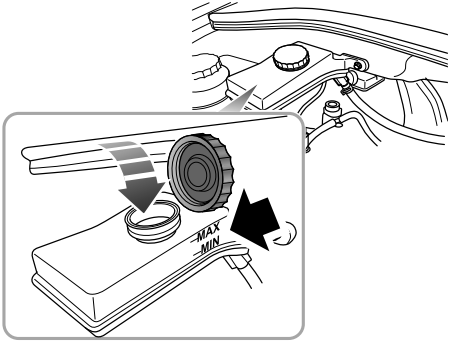

Brake fluid reservoir (RHD)

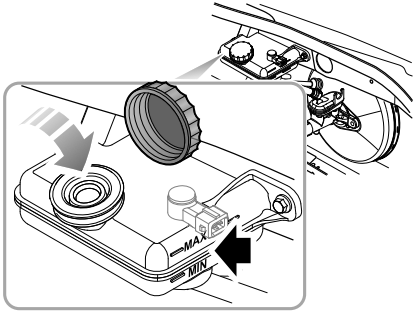

Brake fluid reservoir (LHD)

The brake fluid level should be checked weekly when the system is cold and with the car on level ground.

The fluid level can be seen through the reservoir neck and should be maintained as close to the 'MAX' mark as possible. Do not allow the level to drop below the 'MIN' mark.

Note: Brake fluid will damage painted surfaces. Soak up any spillage with an absorbent cloth immediately and wash the area with a mixture of car shampoo and water.

Brake Fluid Specification

Use the brake fluid which is recommended and certified by the manufacturer. Refer to 'Recommended Fluids and Capacities' in 'Technical Data'.

IMPORTANT
The brake fluid must be replaced every two years.

Power Steering

Power Steering Fluid Check and Top Up

Power steering fluid is highly toxic. Keep containers sealed and out of the reach of children. If accidental consumption of fluid is suspected, seek medical attention immediately.

If power steering fluid should come into contact with the skin or eyes, rinse immediately with plenty of water.

The fluid level should be checked every service. This should be done before the engine is started when the system is cold and with the front wheels pointing straight ahead.

Wipe the filler cap clean to prevent dirt from entering the reservoir. Remove the filler cap and, using a clean lint-free cloth, wipe the dipstick clean. Refit the cap fully and remove again to check the fluid level. If necessary, top up with a fluid meeting specification until the level is between the upper and lower marks on the dipstick (see illustration).

Note: Power steering fluid will damage painted surfaces. Soak up any spillage with an absorbent cloth immediately and wash the area with a mixture of car shampoo and water.

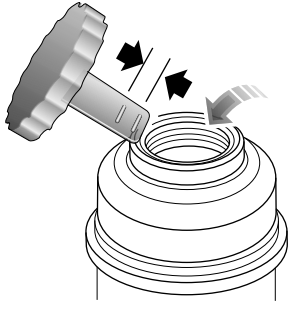

IMPORTANT
Take care not to spill power steering fluid on to a hot engine - a fire may result.

Power Steering Fluid Specification

Use the power steering fluid which is recommended and certified by the manufacturer. Please refer to 'Recommended Fluids and Capacities' in 'Technical Data' chapter.

Battery

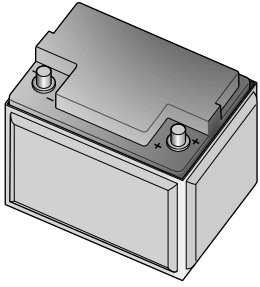

To access the battery, raise the bonnet, release the fixings and move the top of the battery cover aside.

Battery Safety

Batteries contain sulphuric acid, which is corrosive. Wear suitable protective equipment when handling batteries to protect your eyes, skin and clothing.

If a spillage occurs:

- On clothing or the skin - remove any contaminated clothing immediately, flush the skin with large amounts of water, and seek medical attention urgently.
- In the eyes - flush with clean water immediately for at least 15 minutes. Seek medical attention urgently.
- Swallowing battery acid can be fatal unless IMMEDIATE action is taken - seek medical attention urgently.

Battery Disconnection and Replacement

Note: NEVER run the engine with the battery disconnected, or disconnect the battery while the engine is running.

If a battery requires replacement contact an MG Authorised Repairer. Only fit a replacement battery of the same type and specification as the original to maintain the correct vehicle functionality.

Before disconnecting or removing the battery, ensure that the starter switch and all electrical equipment is turned off.

Disconnect the negative (-) cable first and then the positive (+) cable (when reconnecting, connect the positive cable first and then the negative cable).

When lifting the battery from the car , keep the battery upright at all times.

Make sure both the battery clamping plate and retaining strap are fitted securely, this will prevent the battery from moving in the event of an accident or sudden stop.

Note: On vehicles fitted with Stop/Start, after battery disconnection it will be necessary to leave the vehicle in a locked condition for 4 hours in order to assess the battery condition. Failure to do this will result in the loss of the Stop/Start function.

The battery must be disposed of using an approved method, used batteries can be harmful to the environment. It should be recycled by a professional company. Please consult an MG Authorised Repairer more details.

Battery Charging

Note: DO NOT charge the battery if it is suspected of being frozen.

As the battery ages, it may not retain its charge as effectively as when it was new. Cars that are used infrequently, or are used excessively for short journey motoring, or operation in cold climates, may need the battery to be charged regularly.

Pre Charging Battery Appearance Check :

- If the outer casing is broken or there is a leak, DO NOT charge the battery and replace it after finding the reason.
- If the terminal is broken, DO NOT charge the battery and replace it after finding the reason.
- DO NOT attempt to charge a 'bulging' or 'distorted' battery.
- Prior to charging ensure terminals are free from corrosion, apply petroleum jelly to terminal to help prevent corrosion.

Charging Notes:

- Always wear safety glasses when connecting or disconnecting a battery charger.
- Always ensure there the area is well ventilated. Ensure the charging battery has adequate space and does not 'over-heat'.
- DO NOT smoke in the vicinity of a charging battery, and ensure sparks and naked lights are kept well away from the engine compartment.
- Before charging, connect the positive cable at first. After charging, disconnect the negative cable at first.

Battery Charging Operation:

Note: When charging or emergency starting always ensure the negative lead has a good connection to a body earth away from the battery (refers to the section 'Emergency Starting' in the 'Emergency Information' Chapter).

- If charging the battery whilst on the vehicle, please connect the battery charger negative lead to the vehicle body ensuring a good connection.
- Ensure all terminals are free from corrosion.
- Only suitable battery chargers can be used - please consult an MG Authorised Repairer for details.
- During the charging process the battery temperature MUST NOT exceed 40°C.
- DO NOT attempt to charge a battery at temperatures below 0°C.

Battery Maintenance

DO NOT leave electric components switched on when the engine is not running, the battery may become flat and you will not be able to start the engine.

The battery is designed to be maintenance free, so topping-up is unnecessary.

Note: If the vehicle is stored for more than 1 month, remove the earth lead from the battery. Make sure that the ignition switch has been turned off before connecting or disconnecting the earth lead. On vehicles fitted with Stop/Start, when connecting the earth lead again, the vehicle must be left in a locked state for 4 hours to re-calibrate the battery condition.

Failure to adhere to this will inhibit the Stop/Start functionality.

Washers

Windscreen Washer Check and Top Up

Some screenwash products are flammable. DO NOT allow screenwash to come into contact with naked flames or sources of ignition.

When filling the washer reservoir do not allow the fluid to contact any painted surfaces. If any contact is made, wash immediately with shampoo and water.

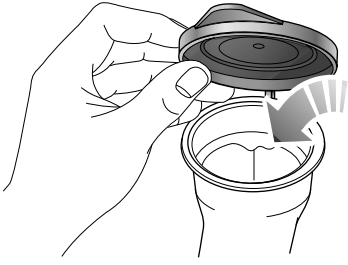

Check the reservoir level every week.

Note: DO NOT use an anti-freeze or vinegar/water solution in the washer reservoir—anti-freeze will damage paintwork while vinegar will damage the windscreen washer pump.

IMPORTANT
• Only use the washer fluid recommended by the manufacturer. Misuse of washer fluid in winter may cause damage to the washer motor due to freezing. • Using the washer switch when there is no washer fluid in the reservoir may cause damage to the washer motor. • Operating the wipers when the windscreen are dry may cause damage to the windscreen and wipers. Please spray the washer fluid before starting the wipers

Washer Nozzles

Operate the washer periodically to check if the windshield washer nozzles are clean and they are in the correct direction.

The windshield washer nozzles are configured during the production, so generally there is no need for adjustments. But, if necessary, you may insert a needle into the nozzle hole, and locate the nozzle by prying it gently, enable the washing fluid spraying directly in the center of the windshield.

If the nozzle is obstructed, insert a needle or thin metal wire into the hole to remove the obstruction.

Washing Fluid Specification

Use the washer fluid recommended and certified by the manufacturer. Refer to "Recommended Fluids and Capacities" in the "Technical Data" section.

Wiper

Wiper Blade

IMPORTANT
• Grease, silicon and petrol based products impair the blade's wiping capability. Wash the wiper blades in warm soapy water and periodically check their condition. • Clean the windscreen frequently, do not use wipers to remove stubborn or ingrained dirt, it will reduce their effect and their life span. • If signs of hardness or cracking in the rubber are found, or if the wipers leave streaks or unwiped areas on the screen, then the wiper blades should be replaced. • Clean the windscreen regularly with an approved glass cleaner and ensure the screen is thoroughly cleaned before fitting replacement wiper blades. • Only fit replacement wiper blades that are identical to the original specification. • Clean ice and snow from around wipers and ensure they are not frozen or otherwise sticking to the windscreen before attempting to operate them.

Replacing Front Wiper Blades

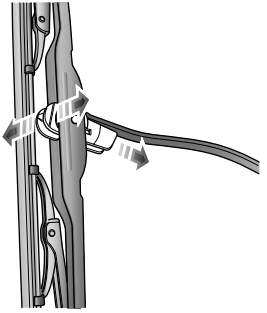

1 Lift the wiper arm away from the windscreen.

2 Squeeze the locating tags to both sides as arrowed and pivot the blade away from the wiper arm.

3 Unhook the blade from the wiper arm and discard.

4 Locate the tip of the new wiper blade in the slot in the wiper arm.

5 Pivot the wiper blade towards the arm until the locating tags engage.

6 Check that the blade is fitted correctly to the arm before positioning on the windscreen.

Replacing Rear Wiper Blades

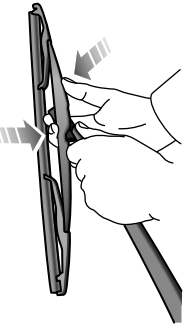

1 Lift the wiper arm away from the tail gate.

2 Pivot the blade away from the wiper arm as arrowed.

3 Unhook the blade from the wiper arm and discard.

4 Locate the tip of the new wiper blade in the slot in the wiper arm.

5 Pivot the wiper blade towards the arm until the locating tags engage.

6 Check that the blade is fitted correctly to the arm before positioning on the tail gate.

Tyres

Overview

- Take extra care when using new tyres for the first 300 miles (500 km).
- Avoid excessive cornering at speed.
- Regularly check tyres for damage and foreign objects - remove any foreign objects from the tread.
- Avoid tyre contact with oils, grease and fuel.
- Ensure valve caps are always fitted.
- If the tyre is to be removed always mark the tyre/wheel orientation to ensure correct refitment.

New Tyres

New tyres may not have the same adhesion properties of the old tyres, please take extra care for 500 km. This action could benefit tyre life. Tyre or rim damage can happen unnoticed. If abnormal vibrations or handling is experienced, or you think tyre or rim damage has occurred please contact an MG Autorised Repairer.

Directional Tyres

Directional tyres are marked with 'direction of rotation' (DOR). To maintain handling characteristics, tyre performance, low road noise and extend tyre life, tyres/wheels must always be fitted with indication arrow showing the correct 'DOR'.

Tyre Life

Correct tyre pressures and moderate driving style can extend tyre life. Recommendations:

- If the vehicle is to be stored for a lengthy time, please move at least one time in two weeks to 'rotate the tyres'
- Tyre pressures should be checked regularly when the tyres are cold.
- Avoid cornering at excessive speeds.
- Regularly check tyres for abnormal wear patterns.

The following factors affect the tyre life.

Tyre Pressures

Incorrect tyre pressures can result in poor driving characteristics and a shortened tyre life. Tyre pressures

should be checked at least once a month, and once prior to each long-distance journey.

Driving Style

Excessively harsh acceleration and braking whilst cornering will reduce tyre life.

Wheel Balance

Shaking or vibration of the vehicle or steering mechanism can indicate out of balance wheels. It is important to rectify this quickly as to prevent wear on steering and suspension components and shorten tyre life.

Wheel Alignment

Incorrect wheel alignment can cause excessive tyre wear and affect vehicle safety. If the tyres show signs of abnormal wear seek advice from an MG Authorised repairer.

Caring for Your Tyres

DEFECTIVE TYRES ARE DANGEROUS! DO NOT drive if any tyre is damaged, is excessively worn, or is inflated to an incorrect pressure.

Always drive with consideration for the condition of the tyres, and regularly inspect the tread and side walls for any sign of distortion (bulges), cuts or wear.

Note: If possible, protect tyres from contamination by oil, grease and fuel.

Tyre Pressures

Before a long distance journey, the tyre pressure must be checked.

Check the pressures (including the spare wheel) at least every month, when the tyres are cold.

If it is necessary to check the tyres when they are warm, you should expect the pressures to have increased by 0.3 to 0.4 bar (4.35 to 5.8 psi). In this circumstance, NEVER let

air out of the tyres in order to match the recommended pressures (cold).

Valves

Keep the valve caps screwed down firmly - they prevent dirt from entering the valve. Check the valve for leaks (listen for a tell-tale hissing) when you check the tyre pressure.

Punctured Tyres

Your vehicle is fitted with tyres which may not leak if penetrated by a sharp object, provided the object remains in the tyre. If you are aware of this occurring, reduce speed immediately and drive with caution until the spare wheel can be fitted, or repairs undertaken.

Note: If the sidewall of the tyre is damaged or distorted, replace the tyre immediately, do not attempt a repair.

Tyre Wear Indicators

Tyres fitted as original equipment have wear indicators moulded into the tread pattern at several points around the circumference.

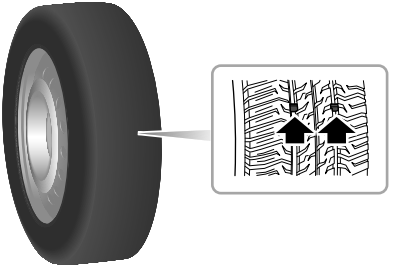

When the tread has worn down to 1.6mm, the indicators will come to the surface of the tread pattern, producing the effect of a continuous band of rubber across the width of the tyre.

IMPORTANT
A tyre MUST be replaced as soon as a wear indicator becomes visible.

Replacement Tyres

DO NOT replace the wheels with wheels of any other type. Alternative wheels, of a different specification, may adversely affect the car's driving characteristics.

Always have replacement wheels and tyres balanced before use.

Wheel Fitment Rotation

In order to balance tyre wear, it may benefit from rotating tyre position. Wheels can be swapped front to rear in order to even spread tyre wear across all tyres.

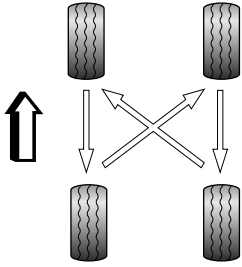

Directional tyres CANNOT be swapped from side to side.

Snow Chains

Unsuitable snow chains could damage the tyres, wheels, suspension, brakes or bodywork of your car.

In use, always observe the following precautions:

- Fit snow chains to the front wheels only.
- The thickness of snow chains shouldn't exceed 20mm.

- Always adhere to the snow chain fitting and retensioning instructions and the speed limitations for varying road conditions.
- DO NOT exceed speeds of 50km/h.
- Avoid tyre damage and excessive chain wear by removing snow chains when driving on snow free roads.

Note: If you drive on the snowy and icy roads, it is recommended to use winter tyres. Consult an MG Authorised Repairer for details.

Cleaning and Vehicle Care

Observe all safety precautions on cleaning products; do not drink fluids and keep them away from the eyes.

Washing Your Car

Some high pressure cleaning systems will penetrate door, window seals, and damage lock mechanisms. DO NOT aim water jets directly at components that might be easily damaged.

In order to preserve the paint finish on your car, please observe the following care points:

- DO NOT use hot water to wash the car.
- DO NOT use detergents or washing up liquid.
- In hot weather, DO NOT wash the car in direct sunlight.
- When using a hose, DO NOT aim the water directly at window, door seals, or through wheel apertures onto the brake components.

If the car is particularly dirty, use a hose to flush grime and grit from the bodywork, prior to washing. Then, wash the car using cold or lukewarm water containing a good quality wash and wax shampoo. Always use plenty of water to ensure that grit is flushed from the surface and not ground into the paintwork. After washing, rinse the bodywork with clean water and dry off with a chamois leather.

Cleaning the Underside

DO NOT use a high pressure hose to clean the engine compartment – damage to the car's electronic systems may occur.

From time to time, but particularly during winter months when salt has been used on the roads, use a hose to wash the underside of the car. Flush away accumulations of mud and thoroughly clean those areas where debris can easily collect (wheel arches and panel seams, for example).

Removing Tar Spots

Use white spirit to remove tar spots and stubborn grease stains from the paintwork. Then wash the area immediately with soapy water to remove all traces of the spirit.

Body Protection

After washing, examine the paintwork for damage. If the damage has revealed bare metal, use a coloured primer first, then apply the correct colour base coat and finish off with a lacquer pencil, if appropriate. Carry out this treatment after washing but before polishing or waxing.

More extensive damage to paint or bodywork must be repaired in accordance with the manufacturer's recommendations. Failure to do this will invalidate the Anti-Corrosion Warranty. If in doubt, ask your MG Authorised Repairer.

Polishing the Paintwork

DO NOT use car polish containing coarse abrasives – these will remove the paint film and damage the gloss finish.

Occasionally treat the paint surface with an approved polish containing the following properties:

- Very mild abrasives to remove surface contamination without removing or damaging the paint.
- Filling compounds that will fill scratches and reduce their visibility.
- Wax to provide a protective coating between the paint and the elements.

Note: If possible, avoid applying polish or wax products to window glass and rubber seals.

Wiper Blades

Wash in warm soapy water. DO NOT use spirit or petrol based cleaners.

Windows and Mirrors

Regularly clean all windows, inside and out, using an approved glass cleaner.

Windscreen: In particular, clean the outside of the screen with glass cleaner after washing the car with wash and wax products, and before fitting new wiper blades.

Rear screen: clean the inside with a soft cloth, using a side to side motion to avoid damaging the heating elements.

Note: DO NOT scrape or use abrasive cleaners on the inside of the rear screen – this will damage the heating elements.

Mirrors: Wash with soapy water. Use a plastic scraper to remove ice. DO NOT use abrasive cleaning compounds or metal scraper.

Vehicle Graphics Care

Wash Regularly

Wash whenever the vehicle appears dirty. Contaminants allowed to remain on the vehicle graphics may be more difficult to remove during cleaning. Rinse off as much dirt and grit as possible with a low pressure spray of water.

Use a wet, non-abrasive detergent such as 3M™ Car Wash Soap 39000 or Meguia's NXT Generation® Car Wash, or Deep Crystal® Car Wash and a soft, clean cloth or sponge.

Rinse thoroughly with clean water. To reduce water spotting, immediately use a silicone squeegee to remove water (taking care around the edges of the graphics) to remove water and finish with a clean microfiber cloth.

Automated Car Wash

Brush-type car washes are not recommended as they can abrade the graphics and cause the edges to lift or chip, as well as dulling the graphic's appearance.

Pressure Washing

The use of a pressure washer is not recommended as this may damage the vehicle graphic.

Difficult Contaminants

Soften difficult contaminants such as bug splatter, bird droppings, tree sap and similar contaminants by soaking them for several minutes with hot soapy water. Rinse thoroughly and dry. If further cleaning is needed, test one of these products in an inconspicuous area to ensure no damage to the graphics: Meguiar's Gold Class™ Bug & Tar Remover or 3M™ Citrus Base Cleaner. Spot clean the contaminants. Do not use rough scrubbing or abrasive tools, which will scratch the graphics. Wash and rinse off all residue immediately.

Fuel Spills

Wipe off immediately to avoid degrading the graphics and adhesive. Then wash, rinse and dry as soon as possible.

Cleaning the Interior

Plastic Materials

Clean plastic-faced materials with diluted upholstery cleaner, then wipe with a damp cloth.

Note: DO NOT polish dashboard components – these should remain non-reflective.

Carpet and Fabrics

Clean with diluted upholstery cleaner - test a concealed area first.

Leather

Clean leather trim with warm water and a non-detergent soap. Dry and polish the leather with a dry, clean, lint-free cloth.

Note: DO NOT use petrol, detergents, furniture creams or polishes as cleaning agents.

Instrument Pack, Clock, Audio System and Navigation Display

Clean with a dry cloth only. DO NOT use cleaning fluids or sprays.

Airbag Module Covers

DO NOT allow these areas to be flooded with liquid and DO NOT use petrol, detergent, furniture cream or polishes.

To protect damage to the airbag SRS, the following areas should be cleaned sparingly with a damp cloth and upholstery cleaner ONLY:

- Steering wheel centre pad.
- Area of dashboard containing the passenger airbag.
- Area of roof lining and front pillar finishers which enclose the side head impact protection modules.

Seat Belts

DO NOT use bleaches, dyes or cleaning solvents on seat belts.

Extend the belts, then use warm water and a non-detergent soap to clean. Allow the belts to dry naturally; DO NOT retract them or use the car unitl they are completely dry.

Technical Data

214 Technical Data Dimensions

215 Weights

216 Major Parameters of Engine

217 Recommended Fluids and Capacities

218 Wheel Alignment (Unladen Condition)

218 Wheels and Tyres

218 Tyre Pressures (Cold)

Technical Data Dimensions

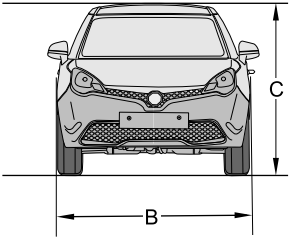

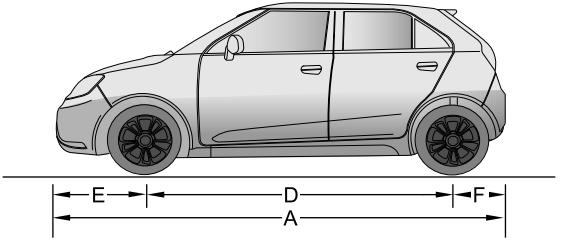

Item, units	Parameter
Overall length A, mm	4018
Overall width B, mm (including exterior-view mirror)	1728 (1887)
Overall height C (unladen), mm	1507
Wheelbase D, mm	2520
Front Overhang E, mm	859
Rear Overhang F, mm	639

Item, units	Parameter
Front wheel track, mm	1505 1513 (7J×16)
Rear wheel track, mm	1493 1501 (7J×16)
Minimum turning circle diameter, kerb-to-kerb	10.4
Fuel tank capacity, l	45
Luggage capacity, l	256

Weights

Item, units	Parameter
Person in cab, person	5
Unladen vehicle weight (kerb), kg	1126 to 1165
Gross vehicle weight, kg	1665 to 1685
Extra Gross train weight, kg	1865 to 1885

Note: Please refer to the vehicle identification label for the exact GTW (gross train weight) for your vehicle.

Towing Weights

Item, units	Parameter
Towing limit un-braked, kg	200
Towing limit braked, kg	200

Major Parameters of Engine

Item, units	Parameter
Bore × Stroke, mm × mm	75 × 84.8
Capacity, l	1.498
Compression ratio	10.5:1
Maximum power, kw	78
Engine speed to develop maximum power, rev/min	6000
Maximum torque, Nm	137
Engine speed to develop maximum torque, rev/min	4700
No load idle speed, rev/min	670±50
Fuel type, RON/CN	UNLEADED 95RON to EN228 SPEC

Recommended Fluids and Capacities

Name	Fluid type	Capacity
Engine oil, l	A1/B1 5W-20	4.5
Engine coolant, l	Glycol (OAT)	4.9 (0.7 for expansion tank)
Manual transmission fluid, l	MTF 94	1.8
Brake fluid, l	DOT 4 (Low Viscosity)	0.73
Power steering fluid, l	Dexron III	0.92
Washer fluid, l	Qx 35	2.5
Air conditioning refrigerant, g	R-1234yf	450±25

Wheel Alignment (Unladen Condition)

Item		Parameter
Front	Camber angle	-0°36'±45'
	Kingpin caster angle	3°33'±45'
	Toe in (one side)	0°8'±15'
	Kingpin inclination (non adjustable)	12°22'±45'
Rear	Camber angle	-1°16'±45'
	Toe in (Total)	0°29'±20'

Wheels and Tyres

Wheel Size	5.5J×14	6.5J×16	7.0J×16
Tyre Size	185/70 R14	195/55 R16	195/55 R16

Tyre Pressures (Cold)

Tyre	Unladen
Front Wheel	210kPa/2.1bar/31psi
Rear Wheel	210kPa/2.1bar/31psi

A

ABS (Anti Lock Braking System) 136
ABS Warning Light 22,137
Accessory Power Socket 45
Aerial (Antenna) 69, 86
Air Conditioning (Climate Control) 50
A/C Air Distribution 50, 51
A/C Air Distribution Control 55– 57
A/C Air Recirculation 58
Air Vents 50– 51
Airbag SRS 95– 102
Airbag SRS Warning Light 21, 99
Airbag, Driver And Passenger 95
Airbag – Side/Head/Curtain 99
Airbag – Side/Pelvis/Thorax 98
Alarm Status Indicator 118
Alarm System 116
Ambient Temperature 12, 16
Anti Freeze 188
Audio Equipment 59– 86
Audio Sound Settings 63, 74
Automatic Function – Courtesy Lights 44
Auto Lights 26
Aux Devices – Audio 69, 84
Average Fuel Consumption 13, 17
Average Speed 14, 18

B

Band Button - Audio Controls 65, 78
Battery - Handset 113
Battery Charging 21, 194
Battery Disconnection And Removal 193- 195
Battery Maintenance 193- 195
Blower (Heater) 52
Blower (A/C)* 55
Bluetooth Settings 77
Bonnet Opening 182
Booster Cables 155
BDW (Brake Disc Wiping) 134
Brake Fluid 178, 189
Brake Fluid Specification 190
Brake Lights 174
Brake Warning Light 22
Brakes 134
Braking in an Emergency 136
Bulb Replacement 175
Bulb Specification 174

C

Capacities 217
Catalytic Converter 128
CD Player 60, 70

INDEX

CD Playing 67
Changing a Wheel and Tyre 165 - 167
Child Proof Locks 115
Child Restraints and Seats 103 - 110
Cleaning - Car Interior 210 - 211
Cleaning - Paintwork 207 - 209
Climate Control 50
Clock and Time 74, 76
Cold Climates 123
Coolant Check, Top-Up And Replacement 178, 187
Coolant Specification 187 - 188
Cooling System 187
Cruise Control* 25, 145, 146
Cup Holders 48

D

Daily Checks 179
Data – Technical 214 – 218
Daytime Running Lights 29
Dimensions 214
Dipped Beam Headlights 26, 28, 172
Dipstick 185
Direction Indicator Bulb - Front 172
Direction Indicator Bulb - Rear 172
Direction Indicator Lights 20, 28
Disabling Passenger Air-Bag 100
Door Open Indicator 24

E

Ejecting A CD 67, 82
Ejecting USB Device Safely 68, 83
EBA (Electronic Brake Assist) 135
EBD (Electronic Brake Force Distribution) 135
Emission Control 179
Engine Fault Light 22, 23
Engine Immobilisation 24, 116
Engine Number 3
Engine Coolant Temperature 23
Engine Oil 185- 186
Environmental Driving 125

F

Fast Forward – Audio Controls 67, 82
Fog Light Bulb - Rear 174
Fog Lights - Rear 21, 27
Follow-Me-Home Lights (Lights Off Delay) 29
Foot Brake 134
Front Passenger Lower Cubby Box 47
Front Wiper Operation 32
Front Wiper Blade Replacement 199
Fuel Consumption 13, 17
Fuel Cut-Off Switch 131
Fuel Filler 131

F

Fuel Filling 131
Fuel Gauge 8
Fuel Specification 216
Fuel System 130
Fuses, Replacement And Colour 168
Fuse Specifications 170- 172
Fuse Box (Passenger Compartment) 169- 171
Fuse Boxes (Engine Compartment) 172- 173

G

Gear Change Display 10
Gear Change Warning Indicator 10
Glovebox 47

H

Handbrake 137
Hazard Warning Lights 29, 30
Hazard Warning Triangle 154
Head Restraints 89
Headlight Bulb 174
Headlight Flash 28

H

Headlight Levelling 30, 31
Heated Mirrors 37
Heated Rear Screen 53, 57
Heavy Loads 151
Hill Hold Function 135
Horn 36

I

Identification Numbers 3
Ignition Switch 121
Indicators 28
Instrument Pack 7
Instrument Panel Storage 47
Intelligent Stop Start, Automatic Shutdown 142
Intelligent Stop Start, Automatic Start 142
Intelligent Stop Start, Failure 144
Intelligent Stop Start, Isolation control 141
Intelligent Stop Start, Operation 141
Intelligent Stop Start, Status Lamp 25
Intelligent Stop Start, Warning Lamp 25
Interior Door Handles 120
Interior Lights 44, 176

INDEX

J

Jacking and Jack Positioning 165 - 167
Jump Leads 155- 156
Jump Starting 155- 156

K

Key 112

L

Lighting Switch 26
Load Carrying 151- 152
Loadspace Light Bulb 175
Locking 112, 116, 117
Locking - Speed Related 120
Locking Wheel Nuts 160, 166
Low Oil Pressure 21

M

Main Beam Headlights 20, 28, 174
Maintenance 127, 177- 211
Manual Transmission 133
Message Centre 9- 19
Mirrors - Door 37- 38
Mirrors - Interior 39
Mirrors Cleaning 208- 209
Mirrors - Folding 39
Mislock 117

N

Next Service 14, 18
Number Plate Lamps 174, 176

O

Odometer 11, 15
Oil Level Check – Engine 185
Oil Top-Up 185
"One-Touch" Windows 43
Owner Maintenance 179- 180

P

Parking Aid 147- 148
Particle/Pollen Filter 51
Passenger Air-Bag Disabling 100, 101
Phone Connection Via Bluetooth® 84
Poisonous Fluids/Gases 181
Power Steering Fluid Check And Top-Up 191- 192

R

Rain Sensor* 32
Rear Fog Guard Lights 21
Rear Light Bulbs 174
Rear Seats - Folding 91
Rear Wiper Operation 33
Rear Wiper Blade Replacement 200
Rear Window Isolation Switch 42
Recirculation 54 58
Recommended Fluids 217
Recovery 157
Remote Handset 116 - 119
Reverse Light Bulbs 174
Routine Servicing 178
Running-In 125

S

Safety In The Garage 180
Search Tuning – Audio Controls 65, 78
Seat Belt Care 93
Seat Belt Pre-Tensioners 94
Seat Belts 92 – 94
Seat Belt Warning 21
Seat Cushion Height (Driver Only) 90 - 94
Seats 88 - 90
Steering Column Adjustment 35
Steering Lock 121- 122
Sun Visor 41

T

TA - Traffic Announcement Button – Audio Controls, 66, 79
Tachometer 8
Telephones 85- 86
Thirty-Minute Play Function – Audio Controls 62, 73
Tool Kit Identification 160
Top Tether Restraint 109
Towing Eyes 157
Towing Weights 215
Towing For Recovery Precautions 157- 159
Track Search - Audio Controls 67, 81
Traction Control (TC) 24, 139, 140
Transporter or Trailer Lashing 159
Transmission Number 3
Trip Computer 10- 19
Trip Recorder 11, 15
Tyre Pressures 202, 203, 218
Tyre Repair 161- 163
TPMS - (Tyre Pressure Monitoring System) 14, 18, 24, 149
Tyre Wear Indicators 204
Tyres 202– 206, 218

U

Unlocking 112, 116, 117, 119
USB Socket 68, 82
Used Engine Oil 181

V

Vanity Mirrors 41
Variable Delay - Wipers 32
Vehicle Identification Number 3, 4
Vehicle Information Display 10, 11, 15
Vehicle Recovery 157- 159
Ventilation 50, 51
VIN Plate 3, 4

W

Warning Lights 20- 25
Warning Triangle 154
Washer Jets, Fluid and Top-Up 197 - 198
Washing the Car 207
Weekly Checks 179
Weights 215
Wheel Changing 165
Wheels 218
Wheel Nut Torque 165
Wheel Alignment 218
Windows 42 - 43
Window Lift Switch 42
Windscreen Wipers 199
Wiper Blade Replacement 200- 201
Wiper Controls 32- 34

MG MOTOR UK

Lowhill Lane, Longbridge,

Birmingham B31 2BQ

www.mg.co.uk

Version 2 2015