CRUISE CONTROL SYSTEM

PRECAUTION

1. EXPRESSIONS OF IGNITION SWITCH

(a) The type of ignition switch used on this model differs according to the specifications of the vehicle.

Switch Type		Ignition Switch (position)	Engine Switch (condition)
Expression	Ignition switch off	LOCK	Off
	Ignition switch on (IG)	ON	On (IG)
	Ignition switch on (ACC)	ACC	On (ACC)
	Engine start	START	Start

2. HANDLING PRECAUTION FOR CRUISE CONTROL SYSTEM

(a) Turn the cruise control main switch off when not using the cruise control system.

(b) Be careful as the vehicle speed increases when driving downhill with the cruise control system on.

(c) The + (ACCEL)/RES (RESUME) operation changes according to the cruise control system status. When the cruise control system is operating, the + (ACCEL) function operates. When the cruise control system is not operating, the RES (RESUME) function operates.

(d) If the CRUISE main indicator light blinks while the cruise control system is operating, turn the cruise control main switch off to reset the cruise control system. After the reset, if the cruise control main switch cannot be turned on, or the cruise control system is canceled immediately after turning the cruise control main switch on, the system may have a malfunction.

(e) Do not use the cruise control system where the road conditions are as follows:
- Heavy traffic
- Steep decline
- Roads with sharp turns
- Icy or snowy roads
- Slippery roads

PARTS LOCATION

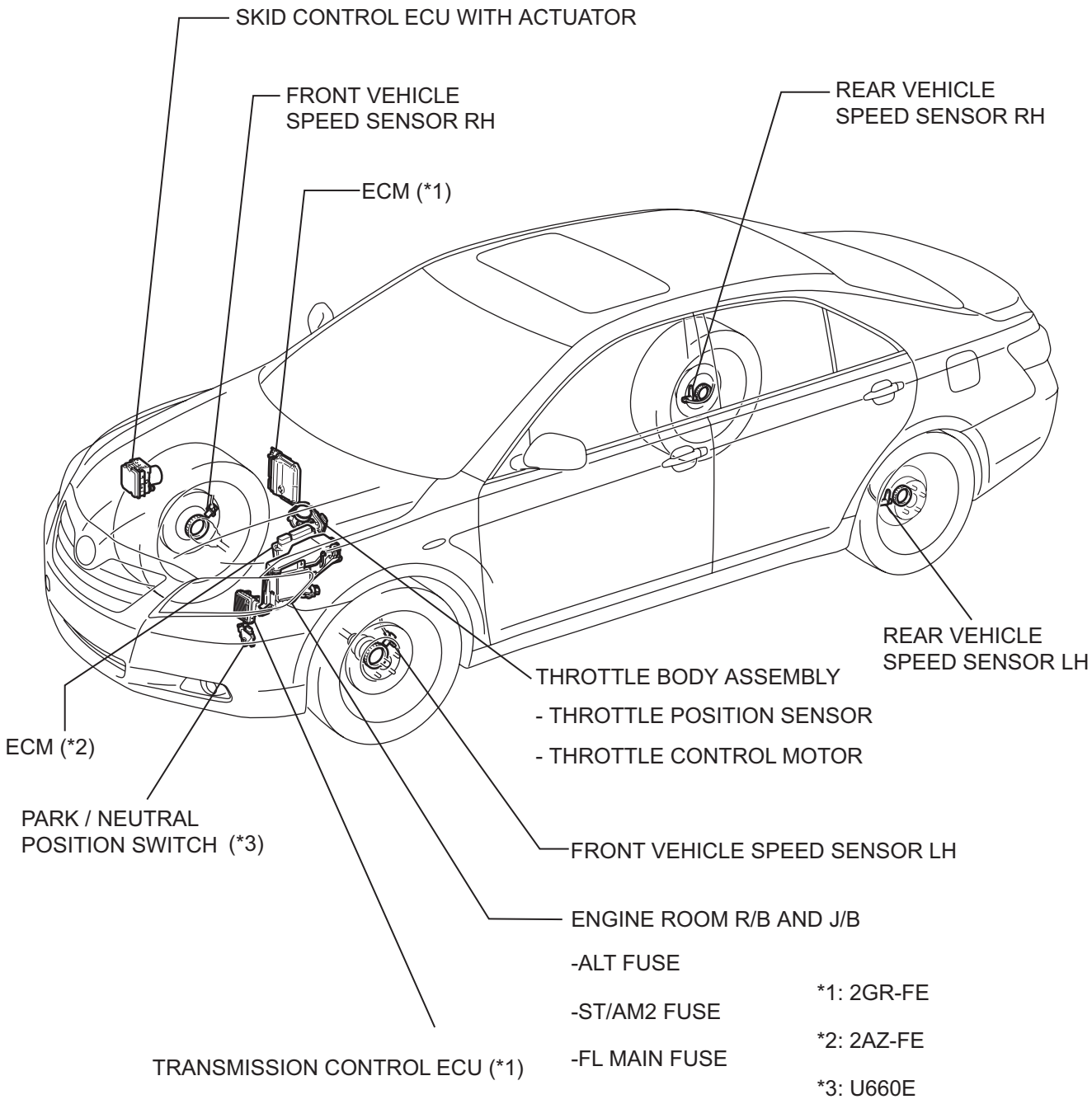

CC

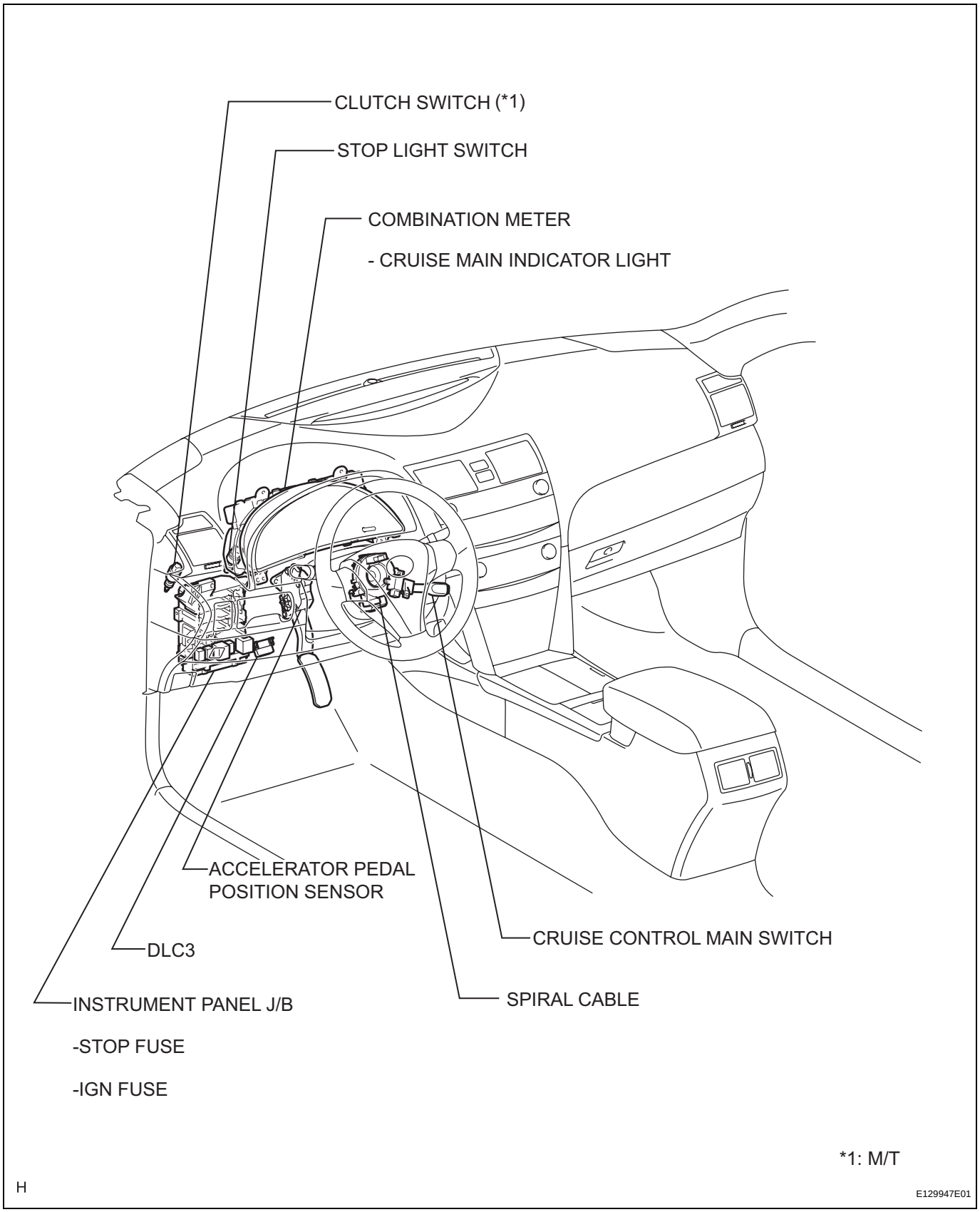
CLUTCH SWITCH (*1)
STOP LIGHT SWITCH
COMBINATION METER
- CRUISE MAIN INDICATOR LIGHT
ACCELERATOR PEDAL POSITION SENSOR
DLC3
INSTRUMENT PANEL J/B
-STOP FUSE
-IGN FUSE
CRUISE CONTROL MAIN SWITCH
SPIRAL CABLE
*1: M/T
H
E129947E01

SYSTEM DIAGRAM

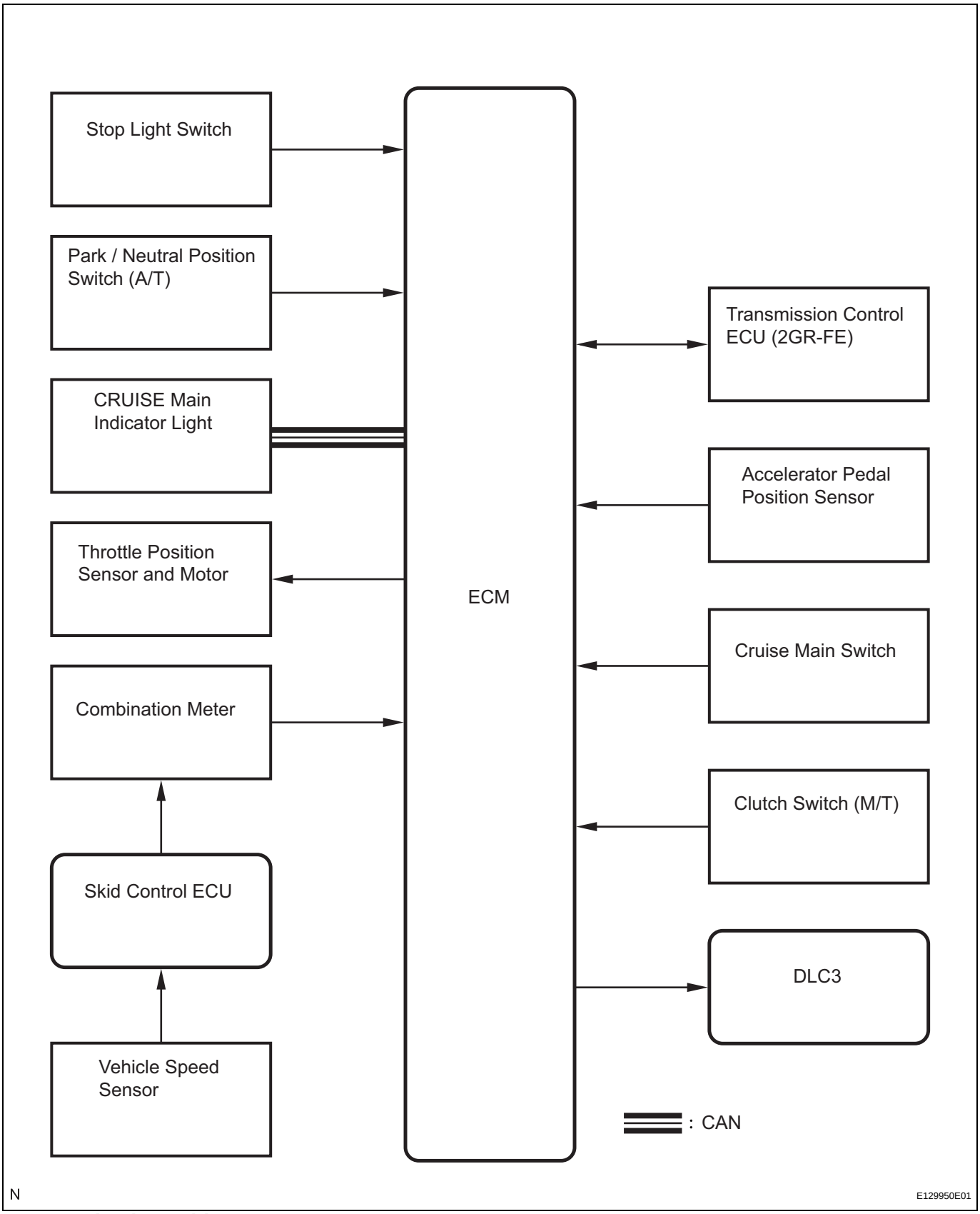

Communication Table:

Sender	Receiver	Signal	Line
ECM	Combination Meter ECU	CRUISE main indicator operation signal	CAN

SYSTEM DESCRIPTION

1. CRUISE CONTROL SYSTEM

This system is controlled by the ECM, and is activated by the throttle position sensor and motor. The ECM controls the following functions: ON-OFF, - (COAST)/SET, + (ACCEL)/RES (RESUME), CANCEL, vehicle speed operation, motor output control, and overdrive control.

- The ECM compares the driving vehicle speed from the speed sensor with the stored vehicle speed set through the cruise control main switch. The ECM instructs the throttle valve motor of the throttle body assembly to close the valve when the driving speed is greater than the stored speed, and instructs it to open the valve when the driving speed is less than the stored speed.
- The ECM receives signals such as ON-OFF, - (COAST)/SET, + (ACCEL)/RES (RESUME), and CANCEL from the cruise control main switch and executes the command.
- The ECM illuminates the combination meter's CRUISE main indicator light when it receives a cruise control main switch ON signal.
- The ECM cancels the cruise control system when the brake pedal is depressed and the ECM receives a stop light switch signal.
- The ECM cancels the cruise control system when the shift lever is moved from the D to the N position or the transmission is shifted to the 3rd, 2nd, or 1st gear with the shift lever in the S position, and the ECM receives a park/neutral position switch signal.
- The ECM cancels the cruise control system when the clutch pedal is depressed and the ECM receives a clutch switch signal.

2. LIMIT CONTROL

(a) Low speed limit

The lowest possible limit of the speed setting range is set at approximately 40 km/h (25 mph). The cruise control system cannot be set when the driving vehicle speed is below the low speed limit. Cruise control operation will be automatically canceled but the stored vehicle speed will be retained when the vehicle speed drops below the low speed limit 40 km/h (25 mph) while the cruise control is in operation.

(b) High speed limit

The highest possible limit of the speed setting range is set at approximately 200 km/h (125 mph). The cruise control system cannot be set when the driving vehicle speed is over the high speed limit. Also, + (ACCEL)/RES (RESUME) cannot be used to increase speed beyond the high speed limit.

3. OPERATION OF CRUISE CONTROL

The cruise control main switch operates 7 functions: SET, - (COAST), TAP-DOWN, RES (RESUME), + (ACCEL), TAP-UP, and CANCEL. The SET, TAP-DOWN, and - (COAST) functions, and the RES (RESUME), TAP-UP, and + (ACCEL) functions are operated with the same switch. The cruise control main switch is an automatic return type switch which turns on only while operating it in the direction of each arrow and turns off after releasing it.

(a) SET CONTROL

The vehicle speed is stored and constant speed control is maintained when pushing the cruise control main switch to - (COAST)/SET while driving with the main switch on (the CRUISE main indicator light is on), and the vehicle speed is within the set speed range (between the low and high speed limits).

(b) - (COAST) CONTROL

When the cruise control main switch is set to - (COAST)/SET and held in that position while the cruise control system is operating, the ECM sends a "throttle valve opening angle 0°" demand signal to the cruise control system. Then the vehicle speed, when the cruise control main switch is released, is stored and maintained.

HINT:

An actual throttle valve opening angle of 0° is not possible due to the idle speed control, etc.

(c) TAP-DOWN CONTROL

When tapping down the cruise control main switch to - (COAST)/SET (for approximately 0.6 seconds) while the cruise control system is in operation, the stored vehicle speed decreases each time by approximately 1.6 km/h (1.0 mph). When the cruise control main switch is released from - (COAST)/SET and the difference between the driving and stored vehicle speed is more than 5 km/h (3 mph), the driving vehicle speed is stored and constant speed control is maintained.

(d) ACCELERATION CONTROL

The throttle valve motor of the throttle body assembly is instructed by the ECM to open the throttle valve when + (ACCEL)/RES (RESUME) on the cruise control main switch is pressed and held while the cruise control system is in operation. When the cruise control main switch is released from + (ACCEL)/RES (RESUME), the vehicle speed is stored and the vehicle is controlled at a constant speed.

(e) TAP-UP CONTROL
When tapping up the cruise control main switch to + (ACCEL)/RES (RESUME) (for approximately 0.6 seconds) while the cruise control system is in operation, the stored vehicle speed increases each time by approximately 1.6 km/h (1.0 mph). However, when the difference between the driving and the stored vehicle speed is more than 5 km/h (approximately 3.1 mph), the stored vehicle speed will not be changed.

(f) RESUME CONTROL
If cruise control operation was canceled with the stop light switch or the CANCEL switch, and if driving speed is within the limit range, pushing the cruise control main switch to + (ACCEL)/RES (RESUME) restores vehicle speed memorized at the time of cancellation, and maintains constant speed control.

(g) MANUAL CANCEL CONTROL
Performing any of the following cancels the cruise control system while in operation (the stored vehicle speed in the ECM is maintained).
- Depressing the brake pedal
- Depressing the clutch pedal
- The shift lever is moved from the D to the N position or the transmission is shifted to the 3rd, 2nd, or 1st gear with the shift lever in the S position.
- Pulling the cruise control main switch to CANCEL
- Turning the cruise control main switch off (the stored vehicle speed in the ECM is not maintained).

4. AUTO CANCEL (FAIL-SAFE)

This system has an automatic cancellation function (fail-safe) (See page CC-16).

HOW TO PROCEED WITH TROUBLESHOOTING

HINT:
- Use the following procedures to troubleshoot the cruise control system.
- *: Use the intelligent tester.

1 VEHICLE BROUGHT TO WORKSHOP

NEXT

2 PROBLEM SYMPTOM CONFIRMATION

NEXT

3 CHECK CAN COMMUNICATION SYSTEM*

Refer to PRECAUTION (See page CA-1).

(a) Check for output DTCs.

Result

Result	Proceed to
CAN DTC is not output	A
CAN DTC is output	B

HINT:
The ECM of this system is connected to the CAN communication system. Therefore, before starting troubleshooting, make sure to check that there is no trouble in the CAN communication system.

B → **PROCEED TO "CAN COMMUNICATION SYSTEM"**

CC

A

4 DTC CHECK AND CLEAR*

Refer to DTC CHECK / CLEAR (See page CC-16).

NEXT

5 DTC CHECK (OTHER THAN CAN SYSTEM DTC)*

Result

Result	Proceed to
DTC is not output	A
DTC is output	B

A → **GO TO STEP 7**

B

6	**DTC CHART**

Refer to DIAGNOSTIC TROUBLE CODE CHART (See page CC-18).

NEXT

GO TO STEP 10

7	**PROBLEM SYMPTOM CONFIRMATION**

Result

Result	Proceed to
Symptom occurs	A
Symptom does not occur	B

A → **GO TO STEP 9**

B

8	**SYMPTOM SIMULATION**

Refer to ELECTRONIC CIRCUIT INSPECTION PROCEDURE (See page IN-40).

NEXT

Go to step 7

CC

9	**PROBLEM SYMPTOMS TABLE**

Refer to the PROBLEM SYMPTOMS TABLE (See page CC-11).

NEXT

10	**CIRCUIT INSPECTION**

NEXT

11	**TERMINALS OF ECM**

Refer to TERMINALS OF ECM (See page CC-13).

NEXT

12	IDENTIFICATION OF PROBLEM

NEXT

13	REPAIR OR REPLACE

NEXT

14	CONFIRMATION TEST

NEXT

END

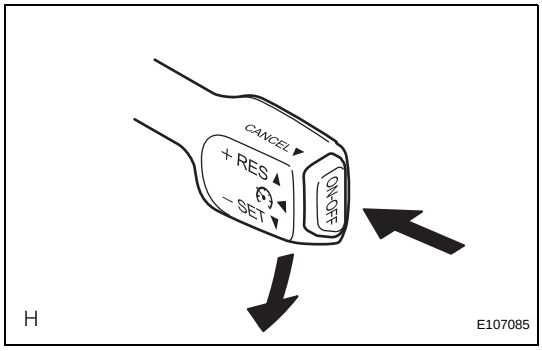

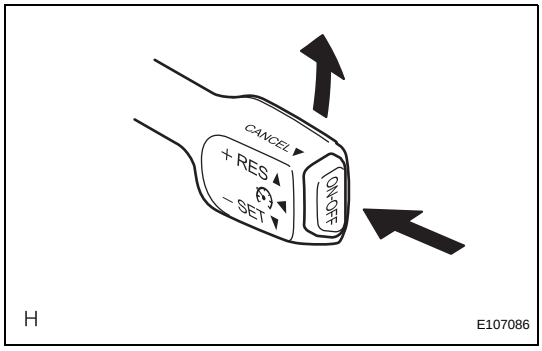

ROAD TEST

1. PROBLEM SYMPTOM CONFIRMATION

(a) Inspect the SET function.
- (1) Turn the cruise control main switch on.
- (2) Drive at the required speed (40 km/h (25 mph) or higher).
- (3) Push the cruise control main switch to - (COAST)/SET.
- (4) After releasing the switch, check that the vehicle cruises at the set speed.

(b) Inspect the ACCELERATION function.
- (1) Turn the cruise control main switch on.
- (2) Drive at the required speed (40 km/h (25 mph) or higher).
- (3) Push the cruise control main switch to - (COAST)/SET.
- (4) Check that vehicle speed increases while the cruise control main switch is pushed to + (ACCEL)/RES (RESUME), and that the vehicle cruises at the newly set speed when the switch is released.
- (5) Push the cruise control main switch to + (ACCEL)/RES (RESUME) and then release it immediately. Check that vehicle speed increases by approximately 1.6 km/h (1.0 mph) (tap-up control).

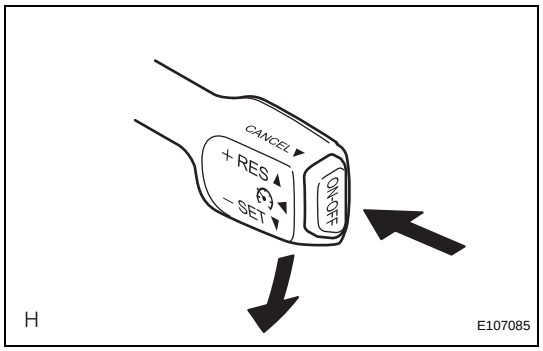

(c) Inspect the - (COAST) function.
  (1) Turn the cruise control main switch on.
  (2) Drive at the required speed between 40 km/h (25 mph) and 200 km/h (125 mph).
  (3) Push the cruise control main switch to - (COAST)/SET.
  (4) Check that vehicle speed decreases while the cruise control main switch is pushed to - (COAST)/SET, and the vehicle cruises at the newly set speed when the switch is released.
  (5) Push the cruise control main switch to - (COAST)/SET, and then release it immediately. Check that vehicle speed decreases by approximately 1.6 km/h (1.0 mph) (tap-down control).

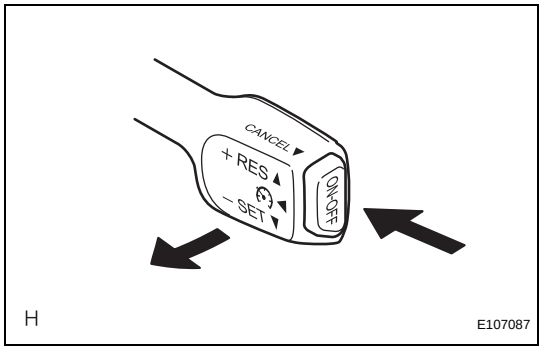

(d) Inspect the CANCEL function.
  (1) Turn the cruise control main switch on.
  (2) Drive at the required speed between 40 km/h (25 mph) and 200 km/h (125 mph).
  (3) Push the cruise control main switch to - (COAST)/SET.
  (4) When performing any one of the following, check that the cruise control system is canceled and that the normal driving mode is reset.
    - Depressing the brake pedal
    - Depressing the clutch pedal
    - The shift lever is moved from the D to the N position or the transmission is shifted to the 3rd, 2nd, or 1st gear with the shift lever in the S position
    - Turning the cruise control main switch off
    - Pulling the cruise control main switch to CANCEL

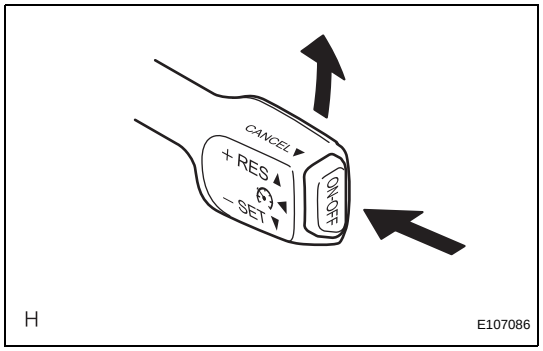

(e) Inspect the RES (RESUME) function.
  (1) Turn the cruise control main switch on.
  (2) Drive at the required speed between 40 km/h (25 mph) and 200 km/h (125 mph).
  (3) Push the cruise control main switch to - (COAST)/SET.
  (4) Cancel the cruise control system by performing any of the above operations (other than turning the main switch off).
  (5) After pushing the cruise control main switch to + (ACCEL)/RES (RESUME) at a driving speed of more than 40 km/h (25 mph), check that the vehicle resumes the speed set prior to the cancellation.

PROBLEM SYMPTOMS TABLE

HINT:
Be sure to perform the SYMPTOM SIMULATION procedure before replacing the ECM. If these symptoms do not persist, the cause of the problem may be poor intermittent electrical contact (open or short) of a wire harness or connector.

Cruise control system:

Symptom	Suspected area	See page
Vehicle speed cannot be set. (The CRUISE main indicator light comes on.)	1. Cruise control switch circuit	CC-28
	2. Combination meter	ME-15
	3. Vehicle speed sensor circuit	CC-19
	4. Stop light switch	CC-20
	5. Transmission range sensor circuit (U250E)	AX-39
	5. Park / Neutral position sensor circuit (U660E)	AX-158
	6. Clutch switch circuit	CC-25
	7. If the symptoms still occur after the above ares have been inspected and have proven to be normal, replace the ECM. (2AZ-FE)	ES-432
	7. If the symptoms still occur after the above ares have been inspected and have proven to be normal, replace the ECM. (2GR-FE)	ES-518
Pushing the ON-OFF button does not turn the cruise control system on. (Vehicle speed cannot be set.)	1. Stop light switch circuit	CC-20
	2. Clutch switch circuit (M/T)	CC-25
	3. Vehicle speed sensor circuit	CC-19
	4. Cruise control switch circuit	CC-28
	5. Transmission range sensor circuit (U250E)	AX-39
	5. Park / Neutral position sensor circuit (U660E)	AX-158
	6. If the symptoms still occur after the above areas have been inspected and have proven to be normal, replace the ECM. (2AZ- FE)	ES-432
	6. If the symptoms still occur after the above areas have been inspected and have proven to be normal, replace the ECM. (2GR-FE)	ES-518
The cruise control is canceled while it is operating.	1. Stop light switch circuit	CC-20
	2. Clutch switch circuit (M/T)	CC-25
	3. Transmission range sensor circuit (U250E)	AX-39
	3. Park / Neutral position sensor circuit (U660E)	AX-158
	4. Cruise control switch circuit	CC-28
	5. Vehicle speed sensor circuit	CC-19
	6. Combination meter	ME-15
	7. If the symptoms still occur after the above areas have been inspected and have proven to be normal, replace the ECM. (2AZ-FE)	ES-432
	7. If the symptoms still occur after the above areas have been inspected and have proven to be normal, replace the ECM. (2GR-FE)	ES-518
Pulling back on the control main switch does not cancel the cruise control. (The CRUISE main indicator light remains on.)	1. Cruise control switch circuit	CC-28
	2. If the symptoms still occur after the above area has been inspected and has proven to be normal, replace the ECM. (2AZ-FE)	ES-432
	2. If the symptoms still occur after the above area has been inspected and has proven to be normal, replace the ECM. (2GR-FE)	ES-518
Pulling back on the control main switch does not cancel the cruise control. (The CRUISE main indicator light goes off.)	Replace ECM (2AZ-FE)	ES-432
	Replace ECM (2GR-FE)	ES-518

Symptom	Suspected area	See page
The cruise control is not canceled when vehicle speed drops below the low speed limit. (The CRUISE main indicator light remains on.)	1. Vehicle speed sensor circuit	CC-19
	2. If the symptoms still occur after the above area has been inspected and has proven to be normal, replace the ECM. (2AZ-FE)	ES-432
	2. If the symptoms still occur after the above area has been inspected and has proven to be normal, replace the ECM. (2GR-FE)	ES-518
The cruise control is not canceled when vehicle speed drops below the low speed limit. (The CRUISE main indicator light goes off.)	Replace ECM (2AZ-FE)	CC-13
	Replace ECM (2GR-FE)	ES-518
Depressing the brake pedal does not cancel the cruise control. (The CRUISE main indicator light remains on.)	1. Stop light switch circuit	CC-20
	2. If the symptoms still occur after the above area has been inspected and has proven to be normal, replace the ECM. (2AZ-FE)	ES-432
	2. If the symptoms still occur after the above area has been inspected and has proven to be normal, replace the ECM. (2GR-FE)	ES-518
Depressing the brake pedal does not cancel the cruise control. (The CRUISE main indicator light goes off.)	Replace ECM (2AZ-FE)	ES-432
	Replace ECM (2GR-FE)	ES-518
Depressing the clutch pedal does not cancel the cruise control. (The CRUISE main indicator light remains on.)	1. Clutch switch circuit	CC-25
	2. If the symptoms still occur after the above area has been inspected and has proven to be normal, replace the ECM. (2AZ-FE)	ES-432
	2. If the symptoms still occur after the above area has been inspected and has proven to be normal, replace the ECM. (2GR-FE)	ES-518
Depressing the clutch pedal does not cancel the cruise control. (The CRUISE main indicator light goes off.)	Replace ECM (2AZ-FE)	ES-432
	Replace ECM (2GR-FE)	ES-518
Moving the shift liver does not cancel the cruise control.	1. Transmission range sensor circuit (U250E)	AX-39
	1. Park / Neutral position sensor circuit (U660E)	AX-158
	2. If the symptoms still occur after the above area has been inspected and has proven to be normal, replace the ECM. (2AZ-FE)	ES-432
	2. If the symptoms still occur after the above area has been inspected and has proven to be normal, replace the ECM. (2GR-FE)	ES-518
Hunting (Speed is not constant.)	1. Vehicle speed sensor circuit	CC-19
	2. Combination meter	ME-15
	3. If the symptoms still occur after the above ares have been inspected and have proven to be normal, replace the ECM. (2AZ-FE)	ES-432
	3. If the symptoms still occur after the above ares have been inspected and have proven to be normal replace the ECM. (2GR-FE)	ES-518
The CRUISE main indicator light remains blinking.	1. TC and CG terminal circuit	CC-35
	2. If the symptoms still occur after the above area has been inspected and has proven to be normal, replace the ECM.	CC-13

TERMINALS OF ECM

1. CHECK ECM

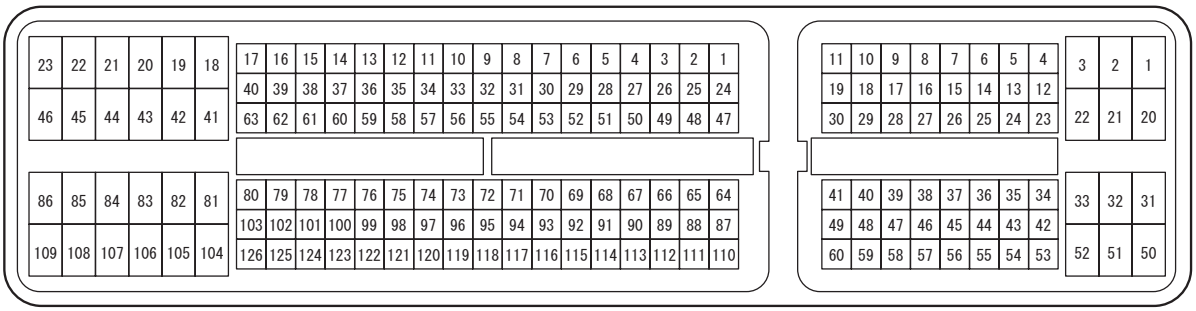

Symbols (Terminal No.)	Wiring Color	Terminal Description	Condition	Specified Condition
A55-27 (TC) - C55-81 (E1)*1 A24-27 (TC) - C24-104 (E1)*2	P - W-B	Ground	Ignition switch on (IG)	10 to 14 V
A55-27 (TC) - C55-81 (E1)*1 A24-27 (TC) - C24-104 (E1)*2	P - W-B	Ground	Connect terminals TC and CG of DLC3	Below 1 V
A55-36 (STP) - C55-81 (E1)*1 A24-36 (STP) - C24-104 (E1)*2	W - W-B	Stop light signal	Ignition switch on (IG), Depress brake pedal	10 to 14 V
A55-36 (STP) - C55-81 (E1)*1 A24-36 (STP) - C24-104 (E1)*2	W - W-B	Stop light signal	Ignition switch on (IG), Release brake pedal	Below 1 V
A55-40 (CCS) - C55-81 (E1)*1 A24-40 (CCS) - C24-104 (E1)*2	W - W-B	Cruise control main switch circuit	Ignition switch on (IG)	10 to 14 V
A55-40 (CCS) - C55-81 (E1)*1 A24-40 (CCS) - C24-104 (E1)*2	W - W-B	Cruise control main switch circuit	CANCEL switch ON	6.6 to 10.1 V
A55-40 (CCS) - C55-81 (E1)*1 A24-40 (CCS) - C24-104 (E1)*2	W - W-B	Cruise control main switch circuit	SET/COAST switch ON	4.5 to 7.1 V
A55-40 (CCS) - C55-81 (E1)*1 A24-40 (CCS) - C24-104 (E1)*2	W - W-B	Cruise control main switch circuit	RES/ACC switch ON	2.3 to 4.0 V
A55-40 (CCS) - C55-81 (E1)*1 A24-40 (CCS) - C24-104 (E1)*2	W - W-B	Cruise control main switch circuit	MAIN switch ON	Below 1 V
A55-35 (ST1-) - C55-81 (E1)*1 A24-35 (ST1-) - C24-104 (E1)*2	GR - W-B	Stop light signal	Ignition switch on (IG), Depress brake pedal	Below 1 V
A55-35 (ST1-) - C55-81 (E1)*1 A24-35 (ST1-) - C24-104 (E1)*2	GR - W-B	Stop light signal	Ignition switch on (IG), Release brake pedal	10 to 14 V
C24-56 (D) - C55-81 (E1)*1 C24-56 (D) - C24-104 (E1)*2	C - W-B	Clutch signal	Ignition switch on (IG), Depress clutch pedal	Below 1 V
C24-56 (D) - C55-81 (E1)*1 C24-56 (D) - C24-104 (E1)*2	C - W-B	Clutch signal	Ignition switch on (IG), Release brake pedal	10 to 14 V

HINT:
*1: 2GR-FE
*2: 2AZ-FE

DIAGNOSIS SYSTEM

1. DESCRIPTION

The ECU controls the cruise control system of the vehicle. The data and DTCs relating to the cruise control system can be read from the DLC3 of the vehicle. If either DTC or CRUISE OK is not displayed on the multi-information display on the combination meter when checking for DTCs, there may be a problem with either the combination meter or the CAN communication and multiplex communication systems. Use the intelligent tester to check and solve the problem.

2. CHECK DLC3

(a) The ECU uses the ISO 15765-4 for communication protocol. The terminal arrangement of the DLC3 complies with SAE J1962 and matches the ISO 15765-4 format.

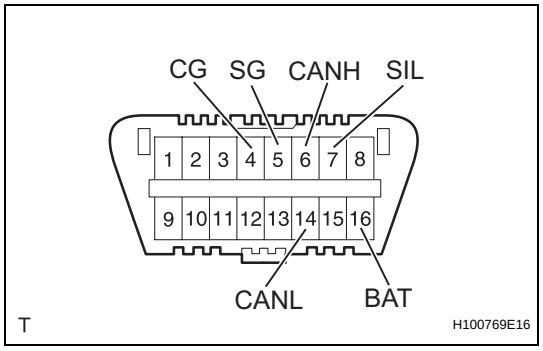

Terminal No. (Symbols)	Terminal Description	Condition	Specified Condition
SIL (7) - SG (5)	Bus "+" line	During transmission	Pulse generation
CG (4) - Body ground	Chassis ground	Always	Below 1 Ω
SG (5) - Body ground	Signal ground	Always	Below 1 Ω
BAT (16) - Body ground	Battery positive	Always	10 to 14 V
CANH (6) - CANL (14)	CAN bus line	Ignition switch off*	54 to 69 Ω
CANH (6) - CG (4)	HIGH-level CAN bus line	Ignition switch off*	200 Ω or higher
CANL (14) - CG (4)	LOW-level CAN bus line	Ignition switch off*	200 Ω or higher
CANH (6) - BAT (16)	HIGH-level CAN bus line	Ignition switch off*	6 kΩ or higher
CANL (14) - BAT (16)	LOW-level CAN bus line	Ignition switch off*	6 kΩ or higher

NOTICE:

***: Before measuring the resistance, leave the vehicle as is for at least 1 minute and do not operate the ignition switch, any other switches or the doors.**

If the result is not as specified, the DLC3 may have a malfunction. Repair or replace the harness and connector.

(b) Connect the cable of the intelligent tester to the DLC3, turn the ignition switch on (IG), and attempt to use the tester. If the display indicates that a communication error has occurred, there is a problem with either the vehicle or the tester.

- If communication is normal when the tester is connected to another vehicle, inspect the DLC3 of the original vehicle.

- If communication is still not possible when the tester is connected to another vehicle, the problem may be in the tester itself. Consult the Service Department listed in the tester's instruction manual.

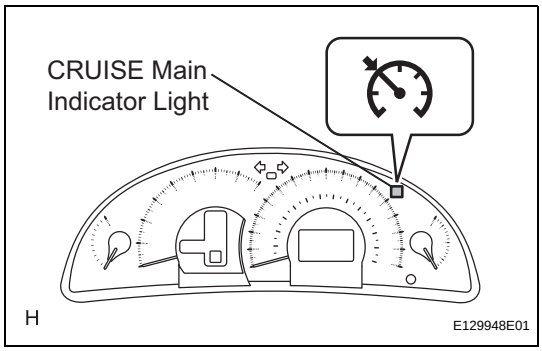

3. CHECK INDICATOR

(a) Turn the ignition switch on (IG).

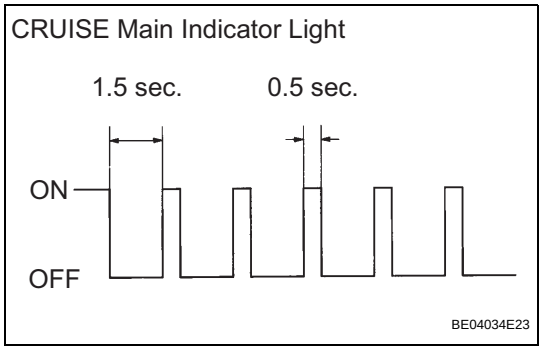

(b) Check that the CRUISE main indicator light illuminates when the cruise control main switch is turned on, and that the indicator light turns off when the main switch is turned off. If the results are not as specified, inspect the CRUISE main indicator light circuit (See page CC-34).
HINT:
While driving with cruise control, the ECM activates AUTO CANCEL of the cruise control system when a malfunction occurs in one of the following: vehicle speed sensors, stop light switch, or other related parts. When AUTO CANCEL is activated, the CRUISE main indicator light outputs the blinking pattern shown to the left. At the same time, data of the malfunction is stored as a DTC.

DTC CHECK / CLEAR

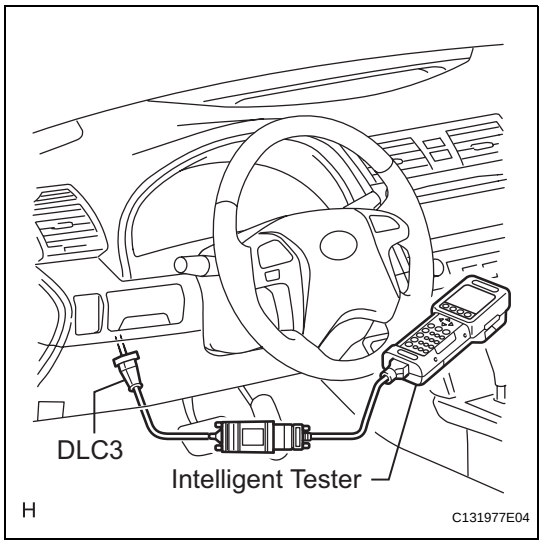

1. DTC CHECK

(a) Connect the intelligent tester to the DLC3.
  (1) Connect the intelligent tester to the Controller Area Network Vehicle Interface Module (CAN VIM). Then connect the CAN VIM to the Data Link Connector 3 (DLC3).
(b) Turn the ignition switch on (IG).
(c) Read the DTCs by following the prompts on the tester screen.
HINT:
Refer to the intelligent tester operator's manual for further details.

2. DTC CLEAR

(a) Connect the intelligent tester to the DLC3.
(b) Turn the ignition switch on (IG).
(c) Operate the intelligent tester to erase the codes.
HINT:
Refer to the intelligent tester operator's manual for further details.

FAIL-SAFE CHART

HINT:
If the following conditions are detected while the cruise control is in operation, the system clears the stored vehicle speed in the ECM and cancels the cruise control operation.

Vehicle Condition	Auto Cancel Condition	Re-operation Condition
CRUISE main indicator light blinks	• There is open or short in stop light switch circuit • There is problem with vehicle speed signal • There is problem with throttle position sensor and motor	Turn cruise control main switch on again
CRUISE main indicator light blinks	• There is problem with input circuit of stop light switch circuit • There is problem with cancel circuit	• Turn cruise control main switch on again • Turn ignition switch off then on again
CRUISE main indicator light remains on (Cruise control is canceled)	• Vehicle speed is lower than low speed limit (approx. 40 km/h (25 mph)) while running with cruise control on	Push cruise control main switch to + (ACCEL)/RES (RESUME)
	• Vehicle speed is lower than stored speed by approx. 16 km/h (9.9 mph) or more	Push cruise control main switch to - (COAST)/ SET

DATA LIST / ACTIVE TEST

1. READ DATA LIST

HINT:
Using the intelligent tester's DATA LIST allows switch, sensor, actuator, and other item values to be read without removing any parts. Reading the DATA LIST early in troubleshooting is one way to save time.

(a) Connect the intelligent tester to the DLC3.
(b) Turn the ignition switch on (IG).
(c) Read the DATA LIST according to the display on the tester.

ECM (Cruise control):

Item	Measurement Item / Display (Range)	Normal Condition	Diagnostic Note
VEHICLE SPD	Vehicle speed / min.: 0 km/h (0 mph), max.: 255 km/h (158 mph)	Actual vehicle speed	-
MEMORY SPD	Cruise control memorized speed / min.: 36 km/h (22.5 mph), max.: 200 km/h (125 mph)	Actual stored vehicle speed	-
THROTTLE	Throttle opening angle / min.: 0°, max.: 125°	Actual demanded throttle angle	-
SHIFT D POS	Shift D position / ON or OFF	ON: Shift lever in D or 4 OFF: Shift lever is except D or 4 position	-
CRUISE CONTROL	Cruise control system active condition / ON or OFF	ON: Cruise control activated OFF: Cruise control deactivated	-
CCS INDICATOR M	Cruise indicator signal (Main CPU) / ON or OFF	ON: "CRUISE" on OFF: "CRUISE" off	-
MAIN SW (MAIN)	Main switch signal (Main CPU) / ON or OFF	ON: Cruise control main switch on OFF: Cruise control main switch off	"1"
MAIN SW (SUB)	Main switch signal (Main CPU) / ON or OFF	ON: Cruise control main switch on OFF: Cruise control main switch off	-
SHIFT D POS	Clutch pedal / ON or OFF	ON: Clutch pedal released OFF: Clutch pedal depressed	-
CANCEL SW	CANCEL switch signal / ON or OFF	ON: CANCEL switch on OFF: CANCEL switch off	-
SET/COAST SW	SET / COAST switch signal / ON or OFF	ON: - (COAST) / SET switch on OFF: - (COAST) / SET switch off	-
RES/ACC SW	RES / ACC switch signal / ON or OFF	ON: + (ACCEL) / RES (RESUME) switch on OFF: + (ACCEL) / RES (RESUME) switch off	-
STP LIGHT SW M (STP)	Stop light switch signal (Main CPU) / ON or OFF	ON: Brake pedal depressed OFF: Brake pedal released	-
STP LIGHT SW S2 (STP)	Stop light switch signal (Sub CPU) / ON or OFF	ON: Brake pedal depressed OFF: Brake pedal released	-
STP LIGHT SW S1 (ST1-)	Stop light switch signal (Sub CPU)	ON: Brake pedal depressed OFF: Brake pedal released	-

HINT:
- "1" is OK but CRUISE main indicator light does not illuminate → CRUISE main indicator light, wire harness, or ECM failure

2. PERFORM ACTIVE TEST

HINT:
Performing the intelligent tester's ACTIVE TEST allows relays, VSVs, actuators, and other items to be operated without removing any parts. Performing the ACTIVE TEST early in troubleshooting is one way to save time. The DATA LIST can be displayed during the ACTIVE TEST.

(a) Connect the intelligent tester to the DLC3.
(b) Turn the ignition switch on (IG).
(c) Perform the ACTIVE TEST according to the display on the tester.
HINT:
The ignition switch must be turned on (IG) to proceed to with the ACTIVE TEST using the intelligent tester.

Combination meter:

Item	Vehicle Condition / Test Details	Diagnostic Note
CRUISE INDIC	Turns CRUISE main indicator light ON / OFF	-

DIAGNOSTIC TROUBLE CODE CHART

If a trouble code is displayed during the DTC check, check the trouble areas listed for that code in the table below and proceed to the appropriate page.

Cruise control system:

DTC No.	Detection Item	Trouble Area	See page
P0500	Vehicle Speed Sensor Malfunction	1. Vehicle speed sensor 2. Vehicle speed sensor signal circuit 3. ECM	CC-19
P0503	Vehicle Speed Sensor "A" Intermittent / Erratic / High	1. Vehicle speed sensor 2. Vehicle speed sensor signal circuit 3. ECM	CC-19
P0571	Brake Switch "A" Circuit	1. Stop light switch 2. Stop light switch circuit 3. ECM	CC-20
P0607	Control Module Performance	ECM	CC-24

DTC	P0500	Vehicle Speed Sensor Malfunction

DTC	P0503	Vehicle Speed Sensor "A" Intermittent / Erratic / High

DESCRIPTION

Refer to DTC P0500 (See page ES-229).

DTC No.	DTC Detection Condition	Trouble Area
P0500	The vehicle speed signal from the vehicle speed sensor is cut for 0.14 sec. or more while cruise control is in operation.	• Vehicle speed sensor • Vehicle speed sensor signal circuit • ECM
P0503	Momentary interruption and noise are detected when a rapid change of vehicle speed occurs while cruise control is in operation.	• Vehicle speed sensor • Vehicle speed sensor signal circuit • ECM

WIRING DIAGRAM

Refer to DTC P0500 (See page ES-231).

INSPECTION PROCEDURE

Refer to DTC P0500 (See page ES-231).

DTC	P0571	Brake Switch "A" Circuit

DESCRIPTION

When the brake pedal is depressed, the stop light switch sends a signal to the ECM. When the ECM receives this signal, it cancels the cruise control. The fail-safe function operates to enable normal driving even if there is a malfunction in the stop light signal circuit. The cancellation condition occurs when voltage is applied to terminal STP. When the brake is applied, voltage is normally applied to terminal STP of the ECM through the STOP SW fuse and the stop light switch, and the ECM turns the cruise control off.

DTC No.	DTC Detection Condition	Trouble Area
P0571	When voltage of STP terminal and that of ST1- terminal of ECM are less than 1 V for 0.5 sec. or more	• Stop light switch • Stop light switch circuit • ECM

WIRING DIAGRAM

Without Smart Key System:

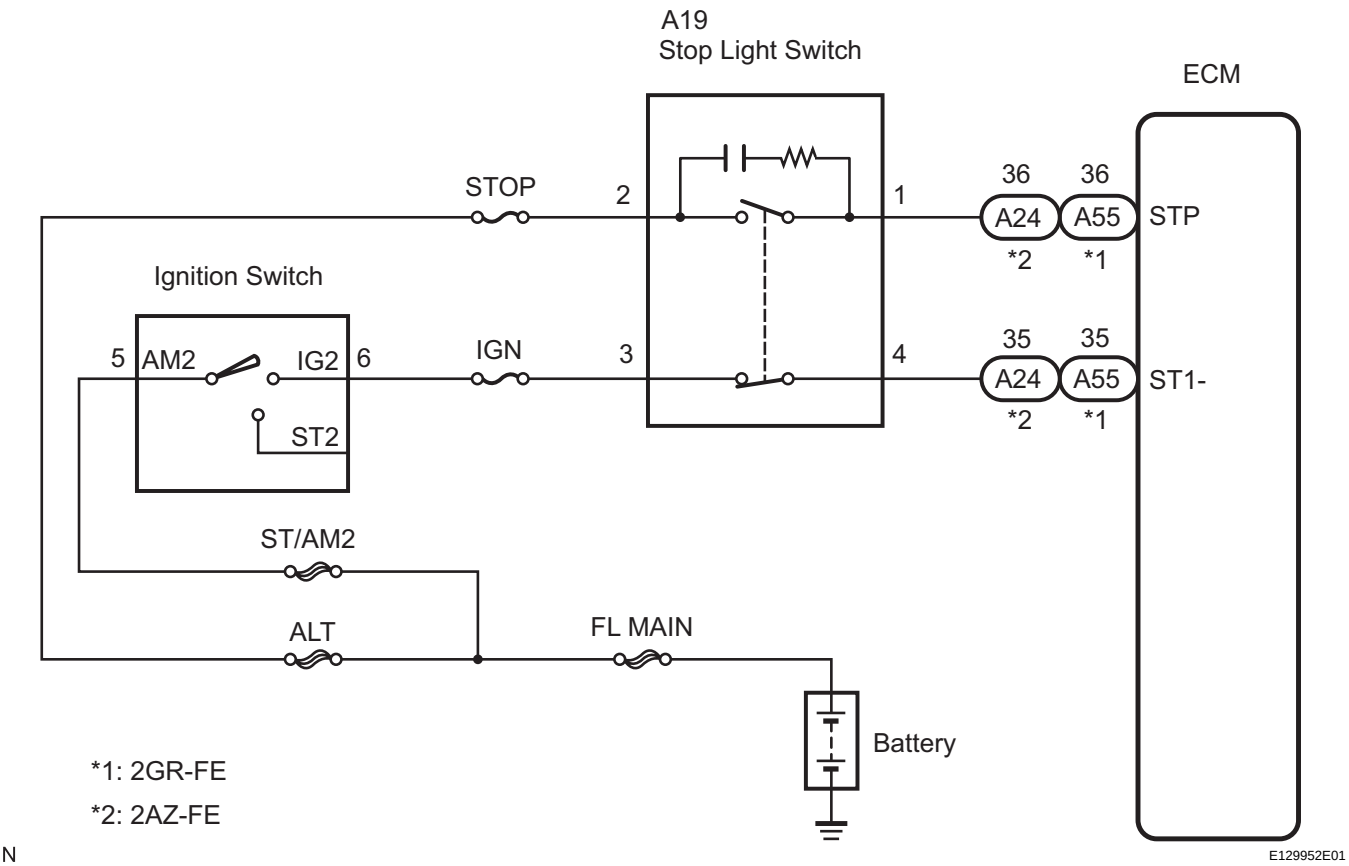

CC

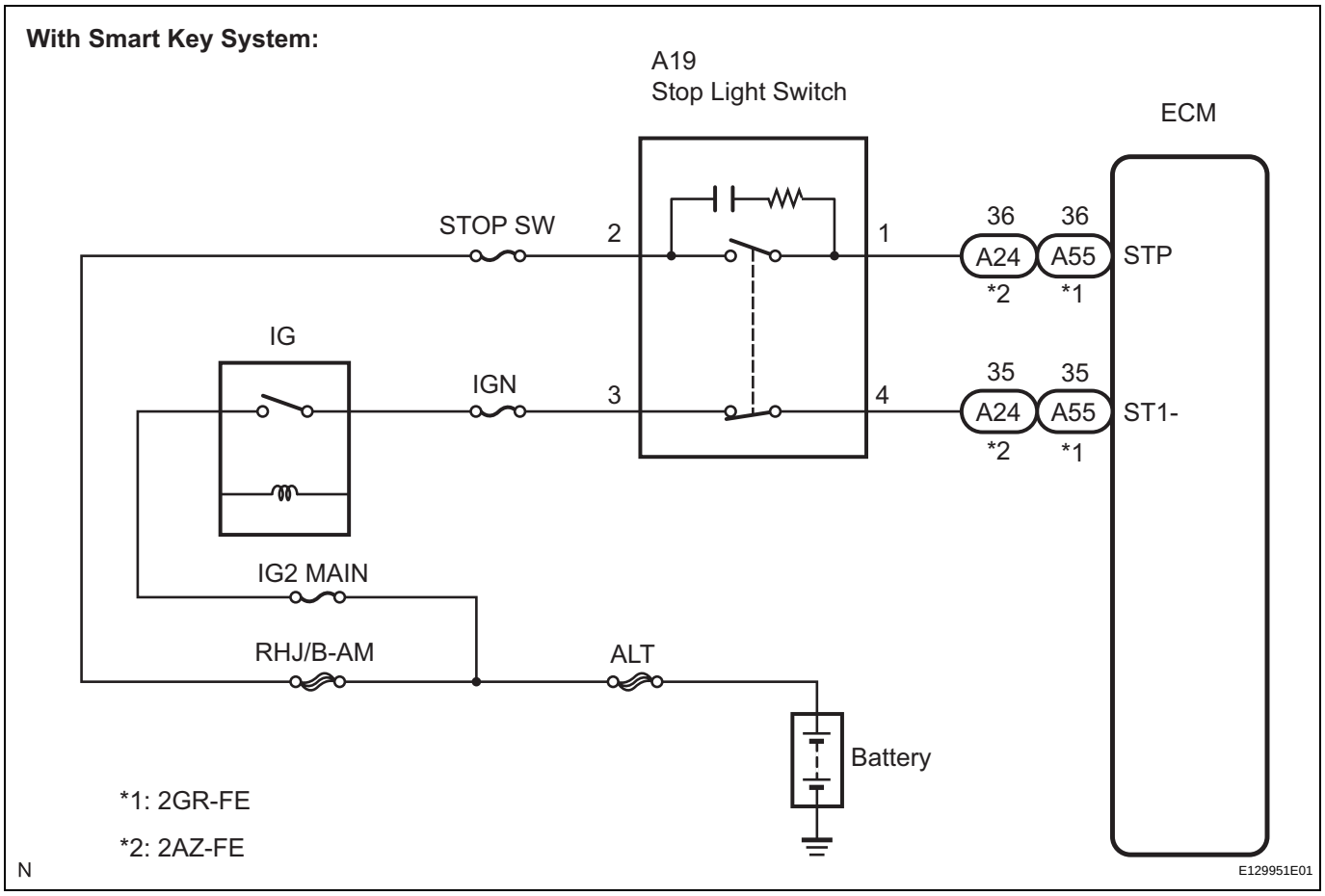

INSPECTION PROCEDURE

1	READ VALUE ON INTELLIGENT TESTER

(a) Connect the intelligent tester to the DLC3.
(b) Turn the ignition switch on (IG), and turn the intelligent tester main switch on.
(c) Check the DATA LIST for proper functioning of the stop light switch.

ECM (Cruise control):

Item	Measurement Item / Display (Range)	Normal Condition	Diagnostic Note
STP LIGHT SW M (STP)	Stop light switch signal (Main CPU) / ON or OFF	ON: Brake pedal depressed OFF: Brake pedal released	-
STP LIGHT SW S2 (STP)	Stop light switch signal (Sub CPU) / ON or OFF	ON: Brake pedal depressed OFF: Brake pedal released	-
STP LIGHT SW S1 (ST1-)	Stop light switch signal (Sub CPU) / ON or OFF	ON: Brake pedal depressed OFF: Brake pedal released	-

OK:
When the brake pedal is operated, the display changes as shown above.

OK → **REPLACE ECM**

NG

CC

2 CHECK HARNESS AND CONNECTOR (STOP LIGHT SWITCH - BATTERY)

Stop Light Switch Wire Harness Side Connector Front View:

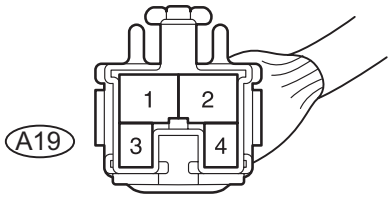

N E114084E08

(a) Disconnect the A19 connector from the stop light switch.
(b) Measure the voltage according to the value(s) in the table below.

Standard voltage

Tester Connection	Condition	Specified Condition
A19-2 - Body ground	Always	10 to 14 V
A19-3 - Body ground	Ignition switch on (IG)	10 to 14 V

NG → **REPAIR OR REPLACE HARNESS OR CONNECTOR**

OK

3 INSPECT STOP LIGHT SWITCH

Stop Light Switch:

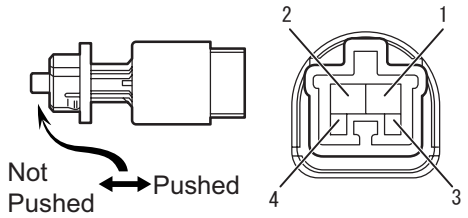

H E128781E02

(a) Remove the stop light switch. (See page CC-42)
(b) Measure the resistance according to the value(s) in the table below.

Standard resistance

Tester Connection	Switch Condition	Specified Condition
1 - 2	Switch pin not pushed	Below 1 Ω
3 - 4	Switch pin not pushed	10 kΩ or higher
1 - 2	Switch pin pushed	10 kΩ or higher
3 - 4	Switch pin pushed	Below 1 Ω

(c) Install the stop light switch.

NG → **REPLACE STOP LIGHT SWITCH**

OK

4	**CHECK ECM**

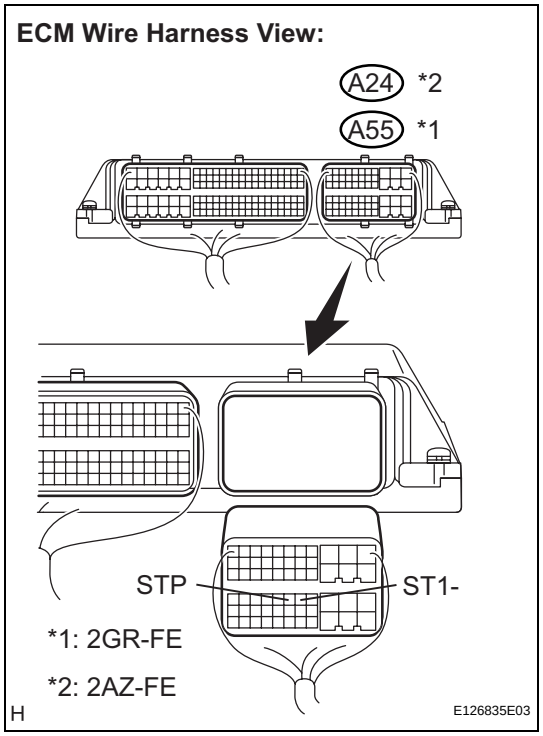

(a) Reconnect the stop light switch connector.
(b) Disconnect the A55 connector from the ECM. (2GR-FE)
(c) Disconnect the A24 connector from the ECM. (2AZ-FE)
(d) Turn the ignition switch on (IG).
(e) Measure the voltage according to the value(s) in the table below.

Standard voltage

Tester Connection	Brake Pedal Condition	Specified Condition
A55-36 (STP) - Body ground*1 A24-36 (STP) - Body ground*2	Depressed	10 to 14 V
A55-36 (STP) - Body ground*1 A24-36 (STP) - Body ground*2	Released	Below 1 V
A55-35 (ST1-) - Body ground*1 A24-35 (ST1-) - Body ground*2	Depressed	Below 1 V
A55-35 (ST1-) - Body ground*1 A24-35 (ST1-) - Body ground*2	Released	10 to 14 V

HINT:
*1: 2GR-FE
*2: 2AZ-FE

NG → **REPAIR OR REPLACE HARNESS OR CONNECTOR (STOP LIGHT SWITCH - ECM)**

OK

REPLACE ECM

CC

DTC	P0607	Control Module Performance

DESCRIPTION

This DTC indicates the internal abnormalities of the ECM.

DTC No.	DTC Detection Condition	Trouble Area
P0607	When both of the following conditions are met: • STP signals input to the ECM supervisory CPU and control ECU are different for 0.15 sec. or more • 0.4 sec. have passed after cruise cancel input signal (STP input) is input to the ECM	ECM

HINT:
The ECM receives signals from each sensor to control all functions of the cruise control system. When a trouble code is detected, the fail-safe function remains on until the ignition switch is turned off.

INSPECTION PROCEDURE

1	REPLACE ECM

NEXT

END

Clutch Switch Circuit

DESCRIPTION

Clutch switch circuit inspection is necessary for M/T vehicles.
When the clutch pedal is released, the ECM receives positive (+) battery voltage through the ECU IG fuse. While depressing the clutch pedal, the clutch switch sends a signal to terminal D of the ECM. The ECM cancels cruise control drive when terminal D receives the signal.

WIRING DIAGRAM

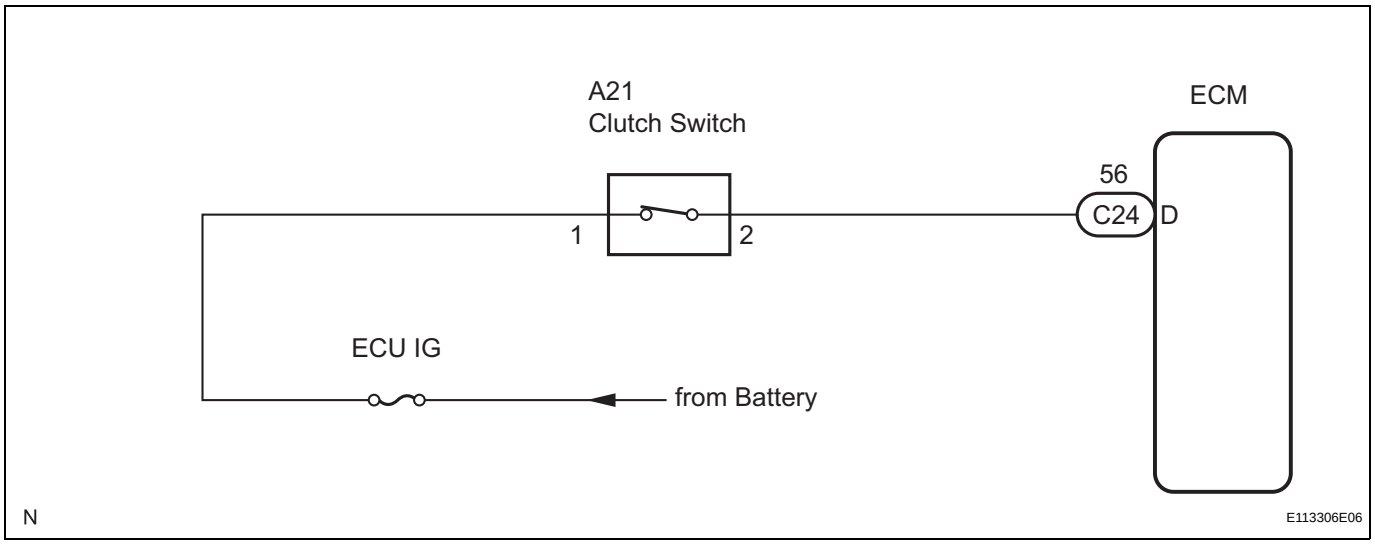

INSPECTION PROCEDURE

1	INSPECT ECM

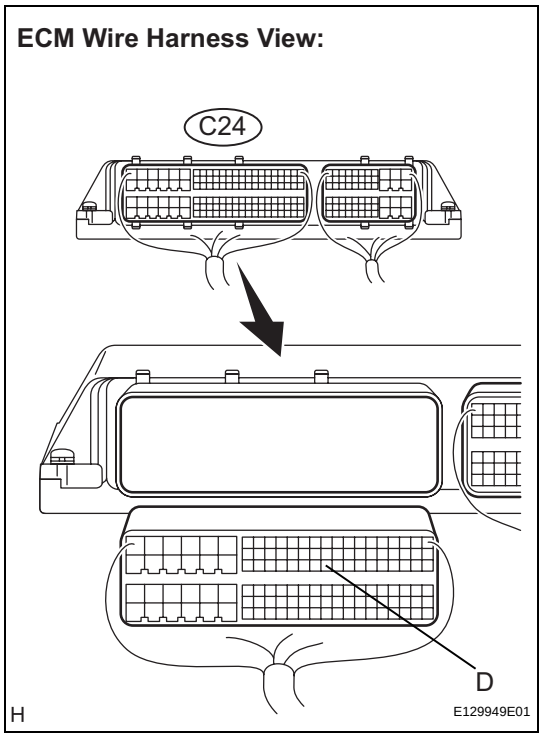

(a) Disconnect the C24 connector from the ECM.
(b) Turn the ignition switch on (IG).
(c) Measure the voltage according to the value(s) in the table below.

Standard voltage

Tester Connection	Condition	Specified Condition
C24-56 (D) - Body ground	Clutch pedal depressed	Below 1 V
	Clutch pedal released	10 to 14 V

OK → **PROCEED TO NEXT CIRCUIT INSPECTION SHOWN IN PROBLEM SYMPTOMS TABLE**

CC

NG

2 INSPECT CLUTCH SWITCH

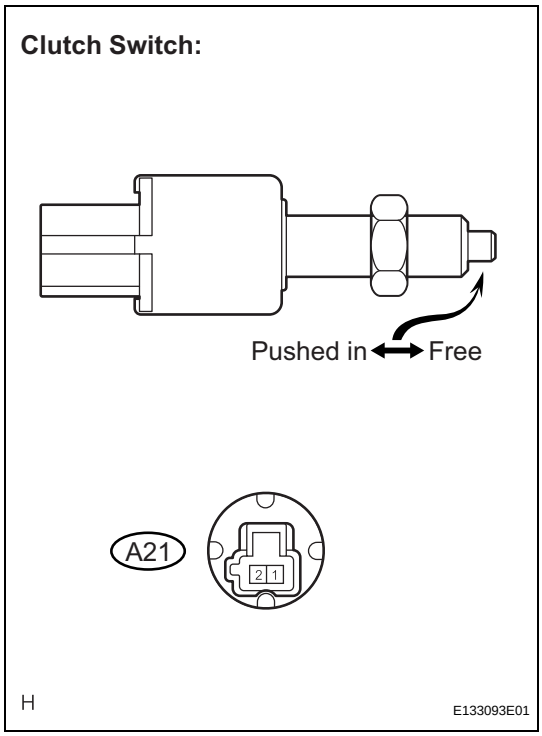

(a) Turn the ignition switch off.
(b) Disconnect the A21 connector from the clutch switch.
(c) Remove the clutch switch. (See page CC-42)
(d) Measure the resistance according to the value(s) in the table below.

Standard resistance

Tester Connection	Condition	Specified Condition
1 - 2	Switch pin free (Clutch pedal depressed)	10 kΩ or higher
	Switch pin pushed in (Clutch pedal released)	Below 1Ω

NG → **REPLACE CLUTCH SWITCH**

OK

CC

3	CHECK HARNESS AND CONNECTOR

ECM Wire Harness View:

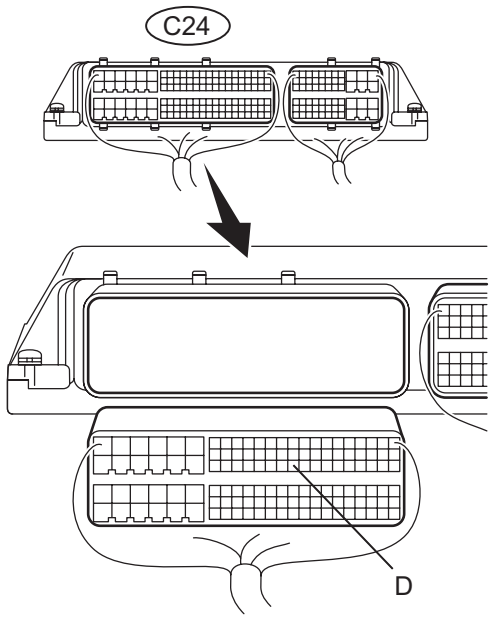

Clutch Switch (Wire Harness Side) Connector Front View:

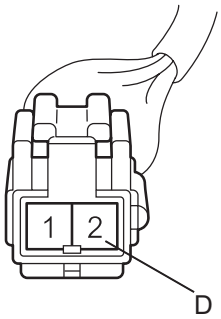

H E129955E01

(a) Measure the resistance according to the value(s) in the table below.

Standard resistance

Tester Connection	Condition	Specified Condition
C24-56 (D) - A21-2	Always	Below 1 Ω
C24-56 (D) - Body ground	Always	10 kΩ or higher

NG → **REPAIR OR REPLACE HARNESS OR CONNECTOR (ECM - CLUTCH SWITCH)**

OK

REPAIR OR REPLACE HARNESS OR CONNECTOR (BATTERY - CLUTCH SWITCH)

Cruise Control Switch Circuit

DESCRIPTION

The cruise control main switch operates 7 functions: SET, - (COAST), TAP-DOWN, RES (RESUME), + (ACCEL), TAP-UP, and CANCEL. The SET, TAP-DOWN, and - (COAST) functions, and the RES (RESUME), TAP-UP, and + (ACCEL) functions are operated with the same switch. The cruise control main switch is an automatic return type switch which turns on only while operating it in the direction of each arrow and turns off after releasing it. The internal contact point of the cruise control main switch is turned on with the switch operation. Then the ECM reads the voltage value that has been changed by the switch operation to control SET, - (COAST), RES (RESUME), + (ACCEL), and CANCEL.

WIRING DIAGRAM

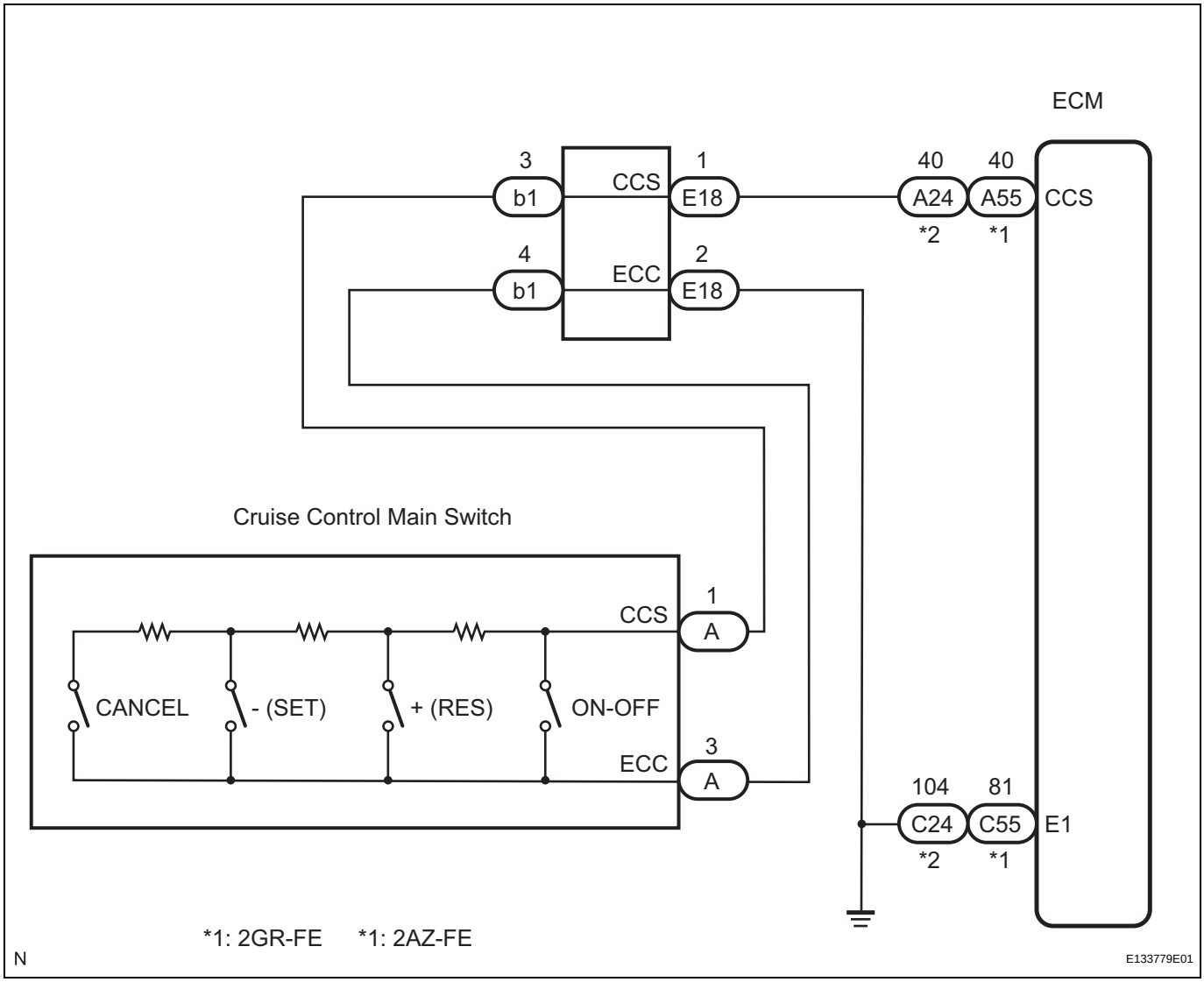

CC

INSPECTION PROCEDURE

1 READ VALUE ON INTELLIGENT TESTER

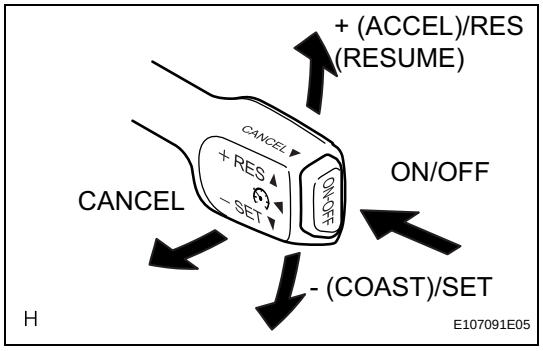

(a) Connect the intelligent tester to the DLC3.
(b) Turn the ignition switch on (IG) and turn the intelligent tester main switch on.
(c) Check the DATA LIST for proper functioning of the cruise control main switch.

ECM (Cruise control):

Item	Measurement Item/Display (Range)	Normal Condition	Diagnostic Note
MAIN SW (MAIN)	Main switch signal (Main CPU)/ ON or OFF	ON: Cruise control main switch on OFF: Cruise control main switch off	-
CANCEL SW	CANCEL switch signal/ON or OFF	ON: CANCEL switch on OFF: CANCEL switch off	-
SET / COAST SW	SET / COAST switch signal/ON or OFF	ON: - (COAST)/SET switch on OFF: - (COAST)/SET switch off	-
RES / ACC SW	RES / ACC switch signal/ON or OFF	ON: + (ACCEL)/RES (RESUME) switch on OFF: + (ACCEL)/RES (RESUME) switch off	-
MAIN SW (SUB)	Main switch signal (Sub CPU) / ON or OFF	ON: Cruise control main switch ON OFF: Cruise control main switch OFF	-

OK:
When the cruise control main switch is operated, the display changes as shown above.

Result

Result	Proceed to
OK	**A**
NG (All items are defective)	**B**
NG (1 to 4 items are defective)	**C**

A → **PROCEED TO NEXT CIRCUIT INSPECTION SHOWN IN PROBLEM SYMPTOMS TABLE**

C → **REPLACE CRUISE CONTROL MAIN SWITCH**

B

2 INSPECT CRUISE CONTROL MAIN SWITCH

(a) Remove the cruise control main switch (See page CC-38).

CC

(b) Measure the resistance according to the value(s) in the table below.

Cruise Control Main Switch:

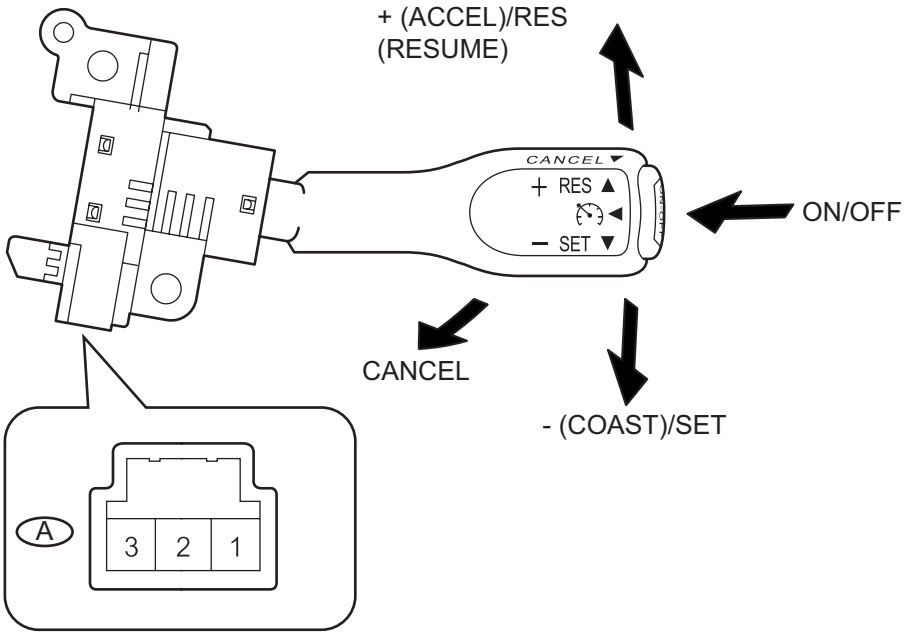

H

E106137E06

Standard resistance

Tester Connection	Switch Condition	Specified Condition
A-1 (CCS) - A-3 (ECC)	Neutral	10 kΩ or higher
A-1 (CCS) - A-3 (ECC)	+ (ACCEL)/RES (RESUME)	216 to 264 Ω
A-1 (CCS) - A-3 (ECC)	- (COAST)/SET	567 to 693 Ω
A-1 (CCS) - A-3 (ECC)	CANCEL	1,386 to 1,694 Ω
A-1 (CCS) - A-3 (ECC)	Main Switch off	10 kΩ or higher
A-1 (CCS) - A-3 (ECC)	Main Switch on	Below 1 Ω

NG → **REPLACE CRUISE CONTROL MAIN SWITCH**

CC

OK

3	**CHECK HARNESS AND CONNECTOR (CRUISE CONTROL MAIN SWITCH - SPIRAL CABLE)**

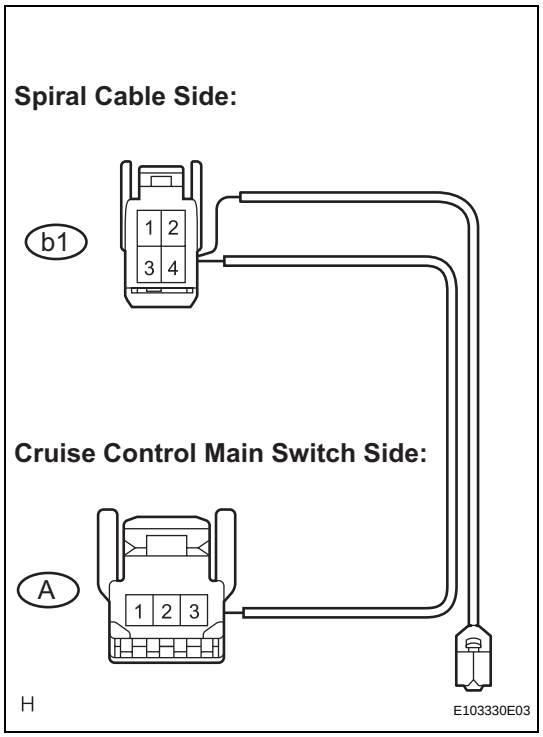

(a) Disconnect the b1 connector from the spiral cable.
(b) Measure the resistance according to the value(s) in the table below.

Standard resistance

Tester connection	Specified condition
A-1 - b1-3	Below 1 Ω
A-3 - b1-4	Below 1 Ω

NG → **REPAIR OR REPLACE HARNESS OR CONNECTOR**

OK

CC

4	CHECK SPIRAL CABLE

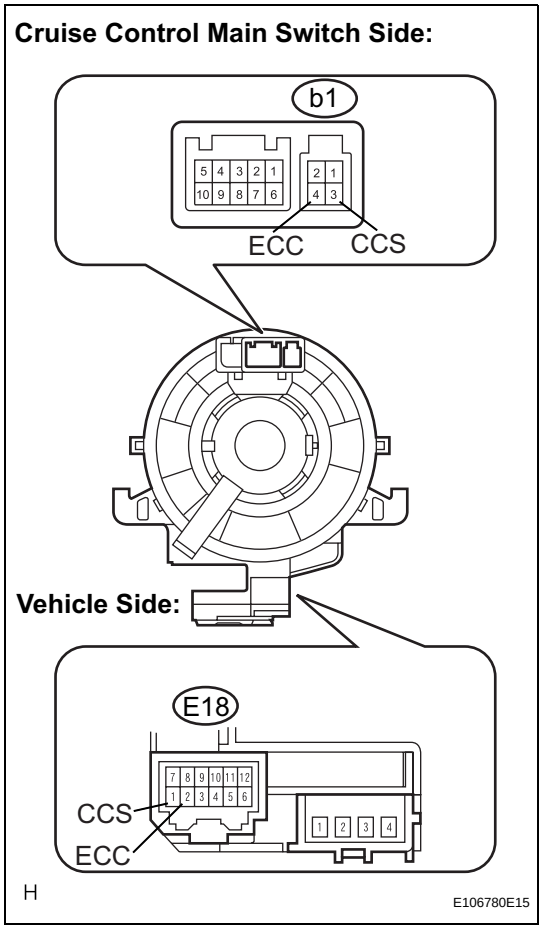

NOTICE:
The spiral cable is an important part of the SRS airbag system. Incorrect removal or installation of the spiral cable may prevent the airbag from deploying. Be sure to read the page shown in the brackets.

HINT:
- Removal (See page RS-363)
- Installation (See page RS-366)

(a) Remove the spiral cable.
(b) Measure the resistance according to the value(s) in the table below.

Standard resistance

Tester Connection	Spiral Cable Position	Specified Condition
b1-3 - E18-1 (CCS)	Center	Below 1 Ω
	2.5 rotations to the left	
	2.5 rotations to the right	
b1-4 - E18-2 (ECC)	Center	Below 1 Ω
	2.5 rotations to the left	
	2.5 rotations to the right	

HINT:
The spiral cable makes a maximum of approximately 5 rotations.

NG → **REPLACE SPIRAL CABLE**

OK

CC

5 CHECK WIRE HARNESS (SPIRAL CABLE - ECM AND BODY GROUND)

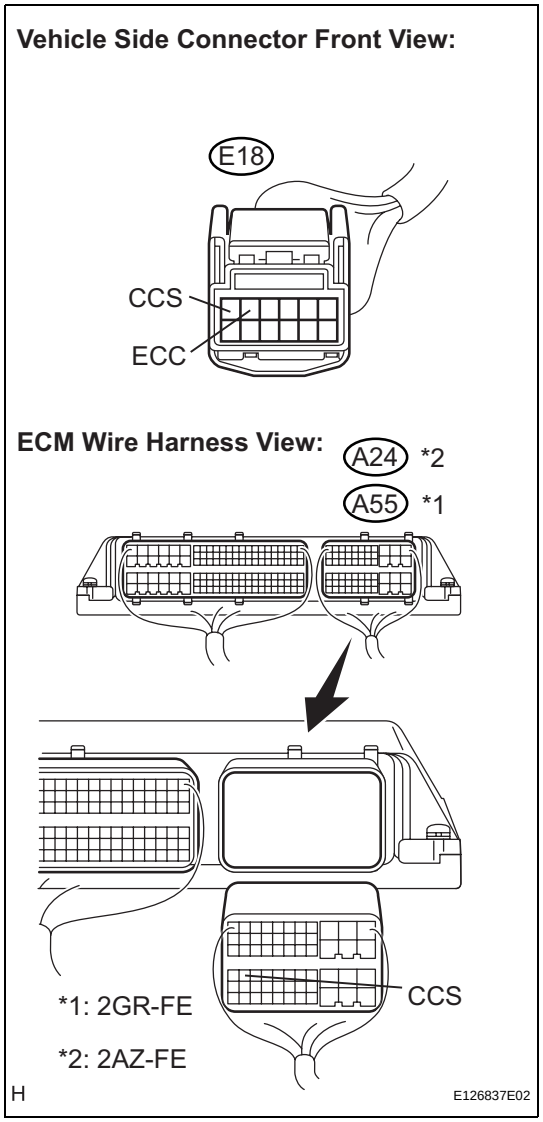

(a) Measure the resistance according to the value(s) in the table below.

Standard resistance

Tester Connection	Condition	Specified Condition
E18-1 - A55-40 (CCS)*1 E18-1 - A24-40 (CCS)*2	Always	Below 1 Ω
A55-40 (CCS) - Body ground*1 A24-40 (CCS) - Body ground*2	Always	10 kΩ or higher
E18-2 (ECC) - Body ground	Always	Below 1 Ω

HINT:
*1: 2GR-FE
*2: 2AZ-FE

NG → **REPAIR OR REPLACE HARNESS OR CONNECTOR**

OK

REPLACE ECM

CC

Cruise Main Indicator Light Circuit

DESCRIPTION

- The ECM detects a cruise control switch signal and sends it to the combination meter through CAN. Then the CRUISE main indicator light comes on.
- The CRUISE main indicator light circuit uses CAN for communication. If there is a malfunction in this circuit, check for DTCs in the CAN communication system before troubleshooting this circuit.

INSPECTION PROCEDURE

1 PERFORM ACTIVE TEST USING INTELLIGENT TESTER

(a) Connect the intelligent tester to the DLC3.
(b) Check the CRUISE main indicator light by performing the ACTIVE TEST.

Combination meter:

Item	Test Details	Diagnostic Note
CRUISE INDIC	Turns CRUISE main indicator light ON / OFF	-

OK:
Indicator light comes on / goes off.

NG → **REPLACE COMBINATION METER ASSEMBLY**

OK

2 READ VALUE ON INTELLIGENT TESTER

(a) Connect the intelligent tester to the DLC3.
(b) Turn the ignition switch on (IG) and turn the intelligent tester main switch on.
(c) Check the DATA LIST for proper functioning of the CRUISE main indicator light.

CC

ECM (Cruise control):

Item	Measurement Item / Display (Range)	Normal Condition	Diagnostic Note
CCS INDICATOR M	Cruise indicator signal (Main CPU) / ON or OFF	ON: "CRUISE" on OFF: "CRUISE" off	-

OK:
When the cruise control main switch is operated, the display changes as shown above.

NG → **REPLACE ECM**

OK

PROCEED TO NEXT CIRCUIT INSPECTION SHOWN IN PROBLEM SYMPTOMS TABLE

TC and CG Terminal Circuit

DESCRIPTION

Connecting terminals TC and CG of the DLC3 causes the system to enter self-diagnostic mode. If a malfunction is present, DTCs will be output.
HINT:
When a particular warning light remains blinking, a ground short in the wiring of terminal TC of the DLC3 or an internal ground short in the relevant ECU is suspected.

WIRING DIAGRAM

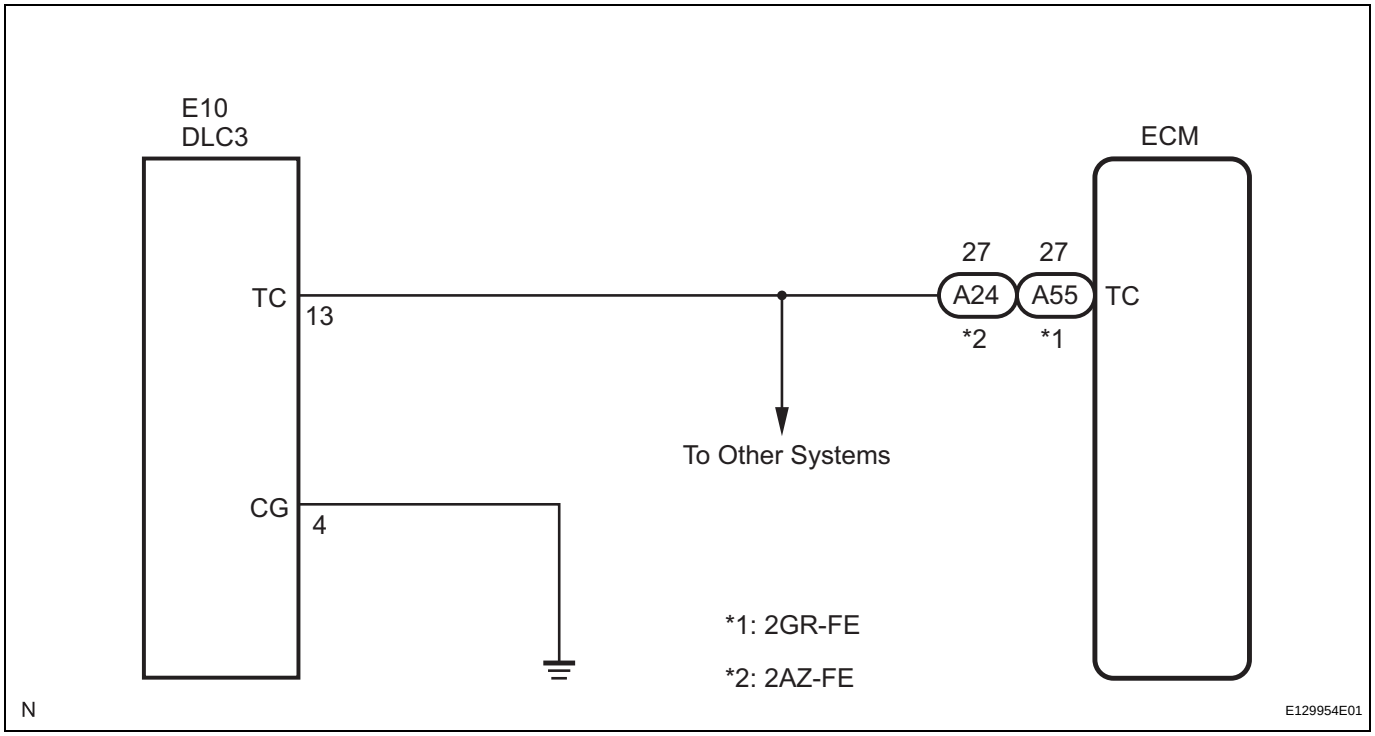

INSPECTION PROCEDURE

1 CHECK WIRE HARNESS (TERMINAL TC of DLC3 - ECM)

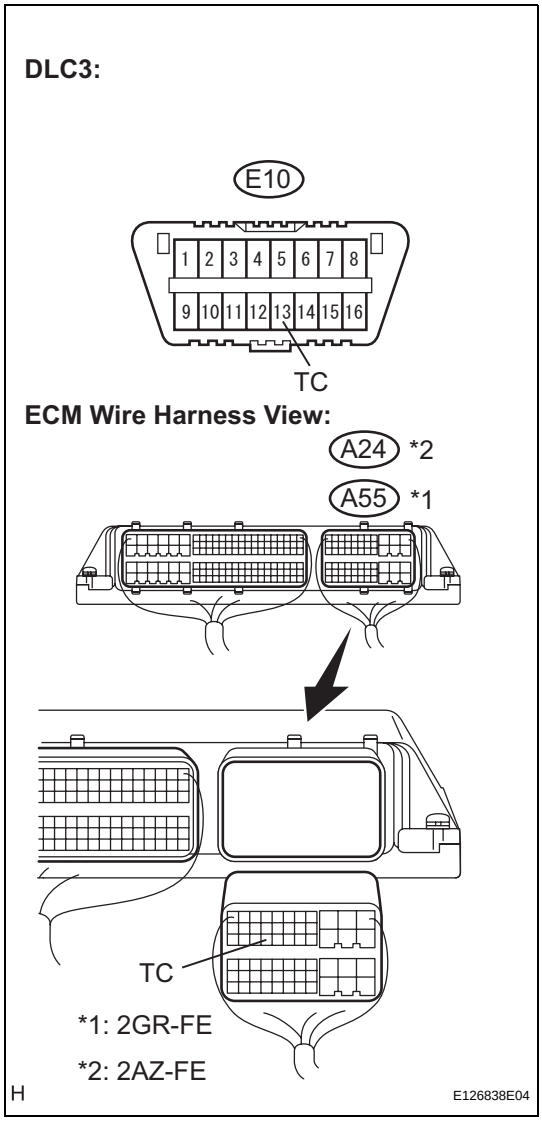

(a) Disconnect the A55 connector from the ECM. (2GR-FE)
(b) Disconnect the A24 connector from the ECM. (2AZ-FE)
(c) Measure the resistance according to the value(s) in the table below.

Standard resistance

Tester Connection	Condition	Specified Condition
A55-27 (TC) - E10-13 (TC)*1 A24-27 (TC) - E10-13 (TC)*2	Always	Below 1 Ω

NG → **REPAIR OR REPLACE HARNESS OR CONNECTOR (DLC3 - ECM)**

OK

2 CHECK WIRE HARNESS (TERMINAL CG of DLC3 - BODY GROUND)

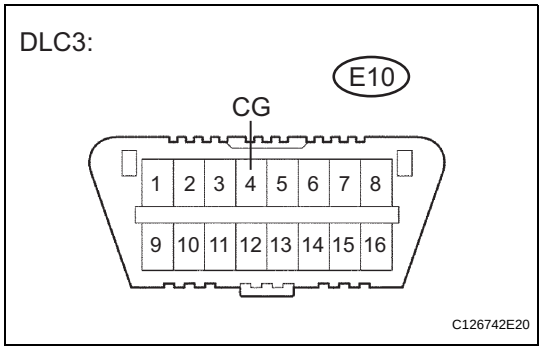

(a) Measure the resistance according to the value(s) in the table below.

Standard resistance

Tester connection	Condition	Specified condition
E10-4 (CG) - Body ground	Always	Below 1 Ω

NG → **REPAIR OR REPLACE HARNESS OR CONNECTOR (DLC3 - BODY GROUND)**

OK

3	CHECK WIRE HARNESS (TERMINAL TC of DLC3 - BODY GROUND)

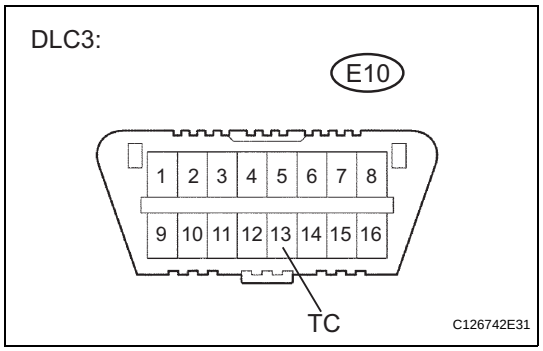

(a) Measure the resistance according to the value(s) in the table below.

Standard resistance

Tester Connection	Condition	Specified Condition
E10-13 (TC) - Body ground	Always	10 kΩ or higher

NG → **REPAIR OR REPLACE HARNESS OR CONNECTOR OR EACH ECU**

OK

PROCEED TO NEXT CIRCUIT INSPECTION SHOWN IN PROBLEM SYMPTOMS TABLE

CRUISE CONTROL MAIN SWITCH

COMPONENTS

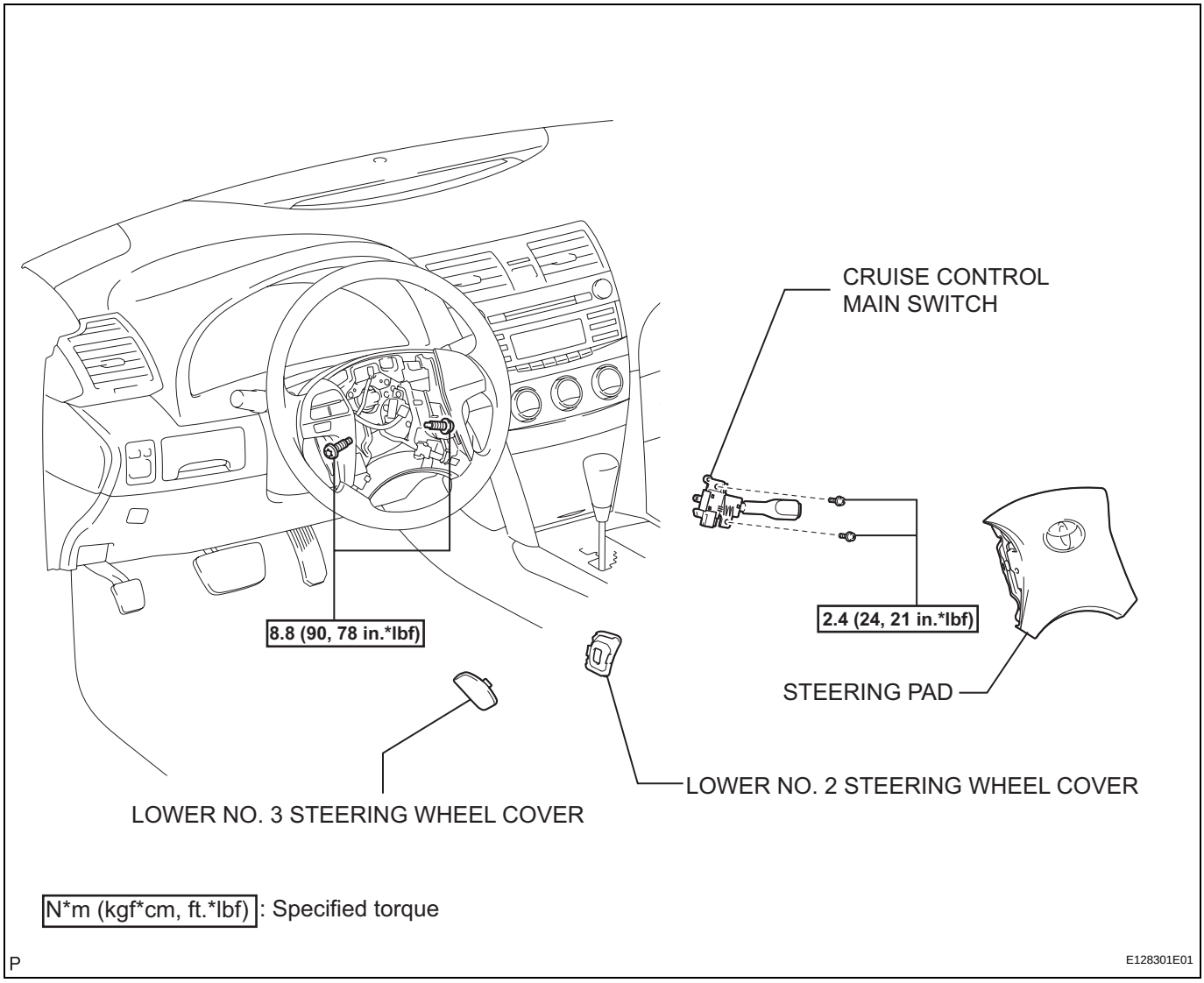

REMOVAL

1. **DISCONNECT CABLE FROM NEGATIVE BATTERY TERMINAL**
   CAUTION:
   Wait at least 90 seconds after disconnecting the cable from the negative (-) battery terminal to prevent airbag and seat belt pretensioner activation (See page RS-1).
2. **REMOVE LOWER NO. 3 STEERING WHEEL COVER (See page RS-349)**
3. **REMOVE LOWER NO. 2 STEERING WHEEL COVER (See page RS-349)**
4. **REMOVE STEERING PAD (See page RS-350)**
5. **REMOVE CRUISE CONTROL MAIN SWITCH**
   (a) Disconnect the connector.
   (b) Remove the 2 screws and the cruise control main switch.

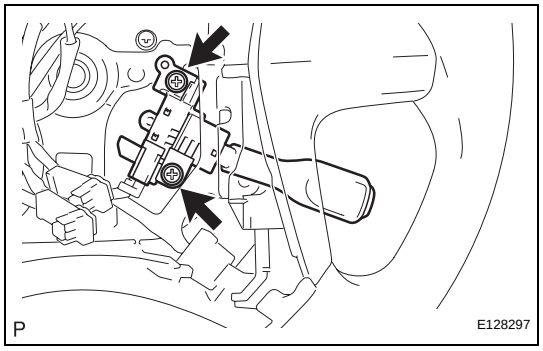

INSPECTION

1. INSPECT CRUISE CONTROL MAIN SWITCH

(a) Remove the cruise control main switch

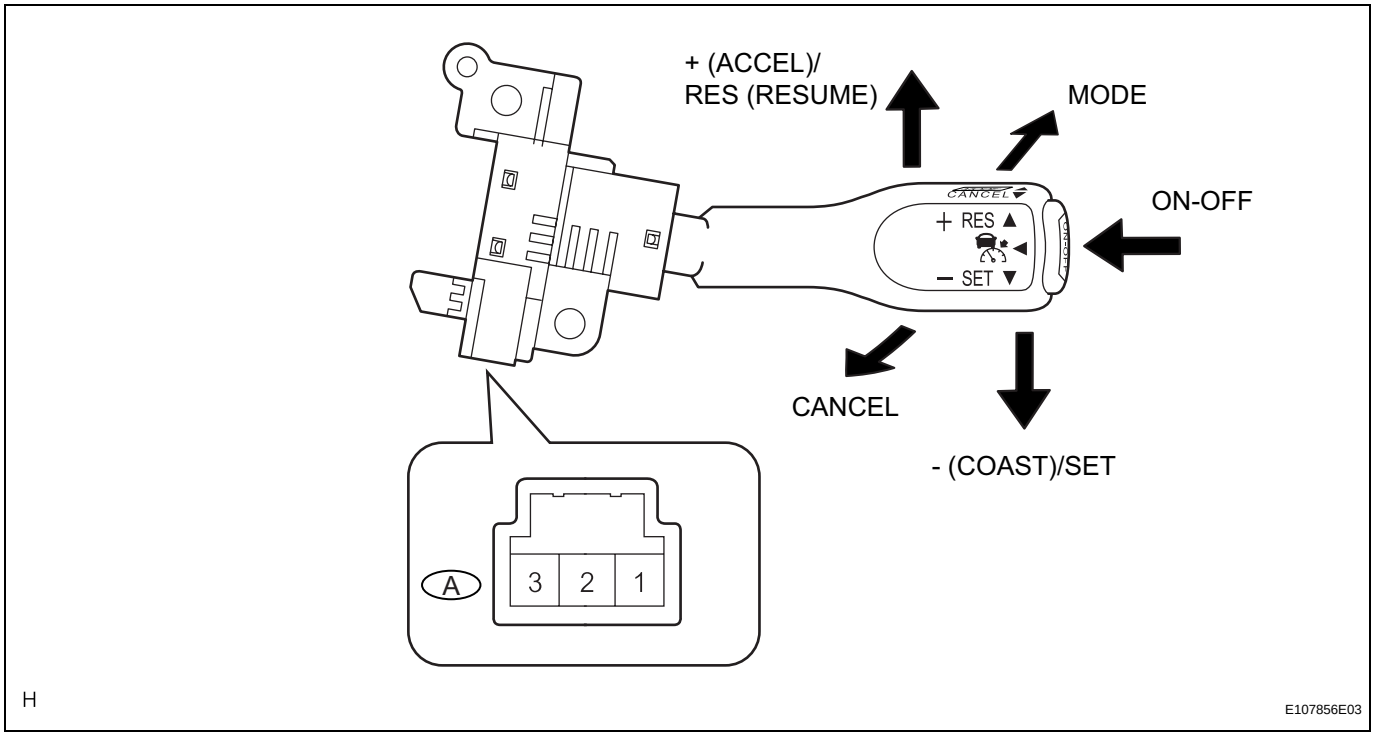

(b) Measure the resistance according to the value(s) in the table below.

Standard resistance

Tester Connection	Switch Condition	Specified Condition
A-1(ECC) - A-2(R/N), A-1(ECC) - A-3(CCS)	Neutral	10 kΩ or higher
A-1(ECC) - A-3(CCS)	+ (ACCEL)/RES (RESUME)	216 to 264Ω
A-1(ECC) - A-3(CCS)	- (COAST)/SET	567 to 693Ω
A-1(ECC) - A-3(CCS)	CANCEL	1,386 to 1,694Ω
A-1(ECC) - A-3(CCS)	Main Switch off	10kΩ or higher
A-1(ECC) - A-3(CCS)	Main Switch on	Below 1Ω
A-1(ECC) - A-2(R/N)	Main Switch on and Mode Switch on	Below 1Ω

If the result is not as specified, replace the cruise control main switch

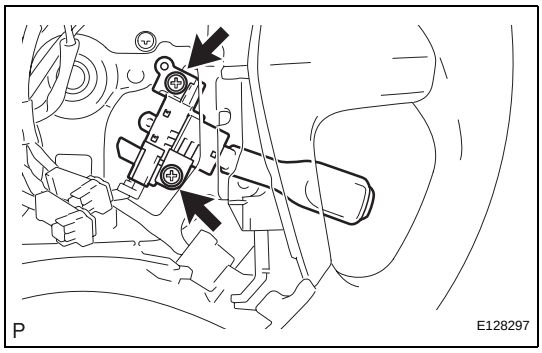

INSTALLATION

1. INSTALL CRUISE CONTROL MAIN SWITCH

(a) Install the cruise control main switch with the 2 screws.
Torque: 2.4 N*m (24 kgf*cm, 21 in.*lbf)

(b) Connect the connector.

2. INSTALL STEERING PAD (See page RS-350)

3. INSTALL LOWER NO. 2 STEERING WHEEL COVER (See page RS-352)

4. INSTALL LOWER NO. 3 STEERING WHEEL COVER (See page RS-351)

5. **CONNECT CABLE TO NEGATIVE BATTERY TERMINAL**

6. **INSPECT SRS WARNING LIGHT**
   (See page RS-32)

CLUTCH SWITCH

COMPONENTS

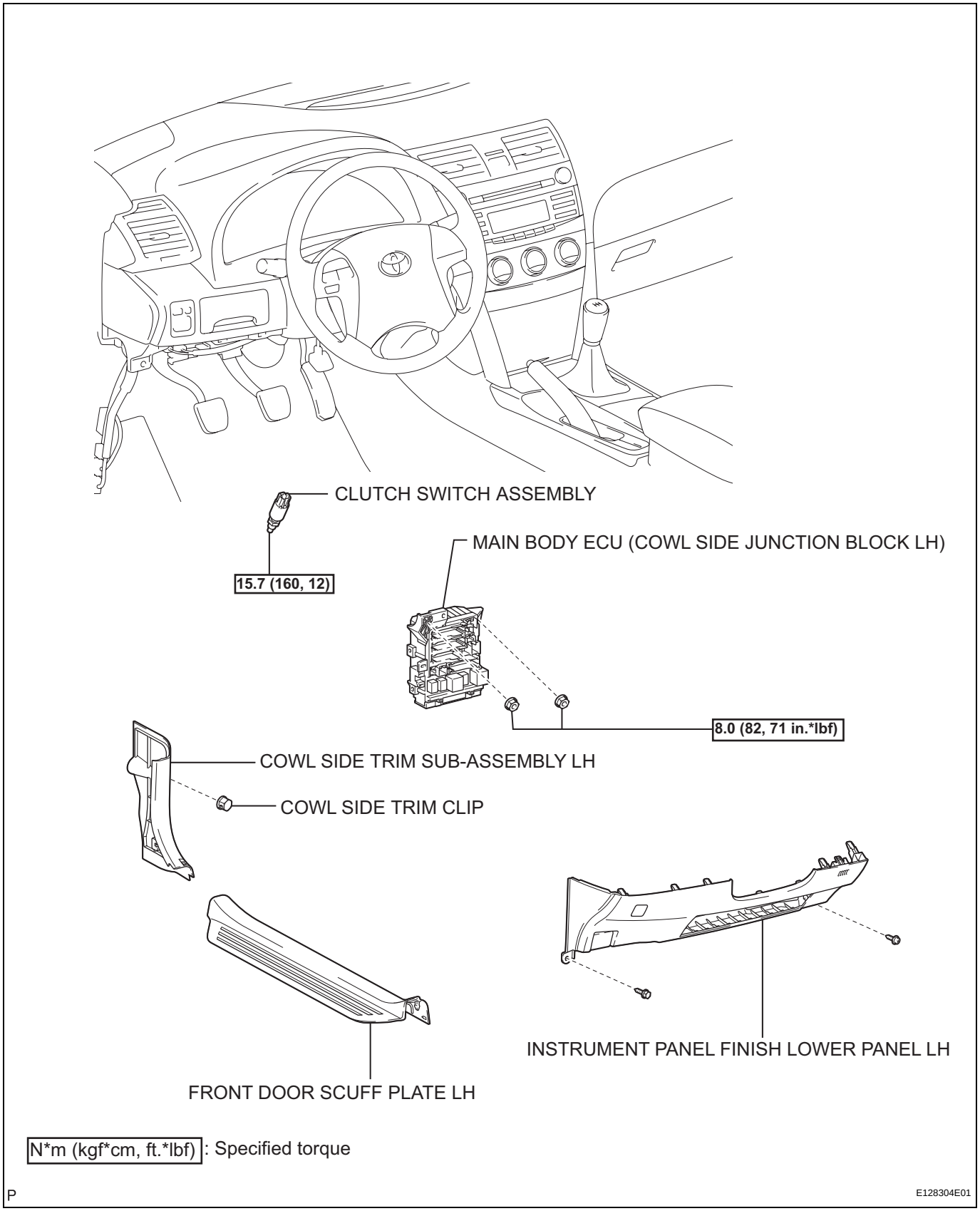

REMOVAL

1. **REMOVE FRONT DOOR SCUFF PLATE LH (See page IR-24)**
2. **REMOVE COWL SIDE TRIM SUB-ASSEMBLY LH (See page IR-25)**
3. **REMOVE INSTRUMENT PANEL FINISH LOWER PANEL LH (for TMC Made) (See page IP-20)**
4. **REMOVE INSTRUMENT PANEL FINISH LOWER PANEL LH (for TMMK Made) (See page IP-21)**
5. **REMOVE MAIN BODY ECU (COWL SIDE JUNCTION BLOCK LH)**
   (a) Disconnect all connectors.
   (b) Remove the 2 nuts and the main body ECU (cowl side junction block LH).
6. **REMOVE CLUTCH SWITCH ASSEMBLY**
   (a) Disconnect the connector.

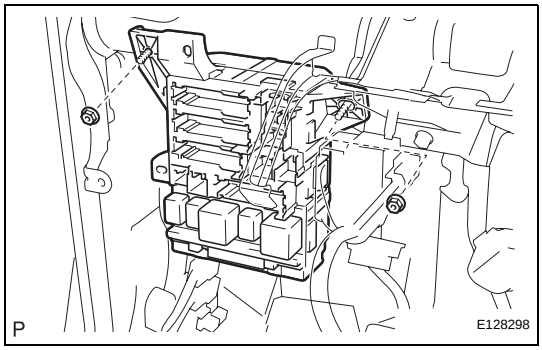

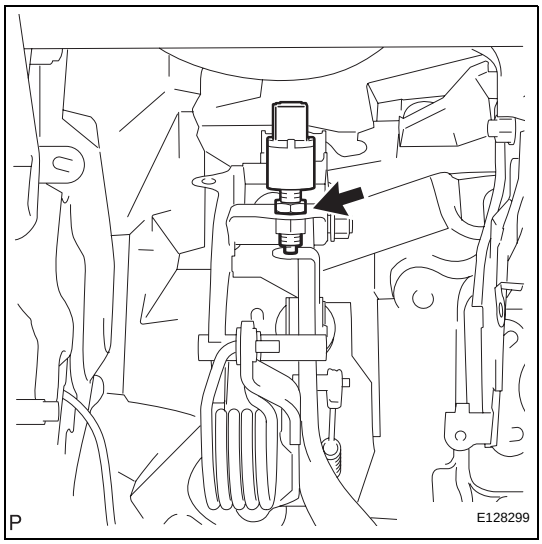

   (b) Loosen the nut and remove the clutch switch assembly.

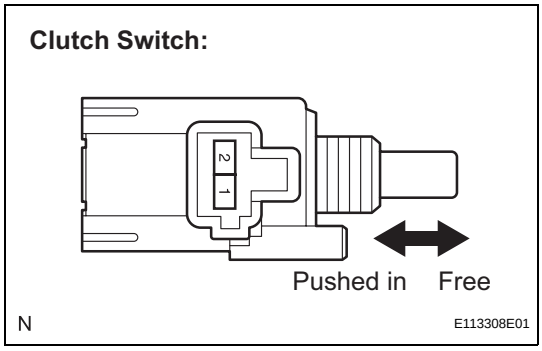

INSPECTION

1. **INSPECT CLUTCH SWITCH**
   (a) Remove the clutch switch.
   (b) Measure the resistance according to the value(s) in the table below.
   Standard resistance

Tester Connection	Condition	Specified Condition
1 - 2	Switch pin free (Clutch pedal depressed)	10 kΩ or higher
	Switch pin pushed in (Clutch pedal released)	Below 1Ω

CC

If the result is not as specified, replace the clutch switch.

INSTALLATION

1. INSTALL CLUTCH SWITCH ASSEMBLY

(a) Completely loosen the lock nut of the clutch switch assembly.

(b) Adjust the clutch switch until the threaded portion makes gentle contact with the cushion. Tighten the lock nut and verify the contact of the switch threaded portion with the cushion.
Torque: 15.7 N*m (160 kgf*cm, 12 ft.*lbf)

(c) Connect the connector.

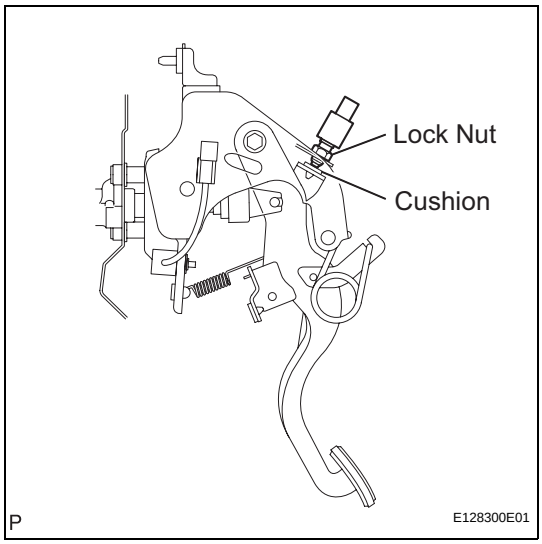

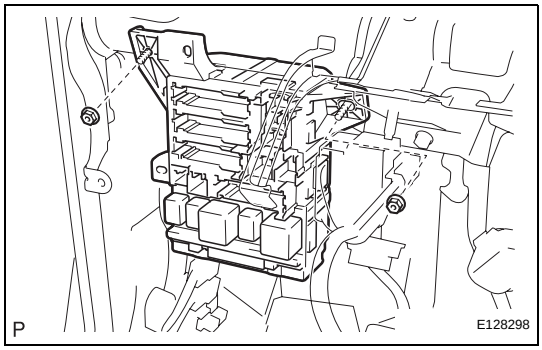

2. INSTALL MAIN BODY ECU (COWL SIDE JUNCTION BLOCK LH)

(a) Install the main body ECU (cowl side junction block LH) with the 2 nuts.
Torque: 8.0 N*m (82 kgf*cm, 71 in.*lbf)

(b) Connect all connectors.

3. INSTALL INSTRUMENT PANEL FINISH LOWER PANEL LH (for TMC Made) (See page IP-58)

4. INSTALL INSTRUMENT PANEL FINISH LOWER PANEL LH (for TMMK Made) (See page IP-59)

5. INSTALL COWL SIDE TRIM SUB-ASSEMBLY LH (See page IR-54)

6. INSTALL FRONT DOOR SCUFF PLATE LH (See page IR-54)