Renault TWINGO

Vehicle user manual

RENAULT

A passion for **performance**

ELF, partner of world series by RENAULT

RENAULT recommends ELF

Partners in cutting-edge automotive technology, Elf and Renault combine their expertise on both the racetrack and the city streets. This enduring partnership gives drivers a range of lubricants perfectly suited to Renault cars. Lasting protection and optimum performance for your engine – guaranteed. Whether changing the oil or simply topping up, to find the approved ELF lubricant best suited to your vehicle, ask your Renault dealer for a recommendation or consult your vehicle maintenance handbook.

www.lubricants.elf.com

elf

A brand from TOTAL

Welcome to your new vehicle

This driver's handbook contains the information necessary:
- for you to familiarise yourself with your vehicle, to use it to its best advantage and to benefit fully from the all the functions and the technical developments it incorporates.
- to ensure that it always gives the best performance by following the simple, but comprehensive advice concerning regular maintenance.
- to enable you to deal quickly with minor faults not requiring specialist attention.

It is well worth taking a few minutes to read this handbook to familiarise yourself with the information and guidelines it contains about the vehicle and its functions and new features. If certain points are still unclear, our Network technicians will be only too pleased to provide you with any additional information.

To help you, you will find the following symbols:

and These appear in the vehicle and indicate that you should consult the manual for detailed information and/or limits on operations with respect to your vehicle's equipment.

anywhere in the manual indicates a hazard, danger or a safety recommendation.

The descriptions of the models given in this handbook are based on the technical specifications at the time of writing. **This handbook covers all items of equipment** (both standard and optional) **available for these models but whether or not these are fitted to the vehicle depends on the version, options selected and the country where the vehicle is sold.**
This handbook may also contain information about items of equipment to be introduced later in the model year.
Throughout the manual, the "approved Dealer" is your RENAULT Dealer.

Enjoy driving your new vehicle.

Translated from English. Copying or translation, in part or in full, is forbidden unless prior written permission has been obtained from the vehicle manufacturer.

0.2

C O N T E N T S

Sections

Getting to know your vehicle 1

Driving 2

Your comfort 3

Maintenance 4

Practical advice 5

Technical specifications 6

Alphabetical index 7

0.4

Section 1: Getting to know your vehicle

Key/radio frequency remote controls: general information, use, deadlocking . . . 1.2
Opening and closing the doors . . . 1.6
Locking, unlocking the opening elements . . . 1.8
Automatic locking when driving . . . 1.10
Front seats. . . . 1.11
Seat belts. . . . 1.12
Additional methods of restraint . . . 1.15
    in addition to the front seat belts . . . 1.15
    to the rear seat belts . . . 1.19
    side. . . . 1.20
Steering wheel/Power-assisted steering . . . 1.22
Child safety: general information . . . 1.23
    choosing a child seat mounting . . . 1.26
    fitting a child seat, general information. . . . 1.29
Child safety: attachment by seat belt or by Isofix system . . . 1.31
    deactivating/activating the front passenger airbag. . . . 1.36
Rear view mirrors . . . 1.39
Driving position . . . 1.40
Instrument panel, on-board computer . . . 1.44
Clock and outdoor temperature. . . . 1.56
Exterior lighting and signals. . . . 1.58
Audible and visual signals . . . 1.61
Headlight beam adjustment. . . . 1.62
Washers, wipers . . . 1.64
Fuel tank (filling with fuel) . . . 1.68

KEY, RADIO FREQUENCY REMOTE CONTROL: general information (1/2)

Radio frequency remote control unit *A* or *B*

1 Locks all the opening elements.
2 Unlocks all the opening elements.
3 Ignition key, front left door and fuel filler cap.
4 Opens the tailgate only.

Remote control with switchblade key

5 Locks/Unlocks the key insert for remote control ***B***. To release the insert from its housing, press button ***5***, it comes out automatically. Press button ***5*** and guide the insert back into its housing.

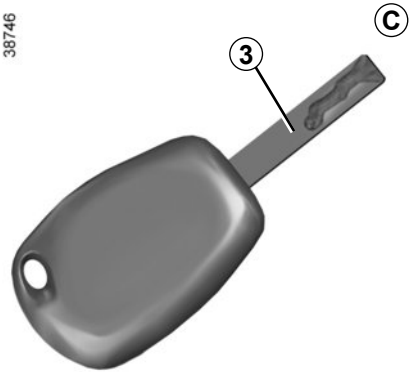

Key *C*

Advice

Avoid leaving the remote control in hot, cold or humid areas.

Radio frequency remote control operating range

This varies according to the surroundings: take care not to lock or unlock the doors by inadvertently pressing the buttons on the remote control.

Note: If a door or the luggage compartment lid is open or not closed properly, the doors and luggage compartment lid lock/unlock quickly.

Interference
Interference by factors in the immediate vicinity (external installations or the use of equipment operating on the same frequency as the remote control) may affect the operation of the remote control.

The key must not be used for any function other than those described in the handbook (removing the cap from a bottle, etc.).

Replacement and additional keys or remote controls.

You must only contact an approved dealer:

– If you need to replace a key it will be necessary to take the vehicle and all of its keys to an approved Dealer in order to initialise the system.

– Depending on the vehicle, you have the option of using up to four remote controls.

Remote control unit failure

Make sure that the correct battery type is being used, and that the battery is in good condition and inserted correctly. These batteries have a service life of approximately two years.

Refer to Section 5: “Radio frequency remote control: batteries” for the battery changing procedure.

Driver’s responsibility when parking or stopping the vehicle

Never leave an animal, child or adult who is not self-sufficient alone on your vehicle, even for a short time.
They may pose a risk to themselves or to others by starting the engine, activating equipment such as the electric windows or locking the doors.
Also, in hot and/or sunny weather, please remember that the temperature inside the passenger compartment increases very quickly.

RISK OF DEATH OR SERIOUS INJURY.

RADIO FREQUENCY REMOTE CONTROL UNIT: use

Remote controls ***A*** and ***B*** are used to lock or unlock the doors.
They are powered by a battery which must be replaced (refer to the information on “Radio frequency remote control: batteries” in Section 5).

Locking the doors

Press locking button ***1***.
The side indicator lights and hazard warning lights flash **twice** to indicate that the doors have been **locked**.
If a door or the tailgate is open or not properly shut, the doors or tailgate lock then quickly unlock and the hazard warning lights and indicator lights do not flash.

Unlocking the doors

Pressing button ***2*** unlocks the doors and tailgate.

The side indicator lights and hazard warning lights flash **once** to indicate that the doors have been **unlocked**.

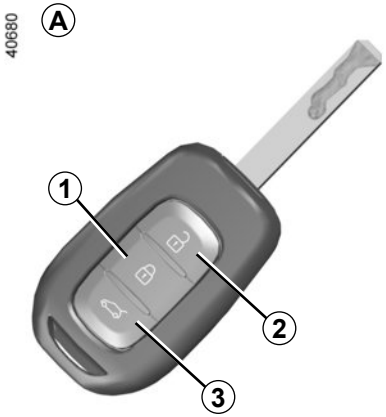

Unlocking the boot only

Press and hold ***3*** remote control button ***A*** or ***B***. The boot opens slightly.

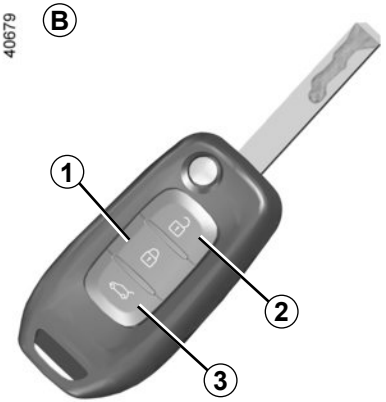

Note: the key buttons are inactive with the engine running, ignition on and in accessories position.

Driver’s responsibility when parking or stopping the vehicle
Never leave an animal, child or adult who is not self-sufficient alone on your vehicle, even for a short time.
They may pose a risk to themselves or to others by starting the engine, activating equipment such as the electric windows or locking the doors.
Also, in hot and/or sunny weather, please remember that the temperature inside the passenger compartment increases very quickly.
RISK OF DEATH OR SERIOUS INJURY.

DEADLOCKING

If fitted to the vehicle, this allows the doors to be locked and prevents them from being opened with the interior handles (for example, by breaking the window and then trying to open the doors from the inside).

Press button ***1*** twice in quick succession.

The hazard warning lights and indicator lights flash **three** times to indicate locking.

Special note: deadlocking is not possible if the hazard warning lights or the side lights are lit.

Never use deadlocking if someone is still inside the vehicle.

Opening the doors from the outside

Front doors

With the doors unlocked, place your hand under the handle ***1*** and pull it towards you.

As a safety precaution, the doors should only be opened or closed when the vehicle is stationary.

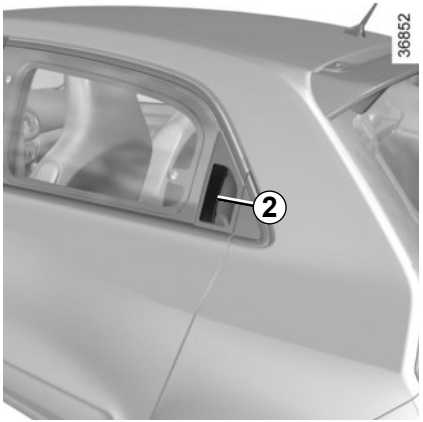

Rear doors

With the doors unlocked, slide your hand into the handle ***2*** and pull towards you.

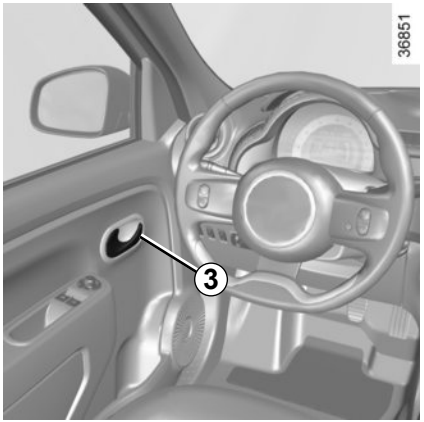

Opening from the inside

Pull the handle ***3***.

Lights-on reminder buzzer

If you have switched off the ignition and left the lights switched on, a reminder buzzer will sound when a door is opened.

Door/tailgate open buzzer

If an opening (door or boot) is left open or improperly closed, once the vehicle reaches around 12 mph (20 km/h), a warning light is displayed together with a beep.

Special note

Depending on the vehicle, accessories (e.g. radio) stop working:
- with the key removed from the ignition-starter switch and when the driver's side door is open;
- when the doors are locked.

Key reminder alarm

If you have left the key in the ignition, an alarm will sound when the driver's door is opened.

Child safety

To make it impossible for the rear doors to be opened from the inside, move lever ***4*** on each door and check from the inside that the doors are securely locked.

Driver's responsibility when parking or stopping the vehicle

Never leave an animal, child or adult who is not self-sufficient alone on your vehicle, even for a short time.
They may pose a risk to themselves or to others by starting the engine, activating equipment such as the electric windows or locking the doors.
Also, in hot and/or sunny weather, please remember that the temperature inside the passenger compartment increases very quickly.
RISK OF DEATH OR SERIOUS INJURY.

Locking/unlocking from the outside

This is done using the remote control: please refer to the information on “Radio frequency remote control: general information” in Section 1.

In some cases, the radio frequency remote control may not work:
– if the remote control battery is worn or flat, etc.
– if appliances are operating on the same frequency as the remote control (mobile phone, etc.);
– vehicle located in a high electromagnetic radiation zone.

It is then possible:
– use the radio frequency remote control key or the emergency key to unlock the front left-hand door;
– to use the interior door locking/unlocking control (refer to the following pages).

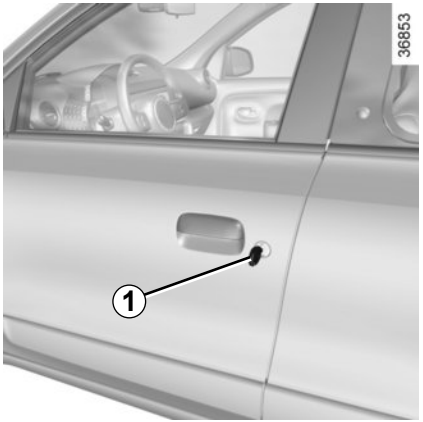

Using the key

Insert the key into the lock ***1*** and lock or unlock the front left-hand door.

Never leave your vehicle with the key inside.

With the ignition on, press the central locking button ***2*** to unlock the other doors (doors and boot).

Interior locking/unlocking door control

Switch ***2*** simultaneously controls the doors and the boot.

If a door or the tailgate is open or not closed properly, the doors and tailgate lock/unlock quickly.

If you need to transport objects with the boot open, the other opening elements can still be locked: **with the engine stopped,** press switch ***2*** for more than five seconds to lock the other opening elements.

Locking the opening elements without the radio frequency remote control

For example, in the event of a discharged battery or the radio frequency remote control temporarily not working.

With the engine off, the key removed from the ignition and the front left-hand door open, press the switch ***2*** for more than 5 seconds.

When the door is closed, all the doors and the tailgate will be locked.

Driver's responsibility

If you decide to keep the doors locked when you are driving, remember that it may be more difficult for those assisting you to gain access to the passenger compartment in the event of an emergency.

Door and tailgate status indicator

With the ignition on, the warning light integrated in switch ***2*** informs you of the locking status of the opening elements:

– indicator light on, the doors and tailgate are locked,

– indicator light off, the doors and tailgate are unlocked.

When you lock the doors, the indicator light remains lit and then goes out.

Operating principle

After the vehicle is started, the system automatically locks the doors when you are driving at approximately12 mph (20 km/h)

The door can be unlocked:

– by pressing the button ***1*** to unlock the doors;

– by opening a front door (vehicle stationary).

Note: If a door is opened or closed, it will automatically lock again when the vehicle reaches a speed of 12 mph (20 km/h).

Activating/deactivating the function

With the engine running, press the button ***1*** for approximately 5 seconds, until you hear a warning beep.

Operating faults

If you experience an operating fault (no automatic locking, the indicator light incorporated in button ***1*** does not light up when trying to lock the opening elements, etc.), firstly check that the opening elements are properly closed. If they are properly closed, contact an authorised dealer.

Driver's responsibility

If you decide to keep the doors locked when you are driving, remember that it may be more difficult for those assisting you to gain access to the passenger compartment in the event of an emergency.

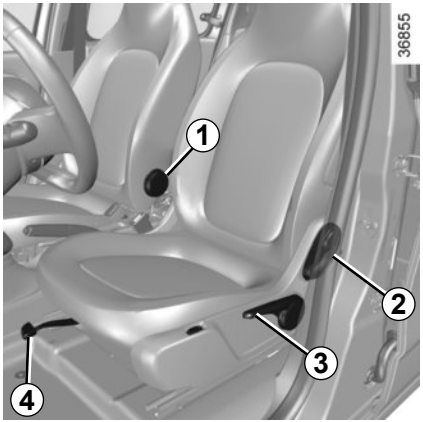

To move the seat forwards or backwards

Lift handle ***4*** to unlock. Release the handle once the seat is in the correct position and ensure that the seat is locked.

To raise or lower the seat base

Move the lever ***3*** as many times as necessary upwards or downwards.

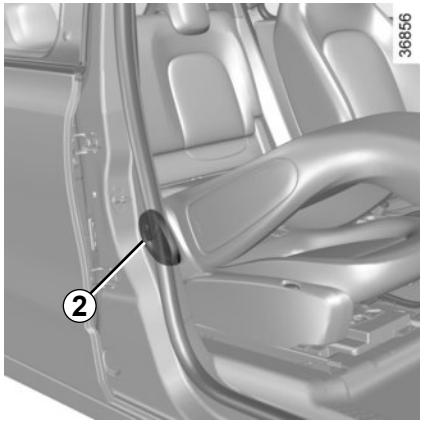

To tilt the seatback

Depending on the vehicle, activate control ***1*** or ***2*** and tilt the seatback to the desired position.

For safety reasons, carry out any adjustments when the vehicle is not being driven.
Nothing should be placed on the floor (area in front of driver) as such objects may slide under the pedal during braking manoeuvres, thus obstructing its use.

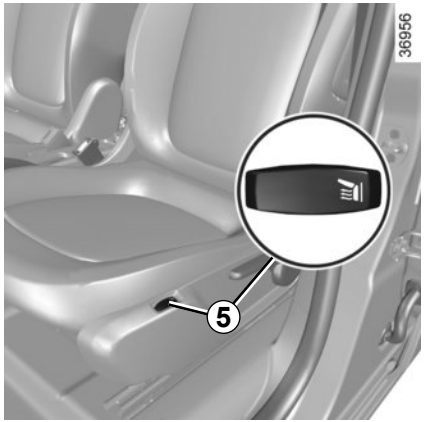

Heated seats

With the ignition on, press the switch ***5*** for the seat desired. The indicator light in the switch lights up.
The system, which has a thermostat, regulates the heating and deactivates it if necessary.

We would advise you not to recline the seatbacks too far to ensure that the effectiveness of the seat belts is not reduced.

Always wear your seat belt when travelling in your vehicle. You must also comply with the legislation of the particular country you are in.

Make sure that the rear bench seat is locked in position correctly so that the rear seat belts will operate efficiently. Refer to the information on the “Rear bench seat: functions” in Section 3.

Incorrectly adjusted or twisted seat belts may cause injuries in the event of an accident.

Use one seat belt per person, whether child or adult.

Even pregnant women should wear a seat belt. In this case, ensure that the lap belt is not exerting too much pressure on the abdomen, but do not allow any slack.

Before starting, first adjust your driving position, then ask all occupants to adjust their seat belts to ensure optimum protection.

Adjusting your driving position

- **Sit well back in your seat** (having first removed your coat or jacket). This is essential to ensure your back is positioned correctly;
- **adjust the distance between the seat and the pedals.** Your seat should be as far back as possible while still allowing you to depress the clutch pedal fully. The seatback should be adjusted so that your arms are slightly bent when you hold the steering wheel;
- **adjust the height of the seat.** This adjustment allows you to select the seat position which offers you the best possible view**;**
- **adjust the position of the steering wheel.**

Adjusting the seat belts

Sit with your back firmly against the seatback.

Shoulder strap ***1*** should be as close as possible to the base of the neck but not on it.

Lap belt ***2*** should be worn flat over the thighs and against the pelvis.

The belt should be worn so that it is as close as possible to your body, i.e.: avoid wearing heavy clothing or keeping bulky objects under the belts, etc.

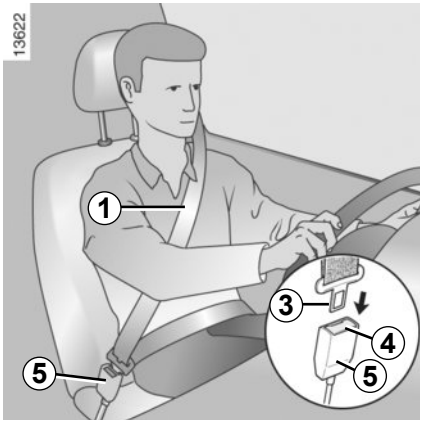

Locking

Unwind the belt **slowly and smoothly** and ensure that buckle ***3*** locks into catch ***5*** (check that it is locked by pulling on buckle ***3***).

If the belt jams, allow it to return slightly before attempting to unwind it again.

If your seat belt is completely jammed, pull slowly, but firmly, so that just over 3 cm unwinds. Allow it to return slightly before attempting to unwind it again.

If there is still a problem, contact an approved dealer.

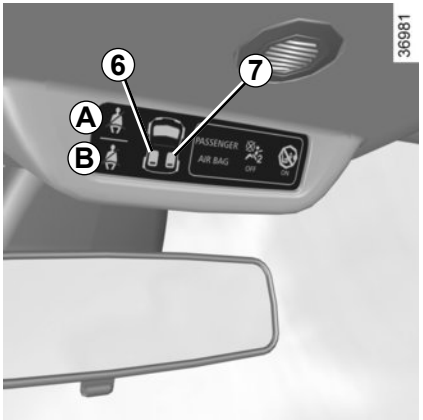

Front seatbelt reminder warning light *A*

This lights up on the central display when the engine is started then, if the driver's or front passenger's seat belt (if this seat is occupied) is not fastened, it flashes and a beep sounds for around 2 minutes.

Note: an object placed on the passenger seat base may activate the warning light in some cases.

Rear seatbelt reminder alert *B*

Warning light comes on on the central display when the engine is started, and goes off after around 30 seconds.
Warning lights ***6*** and ***7*** show the status of the rear seatbelts:
– red: seatbelt unfastened;
– green: seatbelt fastened.

If the right and/or left rear passenger seatbelt is unfastened once the vehicle has reached around 12 mph (20 km/h), warning light flashes and the indicator for the relevant seat turns red, alongside a beep.
Check that the rear passengers are wearing seat belts and that the number of seat belts shown as fastened corresponds to the number of rear bench seat places occupied.

Unlocking

Press button ***4*** and the seat belt will be rewound by the inertia reel. Guide the belt.

Rear seat belts *8*

The belts are locked, unlocked and adjusted in the same way as the front belts.

Check that the rear seat belts are positioned and operating correctly each time the rear bench seat is moved.

The following information applies to the vehicle's front and rear seat belts.

– No modification may be made to the component parts of the originally fitted restraint system: seat belts, seats and their mountings. For special operations (e.g. fitting child seats), contact an authorised dealer.
– Do not use devices which allow any slack in the belts (e.g. clothes pegs, clips, etc.): a seat belt which is worn too loosely may cause injury in the event of an accident.
– Never wear the shoulder strap under your arm or behind your back.
– Never use the same belt for more than one person and never hold a baby or child on your lap with your seat belt around them.
– The belt should never be twisted.
– Following an accident, have the seat belts checked and replaced if necessary. Always replace your seat belts as soon as they show any signs of wear.
– When positioning the rear bench seat, make sure that the seat belts and buckles are correctly positioned so that they can be used properly.
– Make sure that the buckle is inserted into the appropriate catch.
– Ensure that no objects are placed in the area around the seat belt catch as they could prevent it from being properly secured.
– Make sure the seat belt catch is properly positioned (it should not be hidden away, crushed or flattened by people or objects).

METHODS OF RESTRAINT IN ADDITION TO THE FRONT SEAT BELTS (1/4)

Depending on the vehicle, they will consist of:

- **front seat belt inertia reel pretensioners;**
- **chest-level load limiters;**
- **airbags – Driver and passenger front.**

These systems are designed to act independently or together when the vehicle is subjected to a frontal impact.

Depending on the severity of the impact, the system can trigger:

- seat belt locking;
- the seat belt inertia reel pretensioner (which engages to correct seat belt slack);
- the airbags.

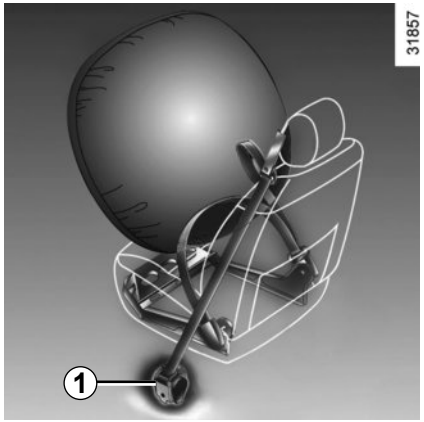

Pretensioners

The pretensioners hold the seat belt against the body, holding the occupant more securely against the seat, thus increasing the seat belt's efficiency.

With the ignition on, following a significant frontal impact and depending on the severity of the impact, the system may trigger the seat belt inertia reel pretensioner ***1***, which instantly retracts the seat belt.

- Have the entire restraint system checked following an accident.
- No operation whatsoever is permitted on any part of the system (pretensioners, airbags, computers, wiring) and the system components must not be reused on any other vehicle, even if identical.
- To avoid incorrect triggering of the system which may cause injury, only qualified personnel from an approved Dealer may work on the pretensioner and air bag system.
- The electric trigger system may only be tested by a specially trained technician using special equipment.
- When the vehicle is scrapped, contact an approved dealer for disposal of the pretensioner and airbags gas generators.

Load limiter

Above a certain severity of impact, this mechanism is used to limit the force of the belt against the body so that it is at an acceptable level.

driver and passenger front Airbags

Fitted to the driver and passenger side.

The presence of this equipment is indicated by the word “Airbag” on the steering wheel, dashboard (in area airbag ***A***) and, depending on the vehicle, a label on the lower section of the windscreen.

Each airbag system consists of:

– an airbag and gas generator fitted on the steering wheel for the driver and in the dashboard for the passenger;

– an electronic unit for system monitoring which controls the gas generator electrical trigger system;

– a single warning light on the instrument panel.

The airbag system uses pyrotechnic principles. This explains why, when the airbag inflates, it will generate heat, produce smoke (this does not mean that a fire is about to start) and make a banging noise. In a situation where an airbag is required, it will inflate immediately and this may cause some minor, superficial grazing to the skin or other problems.

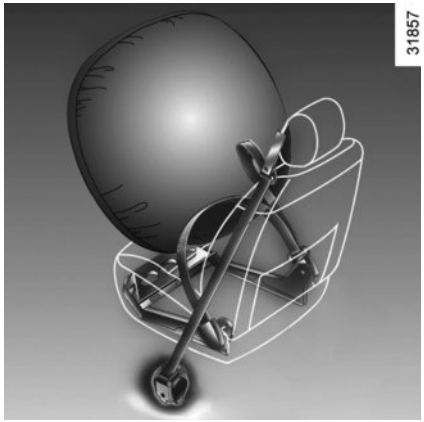

Operation

This system is only operational when the ignition is switched on.

In a severe **frontal** impact, the airbags inflate rapidly, cushioning the impact of the driver's head and chest against the steering wheel and of the front passenger against the dashboard. The airbags then deflate immediately so that the passengers are not in any way hindered from leaving the vehicle.

Operating faults

This warning light *2* will light up on the instrument panel when the ignition is switched on and then go out after a few seconds.

If it does not light up when the ignition is switched on, or comes on when the engine is running, there is a fault in the system.

Contact your approved Dealer as soon as possible. Your protection will be reduced until this fault is rectified.

METHODS OF RESTRAINT IN ADDITION TO THE FRONT SEAT BELTS (4/4)

All of the warnings below are given so that the airbag is not obstructed in any way when it is inflated and also to prevent the risk of serious injuries caused by items which may be dislodged when it inflates.

Warnings concerning the driver's airbag

– Do not modify the steering wheel or the steering wheel boss.

– Do not cover the steering wheel boss under any circumstances.

– Do not attach any objects (badge, logo, clock, telephone holder, etc.) to the steering wheel boss.

– The steering wheel must not be removed (except by qualified personnel from our Network).

– When driving, do not sit too close to the steering wheel. Sit with your arms slightly bent (see the information on "Adjusting your driving position" in Section 1). This will allow sufficient space for the air bag to deploy correctly and be fully effective.

Warnings concerning the passenger airbag

– Do not attach or glue any objects (badge, logo, clock, telephone holder, etc.) to the dashboard on or near the airbag.

– Do not place anything between the dashboard and the passenger (pet, umbrella, walking stick, parcels, etc.).

– The passenger must not put his or her feet on the dashboard or seat as there is a risk that serious injuries may occur. In general, parts of the body should be kept away from the dashboard (knees, hands, head, etc.).

– The devices in addition to the front passenger seat belt should be reactivated as soon as a child seat is removed, to ensure the protection of the passenger in the event of an impact.

A REAR-FACING CHILD SEAT MUST NOT BE FITTED TO THE FRONT PASSENGER SEAT UNLESS THE ADDITIONAL RESTRAINT SYSTEMS, I.E. THE PASSENGER AIR BAG, ARE DEACTIVATED.

(refer to the information on "Child safety: deactivating/activating the front passenger airbag" in Section 1)

Force limiter

Above a certain severity of impact, this mechanism is used to limit the force of the belt against the body so that it is at an acceptable level.

– Have the entire restraint system checked following an accident.

– No operation whatsoever is permitted on any part of the system (air bags, electronic control units, wiring) and the system components must not be reused on any other vehicle, even if identical.

– Only qualified personnel from our Network may work on the air bags; otherwise the system may trigger accidentally and cause injury.

Side Airbags

This airbag may be fitted to each of the front seats and is activated at the sides of the seats (door side) to protect the occupants in the event of a severe side impact.

Depending on the vehicle, a marking on the windscreen informs you of the presence of additional means of restraint (air bags, pretensioners, etc.) in the passenger compartment.

Warning relating to the side airbag

– **Fitting seat covers:** seats equipped with an airbag require covers specifically designed for your vehicle. Contact an approved Dealer to find out if these covers are available. The use of any covers other than those designed for your vehicle (and including those designed for another vehicle) may affect the operation of the airbags and reduce your protection.

– Do not place any accessories, objects or even pets between the seatback, the door and the internal fittings. Do not cover the seatback with any items such as clothes or accessories. This may prevent the air bag from operating correctly or cause injury when the airbag is deployed.

– No work or modification whatsoever may be carried out on the seat or internal fittings, except by qualified personnel from an approved Dealer.

ADDITIONAL METHODS OF RESTRAINT

All of the warnings below are given so that the airbag is not obstructed in any way when it is inflated and also to prevent the risk of serious injuries caused by items which may be dislodged when it inflates.

The airbag is designed to complement the action of the seat belt. Both the air bags and seat belts are integral parts of the same protection system. It is therefore essential to wear seat belts at all times. If seat belts are not worn, the occupants are exposed to the risk of serious injury in the event of an accident. It may also increase the risk of minor superficial injuries occurring when the airbag is deployed, although such minor injuries are always possible with air bags.

If the vehicle should overturn or in the event of a rear impact, however severe, the pretensioners and airbags are not always triggered. Impacts to the underside of the vehicle, e.g. from pavements, potholes or stones, can all trigger these systems.

– No work or modification **whatsoever** may be carried out on any part of the airbag system (airbags, pretensioners, computer, wiring harness, etc.), except by qualified Network personnel.

– To ensure that the system is in good working order and to avoid accidental triggering of the system which may cause injury, only qualified Network personnel may work on the airbag system.

– As a safety precaution, have the airbag system checked if your vehicle has been involved in an accident, or is stolen or broken into.

– When selling or lending the vehicle, inform the user of these points and hand over this handbook with the vehicle.

– When scrapping your vehicle, contact your approved Dealer for disposal of the gas generator(s).

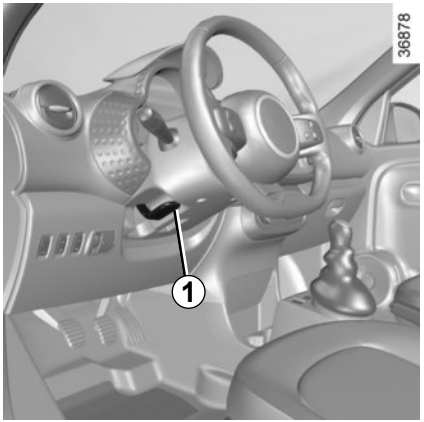

Steering wheel height adjustment

Lower the lever ***1*** and place the steering wheel in the required position; raise the lever beyond the point of resistance to lock the steering wheel.

Make sure that the steering wheel is correctly locked.

For safety reasons, only adjust the steering wheel when the vehicle is stationary.

Power Assisted Steering

Never drive with an inadequately charged battery.

Variable power assisted steering

The variable power assisted steering system is equipped with an electronic control system which alters the level of assistance to suit the vehicle speed.

Steering is made easier when manoeuvring (for added comfort) while the force needed to steer increases progressively as the speed rises (for enhanced safety at high speeds).

Never leave the steering wheel at full lock while stationary.

With the engine switched off, or if there is a system fault, it is still possible to turn the steering wheel. The force required will be greater.

Never switch off the ignition when travelling downhill, and avoid doing so in normal driving (assistance is not provided).

Carrying children

Please ensure that you comply with the legislation of your country.

Children, and adults, must be correctly seated and strapped in for all journeys. The children being carried in your vehicle are your responsibility.

A child is not a miniature adult. Children are at risk of specific injuries as their muscles and bones have not yet finished growing. The seat belt alone would not provide suitable protection. Use an approved child seat and ensure you use it correctly.

To prevent the doors being opened, use the “Child safety” device (refer to the information on “Opening and closing the doors” in Section 1).

A collision at 30 mph (50 km/h) is the same as falling a distance of 10 metres.
Transporting a child without a restraint is the equivalent of allowing him or her to play on a fourth-floor balcony without railings.
Never travel with a child held in your arms. In the event of an accident, you will not be able to keep hold of the child, even if you yourself are wearing a seat belt.
If your vehicle has been involved in a road accident, replace the child seat and have the seat belts and ISOFIX anchorage points checked.

Driver’s responsibility when parking or stopping the vehicle

Never leave an animal, child or adult who is not self-sufficient alone on your vehicle, even for a short time.

They may pose a risk to themselves or to others by starting the engine, activating equipment such as the electric windows or by locking the doors.

Also, in hot and/or sunny weather, please remember that the temperature inside the passenger compartment increases very quickly.

RISK OF DEATH OR SERIOUS INJURY.

Using a child seat

The level of protection offered by the child seat depends on its ability to restrain your child and on its installation. Incorrect installation compromises the protection it offers the child in the event of harsh braking or an impact.

Before purchasing a child seat, check that it complies with the regulations for the country you are in and that it can be fitted in your vehicle. Consult an approved dealer to find out which seats are recommended for your vehicle.

Before fitting a child seat, read the manual and respect its instructions. If you experience any difficulties during installation, contact the manufacturer of the equipment. Keep the instructions with the seat.

Set a good example by always fastening your seat belt and teaching your child:
– to strap themselves in correctly;
– to always get in and out of the car at the kerb, away from busy traffic.

Do not use a second-hand child seat or one without an instruction manual.

Check that there are no objects in the vicinity of the child seat which could impede its operation.

Never leave a child unattended in the vehicle.

Check that your child is always strapped in and that the belt or safety harness used is correctly set and adjusted. Avoid wearing bulky clothing which could cause the belts to slacken.

Never let your child put their head or arms out of the window.

Check that the child is in the correct position for the entire journey, especially if asleep.

Rear-facing child seats
A baby's head is, proportionally, heavier than that of an adult and its neck is very fragile. Transport the child in this position for as long as possible (until the age of 2 at the very least). It supports both the head and the neck.
Choose a bucket type seat for best side protection and change it as soon as the child's head is higher than the shell.

Forward-facing child seats
The child's head and abdomen need to be protected as a priority. A forward-facing child seat which is firmly attached to the vehicle will reduce the risk of impact to the head. Ensure your child travels in a forward-facing seat with a harness for as long as their size permits.
Choose a bucket type seat for optimum side protection.

Booster cushions
From 15 kg or 4 years, the child can travel using a booster seat, which will enable the seat belt to be adapted to suit his/her size and shape. The booster seat cushion must be fitted with guides to position the seat belt on the child's thighs rather than the stomach. It is recommended that you use a seat-back fitted with a belt strap guide which can be adjusted in terms of height to position the seat belt in the centre of the shoulder. It must never rest on the neck or on the arm.
Choose a bucket type seat for optimum side protection.

CHILD SAFETY: choosing a child seat mounting (1/3)

There are two ways of attaching child seats: via the seat belt or using the ISOFIX system.

Attachment via the seat belt

The seat belt must be adjusted to ensure that it is effective in the event of harsh braking or an impact.
Ensure that the strap paths indicated by the child seat manufacturer are respected.
Always check that the seat belt is correctly fastened by pulling it up, then pulling it out fully whilst pressing on the child seat.
Check that the seat is correctly held by moving it from side to side and back to front: the seat should remain firmly fixed.
Check that the child seat has not been installed at an angle and that it is not resting against a window.

Do not use the child seat if it may unfasten the seat belt restraining it: the base of the seat must not rest on the buckle and/or catch of the seat belt.

Before using an ISOFIX child seat that you purchased for another vehicle, check that its installation is authorised. Consult the list of vehicles which can be fitted with the seat from the equipment manufacturer.

The seat belt must never be twisted or the tension relieved. Never pass the shoulder strap under the arm or behind the back.
Check that the seat belt has not been damaged by sharp edges.
If the seat belt does not operate normally, it will not protect the child. Consult an approved dealer. Do not use this seat until the seat belt has been repaired.

Attachment using the ISOFIX system

Authorised ISOFIX child seats are approved in accordance with regulation ECE-R44 in one of the three following cases:
– ISOFIXuniversal 3-point forward-facing seat;
– ISOFIXsemi-universal 2-point seat;
– specific.

For the latter two, check that your child seat can be installed by consulting the list of compatible vehicles.

Attach the child seat with the ISOFIX locks, if these are provided. The ISOFIX system allows quick, easy, safe fitting.

The ISOFIX system consists of 2 rings and, in some cases, a third ring.

No modifications may be made to the component parts of the restraint system (seat belts, ISOFIX and seats and their mountings) originally fitted.

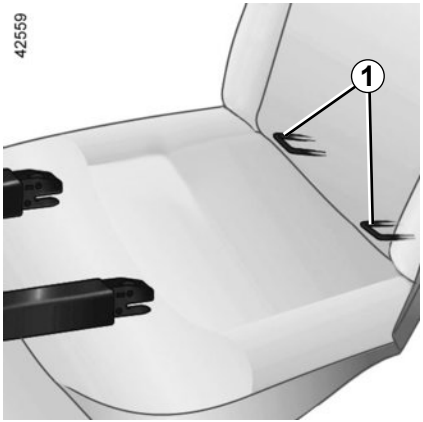

The two rings ***1*** are located between the seatback and the seat base of the seat and are identified by a marking.

The third ring ***2*** or ***4*** is used to attach the upper strap on some child seats.

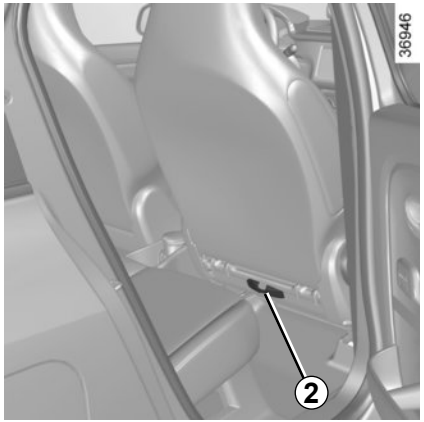

Rear seats

Remove the luggage compartment cover to pass the belt ***3*** between the seatback and the luggage compartment cover (refer to the information on the “Luggage compartment cover” in Section 3).

Fix the hook on the ring ***4***, identified by the symbol on the back of the seat in question and located under the boot carpet.

The ISOFIX anchorage points have been exclusively designed for child seats with the ISOFIX system. Never fit a different type of child seat, seat belt or other objects to these anchorage points.
Check that nothing is obstructing the anchorage points.

If your vehicle has been involved in a road accident, have the ISOFIX anchorage points checked and replace your child seat.

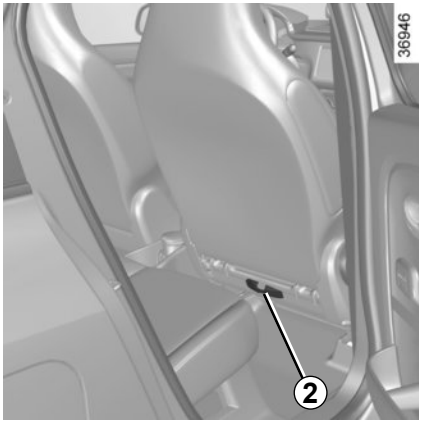

Front passenger seat (depending on the vehicle)

Attach the belt hook ***3*** to the ring ***2***.

All seats

Pull the belt ***3*** so that the back of the child seat comes into contact with the back of the vehicle seat.

Check that the seatback of the forward-facing child seat is in contact with the seatback of the vehicle seat. In this case, the child seat may not always rest on the seat base of the vehicle seat.

CHILD SAFETY: fitting a child seat, general information (1/2)

Some seats are not suitable for fitting child seats. The diagram on the following page shows you how to attach a child seat.

The types of child seat indicated may not be available. Before using a different child seat, check with the manufacturer that it can be fitted.

Ensure that the child seat or the child's feet do not prevent the front seat from locking correctly. Refer to the information on the "Front seat" in Section 1.
Check that when installing the child seat in the vehicle it is not at risk of coming loose from its base.
If you have to remove the headrest, check that it is correctly stored so that it does not come loose under harsh braking or impact.
Always attach the child seat to the vehicle even if it is not in use so that it does not come loose under harsh braking or impact.

In the front seat

The laws concerning children travelling in the front passenger seat differ in every country. Consult the legislation in force and follow the indications on the diagram on the following page.

Before fitting a child seat in this seat (if authorised):

– lower the seat belt as far as possible;

– move the seat as far back as possible;

– gently tilt the seatback away from vertical (approximately 25°);

– on equipped vehicles, raise the seat base as far as possible.

After installing the child seat, when this is possible, you can move the vehicle seat forward if necessary (so as to leave enough space in the rear seats for passengers or other child seats). For a rear-facing child seat, do not let it touch the dashboard or move it to the furthest forward position.

Do not change other settings after installing the child seat.

RISK OF DEATH OR SERIOUS INJURY: Before installing a child seat on the front passenger seat, check that the airbag has been deactivated (please refer to "Child safety: front passenger airbag deactivation and activation" in Section 1).

In the rear side seat

A carrycot can be installed across the vehicle and will take up at least two seats.
Position the child with their feet nearest the door.
Move the front seat as far forward as possible to install a rear-facing child seat, then move back the seat in front as far as it will go, although without allowing it to come into contact with the child seat.

For the safety of the child in the forward-facing seat, do not move the seat in front back past the middle of the runner, do not tilt the seatback too far (maximum of 25°) and raise the seat as much as possible.

In all situations, remove the rear headrests (refer to the information on the “Rear headrests” in Section 3). This must be done before fitting the child seat.

Check that the forward-facing child seat is resting against the back of the vehicle seat.

Fit the child seat in a rear seat wherever possible.

CHILD SAFETY: attachment by seat belt (1/2)

2-seater vehicle

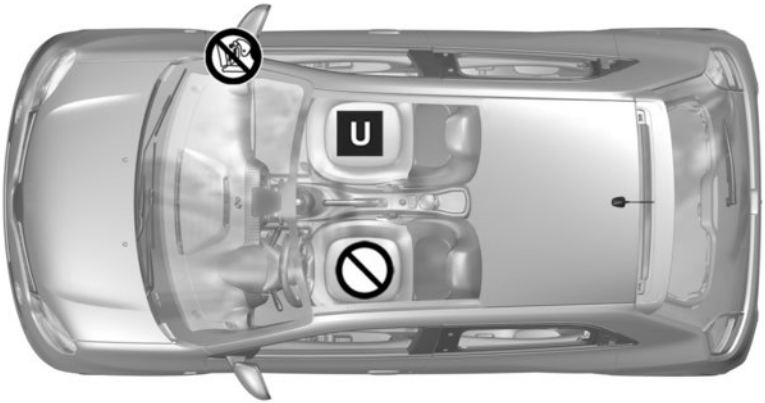

37004

4-seater vehicle

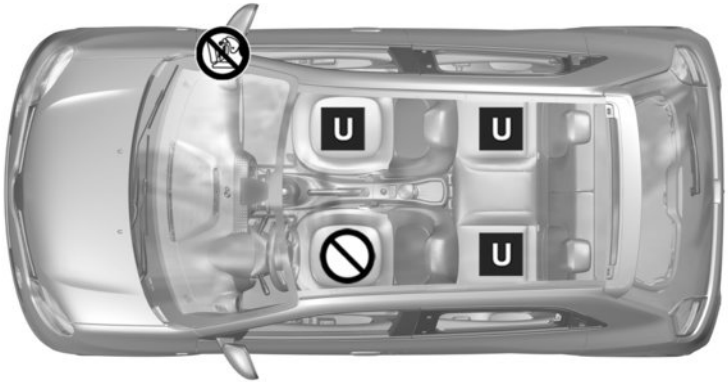

37002

Check the status of the air bag before fitting a child seat or allowing a passenger to use the seat.

Child seat attached using the belt

U Seat which allows a seat with "Universal" approval to be fitted using a seat belt;

Seat not suitable for fitting child seats.

Using a child safety system which is not approved for this vehicle will not correctly protect the baby or child. They risk serious or even fatal injury.

RISK OF DEATH OR SERIOUS INJURY: Before installing a child seat on the front passenger seat, check that the airbag has been deactivated (please refer to "Child safety: front passenger airbag deactivation and activation" in Section 1).

CHILD SAFETY: attachment by seat belt (2/2)

The table below summarises the information already shown on the diagram on the previous page, to ensure the regulations in force are respected.

2 and 4-seater vehicles: Child seat attached using the seat belt			
Type of child seat	**Weight of the child**	**Front passenger seat (1) (5)**	**Rear side seats**
Carrycot fitted across the vehicle Group 0	< 10 kg	X	U (2)
Rear-facing shell seat Group 0 and 0+	< 13 kg	U	U (3)
rear-facing seat Group 0+ and 1	< 13 kg and 9 to 18 kg	U	U (3)
Forward-facing seat Group 1	9 to 18 kg	U	U (4)
Booster seat Group 2 and 3	15 to 25 kg and 22 to 36 kg	U	U (4)

U = Seat which allows a child seat with “Universal” approval to be installed using a seat belt; check that it can be fitted.

(1) raise the seat to the maximum and position it as far back as possible, tilting the seatback slightly (approximately 25°).
(2) A carrycot can be installed across the vehicle and will take up at least two seats. Place the child with its feet nearest the door.
(3) Move the front seat as far forward as possible to install a rear-facing child seat, then move back the seat in front as far as it will go, although without allowing it to come into contact with the child seat.
(4) Forward-facing child seat; position the seatback of the child seat in contact with the seatback of the vehicle seat. In all situations, remove the rear headrest of the seat on which the child seat is positioned. This must be done before fitting the child seat (please refer to the section entitled “Rear headrests” in Section 3).

(5) RISK OF DEATH OR SERIOUS INJURY: before installing a child seat on the front passenger seat, check that the airbag has been deactivated (refer to “Child safety: front passenger airbag deactivation, activation” Section 1).

4-seater vehicle

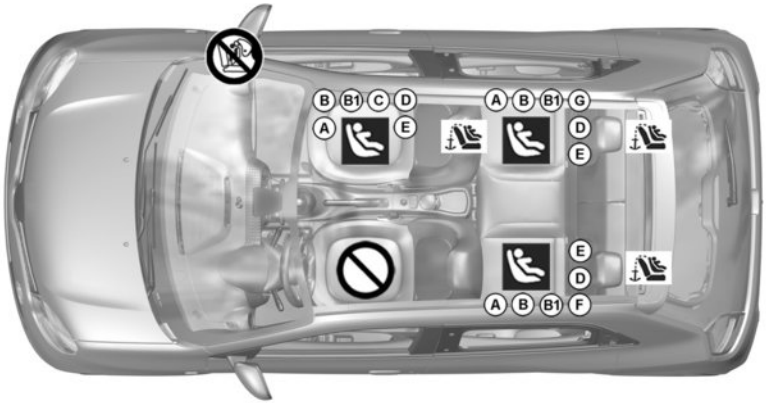

RISK OF DEATH OR SERIOUS INJURY: Before installing a child seat on the front passenger seat, check that the airbag has been deactivated (please refer to “Child safety: front passenger airbag deactivation and activation” in Section 1).

Check the status of the air bag before fitting a child seat or allowing a passenger to use the seat.

Seat which does not allow a child seat to be fitted.

Using a child safety system which is not approved for this vehicle will not correctly protect the baby or child. They risk serious or even fatal injury.

Child seat attached using the ISOFIX mounting

Seat which allows an ISOFIX child seat to be fitted.

The seats ISOFIX are fitted with an anchorage point which allows a forward-facing ISOFIX child seat with “Universal” approval to be attached. The anchorage points are located in the boot for the rear seats, and on the seatbacks for the front seats.

The size of the ISOFIX child seat is indicated by a letter:

– A, B and B1: for forward-facing seats in group 1 (9 to 18 kg);

– C and D: shell seat or rear-facing seats in group 0+ (less than 13 kg) or group 1 (9 to 18 kg);

– E: rear-facing shell seats in group 0 (less than 10 kg) or 0+ (less than 13 kg);

– F and G: carrycots in group 0 (less than 10 kg).

CHILD SAFETY: attachment using the ISOFIX system (2/3)

The table below summarises the information already shown on the diagram on the previous page, to ensure the regulations in force are respected.

4-seater vehicle: Fitting a child seat ISOFIX.				
Type of child seat	**Weight of the child**	**Seat size**	**Front passenger seat** (1) (2)	**Rear side seats**
Carrycot fitted across the vehicle Group 0	< 10 kg	F, G	X	IL (3)
Rear-facing shell seat Group 0 and 0+	< 13 kg	E	IL	IL (4)
rear-facing seat Group 0+ and 1	< 13 kg and 9 to 18 kg	C	IL	X
		D	IL	IL (4)
Forward-facing seat Group 1	9 to 18 kg	A, B, B1	IUF - IL	IUF - IL (5)
Booster seat Group 2 and 3	15 to 25 kg and 22 to 36 kg	-	X	X

(1) RISK OF DEATH OR SERIOUS INJURY: before installing a child seat on the front passenger seat, check that the airbag has been deactivated (refer to “Child safety: front passenger airbag deactivation, activation” Section 1).

CHILD SAFETY: attachment using the ISOFIX system (3/3)

X = Seat not suitable for fitting child seats ISOFIX.
IUF/IL = On equipped vehicles, seat which allows an approved “Universal”/“semi-universal” or “vehicle specific” child seat to be attached using the ISOFIX system; check that it can be fitted.

(2) raise the seat to the maximum and position it as far back as possible, tilting the seatback slightly (approximately 25°).
(3) A carrycot can be installed across the vehicle and will take up at least two seats. Place the child with its feet nearest the door.
(4) Move the front seat as far forward as possible to install a rear-facing child seat, then move back the seat in front as far as it will go, although without allowing it to come into contact with the child seat.
(5) Forward-facing child seat; position the seatback of the child seat in contact with the seatback of the vehicle seat. In all situations, remove the rear headrest of the seat on which the child seat is positioned. This must be done before fitting the child seat (please refer to the section entitled “Rear headrests” in Section 3).

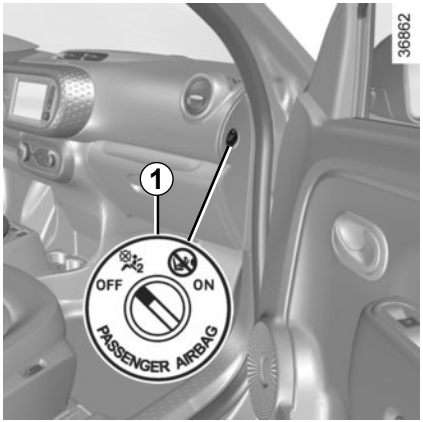

Deactivating the front passenger airbags
(on equipped vehicles)

Before fitting a child seat on the front passenger seat you **must** deactivate the passenger airbag.

To deactivate the airbags: with the vehicle stopped and the ignition off, push and turn lock ***1*** to the **OFF** position.

With the ignition on, you **must** check that the warning light on the display ***2*** is switched on.

This light remains permanently lit to let you know that you can fit a child seat.

The passenger airbag must only be deactivated or activated when the **vehicle is stationary**.
If it is interfered with when the vehicle is being driven, indicator lights and will come on.
Switch the ignition off then on again to reset the airbag in accordance with the lock position.

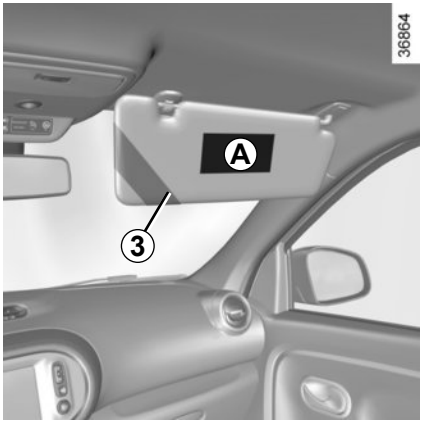

DANGER

Since operation of the front passenger airbag is not compatible with the position of a rear-facing child seat, **NEVER** fit a rear-facing child restraint system in a seat protected by an ACTIVATED front **AIRBAG**. This can lead to the **DEATH** of the **CHILD** or **SERIOUS INJURY**.

A

35770

The markings on the dashboard and labels ***A*** on each side of passenger sun blind ***3*** (example: label shown above) remind you of these instructions.

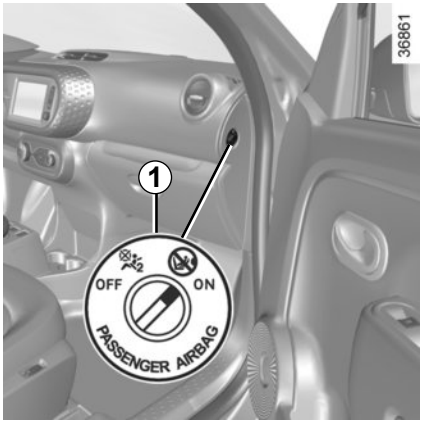

Activating the front passenger airbags

You should reactivate the airbags as soon as you remove the child seat from the front passenger seat to ensure the protection of the front passenger in the event of an impact.

To reactivate the airbags: with the vehicle stopped and the ignition off, push and turn lock ***1*** to the **ON** position.

With the ignition switched on, you **must** check that the warning light is out and that the warning light comes on the display ***2*** after each start-up for around 60 seconds.

The front passenger seat belt additional restraint systems are activated.

Operating faults

It is forbidden to fit a rear-facing child seat to the front passenger seat if the airbags activation/deactivation system is faulty.

Allowing any other passenger to sit in that seat is not recommended.

Contact your approved dealer as soon as possible.

The passenger airbag must only be deactivated or activated when the **vehicle is stationary**.

If it is interfered with when the vehicle is being driven, indicator lights and will come on.

Switch the ignition off then on again to reset the airbag in accordance with the lock position.

Interior rear view mirror

Its position can be adjusted. For night driving, to avoid being dazzled by the headlights of the car behind you, flip the small lever ***1*** located behind the rear view mirror.

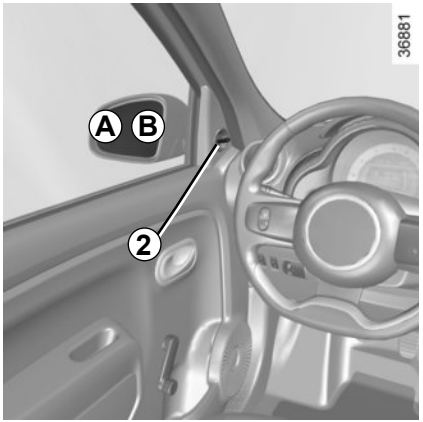

Door mirrors with manual adjustment

To adjust the door mirror, move switch ***2***.

For safety reasons, carry out any adjustments when the vehicle is not being driven.

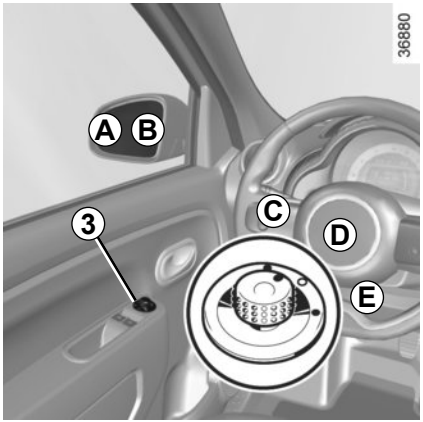

Door mirrors with electrical adjustment

With the ignition on, turn the button ***3***:

– position ***C*** to adjust the left-hand door mirror;
– position ***E*** to adjust the right-hand door mirror.

D is the inactive position.

Heated door mirrors

With the engine running, mirror de-icing is activated simultaneously with rear screen de-icing/demisting.

The driver's door mirror may have two clearly defined zones. Zone ***B*** shows what can normally be seen in an ordinary rear view mirror. Zone ***A*** increases rear side visibility.

Objects in the mirror are closer than they appear.

DRIVING POSITION: LEFT-HAND DRIVE (1/2)

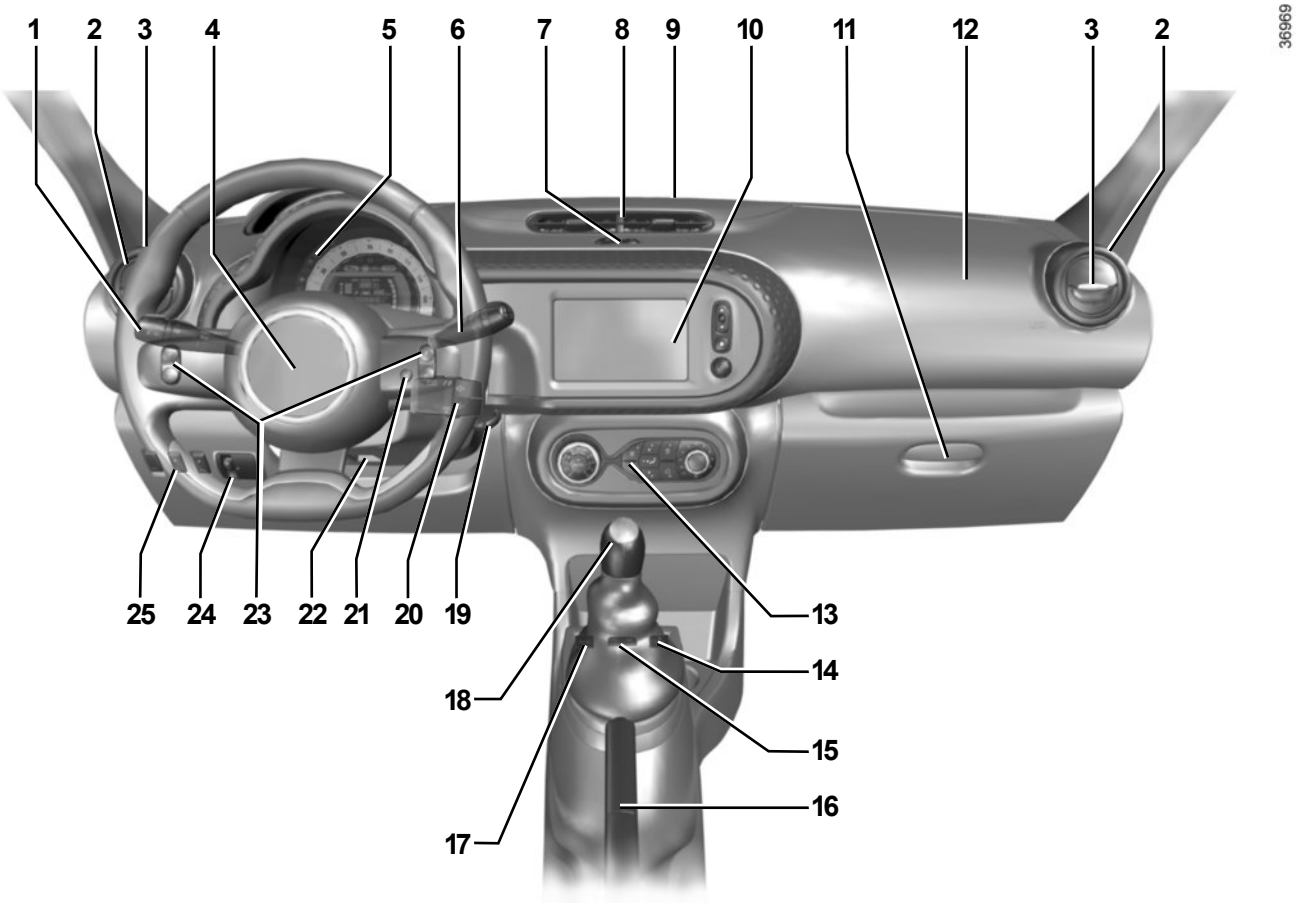

DRIVING POSITION: LEFT-HAND DRIVE (2/2)

The equipment fitted, described below, DEPENDS ON THE VERSION AND COUNTRY.

1 Stalk for:
- direction indicator lights;
- exterior lights;
- front fog lights;
- rear fog lights.

2 Side air vent.

3 Side window demister outlet.

4 Driver Airbag and horn location.

5 Instrument panel.

6 Stalk for:
- windscreen and rear screen wash/wipe;
- trip computer and warning system information readout.

7 Switch for:
- hazard warning lights;
- electric door locking.

8 Centre air vent.

9 Windscreen demister outlet.

10 Multimedia/radio touchscreen.

11 Glovebox.

12 Passenger Airbag location.

13 Heating or air conditioning controls.

14 Token holder.

15 Main switch for:
- speed limiter;
- cruise control.

16 Handbrake.

17 ECO mode switch.

18 Gear lever.

19 Ignition switch.

20 Radio and/or navigation system remote control.

21 Multimedia system voice control button.

22 Steering wheel adjustment control.

23 Cruise control/speed limiter control.

24 Headlight adjustment control.

25 Controls for:
- activation/deactivation of the parking distance control system;
- activation/deactivation of the Stop and Start function;
- activation/deactivation of the lane departure warning function.

DRIVING POSITION: RIGHT-HAND DRIVE (1/2)

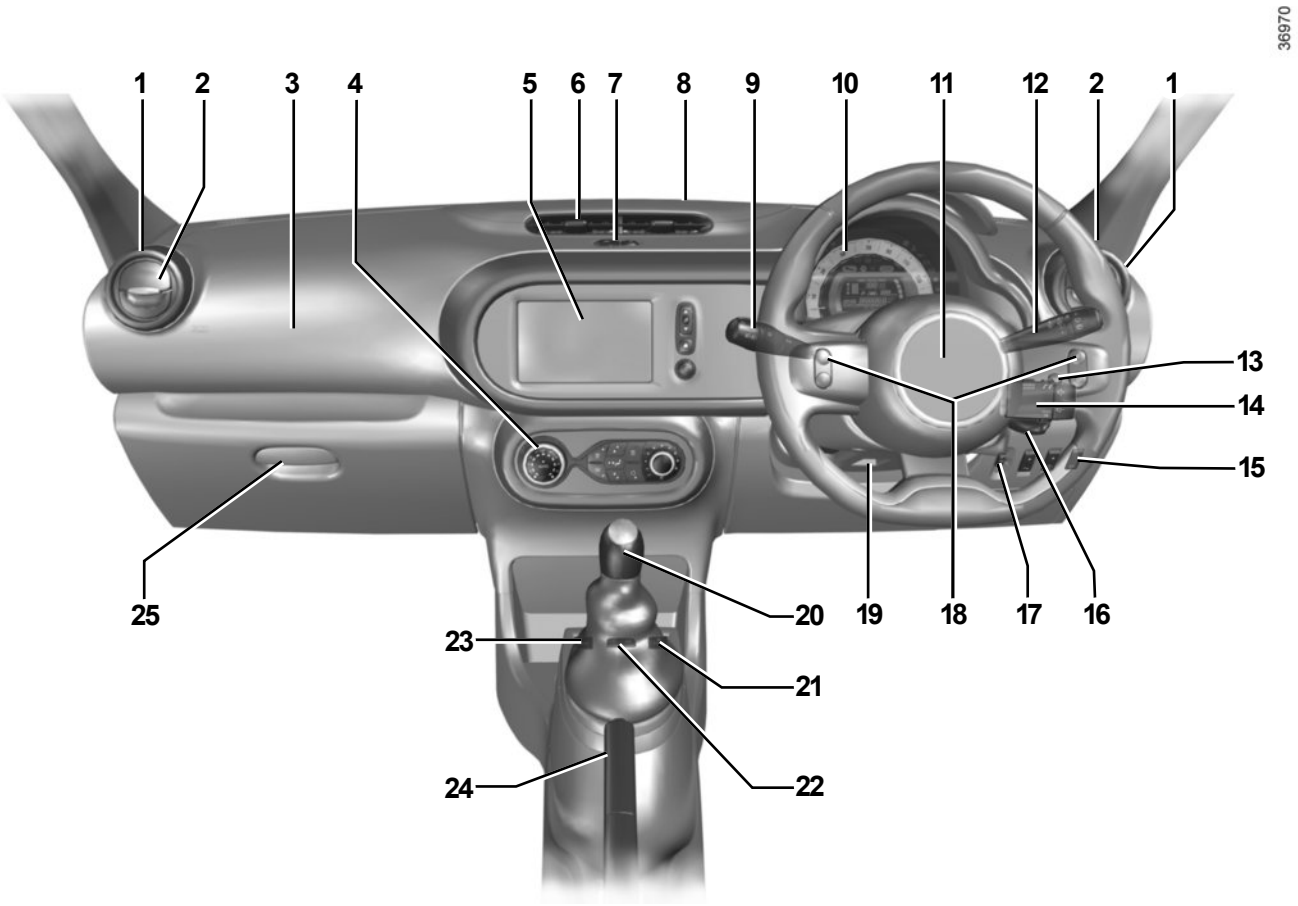

DRIVING POSITION: RIGHT-HAND DRIVE (2/2)

The equipment fitted, described below, DEPENDS ON THE VERSION AND COUNTRY.

1 Side window demister outlet.

2 Side air vent.

3 Passenger Airbag location.

4 Heating or air conditioning controls.

5 Multimedia/radio touchscreen.

6 Centre air vent.

7 Switch for:
- hazard warning lights;
- electric door locking.

8 Windscreen demister outlet.

9 Stalk:
- direction indicator lights;
- exterior lights;
- front fog lights;
- rear fog lights.

10 Instrument panel.

11 Driver Airbag and horn location.

12 Stalk for:
- windscreen and rear screen wash/wipe;
- trip computer and warning system information readout.

13 Multimedia system voice control button.

14 Radio and/or navigation system remote control.

15 Controls for:
- activation/deactivation of the parking distance control system;
- activation/deactivation of the Stop and Start function;
- activation/deactivation of the lane departure warning function.

16 Ignition switch.

17 Headlight adjustment control.

18 Cruise control/speed limiter controls.

19 Steering wheel adjustment control.

20 Gear lever.

21 Token holder.

22 Main switch for:
- speed limiter;
- cruise control.

23 ECO mode switch.

24 Handbrake.

25 Glovebox.

WARNING LIGHTS (1/5)

The display of information shown below DEPENDS ON THE VEHICLE EQUIPMENT AND COUNTRY.

Instrument panel *A*: lights up when the ignition is switched on.

With the lights on, you can adjust the brightness by turning the knob ***1***.

Warning light means you should drive **very carefully to an authorised dealer as soon as possible**. Failure to follow this recommendation risks damaging your vehicle.

Side light warning light

Main beam headlight tell-tale

Dipped beam headlight tell-tale

Front fog light tell-tale

Rear fog light telltale

Left-hand direction indicator tell-tale

Right-hand direction indicator tell-tale

If no lights or sounds are apparent, this indicates a fault in the instrument panel. This indicates that it is essential to stop immediately (as soon as traffic conditions allow). Ensure that the vehicle is correctly immobilised and contact an approved Dealer.

Airbag warning light

This lights up when the ignition is switched on and goes out after a few seconds.

If it does not come on when the ignition is switched on, or comes on when the engine is running, there is a fault in the system.

Contact your approved Dealer as soon as possible.

Low fuel level warning light

This lights up when the ignition is switched on, alongside a beep, and goes out after a few seconds.

If it comes on when driving and is accompanied by a beep, fill up with fuel as soon as possible. There is only approximately 30 miles (50 km) worth of fuel left.

Warning light STOP requires you to stop immediately, for your own safety, as soon as traffic conditions allow. Switch off the engine and do not restart it. Contact an approved Dealer.

WARNING LIGHTS (2/5)

The display of information shown below DEPENDS ON THE VEHICLE EQUIPMENT AND COUNTRY.

STOP light

This lights up when the ignition is switched on and goes out as soon as the engine is started. It lights up at the same time as other warning lights, and is accompanied by a beep.

It requires you to stop immediately, for your own safety, as soon as traffic conditions allow. Switch off the engine and do not restart it.

Contact an approved Dealer.

Handbrake on and brake circuit incident warning light

This comes on when the ignition is switched on and goes out as soon as the handbrake is released.
If it comes on during braking and is accompanied by the STOP warning light and a beep, it indicates that the fluid level in the circuit is low or that there is a braking system fault.
Stop as soon as traffic conditions allow and contact an approved Dealer.

Battery charge warning light

This lights up when the ignition is switched on and goes out after a few seconds.

If it comes on on the road, accompanied by the STOP warning light and a beep, this indicates an overload or discharge in the electrical circuit.

Stop as soon as traffic conditions allow and contact an approved Dealer.

Oil pressure warning light

This lights up when the ignition is switched on and goes out after a few seconds.

If it comes on on the road, accompanied by the STOP warning light and a beep, stop immediately and cut the ignition.

Check the oil level. If the level is normal, the indicator light is being lit by something else. Contact an approved Dealer.

Warning light

This lights up when the ignition is switched on and goes out as soon as the engine is started. It may light up in conjunction with other warning lights.
You should drive **very carefully** to an authorised dealer as soon as possible. Failure to follow this recommendation risks damaging your vehicle.

The display of information shown below DEPENDS ON THE VEHICLE EQUIPMENT AND COUNTRY.

Toxic Fume Filter System Warning Light

On vehicles which are equipped with it, this light comes on when the engine is started and, depending on the vehicle, when the ignition is switched off if the vehicle is in the engine standby phase (refer to the information on the 'Stop and Start Function' in section 2) then goes out.

– If it lights up continuously, consult an authorised dealer as soon as possible;

– If it flashes, reduce the engine speed until the light stops flashing. Contact an approved dealer as soon as possible.

Please refer to the information on “Maintenance and anti-pollution advice” in Section 2.

Warning light for electronic stability program (ESC) and traction control system

This lights up when the ignition is switched on and goes out after a few seconds.

There are several reasons for the warning light to come on: please refer to the information on “Dynamic driving control: ESC” and “Traction control” in Section 2.

Lane departure system warning light

Please refer to the information on “Lane departure warning” in Section 2.

Speed limiter and cruise control indicator lights

See the information on the “Speed limiter” and “Cruise control” in Section 2.

Anti-lock braking warning light

This lights up when the ignition is switched on and goes out after a few seconds.
If it lights up when you are driving, it indicates a fault in the anti-lock braking system.
Braking will then be as normal, without the ABS. Contact an approved Dealer as soon as possible.

Coolant temperature warning light

This comes on when the ignition is switched on.

If it turns red, stop and let the engine idle for a minute or two.

The temperature should lower and the warning light should return to a blue colour. If not, stop the engine. Let the engine cool down before checking the coolant.

Contact an approved Dealer.

WARNING LIGHTS (4/5)

The display of information shown below DEPENDS ON THE VEHICLE EQUIPMENT AND COUNTRY.

Door(s) open warning light

Engine standby warning light

Please see information about “Stop and Start function” in Section 2.

Unavailability of engine standby warning light

Please see information in the paragraph on “Stop and Start Function” in Section 2.

Mode warning light ECO

This comes on when ECO mode is activated.
Please refer to the information on “Driving advice, Eco-driving” in Section 2.

Electronic fault warning light

This lights up when the ignition is switched on and goes out after a few seconds.
If it comes on when driving, this indicates a fault in the injection computer.
Contact your approved Dealer as soon as possible.

Gear change indicator.

This lights up to advise you to change to a higher gear (up arrow) or lower gear (down arrow).

Tyre pressure loss warning

Please refer to the information on the “Tyre pressure loss warning” in Section 2.

Variable power-assisted steering warning light

This comes on when the ignition is switched on and goes out after a few seconds.

If it lights up when you are driving, this indicates a fault in the system. Consult an approved Dealer as soon as possible.

WARNING LIGHTS (5/5)

The display of information shown below DEPENDS ON THE VEHICLE EQUIPMENT AND THE COUNTRY.

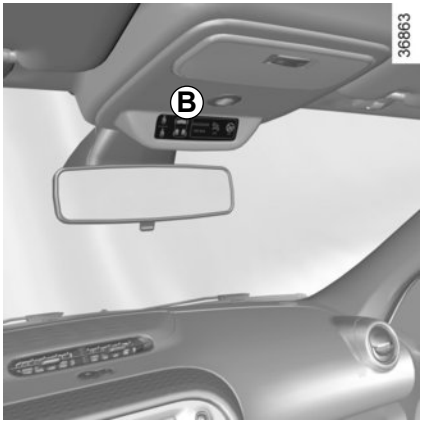

Central display *B*: lights up when the ignition is switched on.

Seat belt reminder warning lights

Please see the information on “Seat belts” in Section 1.

Front passenger airbag deactivated warning light

Please see the information on “Seat belts” in Section 1.

Front passenger airbag activated warning light

Please see the information on “Seat belts” in Section 1.

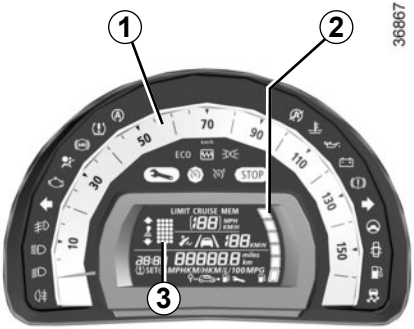

Speedometer *1*

(km or miles per hour)

Overspeed buzzer

Depending on the vehicle, a warning beep sounds for approximately 10 seconds every 30 seconds, as long as the vehicle is travelling in excess of 75 mph (120 km/h).

Fuel level gauge *2*

Automatic gearbox display *3*

This indicates the gear engaged (depending on the vehicle). Refer to the information on the “Automatic gearbox” in Section 2.

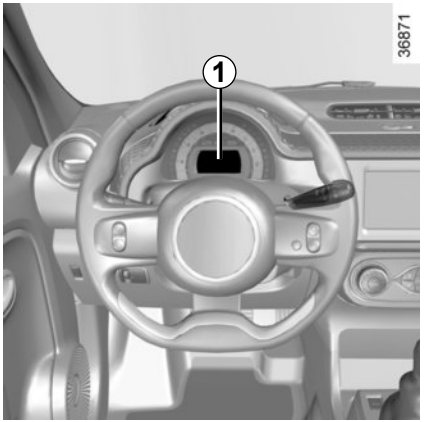

On-board computer *1*

It includes the following functions:

– distance travelled;
– journey settings;

All these functions are described on the following pages.

Display selection keys *2* and *3*

Scroll through the following information upwards (key ***2***) or downwards (key ***3***) by pressing briefly and successively (the display depends on the vehicle equipment and country).

a) total mileage recorder;

b) trip mileage recorder;
c) fuel used;
d) average fuel consumption;
e) Current fuel consumption;
f) estimated range;
g) distance travelled since the last reset;
h) average speed;
i) mileage before next service/oil change;
j) Reset the tyre pressure
k) cruise control/speed limiter programmed speed;
l) time;
m) temperature.

Resetting the trip mileage

With “trip mileage recorder” selected on the display, press button ***2*** or ***3*** until the mileage recorder resets to zero.

Resetting the journey parameters (reset button)

With one of the trip parameters selected as the display, press and hold button ***2*** or ***3*** until the display resets.

Interpreting some of the values displayed after resetting

The values showing average fuel consumption, range and average speed will become more stable and reliable the further you travel after pressing the reset button.

For the first few miles after pressing the reset key you will notice that the range increases as you travel. This range takes into account the average fuel consumption since the last time the reset button was pressed. Therefore, the average fuel consumption may decrease when:

– the vehicle stops accelerating;

– the engine reaches its operating temperature (if the engine was cold when the reset key was pressed);

– when driving from an urban area onto the open road.

Automatic resetting of the journey parameters

Resetting occurs automatically when the maximum value of any of the parameters is exceeded.

ON-BOARD COMPUTER: trip settings (1/4)

The display of information shown below DEPENDS ON THE VEHICLE EQUIPMENT AND COUNTRY.

Examples of selections	Interpreting the display selected
101778 km	**a) Total mileage recorder.**
112.4 km	**b) Trip mileage recorder.**
5.8 L/100	**c) Trip settings.** **Fuel used.** Fuel consumed since the last reset.
5.8 L/100	**d) Average fuel consumption** since the last reset. The value is displayed after having travelled at least 400 metres since the last reset.

ON-BOARD COMPUTER: trip settings (2/4)

The display of information shown below DEPENDS ON THE VEHICLE EQUIPMENT AND COUNTRY.

Examples of selections	Interpreting the display selected
7.4 L/100	**e) Current fuel consumption.** This value is displayed after a speed of approximately 20 mph (30 km/h) is reached.
541 km	**f) Estimated range with remaining fuel.** The value is displayed after driving 400 metres.
522 km	**g) Distance travelled** since last reset.
123.4 km/H	**h) Average speed** since the last reset. The value is displayed after driving 400 metres.

ON-BOARD COMPUTER: trip settings (3/4)

The display of information shown below DEPENDS ON THE VEHICLE EQUIPMENT AND COUNTRY.

Examples of selections		Interpreting the display selected
		i) Mileage before service or oil change. Distance remaining until the next service (displayed in miles (kilometres) or days), then when the service nears, the warning light is displayed on the instrument panel. The vehicle requires a service as soon as possible.

Resetting: To reset the mileage before the next service/oil change, press and hold button ***2*** or ***3*** for approximately 10 seconds until the display shows the mileage before service/oil change without flashing.

ON-BOARD COMPUTER: trip settings (4/4)

The display of information shown below DEPENDS ON THE VEHICLE EQUIPMENT AND COUNTRY.

Examples of selections	Interpreting the display selected
SET	**j) Reset the tyre pressure.** Please refer to the information on the “Tyre pressure loss warning” in Section 2.
90 km/H	**k) Cruise control and speed limiter programmed speed.** Refer to the information on the “Speed limiter” and “Cruise control” in Section 2.
16:30	**l) Time.** Please refer to the information on the “Clock and exterior temperature” in Section 1.

Display *A*

To access the display ***2*** for setting the time, press button ***3*** or ***4*** on the stalk ***1***.

Wait a few seconds; the hours and minutes will begin to flash. You are now in setting mode, press and hold button ***3*** or ***4*** to set the hour.

Once the minutes flash, repeatedly press or press and hold button ***3*** ou ***4*** to set the time.

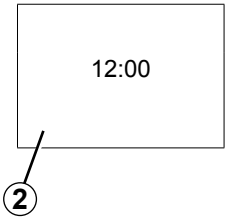

Wait a few seconds, the minutes will flash: repeatedly press or press and hold button ***3*** or ***4*** to set the time.

When setting is complete, the hours and minutes remain displayed continuously for 5 seconds: your setting is registered.

You may change the display.

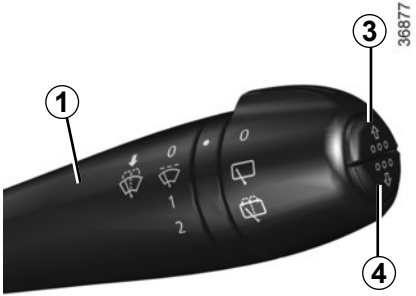

If the power supply is cut (battery disconnected, supply wire cut, etc.), the clock must be reset.

We recommend that you do not adjust these settings while driving.

Display *B*

Vehicles fitted with touch-screen multimedia, navigation aid systems, telephones, etc.

Refer to the separate instructions for the function to understand the special features of this equipment.

External temperature indicator

Special note:

When the exterior temperature is - 3°C to + 3°C, the °C characters flash (signalling a risk of ice on the road).

External temperature indicator

As ice formation is related to climatic exposure, local air humidity and temperature, the external temperature alone is not sufficient to detect ice.

If the power supply is cut (battery disconnected, supply wire cut, etc.), the clock must be reset.

We recommend that you do not adjust these settings while driving.

Side lights

Turn the ring ***2*** until the symbol is opposite mark ***3***.

An indicator light on the instrument panel will come on.

Daytime running lights function

(front lights only)

If fitted to the vehicle, the daytime running lights come on automatically when the engine is started or, depending on the vehicle, when the ignition is switched on.

Dipped beam headlights

Manual operation

Turn the ring ***2*** until the symbol is opposite mark ***3***. This indicator light on the instrument panel comes on.

Automatic operation
(depending on vehicle)

Turn ring ***2*** until the AUTO symbol is opposite mark ***3***: with the engine running, the dipped beam headlights switch on or off automatically depending on the brightness of the light outside, without any action on stalk ***1***.

Before driving at night, check that the electrical equipment is operating correctly and adjust the headlight beams (if your vehicle is not carrying its normal load). As a general precaution, check that the lights are not obscured (by dirt, mud, snow or objects being transported).

When driving on the left in a left-hand drive vehicle (or vice versa), drivers must re-adjust their lights throughout their stay (see “Adjusting headlight beams” in Section 1).

Main beam headlights

With the engine running and the dipped beam headlights on, push stalk ***1***. This indicator light on the instrument panel comes on.
To return to the dipped headlight position, pull stalk ***1*** towards you again.

Switching off the lights

There are two possibilities:
– manually, move ring ***2*** to position **0**;
– automatically, if the ring ***2*** is in AUTO position and if the main beam headlights are not switched on. The lights will go out automatically when the engine is switched off, the driver's door is opened or the vehicle is locked. In this case, the next time the engine is started, the lights will be switched back on according to the position of the ring ***2***, taking into account the exterior light level, without moving the stalk ***1***.

Lights-on reminder buzzer

A warning beep sounds when the driver's door is opened to warn you that the lights are still on.

Front fog lights

Turn the centre ring ***4*** on the stalk ***1*** until the symbol is opposite mark ***3***, then release it.

Operation of the fog lights depends on the exterior lighting position selected, and an indicator light will light up on the instrument panel.

Cornering lights function

Whenever the dipped beam headlights are on and under certain conditions (at speed, the steering wheel at an angle, in forward gear, the indicator lights on, etc.), when taking a corner one of the front fog lights will come on to light the inside of the bend.

Rear fog light

Turn the centre ring ***4*** on the stalk until the symbol is opposite mark ***3***, then release it.

Depending on the vehicle, the stalk returns to the initial position or stays in position.

Operation of the fog lights depends on the exterior lighting selected, and an indicator light will light up on the instrument panel.

To avoid inconveniencing other road users, remember to switch off the rear fog light when it is no longer needed.

Turning off the fog lights

There are two possibilities:

– manually, depending on the vehicle, turn the ring ***4*** again to bring the mark ***3*** opposite the symbol for the fog light that you want to switch off, or bring the ring ***4*** into position **0**. The corresponding indicator light will go out on the instrument panel;
– the lights will go out automatically when the engine is switched off or the vehicle is locked, and the fog lights when the driver's door is opened.

The front and rear fog lights switch off when the exterior lights are switched off.

When driving in fog or snow, or when transporting objects which are higher than the roof, the headlights do not come on automatically.

Switching on the fog lights remains the responsibility of the driver: the indicator lights on the instrument panel inform you whether the fog lights are lit (indicator light on) or not (indicator light not on).

Horn

Press steering wheel boss ***A***.

Headlight flasher

Pull stalk ***1*** towards you to flash the headlights.

Direction indicators

Move stalk ***1*** parallel to the steering wheel and in the direction you are going to turn it.

One-touch mode

When driving, it is possible that the steering wheel may not be turned sufficiently to return the stalk automatically to its starting position.
In this case, move the stick ***1*** to halfway, then release it: it will return to its initial position and the indicator light flashes three times.

Hazard warning lights

Press switch ***2***.
This switch activates all four direction indicators and the side indicator lights simultaneously. It must only be used in an emergency to warn drivers of other vehicles that you have had to stop in an area where stopping is prohibited or unexpected, or that you are obliged to drive under special conditions.
Depending on the vehicle, the hazard warning lights may come on automatically under heavy deceleration. You can switch them off by pressing switch ***2*** once.

HEADLIGHT BEAM ADJUSTMENT (1/2)

On vehicles fitted with this function, control ***A*** allows you to adjust the height of the beams according to the load.

Turn control ***A*** downwards to lower the headlights and upwards to raise them.

Examples of positions for adjusting control *A* according to the load	
0	**Driver alone or with front passenger**
1	**All seats occupied**
2	**All seats occupied and the boot laden**
3	**Driver only with the boot laden**

HEADLIGHT BEAM ADJUSTMENT (2/2)

When driving on the left in a left-hand drive vehicle (or vice versa), you must adjust your lights **temporarily** for the duration of your trip.

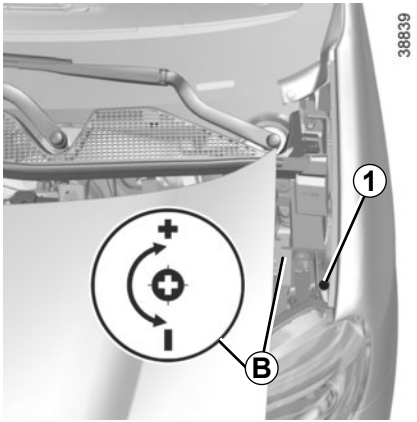

Temporary adjustment

Open the bonnet (please refer to the information on the “Bonnet” in Section 4) and slide it sideways to access the screw ***1*** and marking ***B***.

Note: Take care not to scratch the vehicle paintwork.

For each headlight, using a screwdriver, turn the screw ***1*** by a quarter turn towards the - symbol to lower the beams.

Return to the starting point once your trip is over: turn the screw ***1*** by a quarter turn towards the + symbol to raise the beams.

Once the adjustment has been done, make sure the bonnet is repositioned and closed properly.

For your safety, do not remove the bonnet holding straps. Risk of the bonnet falling on the road surface.

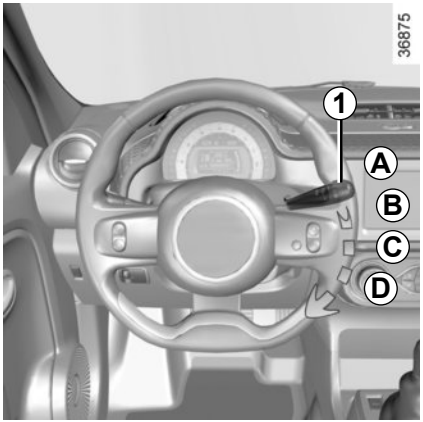

With the ignition on, move stalk ***1***

- ***A* park.**
- ***B* intermittent wiping.**
  Depending on the vehicle, the wipers may stop for a few seconds between wipes. It is possible to change the time between sweeps by turning ring ***2***.
- ***C* normal wiping speed.**
- ***D* fast wiping speed.**

Positions ***B***, ***C*** and ***D*** are accessible with the ignition on.

Vehicles with automatic wiper function

With the engine running, move stalk ***1***

- ***A* park.**
- ***B* automatic wiper function**
  When this position is selected, the system detects water on the windscreen and triggers the wipers at a suitable wiping speed:
  – ***E***: minimum sensitivity
  – ***F***: maximum sensitivity
  NB: in foggy weather or during snowfalls, the wiping is not automatically triggered and remains under the driver's control.
- ***C* normal wiping speed.**
- ***D* fast wiping speed.**

Position ***C*** is accessible with the ignition on. Positions ***B*** and ***D*** are accessible only with the engine running.

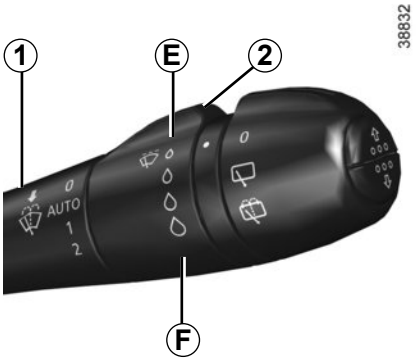

Special note

When driving, the wiping speed slows down whenever the vehicle stops. For example: the speed will change from a fast wiping speed to normal wiping speed.
As soon as the vehicle moves off, wiping will return to the speed originally selected.
Any action on stalk ***1*** overrides and cancels automatic operation.

Starting the vehicle with the stalk in position ***D*** triggers a slow continuous sweeping movement. Adjusting the stalk to position ***D*** is necessary to trigger a rapid continuous sweeping movement.

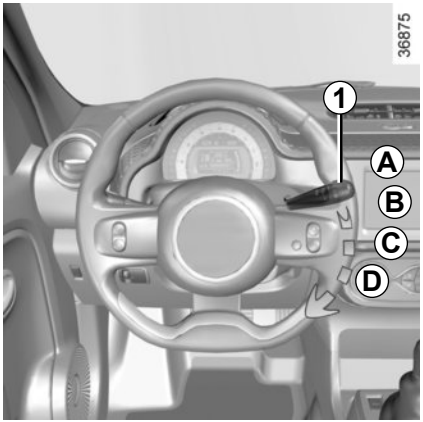

Windscreen washer

With the ignition on, pull stalk ***1*** towards you.

A brief pull will trigger a single sweep of the wipers, in addition to the windscreen washer.

A longer pull triggers, as well as the windscreen washer, continuous sweeping until the end of the request, then three return sweeps, then after a few seconds, a fourth.

Do not try to lift the wiper blades. They cannot remain detached from the windscreen. To replace the blades, refer to Section 5: “Wiper blades”.

When working in the engine compartment, ensure that the windscreen wiper stalk is in position ***A*** (park).

Risk of injury.

Before any action involving the windscreen (washing the vehicle, de-icing, cleaning the windscreen, etc.) return stalk ***1*** to position ***A*** (park).

Risk of injury and/or damage.

Efficiency of a wiper blade

Check the condition of the wiper blades. How long they last depends on you:

– it must remain clean: clean the blade and the screen regularly with soapy water;
– do not use it when the screen is dry;
– free it from the screen when it has not been used for a long time.

In all cases, replace it as soon as it begins to lose efficiency: approximately once a year. Refer to the paragraph on “Wiper blades” in Section 5.

Precaution for using the wipers

– In freezing or snowy weather conditions, clear the screen before starting the wipers (risk of motor overheating);
– ensure that no objects are obstructing the travel of the blade.

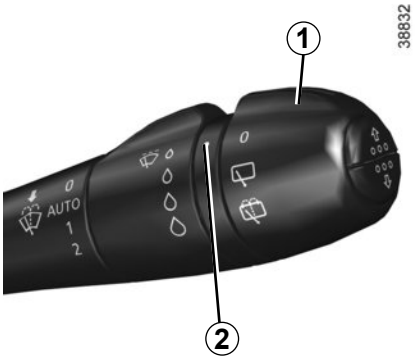

Speed-dependent timed rear screen wiper

With the ignition on, turn the end of the stalk ***1*** to align the mark ***2*** with the symbol.
Wiping frequency varies with speed.

Rear windscreen wash/ wiper

With ignition on, turn the end of the stalk ***1*** to bring the mark ***2*** in line with the symbol. When the stalk is released, it returns to the rear wipe position.
A short pull triggers the rear windscreen wipers.
A prolonged action triggers, in addition to the rear windscreen wipers, a continuous sweep until the stalk is released, then two return wipes followed by a third, after a few seconds.

Special note

If the windscreen wipers are operating or are in automatic mode, the rear screen wiper wipes intermittently when reverse gear is engaged.
Depending on the vehicle, you may be able to deactivate this function via the multimedia screen. Please see the equipment instructions for further information.

Before any action on the windscreen (washing the vehicle, de-icing, cleaning the windscreen, etc.), return the stalk ***1*** to the park position.

Risk of injury or damage.

Efficiency of a wiper blade

Check the condition of the wiper blades. How long they last depends on you:

– it must remain clean: clean the blade and the screen regularly with soapy water;
– do not use it when the screen is dry;
– free it from the screen when it has not been used for a long time.

In all cases, replace it as soon as it begins to lose efficiency: approximately once a year. Refer to the paragraph on “Wiper blades” in Section 5.

Precaution for using the wipers

– In freezing or snowy weather conditions, clear the screen before starting the wipers (risk of motor overheating);
– ensure that no objects are obstructing the travel of the blade.

Do not use the wiper arm to open or close the tailgate.

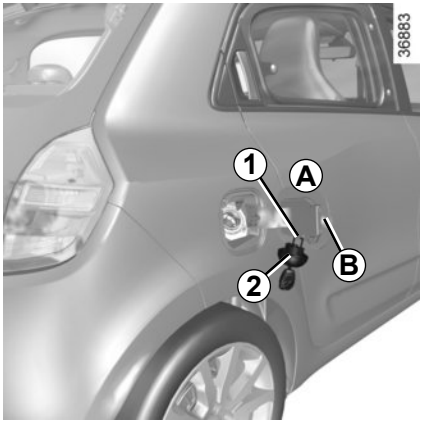

Useful capacity of fuel tank:

approximately **28 litres** or **35 litres**, depending on the vehicle.

To open cover ***A***, place your finger into recess ***B***.
When filling, use the cap holder ***1*** on the cover ***A*** to secure the cap ***2***.

Fuel grade

Use a high-grade fuel that complies with the legislation in force in each country and which **must** comply with the specifications given on the label on the cover ***A***. Refer to the information on “Engine specifications” in Section 6.

Fuel filler cap: this is specific.

If you have to replace it, make sure it is identical to the original cap. Contact an approved Dealer.
Never place the cap near a source of heat or flame.

Do not wash the filler area with a high-pressure washer.

Petrol version

It is **essential** to use unleaded petrol. The octane rating (RON) must comply with the information given on the label on the cover ***A***. Please refer to the information on «Engine specifications» in Section 6.

Fuel types that conform to European standards with which the engines of vehicles sold in Europe are compatible: refer to the “Engine specifications” in section 6.

After filling, check that the cap and cover are closed.

Do not use ethanol-based fuel if your vehicle is not compatible with this fuel.
Do not add additive to the fuel –otherwise you risk damaging the engine.

Filling with fuel

With the ignition off, insert the nozzle and insert it **fully** before turning it on to fill the fuel tank (risk of splashing).

Keep the nozzle in this position throughout the entire filling operation.
When the pump cuts out automatically at the end of the filling procedure, a maximum of two further filling attempts may be made, as there must be sufficient space in the fuel tank to allow for expansion.
Make sure that no water enters the fuel tank during filling. The cover ***A*** and its surround must remain clean.

Petrol versions
Using leaded petrol will damage the antipollution system and may lead to a loss of warranty.
To ensure that the fuel tank is not filled with leaded petrol, the fuel tank filler neck contains a restrictor fitted with a foolproof system which **only allows the nozzle for unleaded petrol to be used** (at the pump).

Vehicle fitted with the Stop and Start function

To fill up with fuel, the engine must be stopped (and not on standby): stop the engine (please refer to the information on “Starting and stopping the engine” in Section 2).

No modifications whatsoever are permitted on any part of the fuel supply system (electronic units, wiring, fuel circuit, injectors, protective covers, etc.) as this may be dangerous (unless undertaken by qualified Network personnel).

Persistent fuel odour

If you notice a persistent fuel odour you should:

– stop the vehicle as soon as traffic conditions allow and switch off the ignition;

– switch on the hazard warning lights and ask your passengers to leave the vehicle and stay clear of the traffic;

– contact an approved Dealer.

Section 2: Driving

(Advice on use relating to fuel economy and the environment)

Running in 2.2
Starting, stopping the engine. 2.3
Standing start procedure 2.4
Stop and start function. 2.5
Special features of petrol versions 2.9
Gear lever/Handbrake 2.10
Driving advice, Eco-driving 2.11
Maintenance and antipollution advice 2.15
Environment 2.16
Tyre pressure loss warning 2.22
Driver correction devices/aids 2.26
Lane departure warning. 2.30
Speed limiter 2.32
Cruise control 2.35
Parking distance control 2.39
Reversing camera 2.41
Automatic gearbox. 2.43

Running in

Petrol version

For the first **600 miles** (1,000 km), do not exceed 78 mph (130 km/h) in the highest gear, or 3,000 to 3,500 rpm.

You may only expect top performance from your vehicle after approximately **1,800 miles (3,000 km)**.

Service intervals: refer to the Maintenance Document for your vehicle.

“Stop and steering lock” position St

To lock: remove the key and turn the steering wheel until the steering column locks.

To unlock: turn the key and the steering wheel slightly.

“Accessories” position A

When the ignition is switched off, any accessories (radio, etc.) will continue to function.

“On” position M

The ignition is switched on:

Start position D

If the engine fails to start at the first attempt, the key must be turned back before the starter can be activated again. Release the key as soon as the engine starts.

vehicles fitted with an automatic gearbox

Before starting, move the lever to position **P**.

Starting the engine

Engine warm or cold

– Turn the key to the start position **without depressing the accelerator.**

– release the key as soon as the engine starts.

Special note: when starting the engine in very low exterior temperatures (below -10°C) hold down the clutch pedal until the engine starts.

Stopping the engine

With the engine idling, turn the key back to the Stop position.

Never switch off the ignition before the vehicle has stopped completely. Once the engine has stopped, the brake servo, power-assisted steering, etc. and the passive safety devices such as airbags and pretensioners will no longer operate.

Driver's responsibility when parking or stopping the vehicle

Never leave an animal, child or adult who is not self-sufficient alone in your vehicle, even for a short time.

They may pose a risk to themselves or to others by starting the engine, activating equipment such as the electric windows or locking the doors, for example.

Also, in hot and/or sunny weather, please remember that the temperature inside the passenger compartment increases very quickly.

RISK OF DEATH OR SERIOUS INJURY.

STANDING START PROCEDURE

If fitted on the vehicle, with the vehicle stationary, the standing start procedure (Launch Control) is a function which permits maximum acceleration.

Note: This function should only be used when the mechanical components have reached their operating temperature.

Heavy use of the system will reduce the service life of the mechanical components (clutch, transmission, etc.).

Because of the acceleration gained, this function should only be used if traffic conditions permit, and in compliance with the local driving regulations. Please ensure all the conditions are met before each use.

Risk of accident or serious injury.

Activating the system

The system is activated by:

– with the engine running, the vehicle stationary and the gear lever in position D;

– depress the brake pedal with the left foot;

– with your left foot still pressing the brake pedal, press the accelerator pedal fully to beyond the point of resistance with your right foot (the engine speed will automatically stabilise);

– within 3 seconds, release the brake pedal for a sporty vehicle start.

Use of this function accelerates wear on the tyres. Please see the information on “Tyres” in Section 5.

Do not use this function on slippery or wet roads.

Risk of loss of control of the vehicle.

Conditions for non-activation of the system

Certain conditions will not enable the system to be activated:

– three successive authorised standing start procedures – beyond this, the function will be disabled for approximately 10 minutes;

– excessive road gradient percentage;

– fault in the vehicle system (ESC, etc.).

FUNCTION STOP AND START (1/4)

This system enables a reduced fuel consumption and lower greenhouse gas emissions. The system is activated automatically when the vehicle is started. While driving, the system stops the engine (standby) when the vehicle is at a standstill (traffic jam, traffic lights, etc).

If the engine stalls while the system is in operation, pressing the clutch pedal right down will start it again.

Keep your vehicle stationary when the engine is on standby (shown by the warning light on the instrument panel).

Conditions for engine standby

The vehicle has set off from where it was parked;

For vehicles equipped with automatic gearboxes:

– Gearbox is in position **D**, **M** or **N**;
and
– the brake pedal is depressed (sufficiently hard);
and
– the accelerator pedal is not depressed;
and
– the speed is zero for around 1 second.

The engine remains on standby if position **P** is selected, or if position **N** is selected with the handbrake engaged and the brake pedal released.

The ignition must be switched off before leaving the vehicle (please see the information on “Starting, stopping the engine” in Section 2).

For vehicles equipped with manual gearboxes:

– the gearbox is in neutral;
and
– the clutch pedal is released.

If the warning light flashes, this means that the clutch pedal is not sufficiently released;
and
– the vehicle speed is less than approximately 7 mph (3 km/h).

For all vehicles:

Warning light on the instrument panel is lit when the engine is on standby.

The vehicle equipment remain operational while the engine is stopped.

If you get out of the vehicle, a beep notifies you that the engine is on standby and has not been switched off.

Preventing the engine from standing by

In certain situations, such as negotiating a crossroads for instance, it is possible to keep the engine running so as to be ready to move off quickly.

For vehicles equipped with automatic gearboxes:

Keep the vehicle stationary without pressing too hard on the brake pedal.

For vehicles equipped with manual gearboxes:

Keep the clutch pedal pressed right down.

Conditions for coming out of engine standby

For vehicles equipped with automatic gearboxes:

– Brake pedal released, position **D** or **M** engaged;

or

– Brake pedal is released, position **N** engaged and parking brake released;

or

– Parking brake is applied again, position **P** engaged, or position **N** engaged with parking brake applied;

or

– position **R** is engaged;

or

– the accelerator pedal is pressed.

For vehicles equipped with manual gearboxes:

– Gearbox is in neutral and clutch pedal is slightly depressed;

or

– the engine is in gear and the clutch pedal is pressed right down.

Special note: depending on the vehicle, if you switch off the ignition when the engine is on standby, the warning light is displayed for a few seconds on the instrument panel.

To fill up with fuel, the engine must be stopped (and not on standby): stop the engine (Please See “Starting, stopping the engine” in Section 2).

Conditions preventing the standby of the engine

Certain conditions prevent the system from using the engine standby function, including when:

– reverse gear is engaged;

– the bonnet is not locked;

– the outdoor temperature is too low or too high (less than around 0 °C or higher than around 35 °C);

– the battery is not sufficiently charged;

– the difference between the vehicle interior temperature and the automatic climate control instruction is too high;

– for vehicles with automatic gearboxes, the gradient is steeper than approximately 5%;

– the “Clear View” function is activated (please see “Automatic Climate Control” in Section 3);

– the engine temperature is too low;

– the emission control system is being regenerated;

– ...

Warning light is displayed on the instrument panel. This notifies you that engine standby is not available.

Deactivate the Stop and Start function for any operation performed in the engine compartment.

Special feature of the automatic engine re-start

Under certain conditions, the engine can restart on its own in order to guarantee your safety and comfort.
This can occur especially when:

– the outdoor temperature is too low or too high (less than around 0 °C or higher than around 35 °C);
– the “Clear View” function is activated (please see “Automatic Climate Control” in Section 3);
– the battery is not sufficiently charged;
– the vehicle speed is above 3 mph (5 km/h) (downhill slope, etc.); ;
– repeated pressing on the brake pedal or braking system requirement;
– ...

Special note: for some of these conditions, automatic restarting of the engine is deactivated if a front door or the tailgate is open.

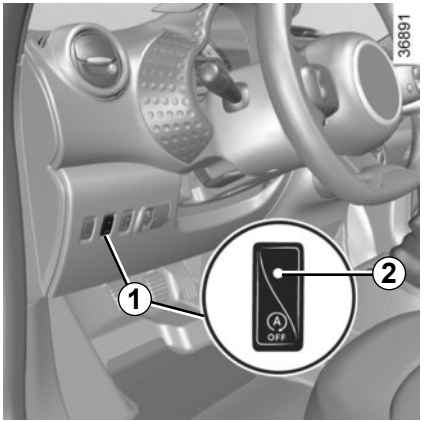

Deactivating, activating the function

Press switch ***1*** to deactivate the function. Warning light ***2*** in the switch lights up.

Pressing this again will reactivate the system. Warning light ***2*** in switch ***1*** goes out.

Special note: with the engine on standby, press switch ***1*** to automatically restart the engine.

The system is automatically reactivated each time the vehicle is started (see “Starting, stopping the engine” in Section 2).

Operating faults

If the warning light ***2*** integrated on the switch ***1*** comes on, the system is deactivated.

Please consult an authorised dealer.

The ignition must be switched off before leaving the vehicle (please see the information on “Starting, stopping the engine” in Section 2).

The following operating conditions:

– driving for long periods when the low fuel level warning light is lit;
– using leaded petrol;
– using fuel or lubrication additives which are not approved.

Or operating faults such as:

– faulty ignition system, running out of fuel or disconnected spark plugs resulting in the engine misfiring or cutting out when driving;
– loss of power,

as they may cause the catalytic converter to overheat and thus reduce its efficiency, **or damage it irreparably and cause heat damage to the vehicle**.

If you notice any of the above operating faults, have the necessary repairs carried out as soon as possible by an approved Dealer.

These faults may be avoided by regularly taking your vehicle to an approved Dealer at the intervals specified in the Maintenance document.

Starting problems

To avoid damaging the catalytic converter, **do not keep** trying to start the engine (using the start button, or by pushing or towing the vehicle) **without having identified and corrected the starting fault**.

If the fault cannot be identified, do not keep trying to start the engine, but contact an approved Dealer.

Do not park the vehicle or run the engine in locations where combustible substances or materials such as grass or leaves can come into contact with the hot exhaust system.

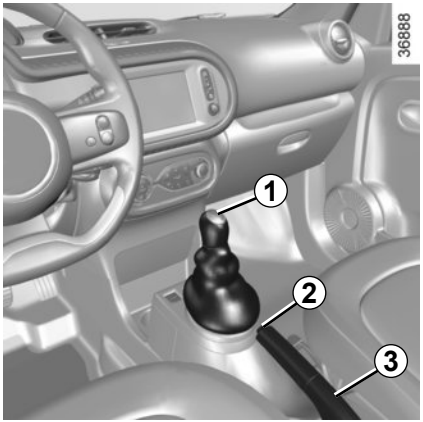

Gear lever

Selecting reverse gear

Vehicle with manual gearbox: Follow the grid marked on knob ***1*** and, depending on the vehicle, lift the ring against the knob to engage reverse gear.

Vehicles with automatic gearbox: refer to the information on the "Automatic gearbox" in Section 2.

The reversing lights will come on as soon as reverse gear is selected with the ignition on.

Handbrake

To release:

Pull the lever ***3*** up slightly, press button ***2*** and then lower the lever to the floor.

The red warning light on the instrument panel will come on if you are driving with an incorrectly released handbrake.

To apply:

Pull lever ***3*** upwards. Check that the vehicle is immobilised. The warning light on the instrument panel will come on.

An impact to the underside of the vehicle while manoeuvring (e.g.: striking a post, raised kerb or other street furniture) may result in damage to the vehicle (e.g.: deformation of an axle).

To avoid any risk of accident, have your vehicle checked by an approved Dealer.

Make sure that the handbrake is properly released when driving (red indicator light off), otherwise overheating, or even damage, may occur.

When stationary, and depending on the slope and/or vehicle load, it may be necessary to pull up the handbrake at least two extra notches and engage a gear (1st or reverse gear) for vehicles with a manual gearbox or position **P** for vehicles with an automatic gearbox.

Fuel consumption is accredited in accordance with a standard regulatory method. Identical for all manufacturers, this enables vehicles to be compared with one another. Consumption in real time depends on vehicle usage conditions, the equipment fitted and the user's driving style. To optimise fuel consumption, please refer to the following advice.

Depending on the vehicle, you will have various functions which enable you to lower your fuel consumption:

– gear change indicator;
– the journey record and eco-driving advice via the multimedia display;
– ECO mode activated by button ECO.

If fitted on the vehicle, the navigation system provides additional information.

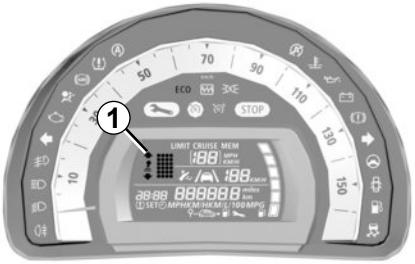

Gear change indicator *1*

To obtain optimum consumption levels, a warning light on the instrument panel lets you know the best time to move up or down a gear:

move up a gear;

move down a gear.

Journey record

Once the engine is switched off, you will see "Journey record" displayed on the screen ***2***, enabling you to view information relating to your last journey.

This indicates:
– average fuel consumption;
– number of miles/kilometres travelled;
– number of miles/kilometres saved.

An overall rating from 0 to 100 is displayed to let you assess your eco driving performance. The higher the score, the better your eco-driving performance.
Eco advice is given to help improve your performance.
With your favourite journeys saved, you can evaluate your performance.
For more information, please see the multimedia system instructions.

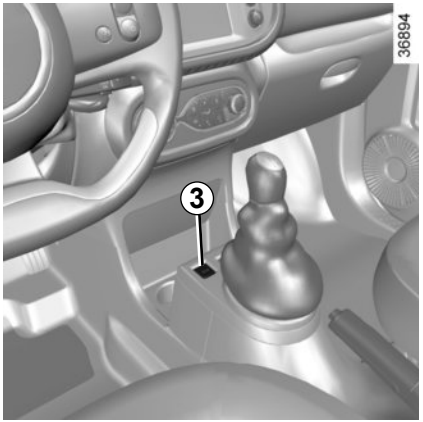

Mode ECO

ECO mode is a function which optimises fuel consumption. It acts on all elements which consume fuel (engine power, heating and/or air conditioning, etc).

Activating the function

Press the switch ***3***.

The warning light **ECO** comes on on the instrument panel to confirm activation.

While driving, it is possible to leave the ECO mode temporarily in order to improve engine performance.

To do this, press the accelerator pedal firmly and fully.

ECO mode is reactivated when you take pressure off the accelerator pedal.

Disabling the function

Press the switch ***3***.

The warning light **ECO** goes out on the instrument panel to confirm deactivation.

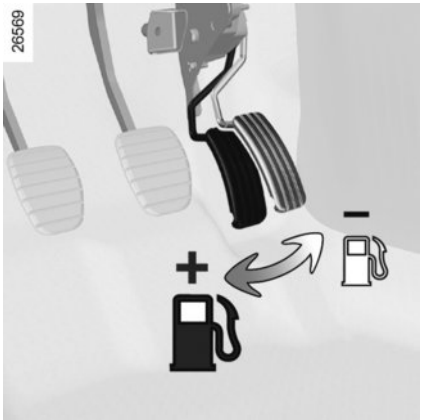

Driving advice and ECO driving

Behaviour

– Drive carefully for the first few miles until the engine reaches its normal operating temperature, rather than let it warm up while the vehicle is stationary.
– Speed is expensive.
– Sporty driving uses a lot of fuel: drive with a light right foot.
– Do not overrev the engine in the intermediate gears.
  You should always use the highest gear possible.
– Avoid sudden acceleration.
– Brake as little as possible. If you anticipate an obstacle or bend in advance, you may then simply release the accelerator pedal.
– Do not try to maintain the same speed up a hill, accelerate no more than you would on the level. Keep your foot in the same position on the accelerator pedal.
– Double declutching and accelerating before switching off are unnecessary in modern vehicles.
– Bad weather, flooded roads:

Do not drive through floods if the water is above the lower edge of the wheel rims.

Obstructions to the driver
On the driver's side, only use mats suitable for the vehicle, attached with the pre-fitted components, and check the fitting regularly. Do not lay one mat on top of another.
There is a risk of wedging the pedals

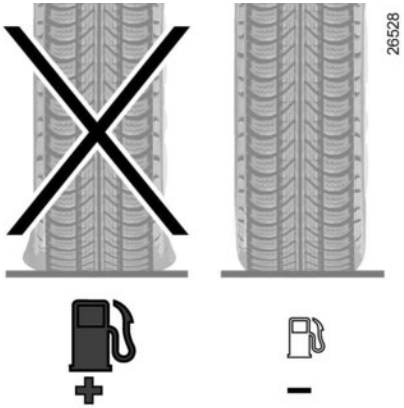

Tyres

– An underinflated tyre increases fuel consumption.
– The use of non-recommended tyres can increase fuel consumption.

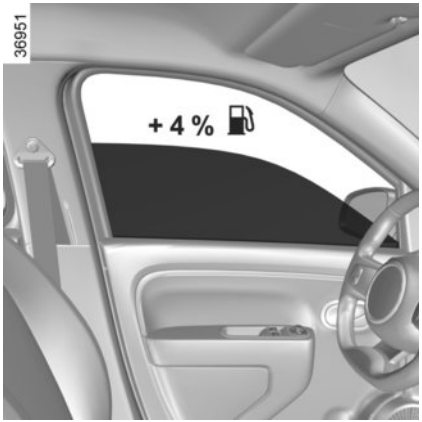

Advice on use

– Favour the ECO mode.
– Electricity is fuel; switch off all the electrical components which are not really needed. **However** (safety first), keep your lights on when the visibility is bad (“see and be seen”).
– Use the air vents. Driving with the windows open at 60 mph (100 km/h) will increase fuel consumption by 4%.
– Never fill the fuel tank right to the brim to avoid overflow.
– **In vehicles fitted with air conditioning,** it is normal to observe an increase in fuel consumption (especially in urban conditions) when it is used. For vehicles fitted with manual air conditioning, switch off the system when it is not required.

Advice for reducing consumption and therefore helping to preserve the environment:

If the vehicle has been parked in the sun, open the doors for a few moments to let the hot air escape before starting the engine.
– Do not leave an empty roof rack fitted to the vehicle.
– Avoid using the car for door-to-door calls (short journeys with long waits in between) because the engine never reaches its normal operating temperature.

Your vehicle complies with criteria for recycling and recovering vehicles at the end of their service life which will come into force in 2015.

Some parts of your vehicle have therefore been designed to facilitate future recycling.

These parts are easy to remove so that they can be recovered and reprocessed by recycling companies.

By virtue of its design, moderate fuel consumption and initial settings, your vehicle also conforms to current anti-pollution regulations. The manufacturer is actively striving to reduce pollutant exhaust gas emissions and to save energy. But the fuel consumption of your vehicle and the level of pollutant exhaust gas emissions are also your responsibility. Ensure that it is maintained and used correctly.

Maintenance

It is important to remember that failure to respect anti-pollution regulations could lead to legal action being taken against the vehicle owner.

In addition, replacing engine, fuel supply system and exhaust components with parts other than those originally recommended by the manufacturer may alter your vehicle so that it no longer complies with anti-pollution regulations.

Have your vehicle adjusted and checked by an authorised dealer, in accordance with the instructions given in your maintenance schedule: they will have all the equipment necessary for ensuring that your vehicle is maintained to its original standard.

Engine adjustments

– **Spark plugs:** for optimum conditions of use, output and performance the specifications laid down by our Design Department must be strictly applied.

  If the spark plugs have to be changed, use the make, type and gap specified for your vehicle's engine. Contact an authorised dealer for this.

– **Air filter, fuel filter:** a choked element will reduce efficiency. It must be replaced.
– **Ignition and idle speed:** no adjustment is needed.

Exhaust gas monitoring system

The exhaust gas monitoring system will detect any operating faults in the vehicle's antipollution system.
If this system malfunctions, toxic substances may be released into the atmosphere or damage may occur.

This warning light on the instrument panel will indicate if there are any faults in the system:
This lights up when the ignition is switched on and goes out when the engine is started.

– If it lights up continuously, consult an approved Dealer as soon as possible;

– if it flashes, reduce the engine speed until the light stops flashing. Contact an authorised dealer as soon as possible.

ENVIRONMENT

Your vehicle has been designed with respect for the **environment** in mind for its entire service life: during production, use and at the end of its life.
This commitment is illustrated by the of the manufacturer eco² signature.

Manufacture

Your vehicle has been manufactured at a factory which complies with a policy to reduce the environmental impact on the surrounding areas (reduction of water and energy consumption, visual and noise pollution, atmospheric emissions and waste water; sorting and reusing waste).

Emissions

In usage phase, your vehicle was designed to emit fewer greenhouse gases (CO2) and therefore consume less fuel.

Our vehicles are also equipped with a particle filter system including a catalytic converter, an oxygen sensor and an active carbon filter (the latter prevents vapour from the fuel tank being released into the open air).

Please make your own contribution towards protecting the environment too

– Worn parts replaced in the course of routine vehicle maintenance (vehicle battery, oil filter, air filter, batteries, etc.) and oil containers (empty or filled with used oil) must be disposed of through specialist organisations.
– At the end of the vehicle's service life, it should be sent to approved centres to ensure that it is recycled.
– In all cases, comply with local legislation.

Recycling

Your vehicle is 85% recyclable and 95% recoverable.

To achieve these objectives, many of the vehicle components have been designed to enable them to be recycled. The materials and structures have been carefully designed to allow these components to be easily removed and reprocessed by specialist companies.

In order to preserve raw material resources, this vehicle incorporates numerous parts made from recycled plastics or renewable materials (vegetable or animal-derived materials such as cotton or wool).

TYRE PRESSURE LOSS WARNING (1/9)

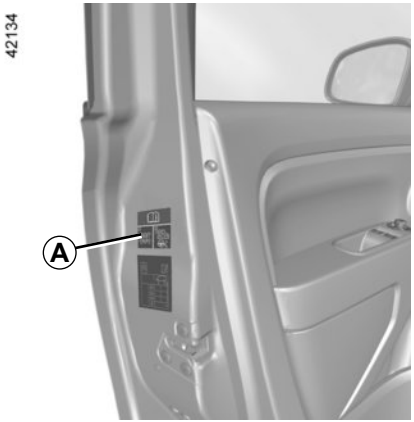

If fitted on the vehicle, this system warns the driver of pressure loss in one or several tyres.

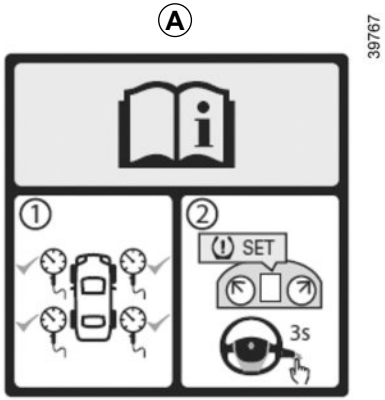

System identification

There are two tyre pressure loss warning systems:

– **System A**: can be seen on the label ***A*** in the vehicle. To verify its presence, open the driver's door.

– **System B**: can be seen on the label ***A*** in the vehicle.

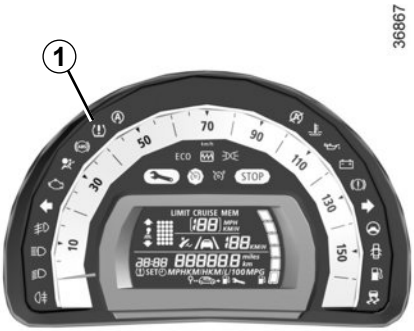

SYSTEM A

Operating principle

This system detects a loss of pressure in one of the tyres by measuring the wheel speed while driving.

Warning light ***1*** comes on to alert the driver in the event of insufficient pressure (deflated wheel, punctured tyre, etc.).

Operating conditions

The system should be reset with an inflation pressure equal to that given on the tyre inflation pressure label. Otherwise it risks not giving a reliable warning in the event of a significant loss of pressure. Please refer to the information on “Tyre pressures” in Section 4.

In the following situations, the system risk coming into action late or not functioning correctly:

– system not reset after reinflation or any operation on the wheels;
– system badly reset: different inflation pressures from the recommended pressures;
– significant change in load or distribution of load on one side of the vehicle;
– sporty driving with strong acceleration;
– driving on snowy or slippery surface;
– driving with snow chains;
– fitting a single new tyre;
– use of tyres not approved by the network.
– ...

This function is an additional driving aid.

The function does not take the place of the driver. It cannot, therefore, under any circumstances replace the vigilance or the responsibility of the driver.

Check the tyre pressures, including the emergency spare wheel, once a month.

SYSTEM A (cntd.)

Resetting the standard level for the tyre pressures

This should be done:

– after each reinflation or readjustment of the pressure of one of the tyres;

– when the standard tyre pressure needs to be changed to adapt to usage conditions (empty, carrying a load, motorway driving, etc.);

– after changing a wheel;

– after using the tyre inflation kit;

– after swapping a wheel (however, this practice is not recommended).

It should always be done after checking the tyre pressure of all four tyres when cold.

Tyre pressures must correspond to the current usage of the vehicle (empty, carrying a load, motorway driving, etc.).

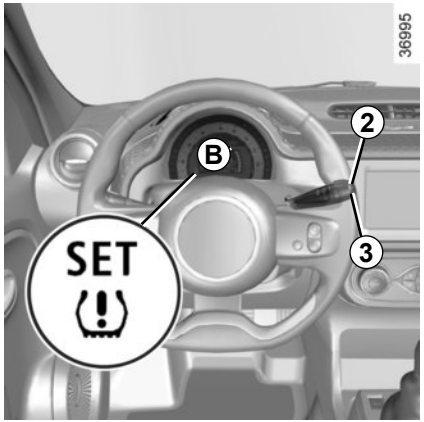

Resetting procedure

With the ignition on, depending on the vehicle:

– repeatedly press button ***2*** or ***3*** to select the "**SET** " warning light on the display ***B***;

– press and hold (around 3 seconds) button ***2*** or ***3*** to start initialisation. When the "**SET** " warning light flashes for around five seconds, this indicates that the reset request for the tyre pressure reference value has been taken into account.

Or

– repeatedly press the button ***2*** to select the "**SET** " warning light on the display ***B***;

– press and hold (around 3 seconds) the button ***2*** to start initialisation. The flashing, lasting around five seconds, followed by a constant display of the "**SET** " indicates that the reset request for the tyre pressure reference value has been taken into account.

Reinitialisation is carried out after a few minutes' driving.

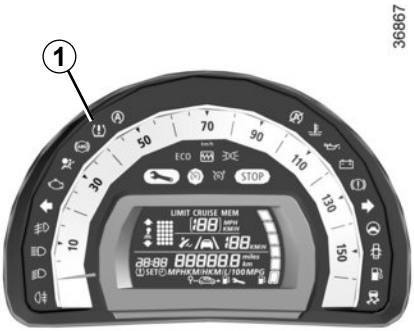

SYSTEM A (cntd.)

Inflate tyres and reset

The ***1*** warning light comes on (not flashing).

This indicates that at least one tyre is flat or punctured.
In the event of a flat tyre, inflate the relevant tyre.
In the event of a puncture, change the tyre or consult an authorised dealer.
Check and readjust the pressure of the four tyres when cold, and launch the reinitialisation of the tyre pressure reference value.

Warning light ***1*** goes out after launching the reset of the tyre pressure reference value.

System to be checked

Warning light ***1*** flashes for several seconds, then stays on. This warning light appears along with the warning light.

They indicate a system fault. Please consult an authorised dealer.

The sudden loss of pressure in a tyre (burst tyre, etc.) cannot be detected by the system.

System unavailable

Warning light ***1*** flashes for several seconds, then stays on.

SYSTEM A (cntd.)

Readjustment of tyre pressures

The tyre pressures must be adjusted when cold (please refer to the label located on the edge of the driver's door).

If tyre pressures cannot be checked when the tyres are **cold**, the recommended pressures should be increased by **0.2** to **0.3** bar (**3** PSI).

Never deflate a hot tyre.

After each reinflation or readjustment of the tyre pressure, launch the reinitialisation of the tyre pressure reference value.

Replacing wheels/tyres

Only use equipment approved by the brand network, or the system risks being activated late or not operating correctly. Please see the information on "Tyres" in Section 5.

After each change of wheel/tyre, readjust the tyre pressure and launch the reinitialisation of the tyre pressure reference value.

Tyre repair product and inflation kit

Only use equipment approved by the brand network, or the system risks being activated late or not operating correctly. Please refer to "Tyre inflation kit" in Section 5.

After using the tyre inflation kit, readjust the tyre pressure and launch the reinitialisation of the tyre pressure reference value.

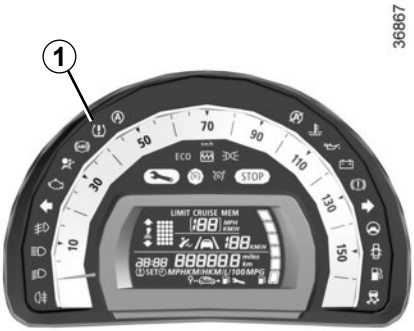

SYSTEM B

Operating principle

Each wheel (except for the emergency spare wheel) has a sensor in the inflation valve which periodically measures the tyre pressure while driving.

Warning light ***1*** comes on to alert the driver in the event of insufficient pressure (deflated wheel, punctured tyre, etc.).

Resetting the standard level for the tyre pressures

This should be done:
- when the standard tyre pressure needs to be changed to adapt to usage conditions (empty, carrying a load, motorway driving, etc.);
- after swapping a wheel (however this practice is not recommended);
- after changing a wheel.

It should always be done after checking the tyre pressure of all four tyres when cold.

Tyre pressures must correspond to the current usage of the vehicle (empty, carrying a load, motorway driving, etc.).

This function is an additional driving aid.

The function does not take the place of the driver. It cannot, therefore, under any circumstances replace the vigilance or the responsibility of the driver.

Check the tyre pressures, including the emergency spare wheel, once a month.

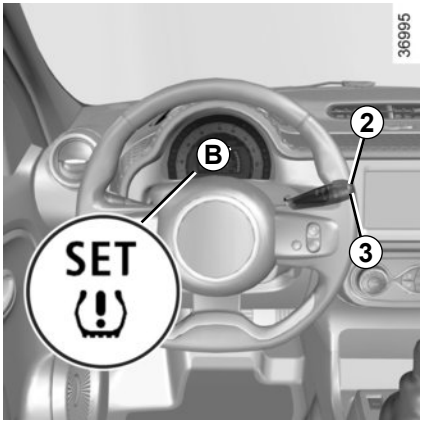

SYSTEM B (cntd.)

Resetting procedure

With the ignition on, depending on the vehicle:

– repeatedly press button ***2*** or ***3*** to select the "**SET** " warning light on the display ***B***;
– press and hold (around 3 seconds) button ***2*** or ***3*** to start initialisation.

When the "**SET**" warning light flashes for around five seconds, this indicates that the reset request for the tyre pressure reference value has been taken into account.

Reinitialisation is carried out after a few minutes' driving.

Note: the standard tyre pressure cannot be less than that recommended and indicated on the door frame.

Or

– repeatedly press the button ***2*** to select the "**SET** " warning light on the display ***B***;
– press and hold (around 3 seconds) the button ***2*** to start initialisation. The flashing, lasting around five seconds, followed by a constant display of the "**SET** " indicates that the reset request for the tyre pressure reference value has been taken into account.

Reinitialisation is carried out after a few minutes' driving.

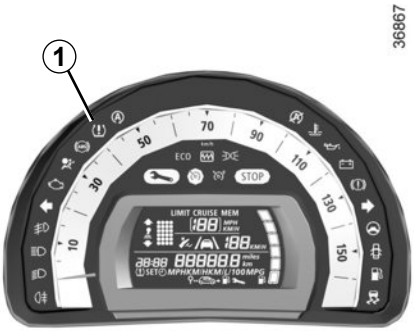

SYSTEM B (cntd.)

Inflate tyres

The ***1*** warning light comes on (not flashing).
This indicates that at least one tyre is flat.

Check and, if necessary, readjust the pressures of the four wheels when cold.

The warning light ***1*** goes off after a few minutes' driving.

Puncture

Warning light ***1*** comes on steady, accompanied by a beep and warning light STOP.

They indicate that at least one wheel is punctured or severely underinflated. Replace it or contact an authorised dealer if it is punctured. Top up the tyre pressure if the wheel is deflated.

The sudden loss of pressure in a tyre (burst tyre, etc.) cannot be detected by the system.

Warning light STOP requires you to stop immediately, for your own safety, as soon as traffic conditions allow.

Check tyre sensors

The warning light ***1*** flashes for several seconds, then stays on, along with the warning light .

These indicate that at least one of the sensors is defective or missing. In other cases, contact an authorised dealer.

SYSTEM B (cntd.)

Readjustment of tyre pressures

The tyre pressures must be adjusted when cold (please refer to the label located on the edge of the driver's door).
If tyre pressures cannot be checked when the tyres are **cold**, the recommended pressures must be increased by **0.2** to **0.3** bar (**3** PSI).

Never deflate a hot tyre.

Replacing wheels/tyres

This system requires specific equipment (wheels, tyres, hubcaps, etc.). Please see the information on "Tyres" in Section 5.
Contact an approved Dealer to fit new tyres and to find out about available accessories compatible with the system and available from your dealer network: the use of any other accessory could affect the correct operation of the system or damage a sensor.

Emergency spare wheel

If the vehicle is equipped with an emergency spare wheel, it will not have a sensor. When it is fitted on the vehicle, the warning light flashes for several seconds, then stays on, together with the warning light .

Tyre repair product and inflation kit

Because the valves are specially designed, only use equipment approved by the approved network. Please refer to "Tyre inflation kit" in Section 5.

Depending on the vehicle, this is composed of:
- **anti-lock braking system (ABS);**
- **electronic stability control (ESC) with understeer control, traction control and assistance with side winds;**
- **emergency brake assist;**
- **hill start assistance.**

These functions are an additional aid in the event of critical driving conditions, enabling the vehicle behaviour to be adapted to suit the driving conditions.

The functions do not take the place of the driver. **They do not increase the vehicle's limits and should not encourage you to drive more quickly.** Therefore, they can under no circumstances replace the vigilance or responsibility of the driver when manoeuvring the vehicle (the driver must always be ready for sudden incidents which may occur when driving).

Anti-lock braking system (ABS)

Under heavy braking, the ABS prevents the wheels from locking, allowing the stopping distance to be managed and keeping control of the vehicle.
Under these circumstances, the vehicle can be steered to avoid an obstacle whilst braking. In addition, this system can increase stopping distances, particularly on roads with low surface grip (wet ground etc.).
You will feel a pulsation through the brake pedal each time the system is activated. The ABS does not in any way improve the vehicle's physical performance relating to the road surface and road-holding. It is still **essential** to follow the rules of good driving practice (such as driving at a safe distance from the vehicle in front etc.).

In an emergency, apply **firm and continuous pressure** to the brake pedal. There is no need to pump it repeatedly. The ABS will modulate the force applied in the braking system.

Operating faults:

- and ABS come on on the instrument panel: ABS, ESC and emergency brake assist are deactivated. **Braking is always enabled**;
- ABS, , and STOP come on on the instrument panel: **this indicates a fault in the braking system.**

In both cases, consult an approved Dealer.

Your braking systems are partially operational. However, it is **dangerous to brake suddenly** and it is essential to stop immediately, as soon as traffic conditions allow. Contact an approved dealer.

Electronic stability control (ESC) with understeer control, traction control and assistance with side winds

Electronic stability control ESC

This system helps you to keep control of the vehicle in critical driving conditions (avoiding an obstacle, loss of grip on a bend, etc.).
A sensor in the steering wheel detects the direction selected by the driver.

Other sensors throughout the vehicle measure the actual direction.

The system compares driver input to the actual trajectory of the vehicle and corrects the trajectory if necessary by controlling the braking of certain wheels and/or engine power. In the event that the system is engaged, indicator light flashes on the instrument panel.

Understeer control

This system optimises the action of the ESC in the case of pronounced understeer (loss of front axle road holding).

Assistance with side winds

This system optimises the action of the ESC and also helps to control the vehicle in case of variation of side winds. It helps maintain the vehicle trajectory through the use of the brakes.

If the system is activated, the indicator light may flash on the instrument panel.

Traction control

This system helps to limit wheelspin of the drive wheels and to control the vehicle when pulling away accelerating or decelerating.
Using the wheel sensors, the system measures and compares the speed of the drive wheels at all times and slows down their over-rotation. If a wheel is starting to slip, the system brakes automatically until the drive supplied becomes compatible with the level of grip under the wheel again.

The system also adjusts the engine speed to the grip available under the wheels, independently of the pressure exerted on the accelerator pedal.

Operating faults

When the system detects an operating fault the warning lights and appear on the instrument panel. In this case, the ESC and traction control system are deactivated.

Consult an approved dealer.

Emergency brake assist

This system supplements the ABS and helps reduce vehicle stopping distances.

The system allows an emergency braking situation to be detected when the brake pedal is pressed. In this case, the braking assistance immediately develops maximum power and may trigger ABS regulation.

ABS braking is maintained as long as the brake pedal is applied.

Hazard warning lights switching on
Depending on the vehicle, these may light up in the event of sudden deceleration.

Braking anticipation
Depending on the vehicle, when you rapidly release the accelerator, the system anticipates the braking manoeuvre in order to reduce stopping distances.

When using the cruise control:
– if you use the accelerator, when you release it, the system may be triggered;
– if you do not use the accelerator, the system will not be triggered.

Operating faults
When the system detects an operating fault, the warning light comes on on the instrument panel.

Consult an approved dealer.

These functions are an additional aid in the event of critical driving conditions, enabling the vehicle behaviour to be adapted to suit the driving conditions.

The functions do not take the place of the driver. **They do not increase the vehicle's limits and should not encourage you to drive more quickly.** Therefore, they can under no circumstances replace the vigilance or responsibility of the driver when manoeuvring the vehicle (the driver must always be ready for sudden incidents which may occur when driving).

Hill start assistance

Depending on the gradient of the incline, this system assists the driver when starting on a hill. It prevents the vehicle from rolling backwards, depending on the slope, by automatically applying the brakes when the driver lifts his/her foot off the brake pedal to depress the accelerator pedal.

It only operates when the gear lever is in a position other than neutral (other than **N** or **P** for automatic transmissions) and the vehicle is completely stationary (brake pedal depressed)

The system holds the vehicle for approximately **2 seconds**. The brakes are then gradually released (the vehicle will move according to the slope).

The hill start assistance system cannot completely prevent the vehicle from rolling backwards in all situations (extremely steep gradients etc.).

In all cases, the driver may depress the brake pedal to prevent the vehicle from rolling backwards.

The hill start assistance function should not be used for prolonged stops: use the brake pedal.

This function is not designed to immobilise the vehicle permanently.

If necessary, use the brake pedal to stop the vehicle.

The driver must remain particularly vigilant when driving on slippery or low-grip surfaces.

Risk of serious injury.

LANE DEPARTURE WARNING (1/2)

This lane departure warning system notifies the driver when they accidentally cross a continuous or broken line.
This function uses a camera attached to the windscreen, behind the rear-view mirror.

This function is a driving aid in the event of the accidental crossing of a continuous or broken line in the road. However, the function is not intended to replace the driver. The function can be disrupted under certain conditions, including:

- poor visibility (rain, snow, fog, dirty windscreen, glare of the sun, partially obscured road lines, etc.);
- roads with tight bends;
- closely following a vehicle in the same lane;
- worn road markings, difficult to distinguish or spaced very widely apart;
- narrow roads;
- ...

In this case, warning light on the instrument panel goes out to indicate that the function will not operate (lines not detected).

Under no circumstances should this function replace the driver's care or responsibility whilst performing manoeuvres.

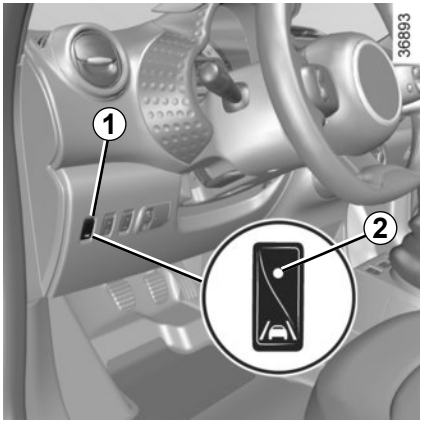

Activation

Press the switch ***1***: the warning light ***2*** integrated on the switch ***1*** comes on.

The function sounds the alarm if:

– the warning light lighted integrated on the switch ***1*** is on;
and
– the vehicle speed is greater than approximately 45 mph (70 km/h);
and
– lines are detected.

Warning light comes on on the instrument panel to notify the driver.

When a line is crossed and the indicators have not been activated, the function alerts the driver through warning light on the instrument panel, and a beep.

Conditions for non-activation of alerts

– Indicators activated or having been activated less than approximately four seconds prior to departing from the lane;
– Very fast lane departure;
– Driving continuously on a line;
– On bends, the function allows for slightly cutting the bend;
– dirt covering the windscreen camera;
– ...

Deactivation

Press the switch ***1***. The warning light ***2*** in the switch ***1*** goes out.

Operating faults

In the event of a malfunction, the warning light on the button ***1*** remains off, and warning lights and come on on the instrument panel alongside a beep. Please consult an authorised dealer.

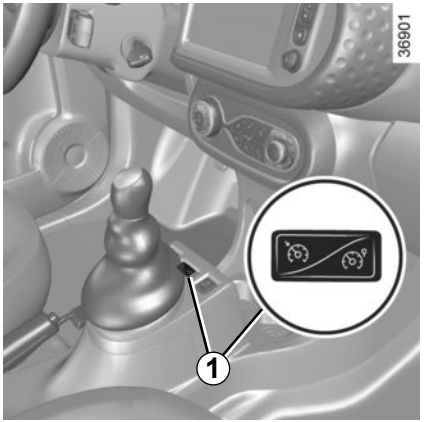

The speed limiter function helps you stay within the driving speed limit that you choose, known as the **limit speed**.

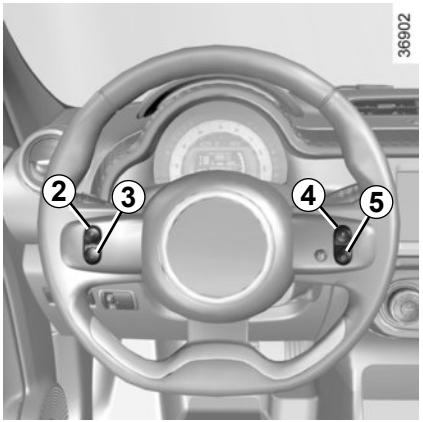

Controls

1 Main “On/Off” switch.

2 Limit speed activation, storage and increase switch (+).

3 Decreasing the limit speed (-).

4 Activation and recall of memorised limit speed (R).

5 Speed limiter function standby (with limited speed memory) (O).

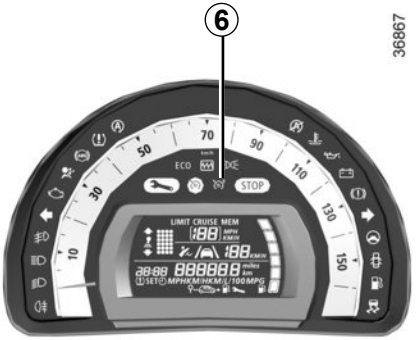

Switching on

Press the side switch ***1*** . Indicator light ***6*** comes on, lit orange, and the message “**LIMIT**” appears on the instrument panel, accompanied by dashes to indicate that the speed limiter function is activated and waiting to store a limited speed.

To store the current speed, press switch ***2*** (+): the limited speed will replace the dashes.

The minimum stored speed is 20 mph (30 km/h).

Driving

When a limited speed has been stored and this speed is not reached, driving is similar to driving a vehicle without the speed limiter function.

Once you have reached the stored speed, no effort on the accelerator pedal will allow you to exceed the programmed speed except in an emergency (refer to information on “Exceeding the limit speed”).

Varying the limit speed

The limit speed may be changed by repeatedly pressing:

– switch ***2*** (+) to increase speed;

– switch ***3*** (-) to reduce speed.

The speed limiter function is in no way linked to the braking system.

Exceeding the limit speed

It is possible to exceed the limit speed at any time. To do this: press the accelerator pedal **firmly and fully** (beyond the resistance point).

While the speed is being exceeded, the limit speed displayed on the instrument panel flashes.

Then, release the accelerator: the speed limiter function will return as soon as you reach a speed lower than the stored speed.

Limited speed cannot be maintained

If driving up or down a steep gradient, the system is unable to maintain the limited speed: the memorised speed flashes on the instrument panel and a beep sounds at regular intervals to inform you.

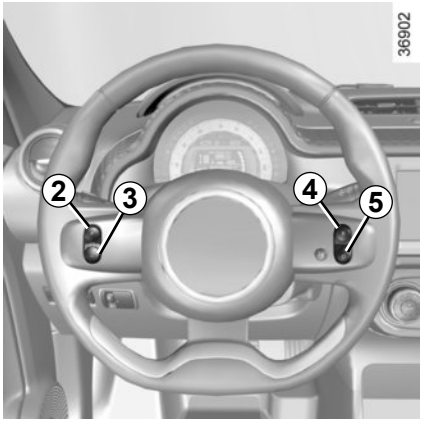

Putting the function on standby

The speed limiter function is suspended when you press switch ***5*** (O). In this case, the limit speed remains stored and the message "**MEM**" accompanied by this speed appears on the instrument panel.

Recalling the limit speed

If a speed has been saved, it can be recalled by pressing switch ***4*** ((R)).

When the speed limiter is put on standby, pressing switch ***2*** (+) reactivates the function without taking into account the stored speed: it is the speed at which the vehicle is moving that is taken into account.

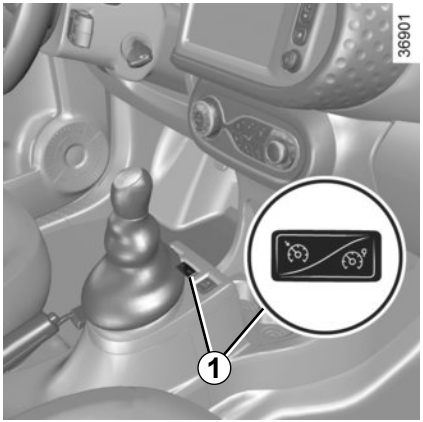

Switching off the function

The speed limiter function is deactivated if you press switch ***1***: in this case a speed is no longer stored. The orange instrument panel warning light goes out, confirming that the function is stopped.

CRUISE CONTROL (1/4)

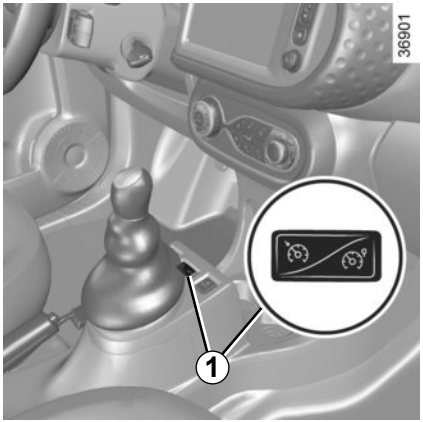

The cruise control function helps you to maintain your driving speed at a speed that you choose, called the **cruising speed.**

This cruising speed may be set at any speed above 20 mph (30 km/h).

The cruise control function is in no way linked to the braking system.

This function is an additional driving aid. It does not take the place of the driver.

Therefore, it can under no circumstances replace the driver's responsibility to respect speed limits and to be vigilant (the driver must always be ready to brake).

Cruise control must not be used in heavy traffic, on undulating or slippery roads (black ice, aquaplaning, gravel) and during bad weather (fog, rain, side winds etc.).

There is a risk of accidents.

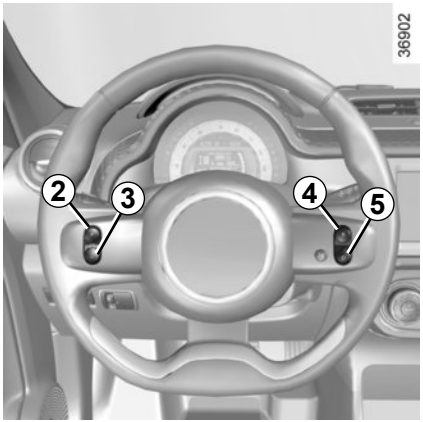

Controls

1 Main "On/Off" switch.

2 Cruising speed activation, storage and increase switch (+).

3 Decreasing cruising speed (-).

4 Activation with recall of saved cruising speed (R).

5 Switch the function to standby (with cruising speed saved) (O).

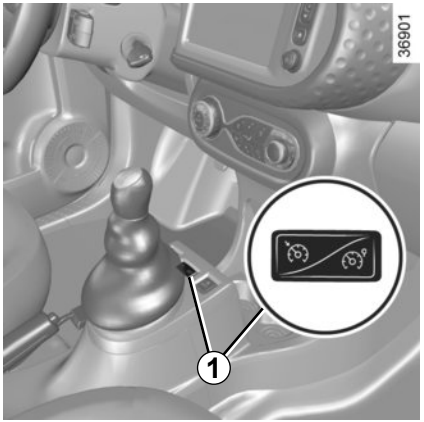

Switching on

Press switch ***1*** side ⏲.

Indicator light ***7*** comes on, lit green, and the message "**CRUISE**" appears on the instrument panel, accompanied by dashes to indicate that the cruise control function is activated and waiting to store a cruising speed.

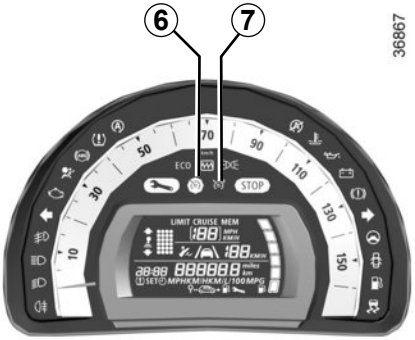

Activating cruise control

At a steady speed (above 18 mph (30 km/h approximately)) press switch ***2*** or (+): the function is activated and the current speed is saved.

The cruising speed replaces the dashes and the cruise control is confirmed by the appearance of warning light ***6*** lit green, as well as warning light ***7***.

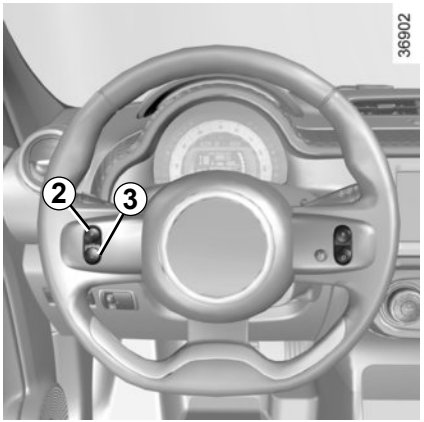

Driving

Once a cruising speed is memorised and the cruise control function is active, you may lift your foot off the accelerator pedal.

Please note that you must keep your feet close to the pedals in order to react in an emergency.

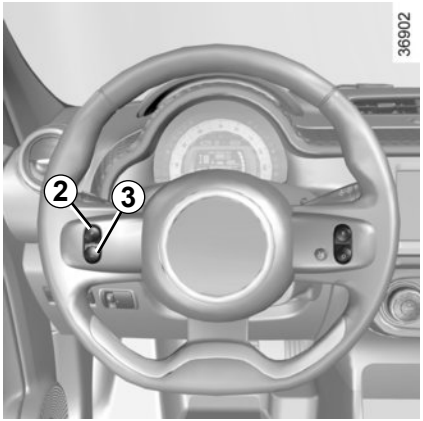

Adjusting the cruising speed

The cruising speed may be changed by pressing the following repeatedly:

– switch ***2*** (+) to increase the speed,

– switch ***3*** (-) to decrease the speed.

The cruise control function is in no way linked to the braking system.

Exceeding the cruising speed

The cruising speed may be exceeded at any time by depressing the accelerator pedal. While it is being exceeded, the cruising speed flashes on the instrument panel.

Then, release the accelerator: after a few seconds, the vehicle will automatically return to its set cruising speed.

Cruising speed cannot be maintained

When driving down a steep gradient, the system is unable to maintain the cruising speed: the stored speed will flash on the instrument panel information display to inform you of this situation.

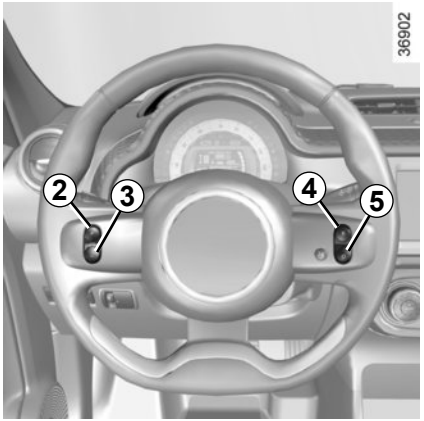

Putting the function on standby

The function is set to standby if you:

– use the switch ***5*** (O);

– the brake pedal;

– depress the clutch pedal or the shift into neutral if the vehicle has an automatic gearbox.

In all three cases, the cruising speed remains stored and the message "**MEM**" appears on the instrument panel.

Standby is confirmed when indicator light goes out.

Returning to the cruising speed

If a speed is stored, it can be recalled, once you are sure that the road conditions are suitable (traffic, road surface, weather conditions, etc.). Press switch ***4*** (R) if the vehicle speed is above 20 mph (30 km/h).
When the stored speed is recalled, activation of the cruise control is confirmed by the illumination of the warning light.

NB: if the speed previously stored is much higher than the current speed, the vehicle will accelerate more rapidly to reach this threshold.

When the cruise control function is put on standby, pressing switch ***2*** (+) reactivates the cruise control function without taking into account the stored speed: it is the speed at which the vehicle is moving that is taken into account.

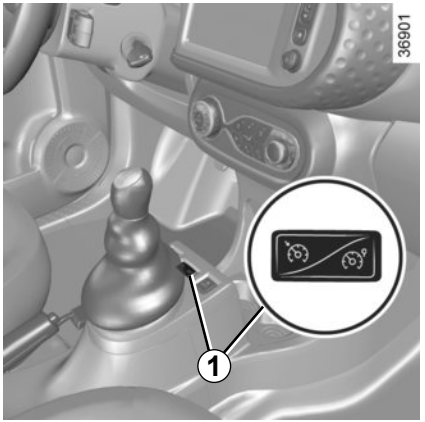

Switching off the function

The cruise control function is deactivated if you press switch ***1***: in this case a speed is no longer stored. The two instrument panel warning lights and go out to confirm that the function is deactivated.

Putting the cruise control on standby or switching it off does not cause a rapid reduction in speed: you must brake by depressing the brake pedal.

PARKING DISTANCE CONTROL (1/2)

Operating principle

Ultrasonic detectors, installed in the rear bumper (depending on the vehicle), measure the distance between the vehicle and an obstacle whilst reversing.

This measurement is indicated by beeps which become more frequent the closer you come to the obstacle, until they become a continuous beep when the vehicle is approximately 30 centimetres from the obstacle.

NB: make sure that the ultrasonic sensors are not obscured (by dirt, mud, snow, etc.).

Operation

When reverse gear is selected, most objects which are less than approximately 1.20 metres from the rear of the vehicle are detected, a beep sounds and, depending on the vehicle, the display ***1*** comes on.

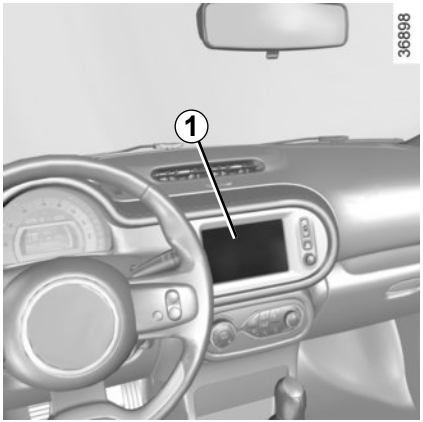

This function is an additional aid that indicates the distance between the vehicle and an obstacle whilst reversing, using sound signals.

Under no circumstances should it replace the driver's care or responsibility whilst reversing.

The driver should always look out for sudden hazards during driving: always ensure that there are no moving obstacles (such as a child, animal, pram or bicycle, etc.) or small, narrow objects such as stones or posts in your path when manoeuvring.

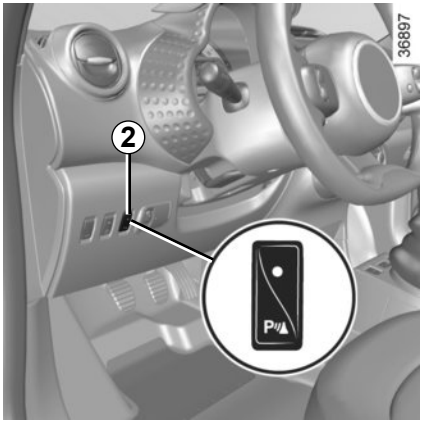

Deactivating the system

Press switch ***2*** to deactivate the system:

The indicator light built into the switch lights up to remind you that the system is deactivated.

Pressing the switch again will reactivate the system and switch off the indicator light.

Depending on the vehicle, you can deactivate the parking distance control from the touch-screen. Please see the equipment instructions for further information.

An impact to the underside of the vehicle while manoeuvring (e.g.: striking a post, raised kerb or other street furniture) may result in damage to the vehicle (e.g.: deformation of an axle).

To avoid any risk of accident, have your vehicle checked by an approved Dealer.

REVERSING CAMERA (1/2)

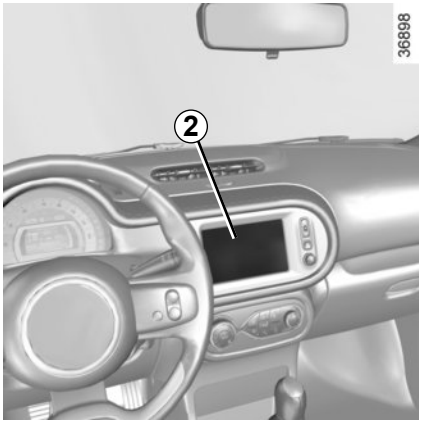

Operation

When going into reverse gear (and up to around 5 seconds after shifting into another gear), the camera ***1*** placed next to the lights transmits a view of the rear surroundings of the vehicle on the touch screen ***2***, accompanied by a mobile and fixed gauge.

This system is initially used with the aid of several gauges (mobile for trajectory and fixed for distance). When the red zone is reached, use the bumper image to stop accurately.

Note:

– ensure that the reversing camera is not obscured (dirt, mud, snow, etc.);
– depending on the vehicle, certain settings can be adjusted from the touch screen ***2***. Refer to the handbook for the equipment.

This function is an additional aid. It cannot, therefore, under any circumstances replace the vigilance or the responsibility of the driver.
The driver should always pay attention to sudden incidents during driving: always ensure that there are no moving obstacles (such as a child, animal, pram, bicycle, etc.) or small, narrow objects such as stones or posts in your path when manoeuvring.

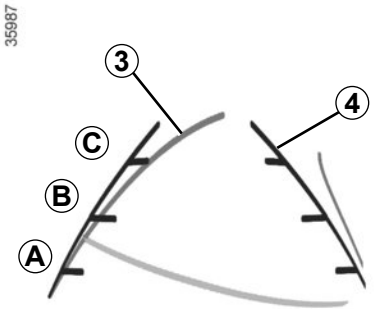

Dynamic gauge *3* (depending on the vehicle)

This is shown in blue on screen ***2***. It indicates the vehicle trajectory according to the position of the steering wheel.

Static guide line *4*:

The fixed clearance gauge comprises coloured markers ***A***, ***B*** and ***C***, indicating the distance behind the vehicle:

– ***A*** (red) approximately 30 centimetres from the vehicle;
– ***B*** (yellow) approximately 70 centimetres from the vehicle;
– ***C*** (green) approximately 150 centimetres from the vehicle.

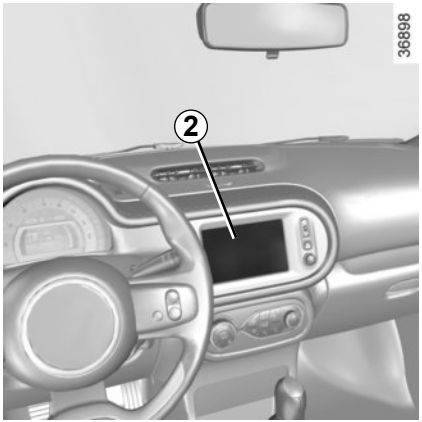

This gauge remains fixed and indicates the vehicle trajectory if the wheels are in line with the vehicle.

This function is an additional aid. It cannot, therefore, under any circumstances replace the vigilance or the responsibility of the driver.
The driver should always pay attention to sudden incidents during driving: always ensure that there are no moving obstacles (such as a child, animal, pram, bicycle, etc.) or small, narrow objects such as stones or posts in your path when manoeuvring.

The screen shows a reverse image.
The frames are a representation projected onto flat ground; this information must not be taken into account when superimposed on a vertical object or an object on the ground.
Objects which appear on the edge of the screen may be deformed.
In very bright light (snow, vehicle in sunshine etc.), the camera vision may be adversely affected. If the boot is open or poorly closed, the warning light appears on the instrument panel and, depending on the vehicle, the camera display disappears.

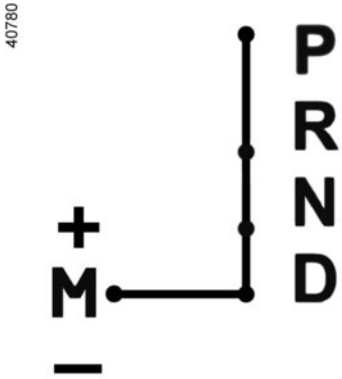

Selector lever *1*

P: park

R: reverse

N: neutral

D: automatic mode

M: manual mode

***3*:** zone displaying gearbox mode or gear engaged in manual mode

Note: press button ***2*** to go from position **D** or **N** to **R** or **P**.

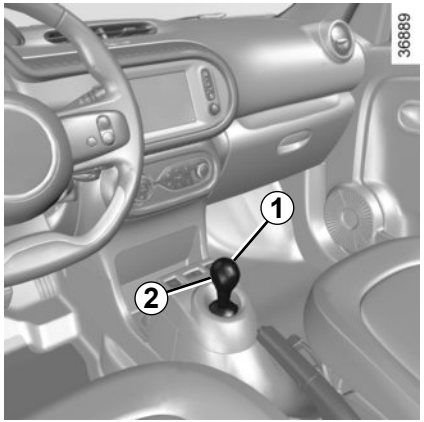

Operation

With gear lever ***1*** in position **P**, start the engine.

To move out of that position, you must depress the brake pedal (the warning light on the display ***4*** comes on) before pressing the unlocking button ***2***.

With your foot on the brake pedal (warning light in display ***4*** goes out), move the lever out of position **P**.

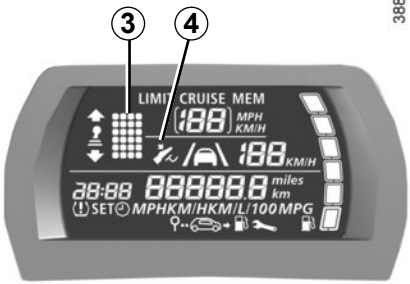

Only engage D or R when the vehicle is stopped, with your foot on the brake and the accelerator pedal released.

Driving in automatic mode

Select position **D**. In most traffic conditions, you will not have to touch the gear selector lever again: the gears will change automatically at the right time and at the most suitable engine speed because the automatic system takes into account the vehicle load and road contour and adjusts itself to the particular driving style you have chosen.

Economical driving
When driving, always leave the lever in position **D**, keeping the accelerator pedal lightly depressed to ensure automatic gear changes at a lower engine speed.

Accelerating and overtaking
Depress the accelerator pedal firmly and fully (so that it goes beyond the kickdown point).

This will enable you to change down to the optimum gear within the engine range.

Driving in manual mode

With the selector lever in position **D**, move the lever to the left. Shifting the lever repeatedly allows you to change gears manually:

– To move down through the gears, push the lever backwards;

– To move up through the gears, push the lever forwards.

The gear selected is displayed on the instrument panel.

Special cases

Under certain driving conditions (e.g. engine protection, electronic stability program (ESP) operational etc.: ESC)) the automatic system may change the gear automatically.

Likewise, to prevent incorrect manoeuvres, a gear change may be refused by the automatic system: in this case the gear display flashes for a few seconds as a warning.

Special circumstances

- **If the road contours and bends** do not allow you to stay in automatic mode (e.g.: in the mountains), we recommend that you change to manual mode.
  This will prevent the automatic gearbox from changing gears repeatedly when climbing, and permit engine braking on long descents.
- **In cold weather,** to prevent the engine from stalling, wait a few moments before shifting the selector lever from position **P** or **N** and engaging **D** or **R**.

In very cold weather, the system may prevent the gears from being shifted in manual mode until the gearbox reaches the right temperature.

Parking the vehicle

When the vehicle is stopped, move the lever to position **P** while keeping your foot on the brake pedal: the gearbox is in neutral and the drive wheels are mechanically locked by the driveshaft.

Apply the handbrake.

An impact to the underside of the vehicle while manoeuvring (e.g.: striking a post, raised kerb or other street furniture) may result in damage to the vehicle (e.g.: deformation of an axle).

To avoid any risk of accident, have your vehicle checked by an approved Dealer.

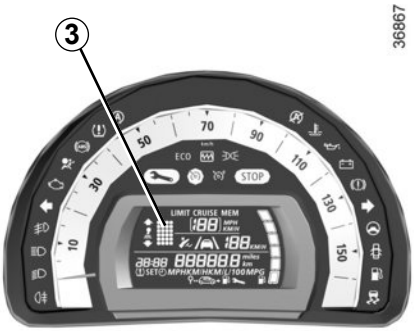

Operating faults

When three horizontal bars on the display ***3*** come on accompanied by the warning light or STOP, this indicates a gearbox fault. Contact an authorised dealer as soon as possible.

Warning light STOP requires you to stop immediately, for your own safety, as soon as traffic conditions allow.

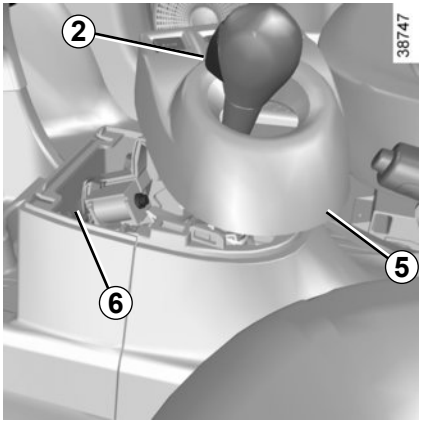

Breakdown of a vehicle with an automatic gearbox
Please refer to the information on “Towing” in Section 5.

When setting off, if the lever is locked in position **P**, even though you are depressing the brake pedal and pressing the unlocking button ***2***, the lever can still be released manually.

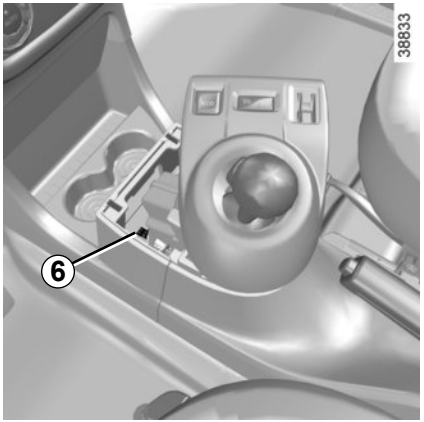

To do this, unclip the base of the gear lever ***5*** starting on the side below the air conditioning controls. Then raise the button ***6*** and simultaneously press the unlock button ***2*** on the lever.

For safety reasons, do not switch off the ignition before the vehicle has come to a complete standstill.

Section 3: Your comfort

Air vents . . . 3.2
Manual air conditioning, heating system . . . 3.4
Automatic climate control . . . 3.7
Air conditioning: information and advice on use . . . 3.11
Electric windows . . . 3.13
Sunroof . . . 3.15
Interior lighting . . . 3.16
Passenger compartment storage/fittings . . . 3.17
Ashtray, cigarette lighter, accessories socket . . . 3.22
Rear headrests . . . 3.23
Rear bench seat . . . 3.24
Luggage compartment . . . 3.25
Luggage cover . . . 3.26
Rear parcel shelf . . . 3.26
Boot storage . . . 3.27
Transporting objects in the luggage compartment . . . 3.28
Roof bars . . . 3.29
Spoiler . . . 3.29
Multimedia equipment . . . 3.30

AIR VENTS, air outlets (1/2)

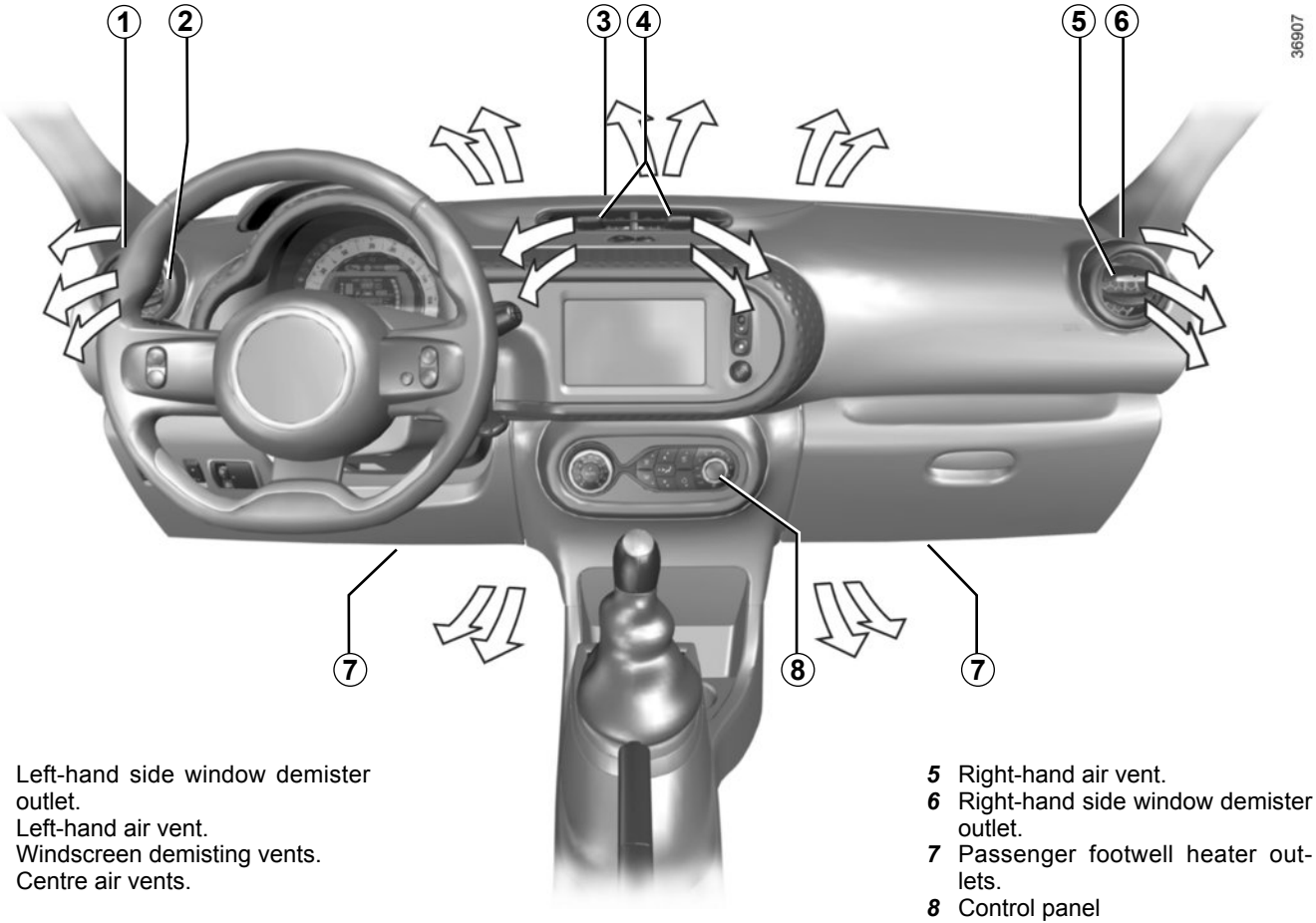

1 Left-hand side window demister outlet.
2 Left-hand air vent.
3 Windscreen demisting vents.
4 Centre air vents.
5 Right-hand air vent.
6 Right-hand side window demister outlet.
7 Passenger footwell heater outlets.
8 Control panel

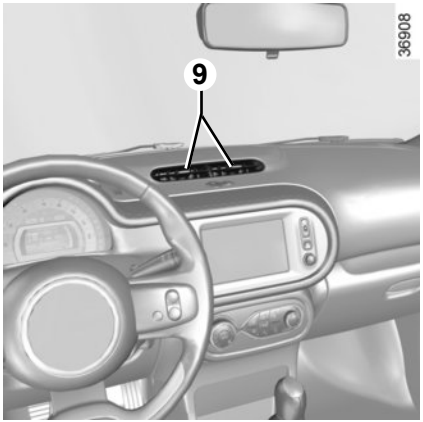

Centre air vents.

Direction

Move cursors ***9*** to the required position.

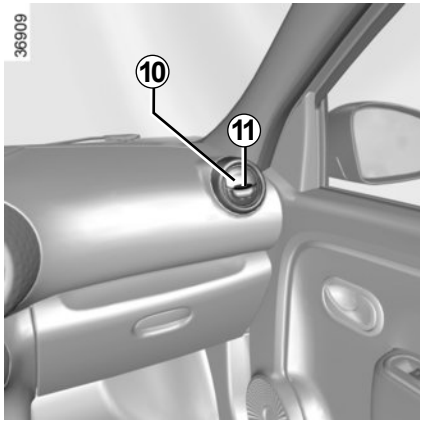

Side air vents

Air flow

To open air vent ***10***, press on the air vent (point ***11***) until it is open as far as required.

Direction

To direct the air flow, swivel side air vent ***10***.

Do not add anything to the vehicle's ventilation circuit (for example, to remove bad odours).

There is a risk of damage or of fire.

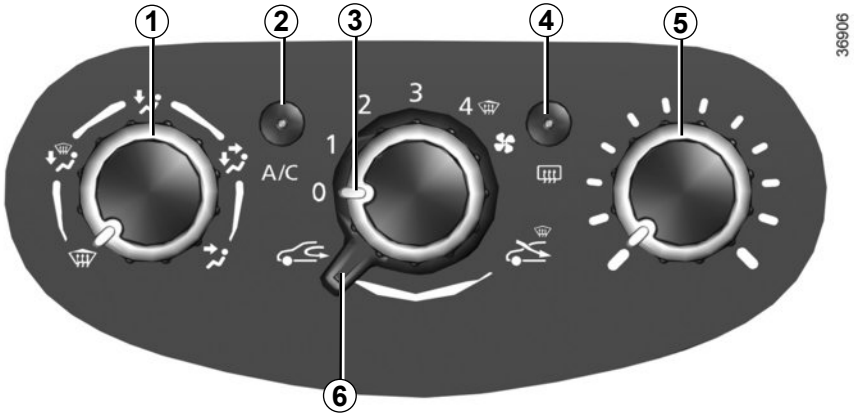

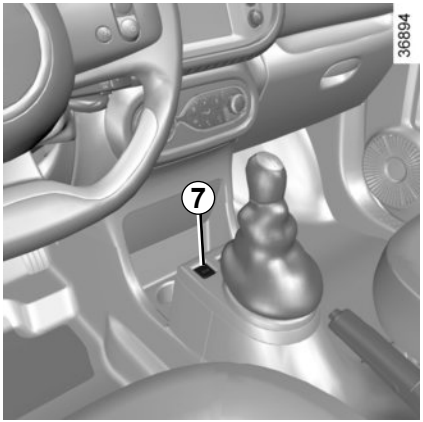

The controls
(depending on vehicle)

1 Distribution of air in the passenger compartment.

2 Air conditioning.

3 Adjusting the ventilation speed.

4 De-icing/demisting of the rear screen and, depending on the vehicle, the door mirrors.

5 Adjusting the air temperature.

6 Air recirculation.

Switching air conditioning on or off

The air conditioning is switched on (warning light on) or off (warning light off) using button ***2***.

The system cannot be switched on if the control ***3*** is set to “0”.

The air conditioning system is used for:

– lowering the temperature inside the passenger compartment;

– eliminating condensation more quickly.

Vehicles fitted with the ECO mode **(switch *7*)**: when activated, ECO mode can reduce the performance of the heating and/or air conditioning. Please refer to the information on “Driving advice, Eco-driving” in Section 2.

Distribution of air in the passenger compartment

Turn the control ***1*** to choose the distribution option.

The air flow is directed to the windscreen and the front side window demisting vents.

The air flow is distributed between all the air vents, the front side window demisting vents, the windscreen demisting vents and the footwells.

The air flow is directed mainly towards the footwells.

The air flow is directed towards the dashboard air vents and the front footwells.

All the air flow is directed to the dashboard vents.

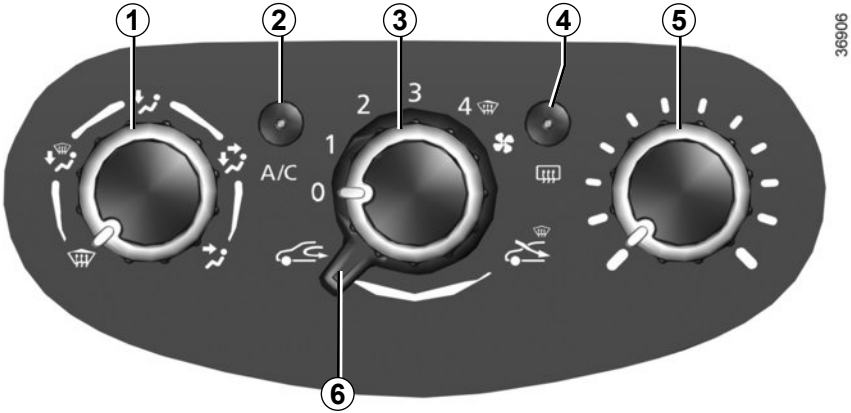

Switching the air recirculation on

Push the control ***6*** to the left. In these conditions, air is taken from the passenger compartment and is recycled, with no air being taken from outside the vehicle.

Air recirculation is for:

– isolating the vehicle from the external atmosphere (driving in polluted areas, etc.).

– to bring the passenger compartment to the desired temperature as quickly as possible.

Prolonged use of air recirculation can lead to condensation forming on the side windows and windscreen, and discomfort due to the use of non-renewed air in the passenger compartment.
We therefore advise you to return to normal mode (external air) as soon as the air recirculation function is no longer required, by pressing the button ***6*** again.

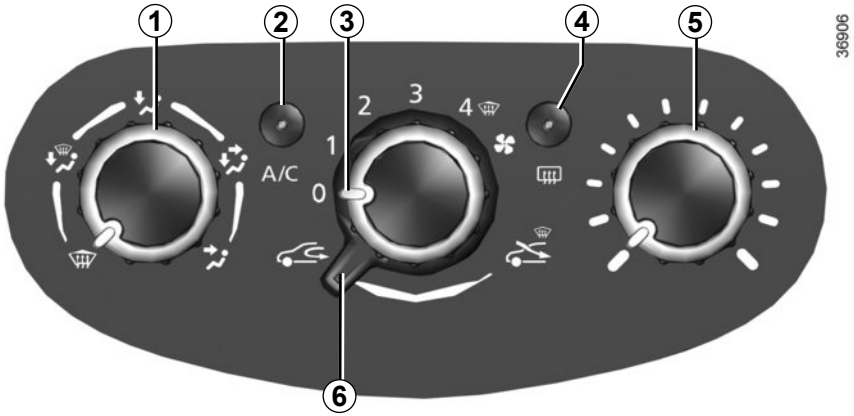

Adjusting the amount of air blown into the passenger compartment

Move control ***3***. The further the control is positioned to the right, the greater the amount of air blown into the passenger compartment.

Demisting

To activate demisting, position controls ***1*** and ***3*** to position , and control ***6*** to position . If demisting remains incomplete, press button ***2*** to use the air conditioning.

Note: the air conditioning is not operational below 2°C.
If you want to shut off the flow of air, set the control ***3*** to “0”. The system is deactivated: the ventilation speed is zero (vehicle stationary). You can, however, still feel a slight flow of air when the vehicle is moving.

Prolonged use of position “0” can lead to condensation forming on the side windows and windscreen and problems due to the use of non-renewed air in the passenger compartment.

Adjusting the air temperature

Turn the control ***5*** to obtain the desired temperature. The further towards the red the slide is, the higher the temperature will be.
When the air conditioning system is used for long periods, it may begin to feel cold. To increase the temperature, turn the control ***5*** to the right.

Rear screen de-icing/ demisting

With the engine running, press button ***5***. The integrated indicator light comes on.
This function permits rapid demisting/ de-icing of the rear screen and de-icing of the door mirrors (on equipped vehicles).
To exit this function, press button ***4*** again.
Demisting automatically stops.

AUTOMATIC CLIMATE CONTROL (1/4)

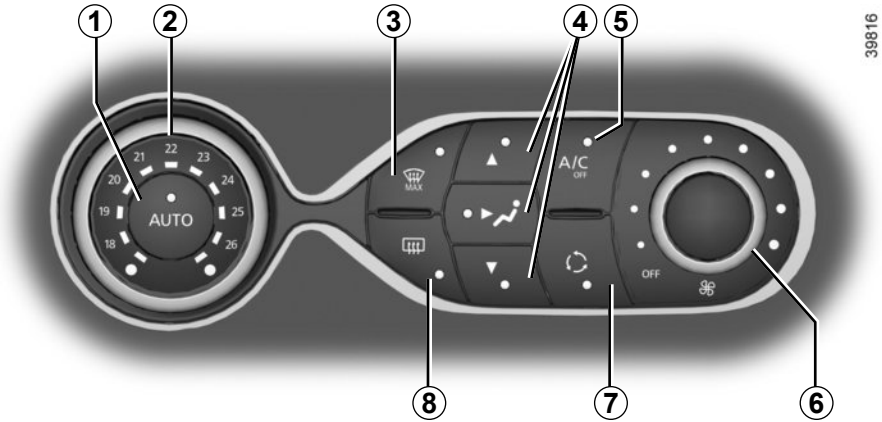

The controls

1 Automatic mode.

2 Air temperature adjuster.

3 “Clear View” function.

4 Passenger compartment air distribution adjustment.

5 Air conditioning control.

6 Adjusting the ventilation fan speed.

7 Air recirculation.

8 De-icing/demisting of the rear screen and, depending on the vehicle, the door mirrors.

Automatic mode

The automatic climate control system guarantees comfort in the passenger compartment and good visibility (except in the event of extreme conditions), while optimising consumption. The system controls the ventilation speed, air distribution, air recirculation, and starting and stopping the air conditioning and air temperature.

AUTO: allows the selected comfort level to be best attained, depending on the exterior conditions. Press button ***1***.

Varying the ventilation speed

In automatic mode, the system uses the most suitable amount of air to reach and maintain the desired comfort level.

You can still adjust the ventilation speed by turning control ***6*** to increase or reduce the ventilation speed.

Adjusting the air temperature

Turn control ***2*** to obtain the desired temperature.

Turning the control to the right increases the temperature.

Special note: the maximum and minimum settings allow the system to produce a minimum or maximum temperature (18°C and 26°C).

Clear View function

Press button ***3*** – the integrated indicator light comes on.

This function quickly demists and de-ices the windscreen, the rear screen, the front side windows, and the door mirrors (depending on the vehicle). The air conditioning and rear screen de-icing functions must be activated.

Press button ***8*** to stop the heated rear screen operating, and the integrated indicator goes out.

To exit this function, press button ***3*** or ***1***.

Some buttons have an operating tell-tale which indicates the operating status.

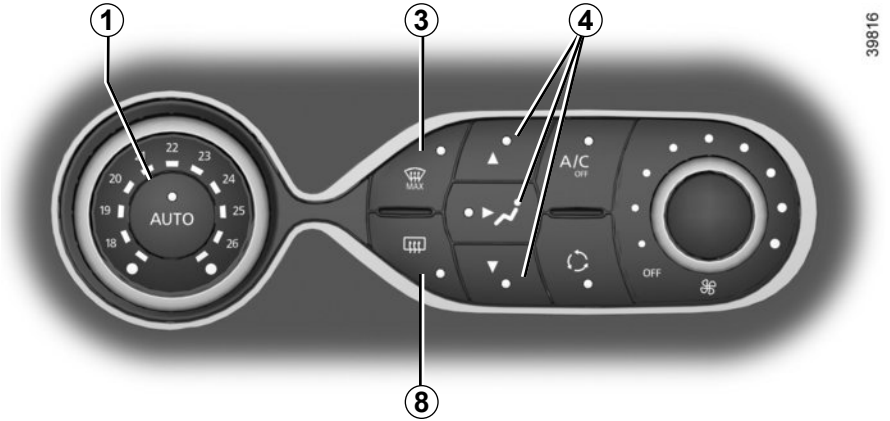

Adjusting the distribution of air in the passenger compartment

Press one of the buttons ***4***. The integrated warning light in the button comes on.

It is possible to combine two positions simultaneously – press both buttons ***4***.

The air flow is distributed between all the air vents, the front side window demisting air vents and the windscreen demisting vents.

The air flow is mainly directed to the dashboard air vents.

The air flow is directed mainly towards the footwells.

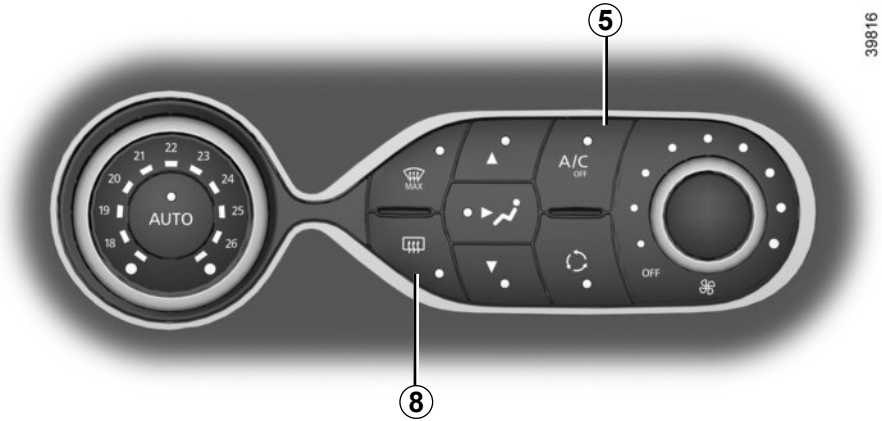

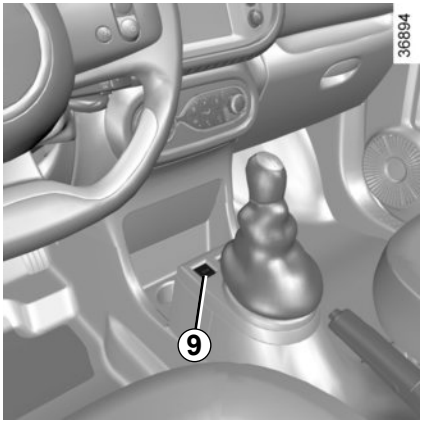

Rear screen de-icing/ demisting

Press button ***8*** – the integrated indicator light comes on. This function enables rapid demisting or de-icing of the rear screen and de-icing of the door mirrors (on equipped vehicles).

To exit this function, press button ***8*** again. Demisting automatically stops.

Switching air conditioning on or off

In automatic mode, the system switches the air conditioning system on or off, depending on the climate conditions.

Press button ***5*** to switch off the air conditioning; the integrated indicator comes on.

Vehicles fitted with the ECO mode **(switch *9***): once activated, ECO mode can reduce the performance of the automatic air conditioning. Please refer to the information on “Eco-driving” in Section 2.

Air recirculation (isolation of the passenger compartment)

This function is managed automatically (operation is confirmed by a warning light on button ***7***), but you can also activate it manually.

NB:
- during recirculation, air is taken from the passenger compartment and is recycled, with no air being taken from outside the vehicle;
- air recirculation allows the external atmosphere to be cut off (when driving in polluted areas, etc.);
- the recirculation of air makes it possible to reach the desired passenger compartment temperature quicker.

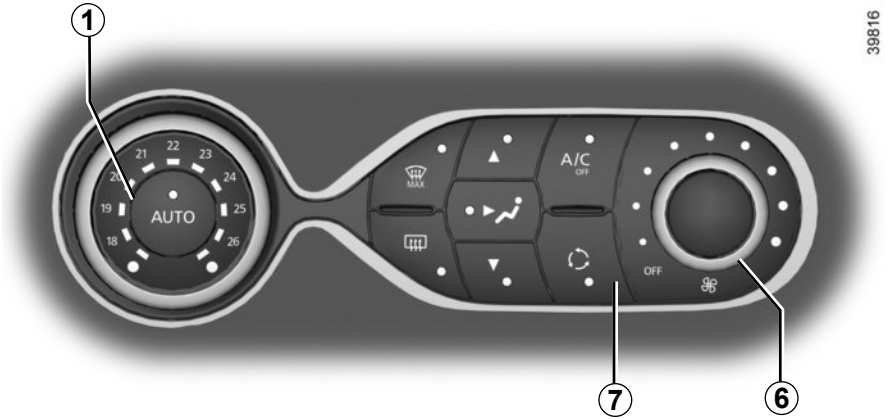

Manual use

Press button ***7*** – the integrated indicator light comes on.

Prolonged use of this position may lead to odours, caused by non-renewal of air, and the formation of condensation on the windows.

We therefore advise you to return to automatic mode as soon as air recirculation is no longer needed, by pressing button ***7***.

To exit this function, press button ***7*** again.

Stopping the system

Turn the control ***6*** to “OFF” to stop the system. To start it, turn the control ***6*** again, then adjust the fan speed or press the button ***1***.

The demisting/de-icing will still take priority over the air recirculation.

Advice on use

In some situations (air conditioning off, air recirculation activated, ventilation speed at zero or low etc.), you may notice that condensation starts to form on the windows and windscreen.

If there is condensation, use the **"Clear View"** function to remove it, then use the air conditioning in automatic mode to stop it forming again.

Vehicles equipped with mode ECO

Once activated, ECO mode may reduce air conditioning performance. Please refer to the information on "Driving advice, Eco-driving" in Section 2.

Do not add anything to the vehicle's ventilation circuit (for example, to remove bad odours).

There is a risk of damage or of fire.

Fuel consumption

You will normally notice an increase in fuel consumption (especially in town) when the air conditioning is operating.
For vehicles fitted with air conditioning with no automatic mode, switch off the system when it is not required.

Advice for reducing consumption and helping to preserve the environment
Drive with the air vents open and the windows closed. If the vehicle has been parked in the sun, open the doors for a few moments to let the hot air escape before starting the engine.

Maintenance

Refer to the Maintenance Document for your vehicle for the inspection frequency.

Use the air conditioning system regularly, even in cold weather, running it at least once a month for approximately 5 minutes.

Operating faults

As a general rule, contact your approved dealer in the event of an operating fault.

- **Reduction in de-icing, demisting or air conditioning performance.** This may be caused by the passenger compartment filter cartridge becoming clogged.
- **No cold air is being produced**. Check that the controls are set correctly and that the fuses are sound. Otherwise, switch off the system.

Presence of water under the vehicle

After prolonged use of the air conditioning system, it is normal for water to be present under the vehicle. This is caused by condensation.

Do not open the refrigerant fluid circuit. The fluid may damage eyes or skin.

AIR CONDITIONING: information and operating instructions (2/2)

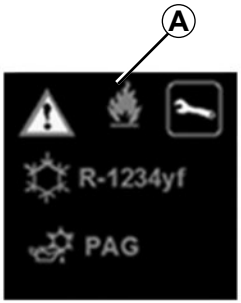

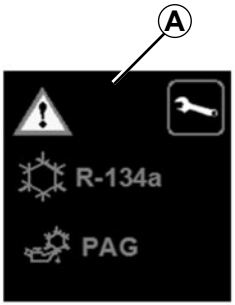

42430

The refrigerant circuit may contain fluorinated greenhouse gases.

Depending on the vehicle, you will find the following information on label ***A*** affixed inside the engine compartment.

The presence and location of the information on label ***A*** depends on the vehicle.

Do not open the refrigerant circuit. The fluid may damage eyes or skin.

Before performing any action in the engine compartment, the ignition must be switched off (please see the information on “Starting, stopping the engine” in Section 2).

Type of refrigerant fluid

Type of oil in the air conditioning circuit

Inflammable product

Consult the driver’s handbook

Maintenance

x.xxx kg	Quantity of refrigerant fluid present in the vehicle.
GWP xxxxx	Global Warming Potential (CO2 equivalent).
CO2 eq x.xx t	Quantity in weight and in CO2 equivalent.

ELECTRIC WINDOWS (1/2)

These systems operate with the ignition on or off, until one of the front doors is opened (limited to about 3 minutes).

Closing windows can cause serious injury.

Driver's responsibility

Never leave your vehicle with the key or remote control in it, leaving a child, adult who is not self-sufficient or a pet inside, even for a short while. They may pose a risk to themselves or to others by starting the engine or activating equipment (such as the gear lever or electric windows). If any part of the body becomes trapped, reverse the direction of the window immediately by pressing the relevant switch.

Risk of serious injury.

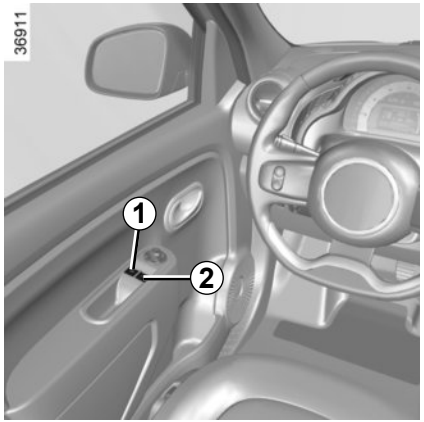

Press the window switch down or lift it up to lower or raise the window to the desired height.

From the driver's seat, use switch:

1 for the driver's side;

2 for the front passenger side.

From the front passenger seat, move the switch ***3***.

Avoid resting any objects against a half-open window: there is a risk that the electric window could be damaged.

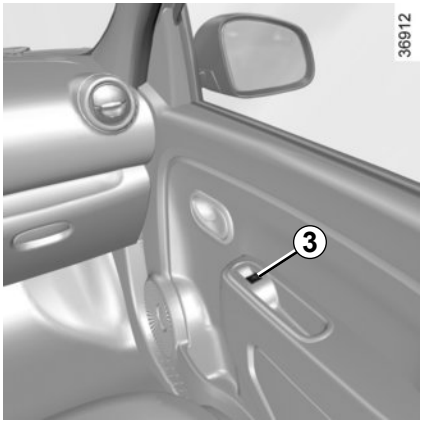

One-touch mode

Depending on the vehicle, this mode works in addition to the operation of the electric windows described previously. It can be fitted to the driver's window. Briefly press or pull the switch ***1*** as far as it will go: the window will wind down or up fully. Pressing the switch again stops the window moving.

Note: if the driver's window detects resistance when closing (e.g. tree branch, etc.), it stops and then lowers again by a few centimetres.

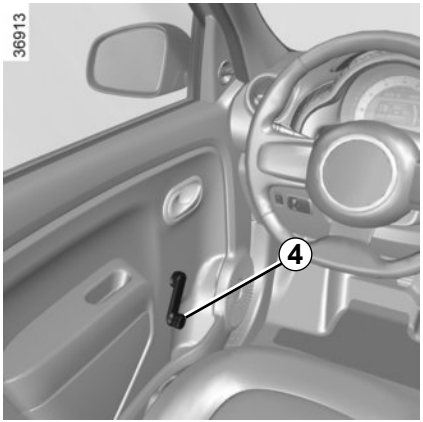

Manual window winders

Move the handle ***4*** to lower or raise the window to the desired height.

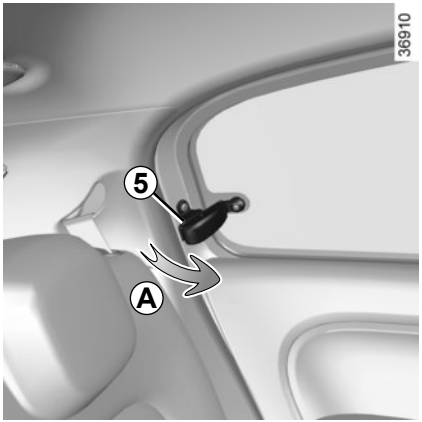

Rear windows

To half-open the window, turn handle ***5*** (movement ***A***) then lock it by pushing the handle to the right.

Make sure it is properly latched into position when it is closed.

Operating faults

Electric windows

In case of a fault when closing a window, the system reverts to normal mode: pull the switch concerned up as often as necessary to fully close the window (the window will close gradually), hold the switch (still on the closure side) for three seconds then lower and raise the window fully to reinitialise the system.

If necessary, contact an approved Dealer.

When closing the windows, ensure that no part of the body (arm, hand, etc.) is protruding from the vehicle.

Risk of serious injury.

– **Partial opening:** press the switch ***1*** on side until the desired amount of opening.

– **Full opening:** press the switch ***1*** on side for around 6 seconds.

– **To close:** press the switch ***1*** on side for around 6 seconds.

Precautions during use

– **check** that the sunroof is properly closed before leaving your vehicle;

– **clean** the seal every three months using products recommended by our Technical Department;

– **Do not open** the sunroof immediately after it has rained or immediately after washing the vehicle.

– **vehicle with roof bars:**

Generally, it is not advisable to operate the sunroof.

Before using the sunroof, check the objects and/or accessories (bike racks, roof boxes, etc.) attached to the roof bars: they should be properly arranged and secured and should not interfere with the operation of the sunroof.

Contact an authorised dealer for details of possible conversions.

Operating faults

If the roof will not close, please consult an authorised dealer.

Driver's responsibility

Never leave your vehicle with the key in the ignition and leaving a child, an adult who is not self-sufficient or a pet inside, even for a short while.

The reason for this is that the child may endanger himself or others by starting the engine, activating equipment such as the window winders for example, or locking the doors.

If something gets caught, immediately reverse the direction of travel by pressing the switch ***1*** on side .

Risk of serious injury.

Courtesy light

Press the switch ***1*** for:

– permanent lighting;

– lighting controlled by the unlocking of the vehicle or by opening one of the doors. This switches off after a time delay, once the doors concerned have been closed correctly;

– lighting switches off immediately.

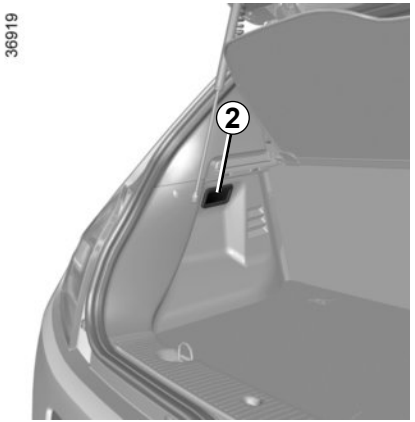

Boot light *2*

It comes on when the boot is opened.

Unlocking and opening the doors or tailgate switches on the timed courtesy lights and lights.

With the doors properly shut, locking or starting the engine make the interior lights and the courtesy lights go out.

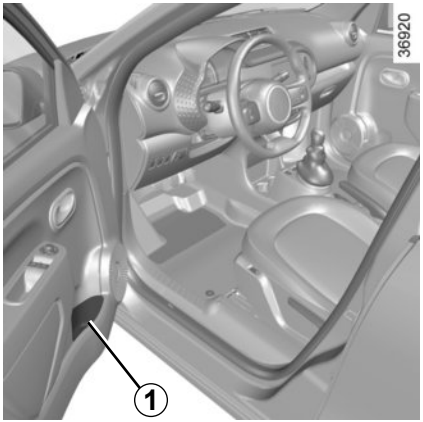

Front door storage pockets *1*

They can hold a 1.5-litre bottle.

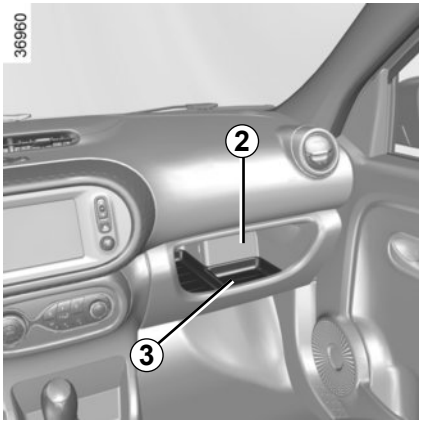

Dashboard storage *2*

Depending on the vehicle, it may be fitted with a storage compartment ***3***.

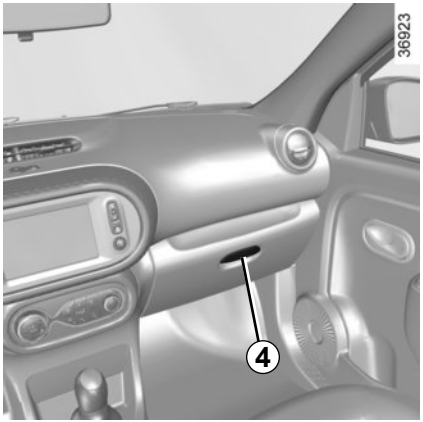

Glovebox

When closed with a cover, lift the catch ***4*** to open the glovebox.

The cover is fitted with storage areas.

Nothing should be placed on the floor area in front of the driver as such objects may slide under the pedal during braking manoeuvres, thus obstructing its use.

Ensure that no hard, heavy or pointed objects are placed in the “open” storage compartments in such a way that they may fall onto passengers during sudden turning, braking or in the event of an accident.

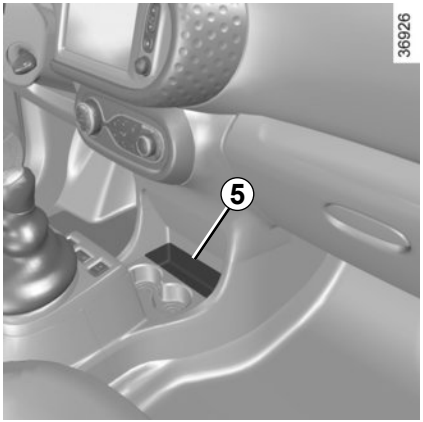

Centre console storage compartment *5*

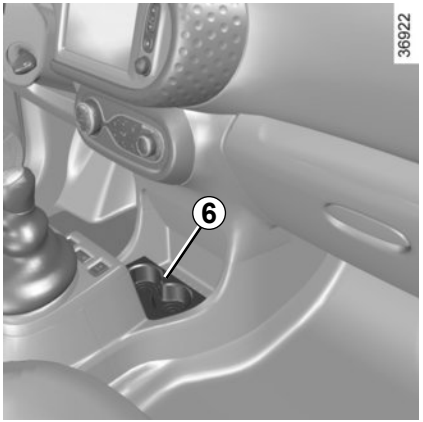

Cup holder *6*

This can be used for storing a mobile ashtray, drinks cans, etc.

When turning corners, accelerating or braking, ensure that the receptacle being held by the cup holder is not dislodged.

There is a risk of injury if hot liquid escapes.

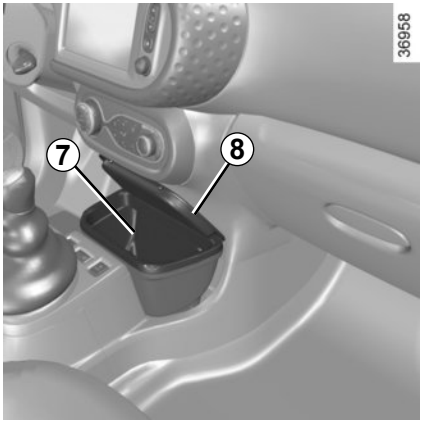

Centre console storage compartment *7*

Depending on the vehicle, it is closed with a cover ***8***.

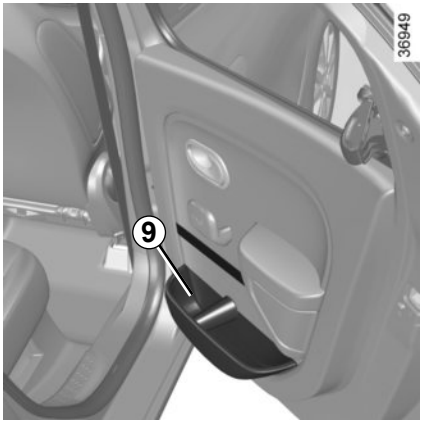

Rear door storage compartment *9*

Storage compartments can hold a 1.5 litre bottle.

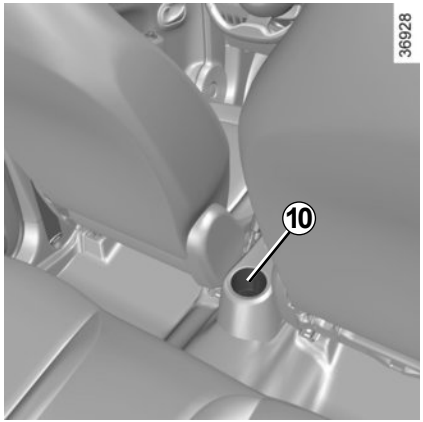

Cup holder *10*

This can be used for storing a mobile ashtray, cup holder, etc.

When turning corners, accelerating or braking, ensure that the receptacle being held by the cup holder is not dislodged.

There is a risk of injury if hot liquid escapes.

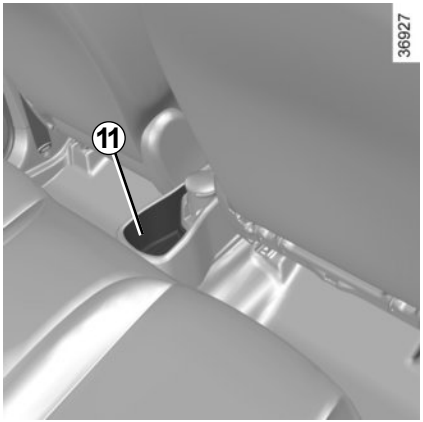

Rear centre console storage compartment *11*

Ensure that no hard, heavy or pointed objects are placed in the “open” storage compartments in such a way that they may fall onto passengers during sudden turning, braking or in the event of an accident.

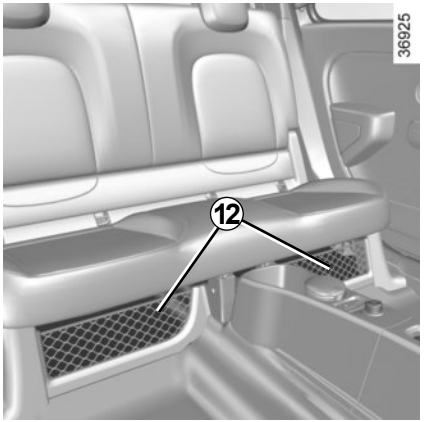

Storage compartment under the rear bench seat *12*

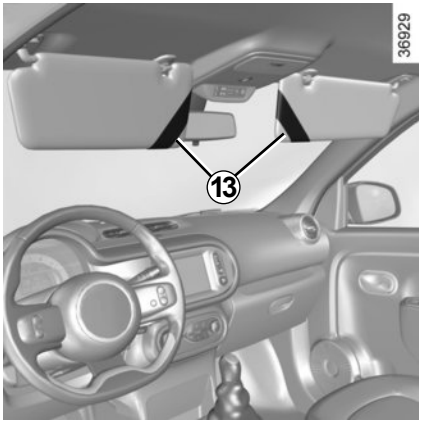

Sun visor storage *13*

This can be used for storing motorway tickets, cards, etc.

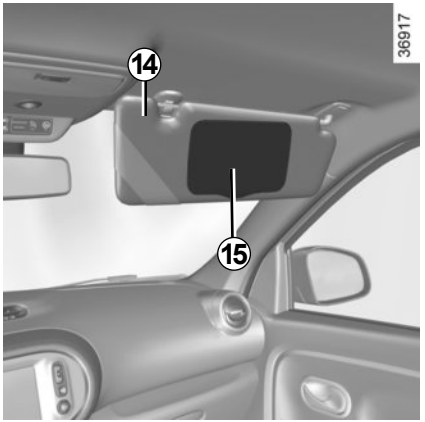

Front sun visor

Lower sun visor ***14***.

Vanity mirror

Lift the cover ***15***.

When driving, ensure the courtesy mirror cover is closed. Risk of injury.

Driver sunglasses holder *16*

Passenger grab handle *17*

This offers support and can be held when the vehicle is moving. Do not use it for getting into or out of the vehicle.

Ashtray *A*

It can be housed in either position ***1*** or ***3***.

Cigarette lighter *2*

With the ignition on, push in the cigarette lighter ***2***. It will spring back with a click when it is ready. Pull it out to use.

After use, replace it without pushing it all the way in.

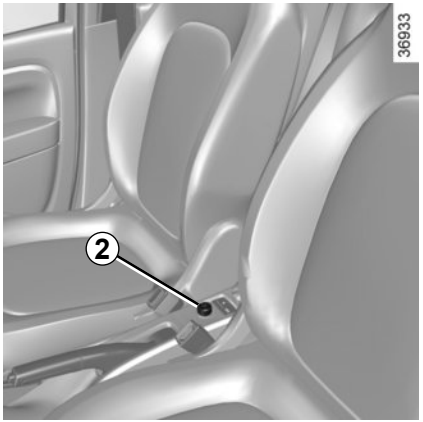

Accessories socket *2*

It is provided for connecting accessories approved by our Technical Department.

If your vehicle is not fitted with a cigar lighter and an ashtray, these can be obtained from an approved Dealer.

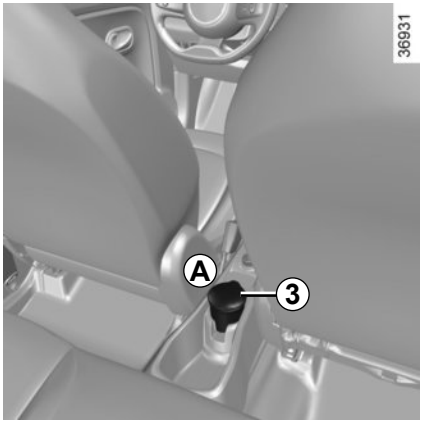

Connect accessories with a maximum power of 120 watts (12 V) only.

When several accessory sockets are used at the same time, the total power of the connected accessories must not exceed 180 watts.

Fire hazard.

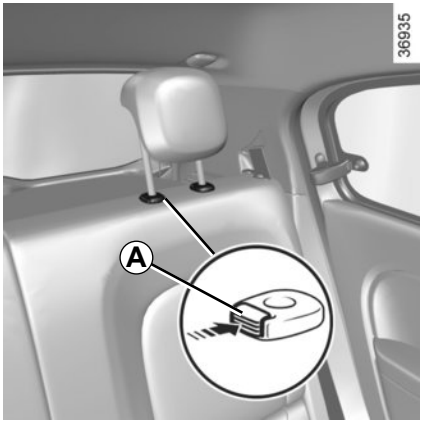

Position for use

Raise the headrest as far as possible to use it in the high position. Check that it is correctly locked.

Storage position

Press button ***A*** and lower the headrest completely.

When the headrest is set at the lowest position, this is for storage only. It should not be in this position when a seat is occupied.

To raise the headrest

Raise the headrest as far as it will go, then press button ***A*** and remove the headrest.
If necessary, fold the seatback down to take out the headrest (see the information on the “Rear bench seat” in Section 3).

To refit the headrest

Enter the rods in their housing and push down the headrest until it locks to use it in the high position. Check that it is correctly locked.

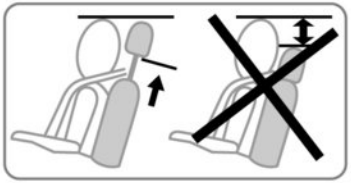

The headrest is a safety component; check that it is fitted and in the correct position. The top of the headrest should be as close as possible to the top of the head.

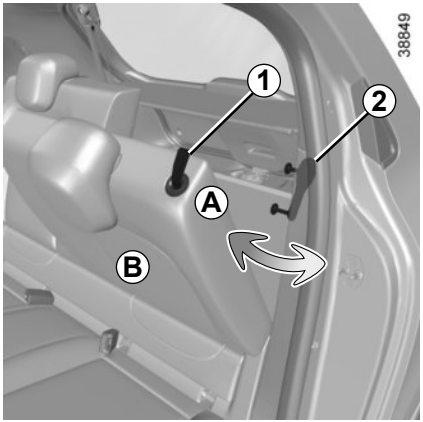

To fold down the seatback:
- Ensure that the front seats are far enough forward;
- Lower the headrest as far as it will go;
- Place the seat belts in their guides ***A***;
- Pull the tab ***1*** upwards and lower the seatback ***B***.

To raise the seatback again, proceed in the reverse order. Ensure that it is properly secured in place.

Refit the seatback and click it back into place.

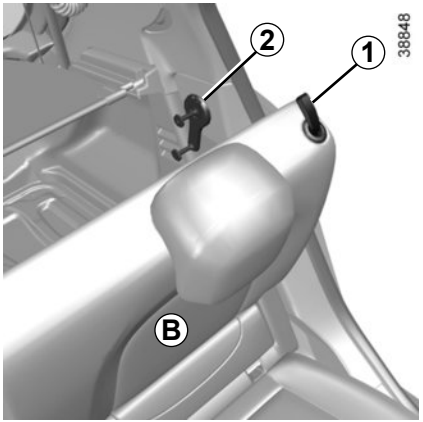

Increasing the luggage compartment volume (depending on the vehicle).

The seatback can be positioned upright in order to increase the luggage compartment volume:
- pull the tab ***1*** and lower the seatback ***B***;
- Lift the lever ***2***;
- lift the seatback ***B*** and click it onto the rod ***2***, ensuring that it is properly locked in place.

To return to the initial position:
- pull the tab ***1*** and lower the seatback ***B***;
- lower the rod ***2*** as far as it will go;
- raise the seatback ***B*** and make sure it properly locks in place.

For safety reasons, carry out any adjustments when the vehicle is not being driven.

When moving the rear seats, ensure that nothing obstructs the anchorage points (passenger's arm or leg, a pet, gravel, cloth, toys, etc.).

When refitting the seatback, make sure it is correctly locked in place.
If seat covers are fitted, make sure these do not prevent the seatback latch from locking in.
Make sure that the seat belts are positioned correctly.
Reposition the headrests.

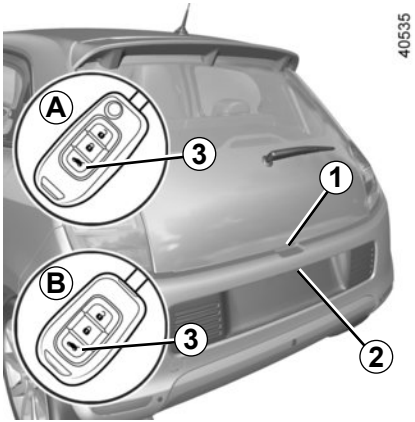

To open

Without remote control

With the doors unlocked, press the button ***2*** and lift the boot lid ***1***.

With remote control

With the doors unlocked or not, press the button ***3*** on the remote control ***A*** or ***B*** for 2 seconds and lift the boot lid ***1***.

In this case, upon closing, the boot will still be unlocked: remember to lock the vehicle before leaving.

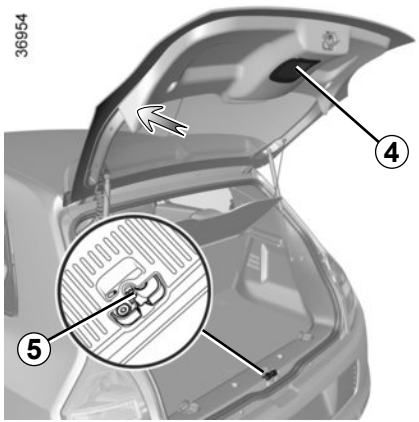

To close

Lower the boot lid using the handle inside the boot ***4*** to assist you.

As the engine is located under the boot carpet, do not slide or store anything under the boot carpet.

Opening the doors manually from the inside

If it is impossible to unlock the tailgate, it can be done manually from inside:

– access the luggage compartment by tilting the rear bench seatback(s),

– insert a pencil or similar object in recess ***5*** and slide the unit as shown in the illustration;

– push the boot lid to open it.

The attaching of any carrying device (bike rack, luggage box, etc.) resting on the luggage compartment lid is prohibited. To install a carrying device on your vehicle, contact an Approved Dealer.

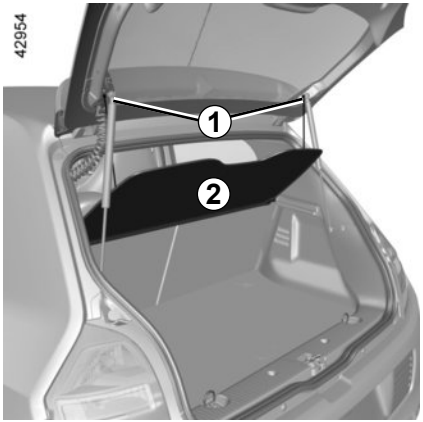

Luggage cover *2*
(depending on vehicle)

The luggage cover lifts automatically when the luggage compartment is opened.

Removal

– Unclip the clips ***1*** from both straps attached to the tailgate struts;
– pull the luggage cover towards you.

Refitting

To refit the luggage cover, proceed in the reverse order to removal.

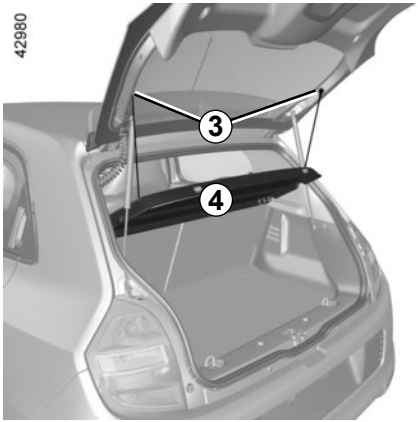

Rear parcel shelf *4*
(depending on vehicle)

The parcel shelf automatically lifts when the luggage compartment is opened.

Removal

– Unhook the two straps ***3***;
– pull the shelf towards you.

Refitting

To refit the parcel shelf, proceed in the reverse order to removal.

Do not place any heavy or solid objects on the luggage cover. These may pose a risk to the vehicle occupants if the driver has to brake suddenly or if the vehicle is involved in an accident.

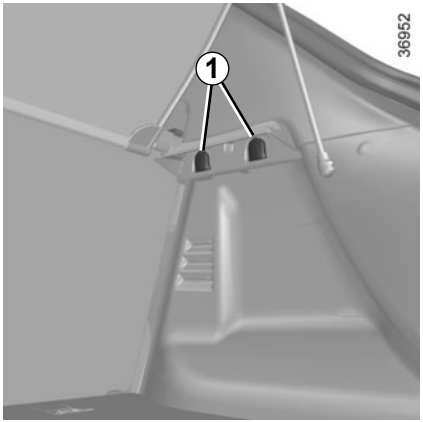

Hooks *1*

These can be used to hang bags.

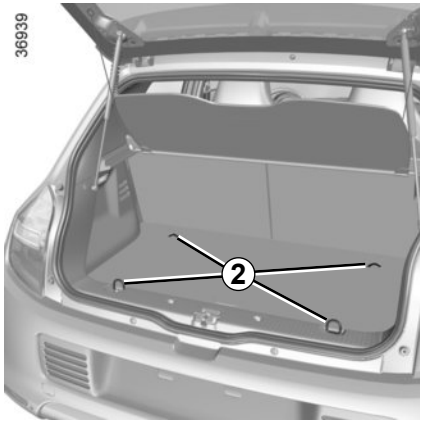

Anchorage points

Attachment points ***2***.

If your vehicle is not equipped with anchorage points, you can get them from an authorised dealer.

As the engine is located under the boot, do not slide or store anything under the boot carpet.

TRANSPORTING OBJECTS IN THE LUGGAGE COMPARTMENT

Always position the objects transported so that the largest surface is against:

– The rear bench seatback for normal loads (example ***A***).

– The front seatbacks with the rear seatbacks folded down, as is the case for maximum loads (example ***B***).

If you have to place objects on the folded seatback, it is necessary that you lower the headrests before folding the seatback so that it can be folded as flat as possible against the seat.

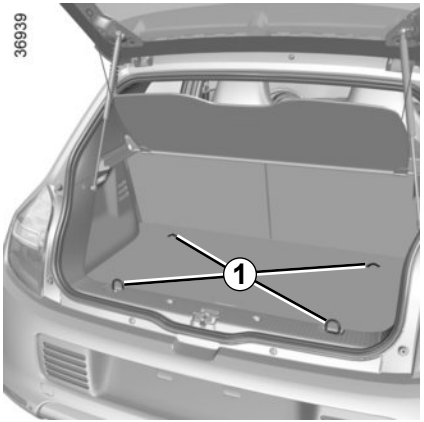

Always position the heaviest items directly on the floor. Use the lashing points ***1*** on the boot floor, if these are fitted to the vehicle. The luggage should be loaded in such a way that no items will be thrown forward and strike the occupants if the driver has to brake suddenly. Fasten the rear seat belts, even if the seats are not occupied.

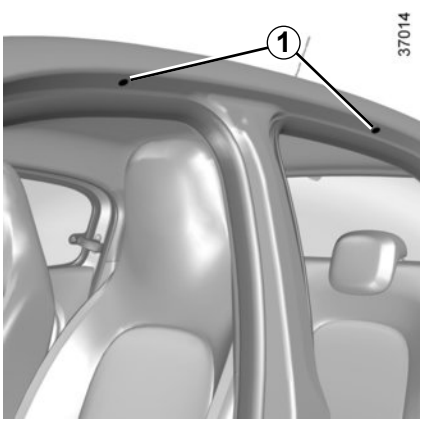

Accessing the mounting points

Open the doors to access the mounting points ***1***.

If the roof bars, approved by our Technical Department, are supplied with screws, only use these screws for attaching the roof bars to the vehicle.

Precautions during use

Handling the tailgate

Before handling the tailgate, check the objects and/or accessories (bike rack, roof box, etc.) fitted to the roof bars: these must be correctly positioned and secured, so as not to hinder the operation of the tailgate.

For information on the range of equipment adapted to your vehicle, we advise you to consult an approved Dealer.

Refer to the manufacturer's instructions for information on how to fit and use the roof rack bar.

Please keep these instructions with the rest of the vehicle documentation.

Maximum permissible load on roof rack: 60 kg (including the carrying device).

Spoiler *A*

For your safety, it is forbidden to attach objects and/or accessories to the spoiler or the boot of the vehicle.

Risk of injury if the rear windscreen or the spoiler break.

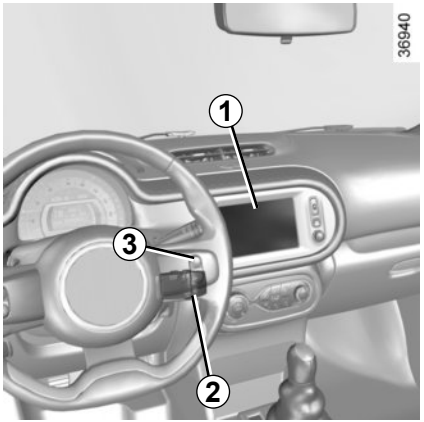

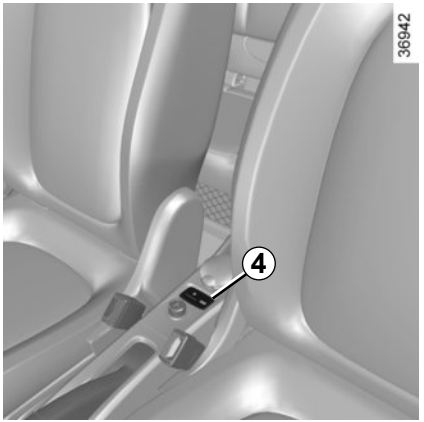

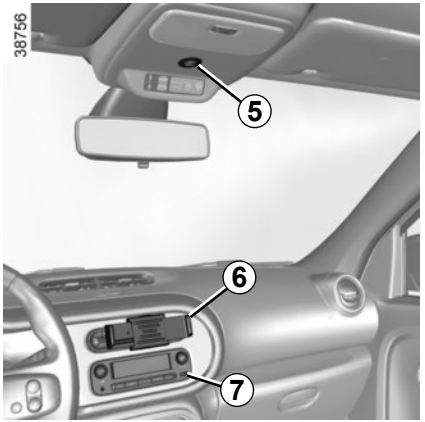

The presence and location of this equipment depends on the vehicle version.

1 Multimedia screen;
2 Steering column control;
3 Voice commands;
4 Multimedia sockets;
5 Microphone;
6 Telephone holder;
7 Multimedia sockets.

Using the telephone

We remind you of the need to conform to the legislation in force concerning the use of such equipment.

Refer to the equipment instructions for information on how to operate this equipment.

Section 4: Maintenance

Engine access flap 4.2
Engine oil level: general information 4.3
Engine oil level: topping up/filling 4.4
Oil change 4.5
Bonnet 4.6
Levels 4.8
engine coolant 4.8
brake fluid 4.9
windscreen washer reservoir 4.10
Filters 4.10
Battery 4.11
Tyre pressure 4.12
Bodywork maintenance 4.14
Interior trim maintenance 4.17

To access the engine:

– open the tailgate;

– remove the boot carpet ***A***;

– unlock the engine access flap.

As the engine is located under the boot, do not slide or store anything under the boot carpet.

Deactivate the Stop and Start function for any operation performed in the engine compartment.

Unlocking the engine access flap

– Unscrew the six screws ***1*** using a flat-blade screwdriver or similar;

– lift the flap;

– place it on a clean surface.

The engine may be hot during operations in close proximity. Risk of injury.

Closing and locking the engine access flap

Check that nothing has been left in the engine compartment.

– Take the flap;

– place it on top of the engine;

– tighten the six screws ***1*** using a flat-blade screwdriver or similar;

– replace the boot carpet ***A***.

Make sure the engine access flap is properly fitted before and during its closure.

Make sure the engine access flap is properly locked in place.

Risk of intoxication from fumes from the engine compartment.

After carrying out any work in the engine compartment, check that nothing has been left behind (cloth, tools, etc.).
These may damage the engine or cause a fire.

ENGINE OIL LEVEL: general information

It is normal for an engine to use oil for lubrication and cooling of moving parts and it is normal to top up the level between oil changes.

However, contact your approved Dealer if more than 0.5 litres is being consumed every 600 miles (1,000 km) after the running in period.

Oil change frequency: check the oil level from time to time and certainly before any long journey to avoid the risk of damaging your engine.

In order to prevent splashback, it is recommended that a funnel be used when topping up/filling with oil.

Deactivate the Stop and Start function for any operation performed in the engine compartment.

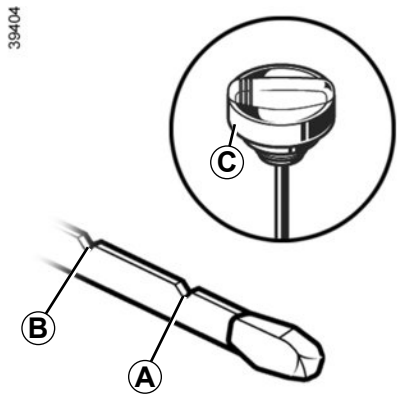

Reading the oil level

The oil level should be read with the vehicle on level ground, after the engine has been switched off for some time.

The dipstick must be used to read the exact oil level and ensure that the maximum level is not exceeded (risk of engine damage). Refer to the following pages.

Consult your approved Dealer at once if you notice an abnormal or repeated drop in any of the fluid levels.

- Remove the dipstick and wipe with a clean, lint-free cloth;
- push the dipstick in as far as it will go (for vehicles equipped with a cap-type dipstick ***C***, screw the cap in as far as it will go);
- take out the dipstick again;
- read the level: it should never go below the “min” ***A*** or above the “max” ***B***.

Once the operation has been completed, ensure that the dipstick is pushed in as far as it will go or that the “cap-type dipstick” is completely screwed in.

Exceeding the maximum engine oil level

Under no circumstances must the maximum fill level ***B*** be exceeded: risk of damage to the engine and catalytic converter.
If the oil level exceeds the maximum level, **do not start your vehicle** and contact an approved Dealer.

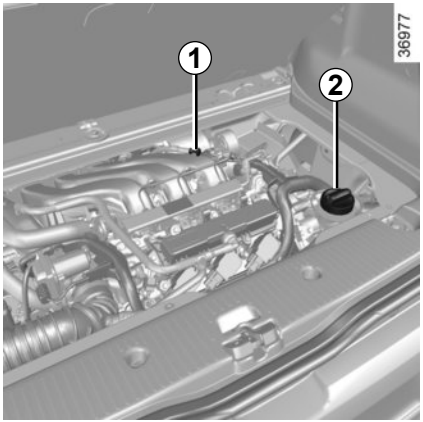

Topping up/filling

The vehicle must be parked on level ground and the engine should be cold (for instance, before the engine is started up for the first time in the day).

– Unscrew the cap ***2***;

– top up the level (as a guide, the capacity between the “MINI” and the “MAXI” reading on the dipstick ***1*** is between 0.20 and 0.24 gallons (0.9 and 1.1 litres) depending on the engine);

– wait for approximately 10 minutes to allow the oil to flow into the engine;

– check the level using the dipstick ***1*** (as described above).

Once the operation has been completed, ensure that the dipstick is pushed in as far as it will go and that the cap is completely screwed in.

In order to prevent splashback, it is recommended that a funnel be used when topping up/filling with oil.

Do not exceed the **“**MAXI**”** level and do not forget to refit the cap ***2*** and the dipstick ***1***.

Exceeding the maximum engine oil level

Under no circumstances must the maximum fill level be exceeded: risk of damage to the engine and catalytic converter.
If the oil level exceeds the maximum level, **do not start your vehicle** and contact an approved Dealer.

Oil change

Service interval: refer to the Maintenance Service Booklet for your vehicle.

Oil change capacity

Please refer to the maintenance document for your vehicle, or contact an authorised dealer.
Always check the engine oil level using the dipstick, as explained previously (it should never fall below the minimum level, or be over the maximum level on the dipstick).

Filling: take care when topping up the oil that no oil drips onto engine components - risk of fire. Remember to refit the cap securely as there is a risk of fire if oil splashes onto hot engine components.

Engine oil grade

Refer to the Maintenance Service Booklet for your vehicle.

Consult your approved dealer at once if you notice an abnormal or repeated drop in any of the fluid levels.

Please note when working close to the engine that it may be hot. The engine cooling fan may also start at any moment. The warning light in the engine compartment reminds you of this.

Risk of injury.

Deactivate the Stop and Start function for any operation performed in the engine compartment.

Never run the engine in an enclosed space as exhaust gases are poisonous.

Engine oil change: if you are changing the oil when the engine is hot, be careful not to scald yourself if the oil overflows.

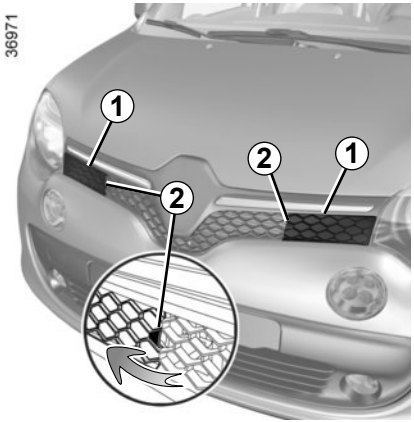

Unlocking the bonnet catch

Unclip each cover ***1*** by holding side ***2***.

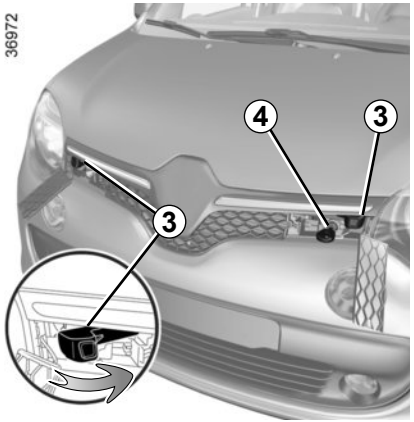

Depending on the vehicle, insert the vehicle key in the lock ***4*** and turn.

Pull the tabs ***3*** as far as they will go to unlock the bonnet.

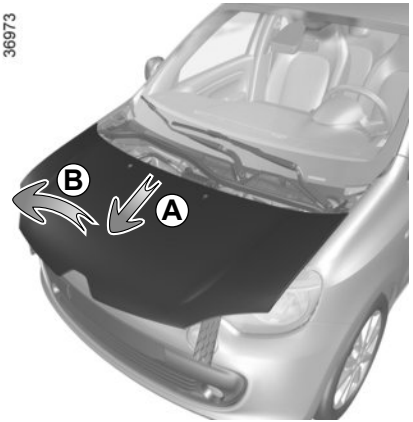

Opening the bonnet

– Pull the bonnet forwards (movement ***A***) as far as it will go;

– lift it by pulling it forwards (movement ***B***).

Please note when working close to the engine that it may be hot. The engine cooling fan may also start at any moment. The warning light in the engine compartment reminds you of this.

Risk of injury.

For your safety, do not remove the bonnet holding straps.

Risk of the bonnet falling on the road surface.

Closing the bonnet

Slide the bonnet back until it closes (movement ***C***).

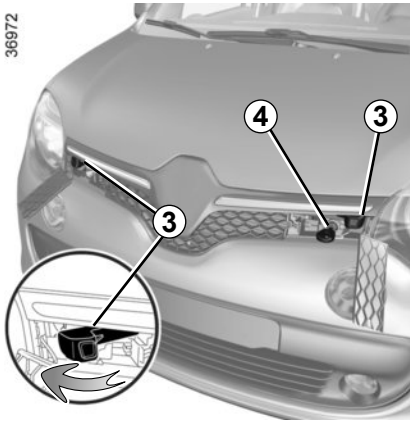

Locking the bonnet

- Push the tabs ***3***;
- depending on the vehicle, insert the vehicle key in the lock ***4*** and turn;
- replace the covers ***1***;
- clip them into their housing.

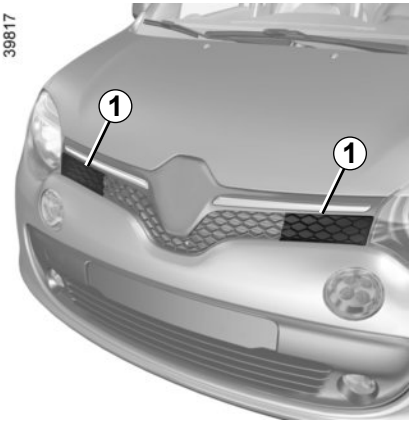

Ensure that the bonnet is properly locked.
Check that nothing is preventing the catch from locking (gravel, cloth, etc.).

In the event of even a slight impact involving the radiator grille or bonnet, have the bonnet lock checked by an approved dealer as soon as possible.

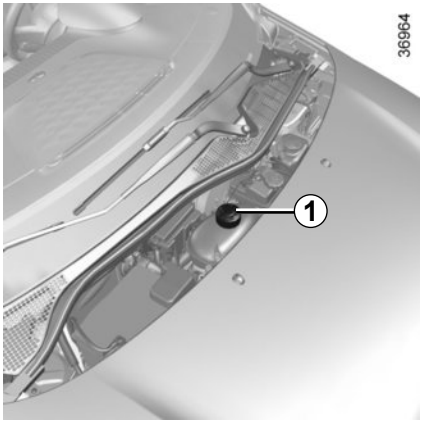

Coolant level

With the engine switched off and on level ground, the level **when cold** must be between the MINI and MAXI marks on reservoir ***1***.

Top this level up **when cold** before it reaches the MINI mark.

When working in the engine compartment, ensure that the windscreen wiper stalk is in the park position.

Risk of injury.

Frequency of checking coolant level

Check the coolant level regularly (very severe damage is likely to be caused to the engine if it runs out of coolant).

If the level needs to be topped up, only use products approved by our Technical Department which ensure:

– protection against freezing;

– an anti-corrosion protection for the cooling system.

No operations should be carried out on the cooling circuit when the engine is hot.

Risk of burns.

Replacement interval

Refer to the Maintenance Document for your vehicle.

Before performing any action in the engine compartment, the ignition must be switched off (please see the information on “Starting, stopping the engine” in Section 2).

For your safety, do not remove the bonnet holding straps.

Risk of the bonnet falling on the road surface.

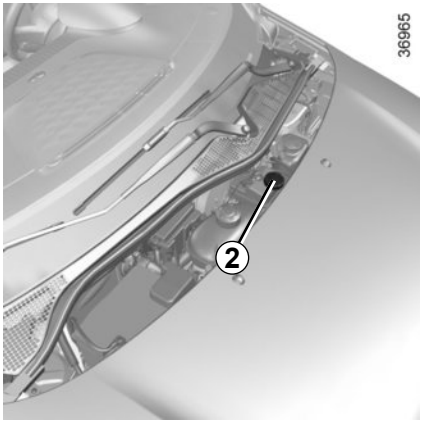

Brake fluid level

The level should be read with the engine switched off and on level ground.

This should be checked frequently, and immediately if you notice even the slightest loss in braking efficiency.

Level 2

It is normal for the level to drop as the brake shoes become worn, but it must never drop lower than the "**MINI**" warning line.

If you wish to check the disc and drum wear yourself, you should obtain the document explaining the checking procedure from the manufacturer's network or web site.

Topping up

After any operation on the hydraulic circuit, a specialist must replace the brake fluid.

Only use fluids approved by our Technical Department (and taken from a sealed container).

Replacement interval

Refer to the Maintenance Document for your vehicle.

If there is an abnormal or repeated drop in the fluid level, please consult an authorised dealer.

Please note when working close to the engine that it may be hot. The engine cooling fan may also start at any moment. The warning light in the engine compartment reminds you of this.

Risk of injury.

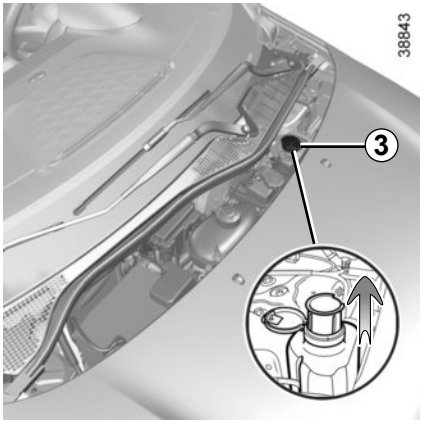

Windscreen washer reservoir

Topping up

Engine switched off:

– open the cap ***3***;

– pull the extending funnel upwards as far as it will go;

– fill until you can see the fluid;

– push the funnel by pressing on it and replace the cap.

Liquid

Screen wash product (product with antifreeze in winter).

Filters

The filter elements (air filter, passenger compartment filter, etc.) should be replaced during the maintenance operations carried out on your vehicle.

Replacement intervals for filter elements: refer to the Maintenance Document for your vehicle.

If there is an abnormal or repeated drop in the fluid level, please consult an authorised dealer.

For your safety, do not remove the bonnet holding straps.

Risk of the bonnet falling on the road surface.

When working in the engine compartment, ensure that the windscreen wiper stalk is in the park position.

Risk of injury.

Before performing any action in the engine compartment, the ignition must be switched off (please see the information on “Starting, stopping the engine” in Section 2).

No operations should be carried out on the cooling circuit when the engine is hot.

Risk of burns.

Please note when working close to the engine that it may be hot. The engine cooling fan may also start at any moment. The warning light in the engine compartment reminds you of this.

Risk of injury.

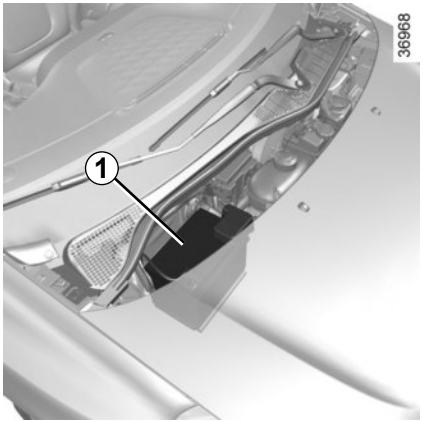

This is located under the bonnet and does not need to be serviced. **You should not open it or add any fluid.**

Handle the battery with care as it contains sulphuric acid which must not come into contact with the eyes or skin. If it does, wash the affected area with plenty of cold water. If necessary, consult a doctor. Ensure that naked flames, red hot objects and sparks do not come into contact with the battery as there is a risk of explosion.

Replacing the battery *1*

As this operation is complex, we advise you to contact an approved Dealer.

For your safety, do not remove the bonnet holding straps.

Risk of the bonnet falling on the road surface.

Please note when working close to the engine that it may be hot. The engine cooling fan may also start at any moment. The warning light in the engine compartment reminds you of this.

Risk of injury.

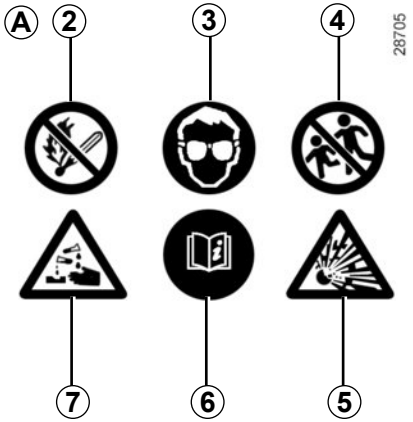

Label *A*

Observe the indications on the battery:

- ***2*** naked flames and smoking are forbidden;
- ***3*** eye protection required;
- ***4*** keep away from children;
- ***5*** explosive materials;
- ***6*** refer to the handbook;
- ***7*** corrosive materials.

The battery is a **specific type**, please ensure it is replaced with the same type. Consult an approved dealer.

37010

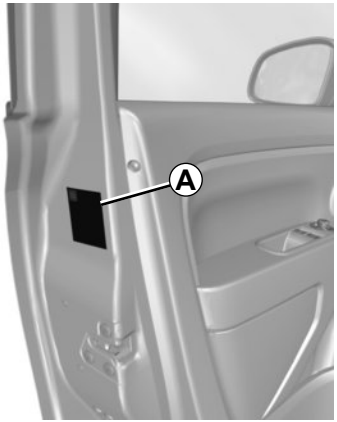

Label *A*

Open the driver's door to read it.

Tyre pressures should be checked when the tyres are cold.

If the tyre pressures cannot be checked when the tyres are **cold**, increase the pressures from **0.2** to **0.3** bar (or **3 PSI**). **Never deflate a hot tyre.**

36967

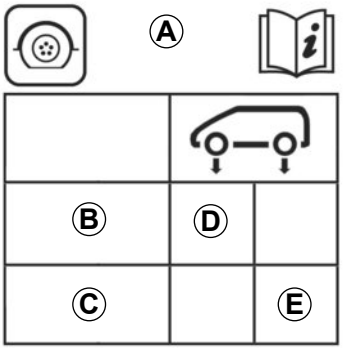

B: size of vehicle front tyres.

C: size of vehicle rear tyres.

D: recommended front pressure.

E: recommended rear pressure.

Vehicle fitted with a tyre pressure loss warning system

If under-inflated (puncture, low pressure etc.), the warning light on the instrument panel comes on. See "Tyre pressure loss warning" in Section 2.

Vehicle used fully laden (Maximum Permissible All-up Weight) and towing a trailer

The maximum speed must be limited to **60 mph (100 km/h)** and the tyre pressure increased by **0.2 bar**.

Please refer to the information on "Weights" in Section 6.

Risk of tyre blowouts.

TYRE PRESSURE (2/2)

Tyre safety and use of snow chains: Refer to the information on “Tyres” in Section 5 for the servicing conditions and, depending on the version, the use of chains.

For your safety, please respect the speed limit.

When they need to be replaced, only tyres of the same make, size, type and profile should be used on a single axle.

They must: either have a load capacity and speed rating at least equal to those of the original tyres, or conform to those recommended by an authorised dealer.

Failure to heed these instructions could endanger your safety and affect your vehicle’s roadworthiness.

Risk of loss of control of the vehicle.

BODYWORK MAINTENANCE (1/3)

A well-maintained vehicle will last longer. It is therefore recommended to maintain the exterior of the vehicle regularly.

Your vehicle has been treated with very effective anti-corrosion products. It is nevertheless subject to various outside influences.

Corrosive agents in the atmosphere
- atmospheric pollution (built-up and industrial areas);
- saline atmospheres (near the sea, particularly in hot weather);
- seasonal and damp weather conditions (e.g. road salt in winter, water from road cleaners, etc.).

Minor impacts

Abrasive action
Dust and sand in the air, mud, road grit thrown up by other vehicles, etc.

You should take a number of minor precautions in order to safeguard your vehicle against such risks.

You should

Wash your car frequently, **with the engine off**, with cleaning products recommended by the manufacturer (never use abrasive products). Rinse thoroughly beforehand with a jet:
- spots of tree resin and industrial grime;
- mud in the wheel arches and underneath the body which forms damp patches;
- **bird droppings**, which cause a chemical reaction with the paint that **rapidly discolours paintwork and may even cause the paint to peel off;**
  wash the vehicle **immediately** to remove these marks since it is impossible to remove them by polishing;
- salt, particularly in the wheel arches and underneath the body after driving in areas where the roads have been gritted.

Remove any plant matter (resin, leaves, etc.) from the vehicle regularly.

Respect local regulations about washing vehicles (e.g. do not wash your vehicle on a public highway).

Observe the vehicle stopping distances when driving on gravelled surfaces to prevent paint damage.

Repair, or have repaired quickly, areas where the paint has been damaged, to prevent corrosion spreading.

Remember to visit the body shop periodically in order to maintain your anti-corrosion warranty. Refer to the Maintenance Document.

If it is necessary to clean mechanical components, hinges, etc., spray them with products approved by our Technical Department to protect them after they have been cleaned.

We have selected special products to care for your vehicle and you can obtain these from the manufacturer's accessory outlets.

What you should not do

Wash the vehicle in bright sunlight or freezing temperatures.

Do not scrape off mud or dirt without pre-wetting.

Allow dirt to accumulate on the exterior.

Allow rust to form following minor impacts.

Do not use solvents not approved by our Technical Department to remove stains as this could damage the paintwork.

Do not drive in snow or muddy conditions without washing the vehicle, particularly under the wheel arches and body.

Degrease or clean using high-pressure cleaning equipment or by spraying on products not approved by our Technical Department:

– mechanical components (e.g.: engine compartment);
– underbody;
– parts with hinges (e.g.: inside the doors);
– painted plastic external fittings (e.g.: bumpers).

Doing this could give rise to corrosion or operational faults.

Vehicles with a matte paint finish

This type of paint requires certain precautions.

You should do the following

Wash the vehicle by hand using plenty of water, using a soft cloth or a gentle sponge.

Do not do the following

Use wax-based products (polishing).
Rub too hard.
Wash the vehicle in a roller-type car wash.
Attach stickers to the paintwork (risk of leaving marks).

Wash the vehicle using a high-pressure cleaning device.

Using a roller type car wash

Return the windscreen wiper stalk to the Park position (refer to the information on the “Windscreen washer, wiper” in Section 1). Check the mounting of external accessories, additional lights and mirrors, and ensure that the wiper blades are secured with adhesive tape.

Remove the radio aerial mast if your vehicle is fitted with this equipment.

Remember to remove the tape and refit the antenna after washing.

Cleaning the headlights

As the headlights are made of plastic “glass”, use a soft cloth or cotton wool to clean them. If this does not clean them properly, moisten the cloth with soapy water, then wipe clean with a soft damp cloth or cotton wool.
Finally, carefully dry off with a soft dry cloth.

Do not use cleaning products containing alcohol or utensils (e.g.: a scraper).

INTERIOR TRIM MAINTENANCE (1/2)

A well-maintained vehicle will last longer. It is therefore recommended to maintain the interior of the vehicle regularly.

A stain should always be dealt with swiftly.

Whatever type of stain is on the trim, use **cold** (or warm) **soapy water with natural soap**.

Detergents (washing-up liquid, powdered products, alcohol-based products) should not be used.

Use a soft cloth.

Rinse and soak up the excess.

Glass instrument panel

(e.g. instrument panel, clock, exterior temperature display, radio display, etc.)

Use a soft cloth (or cotton wool).
If this does not clean them properly, use a soft cloth (or cotton wool) slightly moistened with soapy water and then wipe clean with another soft damp cloth or cotton wool.
Finally, **carefully** dry off with a soft dry cloth.

Do not use products containing alcohol and/or spray fluids on the area.

Seat belts

These must be kept clean.
Use products selected by our Technical Department (Approved outlets) or warm, soapy water and a sponge and wipe with a dry cloth.
Detergents or dyes must not be used under any circumstances.

Textiles (seats, door trim, etc)

Vacuum-clean the textiles **regularly**.

Liquid stain

Use soapy water.

Dab lightly (never rub) with a soft cloth, rinse and remove the excess.

Solid or pasty stain

Carefully remove the excess solid or pasty material **immediately** with a spatula (working from the edges to the centre to avoid spreading the stain).
Clean as for a liquid stain.

Special instructions for sweets or chewing gum

Put an ice cube on the stain to solidify it, then proceed as for a solid stain.

For further recommendations for maintaining the interior, and/or for any unsatisfactory results, please see an authorised dealer.

Removal/replacing removable equipment originally fitted in the vehicle

If you need to remove equipment in order to clean the passenger compartment (for example, mats), always ensure that they are correctly refitted and are the right way around (the driver's mat should be fitted on the driver's side, etc.) and fit them with the components supplied with the equipment (for example, the driver mat should always be fixed using the pre-fitted mounting components).

With the vehicle stationary, always ensure that nothing will impede driving (anything obstructing the pedals, heel wedged by the mat etc.).

You should not:

Position objects such as deodorants, scents etc. near air vents as this could damage your dashboard trim.

Use high-pressure cleaning equipment or sprays inside the passenger compartment:

without careful use, this equipment could impair the correct functioning of the electrical or electronic components in the vehicle, or have other detrimental effects.

Section 5: Practical advice

Puncture 5.2
Tyre inflation kit 5.3
Tyres (tyre and wheel safety, use in winter) 5.7
Headlights (changing bulbs) 5.10
Rear lights and side lights (replacing bulbs) 5.12
Interior lighting (changing bulbs) 5.15
Fitting a radio. 5.16
Fuses. 5.17
Radio frequency remote control: batteries. 5.20
Battery 5.22
Accessories 5.25
Wipers (replacing blades) 5.26
Towing 5.28
Tow eye 5.29
Operating faults 5.30

In case of puncture

Depending on the vehicle, a tyre inflation kit (see the following pages) or self-repairing tyres may be available.

Vehicles fitted with self-repairing tyres

These can be identified by a specific marking on the tyre sidewall ***A*** (for further information, please contact an Approved Dealer).

Vehicles fitted with self-repairing tyres can still be driven in the event of a puncture as the tyre is able to seal the punctured area.

However, in some cases (e.g. 6 mm diameter hole, puncture on the tyre sidewall) the tyre cannot repair itself, be repaired or reinflated. In this case it should be inspected by a specialist as soon as possible.

If the vehicle is parked on the hard shoulder, you must warn other road users of your vehicle's presence with a warning triangle or with other devices as per the legislation applying to the country you are in.

TYRE INFLATION KIT (1/4)

The kit repairs tyres when tread ***A*** has been damaged by objects smaller than 4 mm. It cannot repair all types of puncture, such as cuts larger than 4 mm, or cuts in tyre sidewall ***B***.

Ensure also that the wheel rim is in good condition.

Do not pull out the foreign body causing the puncture if it is still in the tyre.

Do not attempt to use the inflation kit if the tyre has been damaged as a result of driving with a puncture.

You should therefore carefully check the condition of the tyre sidewalls before any operation.

Driving with underinflated, flat or punctured tyres can be dangerous and may make the tyre impossible to repair.

This repair is temporary

A tyre which has been punctured should always be inspected (and repaired, where possible) as soon as possible by a specialist.

When taking a tyre which has been repaired using this kit to be replaced, you must inform the specialist.

When driving, vibration may be felt due to the presence of the repair product injected into the tyre.

The kit is only approved for inflating the tyres of the vehicle originally equipped with the kit.

It must never be used to inflate the tyres of another vehicle, or any other inflatable object (rubber ring, rubber boat, etc.).

Avoid spillage on skin when handling the repair product bottle. If droplets do leak out, rinse them off with plenty of water.

Keep the repair kit away from children.

Do not dispose of the empty bottle in the countryside. Return it to your approved dealer or to a recycling organisation.

The bottle has a limited service life which is indicated on its label. Check the expiry date.

Contact an approved dealer to replace the inflation tube and repair product bottle.

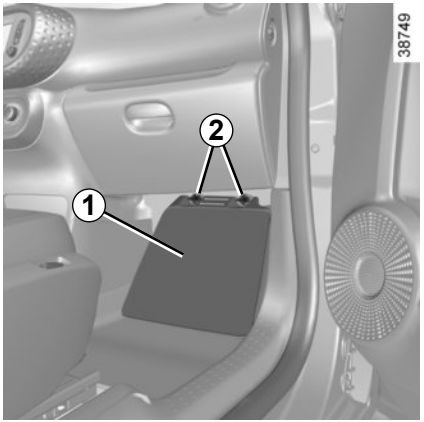

In the event of a puncture, use the kit situated under the passenger footwell ***1*** by unscrewing the two screws ***2***.

Before using this kit, park the vehicle at a sufficient distance from traffic, switch on the hazard warning lights, apply the handbrake, ask all passengers to leave the vehicle and keep them away from traffic.

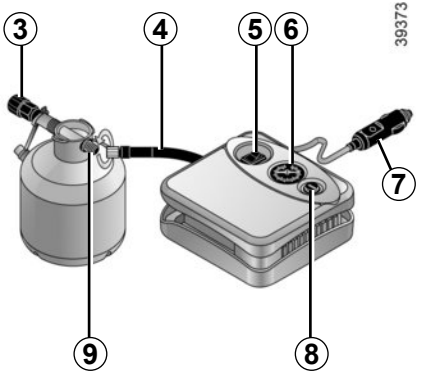

With the engine running and the parking brake applied,

– Connect the compressor hose ***4*** to the container inlet ***9***;
– remove the cap from the container inflation adapter **3**;
– unscrew the valve cap on the relevant wheel and screw on the container's inflation adapter ***3***;
– disconnect any accessories previously connected to the vehicle's accessories sockets;
– the end piece ***7*** **must** be plugged in to the vehicle accessories socket;
– press switch ***5*** to inflate the tyre to the recommended pressure (please refer to the information on "Tyre inflation pressure" in Section 4);
– after a maximum of **15** minutes, stop inflating and read the pressure (on pressure gauge ***6***).

Note: While the container empties (approx. 30 secs), the pressure gauge ***6*** briefly shows pressure up to 6 bar, then the pressure drops.

– Adjust the pressure: to increase it, continue inflation with the kit; to reduce it, press button ***8***.

If the vehicle is parked on the hard shoulder, you must warn other road users of your vehicle's presence with a warning triangle or with other devices as per the legislation applying to the country you are in.

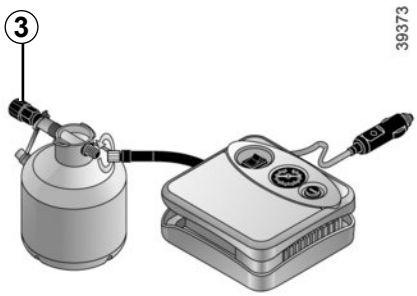

If a minimum pressure of 1.8 bar is not reached after 15 minutes, repair is not possible; do not drive the vehicle but contact an approved dealer.

Nothing should be placed around the driver's feet as such objects may slide under the pedals during sudden braking manoeuvres and obstruct their use.

Once the tyre is correctly inflated, remove the kit: slowly unscrew the container inflation adapter ***3*** to avoid any product release and store the container in plastic packaging to prevent release of the product.

– Affix the driving recommendation label (located under the container) to the dashboard where the driver can see it.

– Put the kit away.

– At the end of this initial inflation operation, air will still escape from the tyre. You must drive a short distance in order to seal the hole.

– Start immediately and drive at between 12 and 40 mph (20 and 60 km/h) in order to distribute the product evenly in the tyre and, after driving for 2 miles (3 km), stop and check the pressure.

– If the pressure is greater than 1.3 bar but less than the recommended pressure (refer to the label affixed to the edge of the driver's door), readjust it. Otherwise, please contact an authorised dealer: the tyre cannot be repaired.

Precautions when using the kit

The kit should not be operated for more than 15 consecutive minutes.

The container must be replaced after the first use even if liquid remains inside.

Please be aware that a poorly tightened or missing valve cap can make the tyres less airtight and lead to pressure loss.

Always use valve caps identical to those fitted originally and tighten them fully.

Following repair with the kit, do not travel further than 120 miles (200 km). In addition, reduce your speed and under no circumstances exceed 48 mph (80 km/h). The sticker, which you must affix in a prominent position on the dashboard, reminds you of this.
Depending on the country or local legislation, a tyre repaired with the inflation kit may need to be replaced.

Tyre and wheel safety

The tyres are the only contact between the vehicle and the road, so it is essential to keep them in good condition. You must make sure that your tyres conform to local road traffic regulations.

Maintaining the tyres

The tyres must be in good condition and the tread form must have sufficient depth; tyres approved by our Technical Department have wear warning strips ***1*** which are **indicators moulded into the tread at several points.**

When the tyre tread has been worn to the level of the warning strips, **they become visible *2***: it is **then** necessary to replace your tyres because the tread rubber is now only **1.6 mm deep at most, resulting in poor road holding on wet roads.**

An overloaded vehicle, long journeys by motorway, particularly in very hot weather, or continual driving on poorly surfaced minor roads will lead to more rapid tyre wear and affect safety.

Incidents which occur when driving, such as striking the kerb, may damage the tyres and wheel rims, and could also lead to misalignment of the front or rear axle geometry. In this case, have the condition of these checked by an approved dealer.

Tyre pressures

Adhere to the tyre pressures. The tyre pressures should be checked at least once a month and additionally before any long journey (refer to the label affixed to the edge of the driver's door).

The pressures should be checked cold: ignore higher pressures which may be reached in hot weather or following a high speed journey.

Incorrect tyre pressures lead to abnormal tyre wear and unusually hot running. These are factors which may seriously affect safety and lead to:
- poor road holding,
- risk of bursting or tread separation.

The pressure depends on the load and the speed of use. Adjust the pressure according to the conditions of use (refer to the label affixed to the edge of the driver's door).

If the pressures cannot be checked when the tyres are **cold**, increase the pressures from **0.2** to **0.3** bar (or **3 PSI**).

Never deflate a hot tyre.

Changing wheels around

Please be aware that a poorly tightened or missing valve cap can make the tyres less airtight and lead to pressure loss.

Always use valve caps identical to those fitted originally and tighten them fully.

The front and rear wheels have different dimensions. For safety reasons, it is not permitted to switch the front wheels (tyres and/or rims) with the rear wheels.

Vehicle fitted with a tyre pressure loss warning system

If under-inflated (puncture, low pressure etc.), the warning light on the instrument panel comes on. See "Tyre pressure loss warning" in Section 2.

Fitting new tyres

For safety reasons, this operation must be carried out by a specialist. Fitting different tyres may change your vehicle as follows:
- it may mean that your vehicle no longer conforms to current regulations;
- it may change the way it handles when cornering;
- it may cause the steering to be heavy;
- it may affect the use of snow chains.

Use in winter

Chains
For safety reasons, only fit chains on the rear axle.
Chains cannot be fitted to tyres which are larger than those originally fitted to the vehicle.

Snow or winter tyres
We would recommend that these be fitted to all **four wheels** to ensure that your vehicle retains maximum adhesion.
Warning: These tyres sometimes have a specific direction of rotation and a maximum speed index which may be lower than the maximum speed of your vehicle.

Studded tyres
This type of equipment may only be used for a limited period and as laid down by local legislation. It is necessary to observe the speed specified by current legislation.
These tyres must, at a minimum, be fitted to the two front wheels.

For your safety, please respect the speed limit.
When they need to be replaced, only tyres of the same make, size, type and profile should be used on a single axle.
They must: either have a load capacity and a speed capacity at least equal to the original tyres, or correspond to those recommended by your authorised dealer.
Failure to heed these instructions could endanger your safety and affect your vehicle's roadworthiness.
Risk of loss of control of the vehicle.

Chains may only be fitted to tyres of the same size as those originally fitted to **your vehicle**.

In all cases, we would recommend that you contact an approved dealer who will be able to advise you on the choice of equipment which is most suitable for your vehicle.

16" wheels cannot be fitted with chains.
If you wish to fit snow chains, you must use **special equipment**.
Consult an approved Dealer.

17" wheels cannot be fitted with chains.
To obtain equivalent special equipment, consult an approved dealer.

FRONT HEADLIGHTS: changing bulbs (1/2)

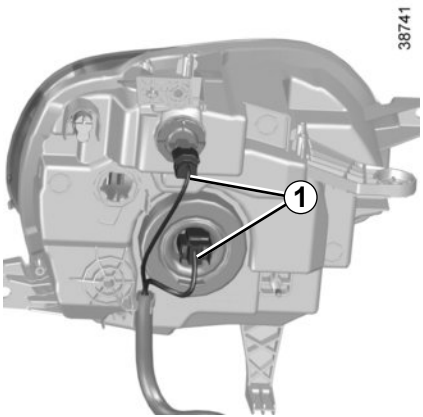

Dipped/Main beam headlight

To change the bulb:

– disconnect wiring ***1***;
– remove cover ***A***;
– unclip the spring ***3*** and remove the bulb.

Bulb type: H4.

It is **essential** to use anti-U.V. 55W bulbs so as not to damage the plastic on the headlights.

Do not touch the bulb glass. Hold it by its base.

When the bulb has been changed, make sure you refit the cover correctly.

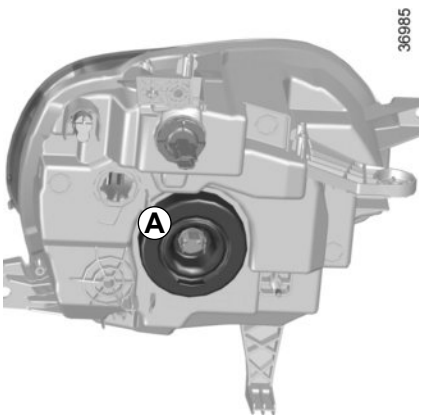

Direction indicator lights

Turn the bulb holder ***2*** a quarter of a turn and take out the bulb.

Bulb type: PY21W.

Once the bulb has been replaced, check that it is properly secured.

For your safety, do not remove the bonnet holding straps.

Risk of the bonnet falling on the road surface.

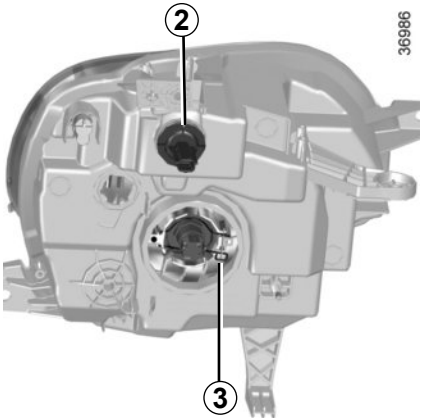

The bulbs are under pressure and can break when replaced.

Risk of injury.

Please note when working close to the engine that it may be hot. The engine cooling fan may also start at any moment. The warning light in the engine compartment reminds you of this.

Risk of injury.

Daytime running lights *4*

Please see an authorised dealer.

Front fog lights *5*

– Access the bulb holder via the underneath of the vehicle;
– unclip the flap;
– unscrew the bulb holder.

Bulb type: H16.

Additional lights

If you wish to fit fog lights to your vehicle, please see an authorised dealer.

Any operation on (or modification to) the electrical system must be performed by an approved dealer since an incorrect connection might damage the electrical equipment (harness, components and in particular the alternator). In addition, your Dealer has all the parts required for fitting these units.

To comply with local legislation, or as a precaution, you can obtain an emergency kit containing a set of spare bulbs and fuses from an approved dealer.

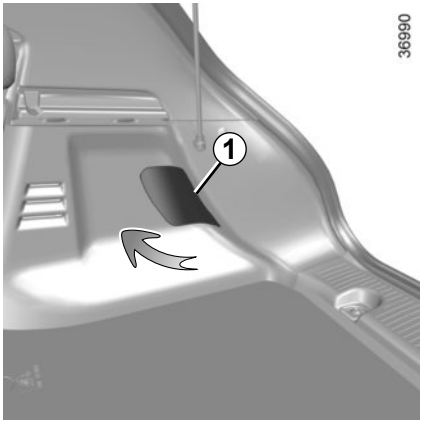

Side lights/brake and direction indicator lights

– From the boot, open the cover ***1***;

– unscrew ***2***;

– from outside, pull the light unit towards you, pulling from the side ***A***;

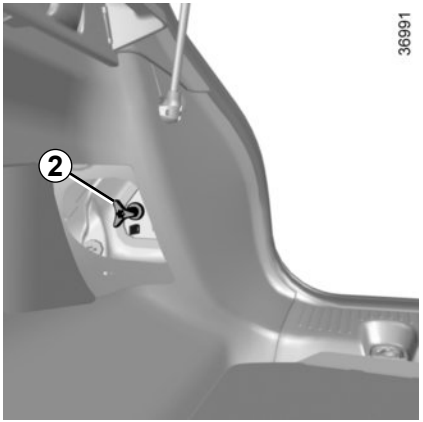

– remove the bulb holder by releasing the four clips ***3***;

– change the bulb;

– refit the bulb holder and push the light unit as far as it will go, until it locks into place;

– check that the light is properly locked in position;

– tighten the screw ***2*** and close the cover ***1***.

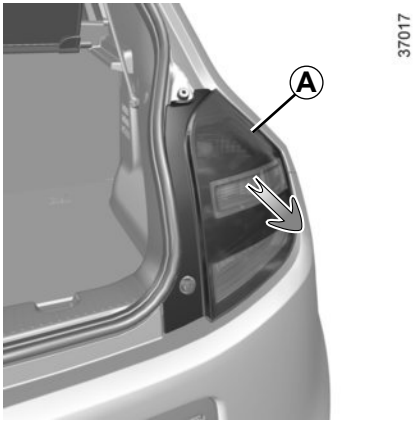

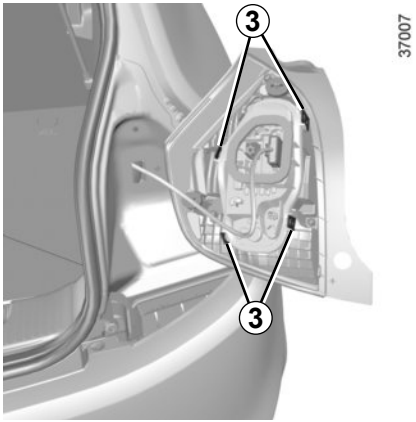

The bulbs are under pressure and can break when replaced.

Risk of injury.

4 **Side light and brake light**
Bulb type: P21/5W.

5 **Direction indicator lights**
Bulb type: PY21W.

6 **Reversing light**
Bulb type: P21W.

7 **Fog light**
Bulb type: P21W.

Note: Depending on the vehicle, the reversing and fog lights are inverted.

High-level brake light *8*

Consult an approved dealer.

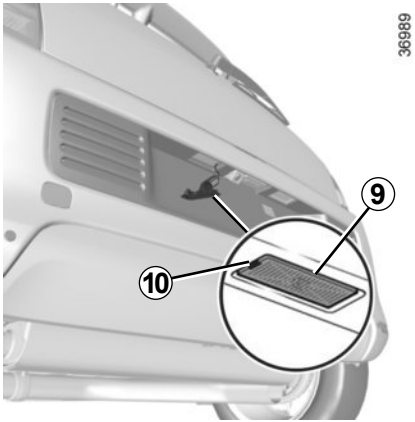

Number plate lights

– Unclip light ***9*** by pressing tab ***10***;

– remove the light cover to gain access to the bulb.

Bulb type: W5W.

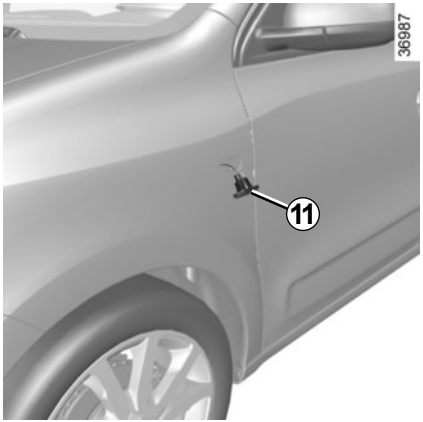

Side indicator lights

Unclip the indicator light ***11*** using a flat-blade screwdriver or similar.

Turn the bulb holder a quarter of a turn and take out the bulb.

Bulb type: W5W.

Replace the bulb and refit the indicator light.

The bulbs are under pressure and can break when replaced.

Risk of injury.

Courtesy light

Unclip the lens (using a flat-blade screwdriver or similar).

Remove the bulb concerned.

Bulb type *1*: W5W.

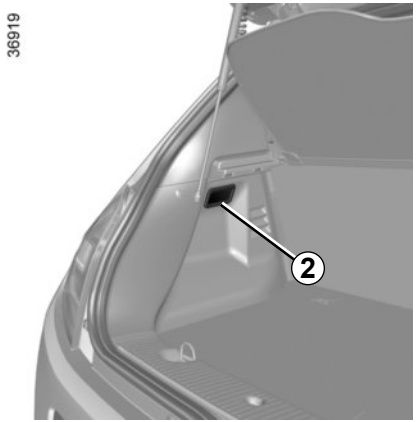

Luggage compartment light

Unclip light ***2*** by pressing the tabs on each side (using a flat-blade screwdriver or similar).

Disconnect the light.

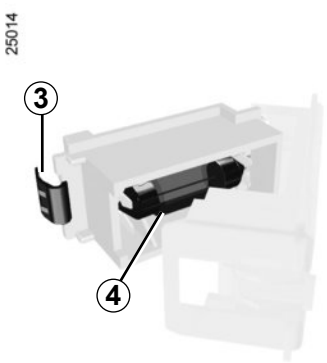

Press tab ***3*** to release the bulb holder and access bulb ***4***.

Bulb type: C5W festoon type bulb.

The bulbs are under pressure and can break when replaced.

Risk of injury.

FITTING A RADIO

Radio location *1*

Unclip the blanking cover. The aerial, + and – supply and speaker wire connections are located behind it.

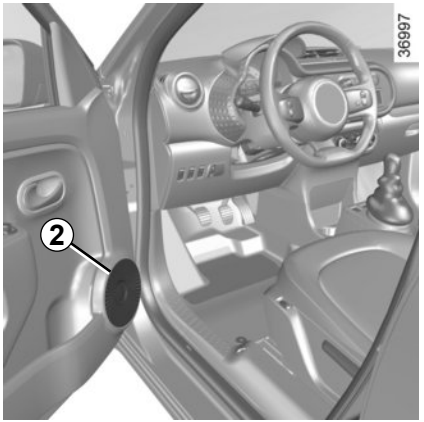

Door speakers *2*

To install any equipment, please consult an authorised dealer.

– In all cases, it is very important to follow the manufacturer's instructions carefully.

– The specifications of the brackets and wires (available from our network) vary depending on the equipment level of your vehicle and the type of radio.

  Consult an approved Dealer to find out the correct part number.

– No work may be carried out on the vehicle's electrical or radio circuits, except by approved dealers: an incorrectly connected system may result in damage being caused to the electrical equipment and/or the components connected to it.

Fuses in passenger compartment A

If any electrical component does not work, check the condition of the fuses.

Unclip the access flap ***A***.

It may be necessary to use clips to remove and replace the fuses. These can be purchased at an authorised dealer.

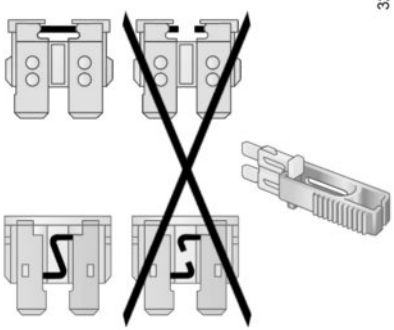

To comply with current legislation, or as a precaution, you can obtain an emergency kit from your approved dealer containing a set of spare bulbs and fuses.

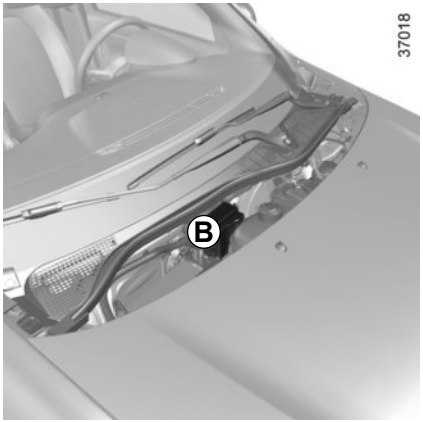

Fuses in engine compartment *B*

Some functions are protected by fuses located in the engine compartment (unit ***B***).

However, because of their reduced accessibility, **we advise you to have your fuses replaced by an approved Dealer**.

Check the fuse in question and **replace it,** if necessary, **by a fuse of the same rating.**

If a fuse is fitted with too high a rating, it may cause the electrical circuit to overheat (risk of fire) in the event of an item of equipment using an excessive amount of current.

FUSES (2/3)

Allocation of fuses
(the presence of certain fuse depends on the vehicle equipment level)

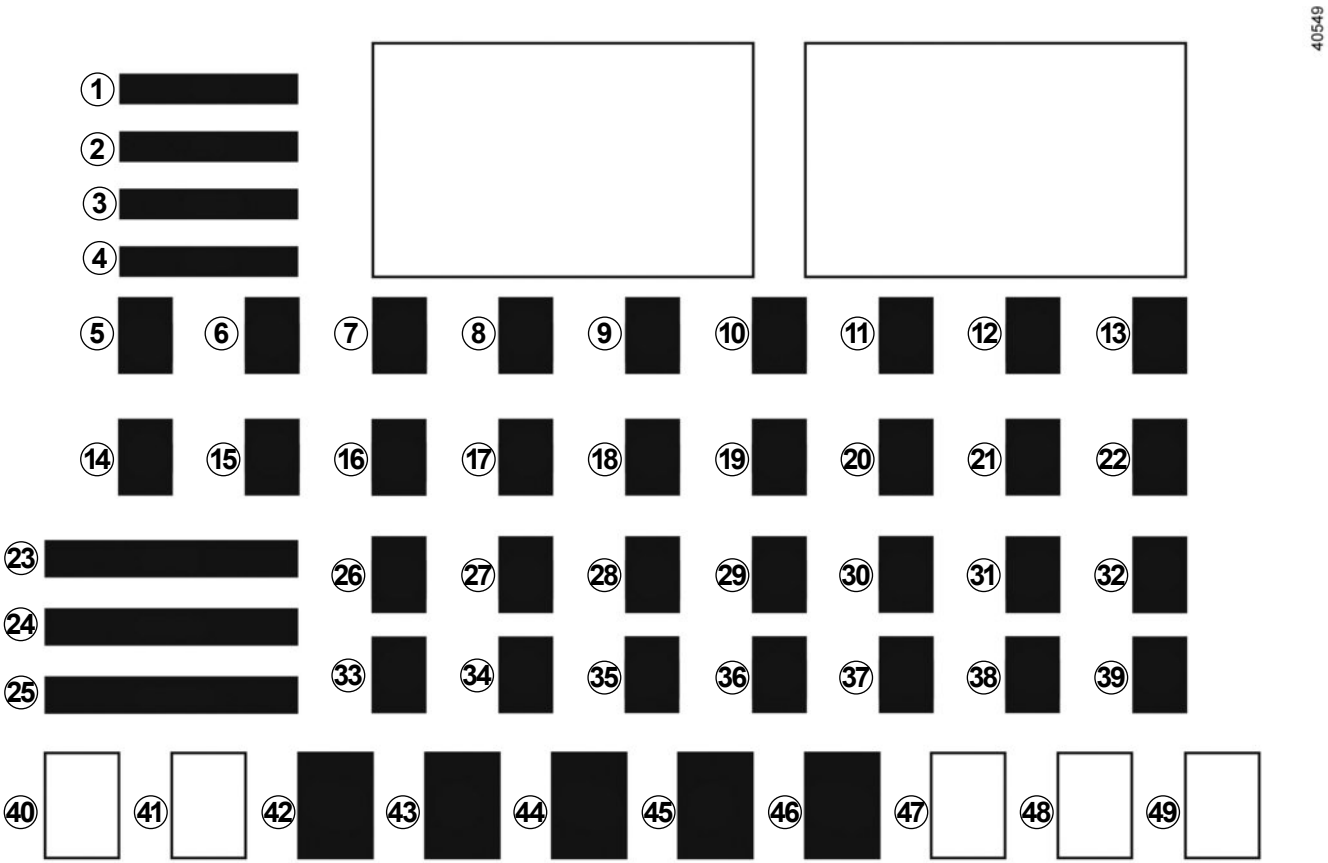

FUSES (3/3)

Number	Allocation
1	“Starting” position on the ignition-starter switch
2	Power-assisted steering
3	Lighting
4	Airbags
5	Lighting
6	Instrument panel
7	Alarm
8	UCE energy management
9	UCE energy management
10	Passenger compartment ECU
11	Direction indicator lights
12	Passenger compartment ECU
13	Passenger compartment ECU
14	Electric windows
15	ESC/steering wheel angle sensor/automatic gearbox
16	Courtesy lights/air conditioning
17	Locking/unlocking the doors/ESC
18	Rear-view mirrors
19	Brake lights

Number	Allocation
20	Headlight beam height/rear parking distance control/ front camera adjustment
21	Injection
22	Reversing light/rear windscreen wiper
23	“Starting” position on the ignition-starter switch
24	«Accessory» position on the ignition switch/service relay
25	Front windscreen wiper
26	Radio/energy management
27	Daytime running lights
28	Accessories socket
29	UCE energy management
30	Horn
31	Rear fog light
32	“Accessory” position on the ignition-starter switch
33	Exterior lights/Rear side lights

Number	Allocation
34	energy management ECU/ passenger compartment ECU/headlights/daytime running lights
35	Right headlight/energy management ECU
36	Left headlight/passenger compartment ECU
37	Right-hand main beam headlight
38	Left headlight/passenger compartment ECU
39	Bicycle carrier
40	Not used
41	Not used
42	Fog lights
43	Radio amplifier
44	Automatic gearbox
45	Electric windows/one-touch windows
46	Electric door mirrors
47	Not used
48	Not used
49	Not used

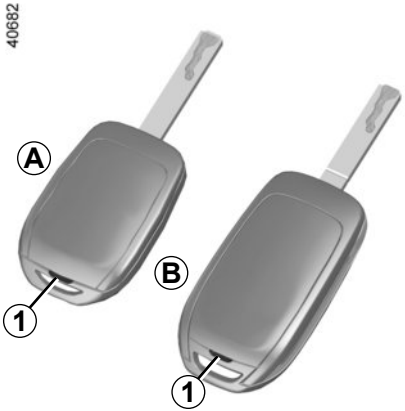

Replacing the battery

Open the case at slot ***1*** using a flat-blade screwdriver or similar, and replace the battery ***2***, observing the type and polarity shown on the back of the cover.

When refitting, ensure that the cover is correctly clipped on and the screw tightened.

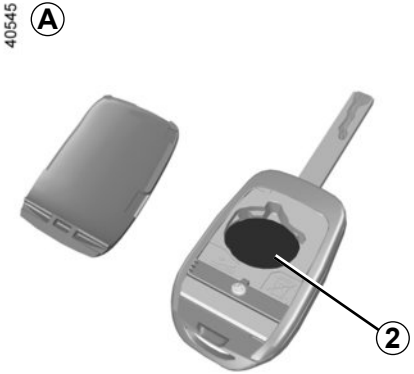

Note: It is not advisable to touch the electronic circuit in the key cover when replacing the battery.

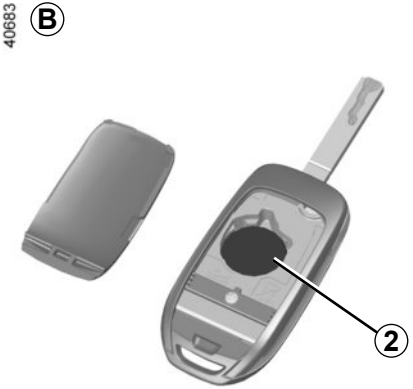

The batteries are available from approved Dealers, and their service life approximately two years.

Check that there is no dye on the battery: risk of an incorrect electrical contact.

Operating faults

If the battery is too weak to ensure correct operation, you can still start and lock/unlock the vehicle (please refer to the information on “Locking/unlocking the opening elements” in Section 1).

Do not throw away your used batteries; give them to an organisation responsible for collecting and recycling batteries.

To avoid all risk of sparks:

- Ensure that any electrical consumers (courtesy lights, etc.) are switched off before disconnecting or reconnecting the battery.
- When charging, stop the charger before connecting or disconnecting the battery.
- Do not place metal objects on the battery to avoid creating a short circuit between the terminals.
- Always wait at least one minute after the engine has been switched off before disconnecting a battery.
- Make sure that you reconnect the battery terminals after refitting.

Connecting a battery charger

The battery charger must be compatible with a battery with nominal voltage of 12 volts.

Do not disconnect the battery while the engine is running. **Follow the instructions given by the manufacturer of the battery charger you are using.**

Special procedures may be required to charge some batteries. Contact your approved dealer.

Avoid all risk of sparks which may cause an immediate explosion, and charge the battery in a well ventilated area. **Risk of serious injury.**

Handle the battery with care as it contains sulphuric acid, which must not come into contact with eyes or skin. If it does, wash the affected area with plenty of cold water.

Ensure that naked flames, red hot objects and sparks do not come into contact with the battery as there is a risk of explosion.

The engine may be hot when carrying out operations in close proximity. In addition, the engine cooling fan can come on at any moment.

Risk of injury.

Starting the vehicle using the battery from another vehicle

If you have to use the battery from another vehicle to start, obtain suitable jump leads (with a large cross section) from an approved dealer or, if you already have jump leads, ensure that they are in perfect condition.

The two batteries must have an identical nominal voltage of 12 volts. The battery supplying the current should have a capacity (amp-hours, Ah) which is at least the same as that of the discharged battery.

Ensure that there is no risk of contact between the two vehicles (risk of short circuiting when the positive terminals are connected) and that the discharged battery is properly connected. Switch off your vehicle ignition.

Start the engine of the vehicle supplying the current and run it at an intermediate engine speed.

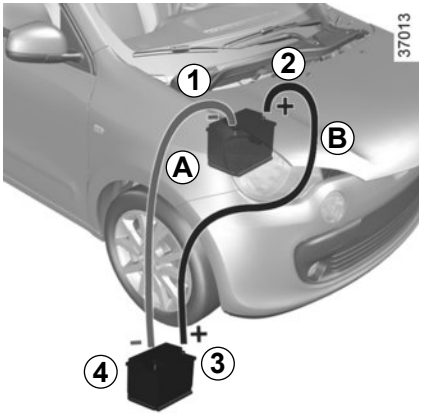

Depending on the vehicle, unclip the red protective cover to access **terminal *2*** (+).

Connect the positive cable ***B*** to the terminal ***2*** (+) then to the **terminal *3*** (+) of the battery supplying the current.

Connect the negative cable ***A*** to the **terminal *4*** (–) of the battery supplying the current, then to the **terminal *1*** (–) of the discharged battery.

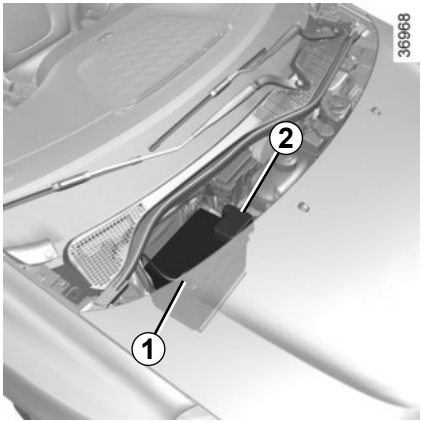

Check that there is no contact between cables ***A*** and ***B***, and that the positive cable ***B*** is not touching any metal parts of the vehicle supplying the current.

Risk of injury and/or damage to the vehicle.

For your safety, do not remove the bonnet holding straps. **Risk of the bonnet falling on the road surface.**

BATTERY: troubleshooting (3/3)

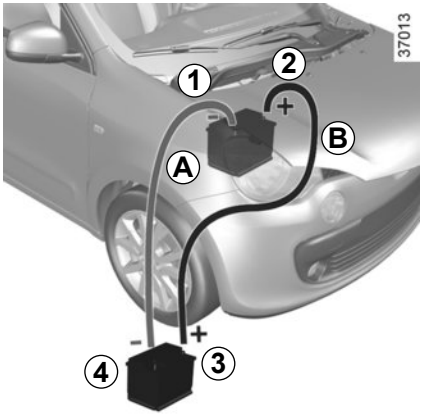

Start the engine. As soon as it is running, disconnect the cables ***A*** and ***B*** in reverse order **(*1 - 4 - 3 - 2*)** and position the red protective cover by pressing it down.

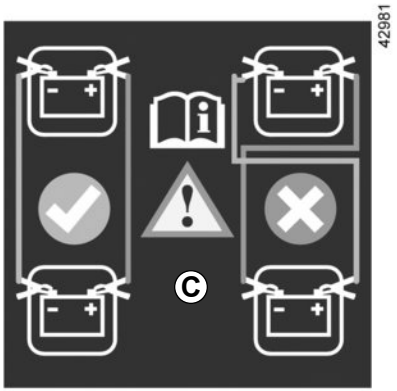

Follow the instructions on the label ***C***.

Electrical and electronic accessories
Before installing this type of accessory (particularly for transmitters/receivers: frequency bandwidth, power level, position of the aerial, etc.), make sure it is compatible with your vehicle. You can get advice from an authorised dealer.
Connect accessories with a maximum power of 120 Watts only. **Fire hazard.** When several accessory sockets are used at the same time, the total power of the connected accessories must not exceed 180 watts.
No work may be carried out on the vehicle's electrical or radio circuits, except by authorised dealers: an incorrectly connected system may result in damage being caused to the electrical equipment and/or the components connected to it.
If the vehicle is fitted with any aftermarket electrical equipment, make sure that the installation is correctly protected by a fuse. Establish the rating and position of this fuse.

Using the diagnostic socket
The use of electronic accessories on the diagnostic socket may cause serious disturbance to the vehicle's electronic systems. For your safety we recommend that you use only electronic accessories approved by the manufacturer, consult an Approved Dealer. **Serious accident risk**.

Use of transmitting/receiving devices (telephones, CB equipment etc.).
Telephones and CB equipment with integrated aerials may cause interference to the electronic systems originally fitted to the vehicle: it is advisable only to use equipment with an external aerial. **Furthermore, we remind you of the need to conform to the legislation in force concerning the use of such equipment.**

Fitting aftermarket accessories
If you wish to install accessories on the vehicle: please contact an authorised dealer. Also, to ensure the correct operation of your vehicle, and to avoid any risk to your safety, we recommend that you use only accessories specifically designed for your vehicle, which are the only accessories for which the manufacturer will provide a warranty.
If you are using an anti-theft device, only attach it to the brake pedal.
Obstructions to the driver
On the driver's side, only use mats suitable for the vehicle, attached with the pre-fitted components, and check the fitting regularly. Do not lay one mat on top of another. **There is a risk of wedging the pedals.**

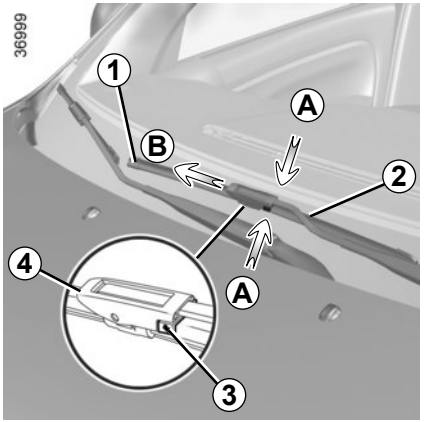

Replacing windscreen wiper blades *1*

Ignition switched off,

– Lift the wiper arm ***2***;

– turn blade ***1***.

– lower the tab ***3*** by pressing on each side ***A***.

– push the blade forwards ***B*** to release the hook ***4***.

To refit

Proceed in reverse order. Make sure that the blade is correctly locked in position.

– In frosty weather, make sure that the wiper blades are not stuck by ice (to avoid the risk of the motor overheating).

– Check the condition of the wiper blades.
They should be replaced as soon as they become less efficient: approximately once a year.

When changing the blade, when it has been removed, do not let the wiper arm fall against the window: risk of breaking the window.

Check the condition of the wiper blades. You are responsible for their service life:

– clean the blades, windscreen and rear screen regularly with soapy water;

– do not use them when the windscreen or rear screen are dry;

– free them from the windscreen or rear screen when they have not been used for a long time.

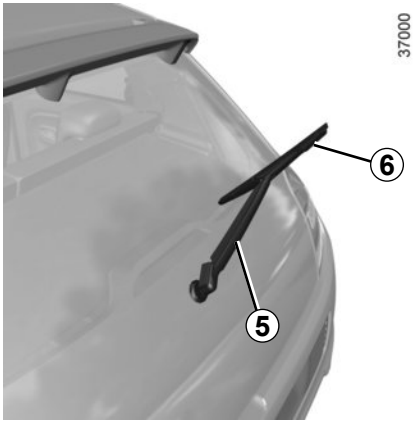

Rear screen wiper blade *5*

Ignition switched off,

– Lift the wiper arm ***5***;

– release the blade ***6*** by pulling it.

To refit

Proceed in reverse order. Make sure that the blade is correctly locked in position.

Before any towing, put the gears into neutral (neutral position for vehicles equipped with a manual gearbox or N position for vehicles equipped with an automatic gearbox).

Unlock the steering column; the ignition key must be in "M" position (ignition) to enable signalling ("Stop" lights, hazard warning lights, etc.). Always switch on the lights when driving at night.

Release the parking brake.

It is also essential to observe the towing regulations imposed by current legislation in your country. Please contact an authorised dealer.

When the engine is stopped, steering and braking assistance are not operational.

Do not remove the key from the ignition when the vehicle is being towed.

Towing a vehicle with an automatic gearbox

With the engine switched off, the transmission is no longer lubricated. It is preferable to tow this type of vehicle on a trailer or tow it with the rear wheels off the ground.

In exceptional circumstances, you may tow it with all four wheels on the ground, only in a forward gear, with the gear in neutral position **N**, over a maximum distance of 31 miles (50 km) and not exceeding a speed of 15.5 mph (25 km/h).

If the gear lever cannot be put into the N position, please consult an authorised dealer.

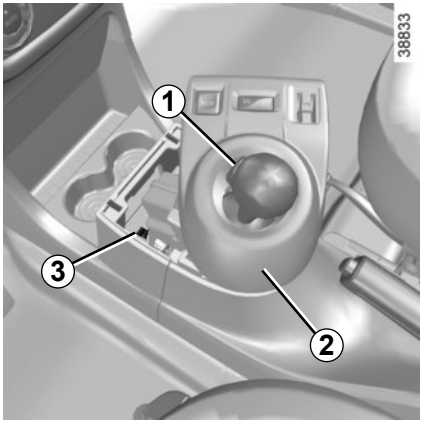

If the lever is locked in position **P**, even though you are depressing the brake pedal and pressing the unlocking button ***1***, the lever can still be released manually. To do this, unclip the base of the gear lever ***2*** starting on the side below the air conditioning controls. Then raise the button ***3*** and simultaneously press the unlock button ***1*** on the lever.

Contact an authorised dealer as soon as possible.

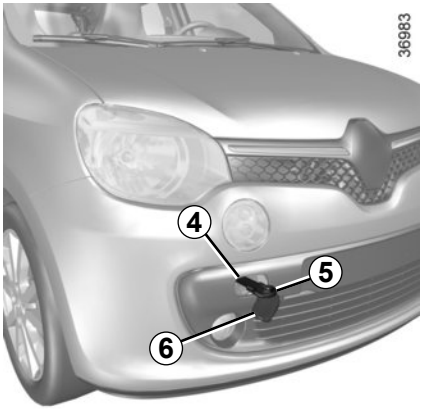

Only use the front and rear towing points *4*.
(never use the drive shafts or any other part of the vehicle)

This towing point may only be used for towing: never use it for lifting the vehicle directly or indirectly.

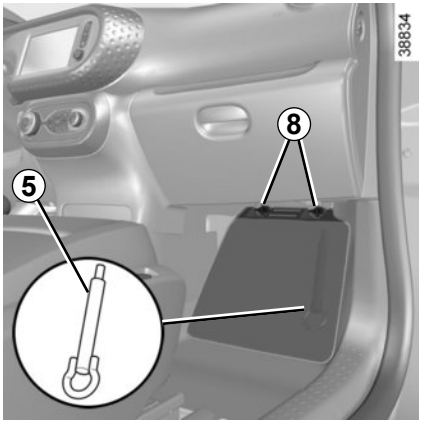

Access to towing points

Unclip the cover ***6*** by inserting a flat-blade screwdriver or similar under the cover. Screw in the tow eye ***5*** by hand as far as possible.

Only use the tow eye ***5*** located under the passenger footwell alongside the inflation kit; unscrew the two screws ***8***.

– Use a rigid towing bar. If a rope or cable is used (where the law allows this), the vehicle being towed must be able to brake.
– A vehicle must not be towed if it is not fit to be driven.
– Avoid accelerating or braking suddenly when towing, as this may result in damage being caused to the vehicle.
– In all cases, it is advisable not to exceed **15.5 mph (25 km/h)**.
– Do not push the vehicle if the steering column is locked.

Never leave tools unsecured in the vehicle: there is a risk that they may be thrown about during braking. After use, check that the tow eye is properly stored away in its housing: there is a risk of injury.

OPERATING FAULTS (1/6)

Using the remote control	POSSIBLE CAUSES	ACTION REQUIRED
The remote control does not lock or unlock the doors.	The remote control battery is flat.	Use the emergency key.
	Use of appliances operating on the same frequency as the remote control (mobile phone, etc.).	Stop using the devices or use the key.
	Vehicle located in a high electromagnetic radiation zone. Discharged battery.	Replace the battery or have it replaced. You can still lock/unlock and start your vehicle (refer to the information on “Locking/unlocking the doors” in Section 1 and “Starting/Stopping the engine” in Section 2).
	The vehicle is started.	With the engine running, the key’s locking/unlocking device is blocked. Turn off the ignition.

OPERATING FAULTS (2/6)

The following advice will enable you to carry out quick, temporary repairs. For safety reasons, you should always contact an approved Dealer as soon as possible.

The starter is activated	POSSIBLE CAUSES	WHAT TO DO
The instrument panel indicator lights are weak or fail to light up and the starter does not turn.	Battery terminals disconnected, oxidised or incorrectly secured.	Retighten, reconnect or clean them if they are oxidised.
	Battery discharged or worn.	Connect another battery to the faulty battery. Refer to the paragraph “Battery: troubleshooting” in Section 5 or replace the battery if necessary. Do not push the vehicle if the steering column is locked.
The engine will not start.	Starting conditions are not fulfilled.	Refer to the information on “Starting/stopping the engine” in Section 2.
The steering column remains locked.	Steering wheel locked.	To unlock, move the key and steering wheel (see “Starting, stopping the engine” in Section 2).

OPERATING FAULTS (3/6)

On the road	POSSIBLE CAUSES	WHAT TO DO
Vibrations.	Tyres not inflated to the correct pressure, incorrectly balanced or damaged.	Check the tyre pressures: if this is not the problem, have them checked by an approved Dealer.
Coolant boiling in the coolant reservoir.	Mechanical fault: damaged cylinder head gasket.	Stop the engine. Contact an approved Dealer.
Smoke under the bonnet.	Short circuit or cooling system leak.	Stop, switch off the ignition, stand away from the vehicle and contact an approved dealer.
The oil pressure warning light comes on:		
while cornering or braking	The level is too low.	Top up the engine oil level (refer to the information on “Engine oil level: topping up/filling” in Section 4).
is slow to go out or remains lit under acceleration	Loss of oil pressure.	Stop the vehicle and contact an approved Dealer.

OPERATING FAULTS (4/6)

On the road	POSSIBLE CAUSES	WHAT TO DO
Steering becomes heavy.	Assistance overheating. Fault with the electric assistance motor. Fault in the assistance system.	Drive carefully at reduced speed, be aware of the level of force in the steering wheel needed to turn the wheels. Consult an approved dealer
The engine overheats. The coolant temperature indicator and the warning light STOP come on.	Engine cooling fan not working.	Stop the vehicle, switch off the engine and contact an approved Dealer.
	Coolant leaks.	Check the coolant reservoir: it should contain fluid. If there is no coolant, consult an approved Dealer as soon as possible.

Radiator: If there is a lack of coolant, remember that it must never be topped up using cold coolant while the engine is very warm. After any procedure on the vehicle which has involved even partial draining of the cooling system, it must be refilled with a new mixture prepared in the correct proportions. Reminder: only products approved by our Technical Department may be used for this purpose.

OPERATING FAULTS (5/6)

Electrical equipment	POSSIBLE CAUSES	WHAT TO DO
The wipers do not work.	Wiper blades stuck.	Free the blades before using the wipers.
	Faulty electrical circuit.	Consult an approved dealer.
	Fuse damaged.	Replace the fuse or have it replaced; refer to the information in the “Fuses” section.
The wiper does not stop.	Faulty electrical controls.	Consult an approved dealer.
Direction indicators flashing more quickly.	Blown bulb.	See information on “Headlights: changing bulbs” or “Rear and side lights: changing bulbs”.
The direction indicators do not work.	Faulty electrical circuit or control.	Consult an approved dealer.
	Fuse damaged.	Replace the fuse or have it replaced; refer to the information in the “Fuses” section.
The lights do not come on or go off.	Faulty electrical circuit or control.	Consult an approved dealer.
	Fuse damaged.	Replace the fuse or have it replaced; refer to the information in the “Fuses” section.

OPERATING FAULTS (6/6)

Electrical equipment	POSSIBLE CAUSES	WHAT TO DO
Traces of condensation in the lights and headlights.	Traces of condensation may be a natural phenomenon caused by variations in temperature and humidity. In this case, the traces will disappear slowly once the lights are switched on.	
The front seat belt reminder light comes on when the seat belts are fastened.	An object is stuck between the floor and the seat and is disrupting the operation of the sensor.	Remove all objects from underneath the front seats.

Section 6: Technical specifications

Vehicle identification plates 6.2
Engine identification plate 6.3
Dimensions 6.4
Engine specifications 6.5
Towing weights 6.6
Weights 6.6
Replacement parts and repairs 6.7
Service sheets 6.8
Anticorrosion check 6.14

VEHICLE IDENTIFICATION PLATES

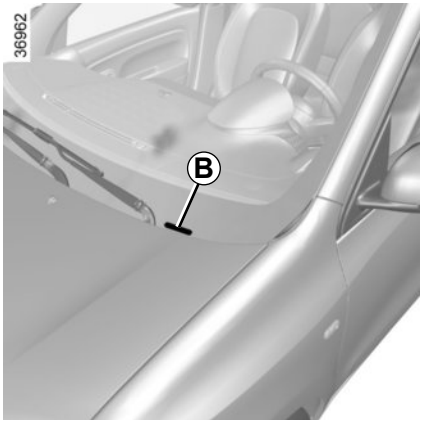

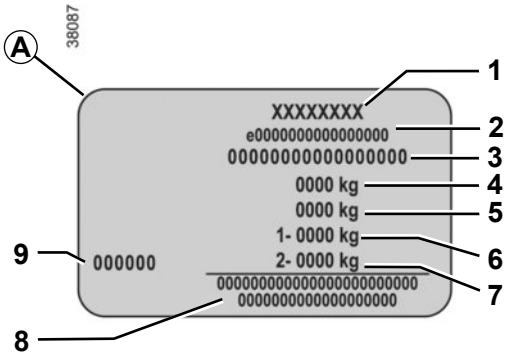

The information shown on the vehicle identification plate should be quoted on all correspondence or orders.

The presence and location of the information depends on the vehicle.

Vehicle identification plate *A*

1 Manufacturer name.
2 EC design number or approval number.
3 Identification number.
Depending on the vehicle, this information is also given on marking *B*.
4 MMAC (Maximum permissible all-up weight).
5 MTR (Gross Train Weight)
6 MMTA (Maximum Permissible Weight) front axle.
7 MMTA rear axle.
8 Reserved for related or additional entries.
9 Paint reference (colour code).

ENGINE IDENTIFICATION PLATES

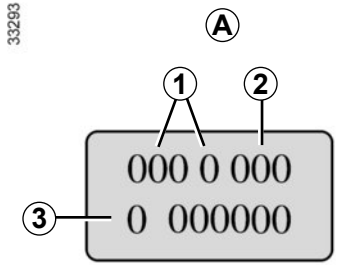

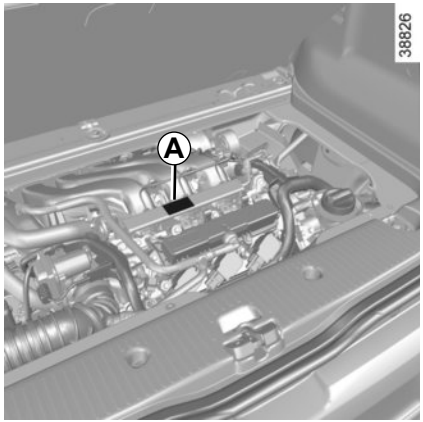

Please quote the information on the engine plate or label *A* in all correspondence or orders.
(Location varies depending on engine)

1 Engine type.

2 Engine suffix.

3 Engine number.

DIMENSIONS (in metres)

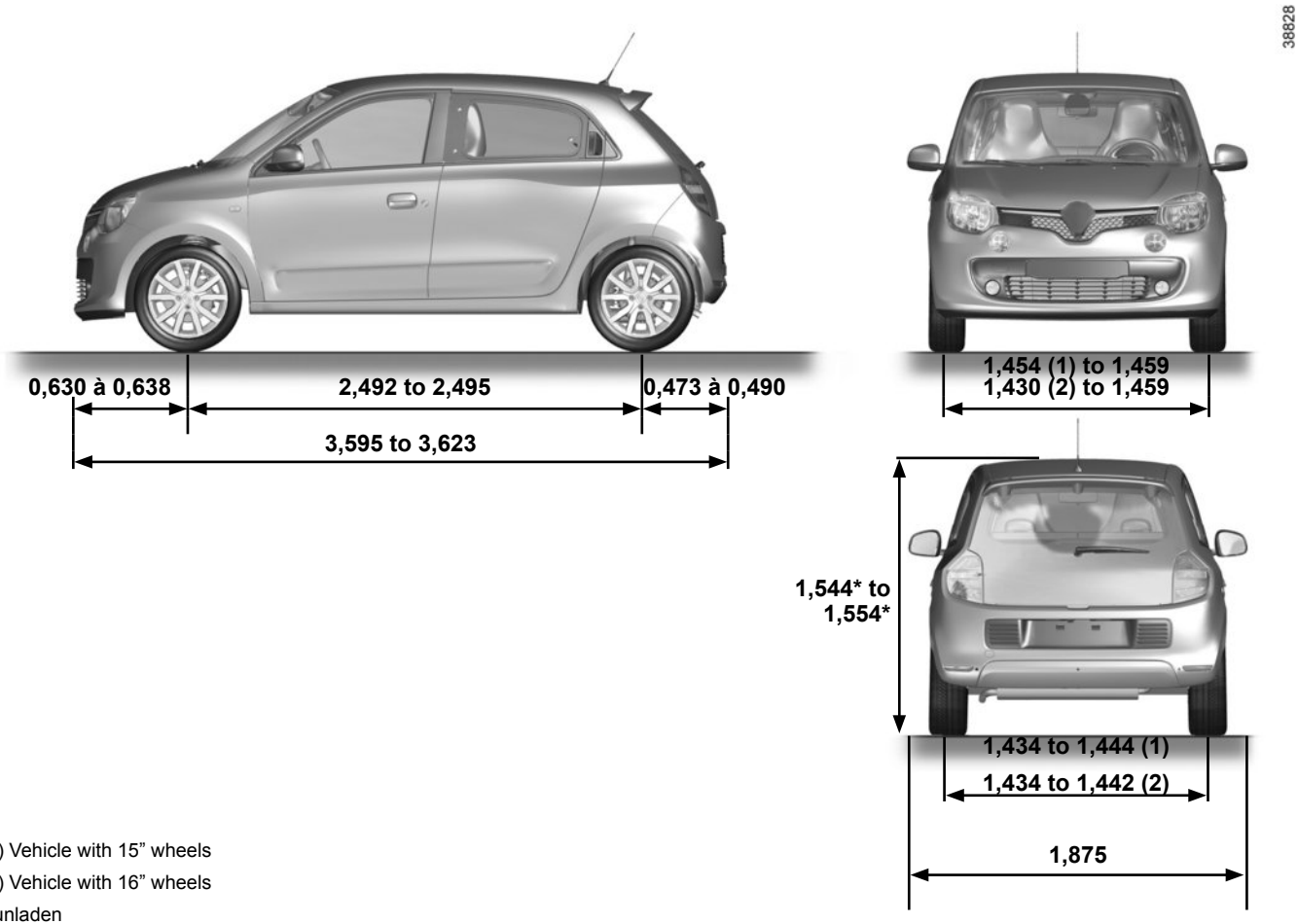

(1) Vehicle with 15” wheels

(2) Vehicle with 16” wheels

* unladen

ENGINE SPECIFICATIONS

Versions	0.9 TCe	1.0
Engine type (see engine plate)	H4B	H4D
Cubic capacity (cc)	898	999
Type of fuel **Octane rating**	Petrol It is **essential** that you use unleaded petrol of the octane rating stated on the label inside the fuel filler flap. Refer to the information on “Fuel tank” in Section 1.	
Fuel types that meet European standards and are compatible with the engines of vehicles sold in Europe (in any other case, contact an Approved Dealer).	E5 Unleaded petrol compliant with standard **EN 228** contains up to 5 % ethanol in volume. E10 Unleaded petrol compliant with standard **EN 228** contains up to 10 % ethanol in volume.	
Spark plugs	Only use the spark plugs specified for your vehicle’s engine. The type should be marked on a label affixed inside the engine compartment. If it is not then contact an approved Dealer. Fitting spark plugs other than those specified may damage the engine.	

WEIGHTS (in kg)

The weights indicated for a basic vehicle without options: they vary depending on the your vehicle's equipment. Consult your approved Dealer.

Maximum permissible all-up weight (MMAC) **Maximum permissible all-up weight (MMTA)** **Gross Train Weight (MTR)**	Weights are indicated on the vehicle identification plate (refer to the information on "Vehicle identification plates" in Section 6)
Braked Trailer Weight*	Prohibited
Unbraked Trailer Weight*	Prohibited
Permissible nose weight*	Prohibited
Maximum permissible load on roof	60 kg (including the carrying device)

REPLACEMENT PARTS AND REPAIRS

Original parts are based on strict specifications and are subject to highly-specialised tests. Therefore, they are of at least the same level of quality as the parts fitted originally.

If you always fit genuine replacement parts to your vehicle, you will ensure that it performs well. Furthermore, repairs carried out within the manufacturer's Network using original parts are guaranteed according to the conditions set out on the reverse of the repair order.

SERVICE SHEETS (1/6)

VIN: .....

Date: Miles (Km): Invoice number:		Comments/miscellaneous
Type of operation: Service □ ..... □ **Anti-corrosion check:** OK □ Not OK* □ *See specific page	**Stamp**	

Date: Miles (Km): Invoice number:		Comments/miscellaneous
Type of operation: Service □ ..... □ **Anti-corrosion check:** OK □ Not OK* □ *See specific page	**Stamp**	

Date: Miles (Km): Invoice number:		Comments/miscellaneous
Type of operation: Service □ ..... □ **Anti-corrosion check:** OK □ Not OK* □ *See specific page	**Stamp**	

SERVICE SHEETS (2/6)

VIN: .....

Date: Miles (Km): Invoice number:		Comments/miscellaneous
Type of operation: Service □ ..... □ **Anti-corrosion check:** OK □ Not OK* □ *See specific page	**Stamp**	

Date: Miles (Km): Invoice number:		Comments/miscellaneous
Type of operation: Service □ ..... □ **Anti-corrosion check:** OK □ Not OK* □ *See specific page	**Stamp**	

Date: Miles (Km): Invoice number:		Comments/miscellaneous
Type of operation: Service □ ..... □ **Anti-corrosion check:** OK □ Not OK* □ *See specific page	**Stamp**	

SERVICE SHEETS (3/6)

VIN: .....

Date: Miles (Km): Invoice number:		Comments/miscellaneous
Type of operation: Service □ ..... □ **Anti-corrosion check:** OK □ Not OK* □ *See specific page	**Stamp**	

Date: Miles (Km): Invoice number:		Comments/miscellaneous
Type of operation: Service □ ..... □ **Anti-corrosion check:** OK □ Not OK* □ *See specific page	**Stamp**	

Date: Miles (Km): Invoice number:		Comments/miscellaneous
Type of operation: Service □ ..... □ **Anti-corrosion check:** OK □ Not OK* □ *See specific page	**Stamp**	

SERVICE SHEETS (4/6)

VIN: .....

Date: Miles (Km): Invoice number:		Comments/miscellaneous
Type of operation: Service □ ..... □ **Anti-corrosion check:** OK □ Not OK* □ *See specific page	**Stamp**	

Date: Miles (Km): Invoice number:		Comments/miscellaneous
Type of operation: Service □ ..... □ **Anti-corrosion check:** OK □ Not OK* □ *See specific page	**Stamp**	

Date: Miles (Km): Invoice number:		Comments/miscellaneous
Type of operation: Service □ ..... □ **Anti-corrosion check:** OK □ Not OK* □ *See specific page	**Stamp**	

SERVICE SHEETS (5/6)

VIN: .....

Date: Miles (Km): Invoice number:		Comments/miscellaneous
Type of operation: Service □ ..... □ **Anti-corrosion check:** OK □ Not OK* □ *See specific page	**Stamp**	

Date: Miles (Km): Invoice number:		Comments/miscellaneous
Type of operation: Service □ ..... □ **Anti-corrosion check:** OK □ Not OK* □ *See specific page	**Stamp**	

Date: Miles (Km): Invoice number:		Comments/miscellaneous
Type of operation: Service □ ..... □ **Anti-corrosion check:** OK □ Not OK* □ *See specific page	**Stamp**	

SERVICE SHEETS (6/6)

VIN: .....

Date: Miles (Km):	Invoice number:	Comments/miscellaneous
Type of operation: Service □ ..... □ **Anti-corrosion check:** OK □ Not OK* □ *See specific page	**Stamp**	

Date: Miles (Km):	Invoice number:	Comments/miscellaneous
Type of operation: Service □ ..... □ **Anti-corrosion check:** OK □ Not OK* □ *See specific page	**Stamp**	

Date: Miles (Km):	Invoice number:	Comments/miscellaneous
Type of operation: Service □ ..... □ **Anti-corrosion check:** OK □ Not OK* □ *See specific page	**Stamp**	

ANTICORROSION CHECK (1/5)

If the continuation of the warranty is subject to repair, it is indicated below.

VIN: .....

Corrosion repair operation to be carried out: Date of repair:		**Stamp**
Repair to be carried out: Date of repair:		**Stamp**
Repair to be carried out: Date of repair:		**Stamp**

ANTICORROSION CHECK (2/5)

If the continuation of the warranty is subject to repair, it is indicated below.

VIN: .....

Corrosion repair operation to be carried out: Date of repair:		**Stamp**
Repair to be carried out: Date of repair:		**Stamp**
Repair to be carried out: Date of repair:		**Stamp**

ANTICORROSION CHECK (3/5)

If the continuation of the warranty is subject to repair, it is indicated below.

VIN: .....

Corrosion repair operation to be carried out: Date of repair:		**Stamp**
Repair to be carried out: Date of repair:		**Stamp**
Repair to be carried out: Date of repair:		**Stamp**

ANTICORROSION CHECK (4/5)

If the continuation of the warranty is subject to repair, it is indicated below.

VIN: .....

Corrosion repair operation to be carried out: Date of repair:		**Stamp**
Repair to be carried out: Date of repair:		**Stamp**
Repair to be carried out: Date of repair:		**Stamp**

ANTICORROSION CHECK (5/5)

If the continuation of the warranty is subject to repair, it is indicated below.

VIN: .....

Corrosion repair operation to be carried out: Date of repair:		**Stamp**
Repair to be carried out: Date of repair:		**Stamp**
Repair to be carried out: Date of repair:		**Stamp**

ALPHABETICAL INDEX (1/5)

A

ABS ....1.46, 2.26 → 2.29
accessories....5.25
accessories socket 3.22
additional methods of restraint 1.21
side protection 1.20
to the front seat belts ....1.15 → 1.18
to the rear seat belts 1.19
adjusting your driving position ....1.11 → 1.14, 3.23
advice on antipollution....2.15
air bag....1.15 → 1.21, 1.44
activating the front passenger air bags....1.38
deactivating the front passenger air bags....1.36
air conditioning ....3.4 → 3.12
air vents ....3.2 – 3.3
anti-corrosion check ....6.14 → 6.18
anti-corrosion protection....4.14
anti-lock braking system: ABS ....2.26 → 2.29
antipollution
advice 2.15
ashtray....3.22
audible and visual signals....1.61
automatic gearbox (use)....2.43 → 2.46
automatic gearbox selector lever....2.43 → 2.46

B

battery....4.11, 5.22 → 5.24
troubleshooting ....5.22 → 5.24
battery (remote control) ....5.20 – 5.21
brake fluid 4.9
bulbs
changing ....5.10 → 5.15

C

catalytic converter....2.9
central door locking ....1.2 – 1.3, 1.8 → 1.10
changing a bulb ....5.10 → 5.15
changing gear....2.10, 2.43 → 2.46
child restraint/seat ....1.23 – 1.24, 1.26 → 1.36
child safety....1.7, 1.18, 1.23 – 1.24, 1.26 → 1.36
child seats....1.23 – 1.24, 1.26 → 1.35
children ....1.23 – 1.24, 1.24
children (safety)....1.7
cigar lighter 3.22
cleaning:
inside the vehicle ....4.17 – 4.18
clock ....1.56 – 1.57
closing the doors ....1.6 → 1.10
control instruments ....1.44 → 1.51, 1.56 – 1.57
controls....1.40 → 1.43
courtesy light 3.16, 5.15
cruise control ....1.47, 2.35 → 2.38
crosswind assist 2.27
cruise control-speed limiter....2.32 → 2.38
crosswind assist function....2.27

D

dashboard....1.40 → 1.43
demisting
rear screen....3.4, 3.7 → 3.10
windscreen....3.5, 3.7 → 3.10
dimensions 6.4
dipstick....4.3
display ....1.44 → 1.49
doors/tailgate ....1.4, 1.6 → 1.10
driver assistance....2.26 → 2.42
driver’s position ....1.40 → 1.48
driving....2.3, 2.9, 2.11 → 2.14, 2.26 → 2.29, 2.32 → 2.40, 2.43 → 2.46
driving aids ....2.26 → 2.42
driving position
settings ....1.12 → 1.14

driving recommendations ..... 2.11 → 2.14

E

ECO driving ..... 2.11 → 2.14
ECO mode 2.12
electric beam height adjustment ..... 1.62 – 1.63
electric windows ..... 3.13 – 3.14
electronic stability control: ESC ..... 2.26 → 2.29
emergency brake assist ..... 2.26 → 2.29
emergency braking ..... 2.26 → 2.29
engine
  access 4.2
  technical specifications 6.5
engine access flap 4.2
engine coolant 4.8
engine oil ..... 4.3 → 4.5
engine oil capacity ..... 4.4 – 4.5
engine oil level ..... 4.3 → 4.5
engine specifications 6.3, 6.5
engine standby ..... 2.5 → 2.8
environment 2.16
ESC: electronic stability control ..... 1.46, 2.26 → 2.29
external temperature 1.57

F

faults
  operating faults ..... 5.30 → 5.35
filter
  air filter 4.10
  oil filter ..... 4.4 – 4.5
  passenger compartment filter 4.10
fitting a radio 5.16
fittings ..... 3.17 → 3.21
front engine cover ..... 4.6 – 4.7
front passenger air bag deactivation 1.36
front seat adjustment 1.11
front seats
  adjustment ..... 1.11 – 1.12
fuel
  advice on fuel economy ..... 2.11 → 2.14
  consumption ..... 1.52 – 1.53, 2.11 → 2.14
  filling ..... 1.44, 1.68 – 1.69
  grade ..... 1.68 – 1.69
fuel consumption ..... 1.52 – 1.53, 2.11 → 2.14, 3.11
fuel economy ..... 2.11 → 2.14
fuel filler cap ..... 1.68 – 1.69
fuel level 1.44, 1.49
fuel tank
  capacity 1.68
fuel tank capacity ..... 1.68 – 1.69
fuses ..... 5.17 → 5.19

G

gear lever 2.10
glove box 3.17
grab handle 3.21

H

handbrake 2.10
hands-free telephone integrated control 3.30
hazard warning lights signal 1.61
headlight beam adjustment ..... 1.62 – 1.63
headrest 3.23
heated seats 1.11
heated windscreen ..... 3.7 → 3.10
heating and air conditioning system ..... 3.4 → 3.11
heating system ..... 3.4 → 3.12
Hill Start Assist ..... 2.26 → 2.29
horn 1.61
horn:
  flash 1.61

I
ignition switch ..... 2.2 – 2.3
indicators ..... 1.61, 5.10 → 5.14
indicators:
direction indicators 1.61
instrument panel ..... 1.49 → 1.55
instrument panel ..... 1.44 → 1.55
interior trim
maintenance ..... 4.17 – 4.18
Isofix ..... 1.26 → 1.28

K
keys ..... 1.2 → 1.4

L
lane departure warning ..... 2.30 – 2.31
levels ..... 4.8 → 4.10
levels:
brake fluid 4.9
coolant 4.8
windscreen washer reservoir 4.10
lighting:
exterior ..... 1.58 → 1.63
instrument panel 1.58
interior 3.16, 5.15
lights
adjustment ..... 1.62 – 1.63
changing bulbs ..... 5.10 – 5.11
front ..... 5.10 – 5.11
lights:
adjusting ..... 1.62 – 1.63
brake lights 5.13
dipped beam headlights ..... 1.44, 1.58, 5.10 – 5.11, 5.13
direction indicators ..... 1.44, 1.61, 5.10 – 5.11
fog lights 1.44, 1.60, 5.13
hazard warning 1.61
main beam headlights 1.44, 1.58, 5.10
reversing lights 5.13
side lights ..... 1.58, 5.10 – 5.11, 5.13
load permitted on the roof 6.6
locking the doors ..... 1.4, 1.6 → 1.10
luggage compartment cover 3.26

M
maintenance 2.15
maintenance:
bodywork ..... 4.14 → 4.16
interior trim ..... 4.17 – 4.18
mechanical ..... 4.3, 4.11, 6.8 → 6.13
map reading lights 3.16
methods of restraint in addition to the seat belts ... 1.15 → 1.21
multimedia equipment 3.30, 5.16

N
navigation system 3.30

O
oil change ..... 4.4 – 4.5
opening the doors ..... 1.6 → 1.9
operating faults ..... 1.44 → 1.48, 5.30 → 5.35

P
paintwork
maintenance ..... 4.14 → 4.16
parking distance control ..... 2.39 – 2.40
power-assisted steering 1.22
pretensioners ..... 1.15 → 1.18
puncture ..... 5.2 → 5.6

R
radio 3.30

radio frequency remote control/key
use ....1.2 → 1.4
rear bench seat....3.24
rear lights
number plate lights 5.13
rear seats....1.14
functions 3.24
rear view camera ....2.41 – 2.42
rear view mirrors....1.39
remote control door locking
batteries ....5.20 – 5.21
remote control door locking unit ....1.2 → 1.4
RENAULT ANTI-INTRUDER DEVICE (RAID)....1.10
replacement parts....6.7
reverse gear
selecting....2.10, 2.43 → 2.46
reversing sensor....2.39 – 2.40
roof bars 3.29
roof rack
roof bars....3.29
running in....2.2

S

seat belt pretensioners
front seat belt ....1.15 → 1.18
seat belts ....1.12 → 1.18, 1.21, 1.48
service sheets....6.8 → 6.13
side indicator lights
changing bulbs....5.14
side protection devices....1.20
signals and lights....1.58 → 1.63
speakers
location 5.16
special features of petrol vehicles 2.9
speed limiter ....1.47, 2.32 → 2.34
starting the engine....2.2 – 2.3, 2.5 → 2.8
steering wheel
adjustment 1.22
Stop & Start ....1.47, 2.5 → 2.8
Stop & Start function....2.5 → 2.8
stopping the engine 2.3
storage compartment....3.17 → 3.21
storage compartments....3.17 → 3.21
sun visor 3.20
sunroof....3.15
switching on the vehicle ignition ....2.2 – 2.3

T

tailgate ....3.25, 3.27 – 3.28
tanks and reservoirs
brake fluid 4.9
coolant 4.8
tanks and reservoirs:
windscreen washer 4.10
technical specifications....6.4 → 6.7
telephone....3.30
temperature regulation ....3.7 → 3.12
towing
breakdown ....5.28 – 5.29
towing a caravan 6.6
towing hitch....5.29
towing rings 3.28
towing weights....6.6
transporting children ....1.23 – 1.24, 1.26 → 1.36
transporting objects
in the luggage compartment 3.28
on the roof....6.6
trip computer and warning system...1.44 → 1.48, 1.50 → 1.55
tyre inflation kit....5.3 → 5.6
tyre pressure....2.17 → 2.25, 4.12 – 4.13, 5.8
tyre pressure loss warning....2.17 → 2.25
tyre pressures....4.12 – 4.13

ALPHABETICAL INDEX (5/5)

tyres.....2.14, 2.17 → 2.25, 4.12 – 4.13, 5.7 → 5.9

U
unlocking the doors ..... 1.8 – 1.9

V
variable power-assisted steering..... 1.22
vehicle identification plates..... 6.3
ventilation .....3.2 → 3.12

W
warning lights.....1.44 → 1.55
washing .....4.14 → 4.16
weights 6.6
wheels (safety) .....5.7 → 5.9
windscreen de-icing/demisting .....3.7 → 3.10
windscreen washer.....1.64 → 1.67
wiper blades ..... 5.26 – 5.27
wipers .....1.64 → 1.67
blades ..... 5.26 – 5.27

RENAULT S.A.S. SOCIÉTÉ PAR ACTIONS SIMPLIFIÉE AU CAPITAL DE 533 941 113 € / 13-15, QUAI LE GALLO
92100 BOULOGNE-BILLANCOURT R.C.S. NANTERRE 780 129 987 — SIRET 780 129 987 03591 / TÉL. : 0810 40 50 60
NU 1035-9 – 99 91 040 77R – 10/2017 – Edition anglaise