2009 CHERY Tiggo Service Manual

FOREWORD

This manual contains on-vehicle service and diagnosis procedures for the Chery Tiggo.

A thorough familiarization with this manual is important for proper repair and maintenance. It should always be kept in a handy place for quick and easy reference.

The contents of this manual, including drawings and specifications, are the latest available at the time of printing. As modifications affecting repair or maintenance occur, relevant information supplementary to this volume will be made available at Chery dealers. This manual should be kept up-to-date.

Chery Automobile Company, Ltd. reserves the right to alter the specifications and contents of this manual without obligation or advance notice.

All rights reserved. No part of this book may be reproduced or used in any form or by any means, electronic or mechanical—including photocopying and recording and the use of any kind of information storage and retrieval system—without permission in writing.

NOTE:

This Tiggo service manual only applies to the following engines and transaxles:

- **1.6L with M/T**
- **1.8L with M/T**
- **2.0L with A/T**
- **2.4L with A/T**

CONTENTS

Title	Section
GENERAL INFORMATION	01
ENGINE	02
ELECTRONIC ENGINE CONTROLS	03
FUEL DELIVERY	04
STARTING & CHARGING	05
COOLING	06
EXHAUST	07
TRANSAXLE & TRANSFER CASE	08
DRIVELINE & AXLE	09
SUSPENSION	10
STEERING	11
BRAKES	12
HEATING & AIR CONDITIONING	13
RESTRAINTS	14
BODY & ACCESSORIES	15
WIRING	16
ALPHABETICAL INDEX	AI

Chery Automobile Company, Ltd.
Wuhu, Anhui Province, CHINA

© 2009 Chery Automobile Co., Ltd.
PRINTED NOVEMBER, 2009

Downloaded from www.Manualslib.com manuals search engine

GENERAL INFORMATION
01

CONTENTS

page

Service Information **01-1**

Vehicle Information **01-9**

Electrical Circuit Diagnosis Information **01-15**

Electrical Information **01-20**

SERVICE INFORMATION

HOW TO USE THIS MANUAL 01-2
- Topics 01-2
- Service Procedures 01-2
- Diagnostic Procedures 01-2
- Specifications 01-2

VEHICLE SERVICE PREPARATION 01-3
- Preparation For Vehicle Service 01-3
- Tools and Testing Equipment 01-3
- Special Tools 01-3
- Disconnection of the Negative Battery Cable 01-4

PROPER SERVICE PRACTICES 01-5
- Removal of Parts 01-5
- Component Disassembly 01-5
- Inspection of Parts 01-5
- Arrangement of Parts 01-6
- Cleaning of Parts 01-6
- Component Reassembly 01-6
- Adjustments 01-7
- Rubber Parts and Rubber Tubing 01-7
- Hose Clamps 01-8
- Vise 01-8
- Dynamometer 01-8

Downloaded from www.Manualslib.com manuals search engine

HOW TO USE THIS MANUAL

Topics

This manual contains procedures for performing all required service operations.

The procedures are divided into three basic operations:
- Removal/Installation
- Disassembly/Assembly
- Inspection

Service Procedures

Most repair procedures begin with an illustration. It identifies the components, shows how the parts fit together and describes visual part inspection. Removal & Installation procedures have written instructions.

Service procedures include the following elements:
- Detailed removal & installation instructions
- Integrated torque specifications
- Integrated illustrations
- Component specifications

Diagnostic Procedures

The diagnostic procedures are grouped into the following:

Diagnostic Trouble Codes (DTC)

- DTCs are important hints for repairing malfunctions that are difficult to simulate. Perform the specific DTC diagnostic inspection to quickly and accurately diagnose the malfunction.

Diagnostic Symptoms

- Symptom troubleshooting quickly determines the location of the malfunction according to symptom type.

Specifications

This manual contains specifications that are divided into the following groups:
- Torque specifications
- Clearance specifications
- Capacity specifications

Downloaded from www.Manualslib.com manuals search engine

VEHICLE SERVICE PREPARATION

Preparation For Vehicle Service

- Always be sure to cover fenders, seats and floor areas before starting work.

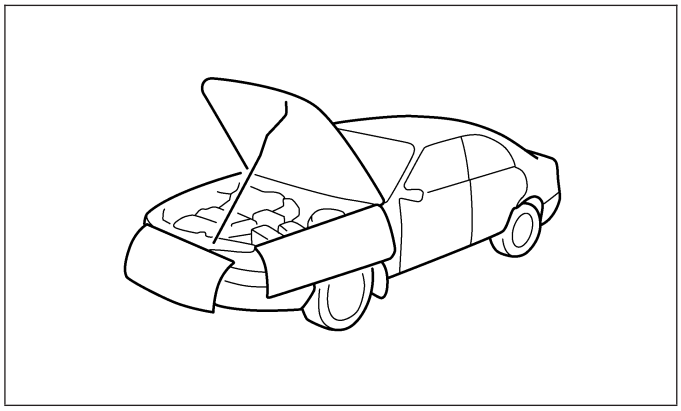

Tools and Testing Equipment

- Be sure that all necessary tools and measuring equipment are available before starting any work.
- Inspect the vehicle and reference any needed service information before starting any work.

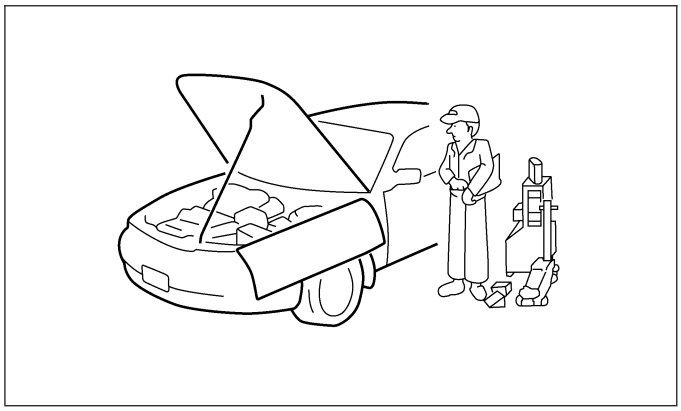

Special Tools

- Use special tools when they are required.

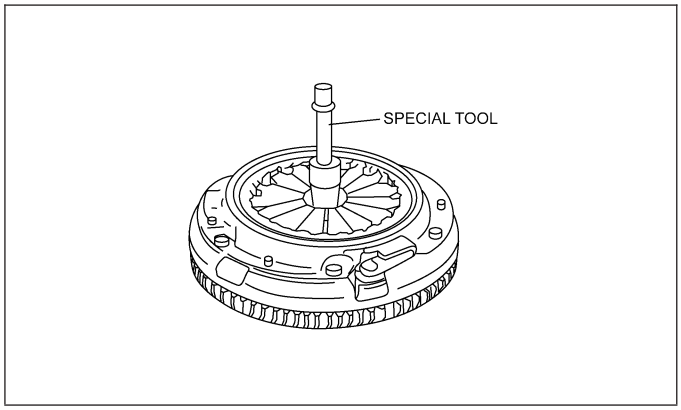

Downloaded from www.Manualslib.com manuals search engine

Disconnection of the Negative Battery Cable

- Before beginning any electrical work, turn the ignition switch to LOCK, disconnect the negative battery cable and then wait two minutes to allow the backup supply of the air bag diagnostic monitor unit to deplete its stored power.
- Disconnecting the battery cable deletes the memories of the clock, audio and DTCs, etc. Therefore, it is necessary to verify those memories before disconnecting the cable.

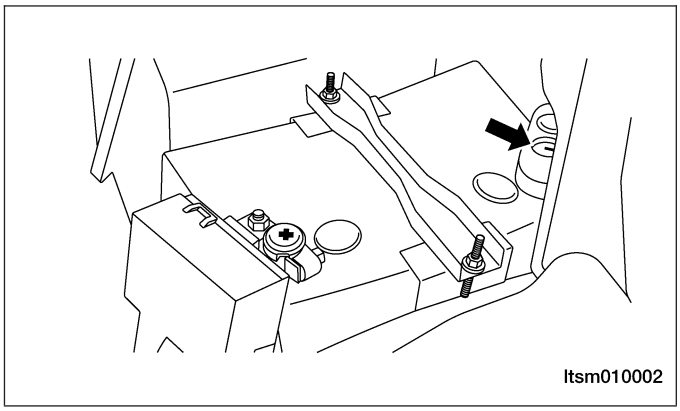

Downloaded from www.Manualslib.com manuals search engine

PROPER SERVICE PRACTICES

Removal of Parts

- While correcting a problem, also try to determine its cause. Begin work only after first determining which parts and subassemblies must be removed and disassembled for replacement or repair. After removing the part, plug all holes and ports to prevent foreign material from entering.

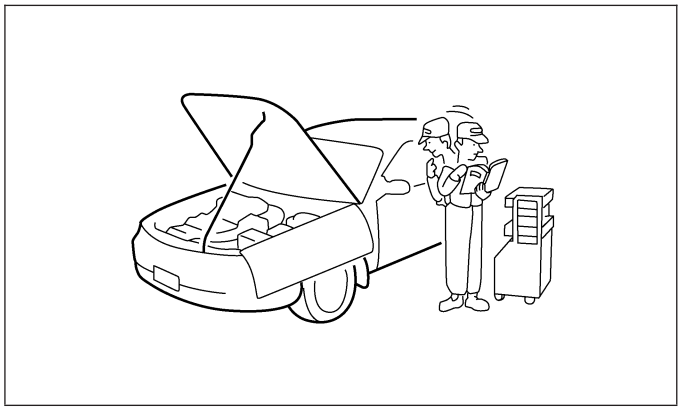

Component Disassembly

- If the disassembly procedure is complex requiring many parts to be disassembled, make sure that all parts are disassembled in a way that will not affect their performance or external appearance. Identify each part so reassembly can be performed easily and efficiently.

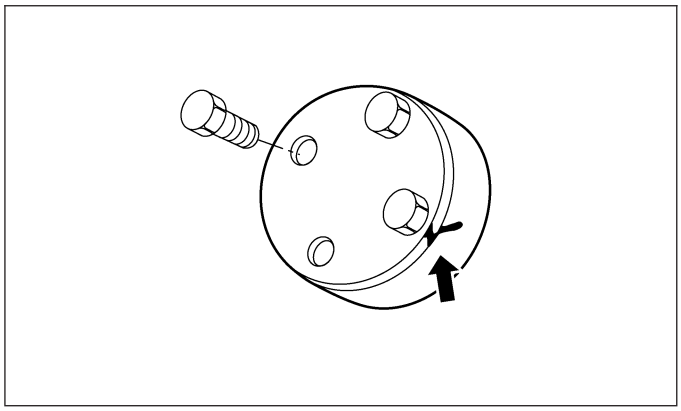

Inspection of Parts

- When removed, inspect each part for possible malfunction, deformation, damage or other problems.

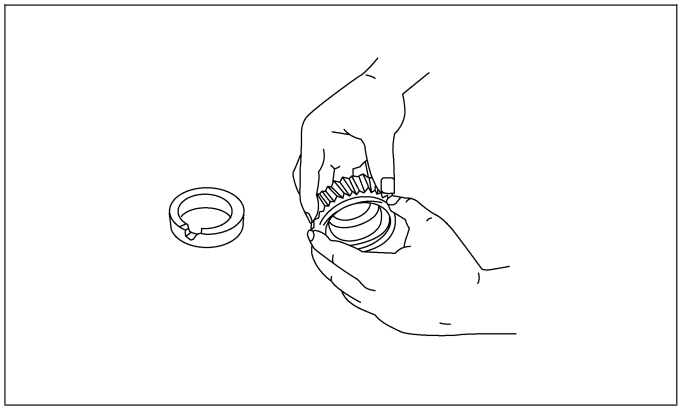

Downloaded from www.Manualslib.com manuals search engine

Arrangement of Parts

- All disassembled parts should be carefully arranged for reassembly.
- Be sure to separate and identify the parts to be replaced from those that will be reused.

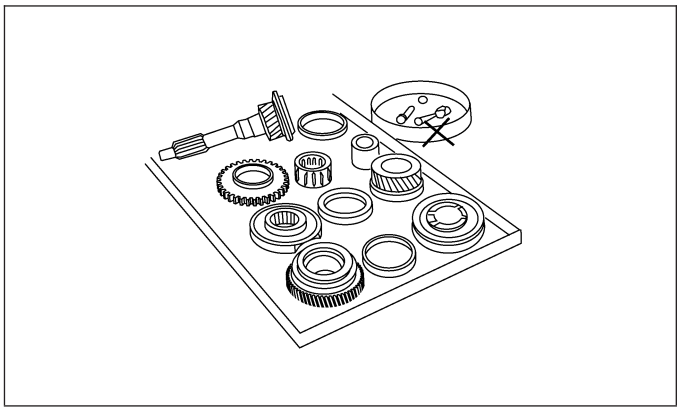

Cleaning of Parts

- Carefully and thoroughly clean all parts to be reused.

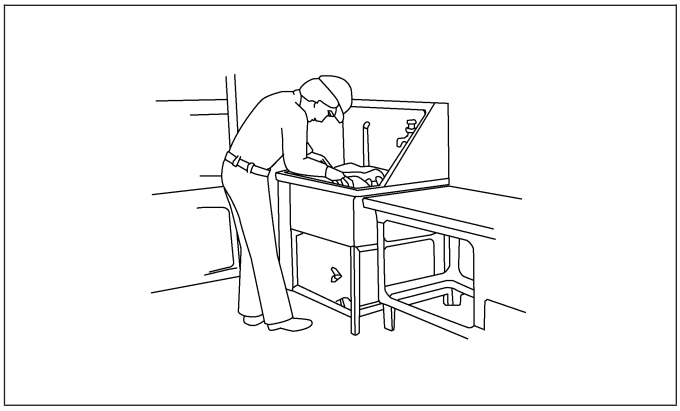

WARNING!

Using compressed air can cause dirt and other particles to fly out causing injury to the eyes. Wear protective eyewear whenever using compressed air.

Component Reassembly

- Standard values, such as torques and certain adjustments, must be strictly observed in the reassembly of all parts. If removed, replace these parts with new ones:
  - Oil seals
  - Gaskets
  - O-rings
  - Lock washers
  - Cotter pins
  - Nylon nuts

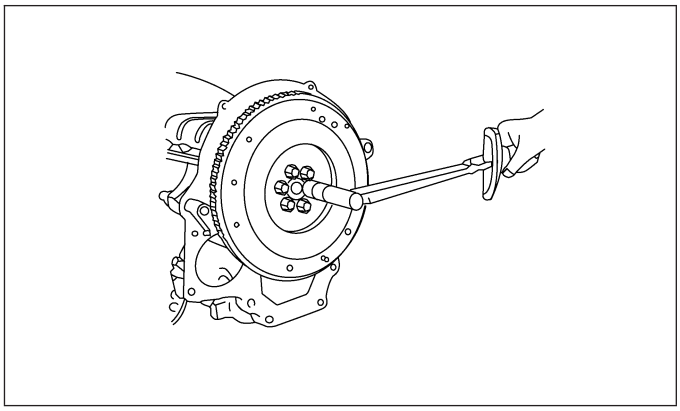

Downloaded from www.Manualslib.com manuals search engine

- Depending on location:
  - Apply sealant and gaskets, or both, to specified locations. When sealant is applied, install parts before sealant hardens to prevent leaks.
  - Apply oil to the moving components of parts.
  - Apply specified oil or grease at the prescribed locations (such as oil seals) before reassembly.

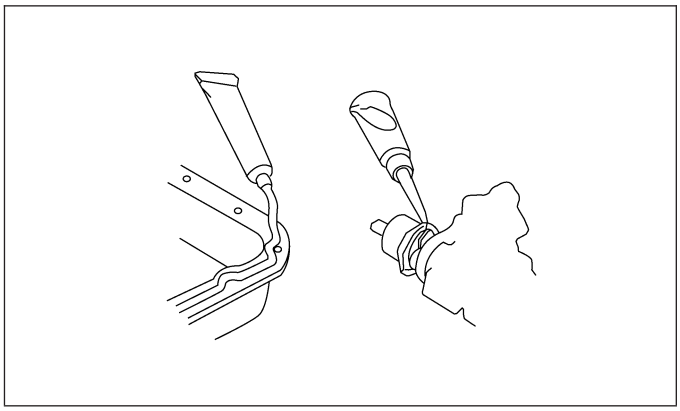

Adjustments

- Use suitable gauges and testers when making adjustments.

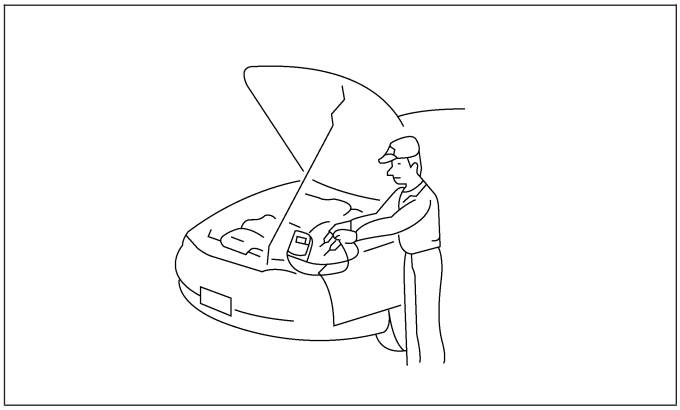

Rubber Parts and Rubber Tubing

- Prevent gasoline or oil from getting on rubber parts or tubing.

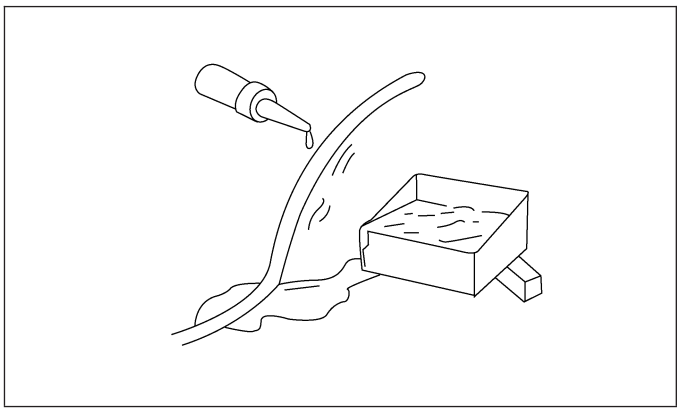

Downloaded from www.Manualslib.com manuals search engine

Hose Clamps

- When reinstalling, position the hose clamp in the original location on the hose and squeeze the clamp lightly with large pliers to ensure a good fit.

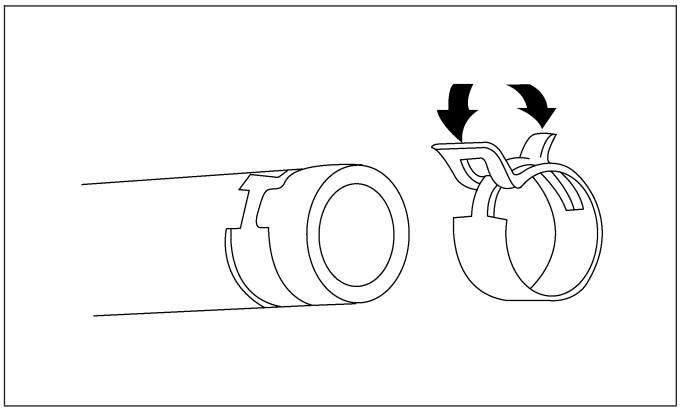

Vise

- When using a vise, put protective plates in the jaws of the vise to prevent damage to parts.

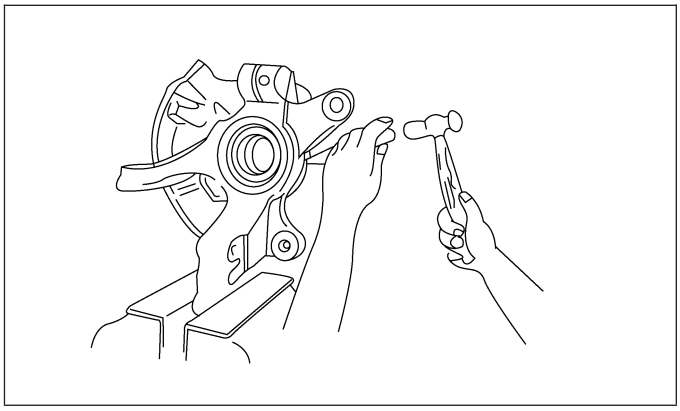

Dynamometer

- When test-running a vehicle on a dynamometer:
  - Place a fan, preferably a vehicle-speed proportional type, in front of the vehicle.
  - Connect an exhaust gas ventilation unit.

WARNING!

Exhaust gases can injure or kill. They contain carbon monoxide (CO), which is colorless and odorless. Breathing it can make you unconscious and can eventually poison you.

  - Cool the exhaust pipes with a fan.
  - Keep the area around the vehicle uncluttered.
  - Monitor the engine coolant temperature gauge.

Downloaded from www.Manualslib.com manuals search engine

VEHICLE INFORMATION

VEHICLE IDENTIFICATION NUMBER (VIN) 01-10
VIN Location 01-10
VIN Identification Codes 01-11

INTERNATIONAL SYMBOLS 01-13
International Symbols 01-13

FASTENER USAGE 01-14
Fastener Usage 01-14

Downloaded from www.Manualslib.com manuals search engine

VEHICLE IDENTIFICATION NUMBER (VIN)

VIN Location

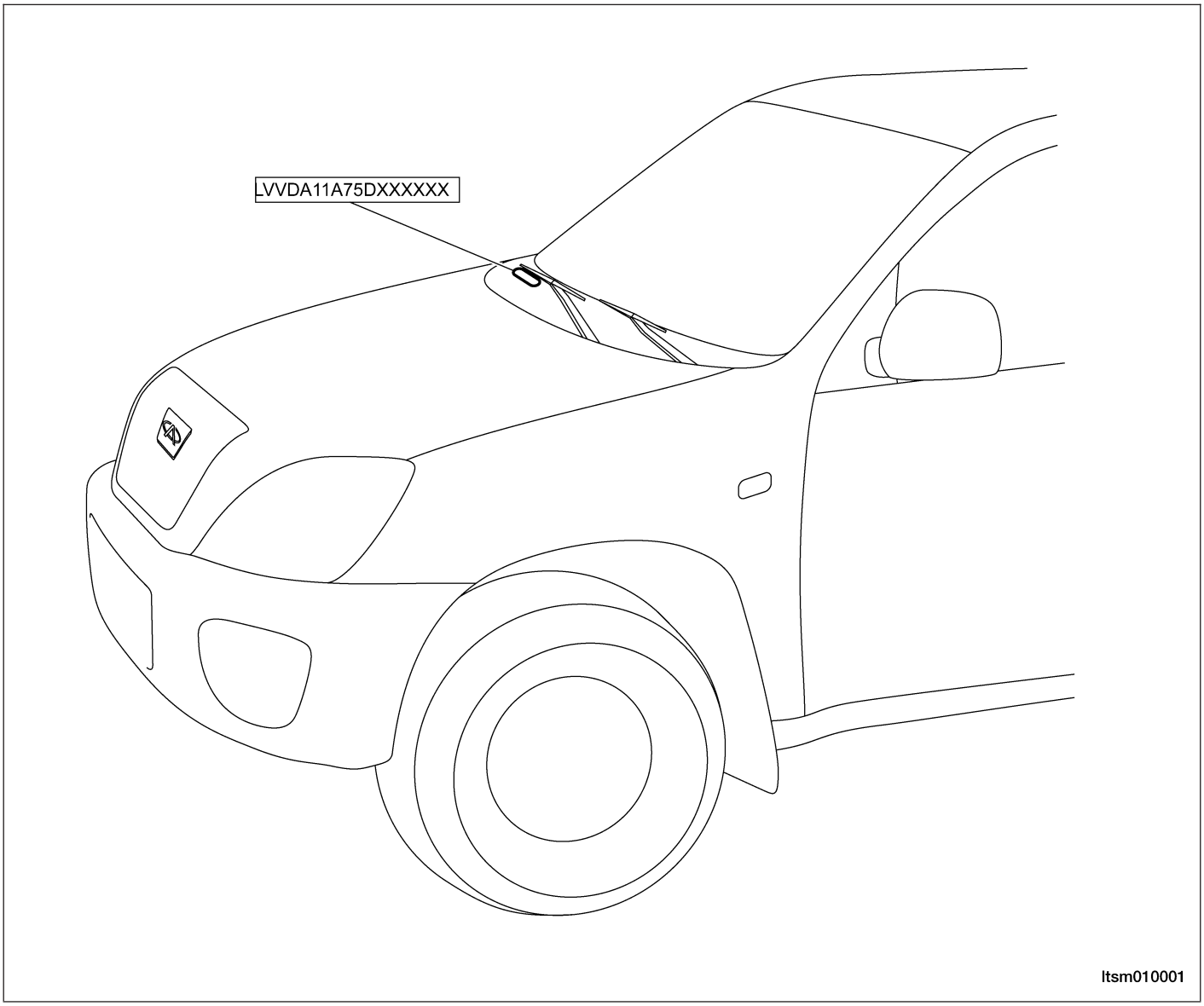

Vehicle Identification Number (VIN) Tag Location

The VIN is printed on a plastic tag attached to the top right corner of the upper instrument panel. The VIN is also found on the vehicle certification (VC) label.

Downloaded from www.Manualslib.com manuals search engine

VIN Identification Codes

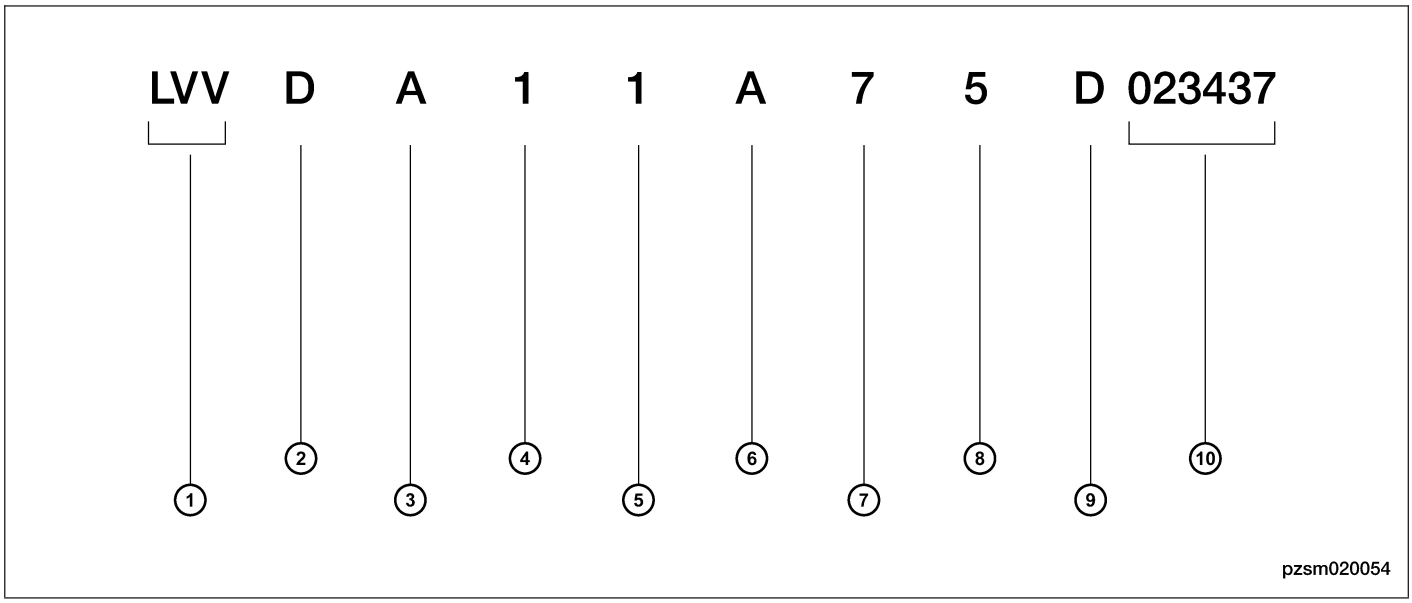

The vehicle identification number (VIN) is a 17-digit combination of letters and numbers.

VIN DIGIT DESIGNATION	DEFINITION
1	World Manufacture Identifier
2	Brand Of The Vehicle
3	Vehicle Chassis Type
4	Transmission Type
5	Engine Type
6	Restraint System
7	Check Digit
8	Model Year
9	Assembly Plant
10	Production Sequence Number

- **Digits #1, #2, #3** The first 3 vehicle identification number (VIN) positions are the world manufacturer identifier:
  - ″LVV″ represents Chery Automobile Co., Ltd.
- **Digit #4** The fourth digit of the VIN code represents the brand of the vehicle:
  - The brand ″Chery″ is represented by the letter ″D″.
- **Digit #5** The fifth digit of the VIN code represents the body configuration of the vehicle:
  - ″A″ represents three compartments, five-door, and 4X2.
  - ″B″ represents two compartments, five-door, and 4X2.
  - ″C″ represents three compartments, four-door, two-lid, and 4X2.
  - ″D″ represents two compartments, five-door, and 4X4.
- **Digit #6** The sixth digit of the VIN code represents the type of transmission:
  - ″1″ represents manual transmission.
  - ″2″ represents automatic transmission.
- **Digit #7** The seventh digit of the VIN code represents the type of engine:
  - ″1″ represents electronically controlled gasoline engines 1.5L - 2.0L (excluding 2.0L) series.
  - ″2″ represents engines smaller than 1.5L (excluding 1.5L).
  - ″4″ represents 2.0L - 2.5L engines (excluding 2.5L).

Downloaded from www.Manualslib.com manuals search engine

- **Digit #8** The eighth digit of the VIN code represents the restraint rystem:
  - ″A″ represents manual safety belts.
  - ″B″ represents manual safety belts plus air bags in the front row.
- **Digit #9** The ninth digit of the VIN code is the check digit:
  - It is to check accuracy of VIN record, and is made out through computation after confirming the other sixteen digits of the VIN.
- **Digit #10** The tenth VIN position represents the model year code:
  - ″5″ represents the year 2005.
- **Digit #11** The eleventh VIN position represents the assembly plant code:
  - ″D″ represents the ″Chery Automobile Co., Ltd.″
- **Digits #12, #13, #14, #15, #16, #17** The last six VIN positions represent the production sequence number.
  - This represents the actual production number of the vehicle.

Downloaded from www.Manualslib.com manuals search engine

INTERNATIONAL SYMBOLS

International Symbols

The graphic symbols illustrated in the following International Control and Display Symbols chart are used to identify various instrument controls. The symbols correspond to the controls and displays that are located on the instrument panel.

International Control and Display Symbols

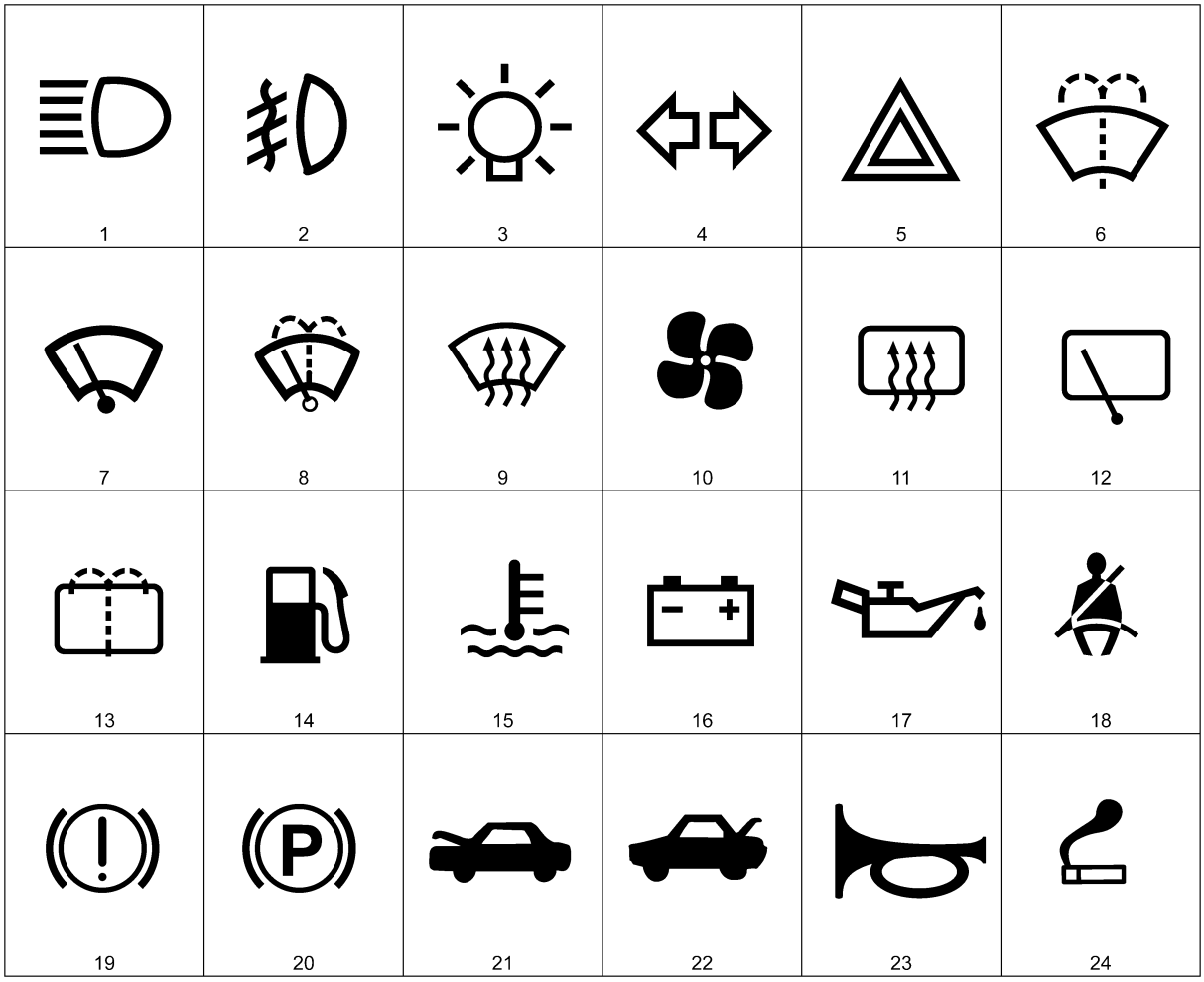

besm010003

1 - High Beam	13 - Rear Window Washer
2 - Fog Lamps	14 - Fuel
3 - Headlamp, Parking Lamps, Panel Lamps	15 - Engine Coolant Temperature
4 - Turn Signals	16 - Battery Charging Condition
5 - Hazard Warning	17 - Engine Oil
6 - Front Windshield Washer	18 - Seat Belt
7 - Front Windshield Wiper	19 - Brake Failure
8 - Front Windshield Wiper and Washer	20 - Parking Brake
9 - Front Windshield Defroster	21 - Hood
10 - Blower Motor Fan	22 - Trunk
11 - Rear Window Defroster	23 - Horn
12 - Rear Window Wiper	24 - Cigarette Lighter

Downloaded from www.Manualslib.com manuals search engine

FASTENER USAGE

Fastener Usage

WARNING!
Use of an incorrect fastener may result in component damage. Failure to follow these instructions may result in personal injury or death.

Fasteners and torque specification references in this Service Manual are identified in metric format.

During any maintenance or repair procedures, it is important to salvage all fasteners (nuts, bolts, etc.) for reassembly. If the fastener is not salvageable, a fastener of equivalent specification must be used.

Downloaded from www.Manualslib.com manuals search engine

ELECTRICAL CIRCUIT DIAGNOSIS INFORMATION

DIAGNOSING ELECTRICAL FAILURES 01-16
Performing Efficient Electrical Circuit Diagnosis and Troubleshooting 01-16
Electrical Circuit Simulation Tests 01-16
Precautions For Handling Control Modules and Electrical Components 01-18
How To Check Electrical Connectors 01-19

Downloaded from www.Manualslib.com manuals search engine

DIAGNOSING ELECTRICAL FAILURES

Performing Efficient Electrical Circuit Diagnosis and Troubleshooting

STEP	DESCRIPTION
Step 1	Obtain detailed information about the conditions and the environment when the electrical incident occurred.
Step 2	Operate the affected system, road test the vehicle if necessary. Verify the parameter of the incident. If the problem cannot be duplicated, refer to “Electrical Failure Simulation Tests”.
Step 3	Gather the proper diagnostic material including the following: • Electrical Power Supply Routing Diagram • System Operation Descriptions • Applicable Service Manual Sections • Check for any Service Bulletins Identify where to begin diagnosis based upon your knowledge of the system operation and the customer comments.
Step 4	Inspect the system for mechanical binding, loose connectors or wiring damage. Determine which circuits and components are involved and diagnose using the Electrical Power Supply Routing Diagram and Harness Layouts.
Step 5	Repair the circuit or replace the component as necessary.
Step 6	Operate the system in all modes. Verify the system functions properly under all conditions. Confirm you have not inadvertently created an additional new incident during your diagnosis or repair steps.

Electrical Circuit Simulation Tests

Often the symptom is not present when the vehicle is brought in for service. If possible, re-create the conditions present at the time of the incident. Doing so may help avoid a No Trouble Found Diagnosis. The following illustrates tests to simulate the conditions/environment under which the owner experiences an electrical incident.

The tests are broken into the seven following topics:
- Vehicle Vibration Test
- Heat Sensitive Test
- Freezing Test
- Water Intrusion Test
- Electrical Load Test
- Cold or Hot Start Up Test
- Voltage Drop Test

NOTE :
Always get a thorough description of the incident from the customer. It is important for simulating the conditions of the problem.

Vehicle Vibration Test

The problem may occur or become worse while driving on a rough road or when the engine is vibrating (idle with A/C on). In such a case, check for a vibration related condition. Refer to the following vehicle areas:

Connectors & Harness

- Determine which connectors and wiring harness would affect the electrical system you are inspecting. Gently shake each connector and harness while monitoring the system for the incident you are trying to duplicate. This test may indicate a loose or poor electrical connection.

NOTE :
Connectors can be exposed to moisture. It is possible for a thin film of corrosion to form on the connector terminals. A visual inspection may not reveal this without disconnecting the connector. If the problem occurs intermittently, perhaps the problem is caused by corrosion. It is a good idea to disconnect, inspect and clean the terminals on related connectors in the system.

Downloaded from www.Manualslib.com manuals search engine

Sensors & Relays

- Gently apply a slight vibration to sensors and relays in the system you are inspecting. This test may indicate a loose or poorly mounted sensor or relay.

Engine Compartment

- There are several reasons a vehicle or engine vibration could cause an electrical complaint. Some of the things to check for are:
  - Connectors not fully seated.
  - Wiring harness not long enough and is being stressed due to engine vibrations or rocking.
  - Wires laying across brackets or moving components.
  - Loose, dirty or corroded ground wires.
  - Wires routed too close to hot components.
- To inspect components under the hood, start by verifying the integrity of the ground connections (See Ground Inspection described later). First, verify that the system is properly grounded. Then check for any loose connections by gently shaking the wiring or components as previously explained. Using the wiring diagrams, inspect the wiring for continuity.

Behind The Instrument Panel

- An improperly routed or improperly clamped harness can become pinched during accessory installation. Vehicle vibration can aggravate a harness which is routed along a bracket or near a mounting screw.
- An unclamped or loose harness can cause wiring to be pinched by seat components (such as slide guides) during vehicle vibration. If the wiring runs under seating areas, inspect wire routing for possible damage or pinching.

Heat Sensitivity Test

The customer's concern may occur during hot weather or after the vehicle has sat for a short time. In such cases you will want to check for a heat sensitive condition.

To determine if an electrical component is heat sensitive, heat the component with a heat gun or equivalent.

CAUTION:
Do not heat components above 60°C (140°F).

If the incident occurs while heat testing the component, replace or properly insulate the component as needed.

Freezing Test

The customer may indicate the incident goes away after the vehicle warms up (winter time). The cause could be related to water freezing somewhere in the wiring/electrical system. There are two methods to check for this:

- The first method is to arrange for the owner to leave the vehicle overnight. Make sure it will get cold enough to duplicate the complaint. Leave the vehicle parked outside overnight. In the morning, do a quick and thorough diagnosis of those electrical components which could be affected.
- The second method is to put the suspect component into a freezer long enough for any water to freeze. Reinstall the part into the vehicle and check for a reoccurrence of the incident. If it occurs, repair or replace the component as needed.

Water Intrusion Test

The incident may occur only during high humidity or in rainy/snowy weather. In such cases the incident could be caused by water intrusion on an electrical part. This can be simulated by soaking the car or running it through a car wash.

Electrical Load Test

The incident may be electrical load sensitive. Perform diagnosis with all accessories (including A/C, rear window defogger, radio, fog lamps) turned on.

Cold or Hot Starting Test

On some occasions an electrical incident may occur only when the vehicle is started cold, or it may occur when the vehicle is restarted hot shortly after being turned off. In these cases you may have to keep the vehicle overnight to make a proper diagnosis.

Downloaded from www.Manualslib.com manuals search engine

Voltage Drop Test

Voltage drop tests are often used to find components or circuits which have excessive resistance. A voltage drop in a circuit is caused by a resistance in the circuit during operation.

- Check the circuit using a Digital Multimeter (DMM).
- When measuring resistance with a DMM, remember that contact by a single strand of wire will give a reading of 0 ohms. This would indicate a good circuit. When the circuit operates, this single strand of wire is not able to carry the current. The single strand will have a high resistance to the current. This will be indicated as a slight voltage drop.
- Unwanted resistance can be caused by the following:
  - Undersized wiring (single strand example)
  - Corrosion on switch contacts
  - Loose wire connections or splices

Precautions For Handling Control Modules and Electrical Components

- Never reverse polarity of battery terminals.
- Only install components specified for the vehicle.
- Before replacing the control module, check the input and output and functions of the components.
- When disconnecting components:
  - Do not apply excessive force when disconnecting a connector.
  - If a connector is installed by tightening bolts, loosen mounting bolt, then remove it by hand.
- When connecting components:
  - Before installing a connector, make sure the terminal is not bent or damaged, and then correctly connect it.
  - When installing a connector by tightening bolts, tighten the mounting bolt until the painted area of the connector becomes even with the surface.
- Do not apply excessive shock to the control module by dropping or hitting it.
- Be careful to prevent condensation in the control module due to rapid temperature changes and do not let water or rain get on it. If water is found in the control unit, dry it fully and then install it in the vehicle.
- Be careful not to let oil get on the control module connector.
- Avoid cleaning the control module with volatile oil.
- When using a DMM, be careful not to let the test probes touch each other causing a short circuit. Prevent the power transistor in the control module from being shorted to damaging battery voltage.
- When checking input and output signals of the control module, use the specified test adapter (if applicable).

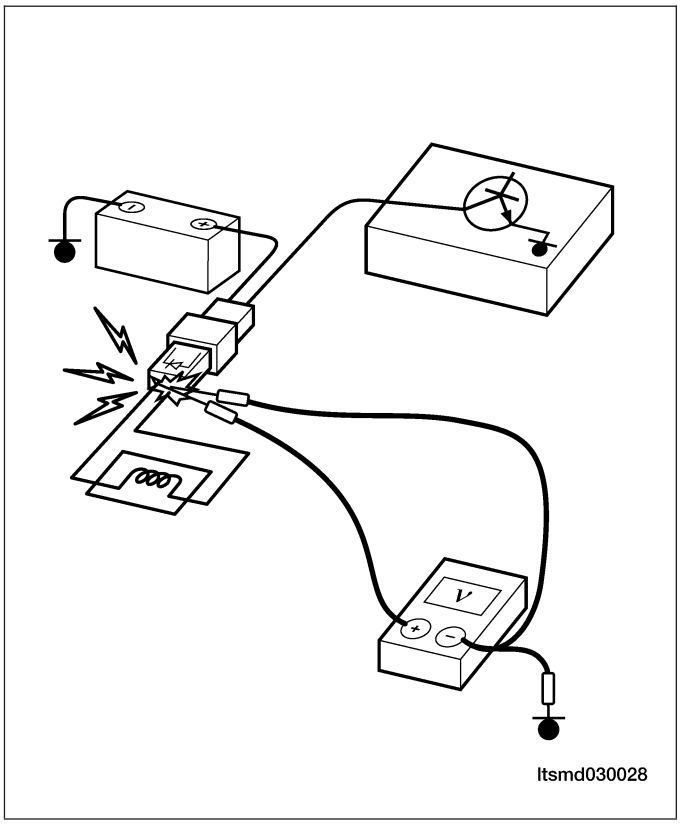

Downloaded from www.Manualslib.com manuals search engine

How To Check Electrical Connectors

Many electrical problems are caused by faulty electrical connections or wiring. It is also possible for a sticking component or relay to cause a problem. Before condemning a component or wiring assembly always, check the electrical connectors for good continuity.

How To Probe Connectors

- Connector damage and an intermittent connection can result from improperly probing the connector during circuit checks.
- The probe of a DMM may not correctly fit the connector cavity. To correctly probe the connector, follow the procedures below using a “T” pin. For the best contact, grasp the “T” pin using an alligator clip.

Probing From Harness Side

- If the connector has a rear cover connector, remove the rear cover before probing the terminal.
- Do not probe waterproof connectors from the harness side. Damage to the seal between the wire and connector may result.

Probing From Terminal Side

- Female Terminal:
  - Do not insert any object into the female connector that is bigger than the male terminal.
- Male Terminal:
  - Carefully probe the contact surface of each terminal using a “T” pin. Do not bend terminal.

How To Check Proper Contact Spring Tension Of Terminal

- An enlarged contact spring of a terminal may create intermittent signals in the circuit.
- If an intermittent open circuit occurs, follow the procedure below to inspect for open wires and enlarged contact spring of female terminal.
  - Use a male terminal which matches the female terminal.
  - Disconnect the suspected faulty connector and hold it terminal side up.
  - While holding the wire of the male terminal, attempt to insert the male terminal into the female terminal.
  - While moving the connector, check whether the male terminal can be easily inserted or not.

NOTE :

If the male terminal can be easily inserted into the female terminal, replace the female terminal.

Downloaded from www.Manualslib.com manuals search engine

ELECTRICAL INFORMATION

HOW TO READ ELECTRICAL SCHEMATICS 01-21
Connector Symbols 01-21
Option Splices 01-22
Electrical Schematic - Example 01-23

HOW TO LOCATE ELECTRICAL SCHEMATICS IN THE SERVICE MANUAL 01-25
Electrical Schematic Index 01-25

Downloaded from www.Manualslib.com manuals search engine

HOW TO READ ELECTRICAL SCHEMATICS

Connector Symbols

- Connector symbols shown from the terminal side are enclosed by a single line and followed by the direction mark.
- Connector symbols shown from the harness side are enclosed by a double line and followed by the direction mark.
- Most of the connector symbols in the wiring diagrams are shown from the terminal side.

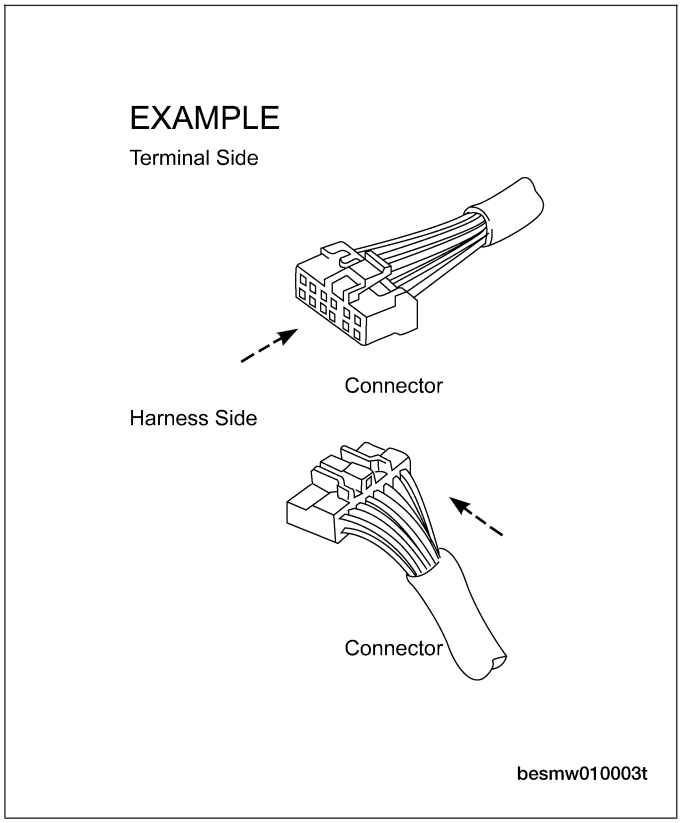

- In electrical schematics, female terminal end views are shown at the bottom of the page for all components that are shown on the schematic page.

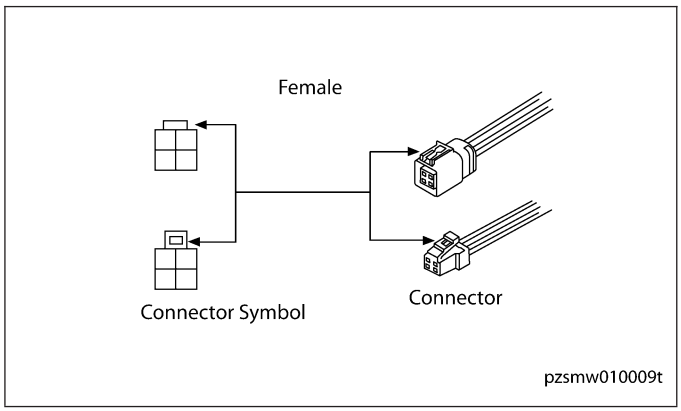

Downloaded from www.Manualslib.com manuals search engine

Option Splices

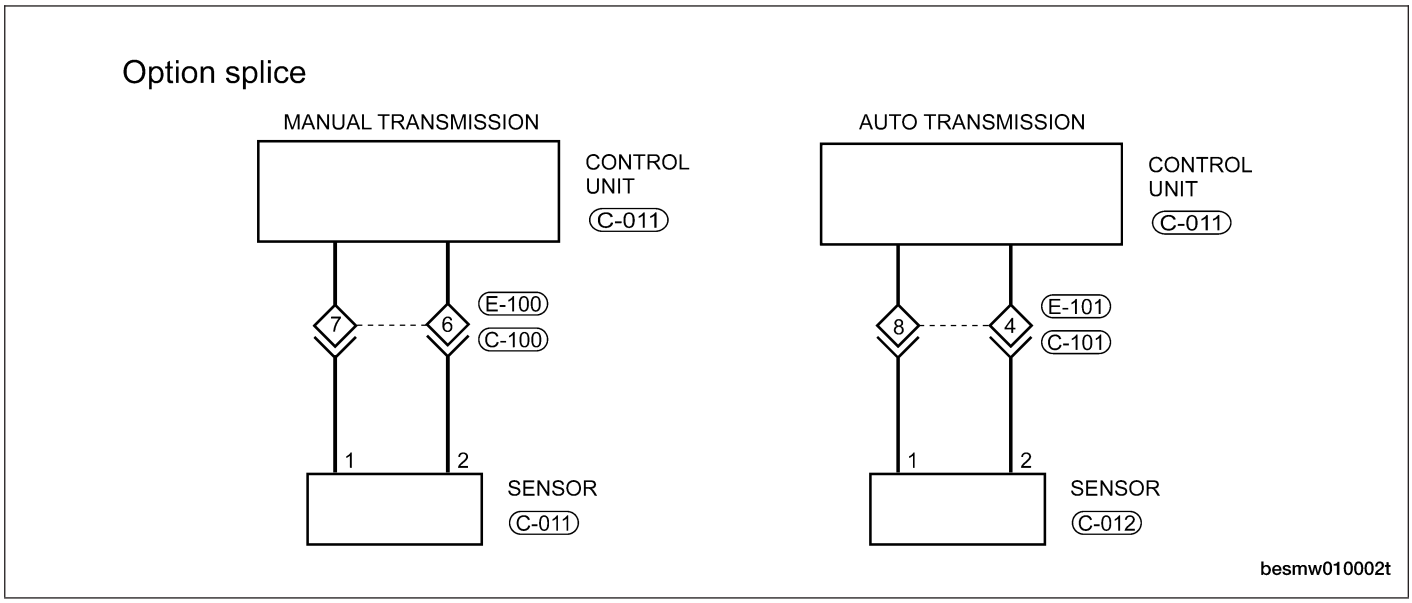

- Option splices are shown with solid diamond-shaped boxes with identification numbers inside.

Downloaded from www.Manualslib.com manuals search engine

Electrical Schematic - Example

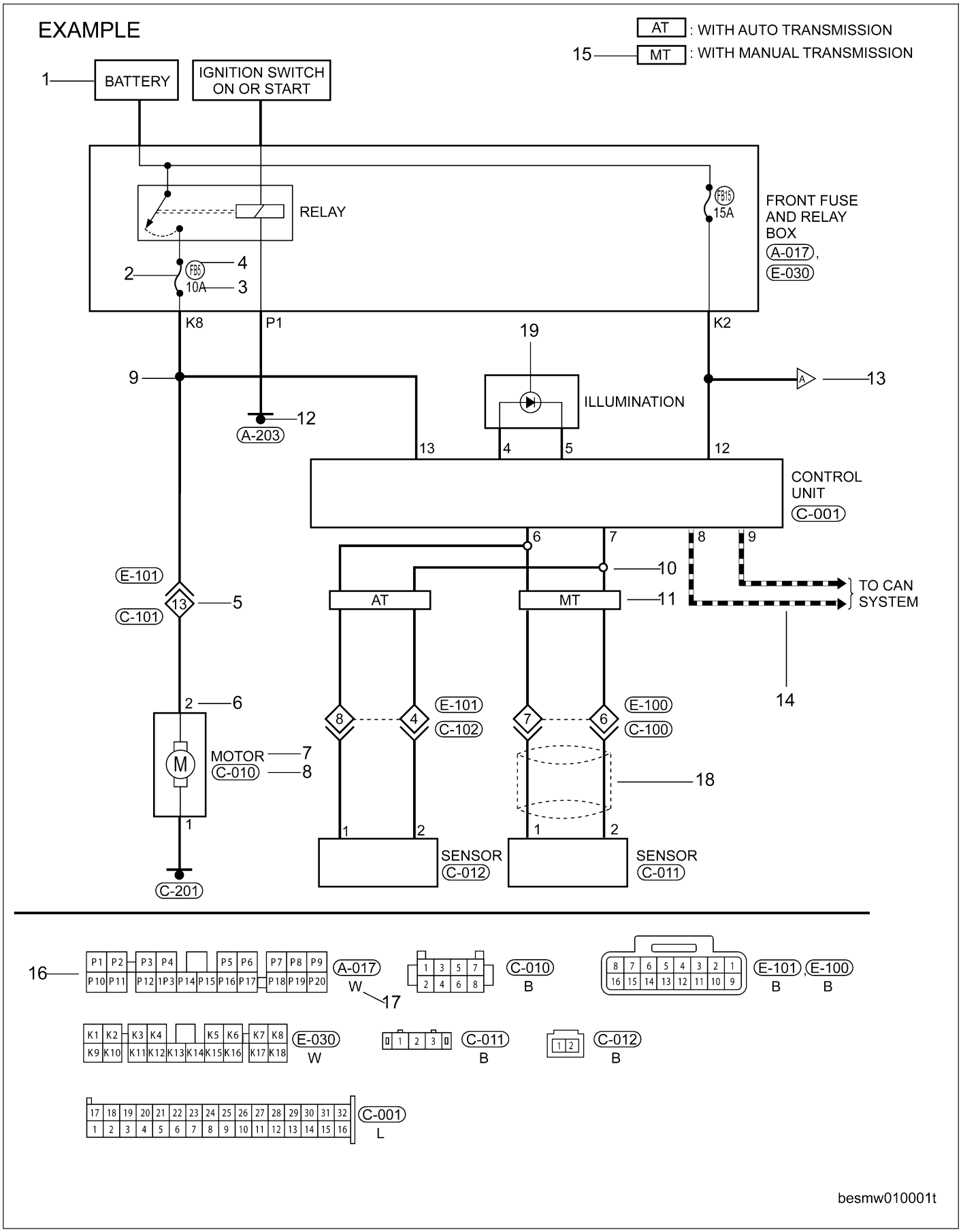

Downloaded from www.Manualslib.com manuals search engine

NUMBER	ITEM	DESCRIPTION
1	Power source	This represents the condition when the system receives battery positive voltage.
2	Fuse	The single line represents that this is a fuse.
3	Current rating	This represents the current rating of the fuse.
4	Fuse location	This represents the location of the fuse in the Power Fuse Box or Front Fuse and Relay Box.
5	Connectors	This represents connector E-101 is female and connector C-101 is male.
6	Terminal number	This represents the terminal number of a connector.
7	Component name	This represents the name of a component.
8	Connector number	This represents the connector number. The letter represents which harness the connector is located in.
9	Splice	The shaded circle represents that the splice is always on the vehicle.
10	Optional splice	The open circle represents that the splice is optional depending on vehicle application.
11	Option abbreviation	This represents that the circuit is optional depending on vehicle application.
12	Ground (GND)	This represents the ground connection. (See Ground Distribution in Section 16 Wiring). Ground connector number has no view face.
13	Page crossing	This arrow represents that the circuit continues to an adjacent page. The ″A″ corresponds with the ″A″ on the adjoining page of the electrical schematic.
14	Data link	This represents that the system branches to another system identified by cell data code.
15	Option description	This represents a description of the option abbreviation used on the page.
16	Connector views	This represents the connector information. This component side is described by the connector symbols.
17	Connector color	This shows a code for the color of the connector: B = Black W = White R = Red G = Green L = Blue Y = Yellow BR = Brown O = Orange GR = Gray
18	Shielded line	The line enclosed by broken line circle represents shielded wire.
19	Light-emitting diodes	As an illumination tool, in the circuit and instrument cluster.

Downloaded from www.Manualslib.com manuals search engine

HOW TO LOCATE ELECTRICAL SCHEMATICS IN THE SERVICE MANUAL

Electrical Schematic Index

The following table shows where to locate a specific electrical schematic for a vehicle component or system. The electrical schematics are found throughout the service manual and are easily identified by their components or vehicle systems.

NOTE :
Some service manual chapters DO NOT contain electrical schematics, and will be identified as **None** in the Component/Vehicle System column.

SERVICE MANUAL CHAPTER	COMPONENT / VEHICLE SYSTEM
01 - General Information	• None
02 - Engine	• None
03 - Electronic Engine Controls	• Engine Control Module (ECM) • Engine Coolant Temperature Sensor • Knock Sensor • Upstream Oxygen Sensor • Downstream Oxygen Sensor • Crankshaft Position Sensor • Camshaft Position Sensor • Ignition Coil • Canister Control Valve • Front Fuse and Relay Box • A/C Compressor • Immobilizer Control Module • Fuel Injectors • Manifold Absolute Pressure Sensor (1.6L Only) • Accelerator Pedal Position Sensor • Vehicle Speed Sensor • Throttle Pedal Position Sensor • Power Steering Switch • Clutch Pedal Switch (if equipped) • Electronic Throttle Control Actuator
04 - Fuel Delivery	• Fuel Injectors • Fuel Level Sensor and Fuel Pump
05 - Starting & Charging	• Starter Motor • Ignition Switch • Clutch Pedal Switch (if equipped) • Generator
06 - Cooling System	• Cooling Fan
07 - Exhaust	• None

Downloaded from www.Manualslib.com manuals search engine

SERVICE MANUAL CHAPTER	COMPONENT / VEHICLE SYSTEM
08 - Transaxle & Transfer Case	• Transaxle Control Module (TCM) • Automatic Transaxle Shifter Selector • Automatic Transaxle Assembly • Manual Transaxle Assembly • Winter Mode Switch • EPDE Solenoid Valve • Backup Lamp Switch • Integrated Torque Management (ITM) Control Module
09 - Driveline & Axle	• None
10 - Suspension	• None
11 - Steering	• Power Steering Switch
12 - Brakes	• Antilock Brake System (ABS) Module • Wheel Speed Sensors • Brake Switch • Parking Brake Switch • Brake Fluid Level Switch
13 - Heating & Air Conditioning	• Manual Temperature Control System • Blower Motor • A/C Compressor • Refrigerant Pressure Switch
14 - Restraints	• Restraints Control Module • Seat Belt Buckle Switch • Front Crash Sensors • Driver Airbag • Passenger Airbag

Downloaded from www.Manualslib.com manuals search engine

SERVICE MANUAL CHAPTER	COMPONENT / VEHICLE SYSTEM
15 - Body & Accessories	• Windshield Wiper Motor • Windshield Washer Motor • Rear Window Defroster • Power Door Locks • Power Windows • Power Mirrors • Sunroof Control Unit • Radio • Interior Lights • Exterior Lights • Oil Pressure Switch • Warning Buzzer • Body Control Module (BCM) • Instrument Cluster • Key Switch • Power Outlet • Data Link Connector • Immobilizer Control Module • Horn
16 - Wiring	• Power Distribution • Front Fuse and Relay Box • Power Fuse Box • Ignition Switch • Ground Distribution

Abbreviation List

TERM	ABBREVIATION
Antilock Brake System	ABS
Accelerator Sensor	AES
Accelerator Pedal Position Sensor	APS
Automatic Temperature Control	ATC
Automatic Transaxle Fluid	ATF
Body Control Module	BCM
Brake Pressure Sensor	BPS
Camshaft Position Sensor	CMP
Clutch Pedal Position Switch	CPP Switch
Crankshaft Position Sensor	CKP
Data Link Connector	DLC
Diagnostic Trouble Code	DTC
Engine Control Module	ECM
Engine Coolant Temperature	ECT
Engine Speed	RPM
Evaporative Emission	EVAP
Evaporative Emission Canister	EVAP Canister
Evaporative Emission System	EVAP System
Exhaust Gas Recirculation Valve	EGR Valve

Downloaded from www.Manualslib.com manuals search engine

TERM	ABBREVIATION
Front Left Wheel Speed Sensor	FLS
Front Right Wheel Speed Sensor	FRS
Rear Left Wheel Speed Sensor	RCS
Rear Right Wheel Speed Sensor	RRS
Ground	GND
Heated Oxygen Sensor	O2S
Idle Air Control	IAC
Intake Air Temperature	IAT
Ignition	IGN
Ignition Control	IC
Immobilizer Control Module	ICM
Injector	INJ
Input Shaft Speed Sensor	ISS Sensor
Knock Sensor	KS
Manifold Absolute Pressure	MAP
Mass Air Flow	MAF
Malfunction Indicator Lamp	MIL
Oil Pressure Switch	OPS
Output Shaft Speed Sensor	OSS Sensor
Positive Crankcase Ventilation Valve	PCV Valve
Power Supply	PWR
SRS Airbag Control System	SRC
Throttle Position Sensor	TPS
Transaxle Control Module	TCM
Turbine Speed Sensor	TSS
Vehicle Identification Number	VIN
Vehicle Speed Sensor	VSS

Downloaded from www.Manualslib.com manuals search engine

ENGINE
02

CONTENTS

page
1.6L & 1.8L Engine Mechanical 02-1
2.0L Engine Mechanical 02-76
2.4L Engine Mechanical 02-149

1.6L & 1.8L ENGINE MECHANICAL

GENERAL INFORMATION 02-3
Description 02-3
Operation 02-3
Specifications 02-3
Special Tools 02-7
Lubrication System 02-10

DIAGNOSIS & TESTING 02-13
Engine Performance Diagnostics 02-13
Engine Mechanical Diagnostics 02-14
Cylinder Compression Pressure Test 02-16
Cylinder Head Gasket Test 02-16

ON-VEHICLE SERVICE 02-17

Accessory Drive Belt 02-17
Removal & Installation 02-17

Air Cleaner Element 02-18
Removal & Installation 02-18

Air Cleaner Housing 02-18
Removal & Installation 02-18

Cylinder Head Cover 02-19
Removal & Installation 02-19

Camshaft 02-20
Removal & Installation 02-20

Cylinder Head 02-23
Removal & Installation 02-23

Front Crankshaft Oil Seal 02-25
Removal & Installation 02-25

Rear Crankshaft Oil Seal 02-27
Removal & Installation 02-27

Engine Mounts 02-29
Removal & Installation - Left Mount 02-29
Removal & Installation - Right Mount 02-30
Removal & Installation - Front Mount 02-30
Removal & Installation - Rear Mount 02-31

Engine Assembly 02-31
Removal & Installation 02-31

Engine Timing Belt 02-38
Removal & Installation 02-38

Exhaust Manifold 02-41
Removal & Installation 02-41

Intake Manifold 02-43
Removal & Installation 02-43

Idler Pulley 02-45
Removal & Installation 02-45

Oil Filter 02-46
Removal & Installation 02-46

Oil Pan 02-47
Removal & Installation 02-47

Oil Pump 02-48
Removal & Installation 02-48

Oil Strainer 02-49
Removal & Installation 02-49

Downloaded from www.Manualslib.com manuals search engine

ENGINE UNIT REPAIR 02-50

Engine Block 02-50
Specifications 02-50
Disassembly 02-50
Inspection 02-52
Assembly 02-52

Pistons 02-53
Specifications 02-53
Disassembly 02-54
Inspection 02-55
Assembly 02-57

Connecting Rods 02-58
Specifications 02-58
Disassembly 02-58
Inspection 02-59
Assembly 02-59

Crankshaft 02-60
Specifications 02-60
Disassembly 02-60
Inspection 02-61
Assembly 02-62

CYLINDER HEAD UNIT REPAIR 02-63

Cylinder Head 02-63
Specifications 02-63
Disassembly 02-63
Inspection 02-65
Assembly 02-65

Camshaft 02-66
Specifications 02-66
Disassembly 02-67
Inspection 02-67
Assembly 02-69

Valve & Valve Guides 02-70
Specifications 02-70
Disassembly 02-70
Inspection 02-71
Assembly 02-72

Valve Springs 02-73
Specifications 02-73
Disassembly 02-73
Inspection 02-74
Assembly 02-75

Downloaded from www.Manualslib.com manuals search engine

GENERAL INFORMATION

Description

The 1.6L & 1.8L in-line four cylinder engines have the following features:

- Dual overhead camshafts
- Four valves per cylinder
- Aluminum cylinder head
- Cast iron cylinder block (1.8L Engine)
- Aluminum cylinder block (1.6L Engine)

Operation

The 1.6L & 1.8L engines utilize 4 valve-per-cylinder and a dual overhead camshaft design. The engines use an individual coil ignition system. The 1.6L engine uses an aluminum cylinder block, and the 1.8L engine is made of cast iron. The bearing caps are integrated into the lower cylinder block assembly. An aluminum oil pan bolts to the bottom of the lower cylinder block. The camshafts are mounted in the cylinder head and act against valve tappets to open and close the valves. The camshafts are driven off the front of the cylinder head by one timing belt. The belt is driven by a sprocket that is located on the crankshaft. The piston assembly is an aluminum piston with a cast iron connecting rod.

The aluminum cylinder head contains dual overhead camshafts with 4 valve-per-cylinder construction. The valves are arranged in two in-line banks. The cylinder head incorporates powdered metal valve guides and seats. The cylinder head is sealed to the block using a multi-layer steel head gasket and retaining bolts.

Specifications

1.6L Engine Specifications

DESCRIPTION	SPECIFICATION
Type	In-Line OHV, DOHC
Number of Cylinders	4
Compression Ratio	10.5:1
Compression Pressure	10 - 15 bar
Max. Compression Pressure Variation Between Cylinders	25%
Stroke	77.5 mm
Bore	81 mm
Displacement	1597 cc
Firing Order	1-3-4-2

1.8L Engine Specifications

DESCRIPTION	SPECIFICATION
Type	In-Line OHV, DOHC
Number of Cylinders	4
Compression Ratio	10.5:1
Compression Pressure	10 - 15 bar
Max. Compression Pressure Variation Between Cylinders	25%
Stroke	89.5 mm
Bore	81 mm
Displacement	1845 cc
Firing Order	1-3-4-2

Downloaded from www.Manualslib.com manuals search engine

Mechanical Specifications

DESCRIPTION	ITEM	STANDARD	LIMIT
Engine Oil Pressure	Lower Idle Speed (800 ± 50 RPM)	1.2 - 1.5 bar	-
	High Idle Speed (2000 RPM)	3.2 - 3.5 bar	-
	High Speed (4000 RPM)	3.7 ± 0.5 bar	-
Engine Block Clearance	Surface Distortion	-	0.15 mm
	Inner Diameter	81.000 - 81.010 mm	-
	Out-Of-Round	-	< 0.008 mm
	Taper	-	< 0.01 mm
Piston Ring Groove Clearance	First Ring	0.04 - 0.08 mm	-
	Second Ring	0.0251 - 0.01 mm	-
Piston Ring End Gap Clearance	First Ring	0.2 - 0.4 mm	0.8 mm
	Second Ring	0.4 - 0.6 mm	1.0 mm
Piston To Piston Pin Clearance	-	0.002 - 0.013 mm	-
Piston Diameter	-	80.946 - 80.964 mm	-
Ring Groove Clearance	First Ring	0.04 - 0.08 mm	-
	Second Ring	0.01 - 0.0251 mm	-
Connecting Rod Radial Clearance	-	0.016 - 0.051 mm	-
Connecting Rod Axial Clearance	-	0.002 - 0.013 mm	-
Diameter Of Crankshaft Main Journals	-	53.981 - 54 mm	-
Diameter Of Crankshaft Rod Journals	-	47.884 - 47.9 mm	-
Out-Of-Round Maximum Of Crankshaft Main Journals	-	-	< 0.008 mm
Axial Clearance Of Crankshaft	-	0.07 - 0.265 mm	-
Radial Clearance Of Crankshaft	-	0.0035 - 0.034 mm	-
Coaxality Crankshaft Main Journal	-	-	< 0.005 mm
Thrust Washer Thickness	-	2.4 - 2.405 mm	-
Oil Clearance Of Crankshaft Rod and Main Journals	-	0.022 mm	0.058 mm
Cylinder Head Flatness	-	-	< 0.04 mm
Intake Valve Deflection	-	-	< 0.02 mm
Exhaust Valve Deflection	-	-	< 0.04 mm
Spring Height	-	47.7 mm	-
Spring Height At 620 Newtons Of Pressure	-	32.0 mm	-

Downloaded from www.Manualslib.com manuals search engine

DESCRIPTION	ITEM	STANDARD	LIMIT
Intake Cam Lobe Height	-	37.15 mm	-
Exhaust Cam Lobe Height	-	37.05 mm	-
Camshaft Journal #1 Outer Diameter	-	31.934 - 31.95 mm	-
Camshaft Journal #2, #3, #4, #5, Outer Diameter	-	23.947 - 23.96 mm	-
Camshaft Cam Bearing #1 Inner Diameter	-	32 - 32.025 mm	-
Camshaft Cam Bearing #2, #3, #4, #5, Inner Diameter	-	24 - 24.021 mm	-
Camshaft Journal #1 Clearance	-	0.05 - 0.091 mm	-
Camshaft Journal #2, #3, #4, #5 Clearance	-	0.04 - 0.074 mm	-
Intake Camshaft Axial Clearance	-	0.15 - 0.20 mm	-
Exhaust Camshaft Axial Clearance	-	0.15 - 0.20 mm	-
Intake Valve Guide Clearance	-	0.012 - 0.043 mm	-
Exhaust Valve Guide Clearance	-	0.032 - 0.063 mm	-
Valve Outer Diameter	Intake Valve	5.98 ± 0.008 mm	-
	Exhaust Valve	5.96 ± 0.008 mm	-
Valve Guide Inner Diameter	Intake Valve	5.4 ± 0.1 mm	-
	Exhaust Valve	5.4 ± 0.1 mm	-
Fringe Thickness On Top Of Valve	Intake Valve	0.3 ± 0.15 mm	-
	Exhaust Valve	0.3 ± 0.15 mm	-
Valve Tilt Angle	Intake Valve	65°	-
	Exhaust Valve	68°	-
Valve Height	Intake Valve	107.998 mm	-
	Exhaust Valve	106.318 mm	-

Torque Specifications

CAUTION:
When torquing a fastener in two steps, DO NOT use a torque wrench for the second step.

DESCRIPTION	TORQUE (N·m)
Accessory Drive Belt Tensioner Pulley Bolt	35
Camshaft Bearing Cap Bolts	11
Clutch Pressure Plate Bolts	25
Connecting Rod Cap Bolts	1st Step: Tighten the bolts to 25 N·m 2nd Step: Tighten the bolts an additional 90°
Crankshaft Holder	28
Crankshaft Main Bearing Cap Bolts	1st Step: Tighten the bolts to 45 N·m 2nd Step: Tighten the bolts an additional 180°

Downloaded from www.Manualslib.com manuals search engine

DESCRIPTION	TORQUE (N·m)
Crankshaft Timing Belt Pulley Bolt	1st Step: Tighten the bolt to 130 N·m 2nd Step: Tighten the bolt an additional 65°
Crankshaft Vibration Damper Bolts	25
Cylinder Head Cover Bolts	11
Cylinder Head Bolts	1st Step: Tighten the bolt to 40 ± 5 N·m 2nd Step: Tighten the bolt an additional 90 ± 5° 3rd Step: Tighten the bolt an additional 90 ± 5°
Dipstick Bracket Bolts	11
Drive Plate Bolts (automatic transaxle)	75
Engine Left Mount Bolt	70
Engine Right Mount Bolt	70
Engine Front Mount Bolt	60
Engine Rear Mount Bolt	60
Engine To Transaxle Bolts	80
Exhaust Manifold Nuts	25
Exhaust Manifold Heat Shield Bolts	15
Exhaust Camshaft Timing Belt Pulley Bolt	120
Flywheel Bolts (manual transaxle)	75
Fuel Rail Bracket Bolts	11
Idler Pulley Bolt	40
Intake Camshaft Timing Belt Pulley Bolt	120
Intake Manifold Bolts	10
Intake Manifold Nuts	11
Intake Manifold Bracket Bolts	25
Lower Idler Pulley Bolt	45
Lower Cylinder Block Bolts	23
Oil Filter	25
Oil Pan Bolts	18
Oil Drain Plug	40
Oil Strainer Bolts	18
Oil Pump Bolts	11 (Apply with Loctite 5910 Thread-Locker)
Rear Timing Cover Bolts	7
Timing Belt Upper Cover Bolts	11
Timing Belt Lower Cover Bolts	11
Timing Belt Tensioner Assembly	27
Timing Belt Tensioner Pulley Bolt	30
Throttle Body Bolts	11
Upper Idler Pulley Bolt	45

Downloaded from www.Manualslib.com manuals search engine

Special Tools

Right Engine Mount Bolt Remover CH-20001	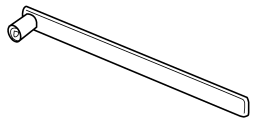 besm020079
Camshaft Seal Installer CH-20002	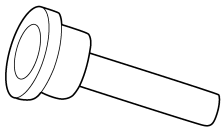 besm020001
Crankshaft Holder CH-20003	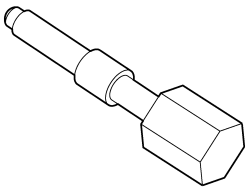 besm020009
Valve Spring Compressor Adaptor CH-20004	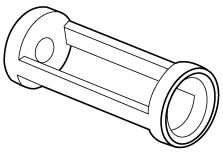 besm020080
Rear Crankshaft Oil Seal Installer CH-20005	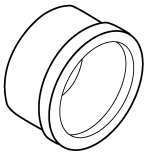 besm020003

Downloaded from www.Manualslib.com manuals search engine

Rear Crankshaft Oil Seal Guide CH-20006	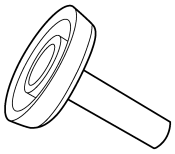 besm020002
Front Crankshaft Seal Installer CH-20007	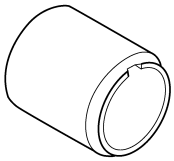 besm020004
Front Crankshaft Seal Guide CH-20008	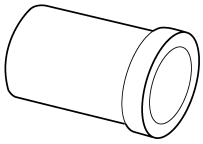 besm020005
Camshaft Holder CH-20010	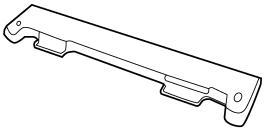 besm020008
Valve Seal Installer CH-20011	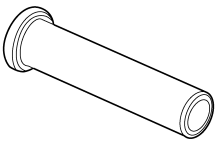 besm020081

Downloaded from www.Manualslib.com manuals search engine

Valve Stem Seal Installer Guide CH-20012	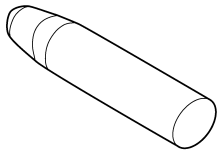 besm020006
Valve Seal Remover CH-20013	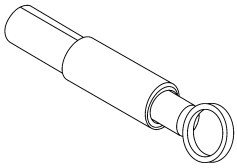 besm020082
Valve Keeper Installer CH-20017	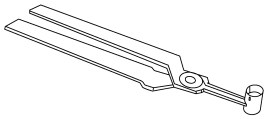 besm020084
Valve Spring Compressor CH-20018	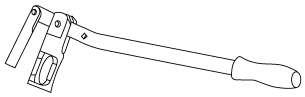 besm020007
Crankshaft Belt Pulley Fixture CH-20019	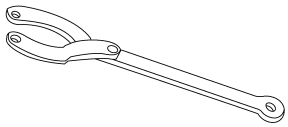 besm020085

Downloaded from www.Manualslib.com manuals search engine

Flywheel Fixture CH-20043	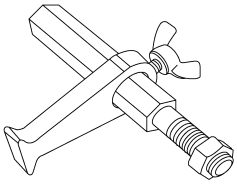 ltsm020211
Engine Hoist	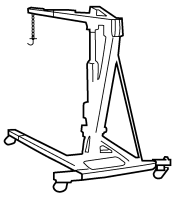 besm020010
Oil Filter Remover CH-10003	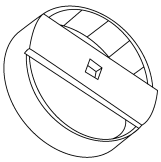 besm020087

Lubrication System

The engine lubrication system operates as follows:

- Oil is drawn into the oil pump through the oil pump strainer tube in the sump of the oil pan.
- Oil is pumped through the oil filter on the cylinder block.
- Oil enters the main oil gallery where it is distributed to the crankshaft main journals and to the cylinder head.
- From the main journals, the oil is routed through cross-drilled passages in the crankshaft to lubricate the connecting rod bearings. Controlled leakage through the crankshaft main bearings and connecting rod bearings is slung radially outward to cool and lubricate the cylinder walls as well as the entire connecting rod, piston and piston ring assembly.
- The engine lubrication system is a full-flow filtration, pressure feed type. The oil pump body is mounted to the engine block. The pump inner rotor is driven by the crankshaft.

Engine Oil Pressure Specifications

Lower Idle Speed (800 ± 50 RPM)	1.2 - 1.5 bar
High Idle Speed (2000 RPM)	3.2 - 3.5 bar
High Speed (4000 RPM)	3.7 ± 0.5 bar

Downloaded from www.Manualslib.com manuals search engine

Engine Lubrication System Exploded View

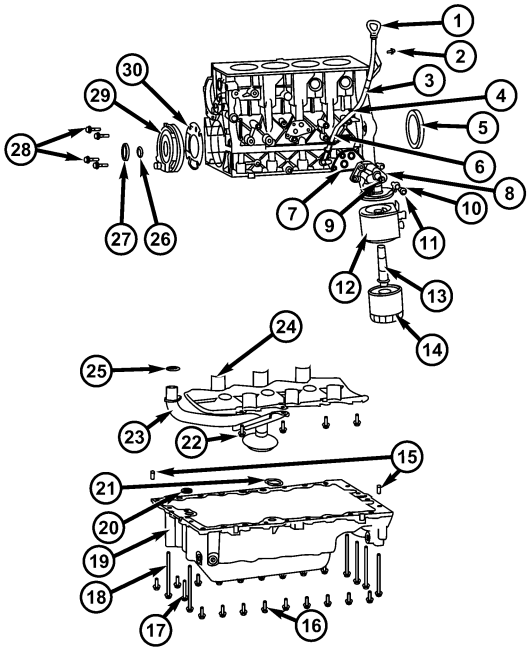

ltsm020161

1 - Oil Dipstick	16 - Oil Pan Bolt
2 - Oil Dipstick Bolt	17 - Oil Pan Bolt
3 - Oil Dipstick Bracket	18 - Oil Pan Bolt
4 - Oil Dipstick Guide	19 - Oil Pan
5 - Crankshaft Rear Oil Seal	20 - O-Ring
6 - O-Ring	21 - O-Ring
7 - Oil Filter Bracket Gasket	22 - Oil Pump Strainer Bolt
8 - Oil Filter Bracket	23 - Oil Pump Strainer
9 - Pressure-Relief Plunger	24 - Baffle Plate
10 - Flange Bolt	25 - O-Ring
11 - Flange Bolt	26 - O-Ring
12 - Oil Cooler	27 - Crankshaft Front Oil Seal
13 - Oil Filter Connector	28 - Oil Pump Bolt
14 - Oil Filter	29 - Oil Pump Assembly
15 - Dowel Pin	30 - Oil Pump Assembly Gasket

Downloaded from www.Manualslib.com manuals search engine

Engine Oil Flow Diagram

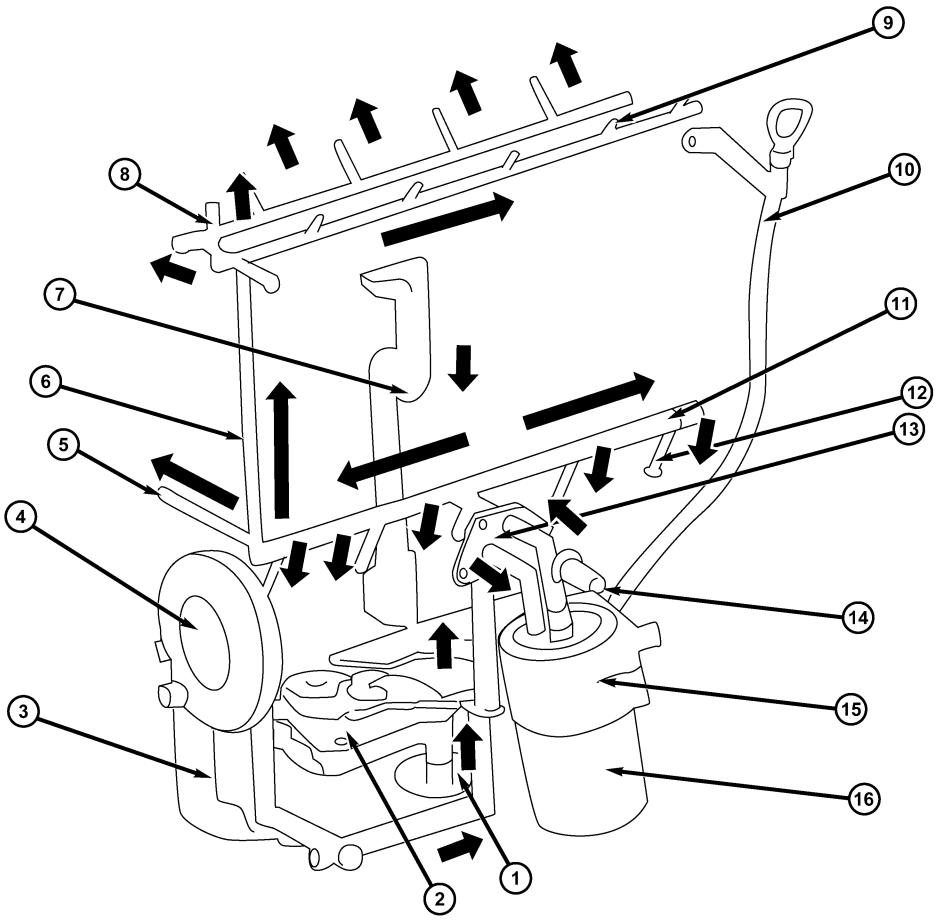

besm020088

1 - Oil Pump Strainer	9 - To Middle Bearing Cap
2 - Baffle Plate	10 - Oil Dipstick
3 - Oil Pan	11 - To Crankcase
4 - Oil Pump	12 - Crankcase Pipe
5 - Turbocharger Inlet Oil Passage (if equipped)	13 - Oil Filter Bracket
6 - To Cylinder Head	14 - Oil Pressure Switch
7 - Oil Return Passage	15 - Oil Cooler
8 - To Front Bearing Cap	16 - Oil Filter

Downloaded from www.Manualslib.com manuals search engine

DIAGNOSIS & TESTING

Engine Performance Diagnostics

CONDITION	POSSIBLE CAUSE	CORRECTION
Engine Does Not Start	1. Weak battery. 2. Corroded or loose battery connections. 3. Faulty starter. 4. Faulty coil(s) or control unit. 5. Incorrect spark plug gap. 6. Contamination in fuel system. 7. Faulty fuel pump. 8. Incorrect timing.	1. Test battery. Charge or replace if necessary. 2. Clean and tighten battery connections. Apply a coat of light mineral grease to terminals. 3. Test starting system. Check for codes. (Refer to Appropriate Diagnostic Information) 4. Test and replace if needed. (Refer to Appropriate Diagnostic Information) 5. Set gap. 6. Clean system and replace fuel filter. 7. Test fuel pump and replace as needed. (Refer to Appropriate Diagnostic Information) 8. Check for a skipped timing belt.
Engine Stalls Or Idles Rough	1. Idle speed too low. 2. Incorrect fuel mixture. 3. Intake manifold leakage. 4. Faulty ignition coil(s).	1. Test minimum air flow. (Refer to Appropriate Diagnostic Information) 2. (Refer to Appropriate Diagnostic Information) 3. Inspect intake manifold, manifold gasket, and vacuum hoses. 4. Test and replace if necessary. (Refer to Appropriate Diagnostic Information)
Engine Loss Of Power	1. Dirty or incorrectly gapped spark plugs. 2. Contamination in fuel system. 3. Faulty fuel pump. 4. Incorrect valve timing. 5. Leaking cylinder head gasket. 6. Low compression. 7. Burned, warped, excessive clearance, or pitted valves. 8. Plugged or restricted exhaust system. 9. Faulty ignition coil(s). 10. Burned spark plugs.	1. Clean spark plugs and set gap. 2. Clean system and replace fuel filter. 3. Test and replace if necessary. (Refer to Appropriate Diagnostic Information) 4. Correct valve timing. 5. Replace cylinder head gasket. 6. Test compression of each cylinder. 7. Replace valves. 8. Perform exhaust restriction test. Install new parts. 9. Test and replace if necessary. (Refer to Appropriate Diagnostic Information) 10. Replace spark plugs.

Downloaded from www.Manualslib.com manuals search engine

CONDITION	POSSIBLE CAUSE	CORRECTION
Engine Miss On Acceleration	1. Dirty or incorrectly gapped spark plugs. 2. Contamination in fuel system. 7. Burned, warped, excessive clearance, or pitted valves. 4. Faulty ignition coil(s).	1. Clean spark plugs and set gap. 2. Clean fuel system and replace fuel filter. 3. Replace valves. 4. Test and replace if necessary. (Refer to Appropriate Diagnostic Information)
Engine Miss At High Speed	1. Dirty or incorrect spark plug gap. 2. Faulty ignition coil(s). 3. Dirty fuel injector(s). 4. Contamination in fuel system.	1. Clean spark plugs and set gap. 2. Test and replace if necessary. (Refer to Appropriate Diagnostic Information) 3. Test and replace if necessary. (Refer to Appropriate Diagnostic Information) 4. Clean system and replace fuel filter.

Engine Mechanical Diagnostics

CONDITION	POSSIBLE CAUSE	CORRECTION
Valve Train Noise	1. High or low oil level in crankcase. 2. Thin or diluted oil. 3. Thick oil. 4. Low oil pressure. 5. Worn cam lobe. 6. Worn valve guides. 7. Excessive runout of valve seats on valve faces.	1. Check and correct engine oil level. 2. Change oil to correct viscosity. 3. Change engine oil and filter. 4. Check and correct engine oil level. 5. Install new camshaft. 6. Replace cylinder head. 7. Grind valve seats and replace valves.
Connecting Rod Noise	1. Insufficient oil supply. 2. Low oil pressure. 3. Thin or diluted oil. 4. Excessive bearing clearance. 5. Connecting rod journal out-of-round. 6. Connecting rod out-of-round. 7. Misaligned connecting rods. 8. Connecting rod nuts loose.	1. Check engine oil level. 2. Check engine oil level. Inspect oil pump relief valve and spring. 3. Change oil to correct viscosity. 4. Measure bearings for correct clearance. Repair if necessary. 5. Replace crankshaft or grind surface. 6. Replace connecting rod. 7. Replace bent connecting rods. 8. Tighten the connecting rod nuts.
Main Bearing Noise	1. Insufficient oil supply. 2. Low oil pressure. 3. Thin or diluted oil. 4. Excessive bearing clearance. 5. Excessive end play. 6. Crankshaft journal out-of-round or worn. 7. Loose flywheel or torque converter.	1. Check engine oil level. 2. Check engine oil level. Inspect oil pump. 3. Change oil to correct viscosity. 4. Measure bearings for correct clearance. Repair if necessary. 5. Check thrust bearing for wear on flanges. 6. Replace crankshaft or grind journals. 7. Tighten to correct torque.

Downloaded from www.Manualslib.com manuals search engine

CONDITION	POSSIBLE CAUSE	CORRECTION
Oil Pressure Drop	1. Low oil level. 2. Faulty oil pressure sending unit. 3. Low oil pressure. 4. Clogged oil filter. 5. Thin or diluted oil. 6. Excessive bearing clearance.	1. Check engine oil level. 2. Install new sending unit. 3. Check sending unit and main bearing oil clearance. 4. Install new oil filter. 5. Change oil to correct viscosity. 6. Measure bearings for correct clearance.
Oil Leaks	1. Misaligned or deteriorated gaskets. 2. Loose fastener, broken or porous metal part. 3. Misaligned or deteriorated cup or threaded plug.	1. Replace gasket. 2. Tighten, repair or replace the part. 3. Replace if necessary.
Oil Consumption Or Spark Plugs Fouled	1. PCV system malfunction. 2. Worn, scuffed or broken rings. 3. Carbon in oil ring slots. 4. Rings fitted too tightly in grooves. 5. Worn valve guide(s). 6. Valve stem seal(s) worn or damaged.	1. Check system and repair if necessary. 2. Hone cylinder bores. Install new rings. 3. Install new rings. 4. Remove rings and check grooves. If groove is not proper width, replace piston. 5. Replace cylinder head. 6. Replace seal(s).

Downloaded from www.Manualslib.com manuals search engine

Cylinder Compression Pressure Test

- The result of a cylinder compression pressure test can be utilized to diagnose several engine malfunctions.
- Ensure the battery is completely charged and the engine starter motor is in good operating condition. Otherwise the indicated compression pressures may not be valid for diagnostic purposes.
  - Check engine oil level and add oil if necessary.
  - Disconnect the spark plug wires.
  - Remove all spark plugs from engine (as spark plugs are being removed, check electrodes for abnormal firing indicators fouled, hot, oily, etc.).
  - Record cylinder number of each spark plug for future reference.
  - Disconnect fuel injector electrical connectors.
  - Be sure throttle blade is fully open during the compression check.
  - Insert compression pressure adaptor or the equivalent into each spark plug hole in cylinder head.
  - Crank engine until maximum pressure is reached on gauge. Record each cylinder pressure.
  - Compression should not be less than 1000 kPa and not vary more than 25 percent from cylinder to cylinder.
  - If one or more cylinders have abnormally low compression pressures, repeat the compression test.
  - If the same cylinder or cylinders repeat an abnormally low reading on the second compression test, it could indicate the existence of a problem with the cylinder in question.

NOTE :
The recommended compression pressures are to be used only as a guide to diagnosing engine problems. An engine should not be disassembled to determine the cause of low compression unless some malfunction is present.

Cylinder Head Gasket Test

- A cylinder head gasket leak can be located between adjacent cylinders, between a cylinder and the adjacent water jacket or from an oil passage to the exterior of the engine.
- Possible indications of the cylinder head gasket leaking between adjacent cylinders are:
  - Loss of engine power
  - Engine misfiring
  - Poor fuel economy
- Possible indications of the cylinder head gasket leaking between a cylinder and an adjacent water jacket are:
  - Engine overheating
  - Loss of coolant
  - Excessive steam (white smoke) emitting from exhaust
  - Coolant foaming

Downloaded from www.Manualslib.com manuals search engine

Accessory Drive Belt

Removal & Installation

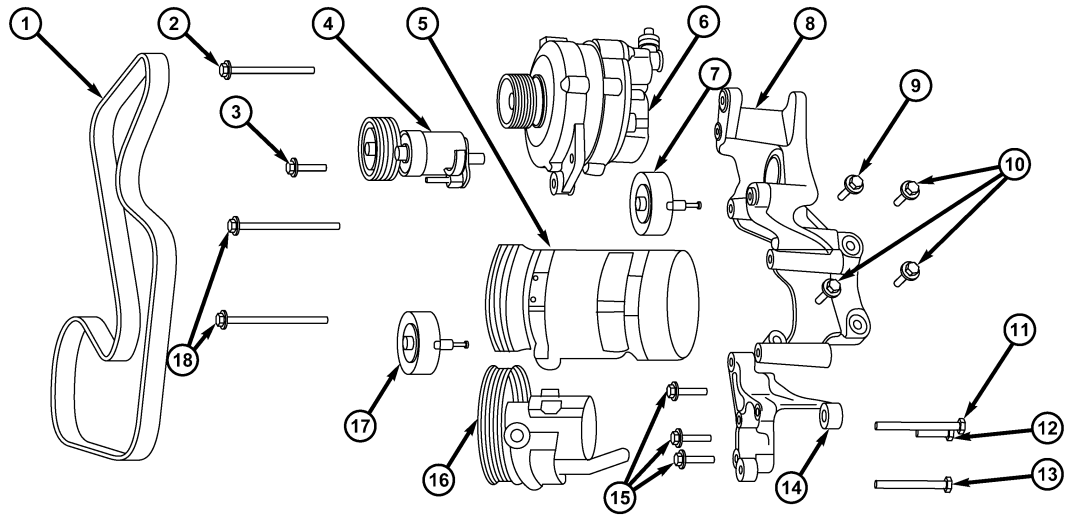

1 - Drive Belt	10 - Generator Bracket Bolts
2 - Generator Bolt	11 - Power Steering Pump Bolt
3 - Tensioner Pulley Bolt	12 - Power Steering Pump Bolt
4 - Tensioner	13 - Power Steering Pump Bolt
5 - Compressor	14 - Power Steering Pump Bracket
6 - Generator	15 - Power Steering Pump Bracket Bolts
7 - Idler Pulley	16 - Power Steering Pump
8 - Generator Bracket	17 - Idler Pulley
9 - Generator Bracket Bolt	18 - Compressor Bolts

WARNING!

Inspect the drive belt only when the engine is stopped.

1. While using a suitable tool and securely holding the hexagonal portion of the drive belt tensioner, rotate the pulley counterclockwise to loosen the drive belt.

WARNING!

Avoid placing hands near the drive belt tensioner while it is being held.

Downloaded from www.Manualslib.com manuals search engine

2. Remove the drive belt.
3. Remove accessory drive belt tensioner pulley bolt (1) if necessary.
   (Tighten: Accessory drive belt tensioner pulley bolt to 35 N·m)

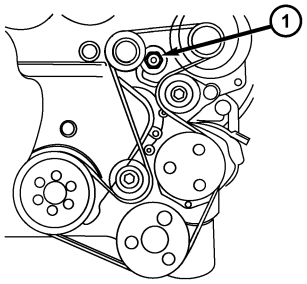

ltsm020196

4. Installation is in the reverse order of removal.

Air Cleaner Element

Removal & Installation

1. Unhook the air cleaner case side clips (1) and raise the air cleaner case (upper).

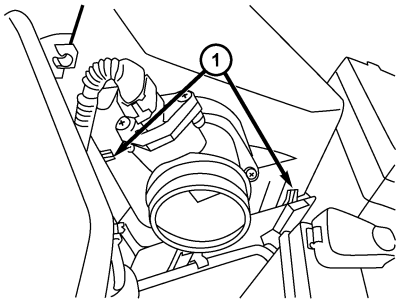

ltsm020238

2. Remove the air cleaner element.
3. Install a new air cleaner element.
4. Installation is in the reverse order of removal.

Installation Notes:

- If necessary, clean the inside of the air cleaner housing before installing new air cleaner element.

Air Cleaner Housing

Removal & Installation

1. Disconnect the negative battery cable.
2. Disconnect the air flow sensor electrical connector (1.8L Engine).

Downloaded from www.Manualslib.com manuals search engine

3. Loosen the clamp (1) between the air intake air hose and the air cleaner and remove the intake air hose.

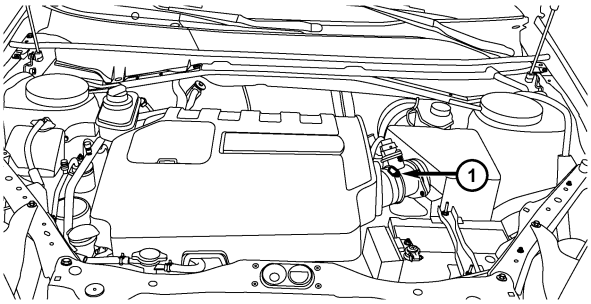

ltsm020242

4. Remove the screws (1) securing the air cleaner housing to its base.

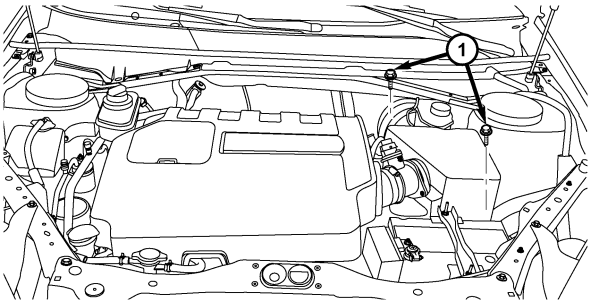

ltsm020243

5. Remove the air cleaner housing.
6. Remove the air cleaner base.
7. Installation is in the reverse order of removal.

Cylinder Head Cover

Removal & Installation

1. Disconnect the negative battery cable.
2. Remove the engine cover.
3. Use compressed air to blow dirt and debris off the cylinder head cover prior to removal.
4. Disconnect the camshaft position sensor electrical connector.
5. Remove the camshaft position sensor (2) and set it aside.
6. Remove the spark plug wires (3) and set them aside.
7. Remove the PCV hose (1) from cylinder head cover.

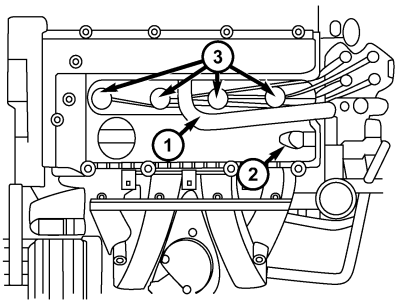

besm020022

Downloaded from www.Manualslib.com manuals search engine

8. Remove the cylinder head cover bolts (1).
   (Tighten: Cylinder head cover bolts to 11 N·m)
9. Remove the cylinder head cover (2) from the cylinder head.
10. Remove the cylinder head cover gasket (3).
11. Installation is in the reverse order of removal.

NOTE :
Install a new cylinder head cover gasket during installation.

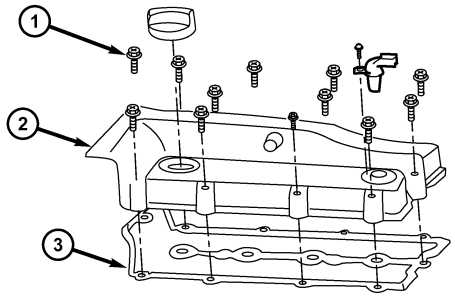

ltsm020198

Camshaft

Removal & Installation

NOTE :
The following special tools are required to perform the repair procedure:
- CH-20002 - Camshaft Seal Installer
- CH-20010 - Camshaft Holder

1. Remove the accessory drive belt (See Accessory Drive Belt Removal & Installation in Section 02 Engine).
2. Remove the engine timing belt (See Engine Timing Belt Removal & Installation in Section 02 Engine).
3. Remove the cylinder head cover (See Cylinder Head Cover Removal & Installation in Section 02 Engine).
4. Remove the intake or exhaust camshaft timing belt pulley.
   (Tighten: Camshaft timing belt pulley bolt to 120 N·m)

Downloaded from www.Manualslib.com manuals search engine

5. Remove the rear timing cover of the timing pulley. (Tighten: Rear timing cover bolts to 7 N·m)

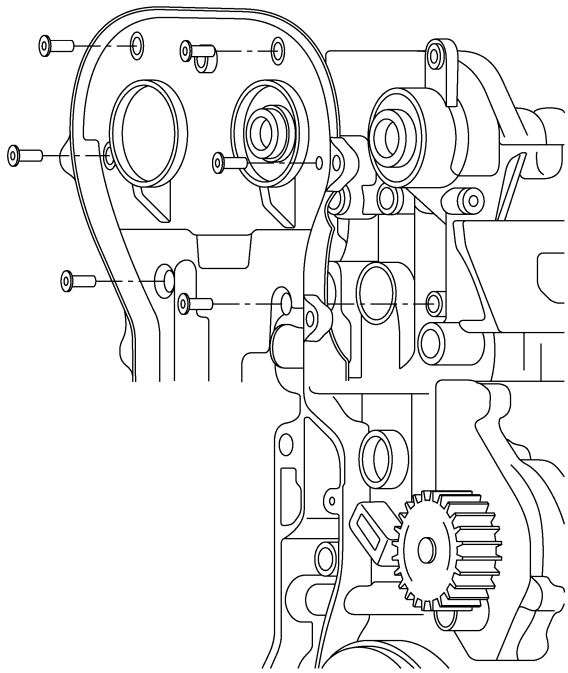

besm020034

6. Remove the camshaft bearing cap bolts. (Tighten: Camshaft bearing cap bolts to 11 N·m)

   NOTE: Equally loosen camshaft bearing cap bolts in several steps.

7. Remove the camshaft bearing caps and place them in proper order.

   NOTE: The camshaft bearing caps are marked for identification.

8. Remove the camshafts and then remove the camshaft seals.

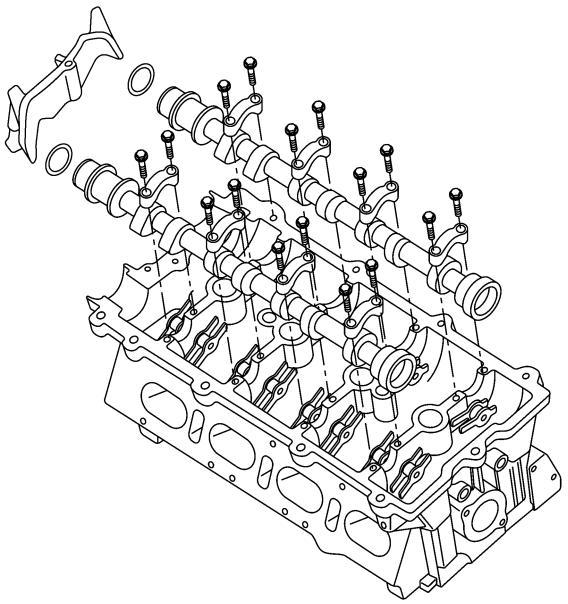

besm020035

9. Installation is in the reverse order of removal.

Downloaded from www.Manualslib.com manuals search engine

Installation Notes:

- Use special tool CH-20010 (1), to install the camshaft holder to hold the camshafts in place.

NOTE :
The camshaft holder will prevent the camshafts from rotating in either direction.

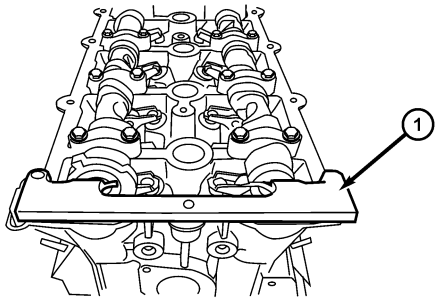

besm020016

- Use special tool CH-20002 (1), to install the camshaft seal.
- Install the intake and exhaust camshaft bearing caps in the proper order.
- Slowly tighten bolts to the specified torque.

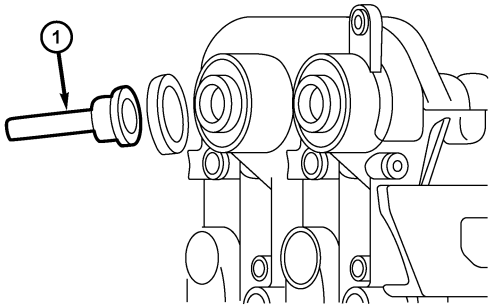

ltsm020215

- Follow the torque sequence as shown.

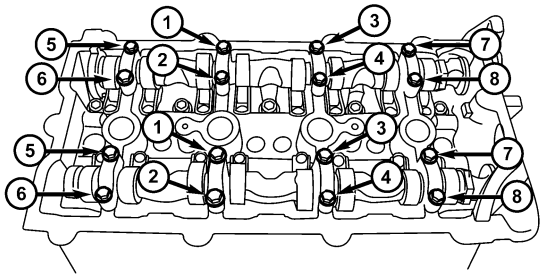

besm020036

Downloaded from www.Manualslib.com manuals search engine

Cylinder Head

Removal & Installation

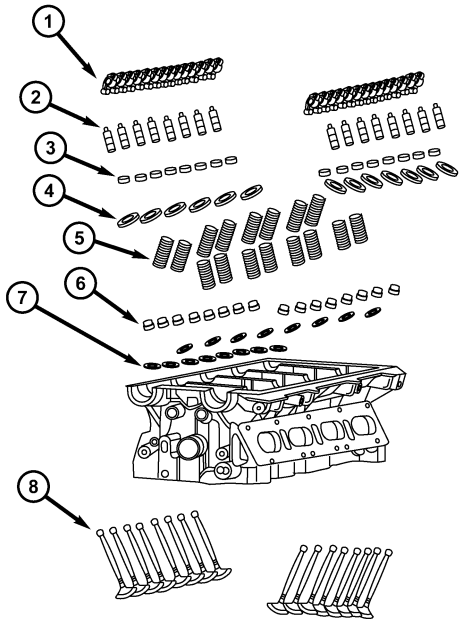

ltsm020167

1 - Rocker Arms	5 - Valve Springs
2 - Hydraulic Tappets	6 - Valve Oil Seals
3 - Valve Keepers	7 - Valve Spring Lower Retainers
4 - Valve Spring Upper Retainers	8 - Valves

NOTE :
Replacement cylinder head comes complete with valves, seals, springs, retainers, keepers, and camshafts.

1. Remove engine timing belt (See Engine Timing Belt Removal & Installation in Section 02 Engine).
2. Remove the cylinder head cover (See Cylinder Head Cover Removal & Installation in Section 02 Engine).
3. Remove the camshafts (See Camshaft Removal & Installation in Section 02 Engine).
4. Remove intake manifold (See Intake Manifold Removal & Installation in Section 02 Engine).
5. Remove exhaust manifold (See Exhaust Manifold Removal & Installation in Section 02 Engine).
6. Remove water pipe and thermostat assembly.

Downloaded from www.Manualslib.com manuals search engine

7. Remove the cylinder head bolts in the order shown.

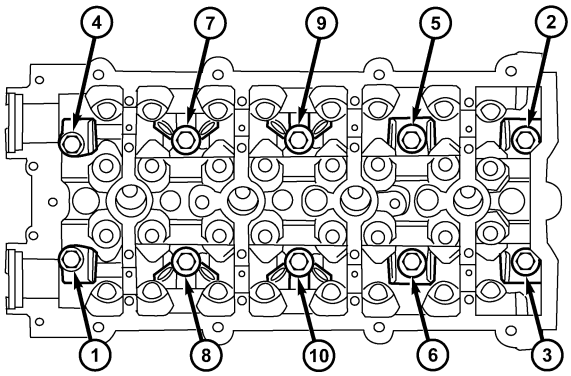

besm020065

8. Remove cylinder head gasket.
9. Installation is in the reverse order of removal.

Installation Notes:

- Ensure cylinder head bolt holes in the block are clean, dry (free of residual oil or coolant), and threads are not damaged.
- The cylinder head bolts should not be reused. The new bolts should be examined before use. If the bolts are stretched, the bolts should be replaced.
- Position the new cylinder head gasket on the engine block with the part number facing up. Ensure gasket is seated over the locating dowels in the block.
- Before installing the bolts, the threads should be lightly coated with engine oil.

Downloaded from www.Manualslib.com manuals search engine

- Install the cylinder head bolts in the order shown.
- Torque the cylinder head bolts in the following three step sequence:
  - 1st Step: Tighten the bolt to 40 ± 5 N·m
  - 2nd Step: Tighten the bolt an additional 90 ± 5°
  - 3rd Step: Tighten the bolt an additional 90 ± 5°

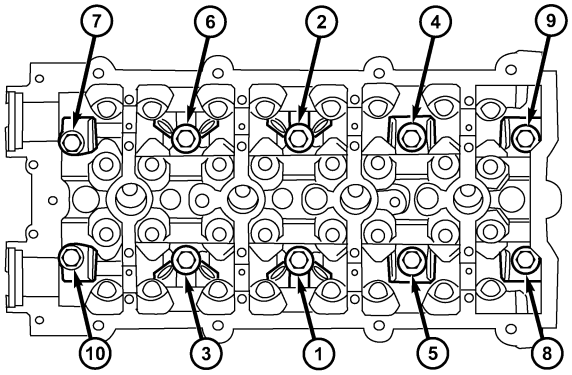

ltsm020236

Front Crankshaft Oil Seal

Removal & Installation

NOTE :
The following special tools are required to perform the repair procedure:
- CH-20007 - Front Crankshaft Seal Installer
- CH-20008 - Front Crankshaft Seal Guide
- CH-20019 - Crankshaft Belt Pulley Fixture

1. Remove the accessory drive belt (See Accessory Drive Belt Removal & Installation in Section 02 Engine).
2. Remove the crankshaft vibration damper bolts (1). (Tighten: Crankshaft vibration damper bolts to 25 N·m)

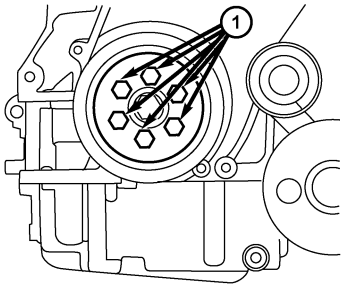

besm020055

3. Remove the engine timing belt (See Engine Timing Belt Removal & Installation in Section 02 Engine).

Downloaded from www.Manualslib.com manuals search engine

4. Remove the crankshaft timing belt pulley bolt (2) from the crankshaft.
   (Tighten: Crankshaft timing belt pulley bolt to 130 N·m and an additional 65°)
5. Remove the key-way from the crankshaft.
6. Use an appropriate tool and remove the front crankshaft oil seal (1).

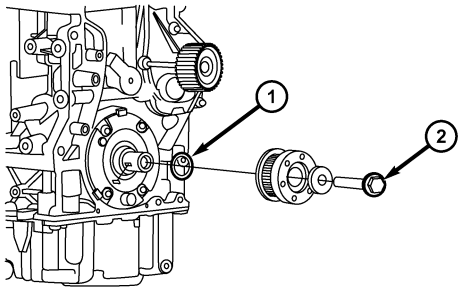

Itsm020199

CAUTION:
Be careful not to damage the front cover seal surface while removing the seal.

7. Installation is in the reverse order of removal.

Installation Notes:

- Lubricate the new front seal with engine oil prior to assembly.
- Use the front crankshaft seal installer CH-20008 (1), to install the new seal.

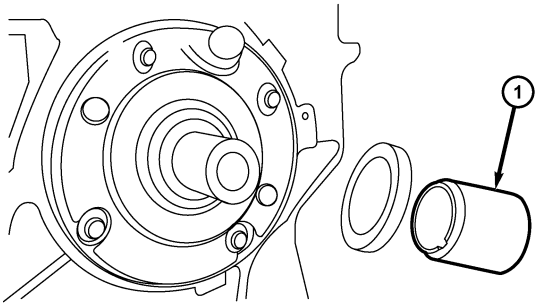

Itsm020216

Downloaded from www.Manualslib.com manuals search engine

Rear Crankshaft Oil Seal

Removal & Installation

NOTE :
The following special tools are required to perform the repair procedure:
- CH-20005 - Rear Crankshaft Oil Seal Installer
- CH-20006 - Rear Crankshaft Oil Seal Guide
- CH-20043 - Flywheel Fixture

1. Remove the transaxle assembly (See Transaxle Assembly Removal & Installation in Section 08 Transaxle & Transfer Case).
2. Using special tool CH-20043 (1), hold the flywheel.

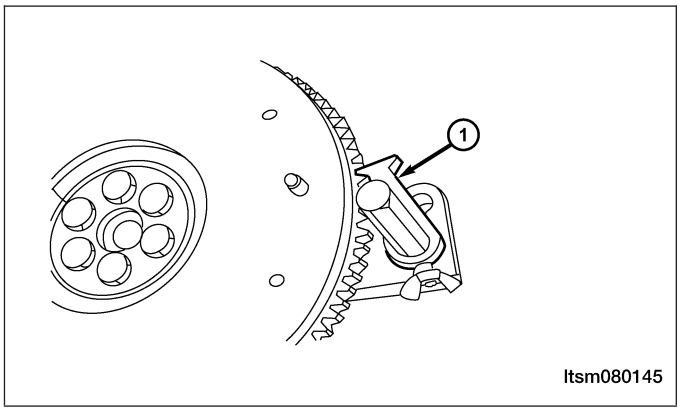

3. Remove the clutch pressure plate retaining bolts (1) and then remove the clutch pressure plate.
   (Tighten: Clutch pressure plate bolts to 25 N·m)

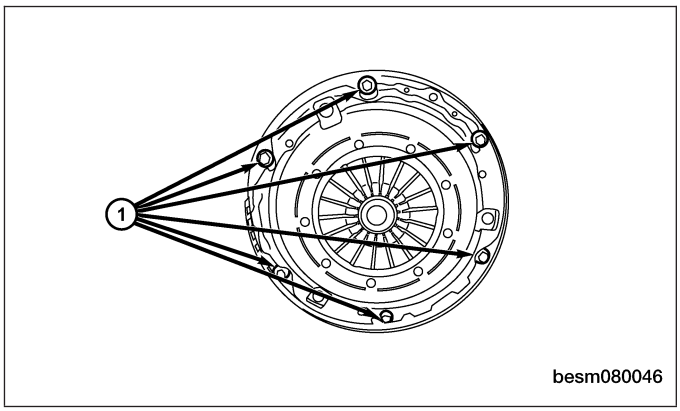

4. Remove the flywheel bolts (1) and then remove the flywheel.
   (Tighten: Flywheel bolts to 75 N·m)

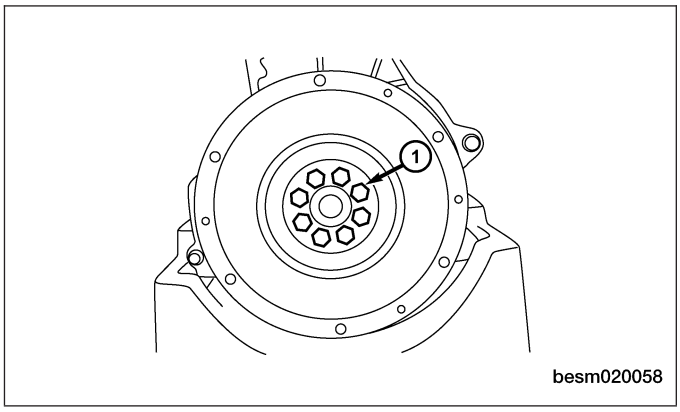

Downloaded from www.Manualslib.com manuals search engine

5. Remove the rear oil seal using a suitable tool.
6. Installation is in the reverse order of removal.

Installation Notes:

- When installing seal, lubricate seal guide with clean engine oil.
- Position the seal over the rear crankshaft seal guide.
- Use special tool CH-20005 (2) CH-20006 (1), to install the rear crankshaft oil seal.
- Ensure that the lip of the seal is facing toward the crankcase during installation.

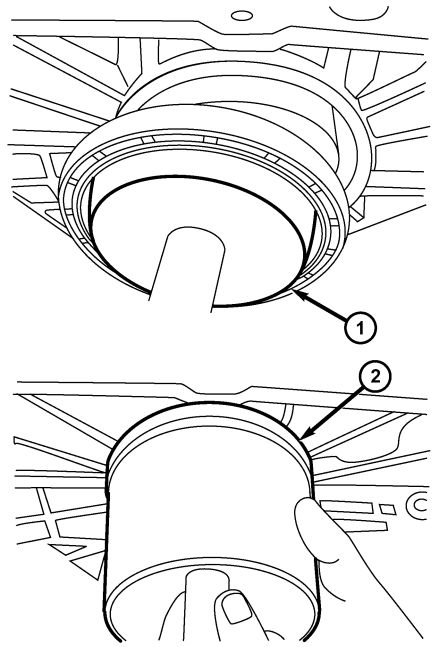

ltsm020217

Downloaded from www.Manualslib.com manuals search engine

Engine Mounts

Removal & Installation - Left Mount

NOTE :
The following special tools are required to perform the repair procedure:
- Engine Hoist

1. Disconnect the negative battery cable.
2. Support the engine with the engine hoist.
3. Remove the air cleaner housing (See Air Cleaner Housing Removal & Installation in Section 02 Engine).
4. Remove the air cleaner housing base tray.
5. Remove the engine left mount retaining bolts (2) and remove the engine left mount bracket bolts (1). (Tighten: Engine left mount bolts to 70 N·m)
6. Installation is in the reverse order of removal.

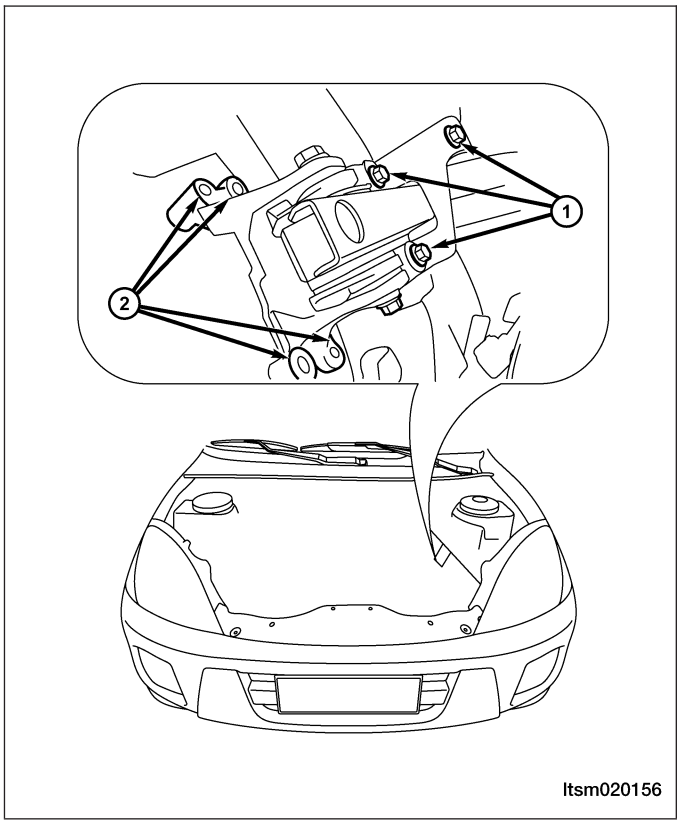

Downloaded from www.Manualslib.com manuals search engine

Removal & Installation - Right Mount

NOTE :
The following special tools are required to perform the repair procedure:
- Engine Hoist

1. Disconnect the negative battery cable.
2. Support the engine with the engine hoist.
3. Remove the engine right mount retaining bolts (2) and remove the engine right mount bracket bolts (1).
   (Tighten: Engine right mount bolts to 70 N·m)
4. Installation is in the reverse order of removal.

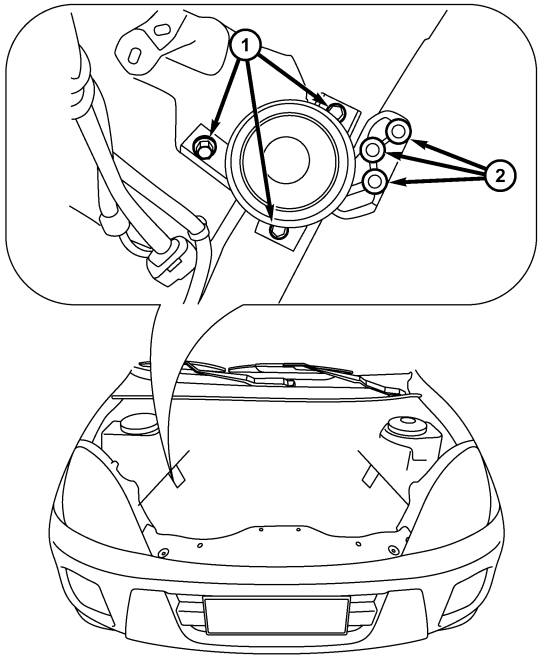

ltsm020155

Removal & Installation - Front Mount

NOTE :
The following special tools are required to perform the repair procedure:
- Engine Hoist

1. Disconnect the negative battery cable.
2. Support the engine with the engine hoist.
3. Remove the bolts (1) securing the front engine mount.
   (Tighten: Engine front mount bolts to 60 N·m)
4. Installation is in the reverse order of removal.

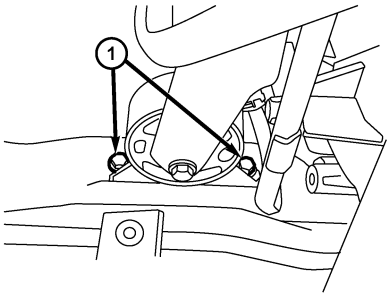

besm080035

Downloaded from www.Manualslib.com manuals search engine

Removal & Installation - Rear Mount

NOTE :
The following special tools are required to perform the repair procedure:
- Engine Hoist

1. Disconnect the negative battery cable.
2. Support the engine with the engine hoist.
3. Remove the engine rear mount retaining bolts (2) and remove the engine rear mount bracket bolts (1).
   (Tighten: Engine rear mount bolts to 60 N·m)
4. Installation is in the reverse order of removal.

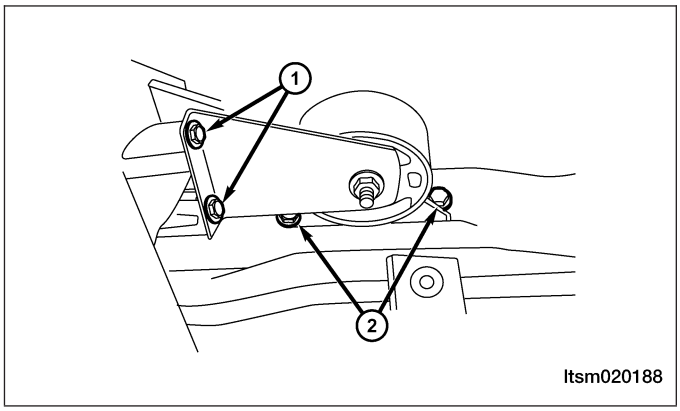

Engine Assembly

Removal & Installation

NOTE :
The following special tools are required to perform the repair procedure:
- CH-20001 - Right Engine Mount Bolt Remover
- Engine Hoist

NOTE :
The engine is removed with the transaxle as an assembly.

1. Remove the vehicle hood.
2. Remove the negative battery cable from the engine.
3. Remove the engine cover.
4. Remove the battery, battery hold downs, and battery tray (See Battery Removal & Installation in Section 05 Starting & Charging).
5. Discharge air conditioning system (See A/C System Evacuation and Recharge in Section 13 Heating & Air Conditioning).
6. Drain the cooling system (See Cooling System Draining and Filling in Section 06 Cooling).

WARNING!

Always allow the engine to cool before opening the cooling system. Do not loosen the coolant pressure relief cap when the engine is operating or the cooling system is hot. The cooling system is under pressure; steam and hot liquid can come out forcefully when the cap is loosened slightly. Failure to follow these instructions may result in serious personal injury.

Downloaded from www.Manualslib.com manuals search engine

7. Remove coolant reservoir (1).

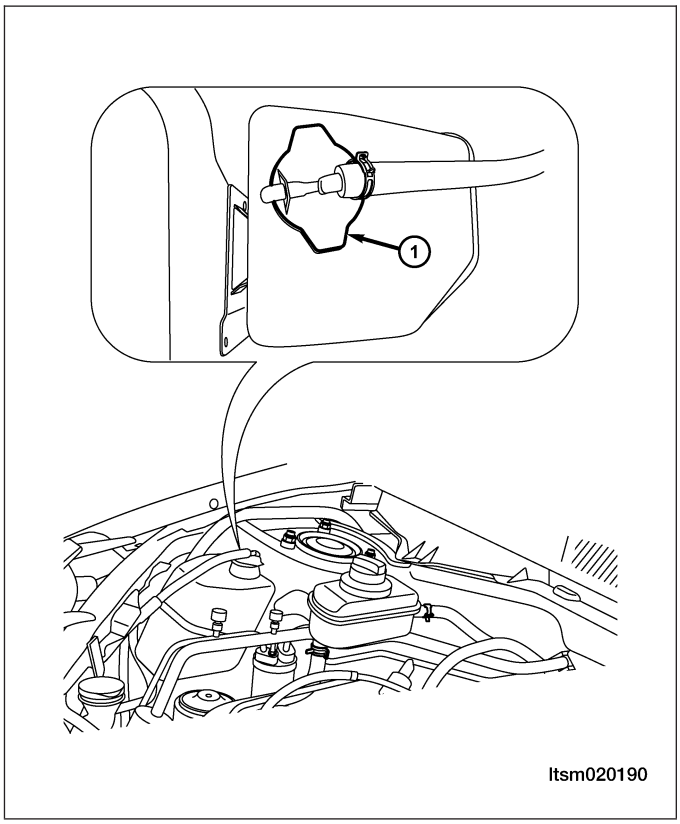

8. Remove the coolant fan & radiator assembly (See Coolant Fan & Radiator Assembly Removal & Installation in Section 06 Cooling).
9. Remove the starter motor wiring.
10. Relieve the fuel pressure (See Fuel Pressure Relief Procedure in Section 04 Fuel Delivery).
11. Disconnect and remove the fuel line at the fuel rail.
12. Remove the air inlet hose and the air cleaner case assembly.

    NOTE: For 1.8L engine, disconnect the air flow sensor electrical connector.

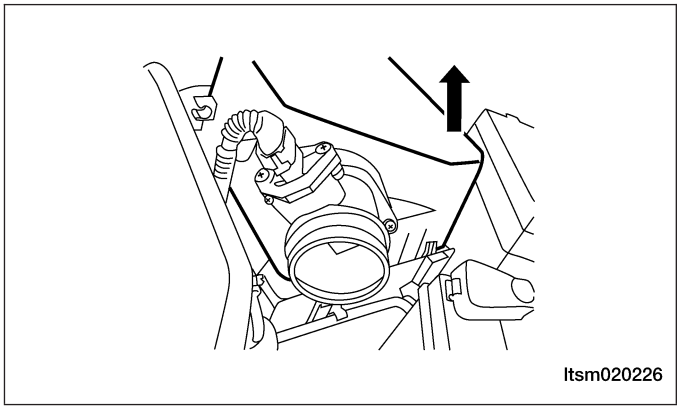

13. Remove the ground cable bolt from the cylinder head.

Downloaded from www.Manualslib.com manuals search engine

14. Disconnect and remove the following electrical connectors:
    - Coolant temperature sensor
    - Camshaft position sensor
    - Ignition coil
    - Four fuel injectors
    - Intake manifold air pressure sensor (1.6L)
    - Air flow sensor (1.8L)
    - Carbon canister solenoid valve
    - Throttle body control
    - A/C compressor
    - Oil pressure sensor
    - Power steering pump pressure switch
    - Generator
15. Remove the pipe from the canister control valve (1).

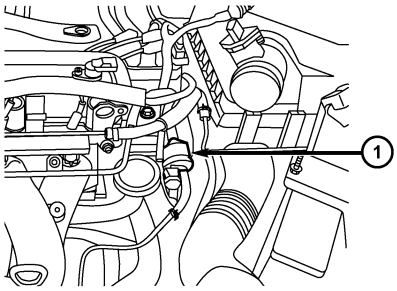

ltsm020235

16. Disconnect the heater hoses (1) on the vehicle.
17. Remove the vacuum line from the brake booster (2).
18. Remove the dipstick.

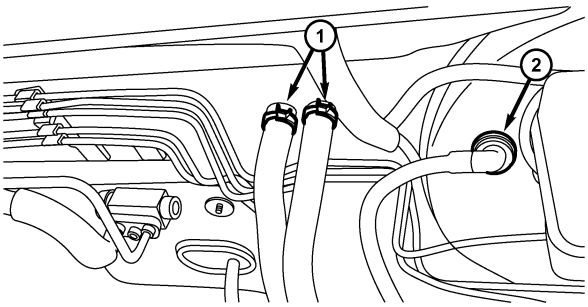

besm020025

19. If equipped with a manual transaxle remove the transaxle shift cable (1).

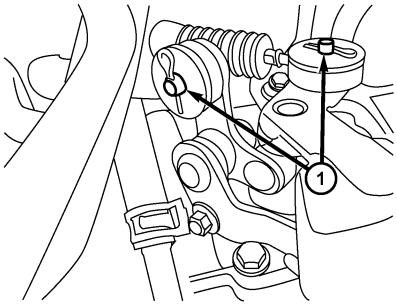

besm080051

Downloaded from www.Manualslib.com manuals search engine

20. If equipped with an automatic transaxle, remove the transaxle shift cable (1) and the transaxle shift cable clamp (2).
21. Remove the hydraulic pipe from the clutch slave cylinder.

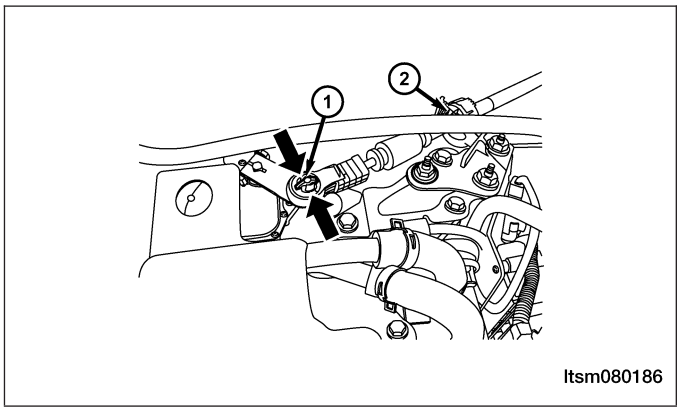

22. Remove the A/C compressor line bolt (1) from the A/C compressor.
(Tighten: A/C compressor line bolts to 20 N·m)
NOTE: After removing the A/C lines, plug the A/C lines to prevent any debris from entering the A/C system.

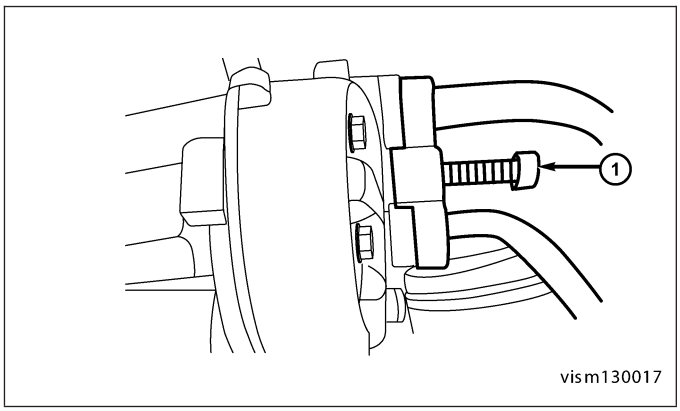

23. Remove the high pressure line (1) and low pressure line (2) from the power steering pump (drain fluid from lines).
(Tighten: High pressure line to power steering pump 40 ± 5 N·m)
(Tighten: Low pressure line to power steering pump 40 ± 5 N·m)

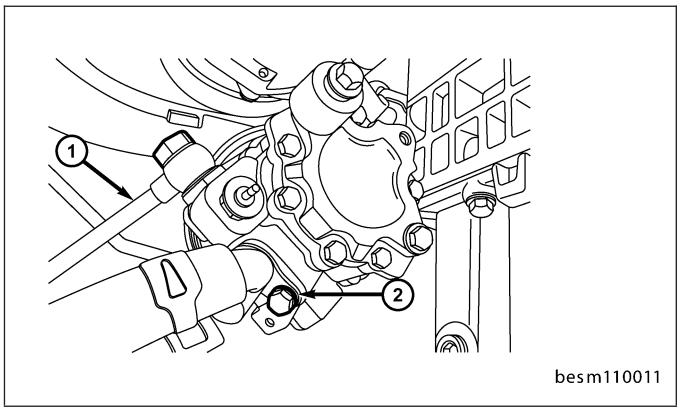

24. Remove the exhaust manifold heat shield bolts (1) and then remove heat shield.
(Tighten: Exhaust manifold heat shield bolts to 15 N·m)

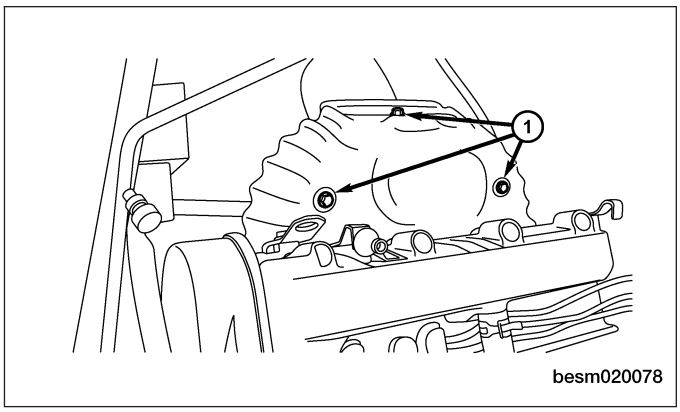

25. Disconnect the upstream and downstream oxygen sensor connectors.

Downloaded from www.Manualslib.com manuals search engine

26. Remove the catalytic converter to exhaust manifold bolts (1).

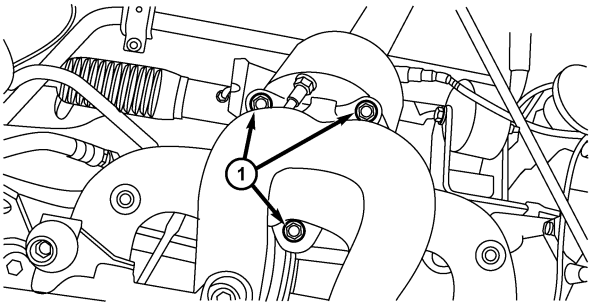

ltsm020201

27. Raise and support the vehicle.
28. Remove the front axle shaft (See Front Axle Shaft Removal & Installation in Section 09 Driveline & Axle).
29. Drain the engine oil.
30. Lower the vehicle and install engine lift chain hangers.
31. Remove the bolts (1) securing the front engine mount.
    (Tighten: Engine front mount bolt to 60 N·m)

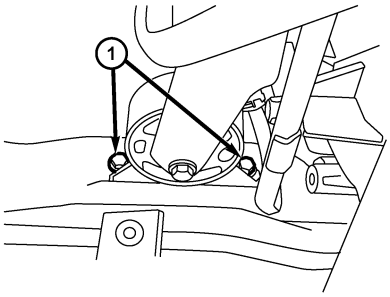

besm080035

32. Remove the bolts (1) securing the rear engine mount.
    (Tighten: Engine rear mount bolt to 60 N·m)

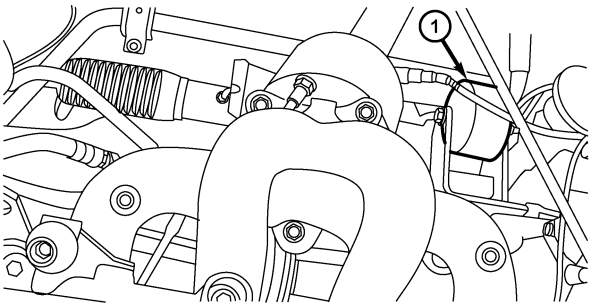

ltsm020207

Downloaded from www.Manualslib.com manuals search engine

33. Remove the left transaxle mount bolts (2) and the transaxle mount bracket retaining bolts (1).
(Tighten: Left transaxle mount bolt to 70 N·m)

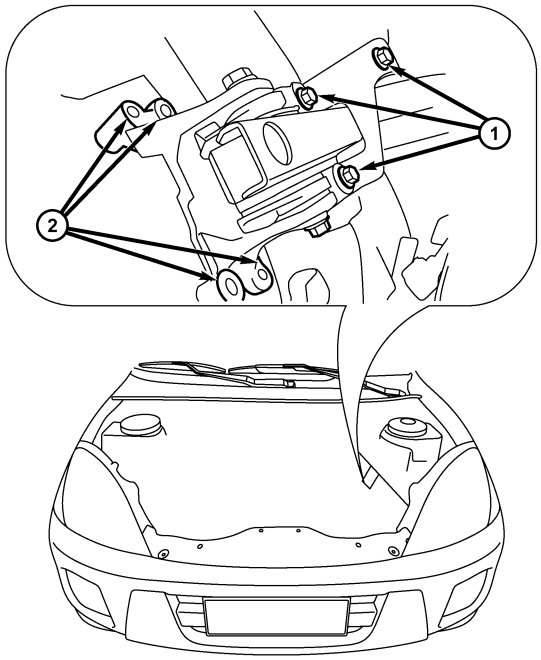

ltsm020156

34. Using special tool CH-20001 (2), remove the three bolts (1) securing the right engine mount.
(Tighten: Engine right mount bolt to 70 N·m)

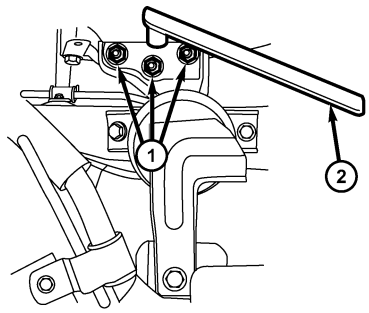

ltsm020218

35. Verify all components between the engine and vehicle are disconnected.
36. Remove the front sub-frame (See Front Sub-Frame Removal & Installation in Section 10 Suspension).
37. Hoist the engine from vehicle.

CAUTION:
Verify all electrical connectors are disconnected prior to engine/transaxle removal.

38. Separate the engine and transaxle.

Downloaded from www.Manualslib.com manuals search engine

39. Remove the accessory drive belt (1) (See Accessory Drive Belt Removal & Installation in Section 02 Engine).

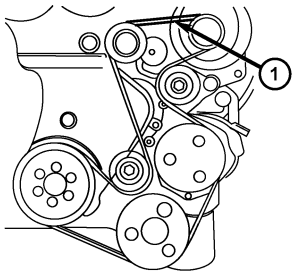

ltsm020200

40. Remove the generator (1) from the bracket (See Generator Removal & Installation in Section 05 Starting & Charging).
41. Remove the A/C compressor pipe.
42. Remove the A/C compressor (2) (See A/C Compressor Removal & Installation in Section 13 Heating & Air Conditioning).

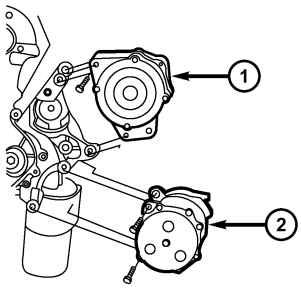

besm020029

43. Remove the power steering pump (1) with the piping connected and set the pump aside. Secure the pump with wire.

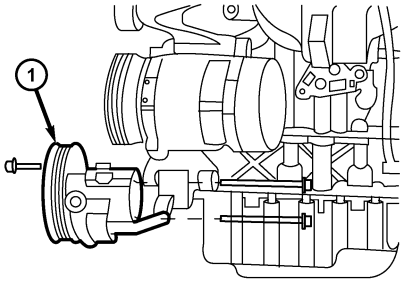

besm020028

44. Installation is in the reverse order of removal.

Downloaded from www.Manualslib.com manuals search engine

Engine Timing Belt

Removal & Installation

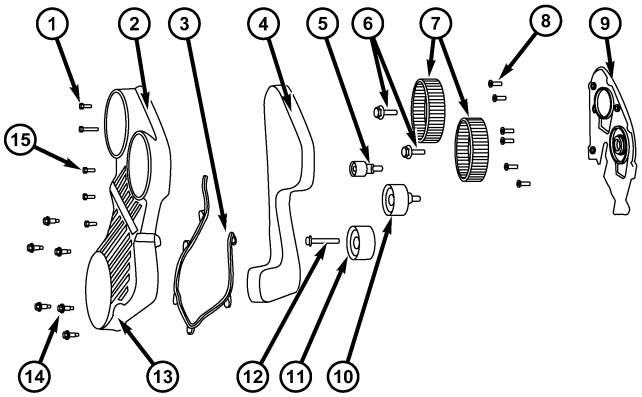

ltsm020162

1 - Timing Belt Upper Cover Bolt	9 - Rear Timing Cover
2 - Timing Belt Upper Cover	10 - Idler Pulley
3 - Timing Belt Cover Gasket	11 - Tensioner Pulley
4 - Timing Belt	12 - Tensioner Pulley Bolt
5 - Timing Belt Touch Pulley	13 - Timing Belt Lower Cover
6 - Camshaft Bolt	14 - Timing Belt Lower Cover Bolt
7 - Camshaft	15 - Timing Belt Upper Cover Bolt
8 - Rear Timing Cover Bolt	

NOTE :
The following special tools are required to perform the repair procedure:
- CH-20001 - Right Engine Mount Bolt Remover
- CH-20003 - Crankshaft Holder
- CH-20010 - Camshaft Holder
- Engine Hoist

1. Release the coolant system pressure.

WARNING!

Always allow the engine to cool before opening the cooling system. Do not loosen the coolant pressure relief cap when the engine is operating or the cooling system is hot. The cooling system is under pressure; steam and hot liquid can come out forcefully when the cap is loosened slightly. Failure to follow these instructions may result in serious personal injury.

Downloaded from www.Manualslib.com manuals search engine

2. Remove the coolant reservoir (1) and set aside.

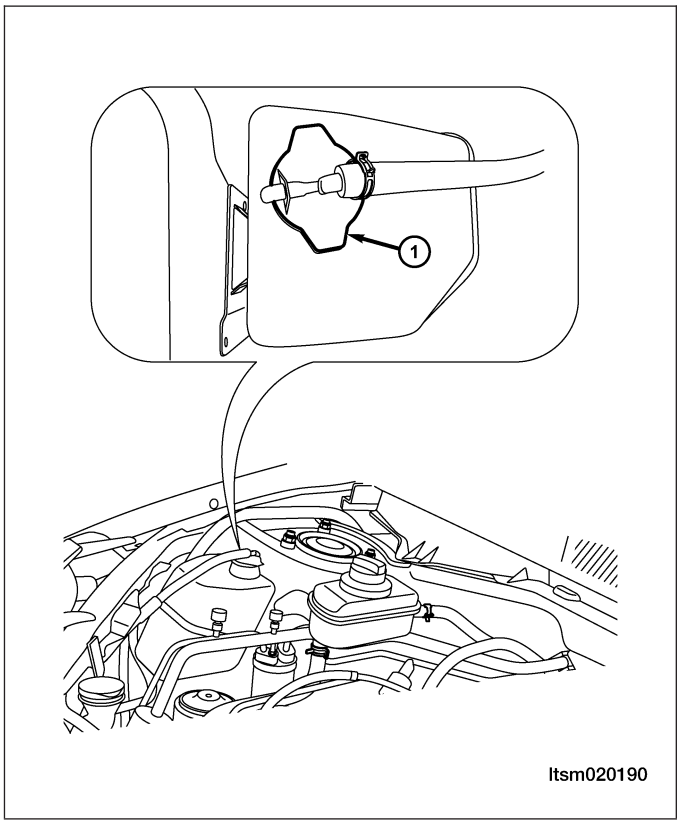

3. Attach an engine hoist and support the engine using an engine hoist.
4. Using special tool CH-20001 (2), remove the engine right mount bolts (1) and bracket.
   (Tighten: Engine right mount bolts to 70 N·m)

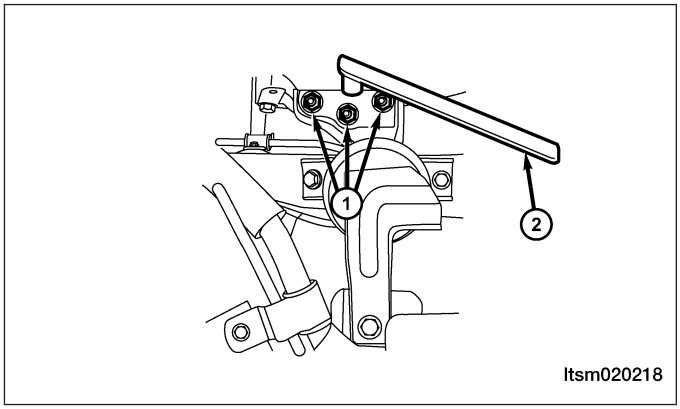

5. Remove the accessory drive belt (See Accessory Drive Belt Removal & Installation in Section 02 Engine).
6. Remove the crankshaft vibration damper bolts (1).
   (Tighten: Crankshaft vibration damper bolts to 25 N·m)

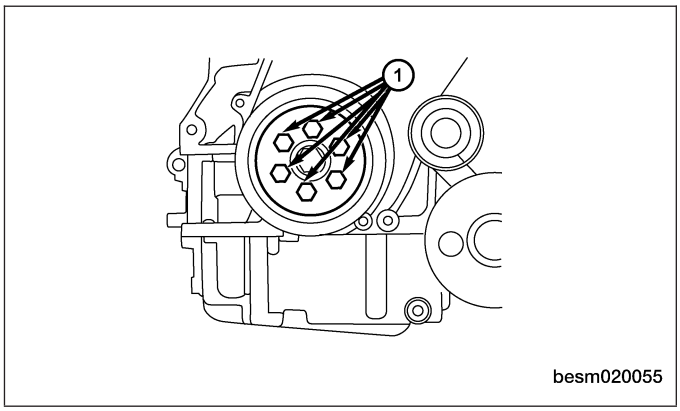

Downloaded from www.Manualslib.com manuals search engine

7. Remove the timing belt upper cover (1) and timing belt lower cover (2).
   (Tighten: Timing belt upper cover bolts to 11 N·m)
   (Tighten: Timing belt lower cover bolts to 11 N·m)

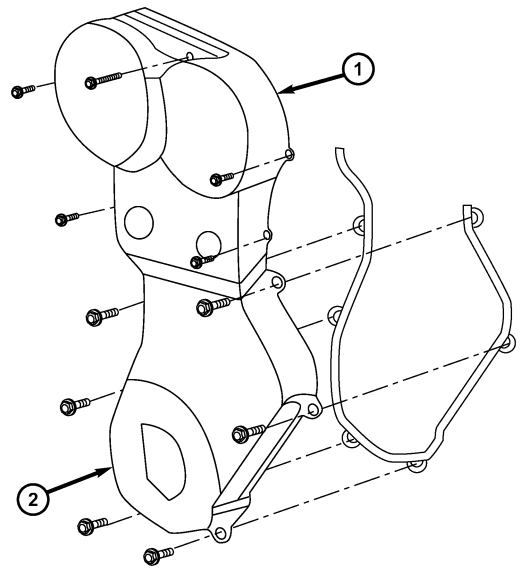

besm020020

8. Remove the cylinder head cover (See Cylinder Head Cover Removal & Installation in Section 02 Engine).
9. Remove the plug in the cylinder block.
10. Using special tool CH-20003 (1), install the crankshaft holder into the cylinder block and rotate the crankshaft until the crankshaft tool completely holds the crankshaft in place.
    (Tighten: Crankshaft holder to 28 N·m)

    NOTE: The crankshaft holder will prevent the crankshaft from rotating in either direction.

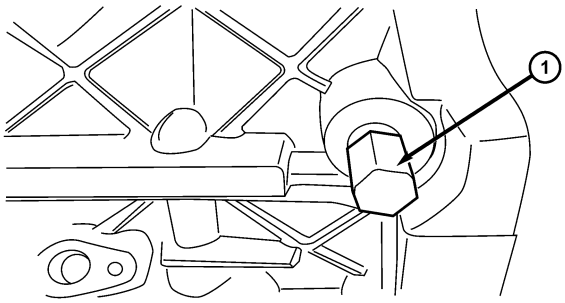

ltsm020234

11. Using special tool CH-20010 (1), install the camshaft holder to hold the camshafts in place.

    NOTE: The camshaft holder will prevent the camshafts from rotating in either direction.

CAUTION: Rotating the camshafts or crankshaft with timing components loosened or removed can cause seriou damage to the valves or pistons.

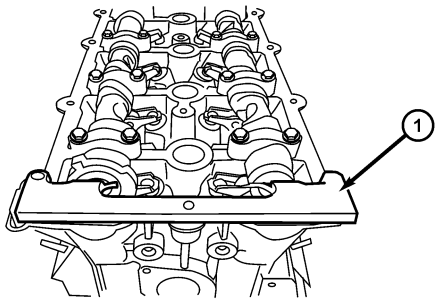

besm020016

Downloaded from www.Manualslib.com manuals search engine

12. Loosen the bolt of the timing belt tensioner pulley (1), remove the pulley.
    (Tighten: Timing belt tensioner pulley bolt to 30 N·m)
13. Remove the timing belt (3).
14. Installation is in the reverse order of removal.

Installation Notes:

- Install the timing belt and rotate the tensioner pulley with an Allen wrench in order to apply tension to the belt and align the finger pointer of the tensioner to the middle of the U-slot opening. Tighten the tensioner pulley bolt (1) to 30 N·m, then tighten the intake and exhaust camshaft pulley bolts (2, 4) to 120 N·m.

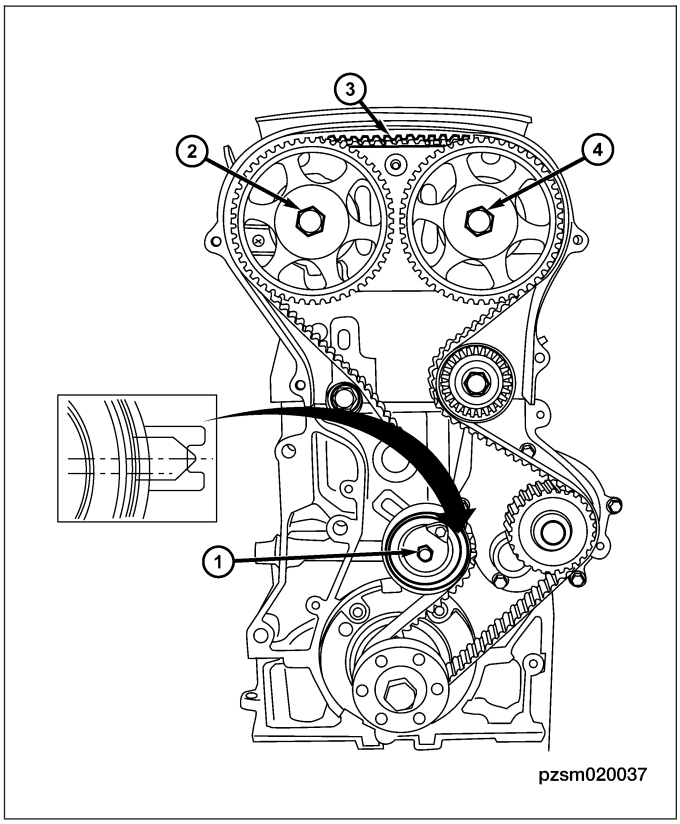

Exhaust Manifold

Removal & Installation

1. Remove the engine cover.
2. Remove the bolts (1) attaching the exhaust manifold heat shield.
   (Tighten: Exhaust manifold heat shield bolts to 15 N·m)
3. Remove the exhaust manifold heat shield.

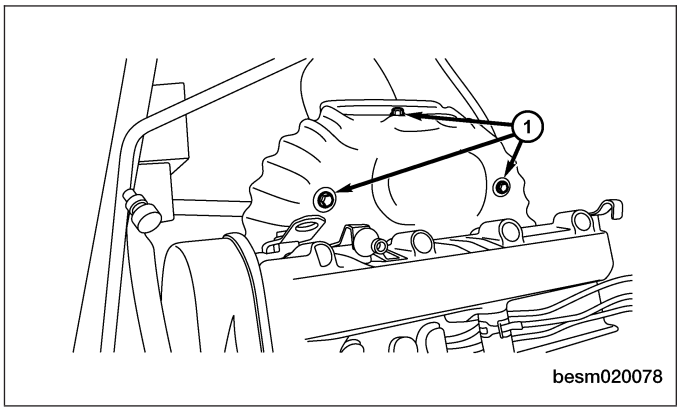

Downloaded from www.Manualslib.com manuals search engine

4. Remove the three bolts (1) securing the exhaust manifold to the catalytic converter assembly.
5. Disconnect the catalytic converter assembly from the manifold.

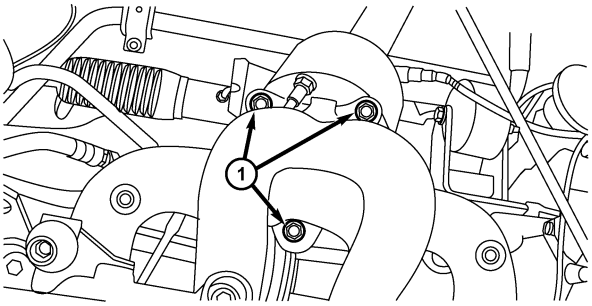

ltsm020201

6. Remove the exhaust manifold nuts (1).
(Tighten: Exhaust manifold nuts to 25 N·m)

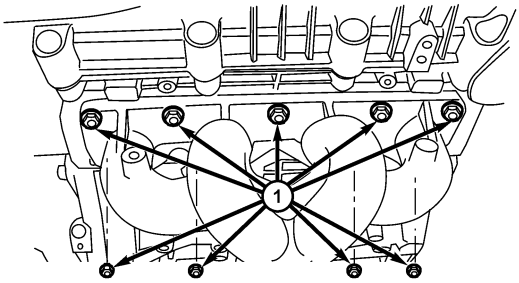

besm020033

7. Remove and discard manifold gasket (1).

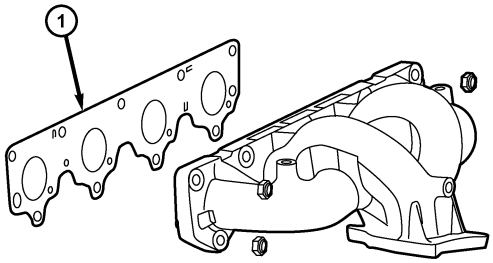

ltsm020169

8. Installation is in the reverse order of removal.

Downloaded from www.Manualslib.com manuals search engine

Installation Notes:

- Clean all surfaces of manifold and cylinder head.
- Install a new exhaust manifold gasket during installation.

Intake Manifold

Removal & Installation

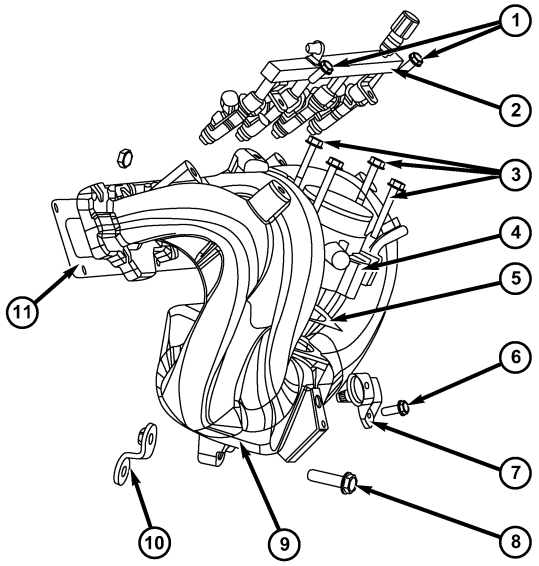

ltsm020164

1 - Fuel Rail Bolt	7 - Air Intake Pressure Temperature Sensor
2 - Fuel Rail	8 - Intake Manifold Bolt
3 - Electronic Throttle Control Actuator Bolt	9 - Intake Manifold
4 - Electronic Throttle Control Actuator	10 - Intake Manifold Bracket
5 - Electronic Throttle Control Actuator Gasket	11 - Intake Manifold Gasket
6 - Air Intake Pressure Temperature Sensor Bolt	

1. Disconnect the negative battery cable.
2. Remove the engine cover.
3. Drain the cooling system (See Cooling System Draining and Filling in Section 06 Cooling).

WARNING!

Always allow the engine to cool before opening the cooling system. Do not loosen the coolant pressure relief cap when the engine is operating or the cooling system is hot. The cooling system is under pressure; steam and hot liquid can come out forcefully when the cap is loosened slightly. Failure to follow these instructions may result in serious personal injury.

4. Remove the coolant fan & radiator assembly (See Coolant Fan & Radiator Assembly Removal & Installation in Section 06 Cooling).

Downloaded from www.Manualslib.com manuals search engine

5. Disconnect the four fuel injector electrical connectors (1).
6. Disconnect the throttle body control electrical connector (2).

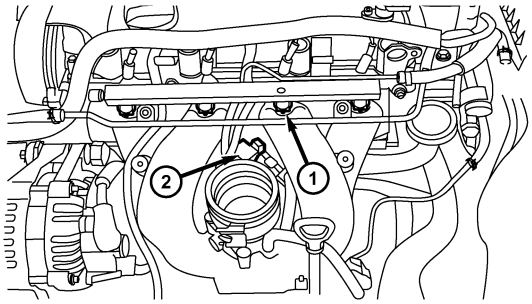

ltsm020221

7. Disconnect the air flow sensor electrical connector (1) (1.8L engine).

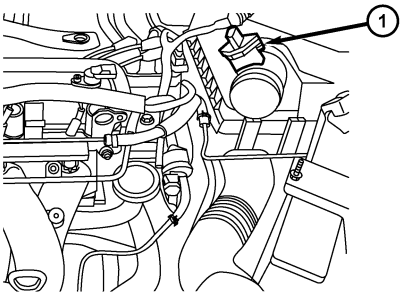

ltsm020204

8. Disconnect the air pressure sensor electrical connector (1) (1.6L engine).
9. Remove MAP sensor (2) from intake manifold.

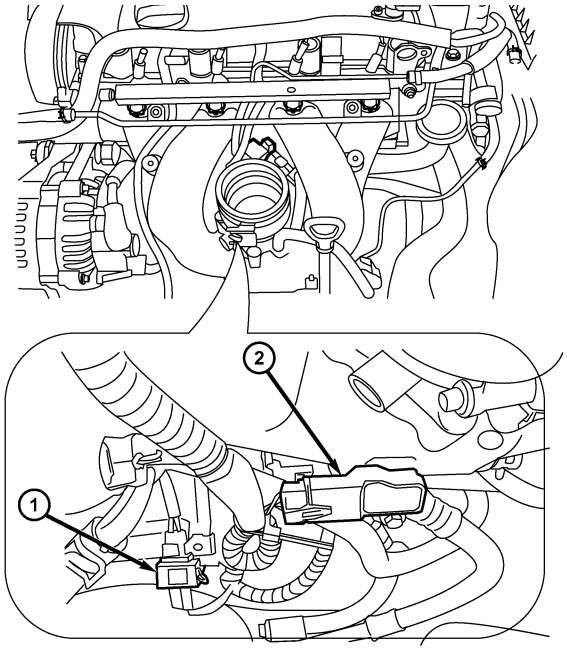

ltsm020227

10. Loosen the clamp between the air intake hose and the air cleaner.
11. Loosen the clamp between the air intake hose and the throttle body and then remove the intake pipe.
12. Loosen the clamp on the PCV hose and then disconnect the PCV hose.

Downloaded from www.Manualslib.com manuals search engine

13. Remove the fuel rail bracket bolts (1).
    (Tighten: Fuel rail bracket bolts to 11 N·m)

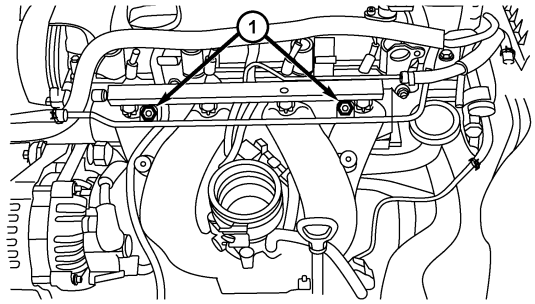

ltsm020222

14. Remove the fuel rail with the fuel injectors and set aside.
15. Remove the screws securing the vacuum valve bracket to the intake manifold.
16. Set aside the vacuum valve and pipe.
17. Disconnect intake manifold electrical harness, and vacuum hose.
18. Remove the bolts (2) & (3) securing the engine oil dipstick to intake manifold. Remove the dipstick.
    (Tighten: Dipstick bracket bolts to 11 N·m)
19. Disconnect the oil pressure switch connect (4).
20. Remove the nuts (1) securing the intake manifold to cylinder head.
    (Tighten: Intake manifold nuts to 11 N·m)

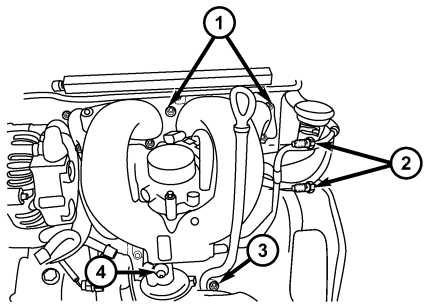

ltsm020223

21. Installation is in the reverse order of removal.

Installation Notes:

- Clean all surfaces of manifold and cylinder head.
- Install a new intake manifold gasket during installation.
- Install new O-rings on the fuel injectors.

Idler Pulley

Removal & Installation

1. While using a suitable tool and securely holding the hexagonal portion of the drive belt tensioner, rotate the pulley counterclockwise to loosen the drive belt.

WARNING!
Avoid placing hands near the drive belt tensioner while it is being held.

Downloaded from www.Manualslib.com manuals search engine

2. Remove the drive belt.

Upper Accessory Drive Belt Idler Pulley (1)

- Remove the bolt and the upper accessory drive belt idler pulley.

(Tighten: Upper idler pulley bolt to 45 N·m)

Lower Accessory Drive Belt Idler Pulley (2)

- Remove the bolt and the lower accessory drive belt idler pulley.

(Tighten: Lower idler pulley bolt to 45 N·m)

3. Installation is in the reverse order of removal.

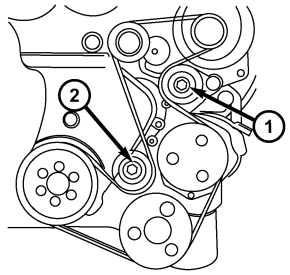

ltsm020203

Oil Filter

Removal & Installation

NOTE :
The following special tools are required to perform the repair procedure:
- CH-10003 - Oil Filter Remover

WARNING!

Prolonged and repeated contact with engine oil will harm your skin. If engine oil is spilled on your skin, wash it off immediately with water. In addition, used engine oil contains potentially harmful contaminants which may cause skin cancer. Always use adequate skin protection when performing vehicle service.

CAUTION:
When servicing the oil filter, install the special tool against the base of the filter to avoid deforming the filter.

1. Using special tool CH-10003 oil filter remover, remove the oil filter (1).
   (Tighten: Oil filter to 25 N·m)
   CAUTION: When removing the oil filter, ensure that the oil filter gasket is not stuck to the engine. The oil filter gasket must be removed from the engine before installing the new oil filter.

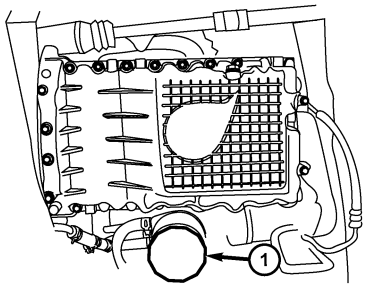

ltsm020206

2. Installation is in the reverse order of removal.

Installation Notes:

- Clean the surface, and verify the oil filter does not leak.

Downloaded from www.Manualslib.com manuals search engine

Oil Pan

Removal & Installation

1. Remove the oil dipstick.
2. Raise and support the vehicle.
3. Remove the oil pan drain plug and drain the engine oil.
   (Tighten: Oil pan drain plug to 40 N·m)

NOTE :
Do not pry on cylinder block to remove oil pan.

4. Remove oil pan bolts (1).
   (Tighten: Oil pan bolts to 18 N·m)

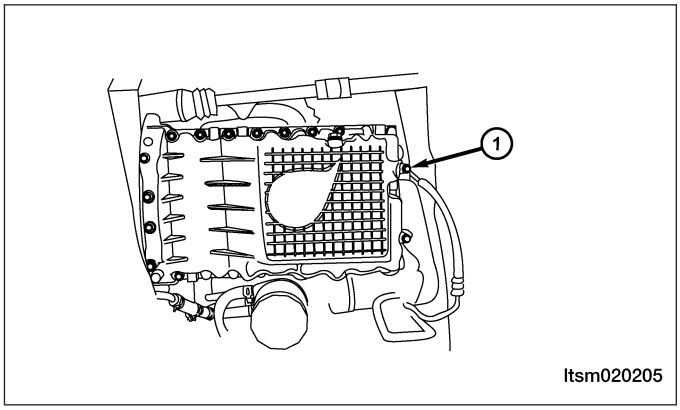

5. Using a putty knife, loosen seal around oil pan.
6. Remove the oil pan.
7. Installation is in the reverse order of removal.

Installation Notes:

- Oil pan sealing surfaces must be free of grease or oil.
- Install the four oil pan corner bolts in the sequence shown (1-2-3-4).
- Install the remaining oil pan bolts.
- Torque all the oil pan bolts to the proper specification.

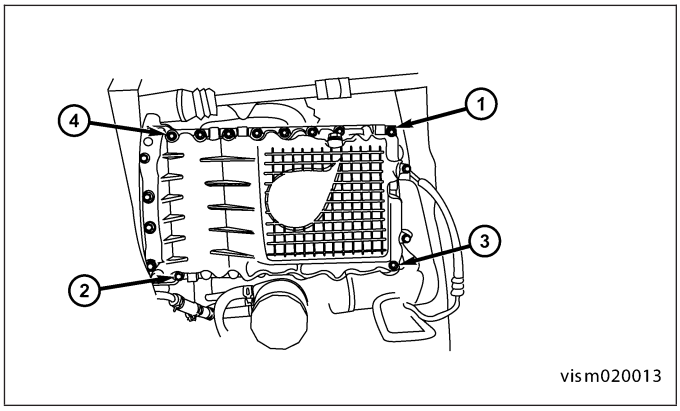

Downloaded from www.Manualslib.com manuals search engine

Oil Pump

Removal & Installation

1. Remove the accessory drive belt (See Accessory Drive Belt Removal & Installation in Section 02 Engine).
2. Remove the crankshaft vibration damper retaining bolts (1).
   (Tighten: Crankshaft vibration damper bolts to 25 N·m)

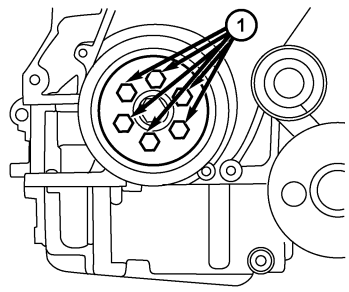

besm020055

3. Remove the engine timing belt (See Engine Timing Belt Removal & Installation in Section 02 Engine).
4. Remove the crankshaft timing belt pulley bolt (2) from the crankshaft.
   (Tighten: Crankshaft timing belt pulley bolt to 130 N·m and an additional 65°)
5. Remove the key-way from the crankshaft.
6. Using an appropriate tool, remove the front crankshaft oil seal (1).

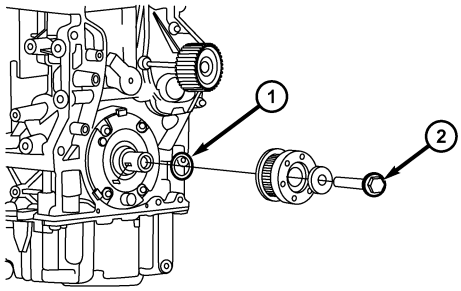

ltsm020199

7. Remove the four oil pump bolts (1).
   (Tighten: Oil pump bolts to 11 N·m)
8. Remove the oil pump (2) using a suitable tool.
9. Remove the oil pump gasket (3).

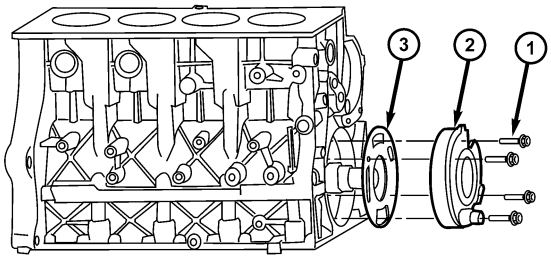

besm020032

10. Installation is in the reverse order of removal.

Installation Notes:

- Before installing, prime the new oil pump. Fill the oil pump with engine oil and rotate the oil pump.
- Replace the oil pump gasket.

Downloaded from www.Manualslib.com manuals search engine

Oil Strainer

Removal & Installation

1. Raise and support the vehicle.
2. Remove the oil pan (See Oil Pan Removal & Installation in Section 02 Engine).
3. Remove the oil strainer retaining bolts (1).
   (Tighten: Oil strainer bolts to 18 N·m)

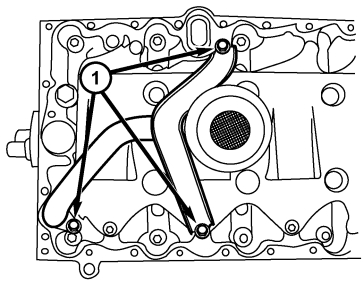

besm020018

4. Carefully remove the oil strainer.
5. Installation is in the reverse order of removal.

Installation Notes:

- Install new O-rings on the oil strainer pipe.

Downloaded from www.Manualslib.com manuals search engine

ENGINE UNIT REPAIR

Engine Block

Specifications

Torque Specifications

DESCRIPTION	TORQUE (N·m)
Connecting Rod Cap Bolts	1st Step: Tighten the bolt to 25 N·m 2nd Step: Tighten the bolt an additional 90°
Main Bearing Cap Bolts	1st Step: Tighten the bolt to 45 N·m 2nd Step: Tighten the bolt an additional 180°
Lower Cylinder Block Bolts	23

Clearance Specifications

DESCRIPTION	SPECIFICATION (mm)
Surface Distortion Limit	0.15
Inner Diameter Standard	81
Out-Of-Round	< 0.008
Taper	< 0.01

Disassembly

1. Remove the oil pan and then remove oil baffle.
2. Remove the oil strainer.

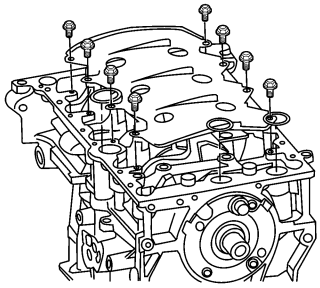

besm020060

3. For each connecting rod/piston assembly to be removed, rotate the crankshaft to the bottom dead center position for each cylinder.

NOTE :
Before removing the connecting rod/piston assembly, check the connecting rod side clearance.

Downloaded from www.Manualslib.com manuals search engine

4. Remove the connecting rod retaining bolts.

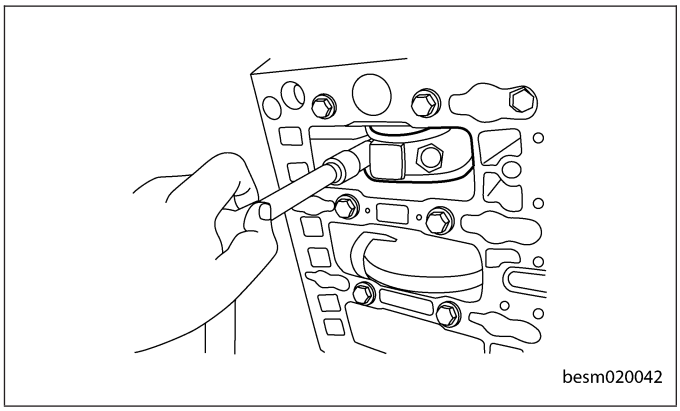
besm020042

5. Remove the connecting rod bearing cap.

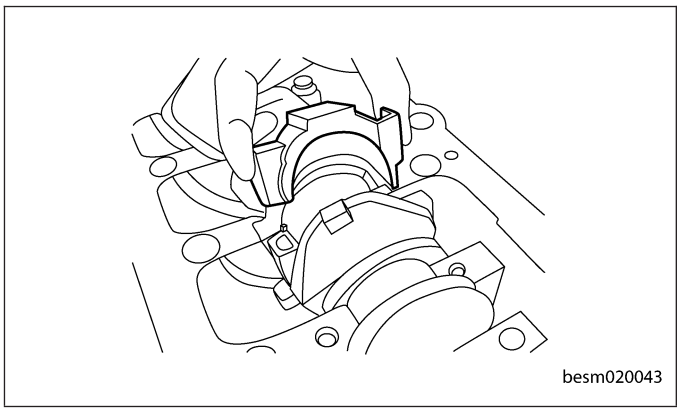
besm020043

6. Using a hammer handle or similar tool, push the connecting rod/piston assembly (1) out through the top of the cylinder block.

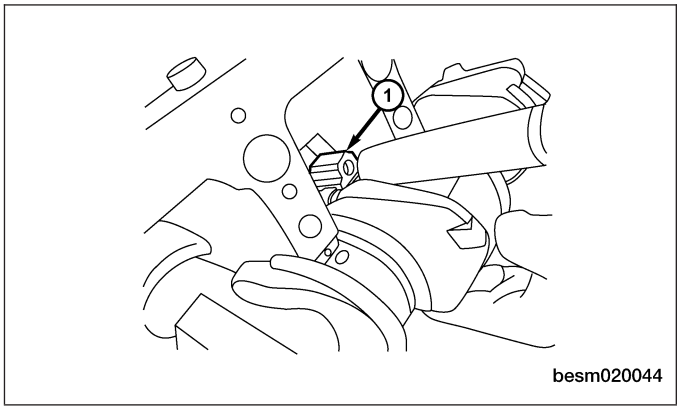

besm020044

7. Remove the connecting rod bearings (See Connecting Rod Removal & Installation in Section 02 Engine).

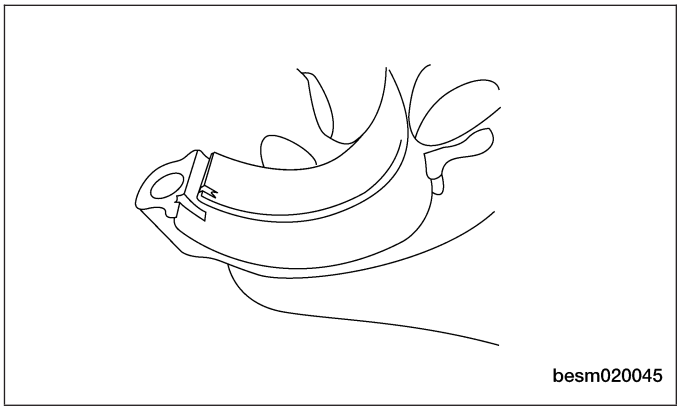
besm020045

CAUTION: When removing the connecting rod side bearings, note the installation position. Keep them in the correct order.

Downloaded from www.Manualslib.com manuals search engine

8. Installation is in the reverse order of removal.

Inspection

NOTE :
All measurements should be taken with the engine block at room temperature, 21°C.

Engine Block

- Clean cylinder block thoroughly and check all core hole plugs for evidence of leaking.
- Examine block and cylinder bores for cracks or fractures.
- Check block deck surfaces for flatness. Deck surface must be within service limit of 0.050 mm.

Cylinder Bore

- The cylinder walls should be checked for out-of-round and taper with cylinder indicator or equivalent. If the cylinder walls are badly scuffed or scored, the cylinder block should be replaced, and new pistons and rings fitted.
- Measure the cylinder bore at three levels in directions X and Y. Top measurement should be 10 mm down and bottom measurement should be 10 mm up from bottom of bore.

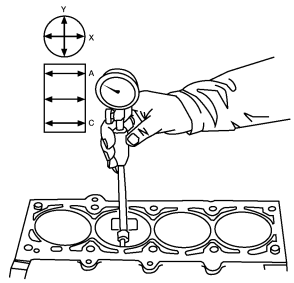

besm020063

CYLINDER BORE	
All Cylinders	81.000 - 81.010 mm

Assembly

NOTE :
Cleanliness is extremely important during the engine assembly procedure. Any foreign material, including any material created while cleaning gasket surfaces, that enters the oil passages, coolant passages or the oil pan can cause engine failure.

NOTE :
Assemble all components in their original position.

1. Install the pistons to the connecting rods.
2. Using a piston ring expander, install the piston rings.
3. Assemble all components in the reverse order of disassembly.

Downloaded from www.Manualslib.com manuals search engine

Pistons

Specifications

Clearance Specifications - Pistons

DESCRIPTION	SPECIFICATION (mm)
Surface Distortion Limit	0.15
Inner Diameter Standard	81
Out-Of-Round	< 0.008
Taper	< 0.01

Clearance Specifications - Piston Ring Groove

DESCRIPTION	SPECIFICATION (mm)
First Ring	0.04 - 0.08
Second Ring	0.01 - 0.0251

Clearance Specifications - Piston Ring End Gap

DESCRIPTION	SPECIFICATION	LIMIT
First Ring End Gap	0.2 - 0.4 mm	0.8 mm
Second Ring End Gap	0.4 - 0.6 mm	1.0 mm

Clearance Specifications - Piston to Piston Pin

DESCRIPTION	SPECIFICATION (mm)
Piston To Piston Pin	0.002 - 0.013

Downloaded from www.Manualslib.com manuals search engine

Disassembly

- Piston Ring Removal
  - Using a suitable ring expander, remove upper and intermediate piston rings.
  - Remove the upper oil ring side rail, lower oil ring side rail and then oil ring expander from piston.
  - Clean ring grooves of any carbon deposits.

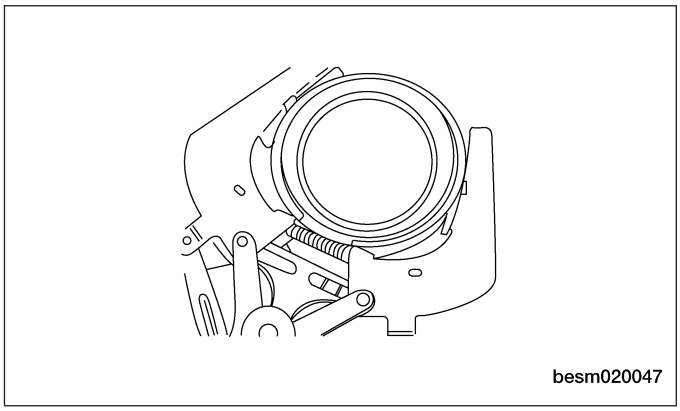
besm020047

CAUTION:
Before removing the piston rings (1), check the piston ring side clearance. Be careful to mark the location of the piston rings if they are to be reused.

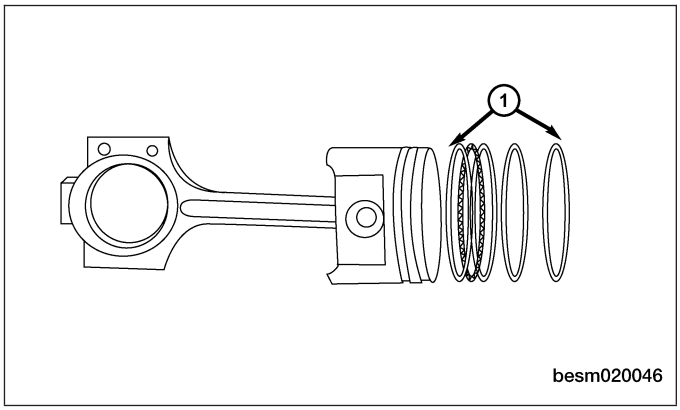

besm020046

- Piston Pin Snap Ring Removal
  - Using snap ring pliers, remove the snap ring (1).
  - Heat the pistons if necessary.

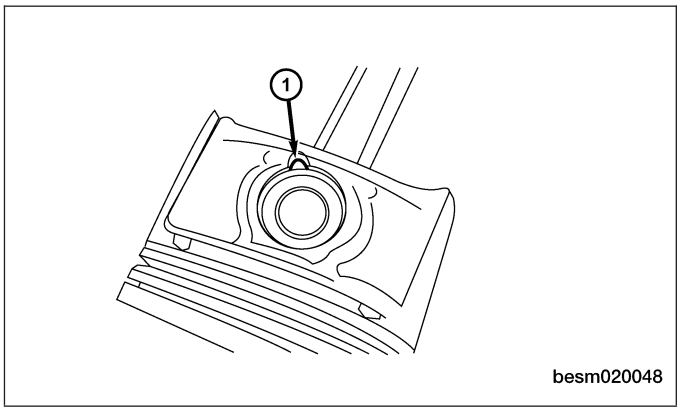

besm020048

Downloaded from www.Manualslib.com manuals search engine

- Piston Pin Removal
  - Push out the piston pin with a suitable tool.

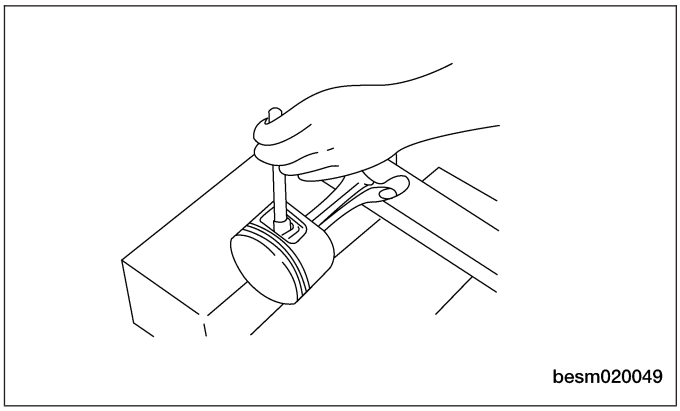

- Connecting Rod & Piston Disassembly
  - Remove the piston from the connecting rod.

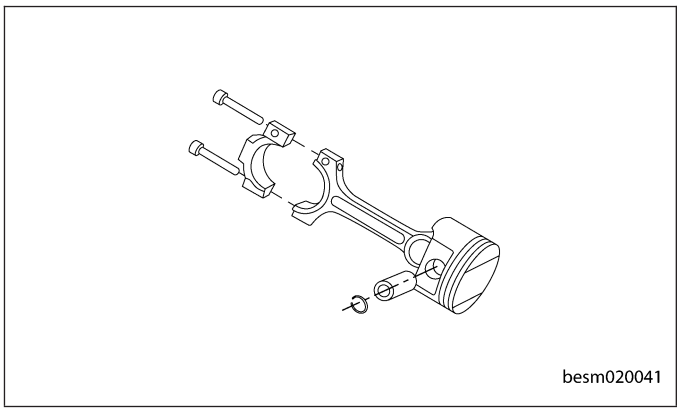

Inspection

Check the piston diameter.

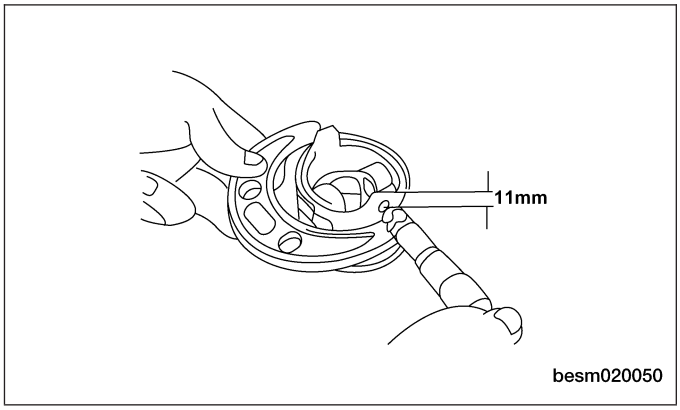

PISTON DIAMETER	
All Pistons	80.946 - 80.964 mm

Downloaded from www.Manualslib.com manuals search engine

Check the inner diameter of each cylinder bore (See Cylinder Bore Inspection in Section 02 Engine).

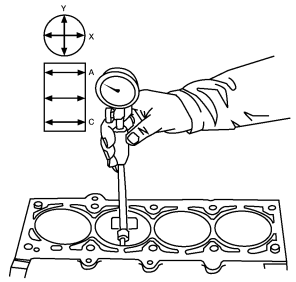

besm020063

CYLINDER BORE	
All Cylinders	81.000 - 81.010 mm

Check piston ring to groove side clearance.
- Clean the ring slot using a suitable tool.
- Measure piston ring to groove side clearance.

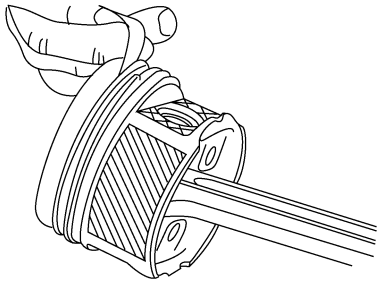

besm020051

RING GROOVE CLEARANCE	
First Ring	0.04 - 0.08 mm
Second Ring	0.01 - 0.0251 mm

- Wipe the cylinder bore clean. Insert ring and push down with piston to ensure it is square in the bore. The ring gap measurement must be made with the ring positioned at least 13 mm from bottom of cylinder bore and below the bottom of the oil ring travel where the cylinder bore has minimal wear. Check gap with feeler gauge.

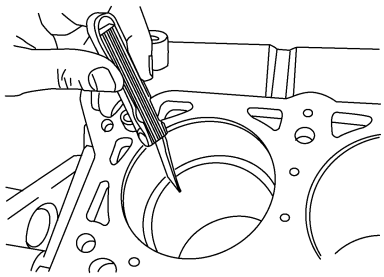

besm020052

Downloaded from www.Manualslib.com manuals search engine

RING END GAP CLEARANCE		
First Ring	0.2 - 0.4 mm	0.8 mm
Second Ring	0.4 - 0.6 mm	1.0 mm

- Check the diameter of the piston pin bore.
- Check the outer diameter of the piston pin.

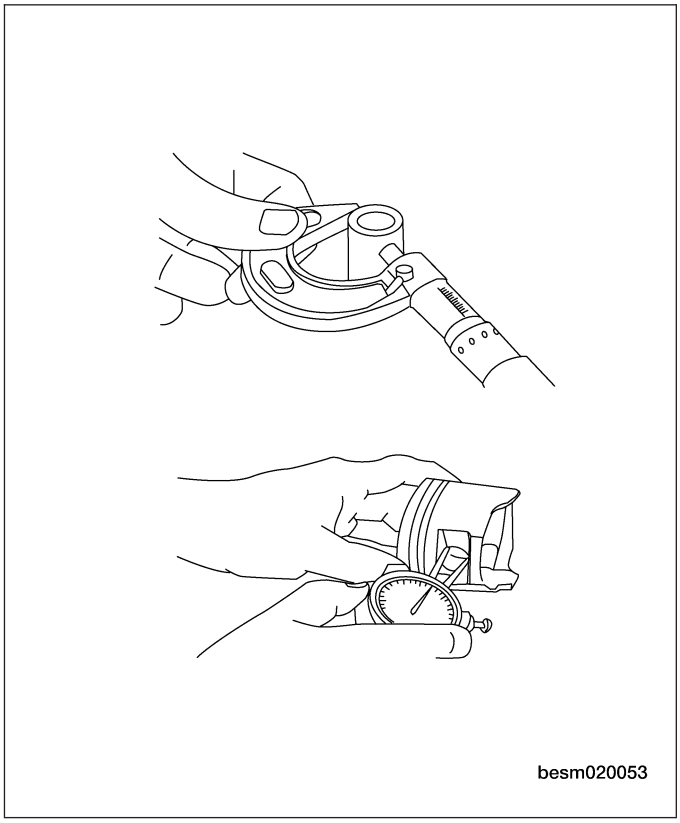

- Check the inner diameter of connecting rod (small end).

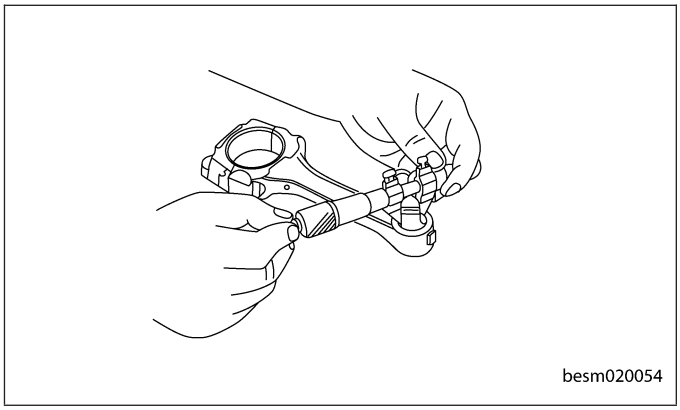

PISTON PIN CLEARANCE	
Piston and Piston Pin	0.002 - 0.013 mm

Assembly

1. Install the piston to the connecting rod. Assemble the components in their original positions.
2. Using a piston ring expander, install the piston rings. Assemble the components in their original positions.
3. Assemble all components in the reverse order of disassembly.

Downloaded from www.Manualslib.com manuals search engine

Connecting Rods

Specifications

Torque Specifications

DESCRIPTION	TORQUE (N·m)
Connecting Rod Bolts	1st Step: Tighten bolts to 25 N·m 2nd Step: Tighten the connecting rod bolts an additional 90°

Clearance Specifications

DESCRIPTION	SPECIFICATION (mm)
Connecting Rod Radial Clearance	0.016 - 0.051
Connecting Rod Axial Clearance	0.002 - 0.013

Disassembly

1. Remove the connecting rod cap bolts.
2. Remove the connecting rod bearing cap.

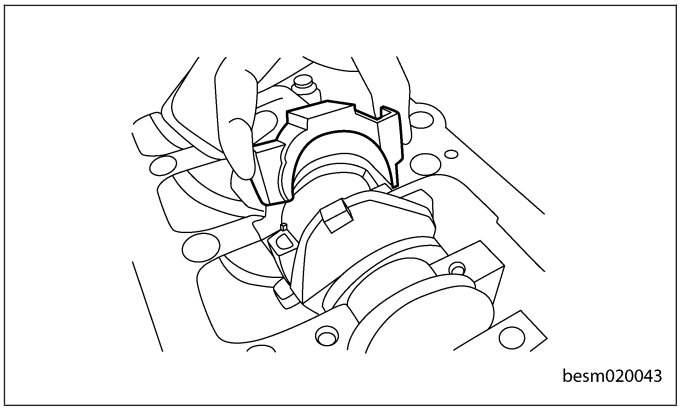
besm020043

3. Using a hammer handle or similar tool, push the piston and connecting rod assembly (1) out through the cylinder head side of the engine block.

   NOTE: Before removing the piston and connecting rod assembly, check the connecting rod side clearance.

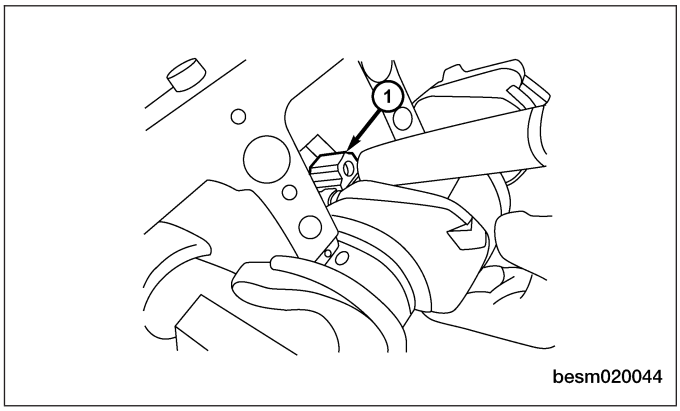

besm020044

Downloaded from www.Manualslib.com manuals search engine

4. Remove the connecting rod bearings.
   CAUTION: When removing the connecting rod side bearings, note the installation position. Keep them in the correct order.

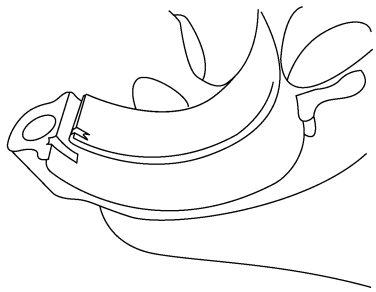

besm020045

Inspection

- Check the radial clearance of connecting rod bearing.

CONNECTING ROD RADIAL CLEARANCE	
Radial Clearance	0.016 - 0.051 mm

Assembly

NOTE :
The rod bolts should not be reused.

1. Before installing the NEW rod bolts, the threads and under the bolt head should be oiled with clean engine oil.
2. Install each bolt finger tight, then alternately tighten each bolt to assemble the cap properly.
3. Tighten the connecting rod bolts using the two step torque-turn method:
   - 1st Step: Tighten bolts to 25 N·m
   - 2nd Step: Tighten the connecting rod bolts an additional 90°

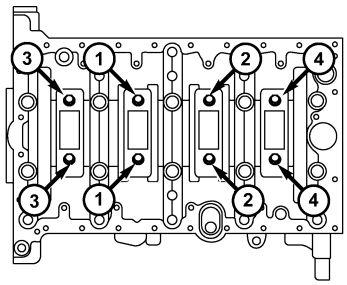

ltsm020208

4. Using a feeler gauge check connecting rod side clearance.
   - Check axial clearance of connecting rod.

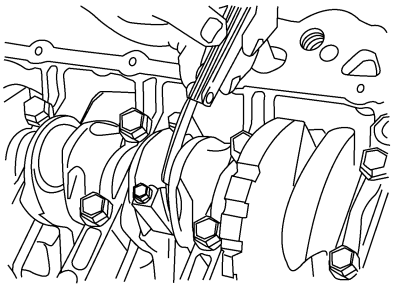

besm020064

Downloaded from www.Manualslib.com manuals search engine

Crankshaft

Specifications

Torque Specifications

DESCRIPTION	TORQUE (N·m)
Main Bearing Cap Bolts	1st Step: Tighten the bolt to 45 N·m 2nd Step: Tighten the bolt an additional 180°
Lower Cylinder Block Bolts	23

Clearance Specifications

DESCRIPTION	SPECIFICATION (mm)
Diameter of Crankshaft Main Journals	53.981 - 54
Diameter of Crankshaft Rod Journals	47.884 - 47.9
Out-of-Round Maximum of Crankshaft Main Journals	0.008
Axial Clearance of Crankshaft	0.07 - 0.265
Radial Clearance of Crankshaft	0.0035 - 0.034
Coaxality Crankshaft Main Journal	0.05
Thrust Washer Thickness	2.4 - 2.405

Disassembly

1. Remove the front crankshaft oil seal (See Front Crankshaft Oil Seal Removal & Installation in Section 02 Engine).
2. Remove the rear crankshaft oil seal (See Rear Crankshaft Oil Seal Removal & Installation in Section 02 Engine).
3. Remove the pistons with connecting rod assemblies.
4. Remove the lower cylinder block bolts in the sequence shown.

   NOTE: Before loosening the lower cylinder block bolts, measure the crankshaft side clearance.

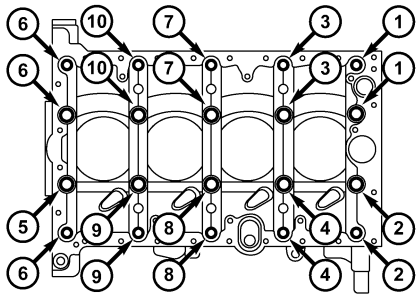

besm020074

5. Remove the lower cylinder block.
6. Remove the crankshaft.
7. Remove the main bearings and thrust bearings from the cylinder block and lower cylinder block.

   NOTE: If reusing the bearings, identify and number the bearings so that they are assembled in the same position and direction.

Downloaded from www.Manualslib.com manuals search engine

Inspection

- The crankshaft main journals should be checked for excessive wear, roundness and scoring. Limits of roundness on any crankshaft main journals should be held to 0.008 mm. Limits of roundness on any crankshaft rod journals should be held to 0.005 mm. DO NOT nick crank pin or bearing fillets. Limits of out of round on any crankshaft journals should be held to 0.005 mm.

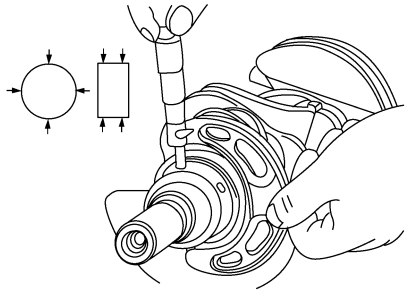

besm020075

- Check the axial clearance after installation. Standard of axial clearance should be 0.07 mm. Limits of axial clearance should be held to 0.265 mm.

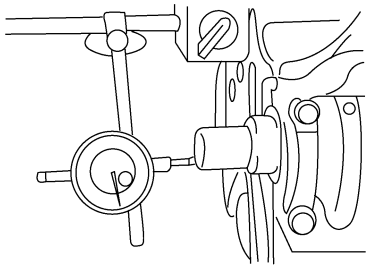

besm020076

- Clean the journal and bearing.
- Install the crankshaft.
- Cut the plastic-gauge to the same width as the bearing, and then put it onto the crankshaft journal to make it parallel with the central line of the crankshaft.
- Install the main bearing cap carefully, and tighten the bolts to the specified torque.
- Remove the main bearing cap.
- Measure the oil clearance with the plastic-gauge.
  - Standard oil clearance of crankshaft rod and main journals should be 0.022 mm
  - Limits of oil clearance of crankshaft rod and main journals should be 0.058 mm

Standard oil clearance of crankshaft main journal should be 0.022 mm. Limits of oil clearance of crankshaft main journal should be 0.058 mm.

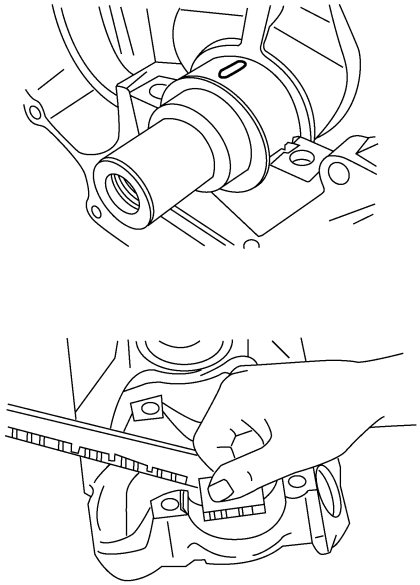

besm020077

Downloaded from www.Manualslib.com manuals search engine

Assembly

1. Install the main bearings and thrust bearings to the upper cylinder block and lower cylinder block.
   NOTE: Identify and number the bearings, if reusing them, so that they are assembled in the same position and direction.
2. Assemble the crankshaft and main bearings in the reverse order of disassembly.

Downloaded from www.Manualslib.com manuals search engine

CYLINDER HEAD UNIT REPAIR

Cylinder Head

Specifications

Torque Specifications

DESCRIPTION	TORQUE (N·m)
Cylinder Head Bolts	1st Step: Tighten the bolt to 40 ± 5 N·m 2nd Step: Tighten the bolt an additional 90 ± 5° 3rd Step: Tighten the bolt an additional 90 ± 5°
Cylinder Head Cover Bolts	11

Clearance Specifications

DESCRIPTION	SPECIFICATION (mm)
Cylinder Head Flatness	0.04
Intake Valve Deflection	0.02
Exhaust Valve Deflection	0.04
Spring Height	47.7

Disassembly

NOTE :
The following special tools are required to perform the repair procedure:
- CH-20011 - Valve Seal Installer
- CH-20012 - Valve Stem Seal Installer Guide
- CH-20013 - Valve Seal Remover
- CH-20017 - Valve Keeper Installer
- CH-20018 - Valve Spring Compressor

NOTE :
Replacement cylinder head comes complete with valves, seals, springs, retainers, keepers, tappets, and camshafts.

1. Remove camshafts.
2. Remove the hydraulic tappet assembly (1).

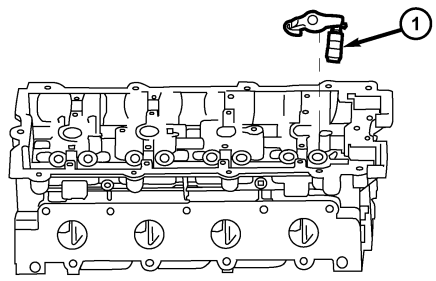

besm020071

Downloaded from www.Manualslib.com manuals search engine

3. Using the special tool CH-20018 (1), compress the valve spring.

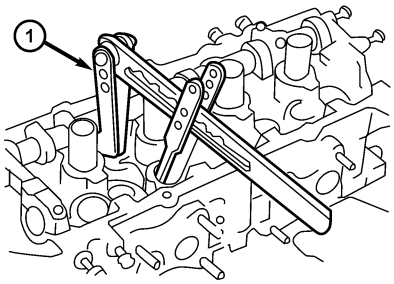

besm020067

4. Remove the valve keeper (1), valve spring retainer (2) and valve spring (3).
5. Push the valve stem from the cylinder head and remove the valve (4).

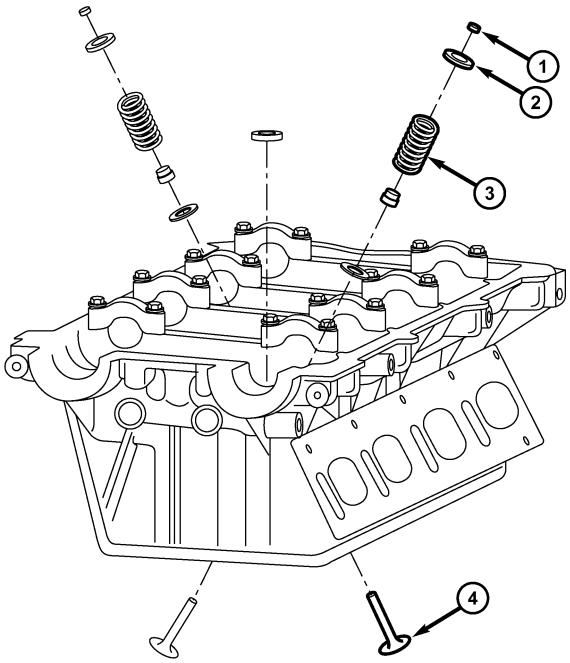

vism080041

6. Using special tool CH-20013 (1), remove the valve oil seal.

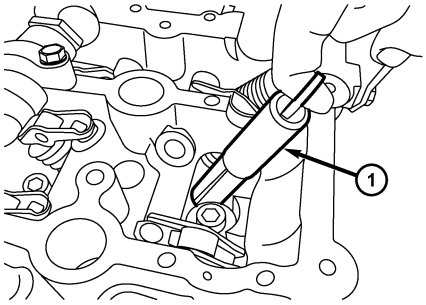

ltsm020225

7. Remove the valve guide.
8. Remove the spark plugs.

Downloaded from www.Manualslib.com manuals search engine

Inspection

- Cylinder head must be flat within 0.04 mm.
- Inspect camshaft bearing journals for scoring.
- Remove carbon and varnish deposits from inside of valve guides with a valve guide cleaner.
- Verify the valve tappets move freely in their bores, and that they have been rotating.
- Check the valve guide height.

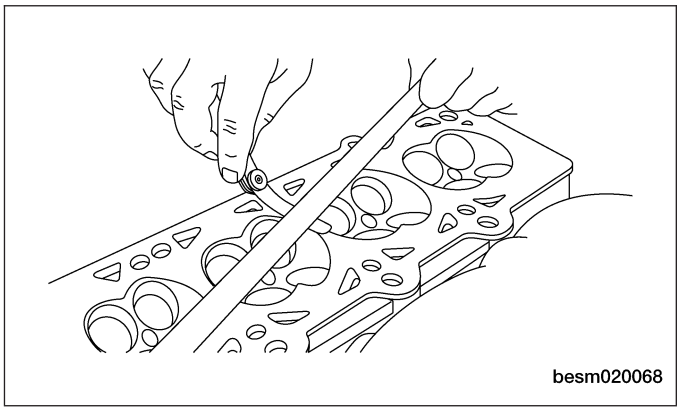
besm020068

Assembly

1. Install new valve guide if necessary.
2. Install new valve seat if necessary.
3. Using special tool CH-20011 (1) and CH-20012 (2), install the new valve oil seal.

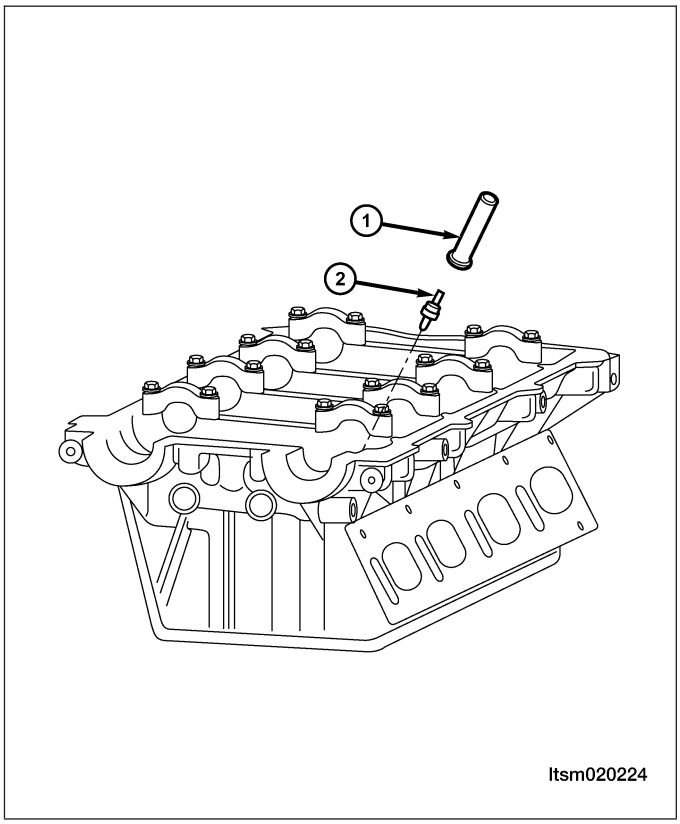

ltsm020224

4. Install the valves into the cylinder head (larger diameter on intake side).
5. Install the valve springs.
6. Install the valve spring retainers.

Downloaded from www.Manualslib.com manuals search engine

7. Using valve spring compressor CH-20018 (1), compress the valve springs.
8. Install the valve keepers.

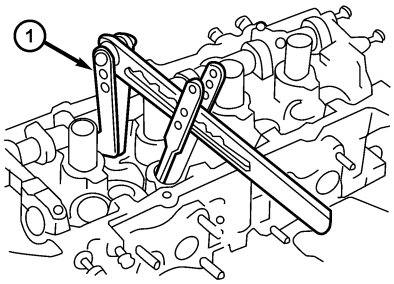

besm020067

9. Strike the valve stem lightly with a plastic hammer after installation to verify proper assembly.
10. Install valve tappets in the head.
11. Install the camshafts.

Installation Notes:

- Coat the valve oil seal with engine oil.

Camshaft

Specifications

Camshaft Specifications

DESCRIPTION	SPECIFICATION (mm)
Intake Cam Lobe Height	37.15
Exhaust Cam Lobe Height	37.05
Journal #1 Outer Diameter	31.934 - 31.95
Journal #2, #3, #4, #5, Outer Diameter	23.947 - 23.96
Cam Bearing #1 Inner Diameter	32 - 32.025
Cam Bearing #2, #3, #4, #5, Inner Diameter	24 - 24.021
Journal #1 Clearance	0.05 - 0.091
Journal #2, #3, #4, #5 Clearance	0.04 - 0.074
Intake Camshaft Axial Clearance	0.15 - 0.20
Exhaust Camshaft Axial Clearance	0.15 - 0.20

Downloaded from www.Manualslib.com manuals search engine

Disassembly

1. Remove the camshaft bearing cap bolts.
   NOTE: Equally loosen camshaft bearing cap bolts in several steps.

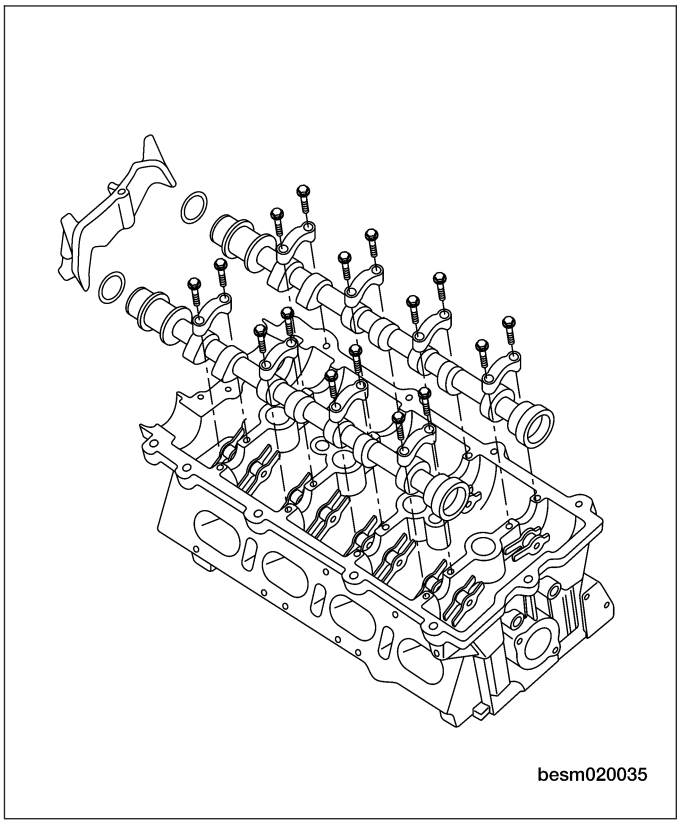
besm020035

2. Remove the camshaft bearing caps and place them in proper order.
   NOTE: The camshaft bearing caps are marked for identification.
3. Remove the camshafts and then remove the camshaft seals.

Inspection

- Measure the camshaft cam lobe height.
- If wear is beyond the limit, replace the camshaft.

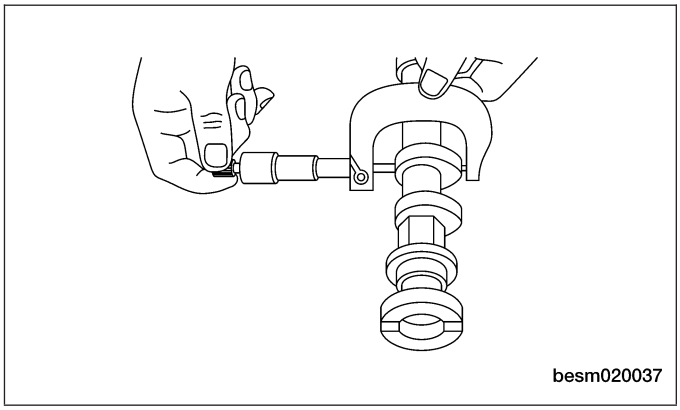
besm020037

CAMSHAFT CAM LOBE HEIGHT	
Intake Cam Lobe Height	37.15 mm
Exhaust Cam Lobe Height	37.05 mm

Downloaded from www.Manualslib.com manuals search engine

- Measure the outer diameter of the camshaft journal.

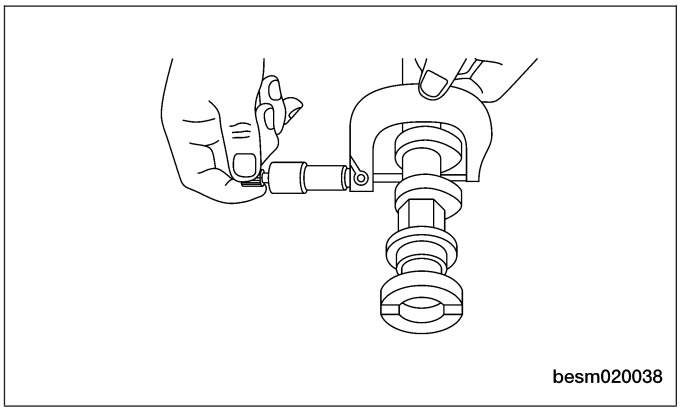
besm020038

OUTER DIAMETER OF CAMSHAFT JOURNAL	
Journal #1 Outer Diameter	31.934 - 31.95 mm
Journal #2, #3, #4, #5, Outer Diameter	23.947 - 23.96 mm

- Measure the inner diameter of the camshaft bearing.

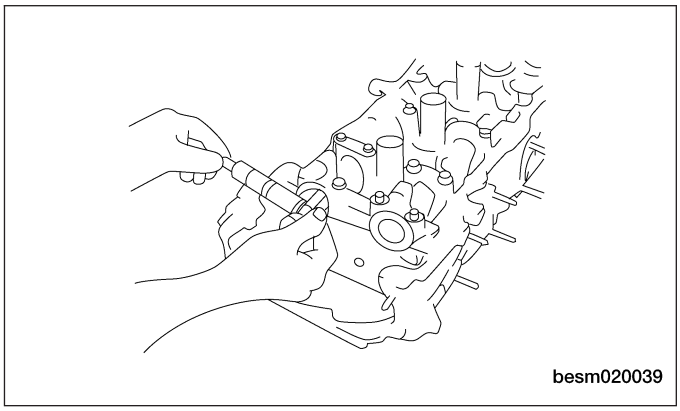
besm020039

INNER DIAMETER OF CAMSHAFT BEARING	
Cam Bearing #1 Inner Diameter	32 - 32.025 mm
Cam Bearing #2, #3, #4, #5, Inner Diameter	24 - 24.021 mm

- Calculation of camshaft journal clearance

Journal clearance = (inner diameter of camshaft bearing) - (outer diameter of camshaft journal)

CAMSHAFT JOURNAL CLEARANCE	
Journal #1 Clearance	0.05 - 0.091 mm
Journal #2, #3, #4, #5 Clearance	0.04 - 0.074 mm

Downloaded from www.Manualslib.com manuals search engine

- Measure the axial clearance of camshaft.

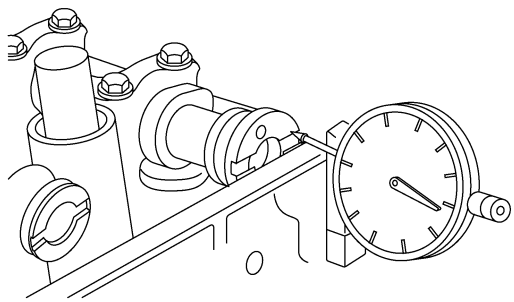

besm020070

CAMSHAFT AXIAL CLEARANCE	
Intake Camshaft	0.15 - 0.20 mm
Exhaust Camshaft	0.15 - 0.20 mm

Assembly

1. Using special tool CH-20010 (1), install the camshaft holder to hold the camshafts in place.

NOTE :
The camshaft holder will prevent the camshafts from rotating in either direction.

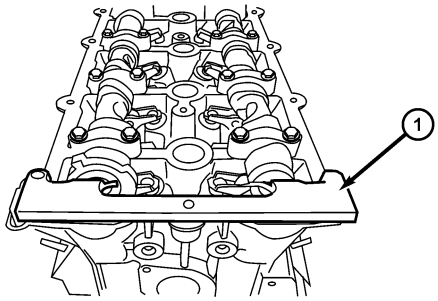

besm020016

2. Installation is in the reverse order of removal.

Installation Notes:

- Install the intake and exhaust camshaft bearing caps in the proper order.
- Slowly tighten bolts to the specified torque.
- Follow the torque sequence as shown.

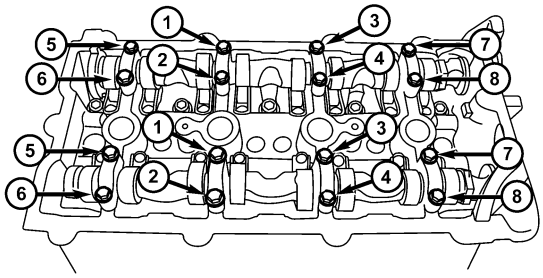

besm020036

Downloaded from www.Manualslib.com manuals search engine

Valve & Valve Guides

Specifications

Valve & Valve Guide Specifications

DESCRIPTION	SPECIFICATION (mm)
Intake Valve Deflection	0.02
Exhaust Valve Deflection	0.04
Intake Valve Guide Clearance	0.012 - 0.043
Exhaust Valve Guide Clearance	0.032 - 0.063

Disassembly

NOTE :
The following special tools are required to perform the repair procedure:
- CH-20011 - Valve Seal Installer
- CH-20012 - Valve Stem Seal Installer Guide
- CH-20013 - Valve Seal Remover
- CH-20017 - Valve Keeper Installer
- CH-20018 - Valve Spring Compressor

1. Using the special tool CH-20018 (1), compress the valve springs.

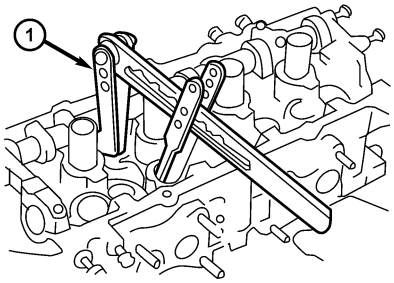

besm020067

Downloaded from www.Manualslib.com manuals search engine

2. Remove the valve keeper (1), valve spring retainer (2) and valve spring (3).
3. Remove valves (4) from the cylinder head.

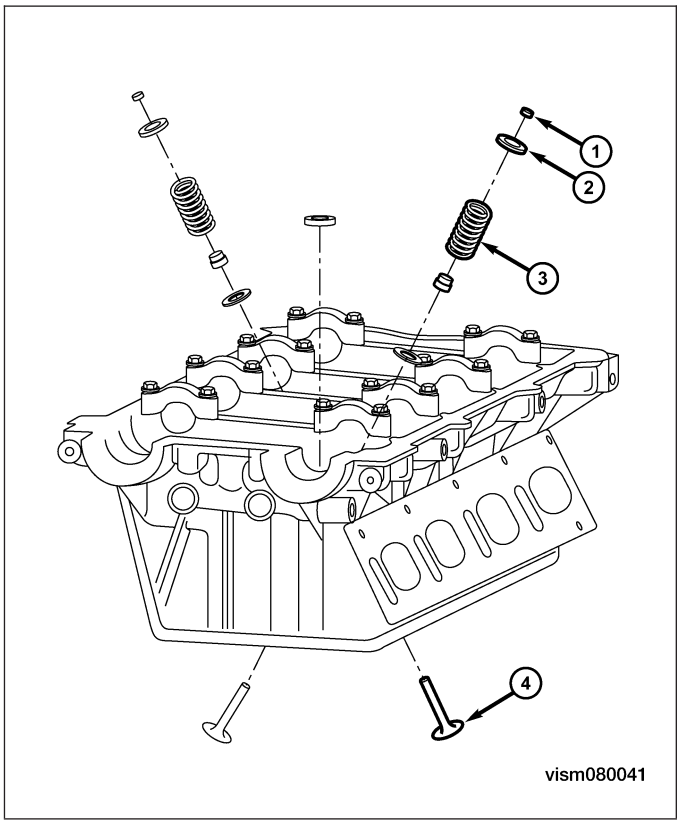

Inspection

Inspect the valves for the following:

- Clean all valves thoroughly and discard burned, warped and cracked valves.
- Check valve seats and valve faces for damage.
- When reconditioning valves follow the specifications outlined for both intake and exhaust valves.

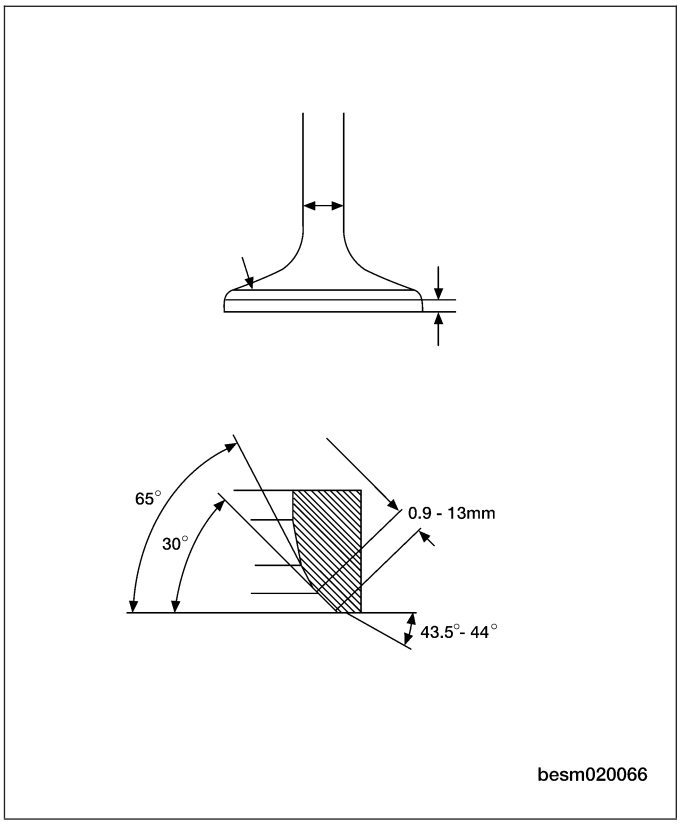

Downloaded from www.Manualslib.com manuals search engine

ITEM		SPECIFICATION (mm)
Valve Outer Diameter	Intake Valve	5.98 ± 0.008
	Exhaust Valve	5.96 ± 0.008
Valve Guide Inner Diameter	Intake Valve	5.4 ± 0.1
	Exhaust Valve	5.4 ± 0.1
Fringe Thickness On Top Of Valve	Intake Valve	0.3 ± 0.15
	Exhaust Valve	0.3 ± 0.15
Valve Tilt Angle	Intake Valve	65°
	Exhaust Valve	68°
Valve Height	Intake Valve	107.998
	Exhaust Valve	106.318

- Measure valve deflection.

VALVE DEFLECTION LIMIT (DIAL GAUGE READING)	
Intake	0.02 mm
Exhaust	0.04 mm

- If it exceeds the limit, check valve to valve guide clearance.
  - Measure valve stem diameter and valve guide inner diameter.
  - Check that clearance is within specification.
  - If it exceeds the limit, replace valve or valve guide.

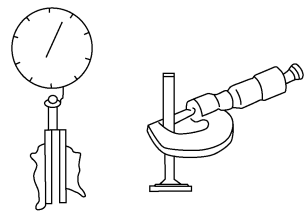

besm020073

VALVE TO VALVE GUIDE CLEARANCE STANDARD	
Intake	0.012 - 0.043 mm
Exhaust	0.032 - 0.063 mm

Assembly

1. Install the valves into the cylinder head (larger diameter on intake side).
2. Install the valve springs.
3. Install the valve spring retainers.

Downloaded from www.Manualslib.com manuals search engine

4. Using valve spring compressor CH-20018 (1), compress the valve springs.
5. Install the valve keepers.

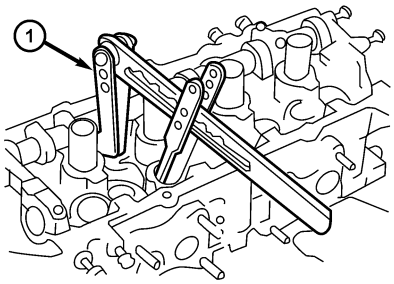

besm020067

6. Strike the valve stem lightly with a plastic hammer after installation to verify proper assembly.

Valve Springs

Specifications

Valve Spring Specifications

DESCRIPTION	SPECIFICATION (mm)
Spring Free Length	47.7
Spring Height At 620 Newtons Of Pressure	32.0

Disassembly

NOTE :
The following special tools are required to perform the repair procedure:
- CH-20011 - Valve Seal Installer
- CH-20012 - Valve Stem Seal Installer Guide
- CH-20013 - Valve Seal Remover
- CH-20017 - Valve Keeper Installer
- CH-20018 - Valve Spring Compressor

1. Using the special tool CH-20018 (1), compress the valve springs.

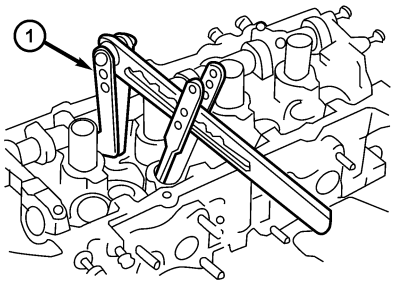

besm020067

Downloaded from www.Manualslib.com manuals search engine

2. Remove the valve keeper (1), valve spring retainer (2).
3. Remove the valve springs (3) from the cylinder head.

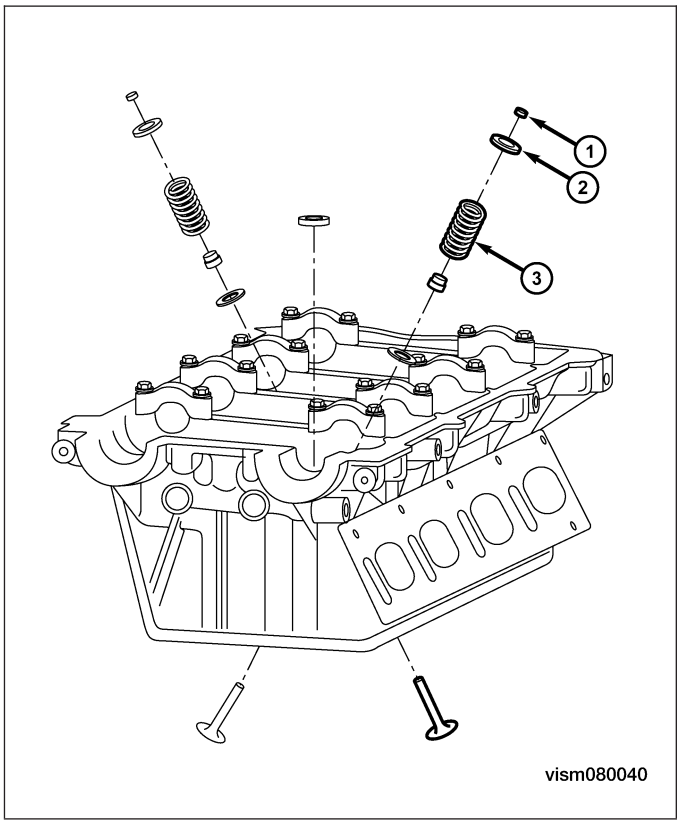

Inspection

- Whenever valves have been removed for inspection, reconditioning or replacement, valve springs should be tested for correct load.
- Discard the springs that do not meet specifications.
- The following specifications apply to both intake and exhaust valve springs.

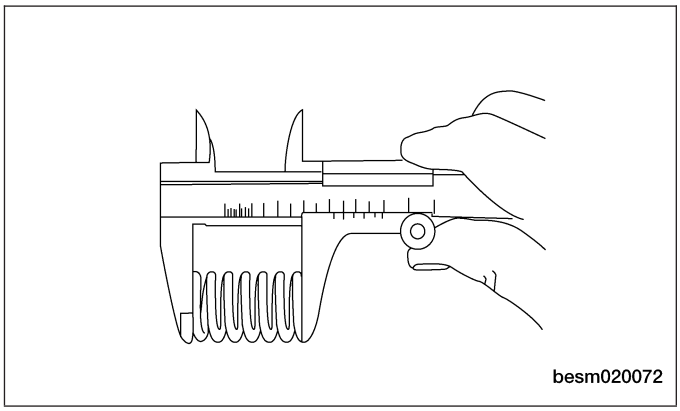

VALVE SPRING LENGTH/HEIGHT	
Spring Free Length	47.7 mm
Spring Height At 620 Newtons Of Pressure	32.0 mm

If it is not within specifications, replace the valve spring.

Downloaded from www.Manualslib.com manuals search engine

Assembly

1. Install the valve springs.
2. Install the valve spring retainers.
3. Using valve spring compressor CH-20018 (1), compress the valve springs.
4. Install the valve keepers.

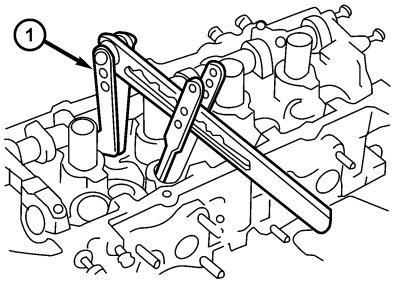

besm020067

5. Strike the valve stem lightly with a plastic hammer after installation to verify proper assembly.

Downloaded from www.Manualslib.com manuals search engine

2.0L ENGINE MECHANICAL

GENERAL INFORMATION 02-77
Description 02-77
Operation 02-77
Specifications 02-77
Special Tools 02-81
Lubrication System 02-84

DIAGNOSIS & TESTING 02-87
Engine Performance Diagnostics 02-87
Engine Mechanical Diagnostics 02-88
Cylinder Compression Pressure Test 02-90
Cylinder Head Gasket Test 02-90

ON-VEHICLE SERVICE 02-91

Accessory Drive Belt 02-91
Removal & Installation 02-91

Air Cleaner Element 02-92
Removal & Installation 02-92

Air Cleaner Housing 02-93
Removal & Installation 02-93

Cylinder Head Cover 02-93
Removal & Installation 02-93

Camshaft 02-94
Removal & Installation 02-94

Cylinder Head 02-97
Removal & Installation 02-97

Front Crankshaft Oil Seal 02-99
Removal & Installation 02-99

Rear Crankshaft Oil Seal 02-100
Removal & Installation 02-100

Engine Mounts 02-103
Removal & Installation - Left Mount 02-103
Removal & Installation - Right Mount 02-104
Removal & Installation - Front Mount 02-104
Removal & Installation - Rear Mount 02-105

Engine Assembly 02-105
Removal & Installation 02-105

Engine Timing Belt 02-112
Removal & Installation 02-112

Exhaust Manifold 02-115
Removal & Installation 02-115

Intake Manifold 02-117
Removal & Installation 02-117

Idler Pulley 02-119
Removal & Installation 02-119

Oil Filter 02-119
Removal & Installation 02-119

Oil Pan 02-120
Removal & Installation 02-120

Oil Pump 02-121
Removal & Installation 02-121

Oil Strainer 02-122
Removal & Installation 02-122

ENGINE UNIT REPAIR 02-123

Engine Block 02-123
Specifications 02-123
Disassembly 02-123
Inspection 02-125
Assembly 02-125

Pistons 02-126
Specifications 02-126
Disassembly 02-127
Inspection 02-128
Assembly 02-130

Connecting Rods 02-131
Specifications 02-131
Disassembly 02-131
Inspection 02-132
Assembly 02-132

Crankshaft 02-133
Specifications 02-133
Disassembly 02-133
Inspection 02-134
Assembly 02-135

CYLINDER HEAD UNIT REPAIR 02-136

Cylinder Head 02-136
Specifications 02-136
Disassembly 02-136
Inspection 02-138
Assembly 02-138

Camshaft 02-139
Specifications 02-139
Disassembly 02-140
Inspection 02-140
Assembly 02-142

Valve & Valve Guides 02-143
Specifications 02-143
Disassembly 02-143
Inspection 02-144
Assembly 02-145

Valve Springs 02-146
Specifications 02-146
Disassembly 02-146
Inspection 02-147
Assembly 02-148

Downloaded from www.Manualslib.com manuals search engine

GENERAL INFORMATION

Description

The 2.0L in-line four cylinder engine has the following features:
- Dual overhead camshafts
- Four valves per cylinder
- Aluminum cylinder head
- Aluminum cylinder block

Operation

The 2.0L engine utilizes 4 valve-per-cylinders and a dual overhead camshaft design. The engine uses an individual coil ignition system. The cylinder block is made of aluminum and the bearing caps are integrated into the lower cylinder block assembly. An aluminum oil pan bolts to the bottom of the lower cylinder block. The camshafts are mounted in the cylinder head and act against valve tappets to open and close the valves. The camshafts are driven off the front of the cylinder head by one timing belt. The belt is driven by a sprocket that is located on the crankshaft. The piston assembly is an aluminum piston with a cast iron connecting rod.

The aluminum cylinder head contains dual overhead camshafts with 4 valve-per-cylinder construction. The valves are arranged in two in-line banks. The cylinder head incorporates powdered metal valve guides and seats. The cylinder head is sealed to the block using a multi-layer steel head gasket and retaining bolts.

Specifications

2.0L Engine Specifications

DESCRIPTION	SPECIFICATION
Type	In-Line OHV, DOHC
Number of Cylinders	4
Compression Ratio	10:1
Compression Pressure	10 - 15 bar
Max. Compression Pressure Variation Between Cylinders	25%
Stroke	90 mm
Bore	83.5 mm
Displacement	1971 cc
Firing Order	1-3-4-2

Mechanical Specifications

DESCRIPTION	ITEM	STANDARD	LIMIT
Engine Oil Pressure	Lower Idle Speed (800 ± 50 RPM)	1.2 - 1.5 bar	-
	High Idle Speed (2000 RPM)	3.2 - 3.5 bar	-
	High Speed (4000 RPM)	3.7 ± 0.5 bar	-
Engine Block Clearance	Surface Distortion	-	0.15 mm
	Inner Diameter	83.500 - 83.510 mm	-
	Out-Of-Round	-	< 0.008 mm
	Taper	-	< 0.01 mm
Piston Ring Groove Clearance	First Ring	0.04 - 0.08 mm	-
	Second Ring	0.0251 - 0.01 mm	-

Downloaded from www.Manualslib.com manuals search engine

DESCRIPTION	ITEM	STANDARD	LIMIT
Piston Ring End Gap Clearance	First Ring	0.2 - 0.4 mm	0.8 mm
	Second Ring	0.4 - 0.6 mm	1.0 mm
Piston To Piston Pin Clearance	-	0.002 - 0.013 mm	-
Piston Diameter	-	83.451 - 83.469 mm	-
Ring Groove Clearance	First Ring	0.04 - 0.08 mm	-
	Second Ring	0.01 - 0.0251 mm	-
Connecting Rod Radial Clearance	-	0.016 - 0.051 mm	-
Connecting Rod Axial Clearance	-	0.002 - 0.013 mm	-
Diameter Of Crankshaft Main Journals	-	53.981 - 54 mm	-
Diameter Of Crankshaft Rod Journals	-	47.884 - 47.9 mm	-
Out-Of-Round Maximum Of Crankshaft Main Journals	-	-	< 0.008 mm
Axial Clearance Of Crankshaft	-	0.07 - 0.265 mm	-
Radial Clearance Of Crankshaft	-	0.0035 - 0.034 mm	-
Coaxality Crankshaft Main Journal	-	-	< 0.005 mm
Thrust Washer Thickness	-	2.4 - 2.405 mm	-
Oil Clearance Of Crankshaft Rod and Main Journals	-	0.022 mm	0.058 mm
Cylinder Head Flatness	-	-	< 0.04 mm
Intake Valve Deflection	-	-	< 0.02 mm
Exhaust Valve Deflection	-	-	< 0.04 mm
Spring Height	-	47.7 mm	-
Spring Height At 620 Newtons Of Pressure	-	32.0 mm	-
Intake Cam Lobe Height	-	37.15 mm	-
Exhaust Cam Lobe Height	-	37.05 mm	-
Camshaft Journal #1 Outer Diameter	-	31.934 - 31.95 mm	-
Camshaft Journal #2, #3, #4, #5, Outer Diameter	-	23.947 - 23.96 mm	-
Camshaft Cam Bearing #1 Inner Diameter	-	32 - 32.025 mm	-
Camshaft Cam Bearing #2, #3, #4, #5, Inner Diameter	-	24 - 24.021 mm	-
Camshaft Journal #1 Clearance	-	0.05 - 0.091 mm	-
Camshaft Journal #2, #3, #4, #5 Clearance	-	0.04 - 0.074 mm	-

Downloaded from www.Manualslib.com manuals search engine

DESCRIPTION	ITEM	STANDARD	LIMIT
Intake Camshaft Axial Clearance	-	0.15 - 0.20 mm	-
Exhaust Camshaft Axial Clearance	-	0.15 - 0.20 mm	-
Intake Valve Guide Clearance	-	0.012 - 0.043 mm	-
Exhaust Valve Guide Clearance	-	0.032 - 0.063 mm	-
Valve Outer Diameter	Intake Valve	5.98 ± 0.008 mm	-
	Exhaust Valve	5.96 ± 0.008 mm	-
Valve Guide Inner Diameter	Intake Valve	5.4 ± 0.1 mm	-
	Exhaust Valve	5.4 ± 0.1 mm	-
Fringe Thickness On Top Of Valve	Intake Valve	0.3 ± 0.15 mm	-
	Exhaust Valve	0.3 ± 0.15 mm	-
Valve Tilt Angle	Intake Valve	65°	-
	Exhaust Valve	68°	-
Valve Height	Intake Valve	107.998 mm	-
	Exhaust Valve	106.318 mm	-

Torque Specifications

CAUTION:
When torquing a fastener in two steps, DO NOT use a torque wrench for the second step.

DESCRIPTION	TORQUE (N·m)
Accessory Drive Belt Tensioner Pulley Bolt	35
Camshaft Bearing Cap Bolts	11
Clutch Pressure Plate Bolts	25
Connecting Rod Cap Bolts	1st Step: Tighten the bolt to 25 N·m 2nd Step: Tighten the bolt an additional 90°
Crankshaft Holder	28
Crankshaft Main Bearing Cap Bolts	1st Step: Tighten the bolt to 45 N·m 2nd Step: Tighten the bolt an additional 180°
Crankshaft Timing Belt Pulley Bolt	1st Step: Tighten the bolt to 130 N·m 2nd Step: Tighten the bolt an additional 65°
Crankshaft Vibration Damper Bolts	25
Cylinder Head Cover Bolts	11
Cylinder Head Bolts	1st Step: Tighten the bolt to 40 ± 5 N·m 2nd Step: Tighten the bolt an additional 90 ± 5° 3rd Step: Tighten the bolt an additional 90 ± 5°
Dipstick Bracket Bolts	11
Drive Plate Bolts (automatic transaxle)	75
Engine Left Mount Bolt	70
Engine Right Mount Bolt	70
Engine Front Mount Bolt	60
Engine Rear Mount Bolt	60

Downloaded from www.Manualslib.com manuals search engine

DESCRIPTION	TORQUE (N·m)
Engine To Transaxle Bolts	80
Exhaust Manifold Nuts	25
Exhaust Manifold Heat Shield Bolts	15
Exhaust Camshaft Timing Belt Pulley Bolt	120
Flywheel Bolts (manual transaxle)	75
Fuel Rail Bracket Bolts	11
Idler Pulley Bolt	40
Intake Camshaft Timing Belt Pulley Bolt	120
Intake Manifold Bolts	10
Intake Manifold Nuts	11
Intake Manifold Bracket Bolts	25
Lower Idler Pulley Bolt	45
Lower Cylinder Block Bolts	23
Oil Filter	25
Oil Pan Bolts	18
Oil Drain Plug	40
Oil Strainer Bolts	18
Oil Pump Bolts	11 (Apply with Loctite 5910 Thread-Locker)
Rear Timing Cover Bolts	7
Timing Belt Upper Cover Bolts	11
Timing Belt Lower Cover Bolts	11
Timing Belt Tensioner Assembly	27
Timing Belt Tensioner Pulley Bolt	30
Throttle Body Bolts	11
Upper Idler Pulley Bolt	45

Downloaded from www.Manualslib.com manuals search engine

Special Tools

Right Engine Mount Bolt Remover CH-20001	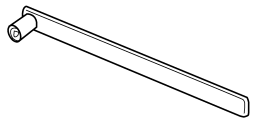 besm020079
Camshaft Seal Installer CH-20002	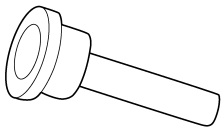 besm020001
Crankshaft Holder CH-20003	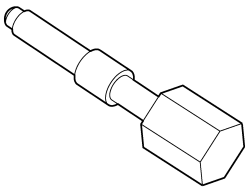 besm020009
Valve Spring Compressor Adaptor CH-20004	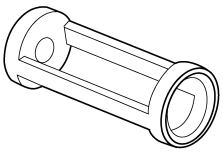 besm020080
Rear Crankshaft Oil Seal Installer CH-20005	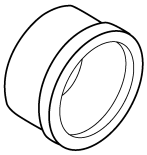 besm020003

Downloaded from www.Manualslib.com manuals search engine

Rear Crankshaft Oil Seal Guide CH-20006	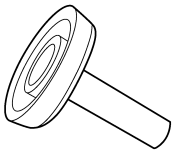 besm020002
Front Crankshaft Seal Installer CH-20007	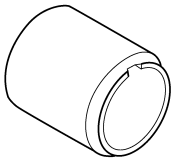 besm020004
Front Crankshaft Seal Guide CH-20008	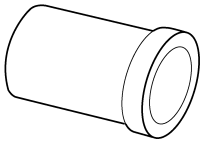 besm020005
Camshaft Holder CH-20010	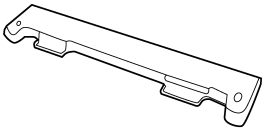 besm020008
Valve Seal Installer CH-20011	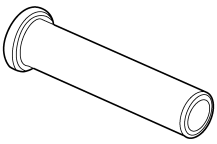 besm020081

Downloaded from www.Manualslib.com manuals search engine

Valve Stem Seal Installer Guide CH-20012	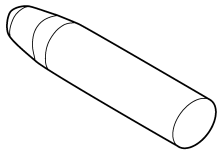 besm020006
Valve Seal Remover CH-20013	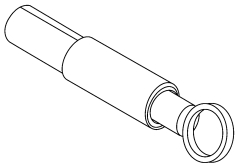 besm020082
Valve Keeper Installer CH-20017	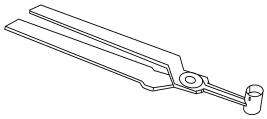 besm020084
Valve Spring Compressor CH-20018	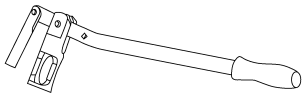 besm020007
Crankshaft Belt Pulley Fixture CH-20019	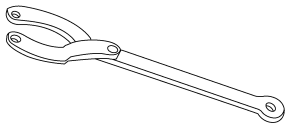 besm020085

Downloaded from www.Manualslib.com manuals search engine

Engine Hoist	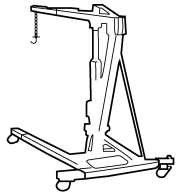 besm020010
Flywheel Fixture CH-20043	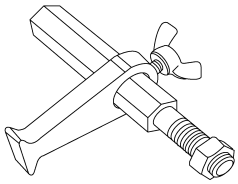 ltsm020211
Oil Filter Remover CH-10003	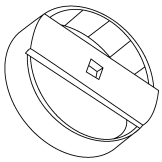 besm020087

Lubrication System

The engine lubrication system operates as follows:

- Oil is drawn into the oil pump through the oil pump strainer tube in the sump of the oil pan.
- Oil is pumped through the oil filter on the cylinder block.
- Oil enters the main oil gallery where it is distributed to the crankshaft main journals and to the cylinder head.
- From the main journals, the oil is routed through cross-drilled passages in the crankshaft to lubricate the connecting rod bearings. Controlled leakage through the crankshaft main bearings and connecting rod bearings is slung radially outward to cool and lubricate the cylinder walls as well as the entire connecting rod, piston and piston ring assembly.
- The engine lubrication system is a full-flow filtration, pressure feed type. The oil pump body is mounted to the engine block. The pump inner rotor is driven by the crankshaft.

Engine Oil Pressure Specifications

Lower Idle Speed (800 ± 50 RPM)	1.2 - 1.5 bar
High Idle Speed (2000 RPM)	3.2 - 3.5 bar
High Speed (4000 RPM)	3.7 ± 0.5 bar

Downloaded from www.Manualslib.com manuals search engine

Engine Lubrication System Exploded View

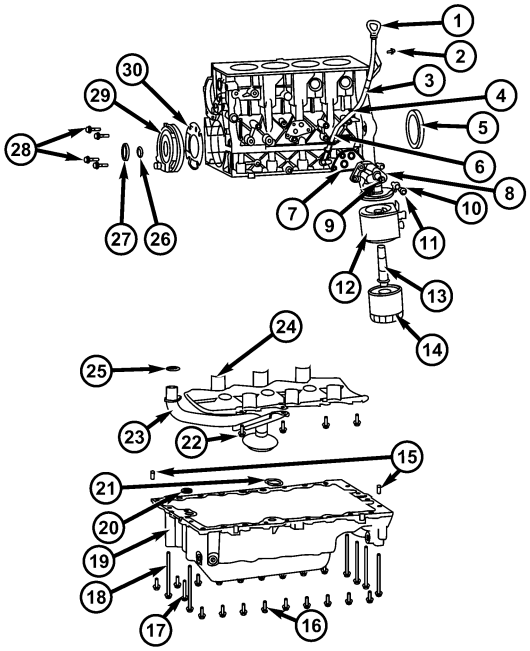

ltsm020161

1 - Oil Dipstick	16 - Oil Pan Bolt
2 - Oil Dipstick Bolt	17 - Oil Pan Bolt
3 - Oil Dipstick Bracket	18 - Oil Pan Bolt
4 - Oil Dipstick Guide	19 - Oil Pan
5 - Crankshaft Rear Oil Seal	20 - O-Ring
6 - O-Ring	21 - O-Ring
7 - Oil Filter Bracket Gasket	22 - Oil Pump Strainer Bolt
8 - Oil Filter Bracket	23 - Oil Pump Strainer
9 - Pressure-Relief Plunger	24 - Baffle Plate
10 - Flange Bolt	25 - O-Ring
11 - Flange Bolt	26 - O-Ring
12 - Oil Cooler	27 - Crankshaft Front Oil Seal
13 - Oil Filter Connector	28 - Oil Pump Bolt
14 - Oil Filter	29 - Oil Pump Assembly
15 - Dowel Pin	30 - Oil Pump Assembly Gasket

Downloaded from www.Manualslib.com manuals search engine

Engine Oil Flow Diagram

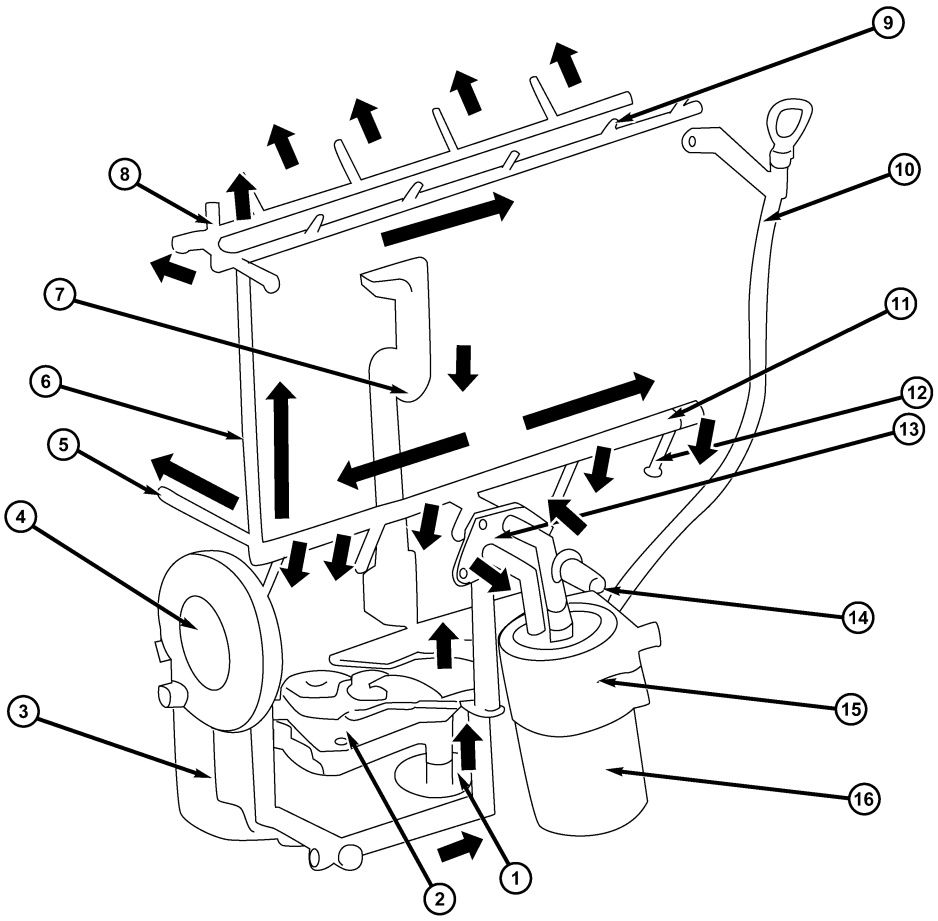

besm020088

1 - Oil Pump Strainer	9 - To Middle Bearing Cap
2 - Baffle Plate	10 - Oil Dipstick
3 - Oil Pan	11 - To Crankcase
4 - Oil Pump	12 - Crankcase Pipe
5 - Turbocharger Inlet Oil Passage (if equipped)	13 - Oil Filter Bracket
6 - To Cylinder Head	14 - Oil Pressure Switch
7 - Oil Return Passage	15 - Oil Cooler
8 - To Front Bearing Cap	16 - Oil Filter

Downloaded from www.Manualslib.com manuals search engine

DIAGNOSIS & TESTING

Engine Performance Diagnostics

CONDITION	POSSIBLE CAUSE	CORRECTION
Engine Does Not Start	1. Weak battery. 2. Corroded or loose battery connections. 3. Faulty starter. 4. Faulty coil(s) or control unit. 5. Incorrect spark plug gap. 6. Contamination in fuel system. 7. Faulty fuel pump. 8. Incorrect timing.	1. Test battery. Charge or replace if necessary. 2. Clean and tighten battery connections. Apply a coat of light mineral grease to terminals. 3. Test starting system. Check for codes. (Refer to Appropriate Diagnostic Information) 4. Test and replace as needed. (Refer to Appropriate Diagnostic Information) 5. Set gap. 6. Clean system and replace fuel filter. 7. Test fuel pump and replace as needed. (Refer to Appropriate Diagnostic Information) 8. Check for a skipped timing belt.
Engine Stalls Or Idles Rough	1. Idle speed too low. 2. Incorrect fuel mixture. 3. Intake manifold leakage. 4. Faulty ignition coil(s).	1. Test minimum air flow. (Refer to Appropriate Diagnostic Information) 2. (Refer to Appropriate Diagnostic Information) 3. Inspect intake manifold, manifold gasket, and vacuum hoses. 4. Test and replace if necessary. (Refer to Appropriate Diagnostic Information)
Engine Loss Of Power	1. Dirty or incorrectly gapped spark plugs. 2. Contamination in fuel system. 3. Faulty fuel pump. 4. Incorrect valve timing. 5. Leaking cylinder head gasket. 6. Low compression. 7. Burned, warped, excessive clearance, or pitted valves. 8. Plugged or restricted exhaust system. 9. Faulty ignition coil(s). 10. Burned spark plugs.	1. Clean spark plugs and set gap. 2. Clean system and replace fuel filter. 3. Test and replace if necessary. (Refer to Appropriate Diagnostic Information) 4. Correct valve timing. 5. Replace cylinder head gasket. 6. Test compression of each cylinder. 7. Replace valves. 8. Perform exhaust restriction test. Install new parts. 9. Test and replace if necessary. (Refer to Appropriate Diagnostic Information) 10. Replace spark plugs.

Downloaded from www.Manualslib.com manuals search engine

CONDITION	POSSIBLE CAUSE	CORRECTION
Engine Miss On Acceleration	1. Dirty or incorrectly gapped spark plugs. 2. Contamination in fuel system. 7. Burned, warped, excessive clearance, or pitted valves. 4. Faulty ignition coil(s).	1. Clean spark plugs and set gap. 2. Clean fuel system and replace fuel filter. 3. Replace valves. 4. Test and replace if necessary. (Refer to Appropriate Diagnostic Information)
Engine Miss At High Speed	1. Dirty or incorrect spark plug gap. 2. Faulty ignition coil(s). 3. Dirty fuel injector(s). 4. Contamination in fuel system.	1. Clean spark plugs and set gap. 2. Test and replace if necessary. (Refer to Appropriate Diagnostic Information) 3. Test and replace if necessary. (Refer to Appropriate Diagnostic Information) 4. Clean system and replace fuel filter.

Engine Mechanical Diagnostics

CONDITION	POSSIBLE CAUSE	CORRECTION
Valve Train Noise	1. High or low oil level in crankcase. 2. Thin or diluted oil. 3. Thick oil. 4. Low oil pressure. 5. Worn cam lobe. 6. Worn valve guides. 7. Excessive runout of valve seats on valve faces.	1. Check and correct engine oil level. 2. Change oil to correct viscosity. 3. Change engine oil and filter. 4. Check and correct engine oil level. 5. Install new camshaft. 6. Replace cylinder head. 7. Grind valve seats and replace valves.
Connecting Rod Noise	1. Insufficient oil supply. 2. Low oil pressure. 3. Thin or diluted oil. 4. Excessive bearing clearance. 5. Connecting rod journal out-of-round. 6. Connecting rod out-of-round. 7. Misaligned connecting rods. 8. Connecting rod nuts loose.	1. Check engine oil level. 2. Check engine oil level. Inspect oil pump relief valve and spring. 3. Change oil to correct viscosity. 4. Measure bearings for correct clearance. Repair if necessary. 5. Replace crankshaft or grind surface. 6. Replace connecting rod. 7. Replace bent connecting rods. 8. Tighten the connecting rod nuts.
Main Bearing Noise	1. Insufficient oil supply. 2. Low oil pressure. 3. Thin or diluted oil. 4. Excessive bearing clearance. 5. Excessive end play. 6. Crankshaft journal out-of-round or worn. 7. Loose flywheel or torque converter.	1. Check engine oil level. 2. Check engine oil level. Inspect oil pump. 3. Change oil to correct viscosity. 4. Measure bearings for correct clearance. Repair if necessary. 5. Check thrust bearing for wear on flanges. 6. Replace crankshaft or grind journals. 7. Tighten to correct torque.

Downloaded from www.Manualslib.com manuals search engine

CONDITION	POSSIBLE CAUSE	CORRECTION
Oil Pressure Drop	1. Low oil level. 2. Faulty oil pressure sending unit. 3. Low oil pressure. 4. Clogged oil filter. 5. Thin or diluted oil. 6. Excessive bearing clearance.	1. Check engine oil level. 2. Install new sending unit. 3. Check sending unit and main bearing oil clearance. 4. Install new oil filter. 5. Change oil to correct viscosity. 6. Measure bearings for correct clearance.
Oil Leaks	1. Misaligned or deteriorated gaskets. 2. Loose fastener, broken or porous metal part. 3. Misaligned or deteriorated cup or threaded plug.	1. Replace gasket. 2. Tighten, repair or replace the part. 3. Replace if necessary.
Oil Consumption Or Spark Plugs Fouled	1. PCV system malfunction. 2. Worn, scuffed or broken rings. 3. Carbon in oil ring slots. 4. Rings fitted too tightly in grooves. 5. Worn valve guide(s). 6. Valve stem seal(s) worn or damaged.	1. Check system and repair if necessary. 2. Hone cylinder bores. Install new rings. 3. Install new rings. 4. Remove rings and check grooves. If groove is not proper width, replace piston. 5. Replace cylinder head. 6. Replace seal(s).

Downloaded from www.Manualslib.com manuals search engine

Cylinder Compression Pressure Test

- The result of a cylinder compression pressure test can be utilized to diagnose several engine malfunctions.
- Ensure the battery is completely charged and the engine starter motor is in good operating condition. Otherwise the indicated compression pressures may not be valid for diagnostic purposes.
  - Check engine oil level and add oil if necessary.
  - Disconnect the spark plug wires.
  - Remove all spark plugs from engine (as spark plugs are being removed, check electrodes for abnormal firing indicators fouled, hot, oily, etc.).
  - Record cylinder number of each spark plug for future reference.
  - Disconnect fuel injector electrical connectors.
  - Be sure throttle blade is fully open during the compression check.
  - Insert compression pressure adaptor or the equivalent into each spark plug hole in cylinder head.
  - Crank engine until maximum pressure is reached on gauge. Record each cylinder pressure.
  - Compression should not be less than 1000 kPa and not vary more than 25 percent from cylinder to cylinder.
  - If one or more cylinders have abnormally low compression pressures, repeat the compression test.
  - If the same cylinder or cylinders repeat an abnormally low reading on the second compression test, it could indicate the existence of a problem with the cylinder in question.

NOTE :
The recommended compression pressures are to be used only as a guide to diagnosing engine problems. An engine should not be disassembled to determine the cause of low compression unless some malfunction is present.

Cylinder Head Gasket Test

- A cylinder head gasket leak can be located between adjacent cylinders, between a cylinder and the adjacent water jacket or from an oil passage to the exterior of the engine.
- Possible indications of the cylinder head gasket leaking between adjacent cylinders are:
  - Loss of engine power
  - Engine misfiring
  - Poor fuel economy
- Possible indications of the cylinder head gasket leaking between a cylinder and an adjacent water jacket are:
  - Engine overheating
  - Loss of coolant
  - Excessive steam (white smoke) emitting from exhaust
  - Coolant foaming

Downloaded from www.Manualslib.com manuals search engine

ON-VEHICLE SERVICE

Accessory Drive Belt

Removal & Installation

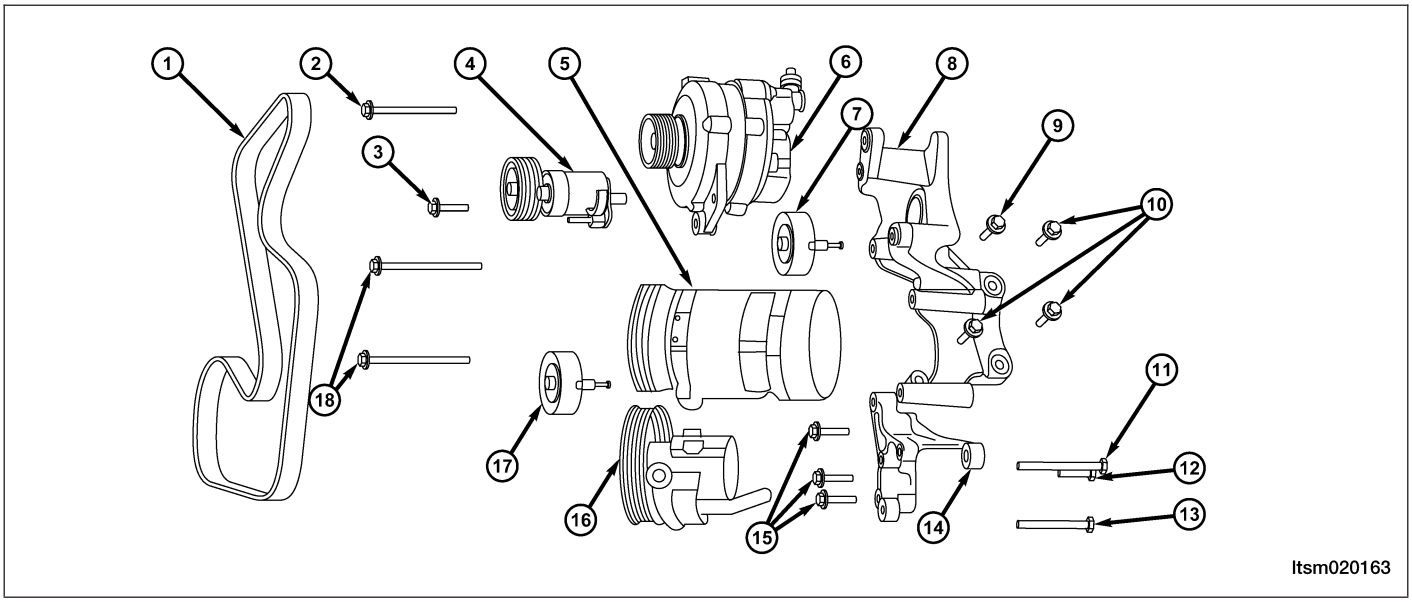

1 - Drive Belt	10 - Generator Bracket Bolt
2 - Generator Bolt	11 - Power Steering Pump Bolt
3 - Tensioner Pulley Bolt	12 - Power Steering Pump Bolt
4 - Tensioner	13 - Power Steering Pump Bolt
5 - Compressor	14 - Power Steering Pump Bracket
6 - Generator	15 - Power Steering Pump Bracket Bolt
7 - Idler Pulley	16 - Power Steering Pump
8 - Generator Bracket	17 - Idler Pulley
9 - Generator Bracket Bolt	18 - Compressor Bolt

WARNING!

Inspect the drive belt only when the engine is stopped.

1. While using a suitable tool and securely holding the hexagonal portion of the drive belt tensioner, rotate the pulley counterclockwise to loosen the drive belt.

WARNING!

Avoid placing hands near the drive belt tensioner while it is being held.

Downloaded from www.Manualslib.com manuals search engine

2. Remove the drive belt.
3. Remove accessory drive belt tensioner (1)

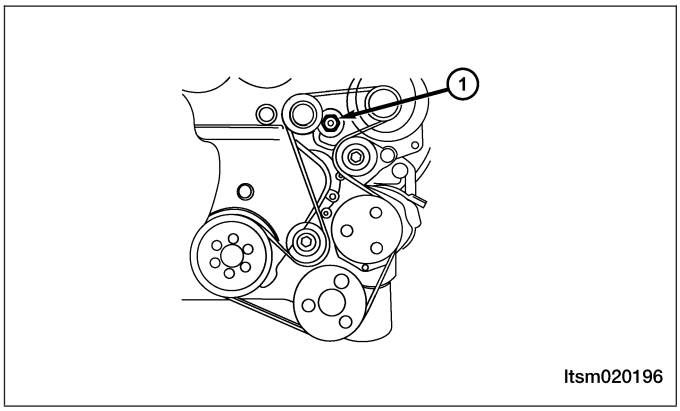

4. Installation is in the reverse order of removal.

Air Cleaner Element

Removal & Installation

1. Unhook the air cleaner case side clips (1) and raise the air cleaner case (upper).

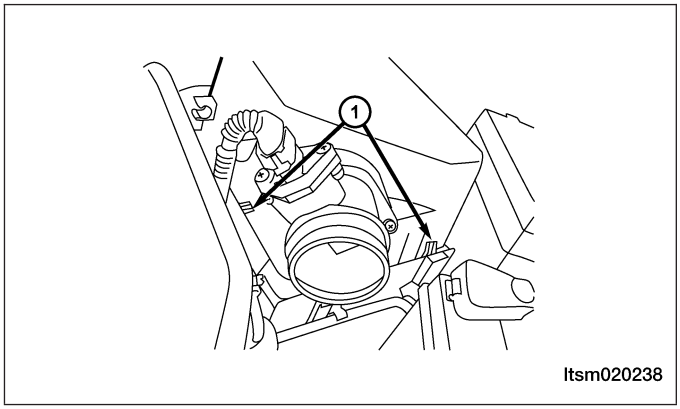

2. Remove the air cleaner element.
3. Install a new air cleaner element.
4. Installation is in the reverse order of removal.

Downloaded from www.Manualslib.com manuals search engine

Air Cleaner Housing

Removal & Installation

1. Disconnect the negative battery cable.
2. Disconnect the air flow sensor electrical connector (1.8L Engine).
3. Loosen the clamp (1) between the air intake air hose and the air cleaner and remove the intake air hose.

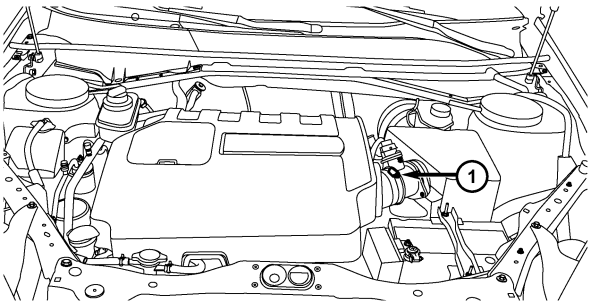

ltsm020242

4. Remove the screws (1) securing the air cleaner housing to its base.

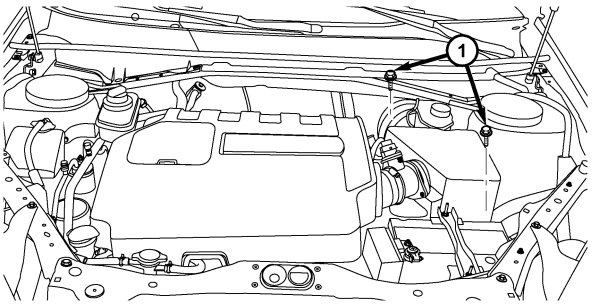

ltsm020243

5. Remove the air cleaner housing.
6. Remove the air cleaner base.
7. Installation is in the reverse order of removal.

Cylinder Head Cover

Removal & Installation

1. Disconnect the negative battery cable.
2. Remove the engine cover.
3. Use compressed air to blow dirt and debris off the cylinder head cover prior to removal.
4. Disconnect the camshaft position sensor electrical connector.
5. Remove the camshaft position sensor (2) and set it aside.

Downloaded from www.Manualslib.com manuals search engine

6. Remove the spark plug wires (3) and set them aside.
7. Remove the PCV hose (1) from cylinder head cover.

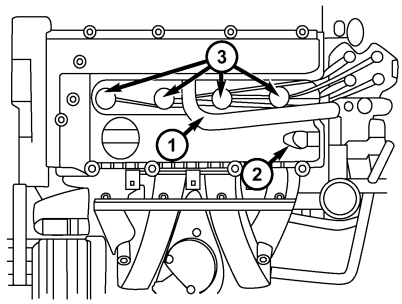

besm020022

8. Remove the cylinder head cover bolts (1).
   (Tighten: Cylinder head cover bolts to 11 N·m)
9. Remove the cylinder head cover (2) from the cylinder head.
10. Remove the cylinder head cover gasket (3).
11. Installation is in the reverse order of removal.

NOTE :
Install a new cylinder head cover gasket during installation.

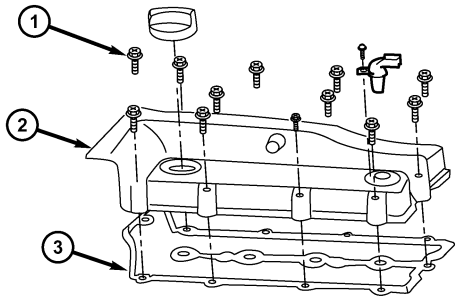

ltsm020198

Camshaft

Removal & Installation

NOTE :
The following special tools are required to perform the repair procedure:
- CH-20002 - Camshaft Seal Installer

1. Remove the accessory drive belt (See Accessory Drive Belt Removal & Installation in Section 02 Engine).
2. Remove the engine timing belt (See Engine Timing Belt Removal & Installation in Section 02 Engine).
3. Remove the cylinder head cover (See Cylinder Head Cover Removal & Installation in Section 02 Engine).
4. Remove the intake or exhaust camshaft timing belt pulley.
   (Tighten: Camshaft timing belt pulley bolt to 120 N·m)

Downloaded from www.Manualslib.com manuals search engine

5. Remove the rear timing cover of the timing pulley. (Tighten: Rear timing cover bolts to 7 N·m)

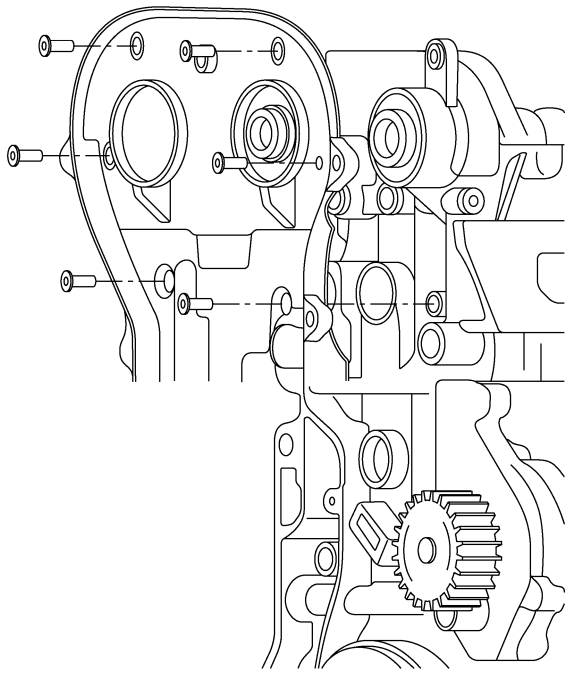

besm020034

6. Remove the camshaft bearing cap bolts. (Tighten: Camshaft bearing cap bolts to 11 N·m)

   NOTE: Equally loosen camshaft bearing cap bolts in several steps.

7. Remove the camshaft bearing caps and place them in proper order.

   NOTE: The camshaft bearing caps are marked for identification.

8. Remove the camshafts and then remove the camshaft seals.

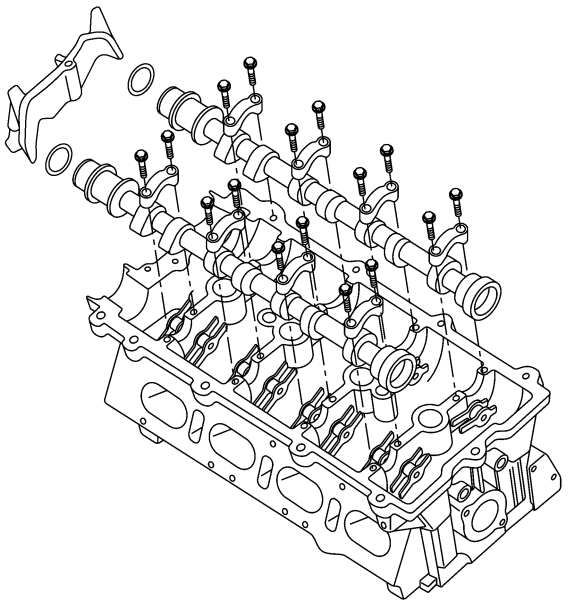

besm020035

9. Installation is in the reverse order of removal.

Downloaded from www.Manualslib.com manuals search engine

Installation Notes:

- Use special tool CH-20010 (1), to install the camshaft holder to hold the camshafts in place.

NOTE :
The camshaft holder will prevent the camshafts from rotating in either direction.

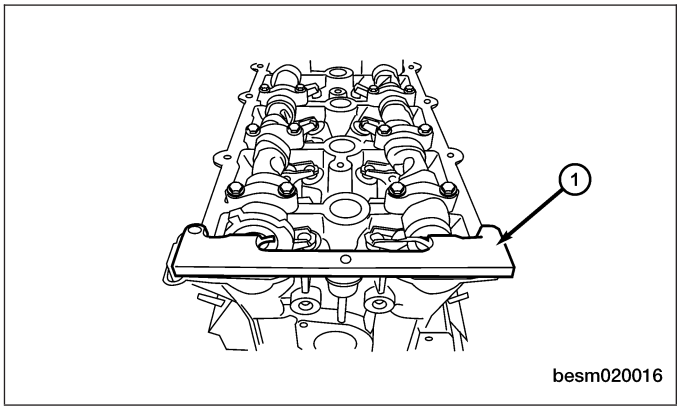

- Use special tool CH-20002 (1), to install the camshaft seal.
- Install the intake and exhaust camshaft bearing caps in the proper order.
- Slowly tighten bolts to the specified torque.

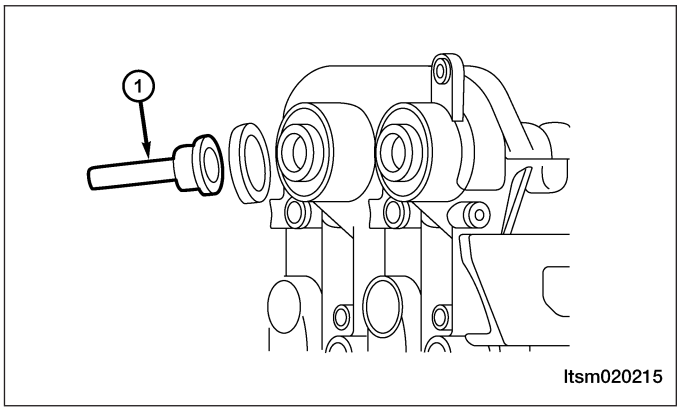

- Follow the torque sequence as shown.

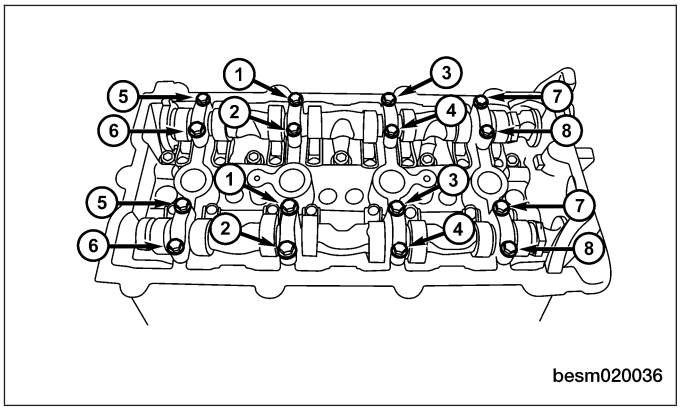

Downloaded from www.Manualslib.com manuals search engine

Cylinder Head

Removal & Installation

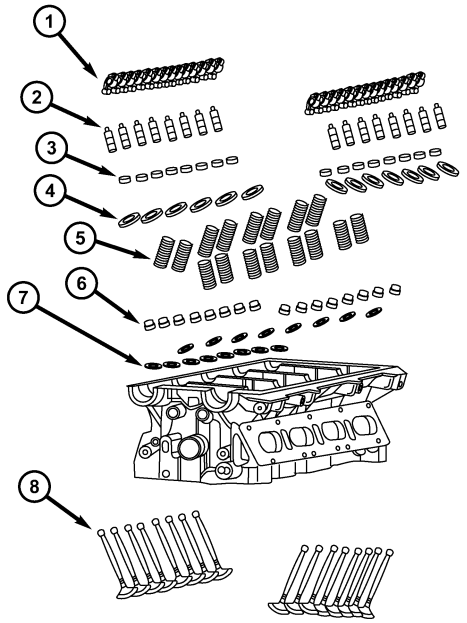

ltsm020167

1 - Rocker Arms	5 - Valve Springs
2 - Hydraulic Tappets	6 - Valve Oil Seals
3 - Valve Keepers	7 - Valve Spring Lower Retainers
4 - Valve Spring Upper Retainers	8 - Valves

NOTE :
Replacement cylinder head comes complete with valves, seals, springs, retainers, keepers, and camshafts.

1. Remove engine timing belt (See Engine Timing Belt Removal & Installation in Section 02 Engine).
2. Remove the cylinder head cover (See Cylinder Head Cover Removal & Installation in Section 02 Engine).
3. Remove the camshafts (See Camshaft Removal & Installation in Section 02 Engine).
4. Remove intake manifold (See Intake Manifold Removal & Installation in Section 02 Engine).
5. Remove exhaust manifold (See Exhaust Manifold Removal & Installation in Section 02 Engine).
6. Remove water pipe and thermostat assembly.

Downloaded from www.Manualslib.com manuals search engine

7. Remove the cylinder head bolts in the order shown.

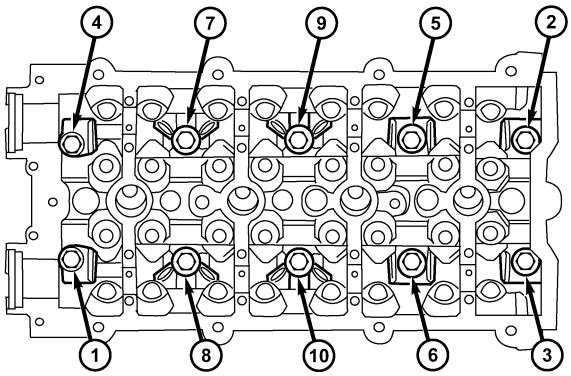

besm020065

8. Remove cylinder head gasket.
9. Installation is in the reverse order of removal.

Installation Notes:

- Ensure cylinder head bolt holes in the block are clean, dry (free of residual oil or coolant), and threads are not damaged.
- The cylinder head bolts should not be reused. The new bolts should be examined before use. If the bolts are stretched, the bolts should be replaced.
- Position the new cylinder head gasket on the engine block with the part number facing up. Ensure gasket is seated over the locating dowels in the block.
- Before installing the bolts, the threads should be lightly coated with engine oil.

Downloaded from www.Manualslib.com manuals search engine

Install the cylinder head bolts in the order shown. Torque the cylinder head bolts in the following three step sequence:

1st Step: Tighten the bolt to 40 ± 5 N·m

2nd Step: Tighten the bolt an additional 90 ± 5°

3rd Step: Tighten the bolt an additional 90 ± 5°

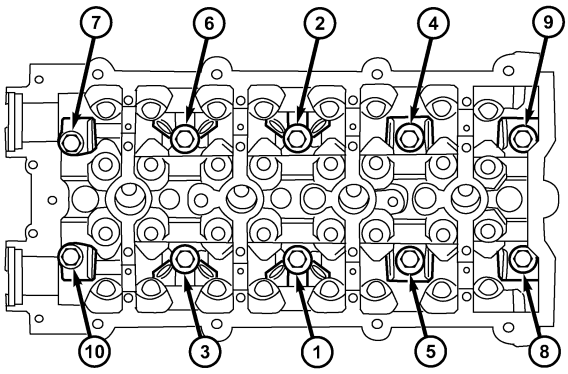

ltsm020236

Front Crankshaft Oil Seal

Removal & Installation

NOTE :

The following special tools are required to perform the repair procedure:

- CH-20007 - Front Crankshaft Seal Installer
- CH-20008 - Front Crankshaft Seal Guide
- CH-20019 - Crankshaft Belt Pulley Fixture

1. Remove the accessory drive belt (See Accessory Drive Belt Removal & Installation in Section 02 Engine).
2. Remove the crankshaft vibration damper bolts (1). (Tighten: Crankshaft vibration damper bolts to 25 N·m)

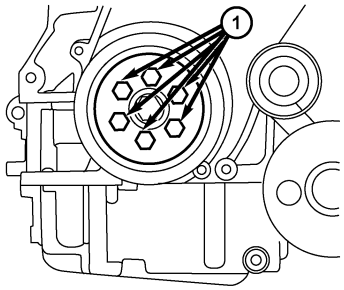

besm020055

3. Remove the engine timing belt (See Engine Timing Belt Removal & Installation in Section 02 Engine).

Downloaded from www.Manualslib.com manuals search engine

4. Remove the crankshaft timing belt pulley bolt (2) from the crankshaft.
   (Tighten: Crankshaft timing belt pulley bolt to 130 N·m and an additional 65°)
5. Remove the key-way from the crankshaft.
6. Using an appropriate tool, remove the front crankshaft oil seal (1).

CAUTION:
Be careful not to damage the front cover seal surface while removing the seal.

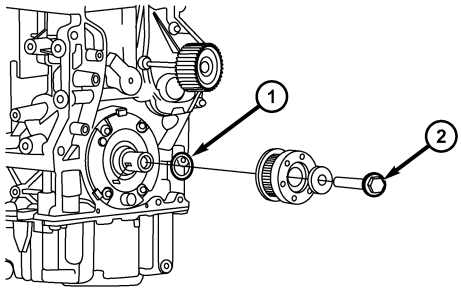

ltsm020199

7. Installation is in the reverse order of removal.

Installation Notes:

- Lubricate the new front seal with engine oil prior to assembly.
- Use the front crankshaft seal installer CH-20007 (1), to install the new seal.

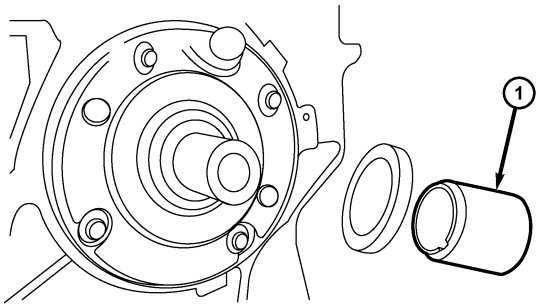

ltsm020216

Rear Crankshaft Oil Seal

Removal & Installation

NOTE :
The following special tools are required to perform the repair procedure:
- CH-20005 - Rear Crankshaft Oil Seal Installer
- CH-20006 - Rear Crankshaft Oil Seal Guide
- CH-20043 - Flywheel Fixture

1. Remove the transaxle assembly (See Transaxle Assembly Removal & Installation in Section 08 Transaxle and Transfer Case).
2. Using special tool CH-20043 (1), hold the flywheel.

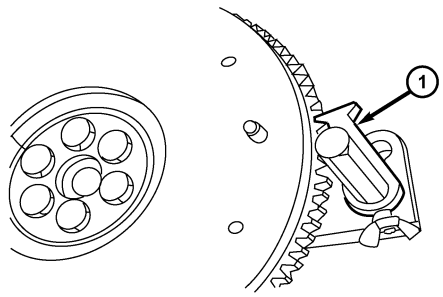

ltsm080145

Downloaded from www.Manualslib.com manuals search engine

3. If equipped with manual transaxle, remove clutch pressure plate retaining bolts (1) and remove the clutch pressure plate.
   (Tighten: Clutch pressure plate bolts to 25 N·m)

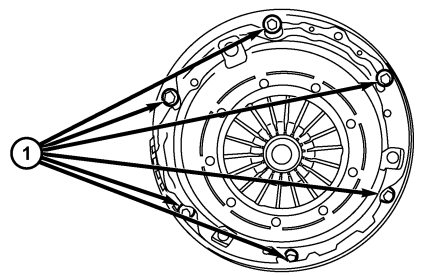

besm080046

4. If equipped with manual transaxle, remove the flywheel bolts (1) and then remove the flywheel.
   (Tighten: Flywheel bolts to 75 N·m)

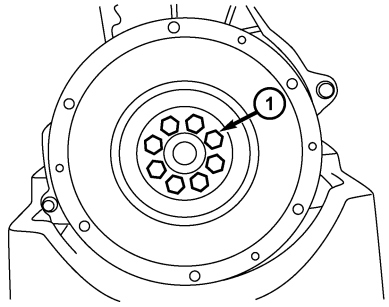

besm020058

5. If equipped with automatic transaxle, remove the drive plate retaining bolts (1) and then remove drive plate.
   (Tighten: Drive plate bolts to 75 N·m)

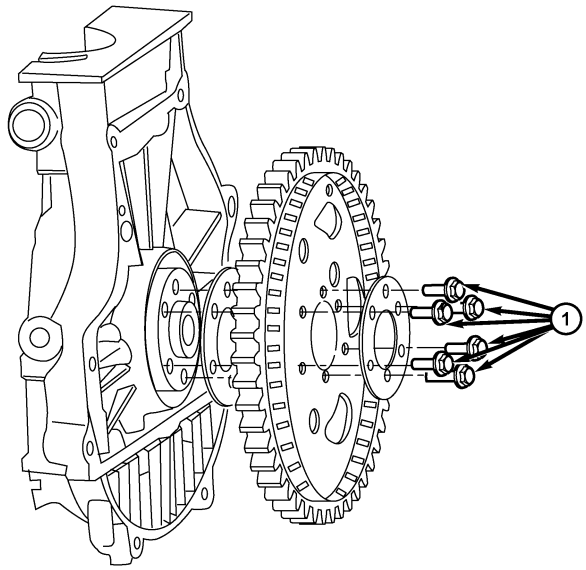

besm020031

6. Remove the rear oil seal using a suitable tool.
7. Installation is in the reverse order of removal.

Downloaded from www.Manualslib.com manuals search engine

Installation Notes:

- When installing seal, lubricate seal guide with clean engine oil.
- Position the seal over the rear crankshaft seal guide.
- Use special tool CH-20005 (2) and CH-20006 (1), to install the rear crankshaft oil seal.
- Ensure that the lip of the seal is facing toward the crankcase during installation.

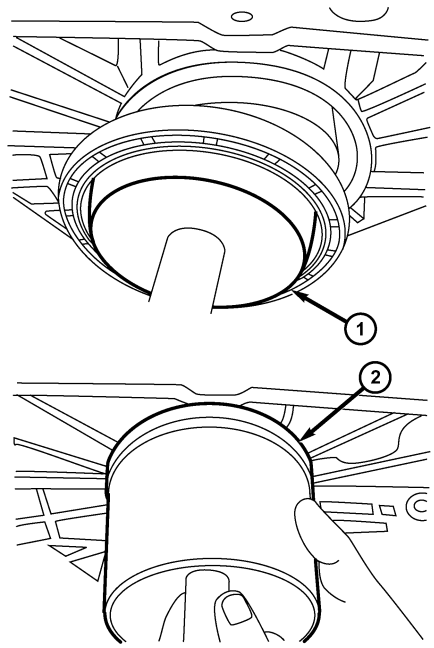

ltsm020217

Downloaded from www.Manualslib.com manuals search engine

Engine Mounts

Removal & Installation - Left Mount

NOTE :
The following special tools are required to perform the repair procedure:
- Engine Hoist

1. Disconnect the negative battery cable.
2. Support the engine with the engine hoist.
3. Remove the air cleaner housing. (See Air Cleaner Housing Removal & Installation in Section 02 Engine).
4. Remove the engine left mount retaining bolts (2) and remove the engine left mount bracket bolts (1). (Tighten: Engine left mount bolts to 70 N·m)
5. Installation is in the reverse order of removal.

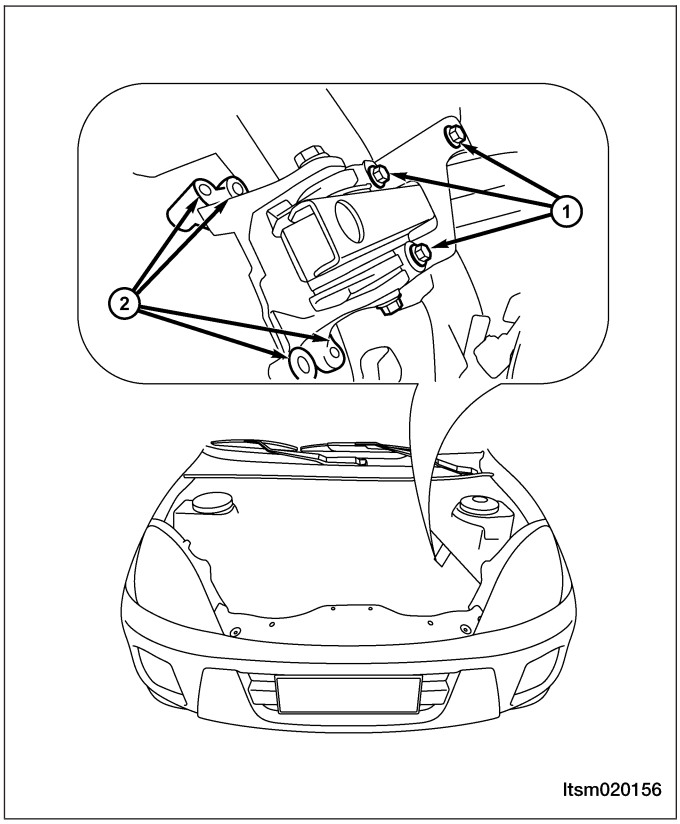

Downloaded from www.Manualslib.com manuals search engine

Removal & Installation - Right Mount

NOTE :
The following special tools are required to perform the repair procedure:
- Engine Hoist

1. Disconnect the negative battery cable.
2. Support the engine with the engine hoist.
3. Remove the engine right mount retaining bolts (2) and remove the engine right mount bracket bolts (1).
   (Tighten: Engine right mount bolts to 70 N·m)
4. Installation is in the reverse order of removal.

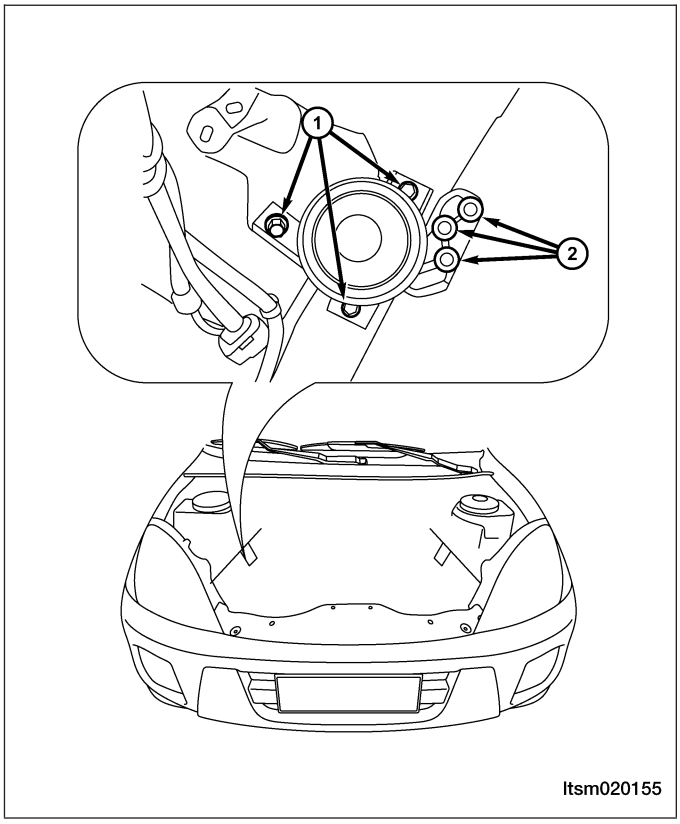

Removal & Installation - Front Mount

NOTE :
The following special tools are required to perform the repair procedure:
- Engine Hoist

1. Disconnect the negative battery cable.
2. Support the engine with the engine hoist.
3. Remove the bolts (1) securing the front engine mount.
   (Tighten: Engine front mount bolts to 60 N·m)
4. Installation is in the reverse order of removal.

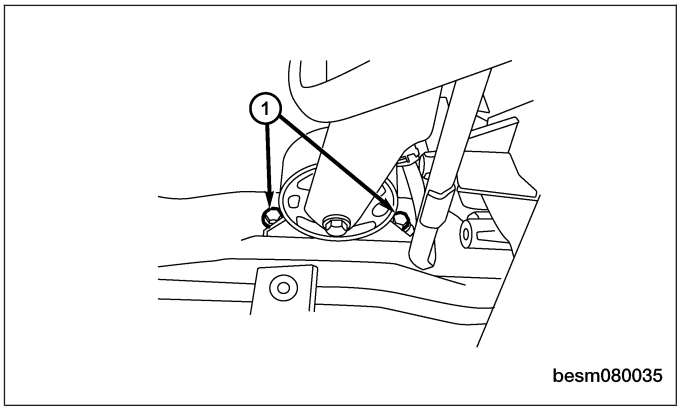

Downloaded from www.Manualslib.com manuals search engine

Removal & Installation - Rear Mount

NOTE :
The following special tools are required to perform the repair procedure:
- Engine Hoist

1. Disconnect the negative battery cable.
2. Support the engine with the engine hoist.
3. Remove the engine rear mount retaining bolts (2) and remove the engine rear mount bracket bolts (1).
   (Tighten: Engine rear mount bolts to 60 N·m)
4. Installation is in the reverse order of removal.

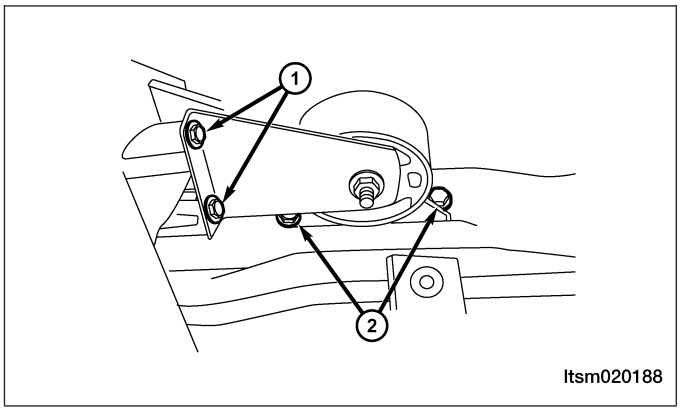

Engine Assembly

Removal & Installation

NOTE :
The following special tools are required to perform the repair procedure:
- CH-20001 - Right Engine Mount Bolt Remover
- Engine Hoist

NOTE :
The engine is removed with the transaxle as an assembly.

1. Remove the vehicle hood.
2. Remove the negative battery cable from the engine.
3. Remove the engine cover.
4. Remove the battery, battery hold downs, and battery tray (See Battery Removal & Installation in Section 05 Starting & Charging).
5. Discharge air conditioning system (See A/C System Evacuation and Recharge in Section 13 Heating & Air Conditioning).

Downloaded from www.Manualslib.com manuals search engine

6. Drain the cooling system (See Cooling System Draining and Filling in Section 06 Cooling).

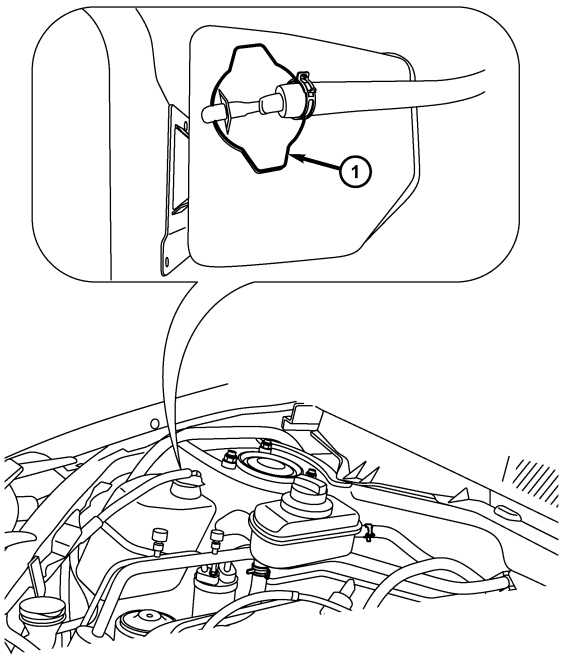

ltsm020190

WARNING!

Always allow the engine to cool before opening the cooling system. Do not loosen the coolant pressure relief cap when the engine is operating or the cooling system is hot. The cooling system is under pressure; steam and hot liquid can come out forcefully when the cap is loosened slightly. Failure to follow these instructions may result in serious personal injury.

7. Remove the coolant fan & radiator assembly (See Coolant Fan & Radiator Assembly Removal & Installation in Section 06 Cooling).
8. Remove the starter motor wiring.
9. Relieve the fuel pressure (See Fuel Pressure Relief Procedure in Section 04 Fuel Delivery).
10. Disconnect and remove the fuel line at the fuel rail.
11. Remove the air inlet hose and the air cleaner case assembly.

    NOTE: For 1.8L engine, disconnect the air flow sensor electrical connector.

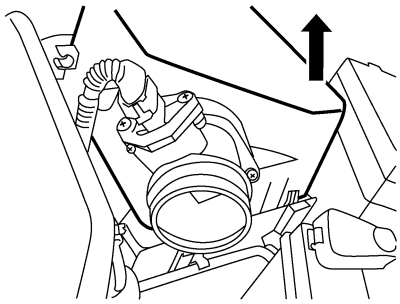

ltsm020226

12. Remove the ground cable bolt from the cylinder head.

Downloaded from www.Manualslib.com manuals search engine

13. Disconnect and remove the following electrical connectors:
    - Coolant temperature sensor
    - Camshaft position sensor
    - Ignition coil
    - Four fuel injectors
    - Intake manifold air pressure sensor (1.6L)
    - Air flow sensor (1.8L)
    - Carbon canister solenoid valve
    - Throttle body control
    - A/C compressor
    - Oil pressure sensor
    - Power steering pump pressure switch
    - Generator
14. Remove the pipe from the canister control valve (1).

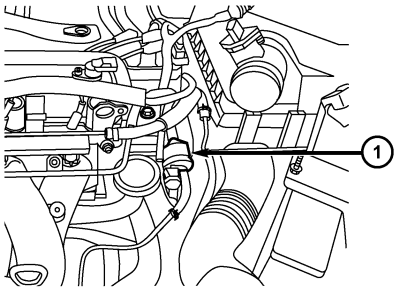

ltsm020235

15. Disconnect the heater hoses (1) on the vehicle.
16. Remove the vacuum line from the brake booster (2).
17. Remove the dipstick.

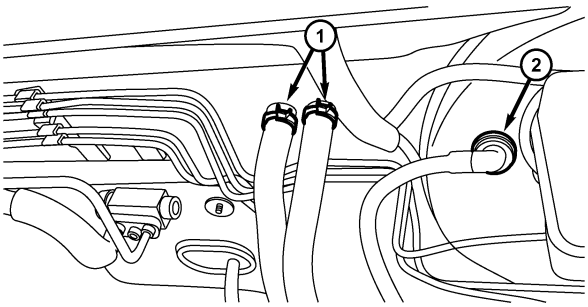

besm020025

18. If equipped with a manual transaxle remove the transaxle shift cable (1).
19. Remove the hydraulic pipe from the clutch slave cylinder.

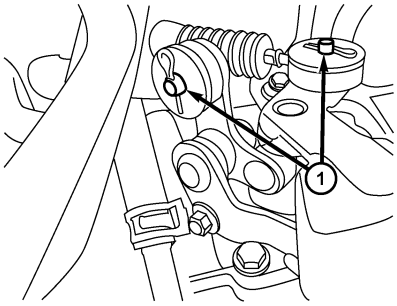

besm080051

Downloaded from www.Manualslib.com manuals search engine

20. If equipped with an automatic transaxle remove the transaxle shift cable (1) and the shift cable clamp (2).

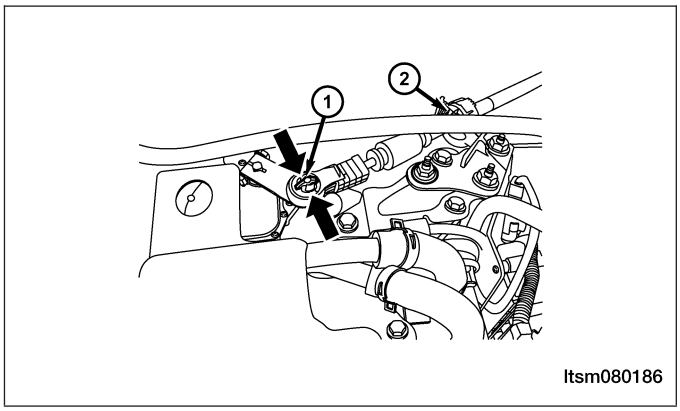

21. Remove the A/C compressor line bolt (1) from the A/C compressor.
(Tighten: A/C compressor line bolts to 20 N·m)

NOTE :
After removing the A/C lines, plug the A/C lines to prevent any debris from entering the A/C system.

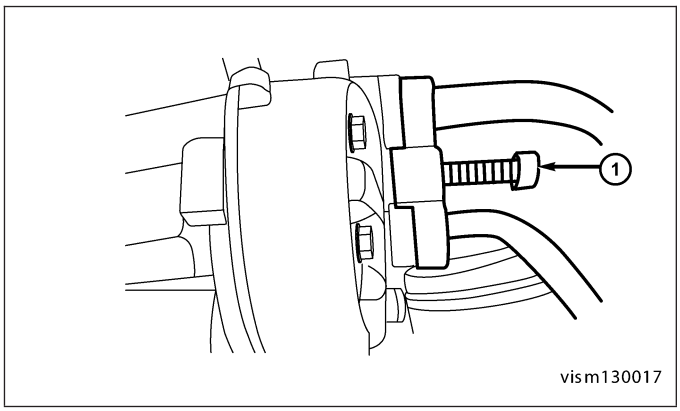

22. Remove the high pressure line (1) and low pressure line (2) from the power steering pump (drain fluid from lines).
(Tighten: High pressure line to power steering pump 40 ± 5 N·m)
(Tighten: Low pressure line to power steering pump 40 ± 5 N·m)

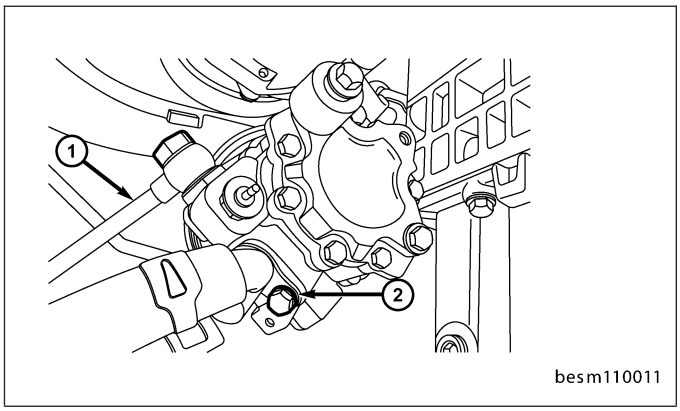

23. Remove the exhaust manifold heat shield bolts (1) and then remove heat shield.
(Tighten: Exhaust manifold heat shield bolts to 15 N·m)

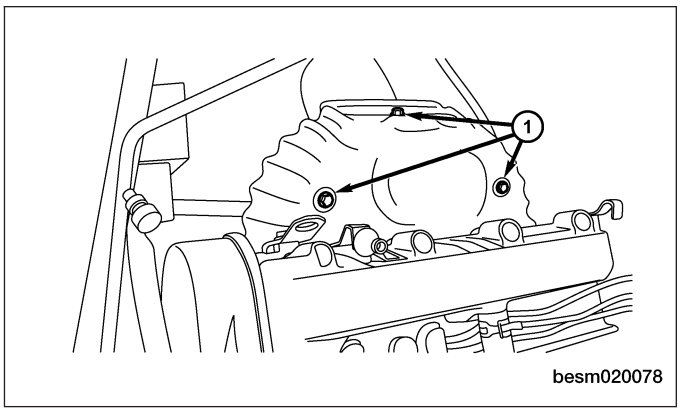

24. Disconnect the upstream and downstream oxygen sensor connectors.

Downloaded from www.Manualslib.com manuals search engine

25. Remove the catalytic converter to exhaust manifold bolts (1).

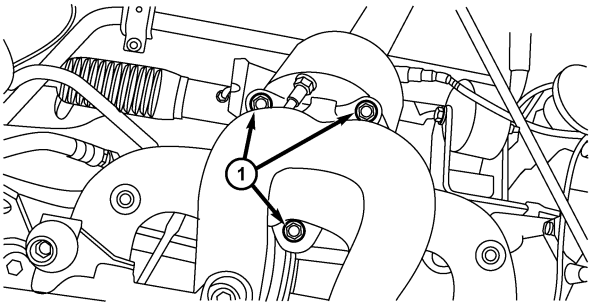

ltsm020201

26. Raise and support the vehicle.
27. Remove the front axle shaft (See Front Axle Shaft Removal & Installation in Section 09 Driveline & Axle).
28. Drain the engine oil.
29. Lower the vehicle and install engine lift chain hangers.
30. Remove the bolts (1) securing the front engine mount.
    (Tighten: Engine front mount bolt to 60 N·m)

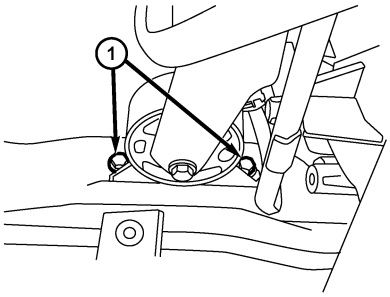

besm080035

31. Remove the bolts (1) securing the rear engine mount.
    (Tighten: Engine rear mount bolt to 60 N·m)

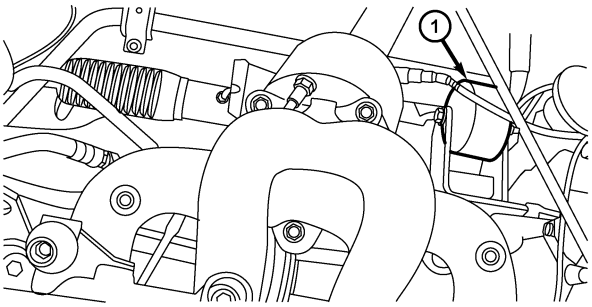

ltsm020207

Downloaded from www.Manualslib.com manuals search engine

32. Remove the left transaxle mount bolts (2) and the transaxle mount bracket retaining bolts (1).
(Tighten: Left transaxle mount bolt to 70 N·m)

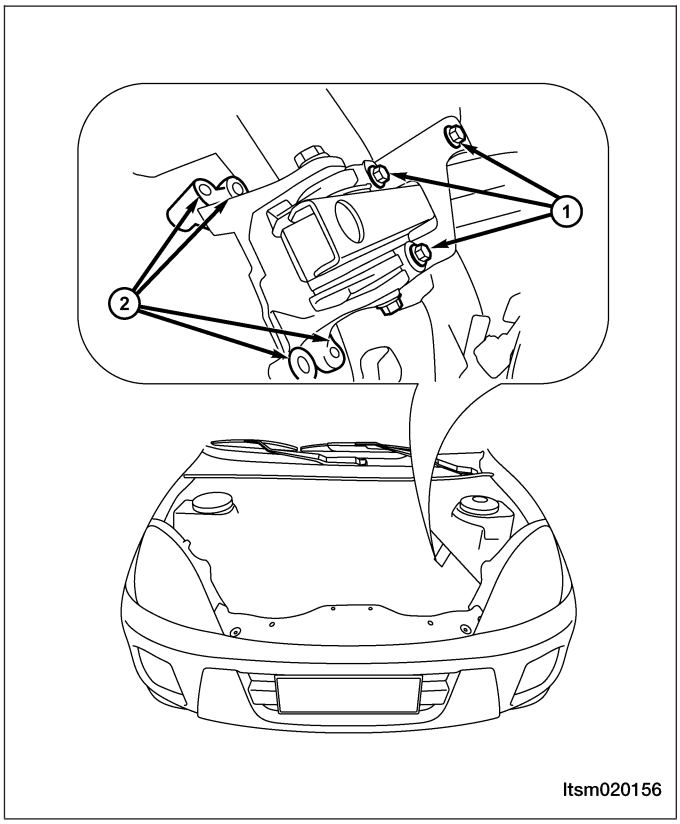

33. Using special tool CH-20001 (2), remove the three bolts (1) securing the right engine mount.
(Tighten: Engine right mount bolt to 70 N·m)

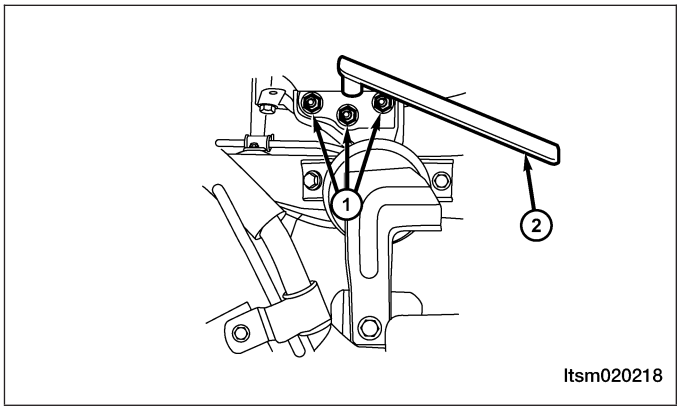

34. Verify all components between the engine and vehicle are disconnected.
35. Remove the front sub-frame (See Front Sub-Frame Removal & Installation in Section 10 Suspension).
36. Hoist the engine from vehicle.

CAUTION:
Verify all electrical connectors are disconnected prior to engine/transaxle removal.

37. Separate engine and transaxle.

Downloaded from www.Manualslib.com manuals search engine

38. Remove the accessory drive belt (1) (See Accessory Drive Belt Removal & Installation in Section 02 Engine).

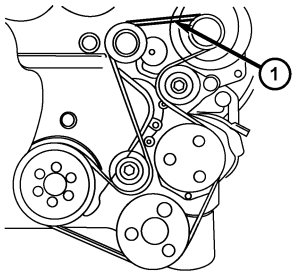

ltsm020200

39. Remove the generator (1) from the bracket (See Generator Removal & Installation in Section 05 Starting & Charging).
40. Remove the A/C compressor pipe.
41. Remove the A/C compressor (2) (See A/C Compressor Removal & Installation in Section 13 Heating & Air Conditioning).

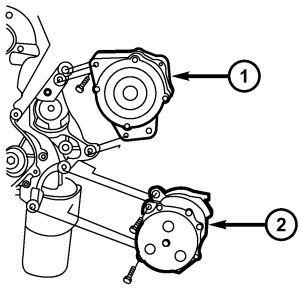

besm020029

42. Remove the power steering pump (1) with piping connected and set aside with wire.

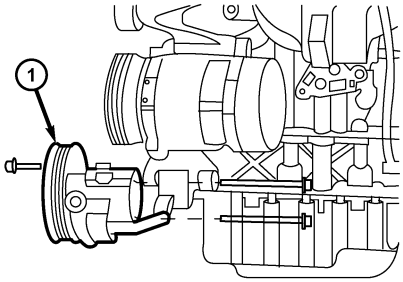

besm020028

43. Installation is in the reverse order of removal.

Downloaded from www.Manualslib.com manuals search engine

Engine Timing Belt

Removal & Installation

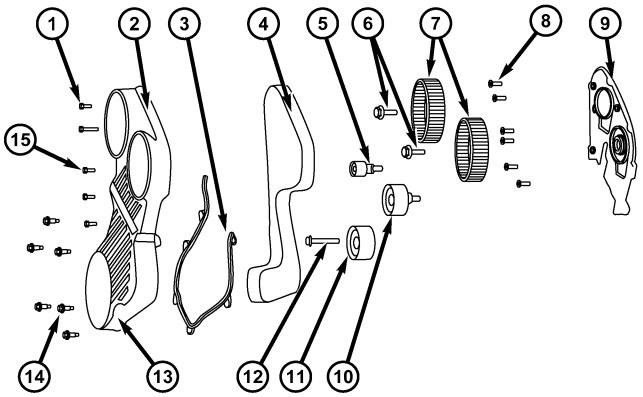

ltsm020162

1 - Timing Belt Upper Cover Bolt	9 - Rear Timing Cover
2 - Timing Belt Upper Cover	10 - Idler Pulley
3 - Timing Belt Cover Gasket	11 - Tensioner Pulley
4 - Timing Belt	12 - Tensioner Pulley Bolt
5 - Timing Belt Touch Pulley	13 - Timing Belt Lower Cover
6 - Camshaft Bolt	14 - Timing Belt Lower Cover Bolt
7 - Camshaft	15 - Timing Belt Upper Cover Bolt
8 - Rear Timing Cover Bolt	

NOTE :
The following special tools are required to perform the repair procedure:
- CH-20001 - Right Engine Mount Bolt Remover
- CH-20003 - Crankshaft Holder
- CH-20010 - Camshaft Holder
- Engine Hoist

1. Release the coolant system pressure.

WARNING!

Always allow the engine to cool before opening the cooling system. Do not loosen the coolant pressure relief cap when the engine is operating or the cooling system is hot. The cooling system is under pressure; steam and hot liquid can come out forcefully when the cap is loosened slightly. Failure to follow these instructions may result in serious personal injury.

Downloaded from www.Manualslib.com manuals search engine

2. Remove the coolant reservoir (1) and set aside.

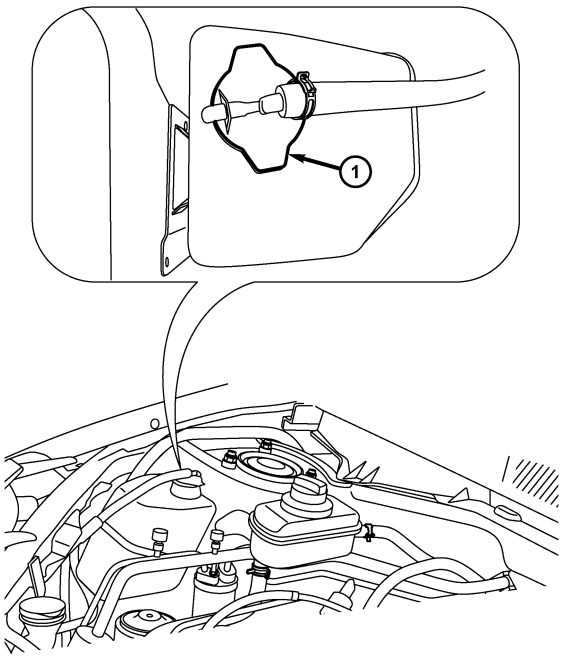

ltsm020190

3. Attach an engine hoist and support the engine using an engine hoist.
4. Using special tool CH-20001 (2), remove the engine right mount bolts (1) and bracket.
   (Tighten: Engine right mount bolts to 70 N·m)

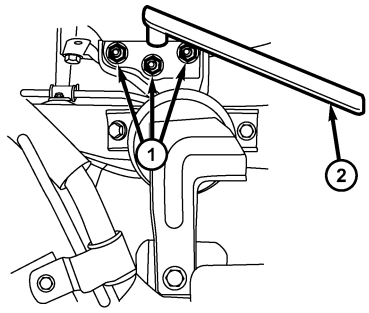

ltsm020218

5. Remove the accessory drive belt (See Accessory Drive Belt Removal & Installation in Section 02 Engine).
6. Remove the crankshaft vibration damper bolts (1).
   (Tighten: Crankshaft vibration damper bolts to 25 N·m)

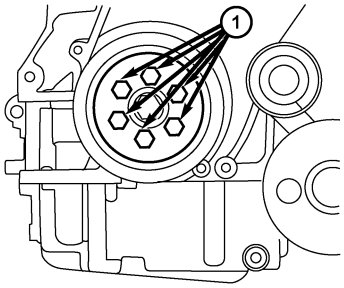

besm020055

Downloaded from www.Manualslib.com manuals search engine

7. Remove the timing belt upper cover (1) and timing belt lower cover (2).
   (Tighten: Timing belt upper cover bolts to 11 N·m)
   (Tighten: Timing belt lower cover bolts to 11 N·m)

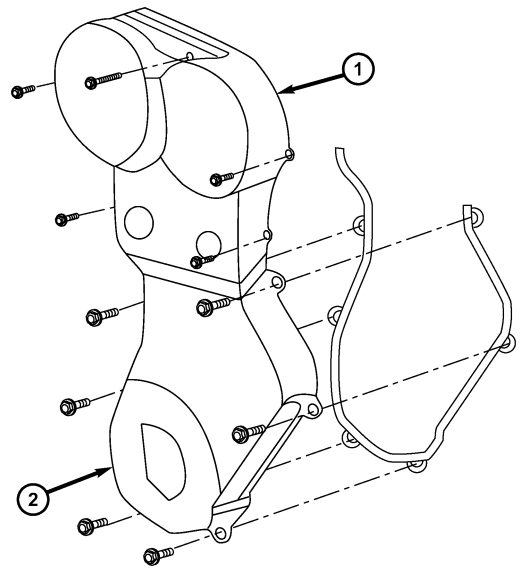

besm020020

8. Remove the cylinder head cover (See Cylinder Head Cover Removal & Installation in Section 02 Engine).
9. Remove the plug in the cylinder block.
10. Using special tool CH-20003 (1), install the crankshaft holder into the cylinder block and rotate the crankshaft until the crankshaft tool completely holds the crankshaft in place.
    (Tighten: Crankshaft holder to 28 N·m)

    NOTE: The crankshaft holder will prevent the crankshaft from rotating in either direction.

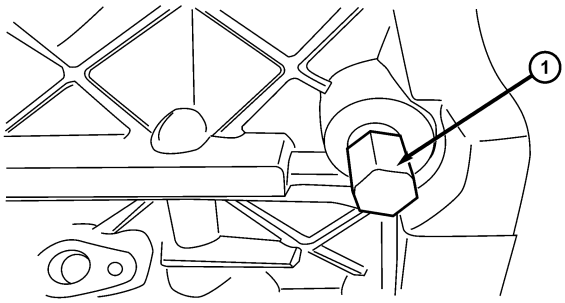

ltsm020234

11. Using special tool CH-20010 (1), install the camshaft holder to hold the camshafts in place.

    NOTE: The camshaft holder will prevent the camshafts from rotating in either direction.

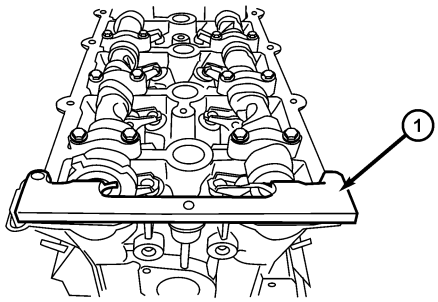

besm020016

CAUTION: Rotating the camshafts or crankshaft with timing components loosened or removed can cause serious damage to the valves or pistons.

Downloaded from www.Manualslib.com manuals search engine

12. Loosen the bolt of the timing belt tensioner pulley (1), remove the pulley.
    (Tighten: Timing belt tensioner pulley bolt to 30 N·m)
13. Remove the timing belt (3).
14. Installation is in the reverse order of removal.

Installation Notes:

- Install the timing belt and rotate the tensioner pulley with an Allen wrench in order to apply tension to the belt and align the finger pointer of the tensioner to the middle of the U-slot opening. Tighten the tensioner pulley bolt (1) to 30 N·m, then tighten the intake and exhaust camshaft pulley bolts (2 & 4) to 120 N·m.

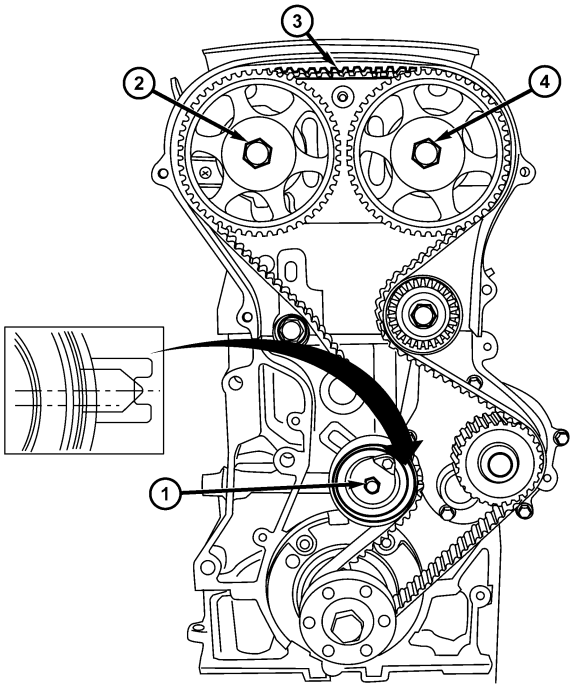

pzsm020037

Exhaust Manifold

Removal & Installation

1. Remove the engine cover.
2. Remove the bolts (1) attaching the exhaust manifold heat shield.
   (Tighten: Exhaust manifold heat shield bolts to 15 N·m)
3. Remove the exhaust manifold heat shield.

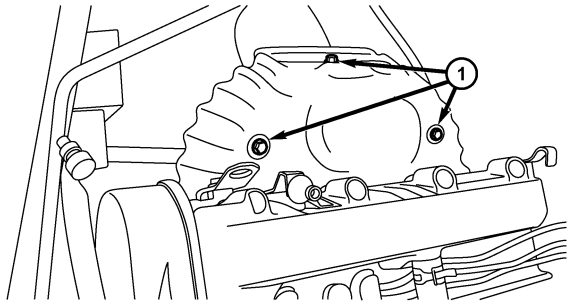

besm020078

Downloaded from www.Manualslib.com manuals search engine

4. Remove the three bolts (1) securing the exhaust manifold to the catalytic converter assembly.
5. Disconnect the catalytic converter assembly from the manifold.

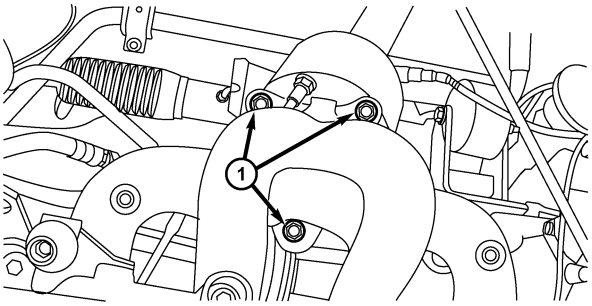

ltsm020201

6. Remove the exhaust manifold nuts (1).
(Tighten: Exhaust manifold nuts to 25 N·m)

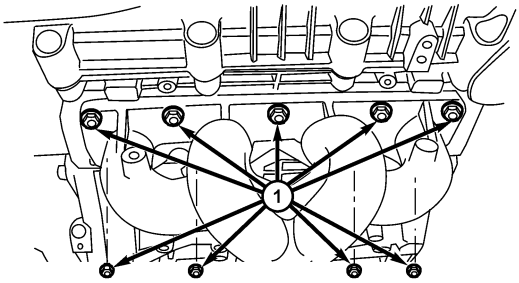

besm020033

7. Remove the exhaust manifold.
8. Remove and discard manifold gasket (1).

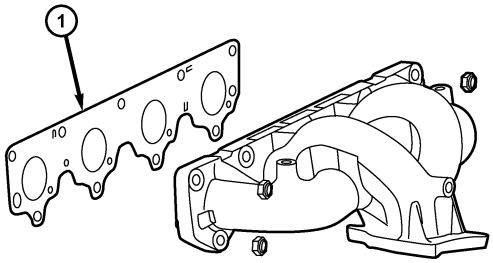

ltsm020169

9. Installation is in the reverse order of removal.

Downloaded from www.Manualslib.com manuals search engine

Installation Notes:

- Clean all surfaces of manifold and cylinder head.
- Install a new exhaust manifold gasket during installation.

Intake Manifold

Removal & Installation

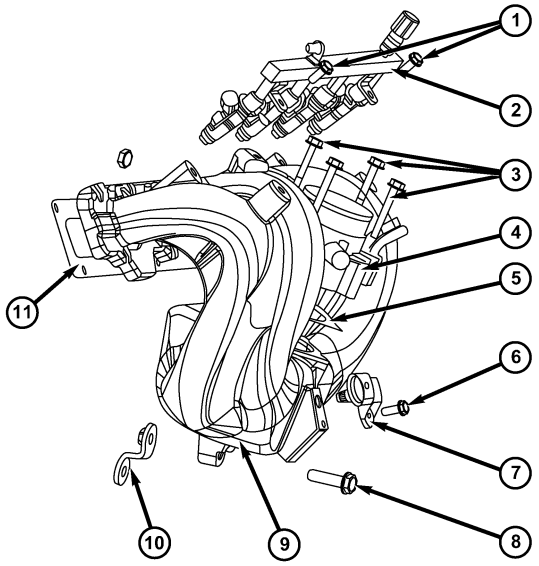

ltsm020164

1 - Fuel Rail Bolt	7 - Air Intake Pressure Temperature Sensor
2 - Fuel Rail	8 - Intake Manifold Bolt
3 - Electronic Throttle Control Actuator Bolt	9 - Intake Manifold
4 - Electronic Throttle Control Actuator	10 - Intake Manifold Bracket
5 - Electronic Throttle Control Actuator Gasket	11 - Intake Manifold Gasket
6 - Air Intake Pressure Temperature Sensor Bolt	

1. Disconnect the negative battery cable.
2. Remove the engine cover.
3. Drain the cooling system (See Cooling System Draining and Filling in Section 06 Cooling).

WARNING!

Always allow the engine to cool before opening the cooling system. Do not loosen the coolant pressure relief cap when the engine is operating or the cooling system is hot. The cooling system is under pressure; steam and hot liquid can come out forcefully when the cap is loosened slightly. Failure to follow these instructions may result in serious personal injury.

Downloaded from www.Manualslib.com manuals search engine

4. Disconnect the four fuel injector electrical connectors (1).
5. Disconnect the throttle body control electrical connector (2).

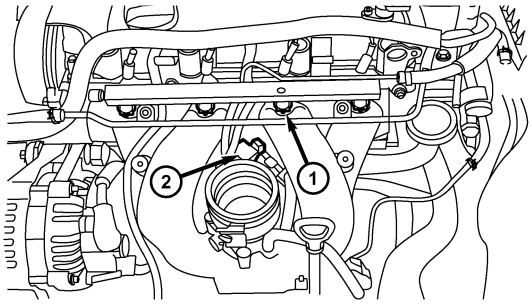

ltsm020221

6. Disconnect the air flow sensor electrical connector (1).

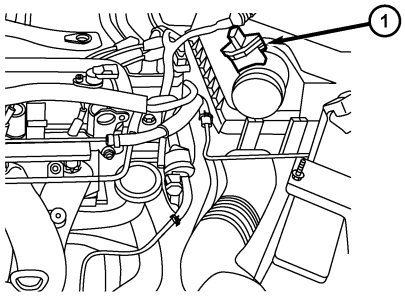

ltsm020204

7. Loosen the clamp between the air intake hose and the air cleaner.
8. Loosen the clamp between the air intake hose and the throttle body and then remove the intake pipe.
9. Loosen the clamp on the PCV hose and then disconnect the PCV hose.
10. Remove the fuel rail bracket bolts (1).
    (Tighten: Fuel rail bracket bolts to 11 N·m)

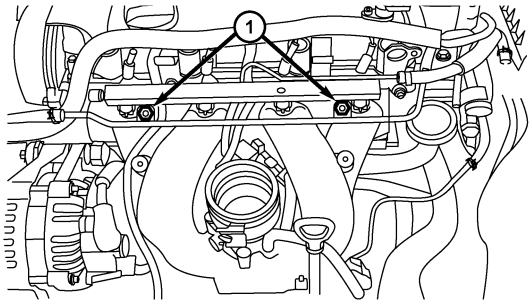

ltsm020222

11. Remove the fuel rail with the fuel injectors and set aside.
12. Remove the fuel injector O-rings.

NOTE :
Install new O-rings on the fuel injectors.

13. Remove the screws securing the vacuum valve bracket to the intake manifold.
14. Set aside the vacuum valve and pipe.
15. Disconnect intake manifold electrical harness, and vacuum hose.

Downloaded from www.Manualslib.com manuals search engine

16. Remove the bolts (2) & (3) securing the engine oil dipstick to intake manifold. Remove the dipstick. (Tighten: Dipstick bracket bolts to 11 N·m)
17. Disconnect the oil pressure switch connector (4).
18. Remove the nuts (1) securing the intake manifold to cylinder head.
    (Tighten: Intake manifold nuts to 11 N·m)
    NOTE: Replace the manifold gasket.

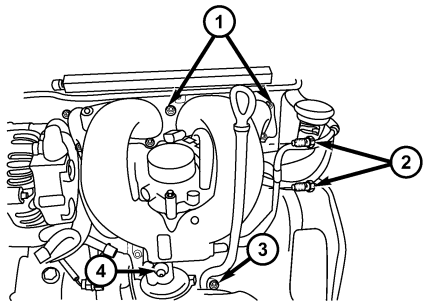

ltsm020223

19. Installation is in the reverse order of removal.

Installation Notes:

- Clean all surfaces of manifold and cylinder head.
- Install a new intake manifold gasket during installation.
- Install new O-rings on the fuel injectors.

Idler Pulley

Removal & Installation

1. While using a suitable tool and securely holding the hexagonal portion of the drive belt tensioner, rotate the pulley counterclockwise to loosen the drive belt.

WARNING!
Avoid placing hands near the drive belt tensioner while it is being held.

2. Remove the drive belt.

Upper Accessory Drive Belt Idler Pulley (1)

- Remove the bolt and the upper accessory drive belt idler pulley.

(Tighten: Upper idler pulley bolt to 45 N·m)

Lower Accessory Drive Belt Idler Pulley (2)

- Remove the bolt and the lower accessory drive belt idler pulley.

(Tighten: Lower idler pulley bolt to 45 N·m)

3. Installation is in the reverse order of removal.

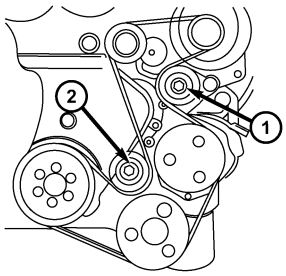

ltsm020203

Oil Filter

Removal & Installation

NOTE :
The following special tools are required to perform the repair procedure:
- CH-10003 - Oil Filter Remover

CAUTION:
When servicing the oil filter, avoid deforming the filter by installing the special tool against the base of the filter.

Downloaded from www.Manualslib.com manuals search engine

WARNING!

Prolonged and repeated contact with engine oil will harm your skin. If engine oil is spilled on your skin, wash it off immediately with water. In addition, used engine oil contains potentially harmful contaminants which may cause skin cancer. Always use adequate skin protection when performing vehicle service.

1. Using special tool CH-10003 oil filter remover, remove the oil filter (1).
   (Tighten: Oil filter to 25 N·m)
   CAUTION: When removing the oil filter, ensure that the oil filter gasket is not stuck to the engine. The oil filter gasket must be removed from the engine before installing the new oil filter.

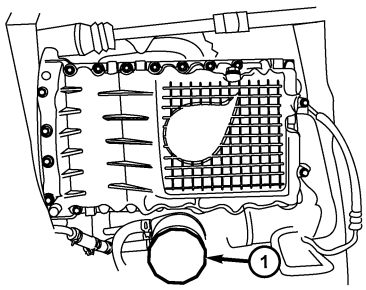

ltsm020206

2. Installation is in the reverse order of removal.

Installation Notes:

- Clean all surfaces, and verify the oil filter does not leak.

Oil Pan

Removal & Installation

1. Remove the oil dipstick.
2. Raise and support the vehicle.
3. Remove the oil pan drain plug and drain the engine oil.
   (Tighten: Oil pan drain plug to 40 N·m)

NOTE :
Do not pry on cylinder block to remove oil pan.

4. Remove oil pan bolts (1).
   (Tighten: Oil pan bolts to 18 N·m)

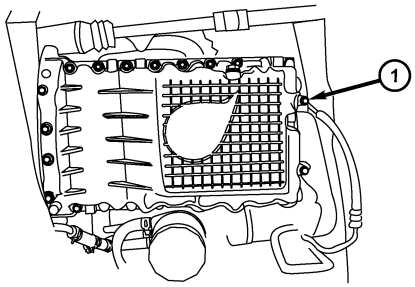

ltsm020205

5. Using a putty knife, loosen seal around oil pan.
6. Remove the oil pan.
7. Installation is in the reverse order of removal.

Downloaded from www.Manualslib.com manuals search engine

Installation Notes:

- Oil pan sealing surfaces must be free of grease or oil.
- Install the four oil pan corner bolts in the sequence shown (1-2-3-4).
- Install the remaining oil pan bolts.
- Torque all the oil pan bolts to the proper specification.

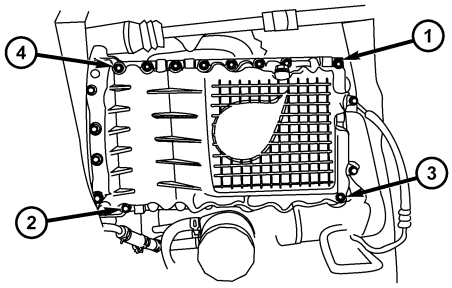

vism020013

Oil Pump

Removal & Installation

1. Remove the accessory drive belt (See Accessory Drive Belt Removal & Installation in Section 02 Engine).
2. Remove the crankshaft vibration damper retaining bolt (1).
   (Tighten: Crankshaft vibration damper bolts to 25 N·m)

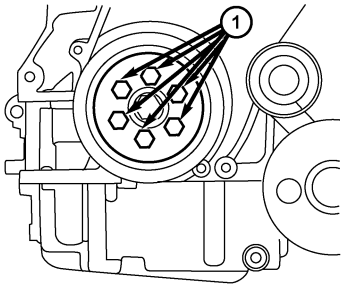

besm020055

3. Remove the engine timing belt (See Engine Timing Belt Removal & Installation in Section 02 Engine).
4. Remove the crankshaft timing belt pulley bolt (2) from the crankshaft.
   (Tighten: Crankshaft timing belt pulley bolt to 130 N·m and an additional 65°)
5. Remove the key-way from the crankshaft.
6. Using an appropriate tool, remove the front crankshaft oil seal (1).

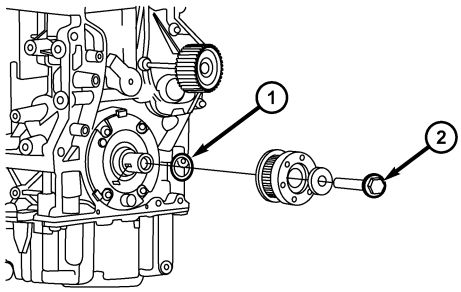

ltsm020199

Downloaded from www.Manualslib.com manuals search engine

7. Remove the four oil pump bolts (1).
   (Tighten: Oil pump bolts to 11 N·m)
8. Remove the oil pump (2) using a suitable tool.
9. Remove the oil pump gasket (3).

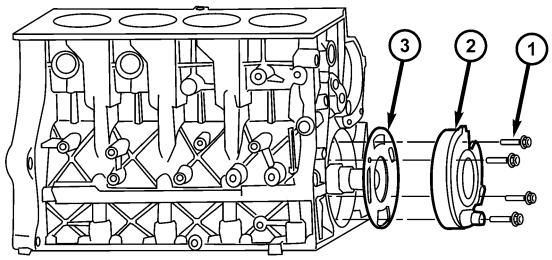

besm020032

10. Installation is in the reverse order of removal.

Installation Notes:

- Before installing, prime the new oil pump. Fill the oil pump with engine oil and rotate the oil pump.
- Replace the oil pump gasket.

Oil Strainer

Removal & Installation

1. Raise and support the vehicle.
2. Remove the oil pan (See Oil Pan Removal & Installation in Section 02 Engine).
3. Remove the oil strainer retaining bolts (1).
   (Tighten: Oil strainer bolts to 18 N·m)

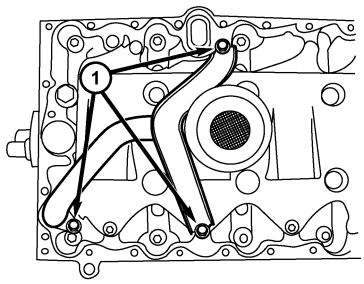

besm020018

4. Carefully remove the oil strainer.
5. Installation is in the reverse order of removal.

Installation Notes:

- Install new O-rings on the oil strainer pipe.

Downloaded from www.Manualslib.com manuals search engine

ENGINE UNIT REPAIR

Engine Block

Specifications

Torque Specifications

DESCRIPTION	TORQUE (N·m)
Connecting Rod Cap Bolts	1st Step: Tighten the bolt to 25 N·m 2nd Step: Tighten the bolt an additional 90°
Main Bearing Cap Bolts	1st Step: Tighten the bolt to 45 N·m 2nd Step: Tighten the bolt an additional 180°
Lower Cylinder Block Bolts	23

Clearance Specifications

DESCRIPTION	SPECIFICATION (mm)
Surface Distortion Limit	0.15
Inner Diameter Standard	84
Out-Of-Round	< 0.008
Taper	< 0.01

Disassembly

1. Remove the oil pan and then remove oil baffle.
2. Remove the oil strainer.

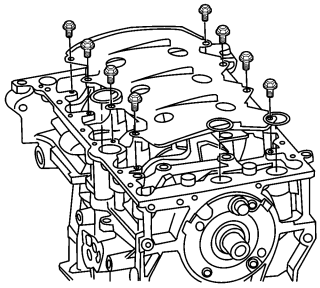

besm020060

3. For each connecting rod/piston assembly to be removed, rotate the crankshaft to the bottom dead center position for each cylinder.

NOTE :
Before removing the connecting rod/piston assembly, check the connecting rod side clearance.

Downloaded from www.Manualslib.com manuals search engine

4. Remove the connecting rod retaining bolts.

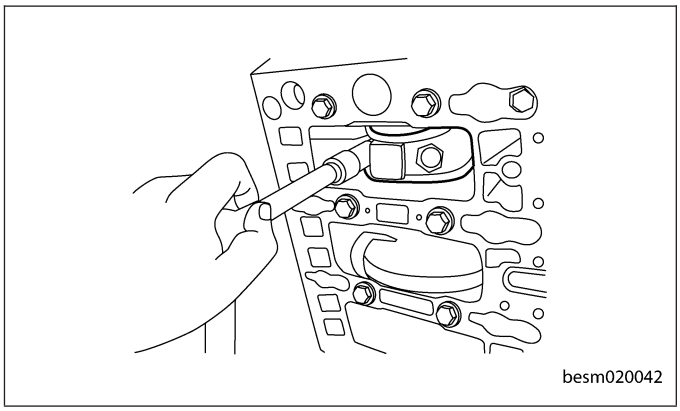
besm020042

5. Remove the connecting rod bearing cap.

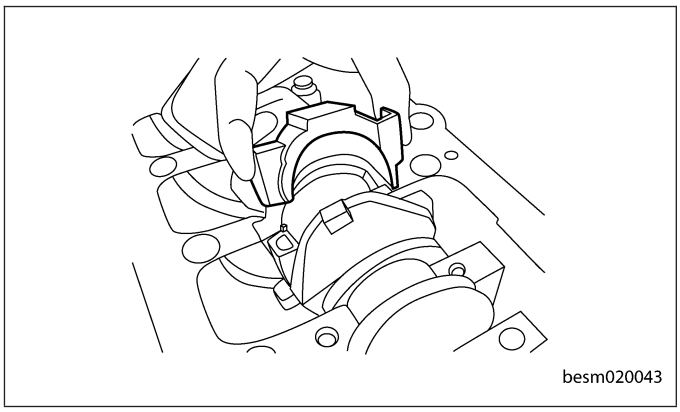
besm020043

6. Using a hammer handle or similar tool, push the connecting rod/piston assembly (1) out through the top of the cylinder block.

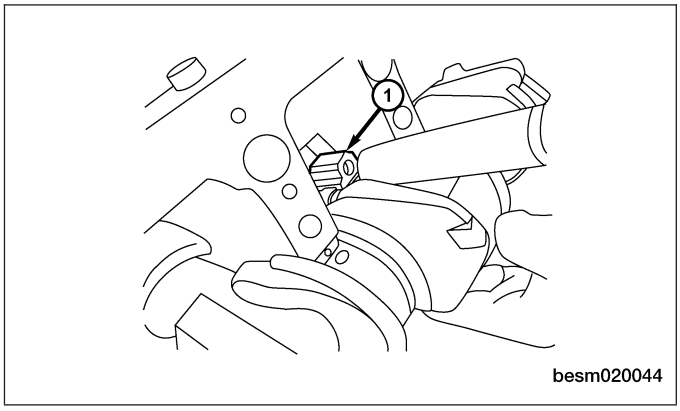

besm020044

7. Remove the connecting rod bearings (See Connecting Rod Removal & Installation in Section 02 Engine).
   CAUTION: When removing the connecting rod side bearings, note the installation position. Keep them in the correct order.

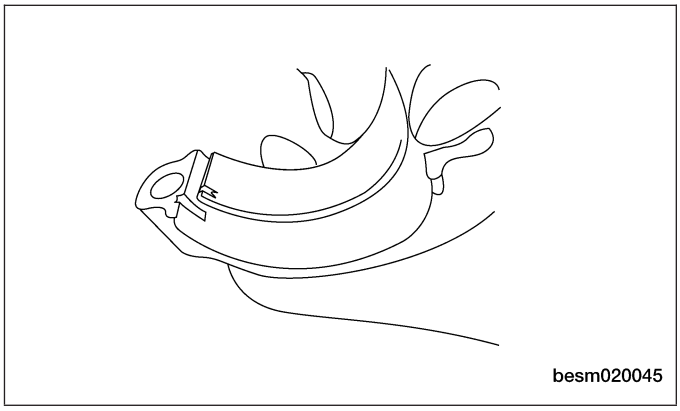
besm020045

8. Installation is in the reverse order of removal.

Downloaded from www.Manualslib.com manuals search engine

Inspection

NOTE :
All measurements should be taken with the engine block at room temperature, 21°C.

Engine Block

- Clean cylinder block thoroughly and check all core hole plugs for evidence of leaking.
- Examine block and cylinder bores for cracks or fractures.
- Check block deck surfaces for flatness. Deck surface must be within service limit of 0.050 mm.

Cylinder Bore

- The cylinder walls should be checked for out-of-round and taper with cylinder indicator or equivalent. If the cylinder walls are badly scuffed or scored, the cylinder block should be replaced, and new pistons and rings fitted.
- Measure the cylinder bore at three levels in directions X and Y. Top measurement should be 10 mm down and bottom measurement should be 10 mm up from bottom of bore.

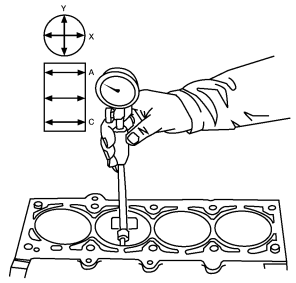

besm020063

CYLINDER BORE	
All Cylinders	83.500 - 83.510 mm

Assembly

NOTE :
Cleanliness is extremely important during the engine assembly procedure. Any foreign material, including any material created while cleaning gasket surfaces, that enters the oil passages, coolant passages or the oil pan can cause engine failure.

NOTE :
Assemble all components in their original position.

1. Install the pistons to the connecting rods.
2. Using a piston ring expander, install the piston rings.
3. Assemble all components in the reverse order of disassembly.

Downloaded from www.Manualslib.com manuals search engine

Pistons

Specifications

Clearance Specifications - Pistons

DESCRIPTION	SPECIFICATION (mm)
Surface Distortion Limit	0.15
Inner Diameter Standard	84
Out-Of-Round	< 0.008
Taper	< 0.01

Clearance Specifications - Piston Ring Groove

DESCRIPTION	SPECIFICATION (mm)
First Ring	0.04 - 0.08
Second Ring	0.01 - 0.0251

Clearance Specifications - Piston Ring End Gap

DESCRIPTION	SPECIFICATION	LIMIT
First Ring End Gap	0.2 - 0.4 mm	0.8 mm
Second Ring End Gap	0.4 - 0.6 mm	1.0 mm

Clearance Specifications - Piston to Piston Pin

DESCRIPTION	SPECIFICATION (mm)
Piston To Piston Pin	0.002 - 0.013

Downloaded from www.Manualslib.com manuals search engine

Disassembly

- Piston Ring Removal
  - Using a suitable ring expander, remove upper and intermediate piston rings.
  - Remove the upper oil ring side rail, lower oil ring side rail and then oil ring expander from piston.
  - Clean ring grooves of any carbon deposits.

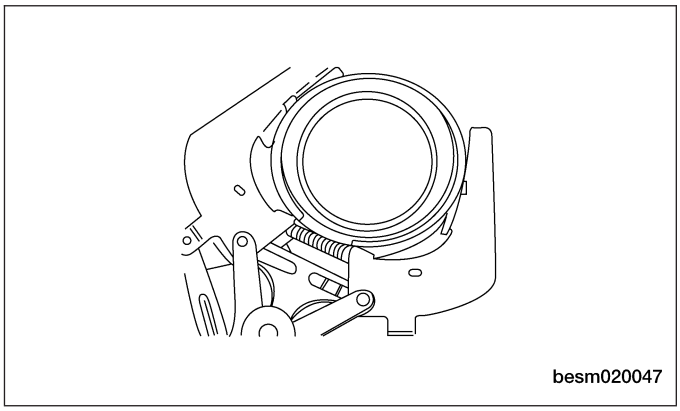
besm020047

CAUTION:
Before removing the piston rings (1), check the piston ring side clearance. Be careful to mark the location of the piston rings if they are to be reused.

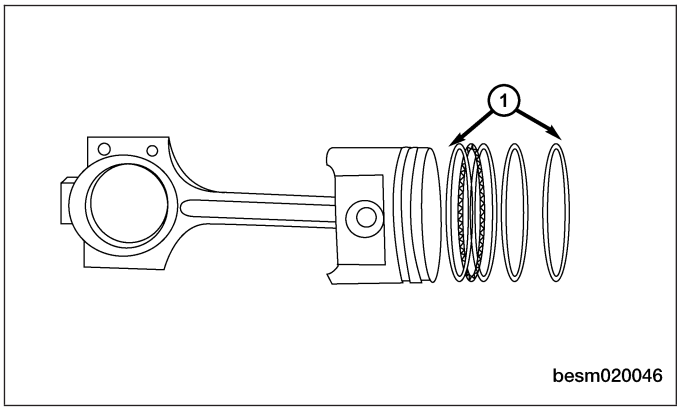

besm020046

- Piston Pin Snap Ring Removal
  - Using snap ring pliers, remove the snap ring (1).
  - Heat the pistons if necessary.

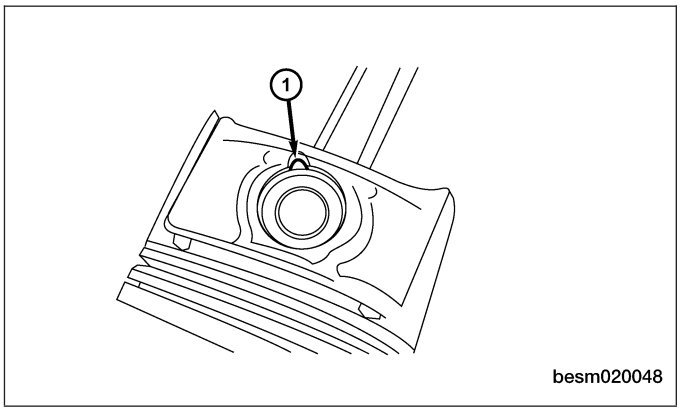

besm020048

Downloaded from www.Manualslib.com manuals search engine

- Piston Pin Removal
  - Push out the piston pin with a suitable tool.

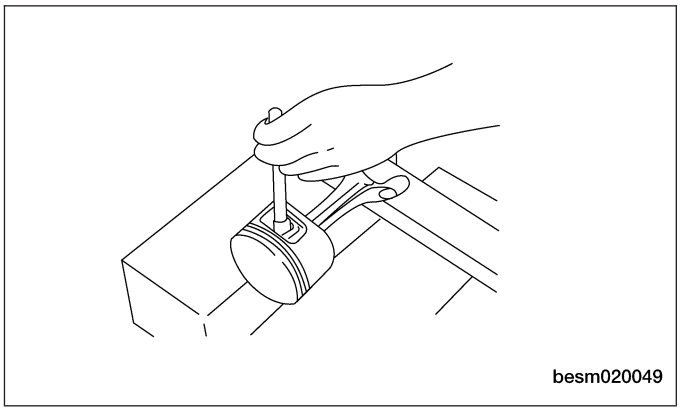
besm020049

- Connecting Rod & Piston Disassembly
  - Remove the piston from the connecting rod.

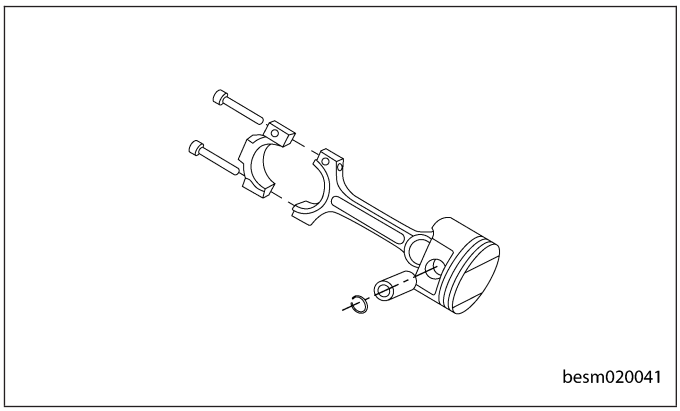
besm020041

Inspection

- Check the piston diameter.

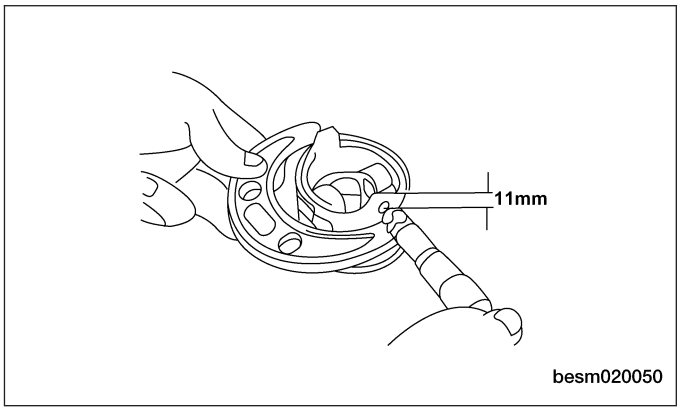

besm020050

PISTON DIAMETER	
All Pistons	83.451 - 83.469 mm

Downloaded from www.Manualslib.com manuals search engine

- Check the inner diameter of each cylinder bore (See Cylinder Bore Inspection in Section 02 Engine).

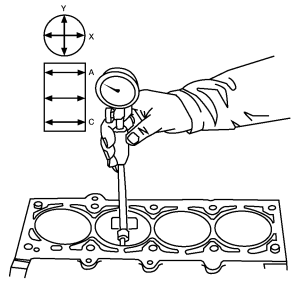

besm020063

CYLINDER BORE	
All Cylinders	83.500 - 83.510 mm

- Check piston ring to groove side clearance.
  - Clean the ring slot using a suitable tool.
  - Measure piston ring to groove side clearance.

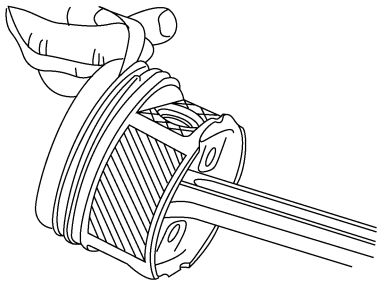

besm020051

RING GROOVE CLEARANCE	
First Ring	0.04 - 0.08 mm
Second Ring	0.01 - 0.0251 mm

- Wipe the cylinder bore clean. Insert ring and push down with piston to ensure it is square in the bore. The ring gap measurement must be made with the ring positioned at least 13 mm from bottom of cylinder bore and below the bottom of the oil ring travel where the cylinder bore has minimal wear. Check gap with feeler gauge.

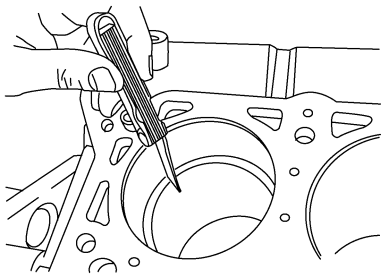

besm020052

Downloaded from www.Manualslib.com manuals search engine

RING END GAP CLEARANCE		
First Ring	0.2 - 0.4 mm	0.8 mm
Second Ring	0.4 - 0.6 mm	1.0 mm

- Check the diameter of the piston pin bore.
- Check the outer diameter of the piston pin.

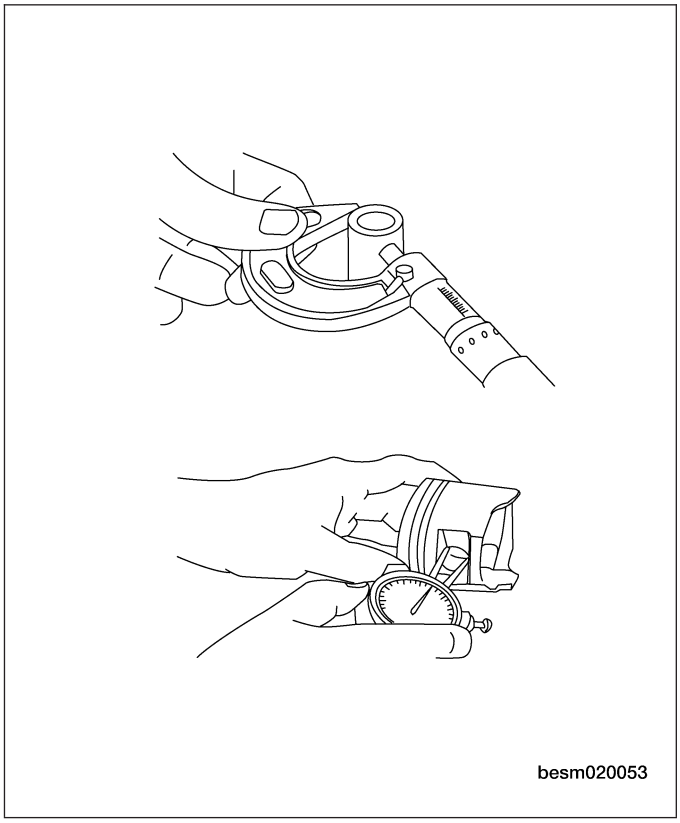

- Check the inner diameter of connecting rod (small end).

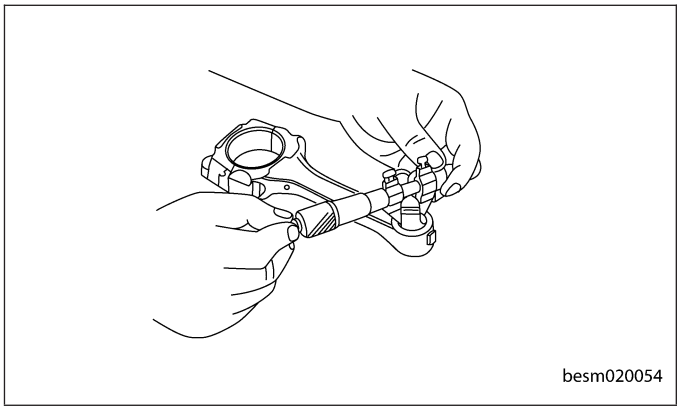

PISTON PIN CLEARANCE	
Piston and Piston Pin	0.002 - 0.013 mm

Assembly

1. Install the piston to the connecting rod. Assemble the components in their original positions.
2. Using a piston ring expander, install the piston rings. Assemble the components in their original positions.
3. Assemble all components in the reverse order of disassembly.

Downloaded from www.Manualslib.com manuals search engine

Connecting Rods

Specifications

Torque Specifications

DESCRIPTION	TORQUE (N·m)
Connecting Rod Bolts	1st Step: Tighten bolts to 25 N·m 2nd Step: Tighten the connecting rod bolts an additional 90°

Clearance Specifications

DESCRIPTION	SPECIFICATION (mm)
Connecting Rod Radial Clearance	0.016 - 0.051
Connecting Rod Axial Clearance	0.002 - 0.013

Disassembly

1. Remove the connecting rod cap bolts.
2. Remove the connecting rod bearing cap.

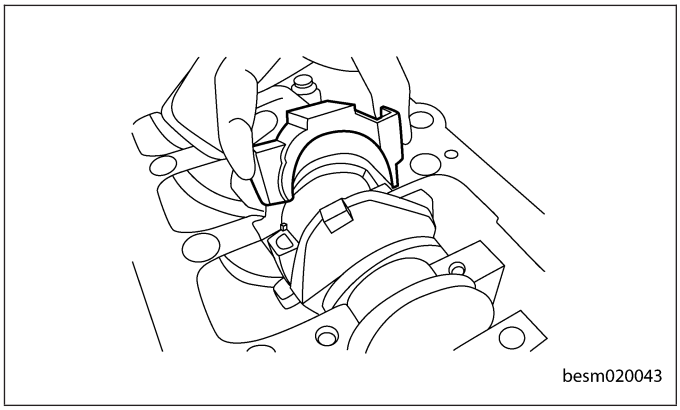
besm020043

3. Using a hammer handle or similar tool, push the piston and connecting rod assembly (1) out through the cylinder head side of the engine block.

   NOTE: Before removing the piston and connecting rod assembly, check the connecting rod side clearance.

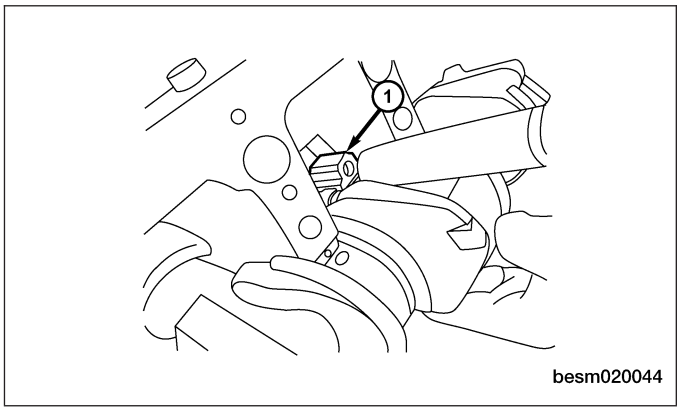

besm020044

Downloaded from www.Manualslib.com manuals search engine

4. Remove the connecting rod bearings.
   CAUTION: When removing the connecting rod side bearings, note the installation position. Keep them in the correct order.

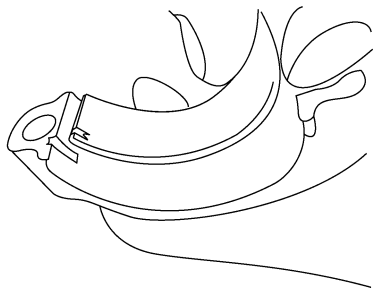

besm020045

Inspection

- Check the radial clearance of connecting rod bearing.

CONNECTING ROD RADIAL CLEARANCE	
Radial Clearance	0.016 - 0.051 mm

Assembly

NOTE :
The rod bolts should not be reused.

1. Before installing the NEW rod bolts, the threads and under the bolt head should be oiled with clean engine oil.
2. Install each bolt finger tight, then alternately tighten each bolt to assemble the cap properly.
3. Tighten the connecting rod bolts using the two step torque-turn method:
   - 1st Step: Tighten bolts to 25 N·m
   - 2nd Step: Tighten the connecting rod bolts an additional 90°

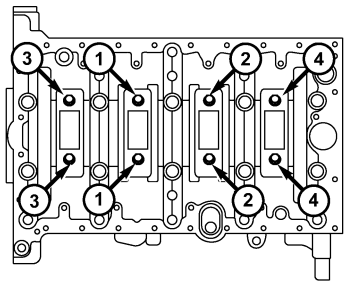

ltsm020208

4. Using a feeler gauge check connecting rod side clearance.
   - Check axial clearance of connecting rod.

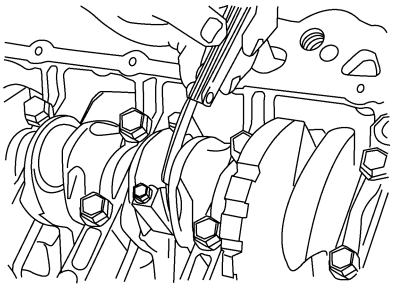

besm020064

Downloaded from www.Manualslib.com manuals search engine

Crankshaft

Specifications

Torque Specifications

DESCRIPTION	TORQUE (N·m)
Main Bearing Cap Bolts	1st Step: Tighten the bolt to 45 N·m 2nd Step: Tighten the bolt an additional 180°
Lower Cylinder Block Bolts	23

Clearance Specifications

DESCRIPTION	SPECIFICATION (mm)
Diameter of Crankshaft Main Journals	53.981 - 54
Diameter of Crankshaft Rod Journals	47.884 - 47.9
Out-of-Round Maximum of Crankshaft Main Journals	0.008
Axial Clearance of Crankshaft	0.07 - 0.265
Radial Clearance of Crankshaft	0.0035 - 0.034
Coaxality of Crankshaft Main Journals	0.05
Thrust Washer Thickness	2.4 - 2.405

Disassembly

1. Remove the front crankshaft oil seal (See Front Crankshaft Oil Seal Removal & Installation in Section 02 Engine).
2. Remove the rear crankshaft oil seal (See Rear Crankshaft Oil Seal Removal & Installation in Section 02 Engine).
3. Remove the pistons with connecting rod assemblies.
4. Remove the lower cylinder block bolts in the sequence shown.

   NOTE: Before loosening the lower cylinder block bolts, measure the crankshaft side clearance.

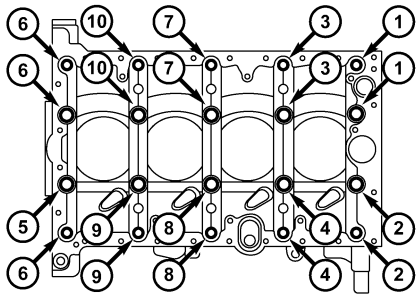

besm020074

5. Remove the lower cylinder block.
6. Remove the crankshaft.
7. Remove the main bearings and thrust bearings from the cylinder block and lower cylinder block.

   NOTE: If reusing the bearings, identify and number the bearings so that they are assembled in the same position and direction.

Downloaded from www.Manualslib.com manuals search engine

Inspection

- The crankshaft main journals should be checked for excessive wear, roundness and scoring. Limits of roundness on any crankshaft main journals should be held to 0.008 mm. Limits of roundness on any crankshaft rod journals should be held to 0.005 mm. DO NOT nick crank pin or bearing fillets. Limits of out of round on any crankshaft journals should be held to 0.005 mm.

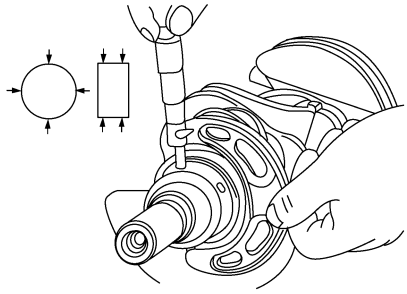

besm020075

- Check the axial clearance after installation. Standard of axial clearance should be 0.07 mm. Limits of axial clearance should be held to 0.265 mm.

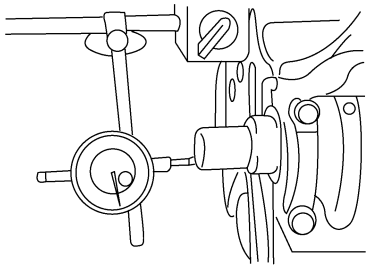

besm020076

- Oil Clearance of crankshaft main journal
  - Clean the journal and bearing.
  - Install the crankshaft.
  - Cut the plastic-gauge to the same width as the bearing, and then put it onto the crankshaft journal to make it parallel with the central line of the crankshaft.
  - Install the main bearing cap carefully, and tighten the bolts to the specified torque.
  - Remove the main bearing cap.
  - Measure the oil clearance with the plastic-gauge.

Standard oil clearance of crankshaft main journal should be 0.022 mm. Limits of oil clearance of crankshaft main journal should be 0.058 mm.

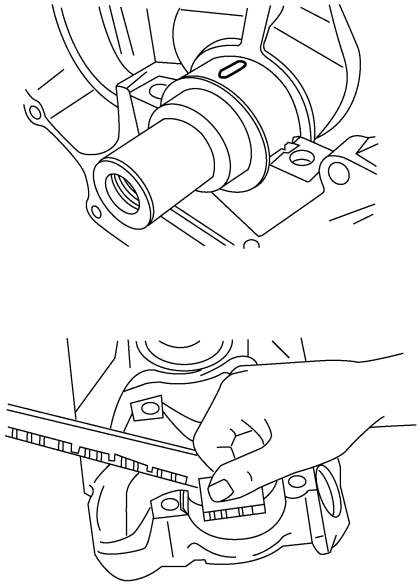

besm020077

Downloaded from www.Manualslib.com manuals search engine

Assembly

1. Install the main bearings and thrust bearings to the upper cylinder block and lower cylinder block.
   NOTE: Identify and number the bearings, if reusing them, so that they are assembled in the same position and direction.
2. Assemble the crankshaft and main bearings in the reverse order of disassembly.

Downloaded from www.Manualslib.com manuals search engine

CYLINDER HEAD UNIT REPAIR

Cylinder Head

Specifications

Torque Specifications

DESCRIPTION	TORQUE (N·m)
Cylinder Head Bolts	1st Step: Tighten the bolt to 40 ± 5 N·m 2nd Step: Tighten the bolt an additional 90 ± 5° 3rd Step: Tighten the bolt an additional 90 ± 5°
Cylinder Head Cover Bolts	11

Clearance Specifications

DESCRIPTION	SPECIFICATION (mm)
Cylinder Head Flatness	0.04
Intake Valve Deflection	0.02
Exhaust Valve Deflection	0.04
Spring Height	47.7

Disassembly

NOTE :
The following special tools are required to perform the repair procedure:
- CH-20010 - Camshaft Holder
- CH-20011 - Valve Seal Installer
- CH-20012 - Valve Stem Seal Installer Guide
- CH-20013 - Valve Seal Remover
- CH-20017 - Valve Keeper Installer
- CH-20018 - Valve Spring Compressor

NOTE :
Replacement cylinder head comes complete with valves, seals, springs, retainers, keepers, tappets, and camshafts.

1. Remove camshafts (See Camshaft Removal & Installation in Section 02 Engine).
2. Remove the hydraulic tappet assembly (1).

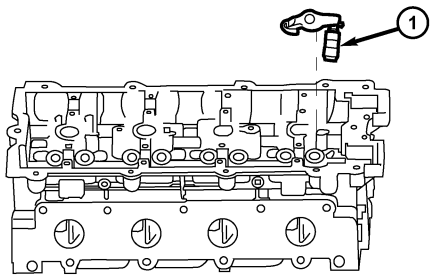

besm020071

Downloaded from www.Manualslib.com manuals search engine

3. Using the special tool CH-20018 (1), compress the valve spring.

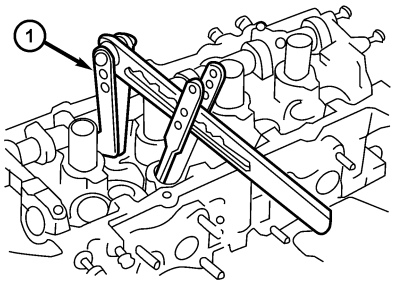

besm020067

4. Remove the valve keeper (1), valve spring retainer (2) and valve spring (3).
5. Push the valve stem from the cylinder head and remove the valve (4).

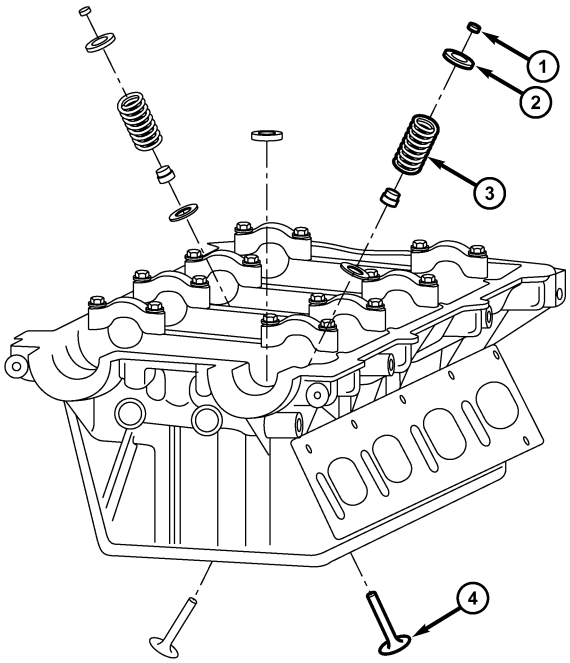

vism080041

6. Using special tool CH-20013 (1), remove the valve oil seal.

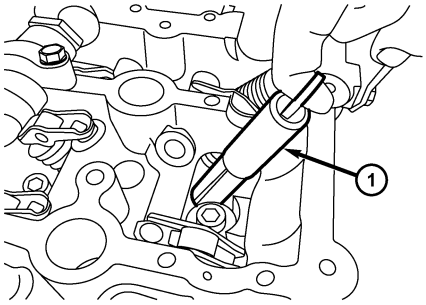

ltsm020225

7. Remove the valve guide.
8. Remove the spark plugs.

Downloaded from www.Manualslib.com manuals search engine

Inspection

Inspect the cylinder head for the following:
- Cylinder head must be flat within 0.04 mm.
- Inspect camshaft bearing journals for scoring.
- Remove carbon and varnish deposits from inside of valve guides with a valve guide cleaner.
- Verify the valve tappets move freely in their bores, and that they have been rotating.
- Check the valve guide height.

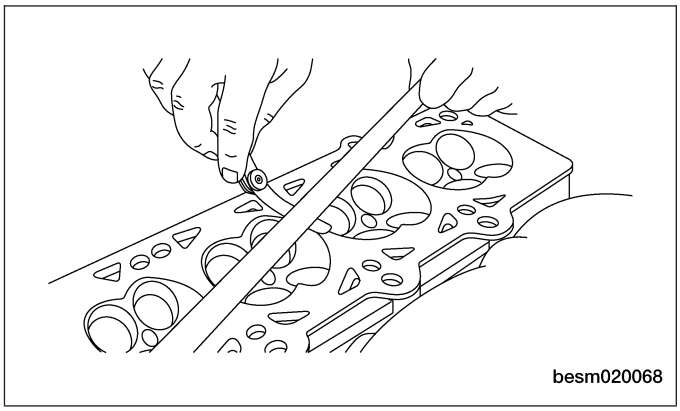
besm020068

Assembly

1. Install new valve guide if necessary.
2. Install new valve seat if necessary.
3. Using special tool CH-20011 (1) and CH-20012 (2), install the new valve oil seal.

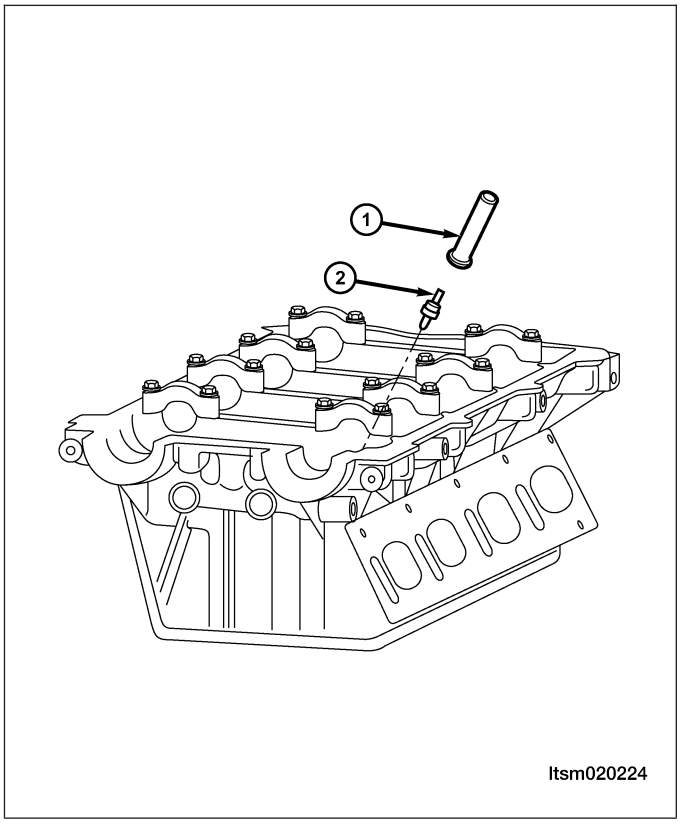

ltsm020224

4. Install the valves into the cylinder head (larger diameter on intake side).
5. Install the valve springs.
6. Install the valve spring retainers.

Downloaded from www.Manualslib.com manuals search engine

7. Using a valve spring compressor CH-20018 (1), compress the valve springs.
8. Install the valve keepers.

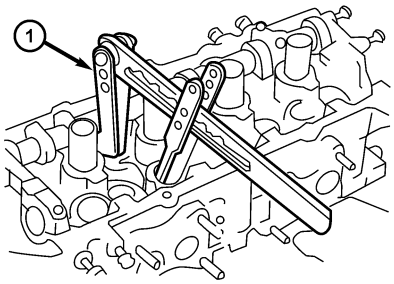

besm020067

9. Strike the valve stem lightly with a plastic hammer after installation to verify proper assembly.
10. Install valve tappets in the head.
11. Install the camshafts.

Installation Notes:

- Coat the valve oil seal with engine oil.

Camshaft

Specifications

Camshaft Specifications

DESCRIPTION	SPECIFICATION (mm)
Intake Cam Lobe Height	37.15
Exhaust Cam Lobe Height	37.05
Journal #1 Outer Diameter	31.934 - 31.95
Journal #2, #3, #4, #5, Outer Diameter	23.947 - 23.96
Cam Bearing #1 Inner Diameter	32 - 32.025
Cam Bearing #2, #3, #4, #5, Inner Diameter	24 - 24.021
Journal #1 Clearance	0.05 - 0.091
Journal #2, #3, #4, #5 Clearance	0.04 - 0.074
Intake Camshaft Axial Clearance	0.15 - 0.20
Exhaust Camshaft Axial Clearance	0.15 - 0.20

Downloaded from www.Manualslib.com manuals search engine

Disassembly

1. Remove the camshaft bearing caps bolts.
   NOTE: Equally loosen camshaft bearing cap bolts in several steps.

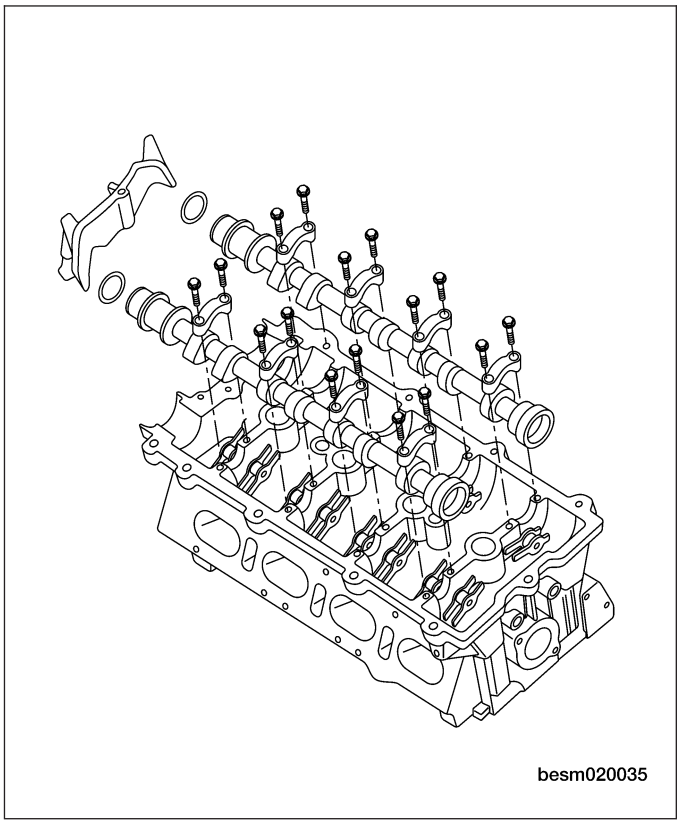
besm020035

2. Remove the camshaft bearing caps and place them in proper order.
   NOTE: The camshaft bearing caps are marked for identification.
3. Remove the camshafts and then remove the camshaft seals.

Inspection

Inspect the camshaft for the following:
- Measure the camshaft cam lobe height.
- If wear is beyond the limit, replace the camshaft.

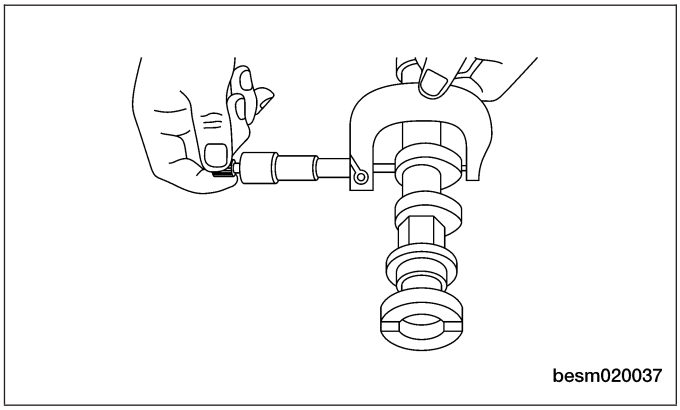
besm020037

CAMSHAFT CAM LOBE HEIGHT	
Intake Cam Lobe Height	37.15 mm
Exhaust Cam Lobe Height	37.05 mm

Downloaded from www.Manualslib.com manuals search engine

- Measure the outer diameter of the camshaft journal.

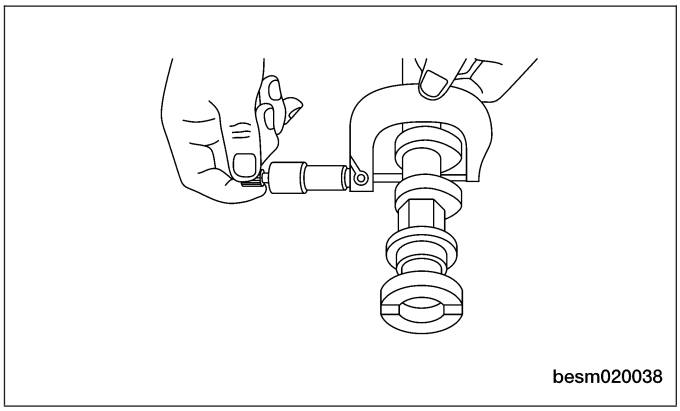
besm020038

OUTER DIAMETER OF CAMSHAFT JOURNAL	
Journal #1 Outer Diameter	31.934 - 31.95 mm
Journal #2, #3, #4, #5, Outer Diameter	23.947 - 23.96 mm

- Measure the inner diameter of the camshaft bearing.

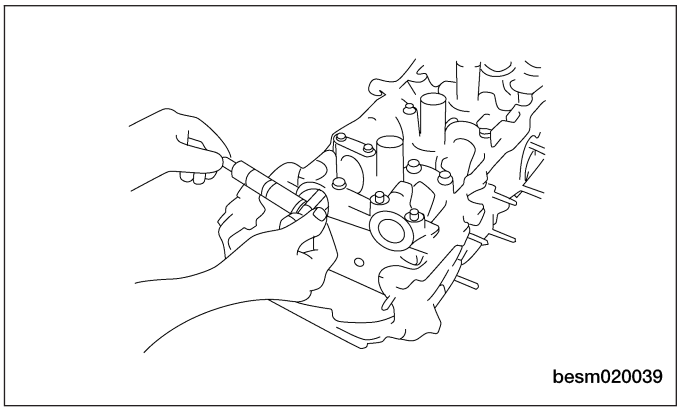
besm020039

INNER DIAMETER OF CAMSHAFT BEARING	
Cam Bearing #1 Inner Diameter	32 - 32.025 mm
Cam Bearing #2, #3, #4, #5, Inner Diameter	24 - 24.021 mm

- Calculation of camshaft journal clearance

Journal clearance = (inner diameter of camshaft bearing) - (outer diameter of camshaft journal)

CAMSHAFT JOURNAL CLEARANCE	
Journal #1 Clearance	0.05 - 0.091 mm
Journal #2, #3, #4, #5 Clearance	0.04 - 0.074 mm

Downloaded from www.Manualslib.com manuals search engine

- Measure the axial clearance of camshaft.

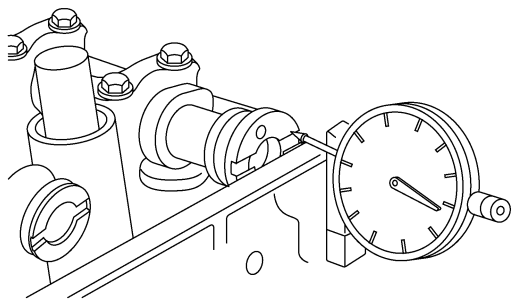
besm020070

CAMSHAFT AXIAL CLEARANCE	
Intake Camshaft	0.15 - 0.20 mm
Exhaust Camshaft	0.15 - 0.20 mm

Assembly

1. Using special tool CH-20010 (1), install the camshaft holder to hold the camshafts in place.

NOTE :
The camshaft holder will prevent the camshafts from rotating in either direction.

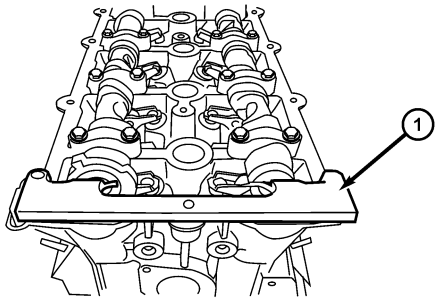

besm020016

2. Installation is in the reverse order of removal.

Installation Notes:

- Install the intake and exhaust camshaft bearing caps in the proper order.
- Slowly tighten bolts to the specified torque.
- Follow the torque sequence as shown.

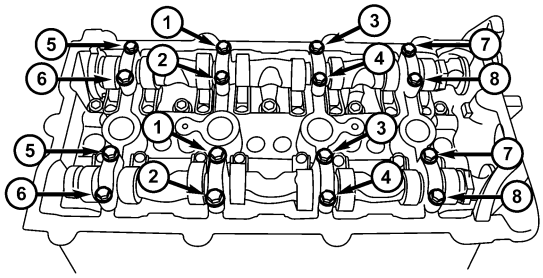

besm020036

Downloaded from www.Manualslib.com manuals search engine

Valve & Valve Guides

Specifications

Valve & Valve Guide Specifications

DESCRIPTION	SPECIFICATION (mm)
Intake Valve Deflection	0.02
Exhaust Valve Deflection	0.04
Intake Valve Guide Clearance	0.012 - 0.043
Exhaust Valve Guide Clearance	0.032 - 0.063

Disassembly

NOTE :
The following special tools are required to perform the repair procedure:
- CH-20011 - Valve Seal Installer
- CH-20012 - Valve Stem Seal Installer Guide
- CH-20013 - Valve Seal Remover
- CH-20017 - Valve Keeper Installer
- CH-20018 - Valve Spring Compressor

1. Using the special tool CH-20018 (1), compress the valve springs.

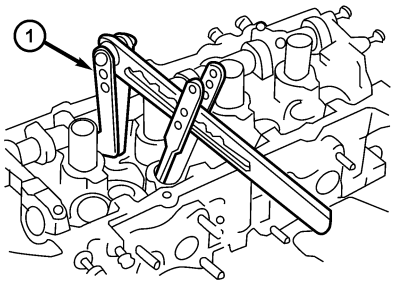

besm020067

Downloaded from www.Manualslib.com manuals search engine

2. Remove the valve keeper (1), valve spring retainer (2) and valve spring (3).
3. Remove valves (4) from the cylinder head.

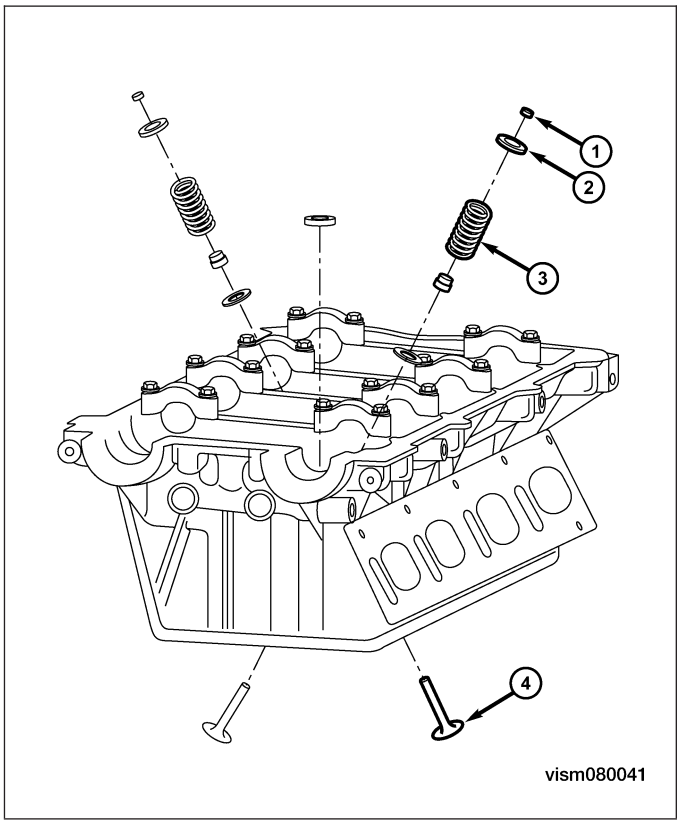

Inspection

Inspect the valves for the following:

- Clean all valves thoroughly and discard burned, warped and cracked valves.
- Check valve seats and valve faces for damage.
- When reconditioning valves follow the specifications outlined for both intake and exhaust valves.

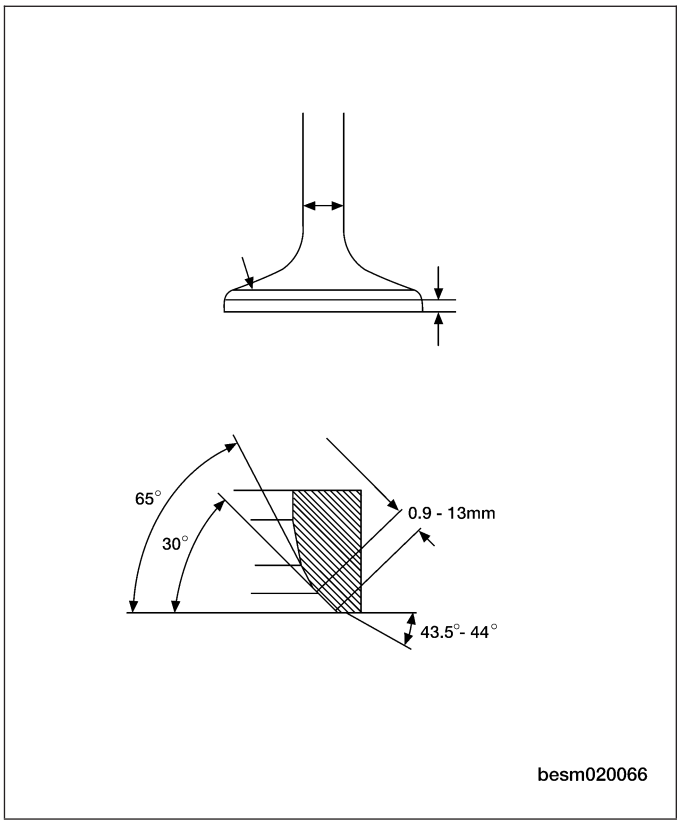

Downloaded from www.Manualslib.com manuals search engine

ITEM		SPECIFICATION (mm)
Valve Outer Diameter	Intake Valve	5.98 ± 0.008
	Exhaust Valve	5.96 ± 0.008
Valve Guide Inner Diameter	Intake Valve	5.4 ± 0.1
	Exhaust Valve	5.4 ± 0.1
Fringe Thickness On Top Of Valve	Intake Valve	0.3 ± 0.15
	Exhaust Valve	0.3 ± 0.15
Valve Tilt Angle	Intake Valve	65°
	Exhaust Valve	68°
Valve Height	Intake Valve	107.998
	Exhaust Valve	106.318

- Measure valve deflection.

VALVE DEFLECTION LIMIT (DIAL GAUGE READING)	
Intake	0.02 mm
Exhaust	0.04 mm

- If it exceeds the limit, check valve to valve guide clearance.
  - Measure valve stem diameter and valve guide inner diameter.
  - Check that clearance is within specification.
  - If it exceeds the limit, replace valve or valve guide.

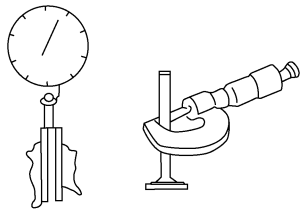

besm020073

VALVE TO VALVE GUIDE CLEARANCE STANDARD	
Intake	0.012 - 0.043 mm
Exhaust	0.032 - 0.063 mm

Assembly

1. Install the valves into the cylinder head (larger diameter on intake side).
2. Install the valve springs.
3. Install the valve spring retainers.

Downloaded from www.Manualslib.com manuals search engine

4. Using valve spring compressor CH-20018 (1), compress the valve springs.
5. Install the valve keepers.

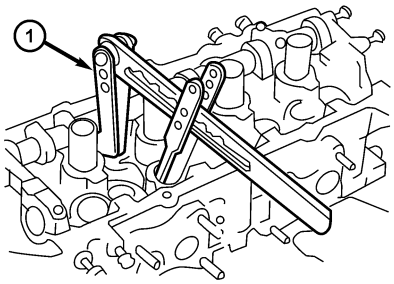

besm020067

6. Strike the valve stem lightly with a plastic hammer after installation to verify proper assembly.

Valve Springs

Specifications

Valve Spring Specifications

DESCRIPTION	SPECIFICATION (mm)
Spring Free Length	47.7
Spring Height At 620 Newtons Of Pressure	32.0

Disassembly

NOTE :
The following special tools are required to perform the repair procedure:
- CH-20011 - Valve Seal Installer
- CH-20012 - Valve Stem Seal Installer Guide
- CH-20013 - Valve Seal Remover
- CH-20017 - Valve Keeper Installer
- CH-20018 - Valve Spring Compressor

1. Using the special tool CH-20018 (1), compress the valve springs.

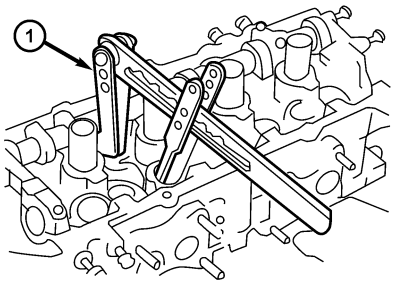

besm020067

Downloaded from www.Manualslib.com manuals search engine

2. Remove the valve keeper (1), valve spring retainer (2).
3. Remove the valve springs (3) from the cylinder head.

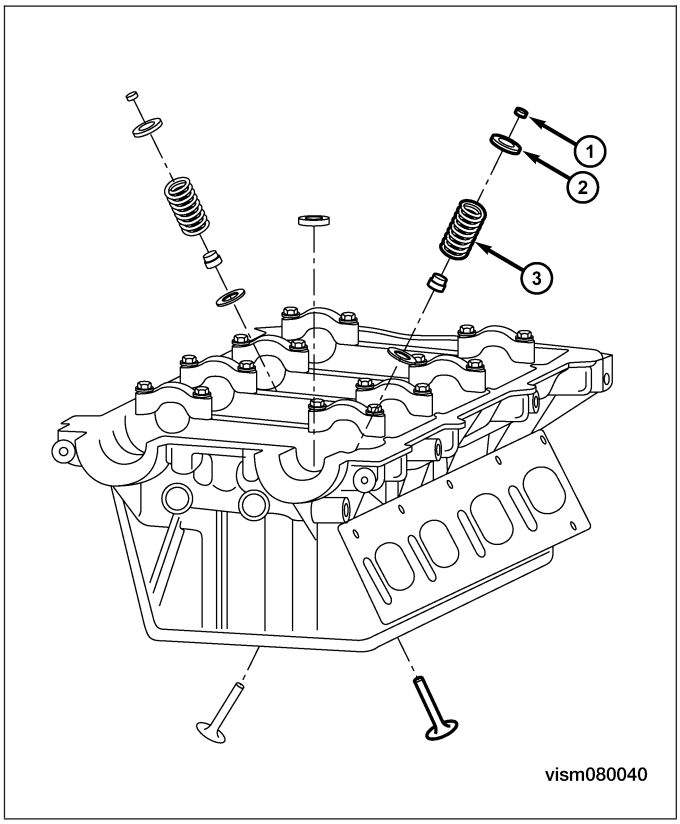

Inspection

Inspect the valve springs for the following:

- Whenever valves have been removed for inspection, reconditioning or replacement, valve springs should be tested for correct load.
- Discard the springs that do not meet specifications.
- The following specifications apply to both intake and exhaust valve springs.

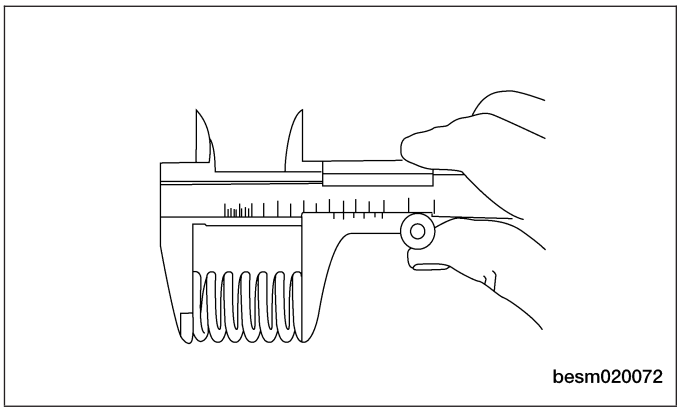

VALVE SPRING LENGTH/HEIGHT	
Spring Free Length	47.7 mm
Spring Height At 620 Newtons Of Pressure	32.0 mm

If it is not within specifications, replace the valve spring.

Downloaded from www.Manualslib.com manuals search engine

Assembly

1. Install the valve springs.
2. Install the valve spring retainers.
3. Using a valve spring compressor CH-20018 (1), compress the valve springs.
4. Install the valve keepers.

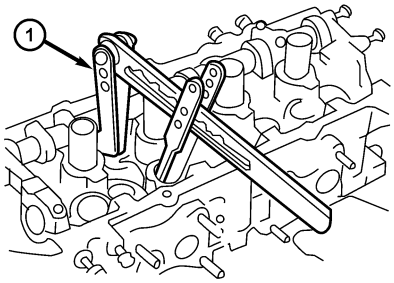

besm020067

5. Strike the valve stem lightly with a plastic hammer after installation to verify proper assembly.

Downloaded from www.Manualslib.com manuals search engine

2.4L ENGINE MECHANICAL

GENERAL INFORMATION 02-151
Description 02-151
Operation 02-151
Specifications 02-151
Special Tools 02-154
Lubrication System 02-160

DIAGNOSIS & TESTING 02-163
Engine Performance Diagnostics 02-163
Engine Mechanical Diagnostics 02-164
Cylinder Compression Pressure Test 02-165
Cylinder Head Gasket Test 02-166
Engine Oil Pressure Test 02-166

ON-VEHICLE SERVICE 02-167

Accessory Drive Belt 02-167
Removal & Installation 02-167

Air Cleaner Element 02-168
Removal & Installation 02-168

Air Cleaner Housing 02-169
Removal & Installation 02-169

Cylinder Head Cover 02-170
Removal & Installation 02-170

Camshaft 02-171
Removal & Installation 02-171

Cylinder Head 02-175
Removal & Installation 02-175

Front Crankshaft Oil Seal 02-177
Removal & Installation 02-177

Rear Crankshaft Oil Seal 02-179
Removal & Installation 02-179

Engine Mounts 02-181
Removal & Installation - Left Mount 02-181
Removal & Installation - Right Mount 02-182
Removal & Installation - Front Mount 02-182
Removal & Installation - Rear Mount 02-183

Engine Assembly 02-183
Removal & Installation 02-183

Engine Timing Belt 02-189
Removal & Installation 02-189
Inspection 02-194

Timing Belt Automatic Tensioner 02-196
Removal & Installation 02-196
Inspection 02-197

Upper Balance Shaft Timing Belt 02-198
Removal & Installation 02-198

Exhaust Manifold 02-200
Removal & Installation 02-200

Intake Manifold 02-201
Removal & Installation 02-201

Upper Balance Shaft 02-204
Removal & Installation 02-204
Upper Balance Shaft Bearing Replacement 02-207

Lower Balance Shaft 02-208
Removal & Installation 02-208
Lower Balance Shaft Bearing Replacement 02-211

Oil Filter 02-212
Removal & Installation 02-212

Oil Pan 02-213
Removal & Installation 02-213

Oil Pump 02-215
Removal & Installation 02-215

Oil Strainer 02-216
Removal & Installation 02-216

ENGINE UNIT REPAIR 02-217

Engine Block 02-217
Specifications 02-217
Disassembly 02-218
Inspection 02-220
Assembly 02-220

Pistons 02-221
Specifications 02-221
Disassembly 02-222
Inspection 02-224
Assembly 02-226

Connecting Rods 02-229
Specifications 02-229
Disassembly 02-229
Inspection 02-230
Assembly 02-231

Crankshaft 02-233
Specifications 02-233
Disassembly 02-234
Inspection 02-236
Assembly 02-237

Downloaded from www.Manualslib.com manuals search engine

CYLINDER HEAD UNIT REPAIR 02-241

Cylinder Head 02-241
- Specifications 02-241
- Disassembly 02-241
- Inspection 02-242
- Assembly 02-242

Camshaft 02-243
- Specifications 02-243
- Disassembly 02-244
- Camshaft 02-245
- Hydraulic Adjusters 02-245
- Rocker Arms 02-246

Valve & Valve Guides 02-246
- Specifications 02-246
- Disassembly 02-247
- Valves 02-248
- Valve Guides 02-250
- Valve Seats 02-251
- Assembly 02-252

Valve Springs 02-252
- Specifications 02-252
- Disassembly 02-253
- Inspection 02-254
- Assembly 02-255

Downloaded from www.Manualslib.com manuals search engine

GENERAL INFORMATION

Description

The 2.4L in-line four cylinder engine has the following features:
- Single overhead camshaft
- Four valves per chamber cylinder head design
- Aluminum cylinder head
- Cast iron cylinder block

Operation

The 2.4L engine utilizes 4 valves-per-cylinder and a single-overhead-camshaft design. The engine uses an individual coil ignition system and multi-point sequential injection. The cylinder block is made of cast iron and the bearing caps are integrated into the lower cylinder block assembly. A cast iron oil pan is located at the bottom of the lower cylinder block. The camshaft is mounted in the cylinder head and acts against the valve tappets to open and close the valves. The camshaft is driven off the front of the cylinder head by the timing belt. The belt is driven by a sprocket that is located on the crankshaft. The piston assembly is an aluminum piston with a cast iron connecting rod.

The aluminum cylinder head contains a single overhead camshaft with 4 valves-per-cylinder construction. The valves are arranged in two in-line banks. The cylinder head incorporates powdered metal valve guides and seats. The cylinder head is sealed to the block using a multi-layer steel head gasket and retaining bolts.

Specifications

2.4L General Engine Specifications

DESCRIPTION	SPECIFICATION
Type	In-Line, OHV, SOHC
Number of Cylinders	4
Compression Ratio	9:1
Output Power (kw)	95 / 5500 RPM
Stroke	100 mm
Cylinder Diameter	86.5 mm
Displacement	2351 cc
Firing Order	1-3-4-2
Max Torque (N·m)	198.1

2.4L Mechanical Specifications

ITEM			STANDARD	LIMIT
Engine Timing Belt	Tensioner Arm Protrusion		12	-
	Tensioner Arm Depression (98-196 N)		≤1	-
Camshaft	Cam Height	Air-In	37.50	37.00
		Air-Out	36.99	36.49
	Shaft Diameter		45.0	-
Cylinder Head	Lower Surface Flatness		0.03	0.2
	Surface Grinding Limit* Total Grinding of Cylinder Block and Cylinder Head		-	0.2
	Full Height		119.9 - 120.1	-

Downloaded from www.Manualslib.com manuals search engine

ITEM			STANDARD	LIMIT
Valve	Edge Thickness	Air-In	1.0	0.5
		Air-Out	1.2	0.7
	Valve Rod Diameter		6.0	-
	Crest Clearance Between Valve Rod and Guide	Air-In	0.02 - 0.05	0.10
		Air-Out	0.03 - 0.07	0.15
	Inclination Angle		45° - 45.5°	-
	Height	Air-In	112.30	111.80
		Air-Out	114.11	113.61
Valve Spring	Free Height		51.0	50.0
	Pre-Loading Force/Operation Height km/mm		27.2/44.2	-
	Center Line		≤2°	≤4°
Valve Guide	Valve Margin		0.9 - 1.3	-
	Internal Diameter		6.0	-
	External Diameter		11.0	-
	Depression Depth		14.0	-
	Valve Stem Height		49.3	49.8
Engine Oil Pump	Side Clearance	Driving Gear	0.08 - 0.14	-
		Driven Gear	0.06 - 0.12	-
Piston	Piston Clearance		0.02 - 0.04	-
Piston Ring	Lateral Clearance	No.1 Ring	0.02 - 0.06	0.1
		No.2 Ring	0.02 - 0.06	0.1
	End Clearance	No.1 Ring	0.25 - 0.35	0.8
		No.2 Ring	0.40 - 0.55	0.8
		Oil Ring	0.10 - 0.40	1.0
Piston Pin	External Diameter		22.0	-
	Depressing Force (Kg)		755 - 1750	-
	Depressing Force (Kg)		Room Temperature	-
Connecting Rod	Big End Clearance		0.10 - 0.25	0.4
Crankshaft	Axial Clearance		0.05 - 0.18	0.25
	Main Journal Diameter		57	-
	Connecting Journal Diameter		45	-
	Main Journal Oil Clearance		0.02 - 0.04	0.1
Cylinder Block	Upper Surface Flatness		0.05	0.1
	Upper Surface Grinding Limit		-	*0.2
Cylinders	Cylinder Out-of-Round		0.01	-
Cylinder Head	Replacement Valve Guides	0.25 O.S.	11.25 - 11.27	-
		0.50 O.S.	11.50 - 11.52	-
	Intake Valve Replacement Valve Seats	0.30 O.S.	34.435 -34.455	-
		0.60 O.S.	34.735 - 34.755	-
	Exhaust Valve Replacement Valve Seats	0.30 O.S.	31.935 - 31.955	-
		0.60 O.S.	32.235 - 32.255	-

Downloaded from www.Manualslib.com manuals search engine

Torque Specifications

CAUTION:
When torquing a fastener in two steps, DO NOT use a torque wrench for the second step.

DESCRIPTION	TORQUE (N·m)
Alternator Adjusting Bolt	10
Alternator Bracket Bolt	24
Alternator Center Nut	45
Camshaft Position Sensor Bracket	14
Camshaft Position Sensor	10
Camshaft Position Sensor Cylinder	22
Crank Belt Gear	25
Ignition Coil	10
Locking Bolt	22
Spark Piston	25
Water Pump Belt Gear	9
Timing Belt Automatic Tensioner Bolt	24
Belt Gear of Balance Axle	46
Central Belt Wheel Bolt	36
Lower Balance Shaft Bolt	55
Timing Belt Cover Bolts	11
Tensioner Wheel Bolt	49
Tensioner Arm Bolt	22
Tensioner Bracket	49
Timing Belt Indicator	09
Timing Belt Rear Cover	11
Upper Balance Shaft Tensioner Bolt	19
Camshaft Pulley Bolt	90
Crankshaft Pulley Bolt	120
Connecting Bolt of Outflow Pipe	20
EGR Valve	22
Exhaust Manifold Nut (M8)	30
Exhaust Manifold Nut (M10)	50
Fuel Pressure Regulator	9
Fuel Return Pipe	09
Injector and Distribution Pipe	12
Intake Manifold Bolt	20
Intake Manifold Bracket	14
Thermostat Housing Bolt	24
Water Pump Bolts	14
Rocker Cover Bolt	4
Rocker and Camshaft Assembly Bolt	32
Trust Bearing Cover Bolt	19

Downloaded from www.Manualslib.com manuals search engine

DESCRIPTION	TORQUE (N·m)
Cylinder Head Bolts	1st Step: Tighten the bolt to 78 N·m 2nd Step: Completely loosen the bolt 3rd Step: Retighten the bolt to 20 N·m 4th Step: Tighten the bolt an additional 90° 5th Step: Finish tightening the bolt an additional 90°
Engine Oil Pump Cover Bolt	16
Front Cover Bolts	24
Flange Bolt	37
Oil Pan Drain Plug	45
Oil Pan	18
Oil Pressure Switch	10
Oil Pressure Relief Plug	45
Oil Plug	24
Oil Strainer Screw Bolts	19
Oil Filter Adapter Bolts	19
Connecting Rod Nuts	1st Step: Tighten the nuts to 20 N·m 2nd Step: Tighten the nuts an additional 90°-100°
Flywheel Bolts	135
Oil Seal Cover Screw Bolts	11
Crankshaft Main Bearing Bolts	1st Step: Tighten the bolts to 25 N·m 2nd Step: Tighten the bolts an additional 90°-100°

Special Tools

Camshaft Pulley Spanner Wrench MB-990767	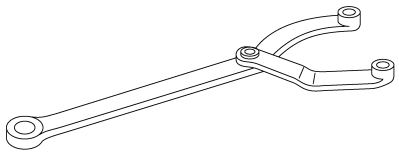 ltsm020004
Driver Handle MB-990938	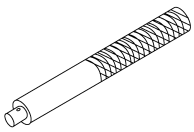 ltsm020026

Downloaded from www.Manualslib.com manuals search engine

Balance Shaft Bearing Puller Limiter MB-991603	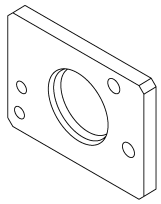 ltsm020020
Cylinder Cover Bolt Spanner MB-991654	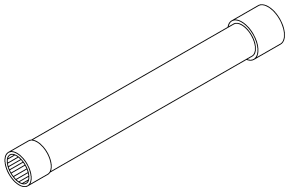 ltsm020011
Plug Spanner MD-998162	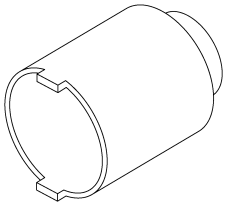 ltsm020016
Crankshaft Front Oil Seal Duct MD-998285	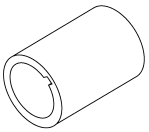 ltsm020023
Balance Shaft Bearing Puller MD-998371	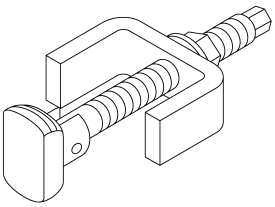 ltsm020018

Downloaded from www.Manualslib.com manuals search engine

Balance Shaft Bearing Puller MD-998372	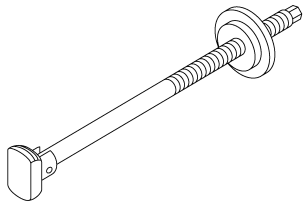 ltsm020019
Crankshaft Front Oil Seal Installer MD-998375	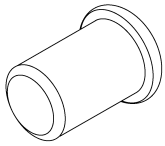 ltsm020022
Hydraulic Adjuster Leak Tester MD-998440	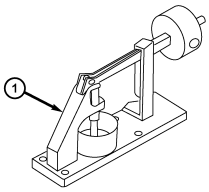 ltsm020159
Hydraulic Adjuster Keeper MD-998441	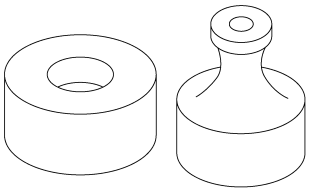 ltsm020158
Hydraulic Adjuster Wiring MD-998442	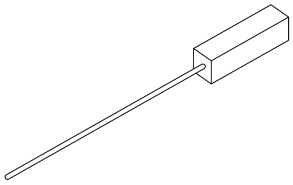 ltsm020010

Downloaded from www.Manualslib.com manuals search engine

Hydraulic Adjuster Keeper MD-998443	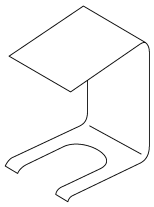 ltsm020008
Balance Shaft Bearing Installer MD-998705	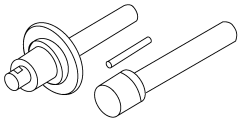 ltsm020021
Camshaft Oil Seal Installer MD-998713	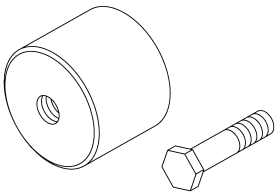 ltsm020009
Pin For Belt Gear MD-998719	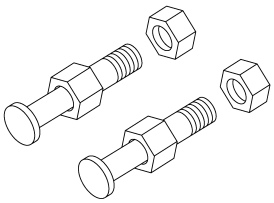 ltsm020005
Oil Pan Remover MD-998727	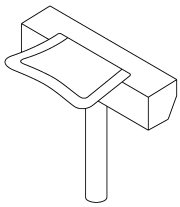 ltsm020014

Downloaded from www.Manualslib.com manuals search engine

Valve Spring Compressor MD-998735	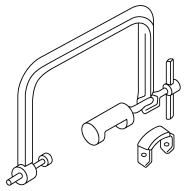 ltsm020157
Automatic Tensioner Socket MD-998767	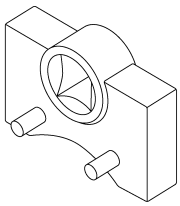 ltsm020007
Valve Spring Compressor MD-998772	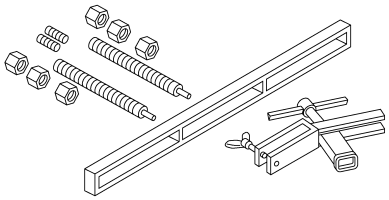 ltsm020012
Valve Oil Seal Installer MD-998774	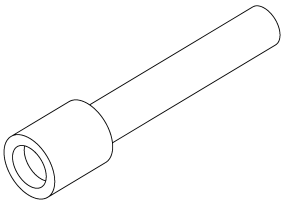 ltsm020013
Crankshaft Rear Oil Seal Installer MD-998776	 ltsm020027

Downloaded from www.Manualslib.com manuals search engine

Crankshaft Pulley Puller MD-998778	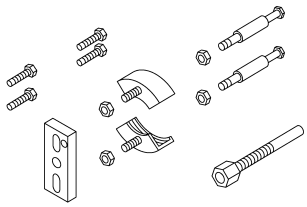 ltsm020002
Piston Disassembling and Assembling Tool MD-998780	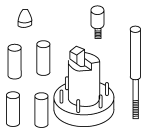 ltsm020025
Flywheel Holder MD-998781	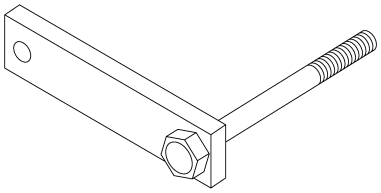 ltsm020001
Plug Spanner Fixer MD-998783	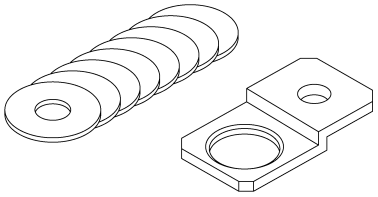 ltsm020017
Upper Balance Shaft Pulley Holder MD-998785	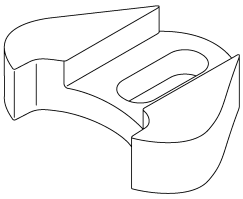 ltsm020003

Downloaded from www.Manualslib.com manuals search engine

Oil Filter Wrench MB-991828	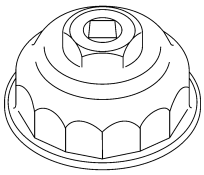 ltsm020036
Oil Filter Wrench MB-991396	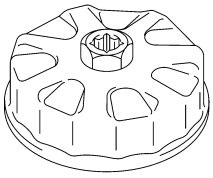 ltsm020055

Lubrication System

The engine lubrication system operates as follows:

- Oil is drawn into the oil pump through the oil pump strainer tube in the sump of the oil pan.
- Oil is pumped through the oil filter to the cylinder block.
- Oil enters the main oil gallery where it is distributed to the crankshaft main journals and to the cylinder head.
- From the main journals, the oil is routed through cross-drilled passages in the crankshaft to lubricate the connecting rod bearings. Controlled leakage through the crankshaft main bearings and connecting rod bearings is slung radially outward to cool and lubricate the cylinder walls as well as the entire connecting rod, piston and piston ring assembly.
- The lubrication system is a fully force-fed, full-flow filtration type. The oil pump is a gear type which is driven by the crankshaft via the timing belt.

Downloaded from www.Manualslib.com manuals search engine

Oiling System

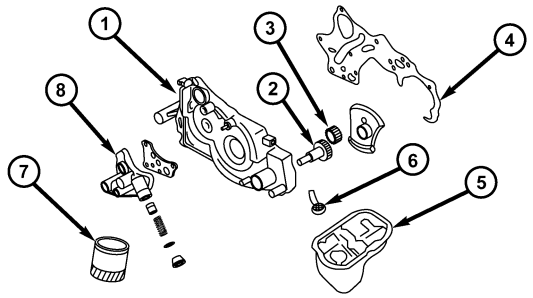

ltsm020045

1 - Engine Front Cover	5 - Oil Pan
2 - Oil Pump Driving Gear	6 - Oil Strainer
3 - Oil Pump Driven Gear	7 - Oil Filter
4 - Oil Pump Cover	8 - Oil Filter Adaptor

Oil Pump

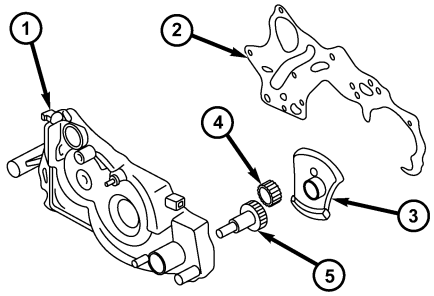

ltsm020046

1 - Front End Cover	4 - Oil Pump Driven Gear
2 - Front End Cover Pad	5 - Oil Pump Driving Gear
3 - Oil Pump Rear Cover	

Downloaded from www.Manualslib.com manuals search engine

Oil Filter and Oil Filter Adaptor

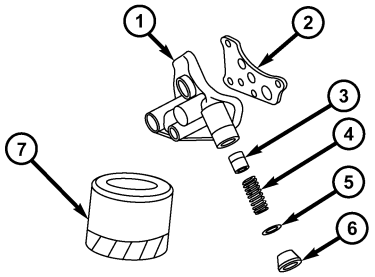

ltsm020047

1 - Oil Filter Adaptor	5 - Spacer
2 - Gasket	6 - Plug Screw
3 - Pressure Limiting Valve Plunger	7 - Oil Filter
4 - Spring	

Downloaded from www.Manualslib.com manuals search engine

DIAGNOSIS & TESTING

Engine Performance Diagnostics

CONDITION	POSSIBLE CAUSES	CORRECTION
Engine Does Not Start	1. Weak battery. 2. Corroded or loose battery connections. 3. Faulty starter. 4. Faulty coil(s) or control unit. 5. Incorrect spark plug gap. 6. Contamination in fuel system. 7. Faulty fuel pump. 8. Incorrect timing.	1. Test battery. Charge or replace if necessary. 2. Clean and tighten battery connections. Apply a coat of light mineral grease to terminals. 3. Test starting system. Check for codes. (Refer to Appropriate Diagnostic Information) 4. Test and replace as needed. (Refer to Appropriate Diagnostic Information) 5. Set gap. 6. Clean system and replace fuel filter. 7. Test fuel pump and replace as needed. (Refer to Appropriate Diagnostic Information) 8. Check for a skipped timing belt.
Engine Stalls Or Idles Rough	1. Idle speed too low. 2. Incorrect fuel mixture. 3. Intake manifold leakage. 4. Faulty ignition coil(s).	1. Test minimum air flow. (Refer to Appropriate Diagnostic Information) 2. (Refer to Appropriate Diagnostic Information) 3. Inspect intake manifold, manifold gasket, and vacuum hoses. 4. Test and replace if necessary. (Refer to Appropriate Diagnostic Information)
Engine Loss Of Power	1. Dirty or incorrectly gapped spark plugs. 2. Contamination in fuel system. 3. Faulty fuel pump. 4. Incorrect valve timing. 5. Leaking cylinder head gasket. 6. Low compression. 7. Burned, warped, excessive clearance, or pitted valves. 8. Plugged or restricted exhaust system. 9. Faulty ignition coil(s). 10. Burned spark plugs.	1. Clean spark plugs and set gap. 2. Clean system and replace fuel filter. 3. Test and replace if necessary. (Refer to Appropriate Diagnostic Information) 4. Correct valve timing. 5. Replace cylinder head gasket. 6. Test compression of each cylinder. 7. Replace valves. 8. Perform exhaust restriction test. Install new parts. 9. Test and replace if necessary. (Refer to Appropriate Diagnostic Information) 10. Replace spark plugs.

Downloaded from www.Manualslib.com manuals search engine

CONDITION	POSSIBLE CAUSES	CORRECTION
Engine Miss On Acceleration	1. Dirty or incorrectly gapped spark plugs. 2. Contamination in fuel system. 7. Burned, warped, excessive clearance, or pitted valves. 4. Faulty ignition coil(s).	1. Clean spark plugs and set gap. 2. Clean fuel system and replace fuel filter. 3. Replace valves. 4. Test and replace if necessary. (Refer to Appropriate Diagnostic Information)
Engine Miss At High Speed	1. Dirty or incorrect spark plug gap. 2. Faulty ignition coil(s). 3. Dirty fuel injector(s). 4. Contamination in fuel system.	1. Clean spark plugs and set gap. 2. Test and replace if necessary. (Refer to Appropriate Diagnostic Information) 3. Test and replace if necessary. (Refer to Appropriate Diagnostic Information) 4. Clean system and replace fuel filter.

Engine Mechanical Diagnostics

CONDITION	POSSIBLE CAUSES	CORRECTION
Valve Train Noise	1. High or low oil level in crankcase. 2. Thin or diluted oil. 3. Thick oil. 4. Low oil pressure. 5. Worn cam lobe. 6. Worn valve guides. 7. Excessive runout of valve seats on valve faces.	1. Check and correct engine oil level. 2. Change oil to correct viscosity. 3. Change engine oil and filter. 4. Check and correct engine oil level. 5. Install new camshaft. 6. Replace cylinder head. 7. Grind valve seats and replace valves.
Connecting Rod Noise	1. Insufficient oil supply. 2. Low oil pressure. 3. Thin or diluted oil. 4. Excessive bearing clearance. 5. Connecting rod journal out-of-round. 6. Connecting rod out-of-round. 7. Misaligned connecting rods. 8. Connecting rod nuts loose.	1. Check engine oil level. 2. Check engine oil level. Inspect oil pump relief valve and spring. 3. Change oil to correct viscosity. 4. Measure bearings for correct clearance. Repair if necessary. 5. Replace crankshaft or grind surface. 6. Replace connecting rod. 7. Replace bent connecting rods. 8. Tighten the connecting rod nuts.
Main Bearing Noise	1. Insufficient oil supply. 2. Low oil pressure. 3. Thin or diluted oil. 4. Excessive bearing clearance. 5. Excessive end play. 6. Crankshaft journal out-of-round or worn. 7. Loose flywheel or torque converter.	1. Check engine oil level. 2. Check engine oil level. Inspect oil pump. 3. Change oil to correct viscosity. 4. Measure bearings for correct clearance. Repair if necessary. 5. Check thrust bearing for wear on flanges. 6. Replace crankshaft or grind journals. 7. Tighten to correct torque.

Downloaded from www.Manualslib.com manuals search engine

CONDITION	POSSIBLE CAUSES	CORRECTION
Oil Pressure Drop	1. Low oil level. 2. Faulty oil pressure sending unit. 3. Low oil pressure. 4. Clogged oil filter. 5. Thin or diluted oil. 6. Excessive bearing clearance.	1. Check engine oil level. 2. Install new sending unit. 3. Check sending unit and main bearing oil clearance. 4. Install new oil filter. 5. Change oil to correct viscosity. 6. Measure bearings for correct clearance.
Oil Leaks	1. Misaligned or deteriorated gaskets. 2. Loose fastener, broken or porous metal part. 3. Misaligned or deteriorated cup or threaded plug.	1. Replace gasket. 2. Tighten, repair or replace the part. 3. Replace if necessary.
Oil Consumption Or Spark Plugs Fouled	1. PCV system malfunction. 2. Worn, scuffed or broken rings. 3. Carbon in oil ring slots. 4. Rings fitted too tightly in grooves. 5. Worn valve guide(s). 6. Valve stem seal(s) worn or damaged.	1. Check system and repair if necessary. 2. Hone cylinder bores. Install new rings. 3. Install new rings. 4. Remove rings and check grooves. If groove is not proper width, replace piston. 5. Replace cylinder head. 6. Replace seal(s).

Cylinder Compression Pressure Test

- The result of a cylinder compression pressure test can be utilized to diagnose several engine malfunctions.
- Ensure the battery is completely charged and the engine starter motor is in good operating condition. Otherwise the indicated compression pressures may not be valid for diagnostic purposes.
  - Check engine oil level and add oil if necessary.
  - Disconnect the spark plug wires.
  - Remove all spark plugs from engine (as spark plugs are being removed, check electrodes for abnormal firing indicators fouled, hot, oily, etc.).
  - Record cylinder number of each spark plug for future reference.
  - Disconnect fuel injector electrical connectors.
  - Be sure throttle blade is fully open during the compression check.
  - Insert compression pressure adaptor or the equivalent into each spark plug hole in cylinder head.
  - Crank engine until maximum pressure is reached on gauge. Record each cylinder pressure.
  - Compression should not be less than 880 kPa and not vary more than 25 percent from cylinder to cylinder.
  - If one or more cylinders have abnormally low compression pressures, repeat the compression test.
  - If the same cylinder or cylinders repeat an abnormally low reading on the second compression test, it could indicate the existence of a problem with the cylinder in question.

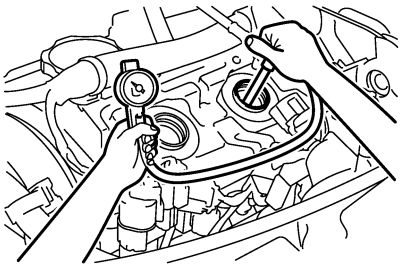

Itsm020191

NOTE :
The recommended compression pressures are to be used only as a guide to diagnosing engine problems. An engine should not be disassembled to determine the cause of low compression unless some malfunction is present.

Downloaded from www.Manualslib.com manuals search engine

Cylinder Head Gasket Test

- A cylinder head gasket leak can be located between adjacent cylinders, between a cylinder and the adjacent water jacket or from an oil passage to the exterior of the engine.
- Possible indications of the cylinder head gasket leaking between adjacent cylinders are:
  - Loss of engine power
  - Engine misfiring
  - Poor fuel economy
- Possible indications of the cylinder head gasket leaking between a cylinder and an adjacent water jacket are:
  - Engine overheating
  - Loss of coolant
  - Excessive steam (white smoke) emitting from exhaust
  - Coolant foaming

Engine Oil Pressure Test

1. Check the engine oil level.
2. Disconnect the oil pressure switch electrical connector.
3. Remove the oil pressure switch.
4. Install the mechanical oil pressure gauge.
5. Start the engine and warm to normal operating temperature.
6. After the engine has been warmed up, check that the oil pressure is within the specifications.
   - Standard Oil Pressure: At 750 ± 50 RPM: 0.8 MPa
7. Stop the engine.
8. Remove the oil pressure gauge.
9. Apply the specified sealant to the thread (1) of oil pressure switch.
10. Install the oil pressure switch (Tighten: Oil pressure switch to 10 ± 2 N·m).

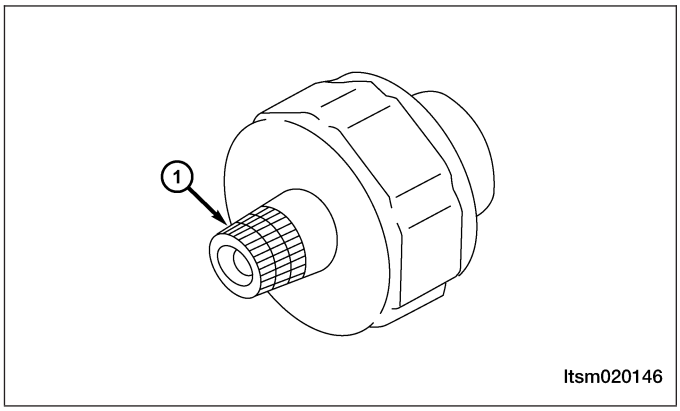

Downloaded from www.Manualslib.com manuals search engine

Accessory Drive Belt

Removal & Installation

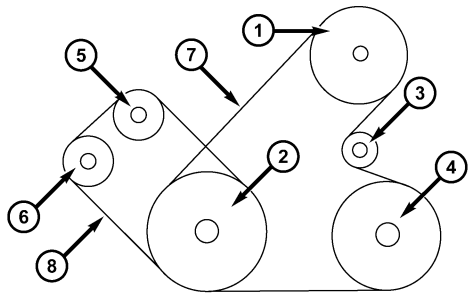

Itsm020176

1 - Power Steering Pump	5 - Coolant Pump Pulley
2 - Crankshaft Pulley	6 - Generator Pulley
3 - Idler Pulley	7 - A/C Compressor Belt
4 - A/C Compressor	8 - Generator Belt

WARNING!

Inspect the drive belt only when the engine is stopped.

1. Loosen the power steering pump adjustment bolt (1).

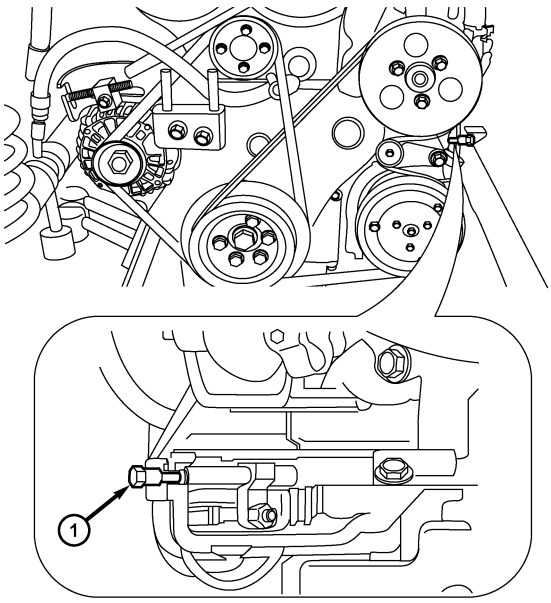

Itsm020185

Downloaded from www.Manualslib.com manuals search engine

2. Remove the A/C compressor belt.
3. Loosen the generator adjustment bolts (1).
4. Remove the generator belt.
5. Installation is in the reverse order of removal.

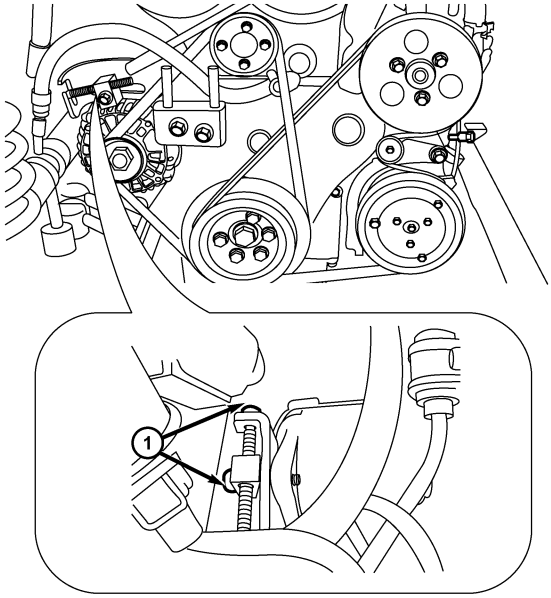

ltsm050004

Air Cleaner Element

Removal & Installation

1. Loosen the air cleaner case side clamps (1) and raise the air cleaner case (upper).
2. Remove the air cleaner element.
3. Installation is in the reverse order of removal.

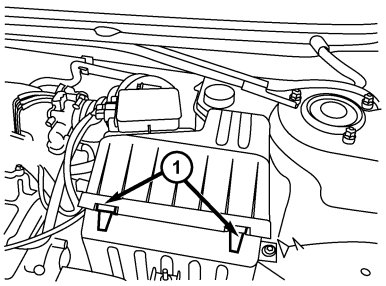

ltsm020239

Downloaded from www.Manualslib.com manuals search engine

Air Cleaner Housing

Removal & Installation

1. Disconnect the negative battery cable.
2. Disconnect the air flow sensor electrical connector.
3. Loosen the clamp between the air intake hose and the air cleaner.
4. Remove the retaining bolt (1), securing the air cleaner housing to its base.
   (Tighten: Air cleaner housing retaining bolts to 10 N·m)

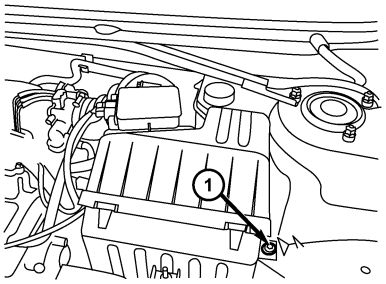

ltsm020240

5. Remove the air cleaner housing.

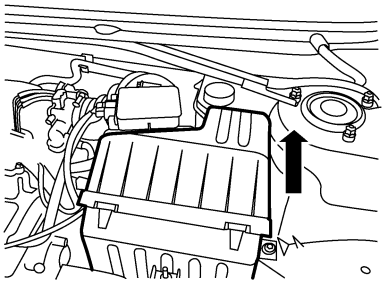

ltsm020160

6. Installation is in the reverse order of removal.

Downloaded from www.Manualslib.com manuals search engine

Cylinder Head Cover

Removal & Installation

1. Disconnect the negative battery cable.
2. Remove the accelerator cable bracket bolts (1). (Tighten: Accelerator cable bracket bolts to 10 N·m)
3. Remove the accelerator cable.
4. Remove the air flow hose clamp (2) and disconnect the air flow hose.
5. Remove the spark plug wires (3) and set them aside (See Spark Plug Wire Removal & Installation in Section 03 Electronic Engine Controls).
6. Remove the PCV tube (5).
7. Remove the cylinder head cover bolts (4). (Tighten: Cylinder head cover bolts to 11 N·m)

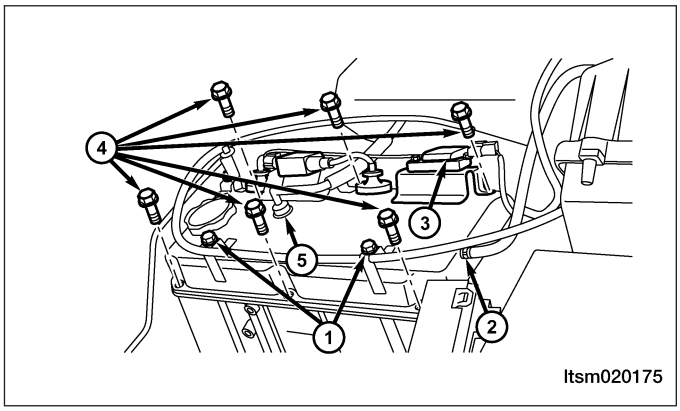

8. Remove the cylinder head cover from the cylinder head.
9. Remove the cylinder head cover gasket if necessary.
10. Installation is in the reverse order of removal.

NOTE :
Install a new cylinder head cover gasket during installation.

Downloaded from www.Manualslib.com manuals search engine

Camshaft

Removal & Installation

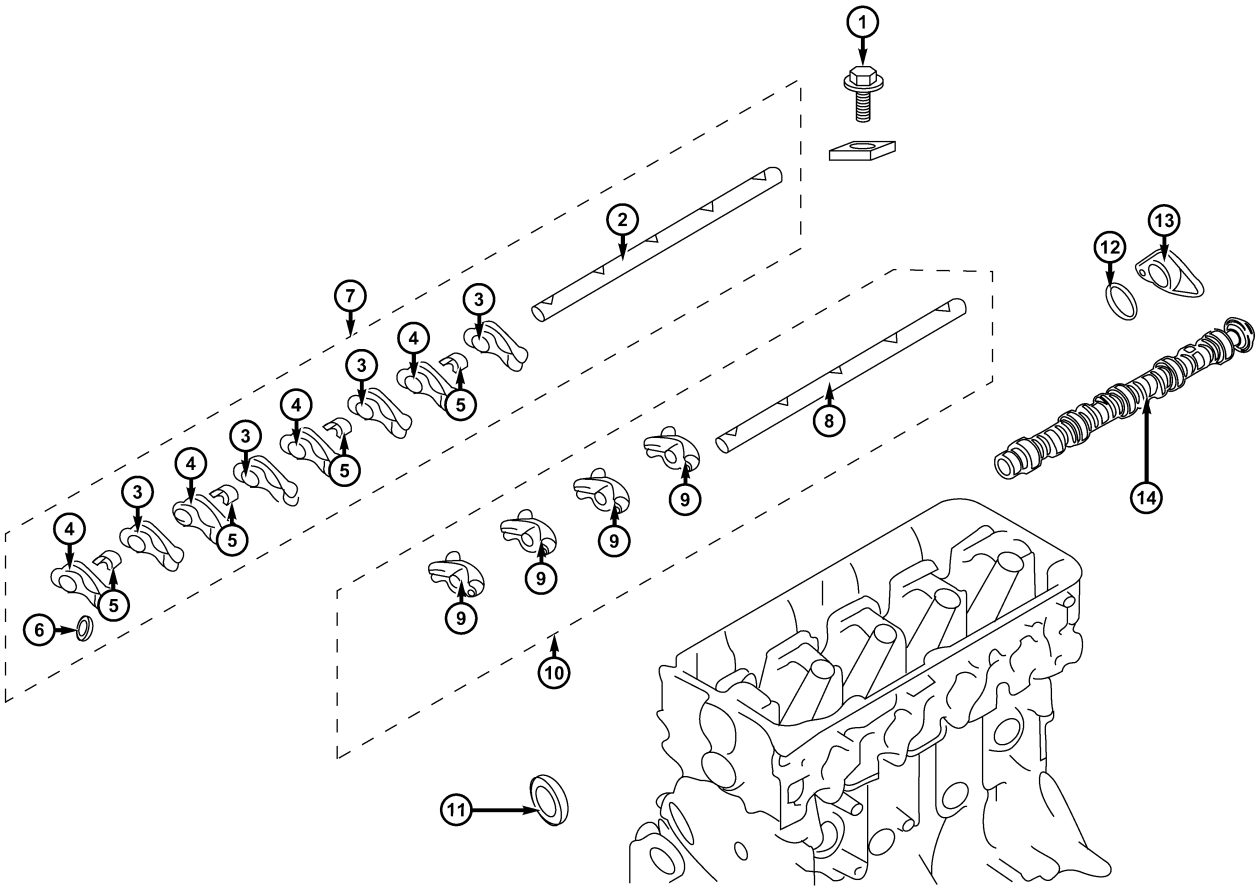

ltsm020081

1 - Rocker Shaft Retaining Bolt	8 - Exhaust Rocker Arm Shaft
2 - Intake Rocker Arm Shaft	9 - Rocker Arm
3 - Rocker Arm	10 - Rocker Arm and Rocker Shaft
4 - Rocker Arm	11 - Camshaft Oil Seal
5 - Rocker Shaft Spring	12 - O-Ring
6 - Hydraulic Adjuster	13 - Camshaft Thrust Plate
7 - Rocker Arm and Rocker Shaft	14 - Camshaft

NOTE :
The following special tools are required to perform the repair procedure:
- MD-998719 - Camshaft Belt Gear Holder
- MD-990767 - Camshaft Belt Gear Holder
- MD-998443 - Hydraulic Post Keeper

Downloaded from www.Manualslib.com manuals search engine

- MD-998442 - Hydraulic Post Wiring
- MD-998713 - Camshaft Oil Seal Installer
- MD-998441 - Hydraulic Post Keeper
- MD-998440 - Leak Tester

1. Remove the accessory drive belt (See Accessory Drive Belt Removal & Installation in Section 02 Engine).
2. Remove the engine timing belt (See Engine Timing Belt Removal & Installation in Section 02 Engine).
3. Remove the cylinder head cover (See Cylinder Head Cover Removal & Installation in Section 02 Engine).
4. Using special tools MD-998719 (1) and MB-990767 (2) remove the camshaft timing belt pulley bolt. (Tighten: Camshaft timing belt pulley bolt to 120 N·m)

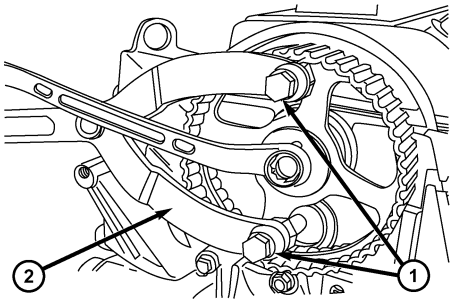

ltsm020056

5. Remove the camshaft timing belt pulley.
6. Remove the intake and exhaust rocker shaft assembly retaining bolts (2). (Tighten: Rocker shaft assembly bolts to 32 N·m)
7. Remove the rocker arm and rocker shaft assemblies.
   CAUTION: Before disassembling the rocker arm and rocker arm shaft assembly, install special tool MD-998443 (1) as shown in the illustration to prevent the hydraulic adjusters from dropping into the cylinder head.

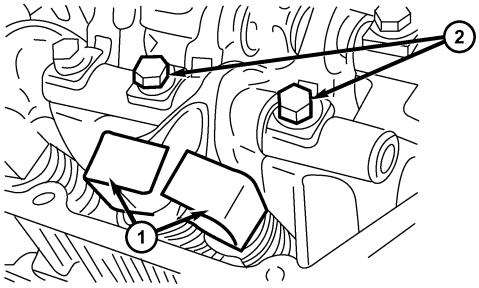

ltsm020082

8. Remove the camshaft position sensor electrical connector.
9. Remove the camshaft position sensor. (See Camshaft Position Sensor Removal & Installation in Section 03 Electronic Engine Controls).
10. Remove the camshaft thrust plate retaining bolt. (Tighten: Camshaft thrust plate bolt to 19 ± 3 N·m)
11. Remove the O-ring.
12. Remove the camshaft.
13. Installation is in the reverse order of removal.

Downloaded from www.Manualslib.com manuals search engine

Installation Notes:

- Use special tool MD-998442 (1), to depress the plunger several times to exhaust all air from the hydraulic adjuster.

CAUTION:
The check ball is especially soft, do not push the check ball too hard or the hydraulic adjuster will be damaged. When using special tool MD-998442 (1) the air will be relieved easily.

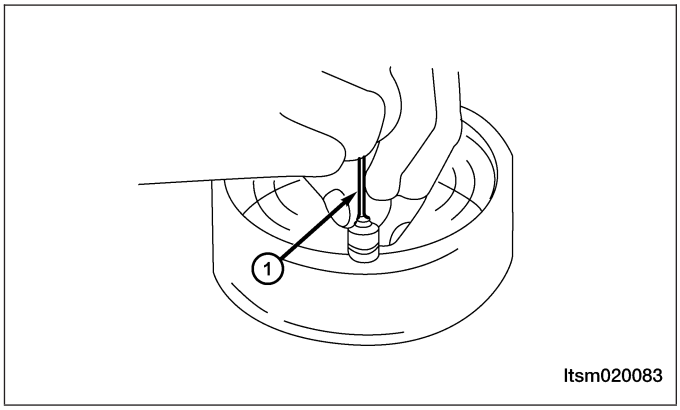

- Insert the hydraulic adjusters into the rocker arms. Insert special tool MD-998443 (1) to prevent dropping the hydraulic adjuster during installation.

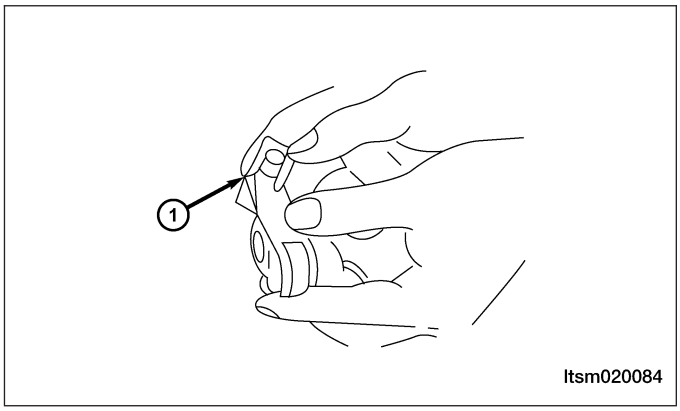

- Assemble the rocker shaft springs to the rocker shafts from the upper side of the shaft. Install the rocker shafts to the cylinder head and install the rocker shaft bolts and hand tighten only.

CAUTION:
The rocker shaft springs should be installed first and then install the rocker shaft bolts.

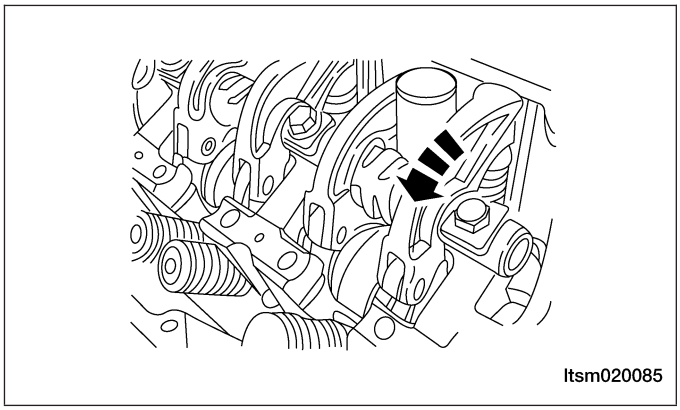

Downloaded from www.Manualslib.com manuals search engine

- Make sure that the rocker shafts are installed properly (1) as shown in the illustration.

CAUTION:
The oil hole in the rocker shafts should be aligned with the cylinder head to ensure correct installation position.

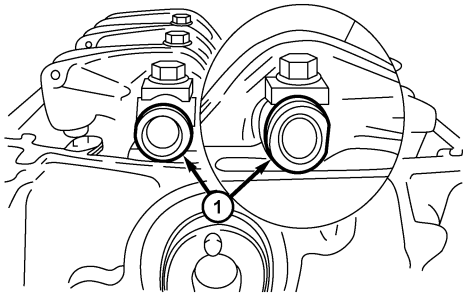

ltsm020086

- Using special tool MD-998713 (1), install the camshaft oil seal.

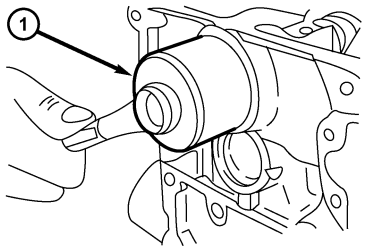

ltsm020087

Downloaded from www.Manualslib.com manuals search engine

Cylinder Head

Removal & Installation

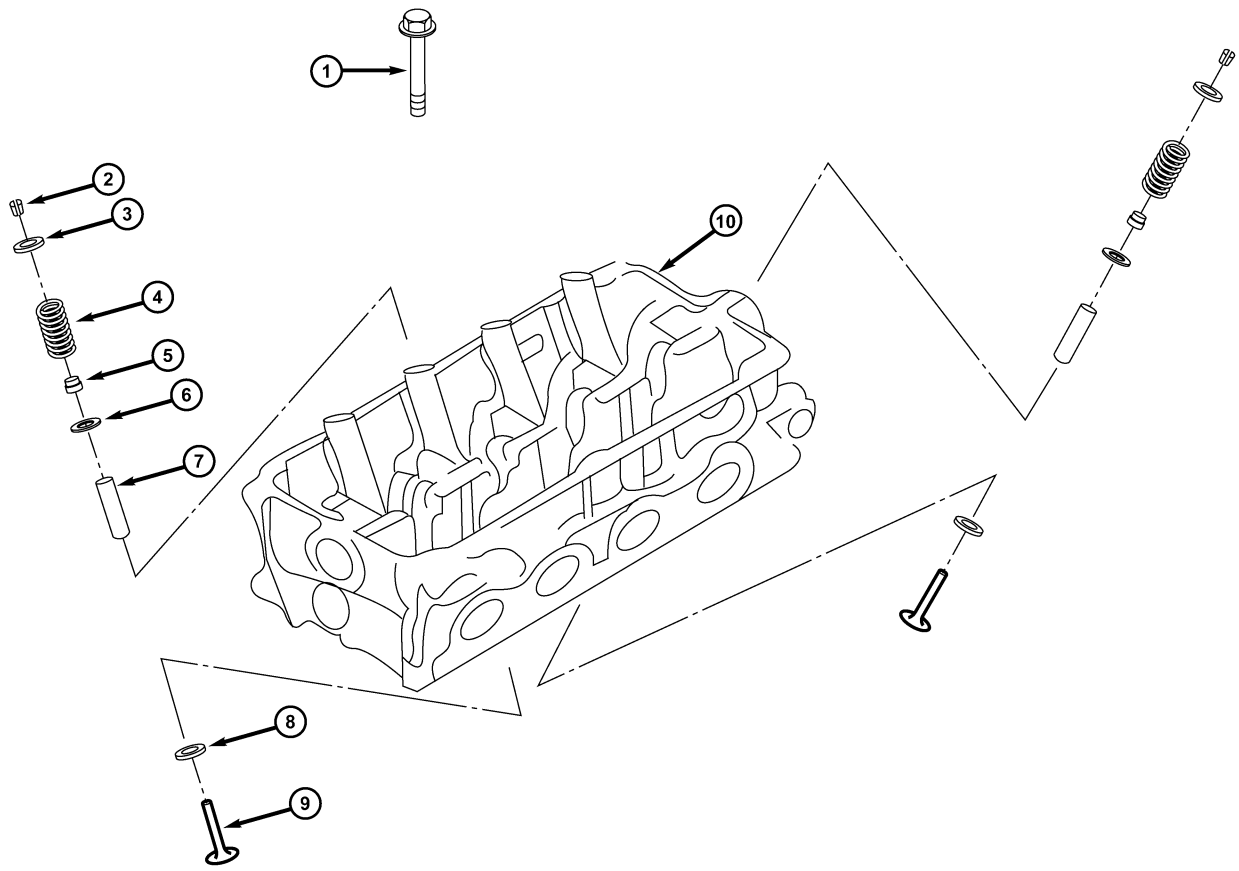

ltsm020090

1 - Cylinder Head Bolt	6 - Lower Valve Spring Retainer
2 - Valve Spring Locks	7 - Valve Guide
3 - Upper Valve Spring Retainer	8 - Valve Seat
4 - Valve Spring	9 - Valve
5 - Valve Oil Seal	10 - Cylinder Head

1. Drain the cooling system (See Cooling System Draining and Filling in Section 06 Cooling).
2. Remove the engine timing belt (See Engine Timing Belt Removal & Installation in Section 02 Engine).
3. Remove the cylinder head cover (See Cylinder Head Cover Removal & Installation in Section 02 Engine).
4. Remove the camshafts (See Camshaft Removal & Installation in Section 02 Engine).
5. Remove the intake manifold (See Intake Manifold Removal & Installation in Section 02 Engine).
6. Remove the exhaust manifold (See Exhaust Manifold Removal & Installation in Section 02 Engine).
7. Remove the water pipe and thermostat assembly.

Downloaded from www.Manualslib.com manuals search engine

8. Remove the cylinder head bolts in the sequence shown.

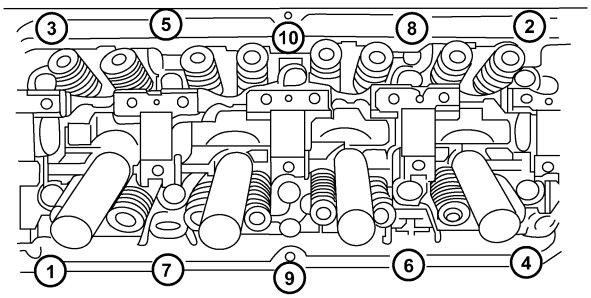

ltsm020237

9. Remove the cylinder head.
10. Remove the cylinder head gasket.
11. Inspect the cylinder head for warp using a straightedge and feeler gauge. Repair the cylinder head if necessary.
12. Installation is in the reverse order of removal.

Installation Notes:

- Ensure cylinder head bolt holes in the block are clean, dry (free of residual oil or coolant), and threads are not damaged.
- Do not reuse the cylinder head bolts. The new bolts should be examined before use. If the bolts are stretched, the bolts should be replaced.
- Position the new cylinder head gasket on the engine block with the part number facing up. Ensure gasket is seated over the locating dowels in the block.
- Before installing the bolts, the threads should be lightly coated with engine oil.
- The cylinder head bolts should be installed and torqued in the sequence shown.

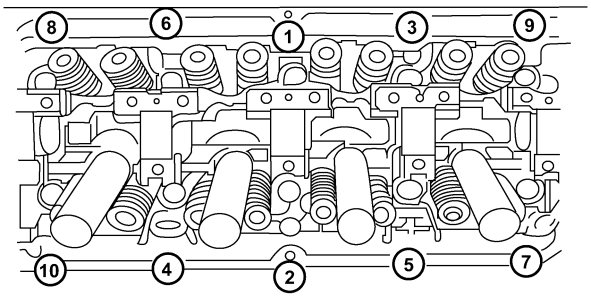

ltsm020097

- Tighten the cylinder head bolts in the following sequence.
  - 1st Step: Tighten the bolt to 78 N·m
  - 2nd Step: Completely loosen the bolt
  - 3rd Step: Retighten the bolt to 20 N·m
  - 4th Step: Tighten the bolt an additional 90°
  - 5th Step: Finish tightening the bolt an additional 90°

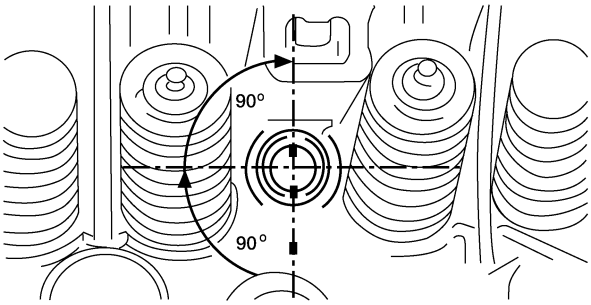

ltsm020098

Downloaded from www.Manualslib.com manuals search engine

Front Crankshaft Oil Seal

Removal & Installation

NOTE :
The following special tools are required to perform the repair procedure:
- MD-998778 - Crankshaft Belt Gear Puller
- MD-998781 - Flywheel Holder

1. Remove the accessory drive belt (See Accessory Drive Belt Removal & Installation in Section 02 Engine).
2. Remove the crankshaft vibration damper bolts (1). (Tighten: Crankshaft vibration damper bolts to 25 N·m)

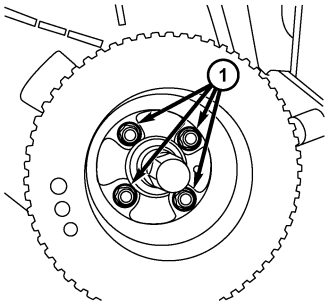

ltsm020153

3. Remove the engine timing belt (See Engine Timing Belt Removal & Installation in Section 02 Engine).
4. Install special tool MD-998781 (1), onto the flywheel.

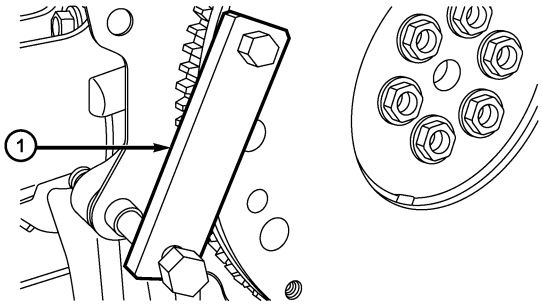

ltsm020051

5. Remove the crankshaft timing belt pulley bolt.
6. Using special tool MD-998778 (1), remove the crankshaft timing belt pulley from the crankshaft.

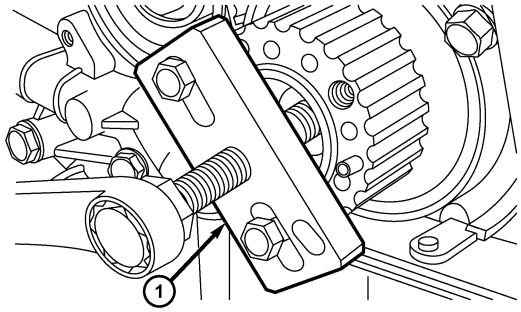

ltsm020052

7. Remove the key-way from the crankshaft.
8. Using an appropriate tool, remove the front crankshaft oil seal.

Downloaded from www.Manualslib.com manuals search engine

CAUTION:

Be careful not to damage the front cover seal surface while removing the seal.

9. Installation is in the reverse order of removal.

Installation Notes:

- Lubricate the new front seal with engine oil prior to assembly.
- Use the front crankshaft seal installer MD-998285 (1), to install the new seal.
- Tighten the crankshaft timing belt pulley bolt in the following sequence.
  - 1st step: Tighten the crankshaft timing belt pulley bolt to 130 N·m.
  - 2nd step: Tighten the bolt an additional 65°

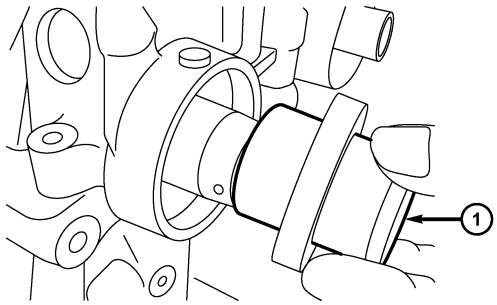

Itsm020220

Downloaded from www.Manualslib.com manuals search engine

Rear Crankshaft Oil Seal

Removal & Installation

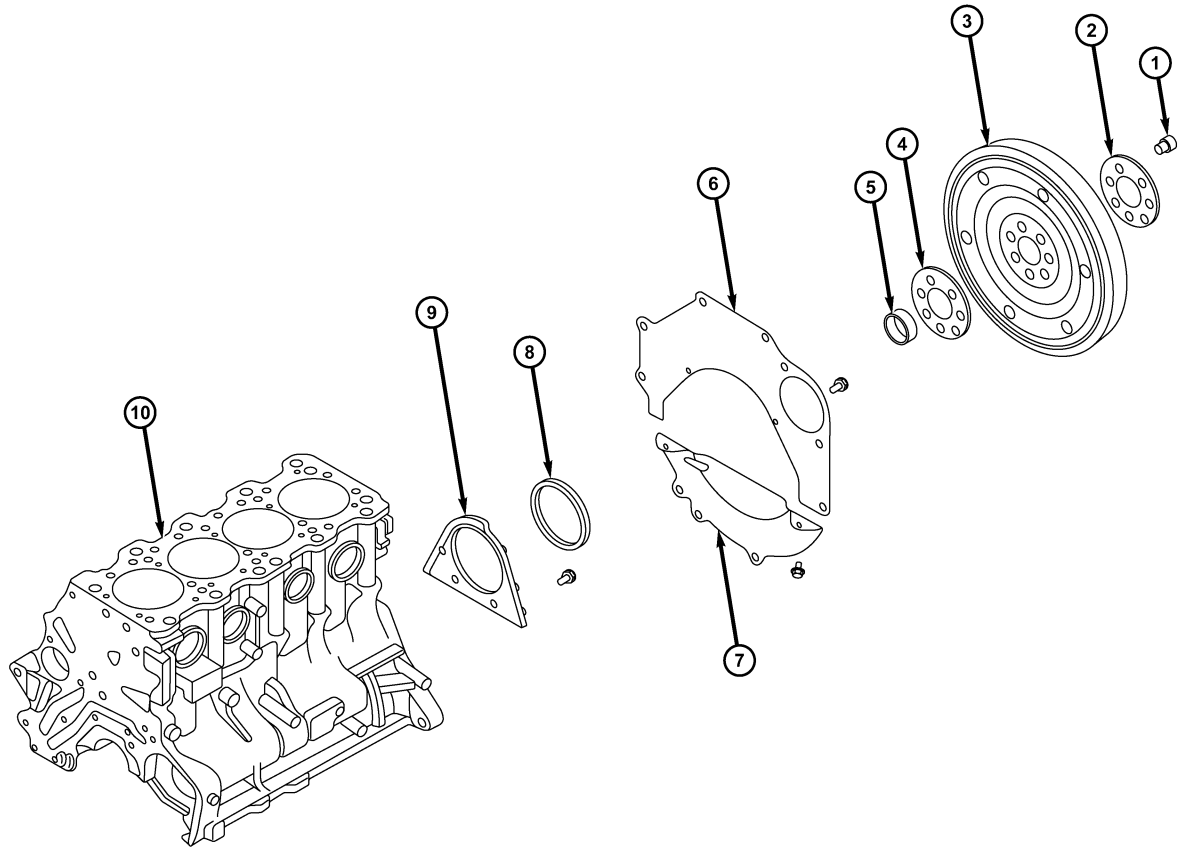

ltsm020195

1 - Flywheel Bolt	6 - Rear Engine Plate
2 - Rear Flywheel Flange	7 - Bell Housing Cover
3 - Flywheel	8 - Rear Crankshaft Oil Seal
4 - Front Flywheel Flange	9 - Rear Crankshaft Oil Seal Housing
5 - Crankshaft Bushing	10 - Cylinder Block

NOTE :
The following special tools are required to perform the repair procedure:
- MD-998776 - Crankshaft Rear Oil Seal Installer

1. Remove the transaxle assembly (See Transaxle Assembly Removal & Installation in Section 08 Transaxle & Transfer Case).

Downloaded from www.Manualslib.com manuals search engine

2. Install special tool MD - 998781 (1), on to the flywheel.

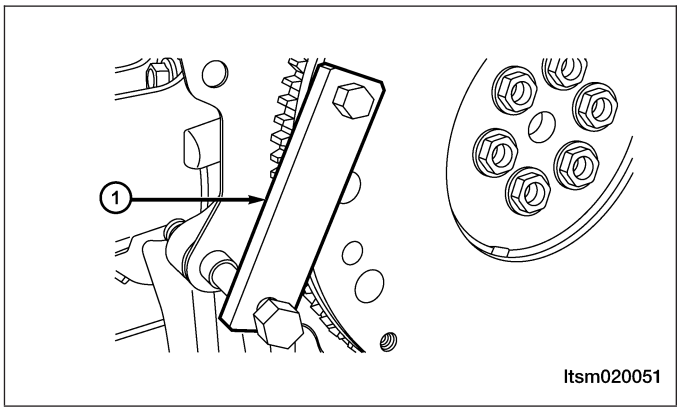

3. If equipped with automatic transaxle, remove the drive plate retaining bolts (1) and then remove the drive plate.
   (Tighten: Drive plate bolts to 75 N·m)

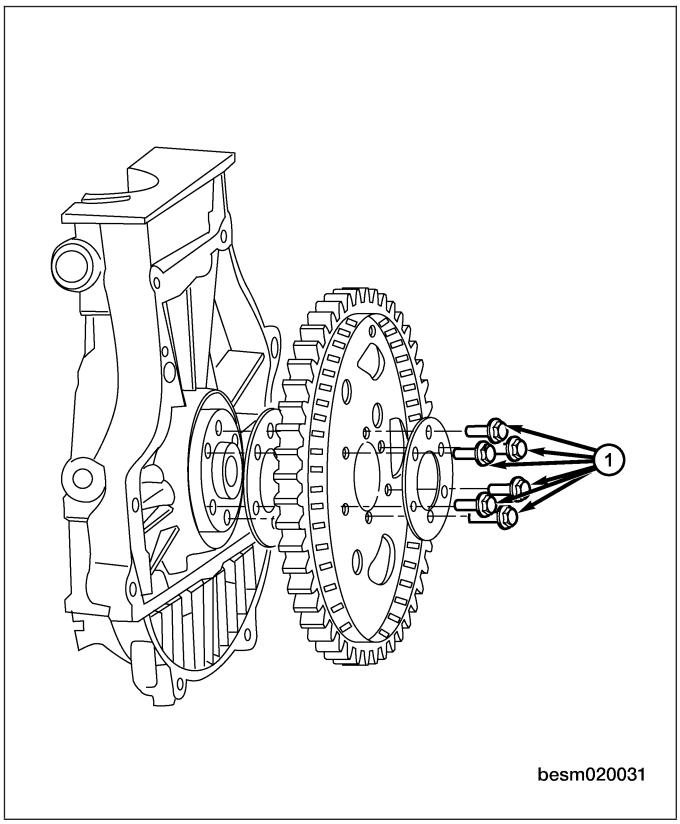

4. Remove the crankshaft rear oil seal using a suitable tool.
5. Installation is in the reverse order of removal.

Installation Notes:

- When installing seal, lubricate seal guide with clean engine oil.
- Position the seal over the rear crankshaft seal guide.

Downloaded from www.Manualslib.com manuals search engine

- Use special tool MD-998776 (2) and MD-990938 (1), to install the rear oil seal.
- Ensure that the lip of the seal is facing toward the crankcase during installation.

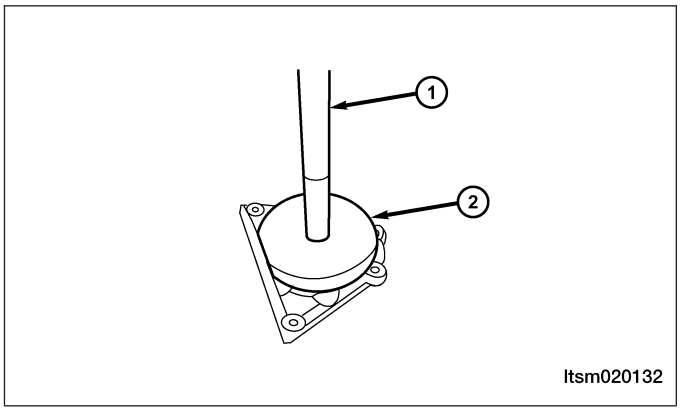

Engine Mounts

Removal & Installation - Left Mount

NOTE :
The following special tools are required to perform the repair procedure:
- Engine Hoist

1. Disconnect the negative battery cable.
2. Remove the air cleaner housing. (See Air Cleaner Housing Removal & Installation in Section 02 Engine).
3. Support the engine with the engine hoist.
4. Remove the engine left mount retaining bolts (2) and remove the engine left mount bracket bolts (1). (Tighten: Engine left mount bolts to 70 N·m)
5. Installation is in the reverse order of removal.

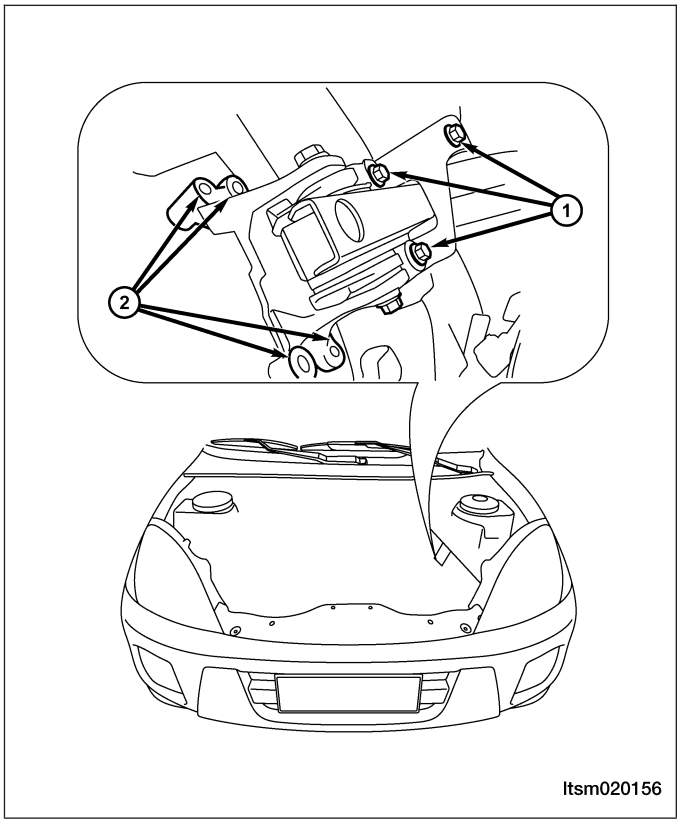

Downloaded from www.Manualslib.com manuals search engine

Removal & Installation - Right Mount

NOTE :
The following special tools are required to perform the repair procedure:
- Engine Hoist

1. Disconnect the negative battery cable.
2. Support the engine with the engine hoist.
3. Remove the engine right mount retaining bolts (2) and remove the engine right mount bracket bolts (1).
   (Tighten: Engine right mount bolts to 70 N·m)
4. Installation is in the reverse order of removal.

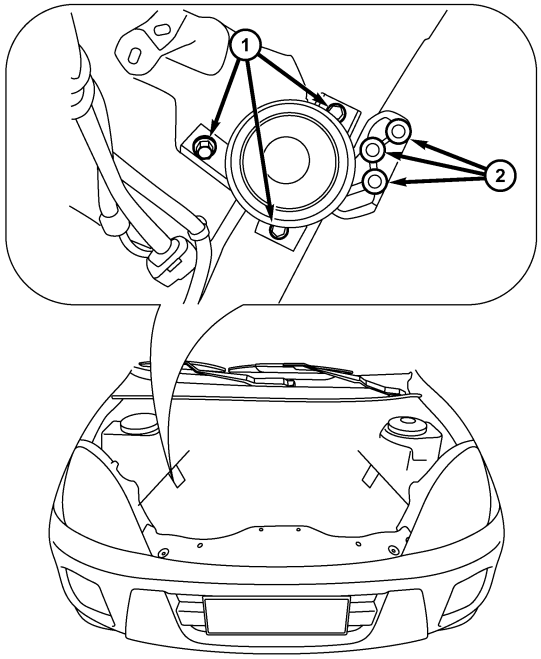

ltsm020155

Removal & Installation - Front Mount

NOTE :
The following special tools are required to perform the repair procedure:
- Engine Hoist

1. Disconnect the negative battery cable.
2. Support the engine with the engine hoist.
3. Remove the bolts (1) securing the front engine mount.
   (Tighten: Engine front mount bolts to 60 N·m)
4. Installation is in the reverse order of removal.

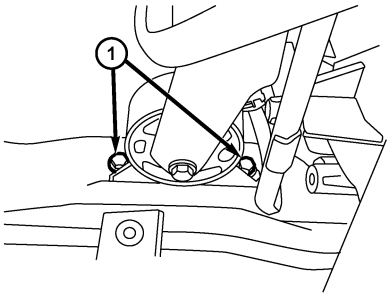

besm080035

Downloaded from www.Manualslib.com manuals search engine

Removal & Installation - Rear Mount

NOTE :
The following special tools are required to perform the repair procedure:
- Engine Hoist

1. Disconnect the negative battery cable.
2. Support the engine with the engine hoist.
3. Remove the engine rear mount retaining bolts (2) and remove the engine rear mount bracket bolts (1).
   (Tighten: Engine rear mount bolts to 60 N·m)
4. Installation is in the reverse order of removal.

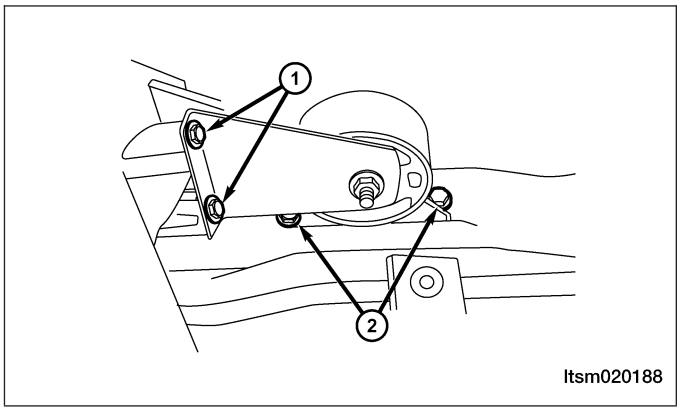

Engine Assembly

Removal & Installation

NOTE :
The following special tools are required to perform the repair procedure:
- Engine Hoist

NOTE :
The engine is removed with the transaxle as an assembly.

1. Relieve the fuel pressure (See Fuel Pressure Relief Procedure in Section 04 Fuel Delivery).
2. Disconnect the negative battery cable.
3. Remove the battery, battery hold downs, and battery tray (See Battery Removal & Installation in Section 05 Starting & Charging).
4. Remove the hood.
5. Discharge air conditioning system (See A/C System Evacuation and Recharge in Section 13 Heating & Air Conditioning).
6. Drain the cooling system (See Cooling System Draining and Filling in Section 06 Cooling).

WARNING!

Always allow the engine to cool before opening the cooling system. Do not loosen the coolant pressure relief cap when the engine is operating or the cooling system is hot. The cooling system is under pressure; steam and hot liquid can come out forcefully when the cap is loosened slightly. Failure to follow these instructions may result in serious personal injury.

7. Remove the coolant fan & radiator assembly (See Coolant Fan & Radiator Assembly Removal & Installation in Section 06 Cooling).
8. Remove the starter motor wiring.
9. Remove the negative battery cable from the engine.

Downloaded from www.Manualslib.com manuals search engine

10. Disconnect and remove the fuel line (2) at the fuel rail.
11. Remove the fuel pressure regulator retaining bolt (1) and set the fuel pressure regulator aside. (Tighten: Fuel pressure regulator bolt to 9 N·m)

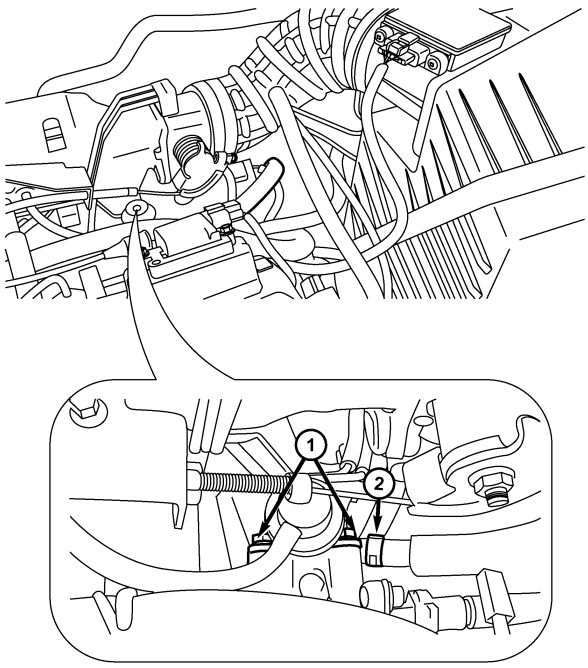

ltsm040006

12. Remove the air inlet hose and the air cleaner case assembly.

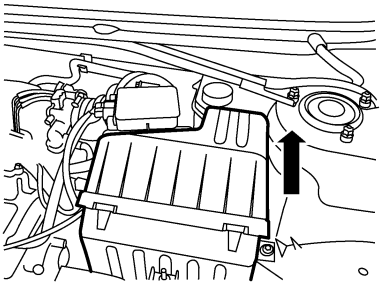
ltsm020160

13. Remove the accelerator cable bolt from the cylinder head.
14. Disconnect and remove the following electrical connectors:
    - Coolant temperature sensor
    - Crankshaft position sensor
    - Camshaft position sensor
    - Ignition coil
    - Four fuel injectors
    - Air flow sensor
    - Canister solenoid valve
    - EGR control solenoid valve
    - Throttle position sensor
    - A/C compressor
    - Oil pressure sensor
    - Power steering pump pressure switch
    - Generator
    - Upstream oxygen sensor
    - Knock sensor
    - Idle air control motor

Downloaded from www.Manualslib.com manuals search engine

15. Remove the pipe from the canister control valve.
16. Disconnect the heater hoses (1) on the vehicle.

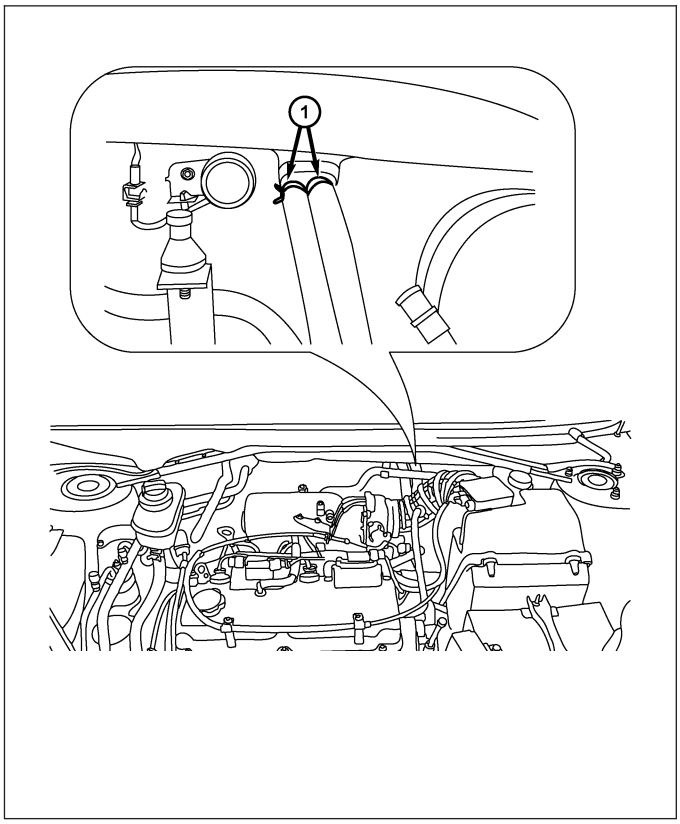

17. Remove the vacuum line from the brake booster.
18. Remove the dipstick.
19. Remove the accessory drive belt (See Accessory Drive Belt Removal & Installation in Section 02 Engine).
20. Remove the A/C compressor high and low pressure pipe bolts (1) & (2).

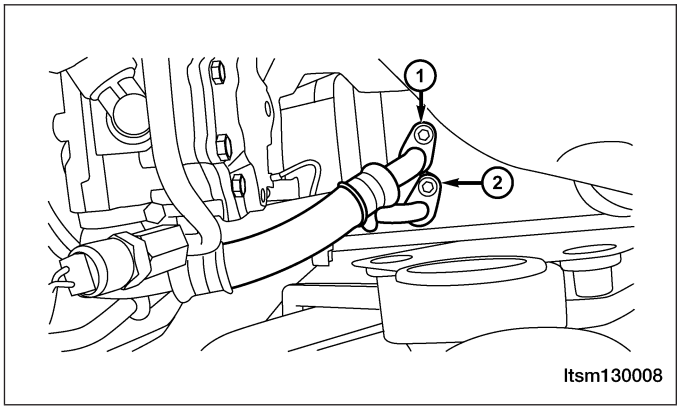

Downloaded from www.Manualslib.com manuals search engine

21. Disconnect the following automatic transaxle electrical connectors:
    - Output shaft sensor (1)
    - Input shaft sensor (2)
    - Electromagnetic valve switch connector (3)
    - Gear switch connector (5)
22. Disconnect the transaxle fluid lines (6) using a suitable tool.
23. Remove the shift cable (4) from the transaxle assembly.

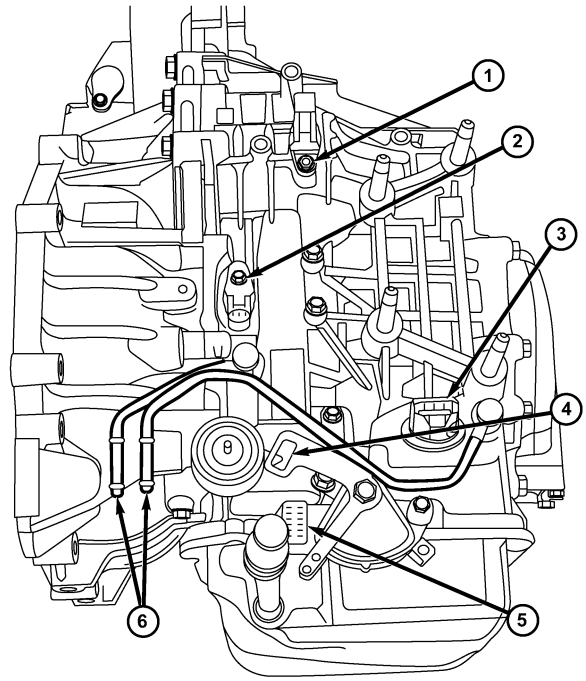

ltsm080153

24. Remove the catalytic converter to exhaust manifold bolts (1).
    (Tighten: Exhaust manifold bolt to 49 ± 5 N·m)

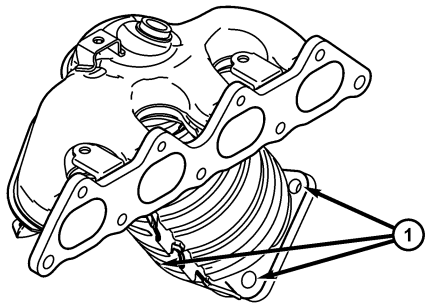

ltsm020189

25. Remove the front axle shaft (See Front Axle Shaft Removal & Installation in Section 09 Driveline & Axle).
26. Raise and support the vehicle.
27. Drain the engine oil.
28. Remove the power steering pump fluid line and set aside (See Power steering pump Removal & Installation in Section 11 Steering).
29. Lower the vehicle and install engine lift chain hangers.

Downloaded from www.Manualslib.com manuals search engine

30. Remove the bolts (1) securing the front engine mount.
(Tighten: Engine front mount bolt to 60 N·m)

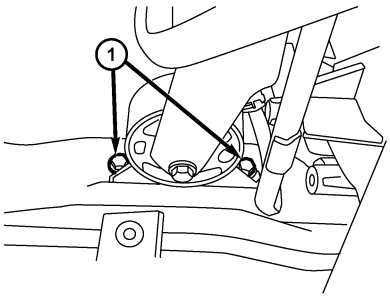

besm080035

31. Remove the bolts (2) securing the rear engine mount and the bolts (1) securing the mount bracket.
(Tighten: Engine rear mount bolt to 60 N·m)

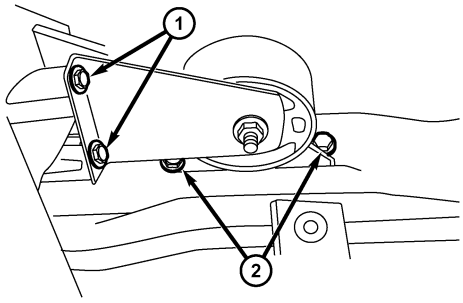

ltsm020188

32. Remove the bolts (2) securing the left transaxle mount and the bolts (1) securing the mount bracket.
(Tighten: Left transaxle mount bolt to 70 N·m)

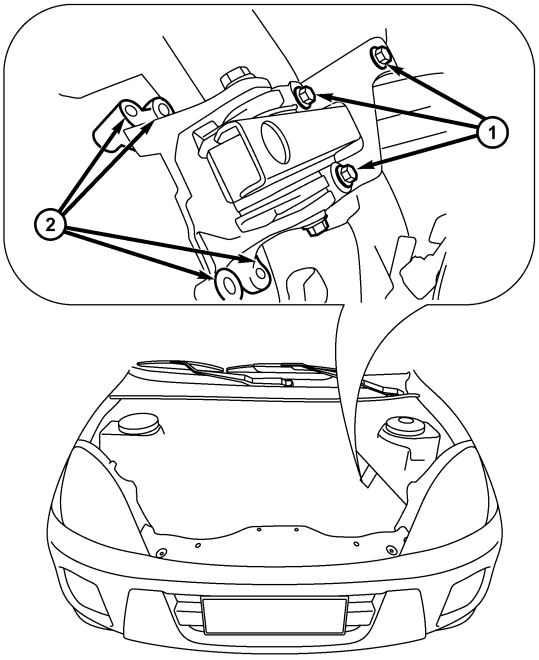

ltsm020156

Downloaded from www.Manualslib.com manuals search engine

33. Remove the bolts (2) securing the right engine mount and the bolts (1) securing the mount bracket.
    (Tighten: Engine right mount bolt to 70 N·m)
34. Remove the mount assembly.

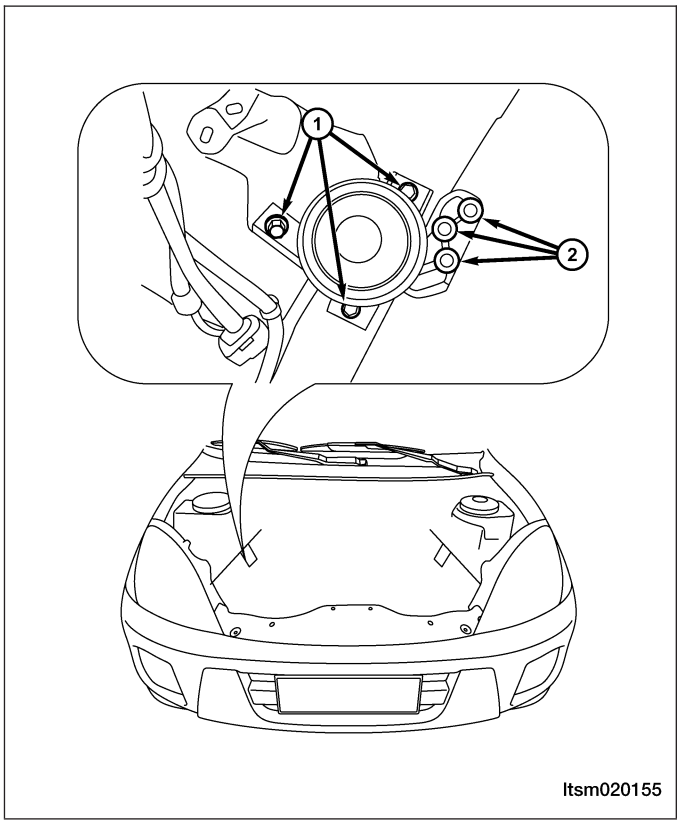

35. Verify all components between the engine and vehicle are disconnected.
36. Hoist the engine from vehicle.

CAUTION:

Verify all electrical connectors are disconnected prior to engine/transaxle removal.

37. Separate engine and transaxle.
    (Tighten: M12×1.75 bolts to 70 ± 5 N·m)
    (Tighten: M10×1.5 bolts to 50 ± 5 N·m)
38. Installation is in the reverse order of removal.

Downloaded from www.Manualslib.com manuals search engine

Engine Timing Belt

Removal & Installation

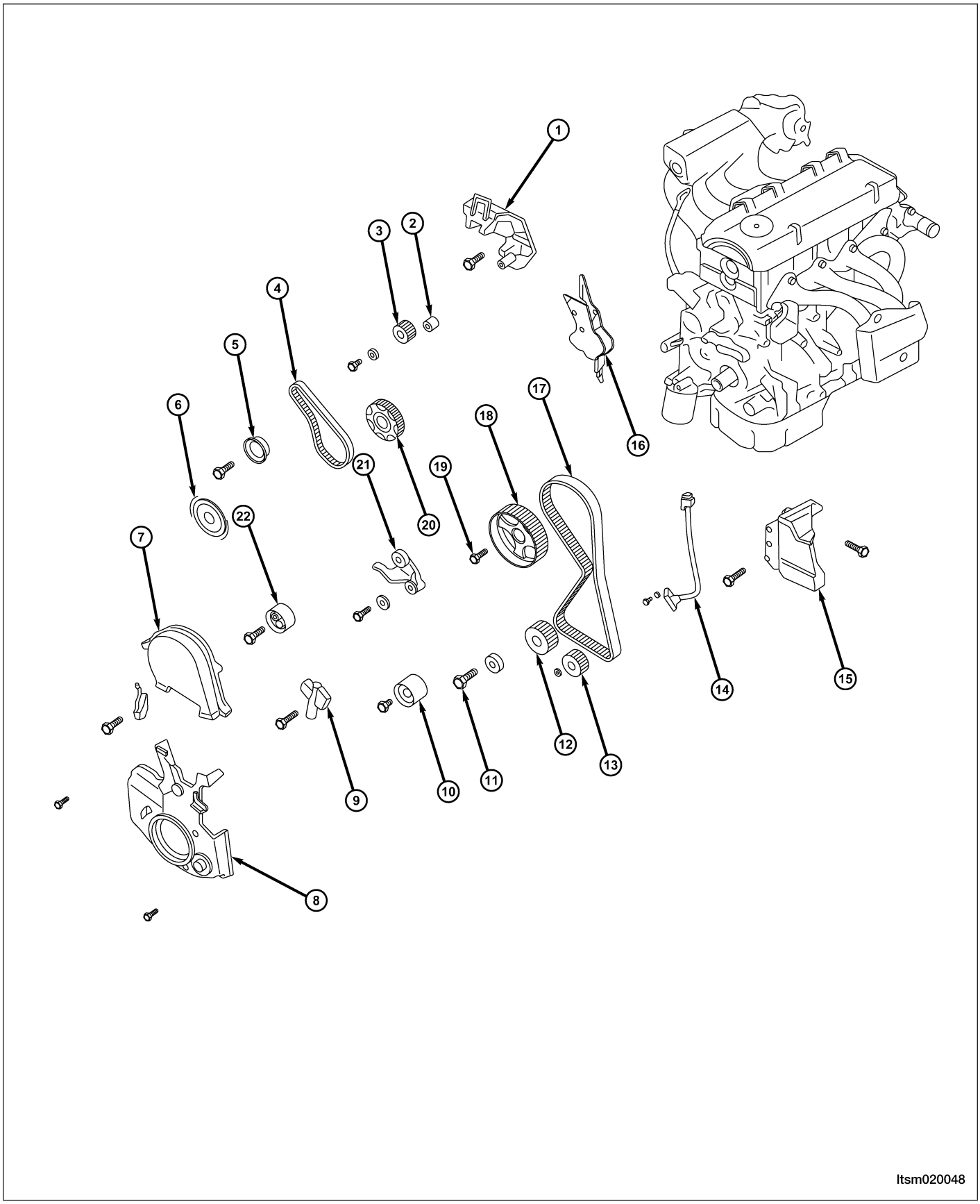

Downloaded from www.Manualslib.com manuals search engine

1 - Right Engine Mounting Bracket	12 - Crankshaft Timing Belt Pulley
2 - Spacer	13 - Lower Balance Shaft Pulley
3 - Upper Balance Shaft Pulley	14 - Crankshaft Position Sensor
4 - Upper Balance Shaft Timing Belt	15 - Power Steering Bracket
5 - Upper Balance Shaft Timing Belt Tensioner	16 - Timing Belt Rear Cover
6 - Crankshaft Sensing Blade	17 - Timing Belt
7 - Upper Timing Belt Cover	18 - Camshaft Timing Pulley
8 - Lower Timing Belt Cover	19 - Camshaft Pulley Bolt
9 - Timing Belt Automatic Tensioner	20 - Crankshaft Upper Balance Shaft Pulley
10 - Idler Pulley	21 - Tensioner Arm
11 - Crankshaft Bolt	22 - Tensioner Pulley

NOTE :
The following special tools are required to perform the repair procedure:
- MB-990767 - Timing Belt Spanner Wrench
- MD-998785 - Timing Belt Gear Holder
- MD-998767 - Automatic Tensioner Socket

1. Drain the cooling system (See Cooling System Draining and Filling in Section 06 Cooling).

WARNING!

Always allow the engine to cool before opening the cooling system. Do not loosen the coolant pressure relief cap when the engine is operating or the cooling system is hot. The cooling system is under pressure; steam and hot liquid can come out forcefully when the cap is loosened slightly. Failure to follow these instructions may result in serious personal injury.

2. Attach an engine hoist to the engine.
3. Raise the engine with the engine hoist, just enough to support the engine.

Downloaded from www.Manualslib.com manuals search engine

4. Remove the engine right mount bolts (2) and the engine right mount bracket bolts (1).
   (Tighten: Engine right mount bolts to 70 N·m)
5. Remove the accessory drive belts (See Accessory Drive Belt Removal & Installation in Section 02 Engine).

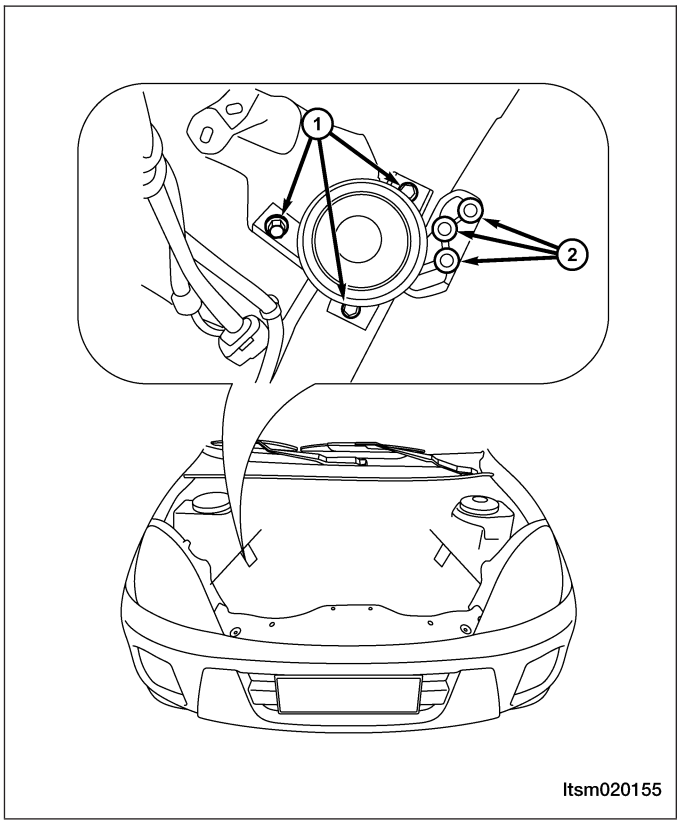

6. Remove the crankshaft vibration damper bolts (1).
   (Tighten: Crankshaft vibration damper bolts to 25 N·m)

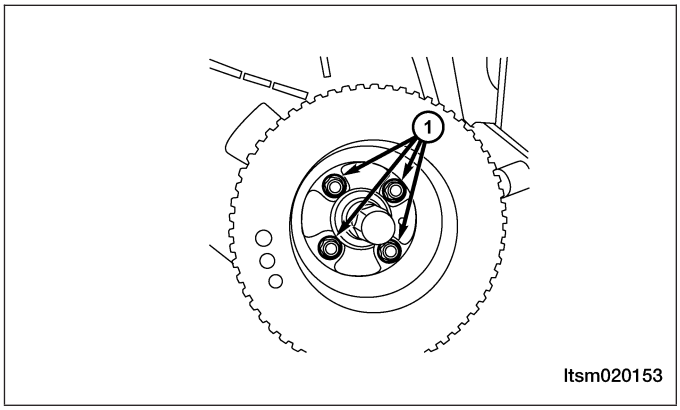

7. Remove the timing belt upper cover.
   (Tighten: Timing belt upper cover bolts to 11 N·m)
8. Remove the timing belt lower cover.
   (Tighten: Timing belt lower cover bolts to 11 N·m)
9. Loosen the timing belt tensioning pulley bolt.
10. Remove the timing belt.

    NOTE: Remember the rotation direction of the timing belt in order to avoid any error when reassembling.

Downloaded from www.Manualslib.com manuals search engine

11. Installation is in the reverse order of removal.

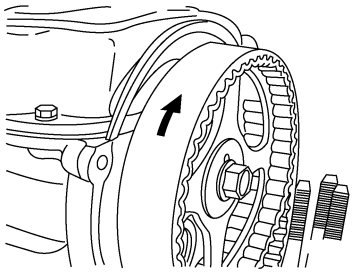

ltsm020049

Installation Notes:

- Rotate the camshaft pulley and align the timing marks (1) with the cylinder head cover.

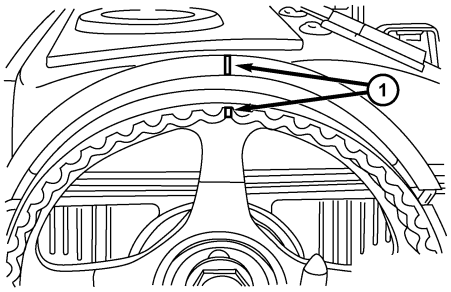

ltsm020073

- Rotate the crankshaft pulley and align the timing marks (1) with the front cover.

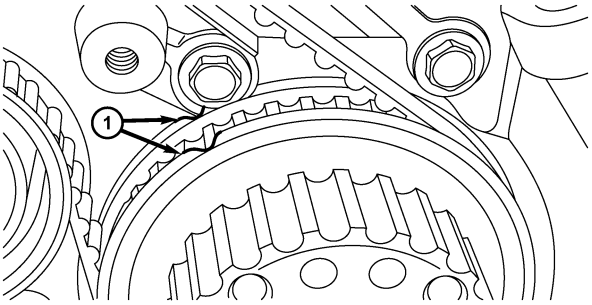

ltsm020074

Downloaded from www.Manualslib.com manuals search engine

- Rotate the lower balance shaft pulley and align the timing marks (1) with the front cover.

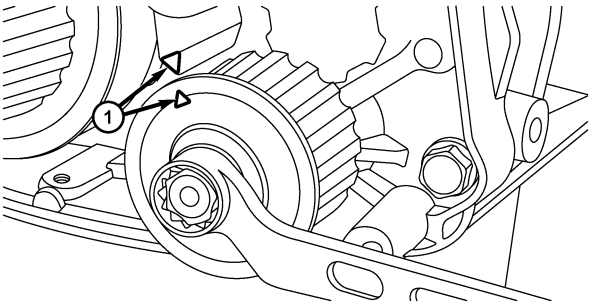

ltsm020075

- Remove the plug from the cylinder block and then insert a holder (1) (8 mm diameter) into the hole.

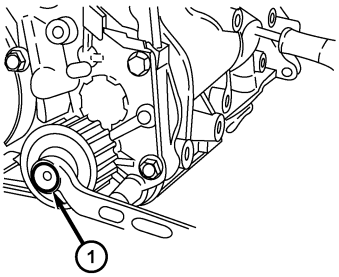

ltsm020174

NOTE :
If the holder can be inserted more than 60 mm, then the timing marks are aligned. If the holder could not be inserted more than 20-25 mm, the lower balance shaft pulley should be rotated one revolution and the timing marks should be then be aligned. Keep the holder installed until the installation of the timing belt is complete.

- Make sure all timing marks are aligned properly.
- Install the timing belt.

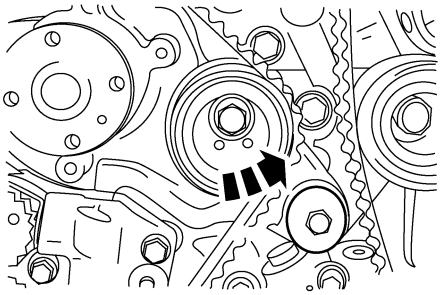

ltsm020076

Downloaded from www.Manualslib.com manuals search engine

- Using special tool MD-998767 (1) and a torque wrench, adjust the timing belt tensioner.

ltsm020078

- Measure distance “A” between the tensioner arm and the automatic tensioner.
  - Standard distance is 3.84 mm

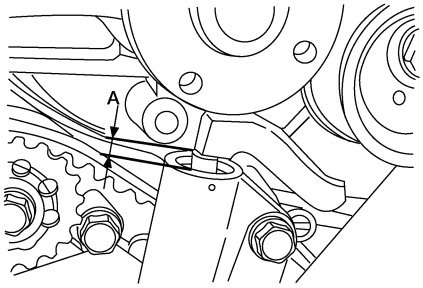

ltsm020080

Inspection

1. Inspect the timing belt back rubber for signs of aging and glistening.

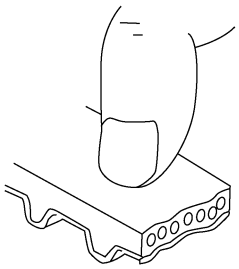

ltsm020057

Downloaded from www.Manualslib.com manuals search engine

2. Inspect the timing belt for the following:
   - Cracks in the back rubber (1).
   - Cracks and stripping in the canvas (2).
   - Cracks in the grooves (3).
   - Cracks in the side of the belt (4).

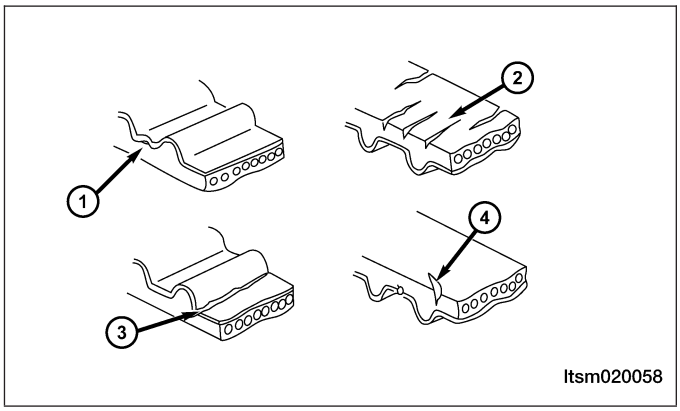

3. Inspect the timing belt (1) for abnormal abrasion in the side of the belt (2).

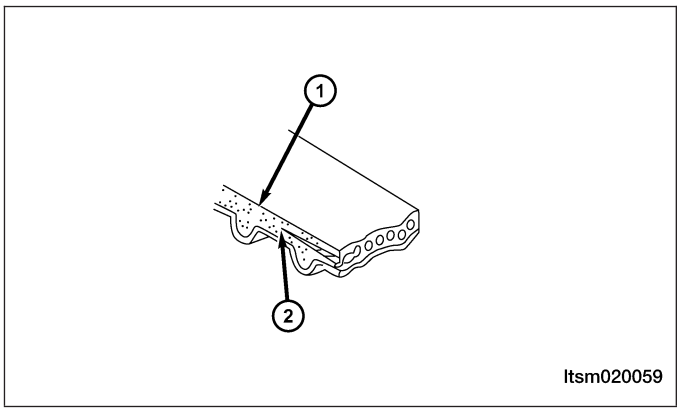

4. Inspect the timing belt for abnormal abrasion (2) or teeth missing (1) from the belt.

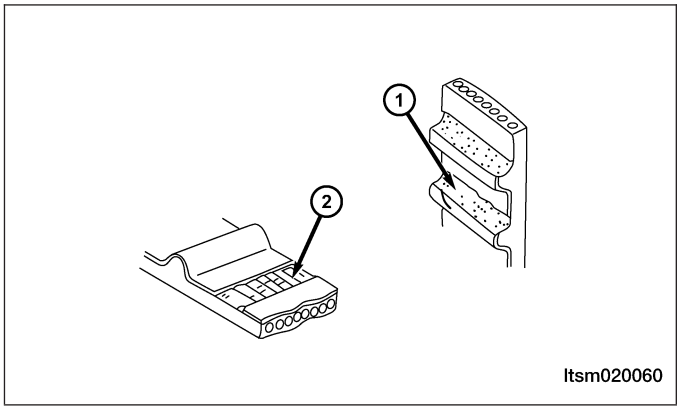

Downloaded from www.Manualslib.com manuals search engine

Timing Belt Automatic Tensioner

Removal & Installation

NOTE :
The following special tools are required to perform the repair procedure:
- MD-998767 - Automatic Tensioner Socket

1. Remove the engine timing belt (See Engine Timing Belt Removal & Installation in Section 02 Engine).
2. Remove the timing belt automatic tensioner bolts (1).
   (Tighten: Timing belt automatic tensioner bolts to 24 N·m)

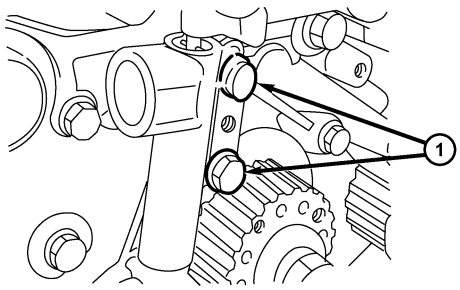

Itsm020233

3. Installation is in the reverse order of removal.

Installation Notes:
- Perform the following to prepare the automatic tensioner for installation:
  - Slowly close the vise jaws until the rod hole (1) and housing hole (2) are aligned.
  - Insert a steel wire (1.4 mm diameter) into the aligned hole.
  - Remove the automatic tensioner from the vise.

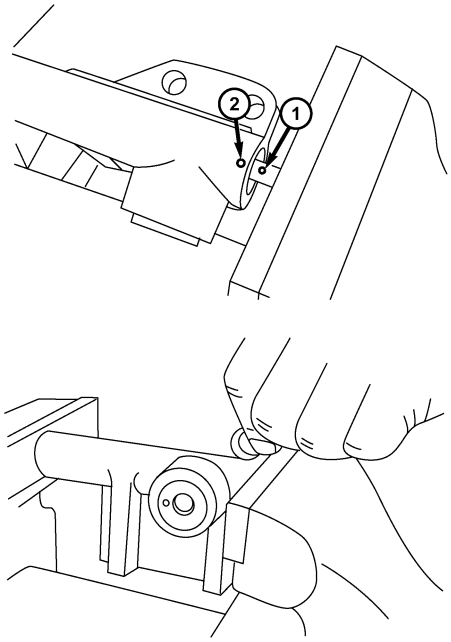

Itsm020070

- The automatic tensioner is now ready to be installed on the engine.

Downloaded from www.Manualslib.com manuals search engine

Inspection

1. Inspect the automatic tensioner for any leaks. Replace the tensioner if any leaks are found.
2. Inspect the automatic tensioner for signs of abrasion at the end of the rod. Replace the tensioner if any abrasions are found.
3. Inspect the length of the rod. If the rod length does not comply with the standard length, replace the tensioner (standard rod length is 12 mm).

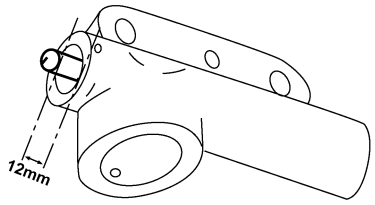

ltsm020061

4. Using a calibrated force, press the end of the rod using 98 - 196 N·m and measure the rod displacement. If the rod displacement is 1 mm larger than the standard, replace the tensioner (standard measurement is ≤ 1 mm).

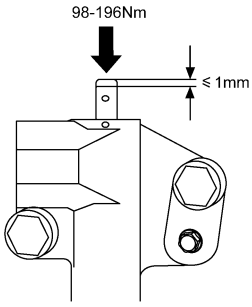

ltsm020214

5. Assemble the automatic tensioner with a soft jawed vise (1).
   CAUTION: Use an appropriate pad (3) to protect the tensioner bolt (2) from the jaws of the vise.
6. Rotate the handle of the vise to push the rod of the automatic tensioner into the tensioner. If the rod is easy to push in, replace the automatic tensioner. The rod should have some resistance when you push the rod into the tensioner.

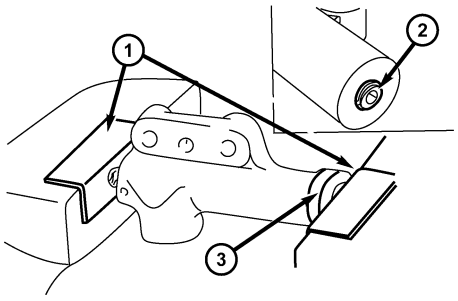

ltsm020062

Downloaded from www.Manualslib.com manuals search engine

Upper Balance Shaft Timing Belt

Removal & Installation

NOTE :
The following special tools are required to perform the repair procedure:
- MD-998778 - Crankshaft Pulley Puller
- MD-998781 - Flywheel Holder
- MD-998785 - Upper Balance Shaft Pulley Holder

1. Remove the engine timing belt (See Engine Timing Belt Removal & Installation in Section 02 Engine).
2. Using special tool MD-998781 (1), attach the tool to the flywheel.

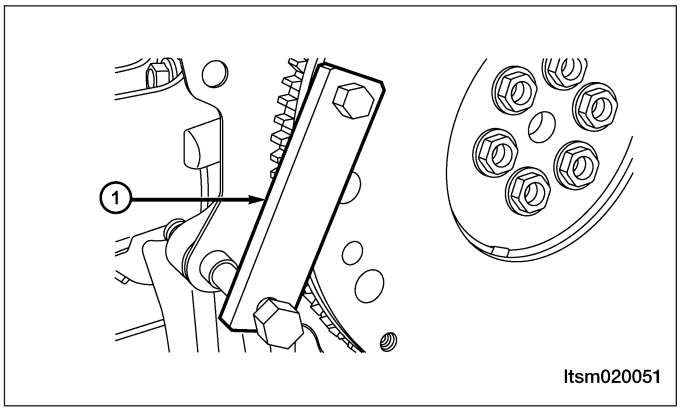

3. Remove the crankshaft pulley bolt.
   (Tighten: Crankshaft pulley bolt to 120 N·m)
4. Using special tool MD-998778 (1), remove the crankshaft pulley.

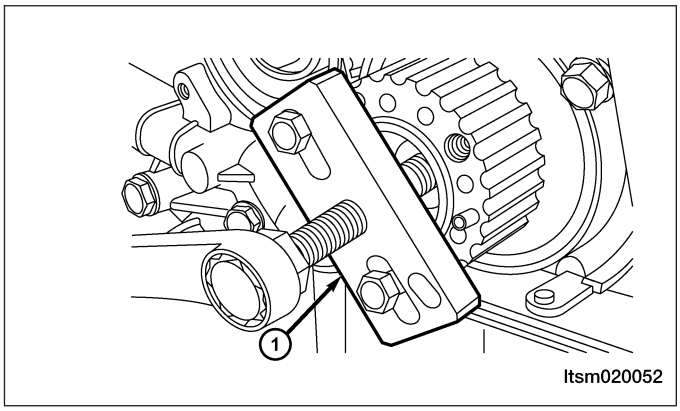

5. Remove the upper balance shaft timing belt.
   NOTE: Remember the rotation direction of the timing belt in order to avoid any error when reassembling.
6. Installation is in the reverse order of removal.

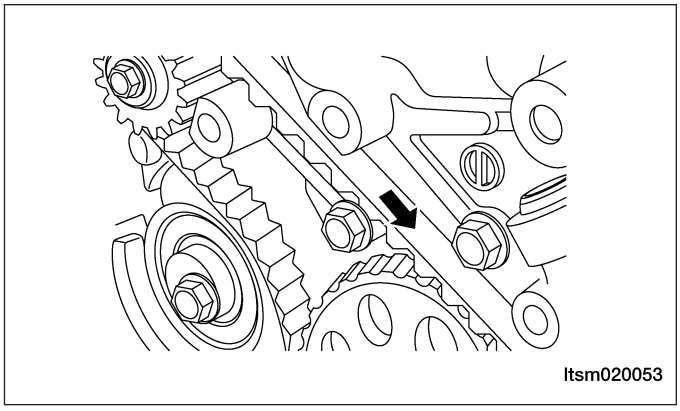

Downloaded from www.Manualslib.com manuals search engine

Installation Notes:

- Align the timing marks on the crankshaft pulley (2) and the upper balance shaft pulley with the timing marks on the front engine cover (1).
- Make sure all timing marks are aligned properly.
- Install the timing belt.
- Make sure that the belt tensioner position is as shown (3 & 4).

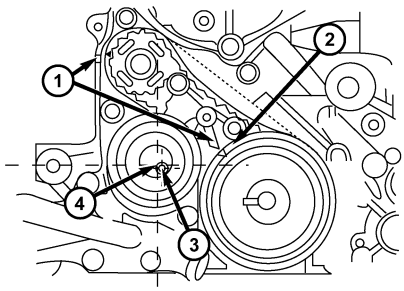

ltsm020066

- While applying finger pressure to the belt tensioner in the direction of the arrow, tighten the tensioner bolt to 35 N·m.

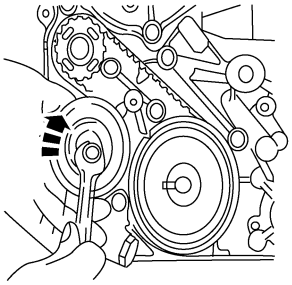
ltsm020067

CAUTION:

Do not allow the belt tensioner to move while tightening the bolt, if the tensioner moves it could cause the belt to be overtightened.

- Ensure that the timing marks (1) have not moved, and are still in alignment.
- Press the center of the timing belt with an index finger and measure the belt deflection (standard deflection is 5-7 mm).
- If the belt deflection is not within specifications, adjust if necessary.

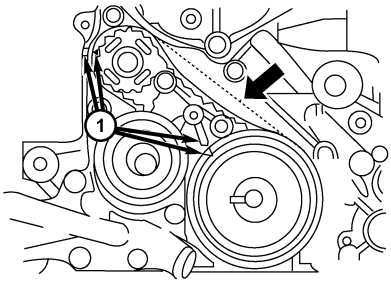

ltsm020068

- Reinstall the engine timing belt (See Engine Timing Belt Removal & Installation in Section 02 Engine).

Downloaded from www.Manualslib.com manuals search engine

Exhaust Manifold

Removal & Installation

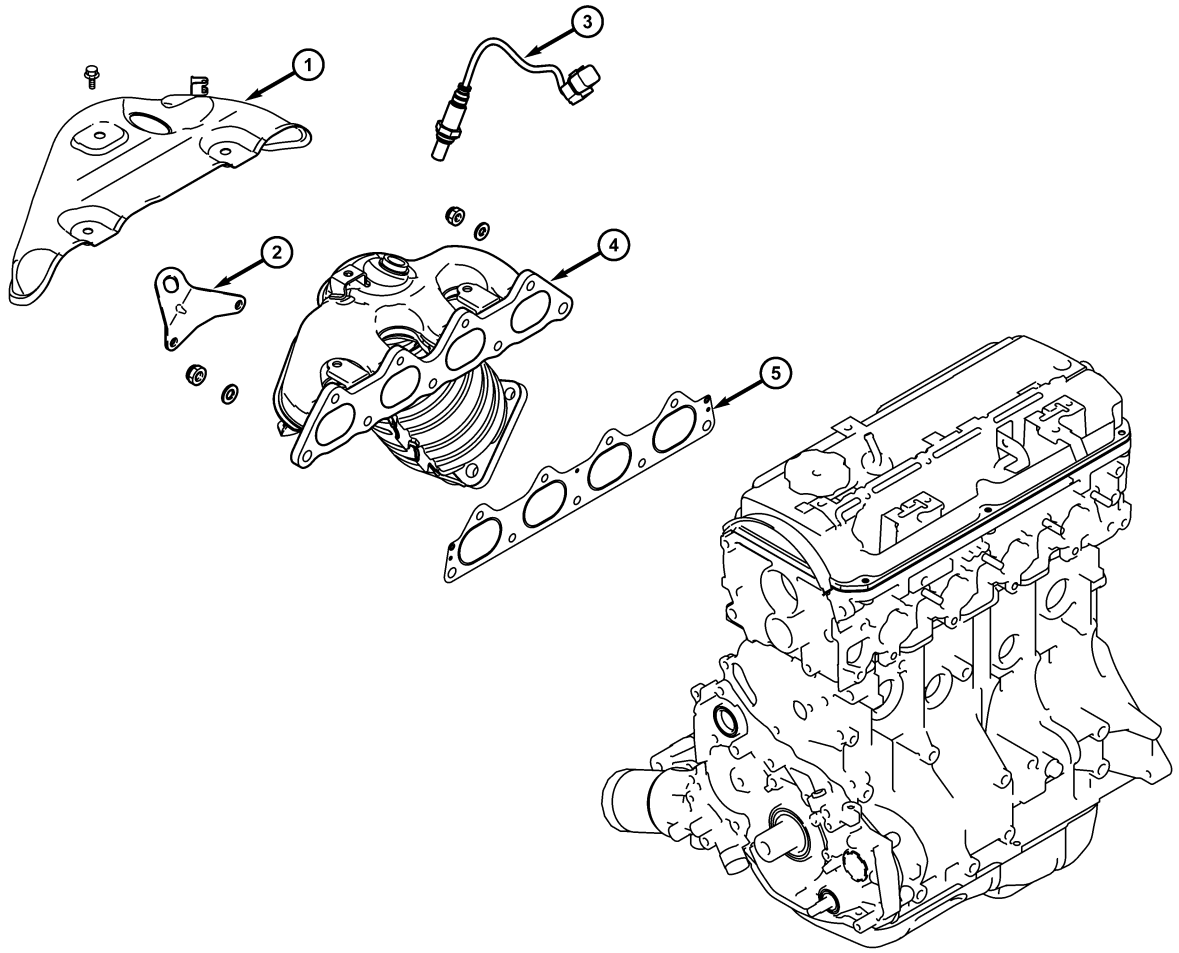

ltsm020179

1 - Exhaust Manifold Heat Shield	4 - Exhaust Manifold
2 - Engine Hanger	5 - Exhaust Manifold Gasket
3 - Oxygen Sensor	

1. Remove the bolts attaching the exhaust manifold heat shield.
   (Tighten: Exhaust manifold heat shield bolts to 14 N·m)
2. Remove the exhaust manifold heat shield.
3. Remove the three bolts securing the exhaust manifold to the catalytic converter assembly.
   (Tighten: Exhaust manifold to catalytic converter bolts to 49 ± 5 N·m)
4. Disconnect the catalytic converter assembly from the manifold.
5. Remove the exhaust manifold nuts.
   (Tighten: Exhaust manifold nuts to 29 ± 3 N·m)
6. Remove the exhaust manifold from the cylinder head.
7. Remove and discard exhaust manifold gasket.

Downloaded from www.Manualslib.com manuals search engine

8. Installation is in the reverse order of removal.

Installation Notes:

- Clean all surfaces of manifold and cylinder head.
- Install a new exhaust manifold gasket during installation.

Intake Manifold

Removal & Installation

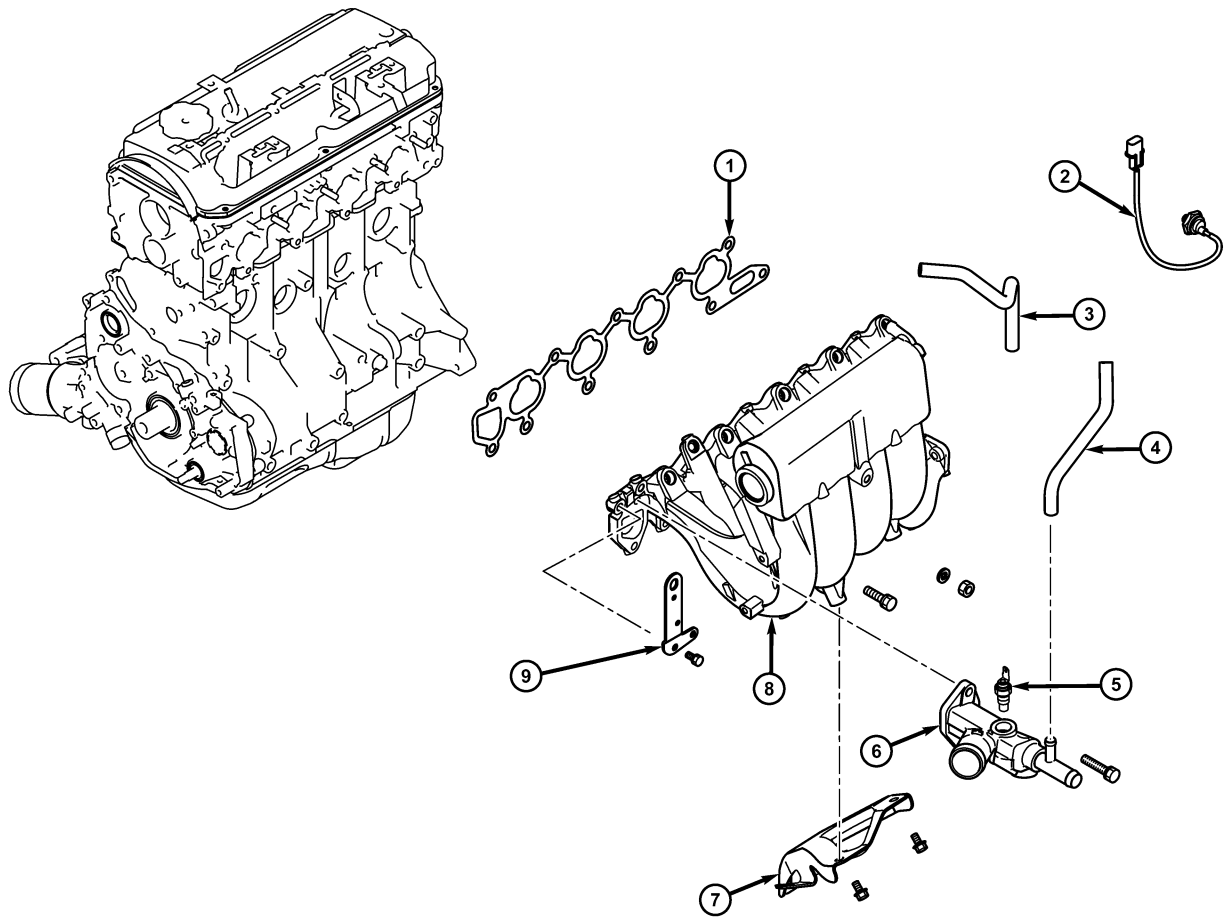

ltsm020178

1 - Inlet Manifold Gasket	6 - Coolant Outlet Fitting
2 - Knock Sensor	7 - Intake Manifold Support Bracket
3 - Coolant Hose	8 - Intake Manifold
4 - Coolant Hose	9 - Engine Hanger
5 - Coolant Temperature Sensor	

1. Disconnect the negative battery cable.

Downloaded from www.Manualslib.com manuals search engine

2. Remove the accelerator cable retaining bolt from the intake manifold.
   (Tighten: Accelerator cable retaining bolt to 10 N·m)
3. Remove the PCV hose (1).

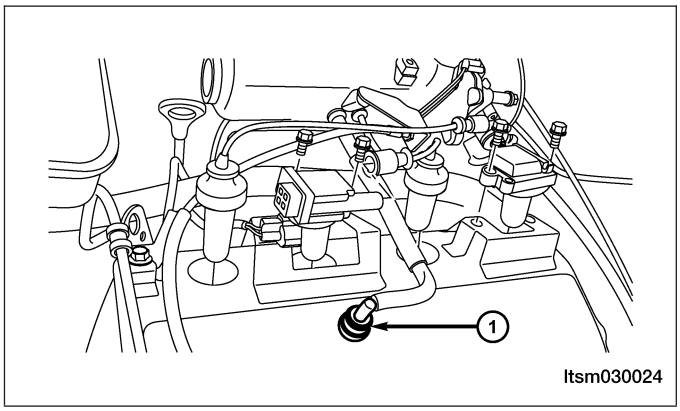

4. Disconnect the four fuel injector electrical connectors (1).

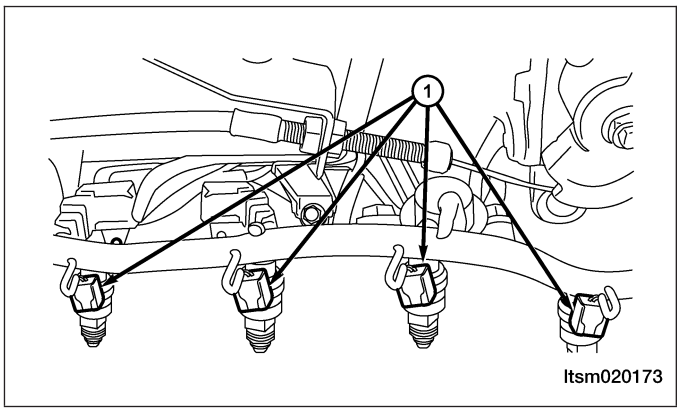

5. Loosen the clamp between the air intake hose and the air cleaner.
6. Loosen the clamp between the air intake hose and the throttle body and then remove the intake pipe.
7. Remove the fuel rail bracket bolts.
   (Tighten: Fuel rail bracket bolts to 11 N·m)
8. Remove the fuel rail with the fuel injectors and set aside.
9. Remove the fuel injector O-rings.
10. Remove the screws securing the vacuum valve bracket to the intake manifold.
11. Set aside the vacuum valve and pipe.
12. Disconnect the intake manifold electrical harness, and vacuum hose.

Downloaded from www.Manualslib.com manuals search engine

13. Remove the intake manifold bracket bolts (1). (Tighten: Intake manifold bracket bolts to 14 ± 1 N·m)

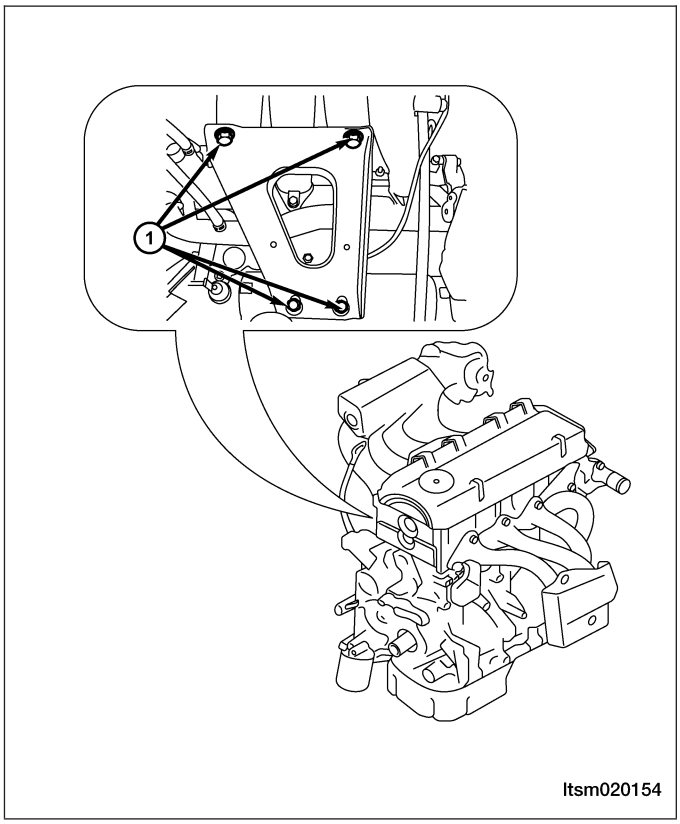

14. Remove the intake manifold retaining nuts. (Tighten: Intake manifold retaining nuts to 49 ± 5 N·m)
15. Remove the intake manifold from the cylinder head.
16. Remove and discard the intake manifold gasket.
17. Installation is in the reverse order of removal.

Installation Notes:

- Clean all surfaces of the manifold and cylinder head.
- Install a new intake manifold gasket during installation.
- Install new O-rings on the fuel injectors.

Downloaded from www.Manualslib.com manuals search engine

Upper Balance Shaft

Removal & Installation

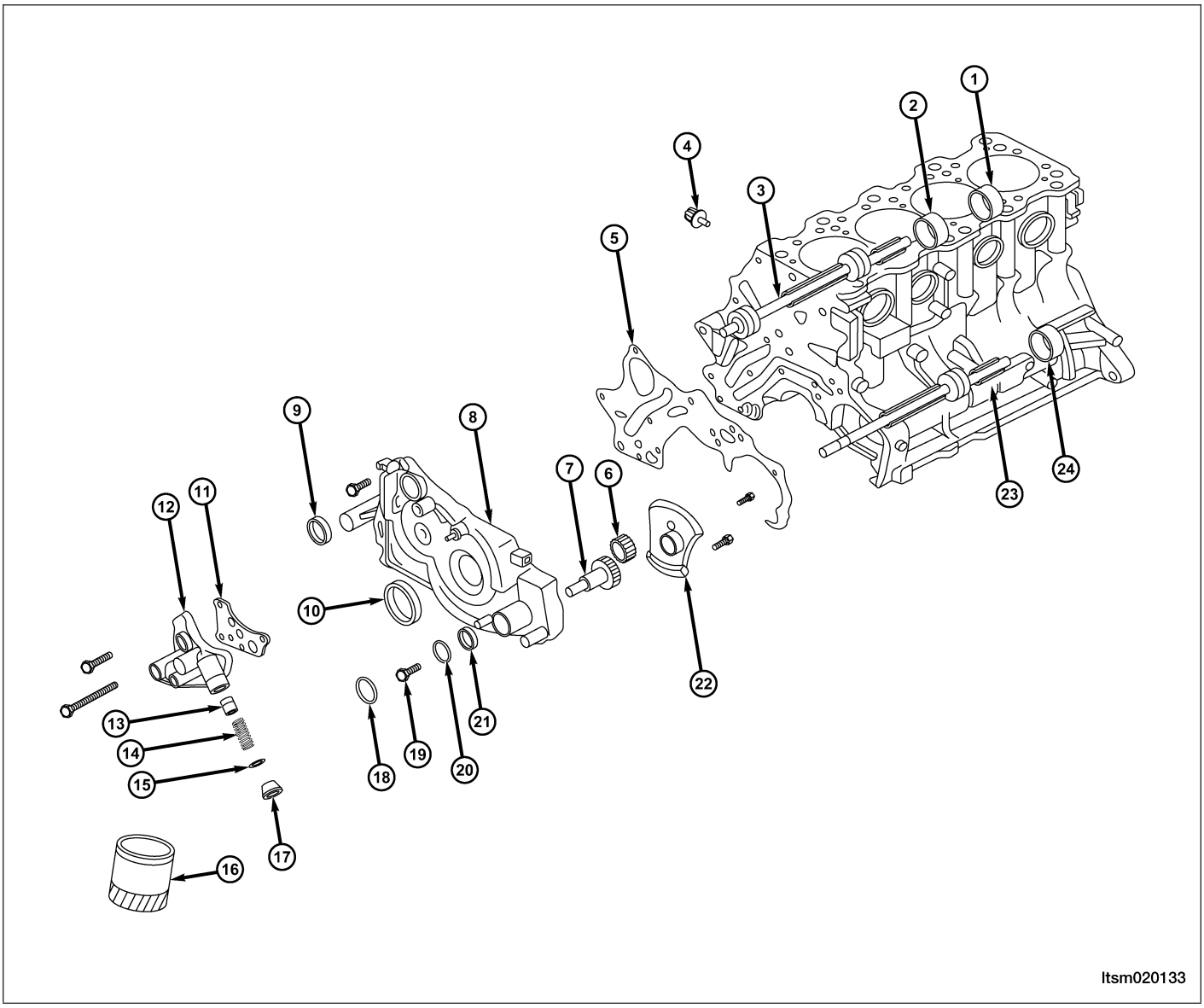

1 - Upper Balance Shaft Rear Bearing	13 - Pressure-Relief Valve
2 - Upper Balance Shaft Front Bearing	14 - Pressure Relief Spring
3 - Upper Balance Shaft	15 - Pressure-Relief Valve Seal
4 - Oil Pressure Switch	16 - Oil Filter
5 - Front Cover Gasket	17 - Pressure Relief Valve Plug
6 - Oil Pump Driven Gear	18 - Plug
7 - Oil Pump Drive Gear	19 - Front Cover Bolt
8 - Front Cover	20 - O-Ring
9 - Upper Balance Shaft Oil Seal	21 - Oil Pump Oil Seal
10 - Crankshaft Front Oil seal	22 - Oil Pump Cover
11 - Oil Filter Adapter Gasket	23 - Lower Balance Shaft
12 - Oil Filter Adapter	24 - Lower Balance Shaft Rear Bearing

Downloaded from www.Manualslib.com manuals search engine

NOTE :
The following special tools are required to perform the repair procedure:
- MB-991603 - Balance Shaft Bearing Puller Limiter
- MD-998162 - Plug Spanner
- MD-998371 - Balance Shaft Bearing Puller
- MD-998372 - Balance Shaft Bearing Puller
- MD-998375 - Crankshaft Front Oil Seal Installer
- MD-998705 - Balance Shaft Bearing Installer
- MD-998727 - Oil Pan Remover
- MD-998783 - Plug Spanner Fixer
- MB-991828 - Oil Filter Wrench
- MB-991396 - Oil Filter Wrench

1. Remove the engine timing belt (See Engine Timing Belt Removal & Installation in Section 02 Engine).
2. Remove the upper balance shaft timing belt (See Upper Balance Shaft Timing Belt Removal & Installation in Section 02 Engine).
3. Raise and support the vehicle.
4. Loosen the oil drain plug and drain the oil.
5. Remove the oil pan retaining bolts.
   (Tighten: Oil pan bolts to 18 N·m)
6. Using special tool MD-998727 (1), remove the oil pan.

   NOTE: Insert the special tool between cylinder block and the oil pan. Do not use a screwdriver or chisel, otherwise the edge of oil pan may be distorted and oil leaks will occur.
7. Remove the oil strainer retaining bolts.
   (Tighten: Oil strainer bolts to 19 N·m)
8. Remove the oil strainer.
9. Remove the oil strainer gasket.

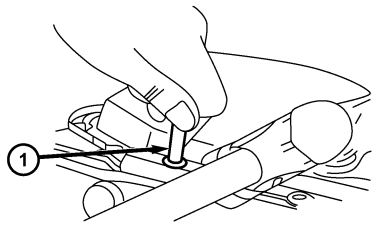

ltsm020134

10. Secure the lower balance shaft. Remove the plug from the cylinder block and then insert a holder (1) (8 mm diameter) into the hole.

    NOTE: If the holder can be inserted more than 60 mm, then the timing marks are aligned. If the holder could not be inserted more than 20-25 mm, the lower balance shaft pulley should be rotated one revolution and the timing marks should be then be aligned. Keep the holder installed until the installation of the timing belt is complete.

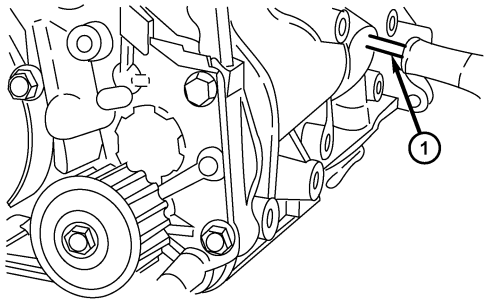

ltsm020186

Downloaded from www.Manualslib.com manuals search engine

11. Remove the lower balance shaft bolt (1).
    (Tighten: Lower balance shaft bolt to 55 N·m)
12. Remove the lower balance shaft pulley.

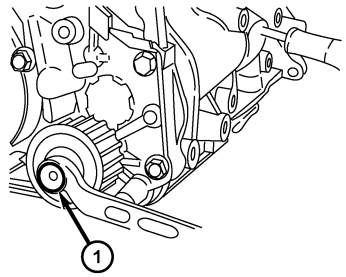

ltsm020174

13. Remove the crankshaft pulley bolt.
    (Tighten: Crankshaft pulley bolt to 120 N·m)
14. Using special tool MD-9988778 (1), remove the crankshaft pulley.

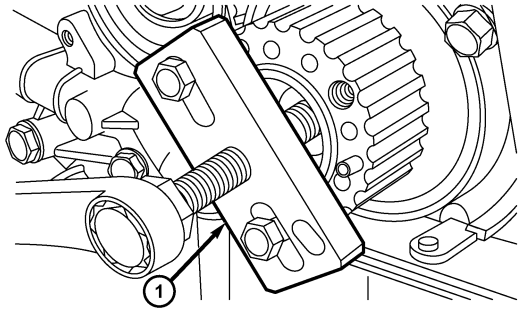

ltsm020052

15. Using special tool MD-9988785 (1), lock the upper balance shaft pulley in place.
16. Remove the upper balance shaft pulley bolt.
    (Tighten: Upper balance shaft pulley bolt to 45 N·m)

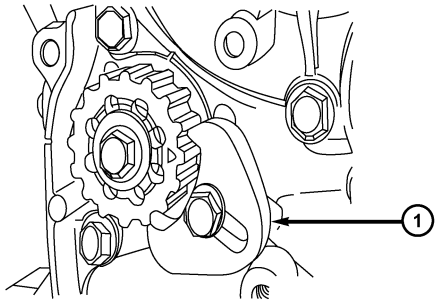

ltsm020054

17. Using special tool MD-9988778 (1), remove the upper balance shaft pulley.
18. Remove the front cover.
19. Remove the front cover gasket.
20. Remove the upper balance shaft.
21. Remove the upper balance shaft bearings (See Upper Balance Shaft Bearing Replacement in Section 02 Engine).
22. Installation is in the reverse order of removal.

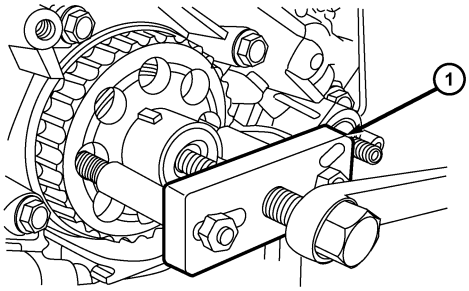

ltsm020172

Downloaded from www.Manualslib.com manuals search engine

Upper Balance Shaft Bearing Replacement

1. Using special tool MB-991603 (2) and MD-998372 (1), disassemble the upper balance shaft front and rear bearing from the cylinder block.

NOTE :
Special tool MB-991603 should be installed on the front of the cylinder block when disassembling the upper balance shaft rear bearing.

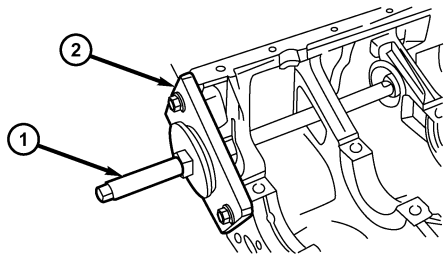

ltsm020138

2. Using special tool MB-991603 (2) and MD-998705 (1), install the rear bearing (3).

NOTE :
There is NO oil hole in the rear bearing.

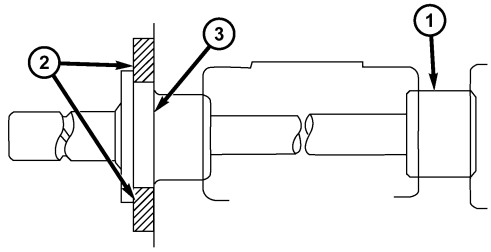

ltsm020141

3. Using special tool MD-998705 (1), install the front bearing.

NOTE :
Align the oil holes in the front bearing and the cylinder block.

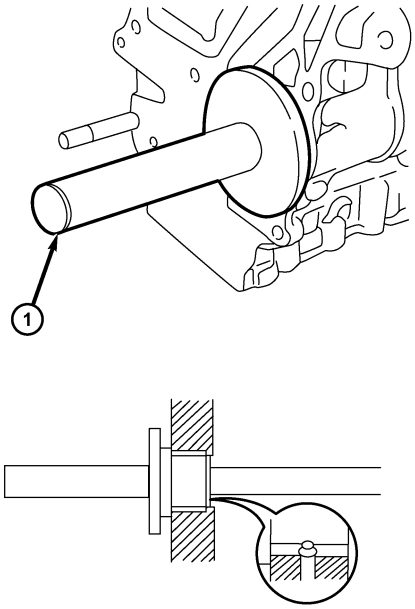

ltsm020187

Downloaded from www.Manualslib.com manuals search engine

Lower Balance Shaft

Removal & Installation

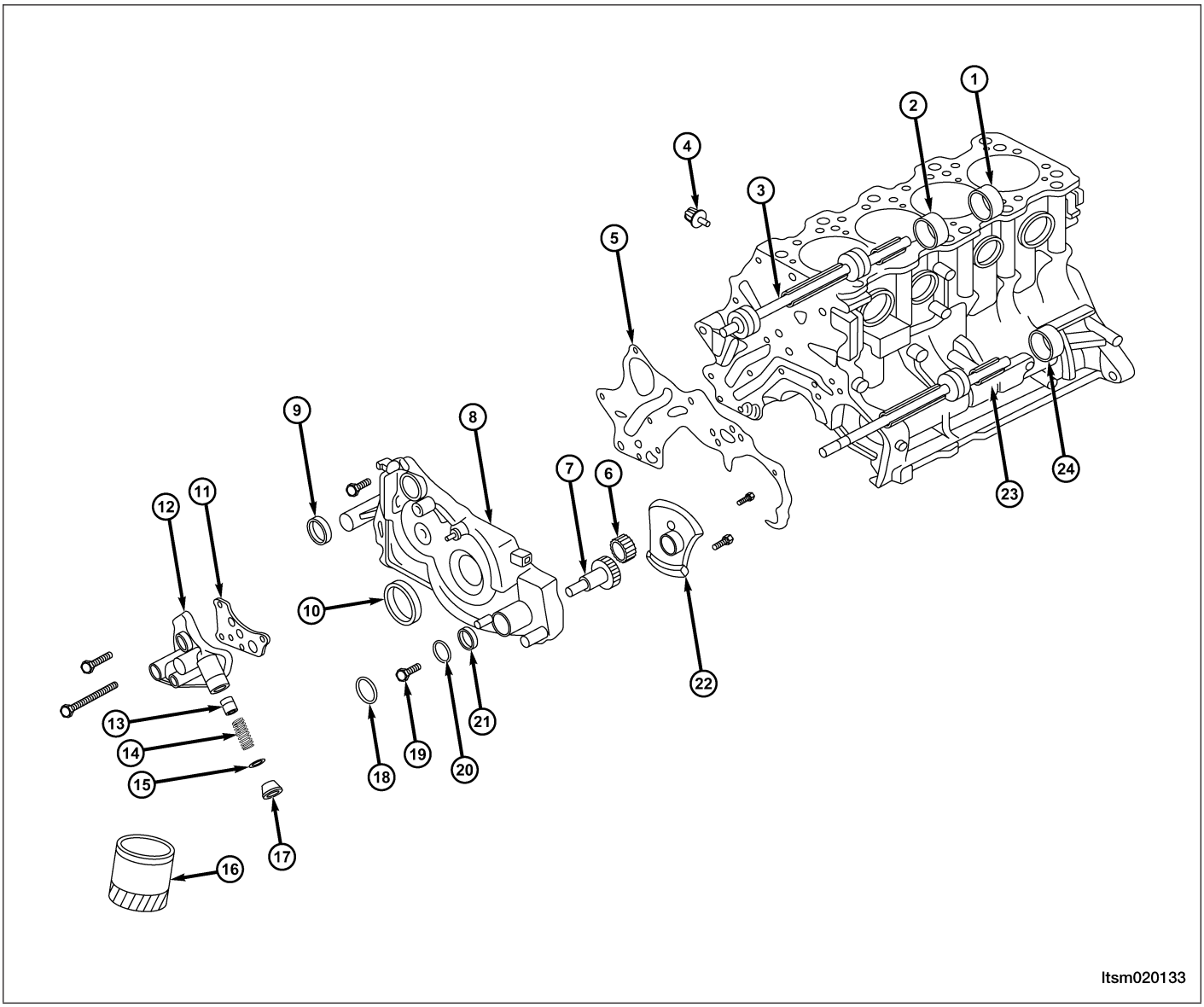

1 - Upper Balance Shaft Rear Bearing	13 - Pressure-Relief Valve
2 - Upper Balance Shaft Front Bearing	14 - Pressure Relief Spring
3 - Upper Balance Shaft	15 - Pressure-Relief Valve Seal
4 - Oil Pressure Switch	16 - Oil Filter
5 - Front Cover Gasket	17 - Pressure Relief Valve Plug
6 - Oil Pump Driven Gear	18 - Plug
7 - Oil Pump Drive Gear	19 - Front Cover Bolt
8 - Front Cover	20 - O-Ring
9 - Upper Balance Shaft Oil Seal	21 - Oil Pump Oil Seal
10 - Crankshaft Front Oil Seal	22 - Oil Pump Cover
11 - Oil Filter Adapter Gasket	23 - Lower Balance Shaft
12 - Oil Filter Adapter	24 - Lower Balance Shaft Rear Bearing

Downloaded from www.Manualslib.com manuals search engine

NOTE :
The following special tools are required to perform the repair procedure:
- MD-991603 - Balance Shaft Bearing Puller Limiter
- MD-998162 - Plug Spanner
- MD-998371 - Balance Shaft Bearing Puller
- MD-998372 - Balance Shaft Bearing Puller
- MD-998375 - Crankshaft Front Oil Seal Installer
- MD-998705 - Balance Shaft Bearing Installer
- MD-998727 - Oil Pan Remover
- MD-998783 - Plug Spanner Fixer
- MD-991828 - Oil Filter Wrench
- MD-991396 - Oil Filter Wrench

1. Raise and support the vehicle.
2. Loosen the oil drain plug and drain the oil.
3. Remove the engine timing belt (See Engine Timing Belt Removal & Installation in Section 02 Engine).
4. Remove the upper balance shaft timing belt (See Upper Balance Shaft Timing Belt Removal & Installation in Section 02 Engine).
5. Remove the oil pan retaining bolts.
   (Tighten: Oil pan bolts to 18 N·m)
6. Using special tool MD-998727 (1), remove the oil pan.

   NOTE: Insert the special tool between cylinder block and the oil pan. Do not use a screwdriver or chisel, otherwise the edge of oil pan may be distorted and oil leaks will occur.
7. Remove the oil strainer retaining bolts.
   (Tighten: Oil strainer bolts to 19 N·m)
8. Remove the oil strainer.
9. Remove the oil strainer gasket.

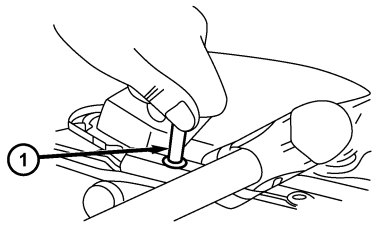

ltsm020134

10. Secure the lower balance shaft. Remove the plug from the cylinder block and then insert a holder (1) (8 mm diameter) into the hole.

    NOTE: If the holder can be inserted more than 60 mm, then the timing marks are aligned. If the holder could not be inserted more than 20-25 mm, the lower balance shaft pulley should be rotated one revolution and the timing marks should be then be aligned. Keep the holder installed until the installation of the timing belt is complete.

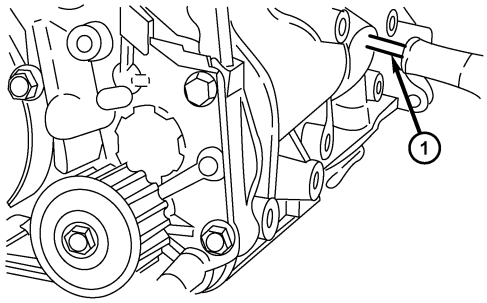

ltsm020186

Downloaded from www.Manualslib.com manuals search engine

11. Remove the lower balance shaft bolt (1).
    (Tighten: Lower balance shaft bolt to 55 N·m)
12. Remove the lower balance shaft pulley.

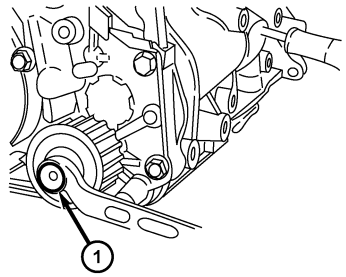

ltsm020174

13. Remove the crankshaft pulley bolt.
    (Tighten: Crankshaft pulley bolt to 120 N·m)
14. Using special tool MD-9988778 (1), remove the crankshaft pulley.

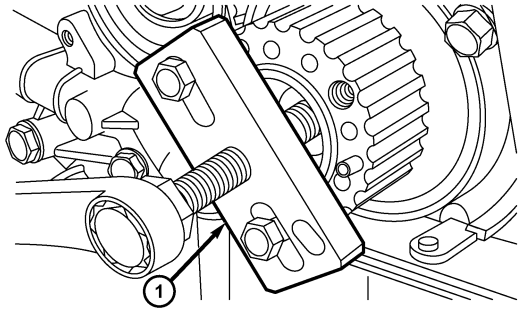

ltsm020052

15. Using special tool MD-9988785 (1), lock the upper balance shaft pulley in place.
16. Remove the upper balance shaft pulley bolt.
    (Tighten: Upper balance shaft pulley bolt to 45 N·m)

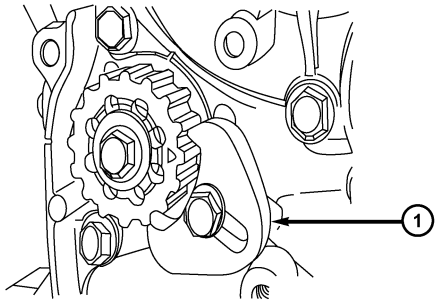

ltsm020054

17. Using special tool MD-9988778 (1), remove the upper balance shaft pulley.
18. Remove the front cover.
19. Remove the front cover gasket.
20. Remove the lower balance shaft.
21. Remove the lower balance shaft bearings (See Lower Balance Shaft Bearing Replacement in Section 02 Engine).
22. Installation is in the reverse order of removal.

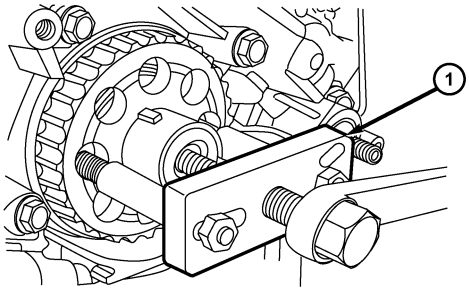

ltsm020172

Downloaded from www.Manualslib.com manuals search engine

Lower Balance Shaft Bearing Replacement

1. Using special tool MD-998371 (1), remove the lower balance shaft front bearing from the cylinder block.

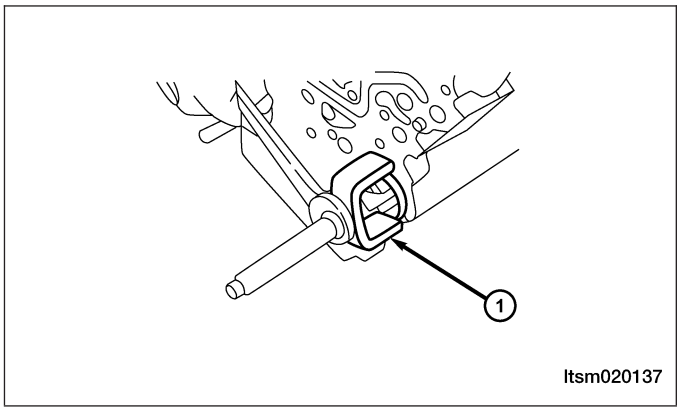

2. Using special tool MD-998705 (1) MD-991603 (2), remove the lower balance shaft rear bearing from the cylinder block.

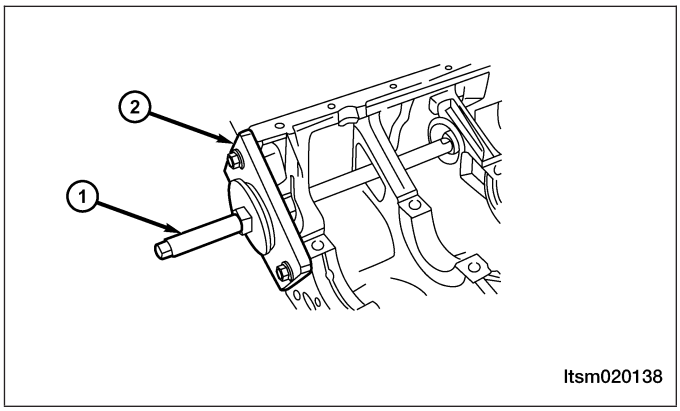

3. Using special tool MD-998705 (2), install the rear bearing.

NOTE :
Align the oil holes (1) in the rear bearing and the cylinder block.

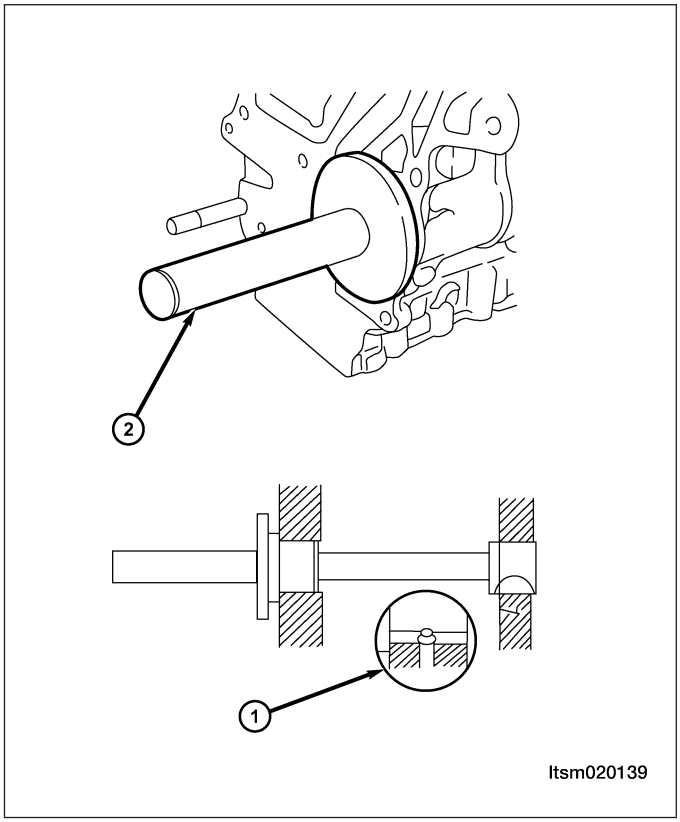

Downloaded from www.Manualslib.com manuals search engine

4. Using special tool MD-998705 (1), install the front bearing.

NOTE :
Align the oil holes in the front bearing and the cylinder block.

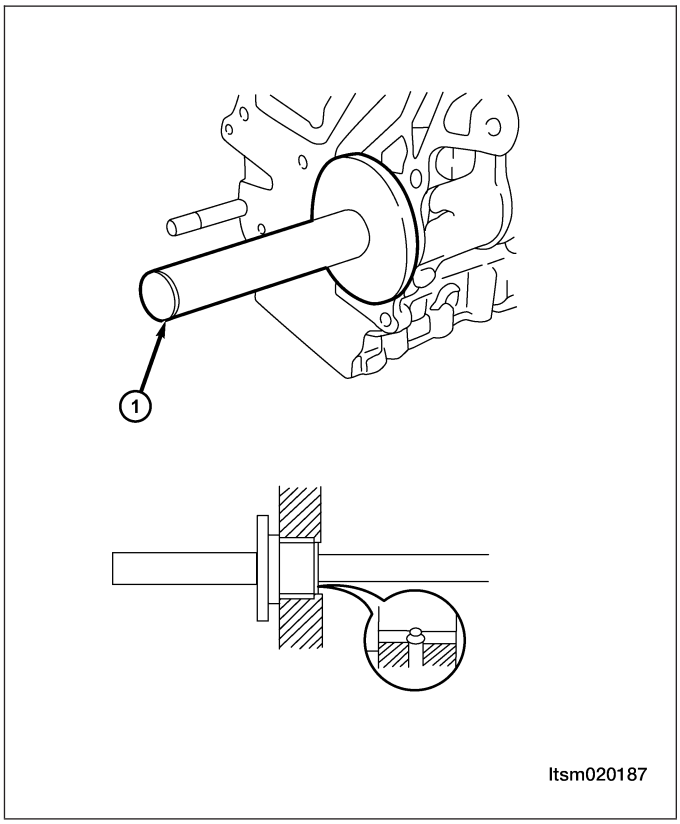

Oil Filter

Removal & Installation

NOTE :
The following special tools are required to perform the repair procedure:
- MB-991828 - Oil Filter Wrench
- MB-991396 - Oil Filter Wrench

WARNING!

Prolonged and repeated contact with engine oil will harm your skin. If engine oil is spilled on your skin, wash it off immediately with water. In addition, used engine oil contains potentially harmful contaminants which may cause skin cancer. Always use adequate skin protection when performing vehicle service.

CAUTION:
When servicing the oil filter, install the special tool against the base of the filter to avoid deforming the filter.

1. Start the engine and allow it to warm up to normal operating temperature.
2. Stop the engine and remove the engine oil filler cap.
3. Raise and support the vehicle.
4. Remove the oil pan drain plug and drain the oil out of the engine.

WARNING!

The engine oil is hot and can burn your skin.

5. Remove the under cover.

Downloaded from www.Manualslib.com manuals search engine

6. Using special tool MB-991828 or MB-991396 oil filter wrench, remove the oil filter (1).

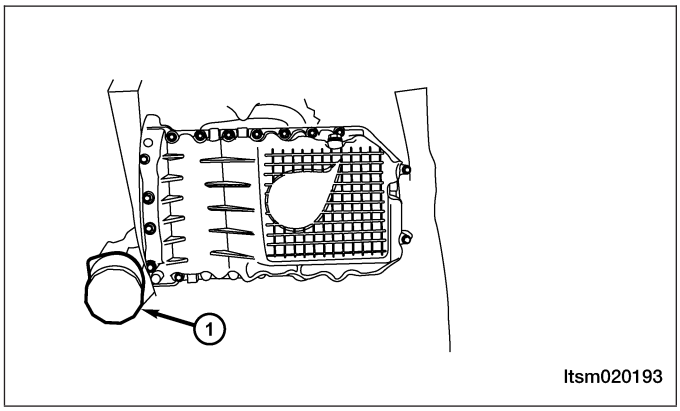

CAUTION:
When removing the oil filter, ensure that the oil filter gasket is not stuck to the engine. The oil filter gasket must be removed from the engine before installing the new oil filter.

7. Clean the oil filter bracket side mounting surface.
8. Apply a small amount of engine oil to the O-ring of the new oil filter.
9. Once the O-ring of the oil filter is touching the flange, use special tool MB-991828 or MB-991396 and tighten the oil filter to 16 ± 4 N·m.
10. Install a new drain plug gasket and then install the oil pan drain plug. (Tighten: Oil pan drain plug to 45 N·m)
11. Refill the engine with the specified quantity and grade of engine oil.
12. Install the oil filler cap.
13. Check the engine oil level.

Installation Notes:

- Clean all surfaces, and verify the oil filter does not leak.

Oil Pan

Removal & Installation

NOTE :
The following special tools are required to perform the repair procedure:
- MD-998727 - Oil Pan Remover

1. Remove the oil dipstick.
2. Raise and support the vehicle.
3. Remove the oil pan drain plug (2) and drain the engine oil.
   (Tighten: Oil pan drain plug to 45 N·m)
4. Remove the oil pan (3) retaining bolts (1).
   (Tighten: Oil pan bolts to 18 N·m)

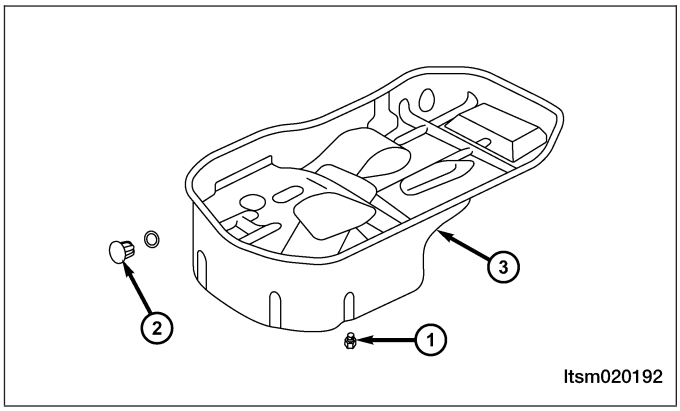

Downloaded from www.Manualslib.com manuals search engine

5. Using special tool MD-998727 (1), remove the oil pan.

   NOTE: Insert the special tool between cylinder block and the oil pan. Do not use a screwdriver or chisel, otherwise the edge of oil pan may be distorted and oil leaks will occur.

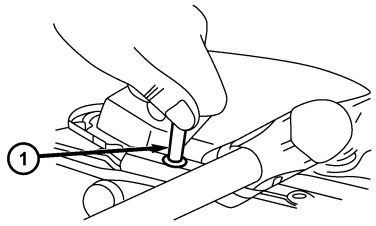

ltsm020134

6. Installation is in the reverse order of removal.

Installation Notes:

- Oil pan sealing surfaces must be free of grease or oil.
- Install the four oil pan corner bolts in the sequence shown (1-2-3-4).
- Install the remaining oil pan bolts.
- Torque all the oil pan bolts to the proper specification.

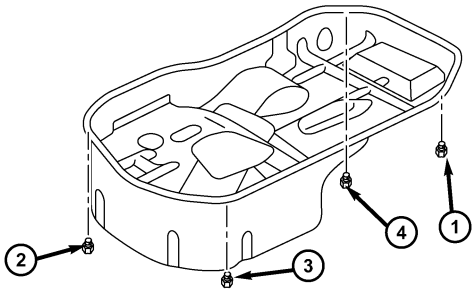

ltsm020241

Downloaded from www.Manualslib.com manuals search engine

Oil Pump

Removal & Installation

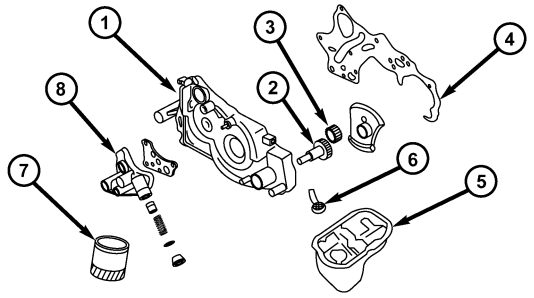

ltsm020045

1 - Engine Front Cover	5 - Oil Pan
2 - Oil Pump Driving Gear	6 - Oil Strainer
3 - Oil Pump Driven Gear	7 - Oil Filter
4 - Oil Pump Rear Cover	8 - Oil Filter Adapter

1. Remove the engine timing belt (See Engine Timing Belt Removal & Installation in Section 02 Engine).
2. Remove the upper balance shaft timing belt (See Upper Balance Shaft Timing Belt Removal & Installation in Section 02 Engine).
3. Remove the oil filter.
4. Remove the oil filter adapter.
   (Tighten: oil filter adapter bolts to 11 N·m)
5. Remove the engine front cover.
6. Remove the oil pump drive gear and the driven gear.
7. Remove the oil pump rear cover.
8. Installation is in the reverse order of removal.

Installation Notes:

- Before installing the new oil pump, prime the oil pump by filling the oil pump with engine oil and rotate the oil pump.
- Align the oil pump timing marks (1).
- Check oil pump side clearance.

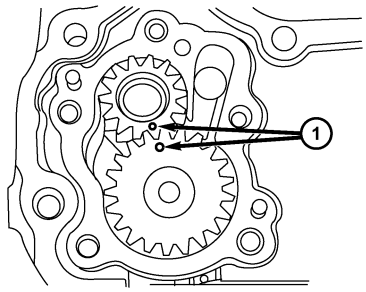

ltsm020145

Downloaded from www.Manualslib.com manuals search engine

Oil Pump Clearance Specifications

- Driving Gear: 0.08-0.14 mm
- Driven Gear: 0.06-0.12 mm

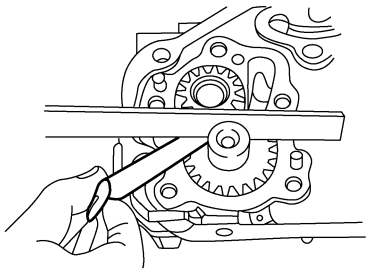

ltsm020149

Oil Strainer

Removal & Installation

1. Raise and support the vehicle.
2. Remove the oil pan (See Oil Pan Removal & Installation in Section 02 Engine).
3. Remove the oil strainer retaining bolts.
   (Tighten: Oil strainer bolts to 18 N·m)
4. Carefully remove the oil strainer.
5. Installation is in the reverse order of removal.

Installation Notes:

- Install new O-rings on the oil strainer pipe.

Downloaded from www.Manualslib.com manuals search engine

Engine Block

Specifications

Torque Specifications

DESCRIPTION	TORQUE (N·m)
Connecting Rod Cap Nuts	1st Step: Tighten the nuts to 20 N·m 2nd Step: Tighten the nuts an additional 90°-100°
Main Bearing Cap Bolts	1st Step: Tighten the bolts to 25 N·m 2nd Step: Tighten the bolts an additional 90°-100°

Clearance Specifications

DESCRIPTION	SPECIFICATION (mm)
Surface Distortion Limit	0.15
Cylinder Diameter Standard	86.50 - 86.53
Out-Of-Round	< 0.008
Taper	< 0.01

Downloaded from www.Manualslib.com manuals search engine

Disassembly

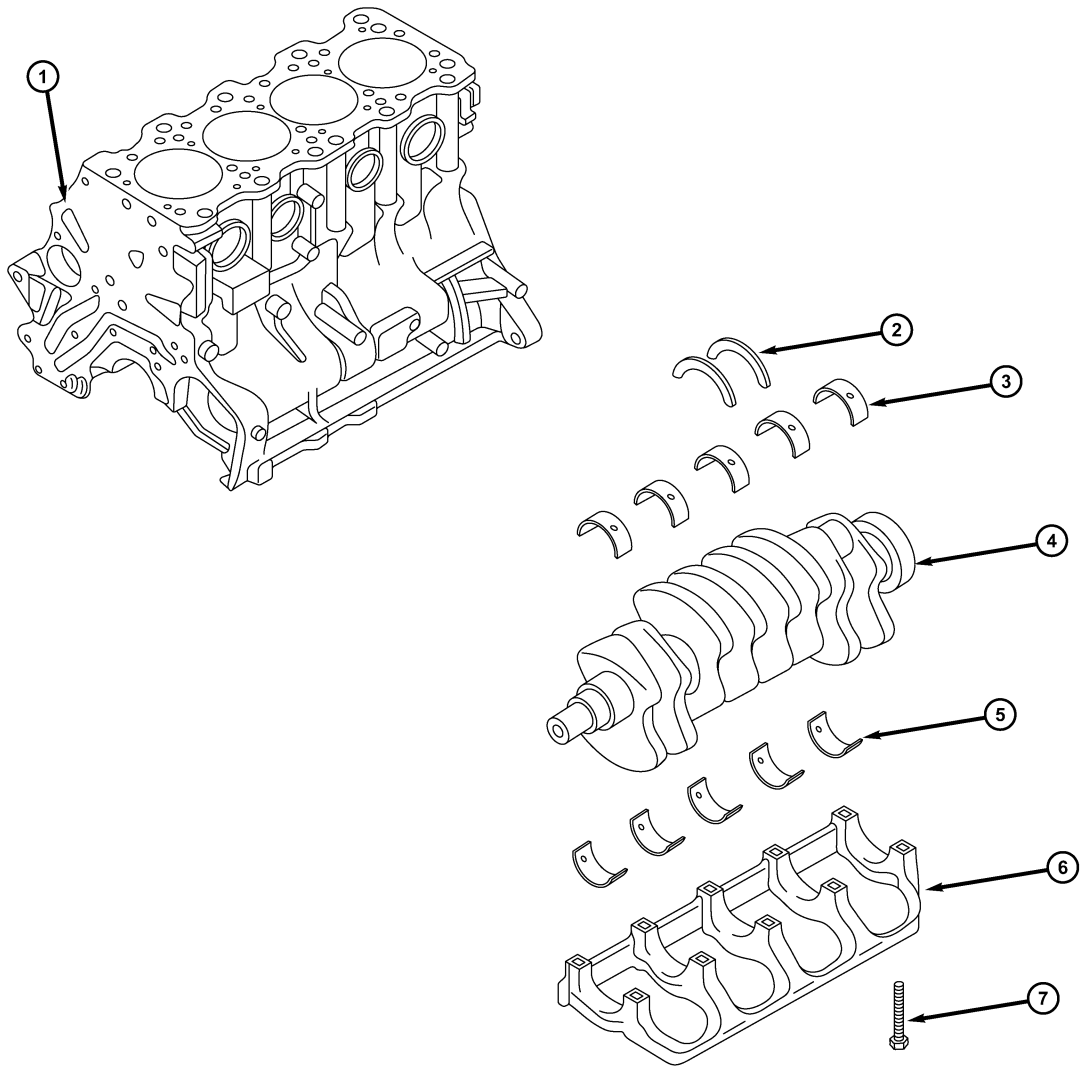

1 - Cylinder Block	5 - Lower Crankshaft Bearing
2 - Crankshaft Thrust Bearing	6 - Bearing Cap
3 - Upper Crankshaft Bearing	7 - Bearing Cap Bolt
4 - Crankshaft	

1. Remove the oil pan.
2. Remove the oil strainer.
3. For each connecting rod/piston assembly to be removed, rotate the crankshaft to the bottom dead center position for each cylinder.

NOTE :
Before removing the connecting rod/piston assembly, check the connecting rod side clearance.

Downloaded from www.Manualslib.com manuals search engine

4. Remove the connecting rod retaining bolts.

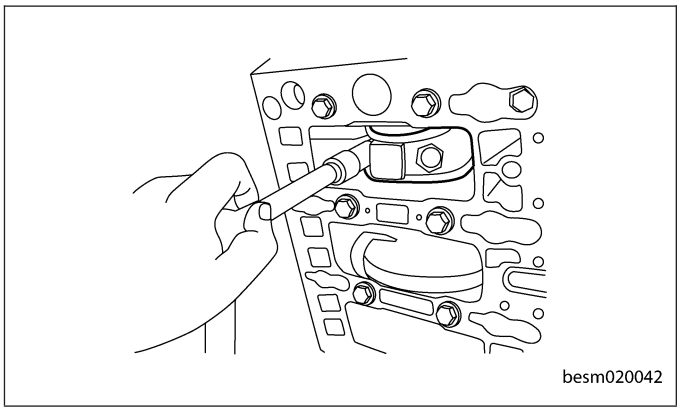
besm020042

5. Remove the connecting rod bearing cap.

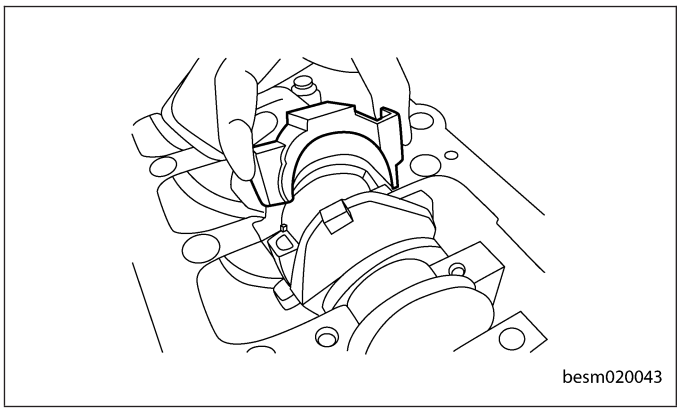
besm020043

6. Using a hammer handle or similar tool, push the connecting rod/piston assembly (1) out through the top of the cylinder block.

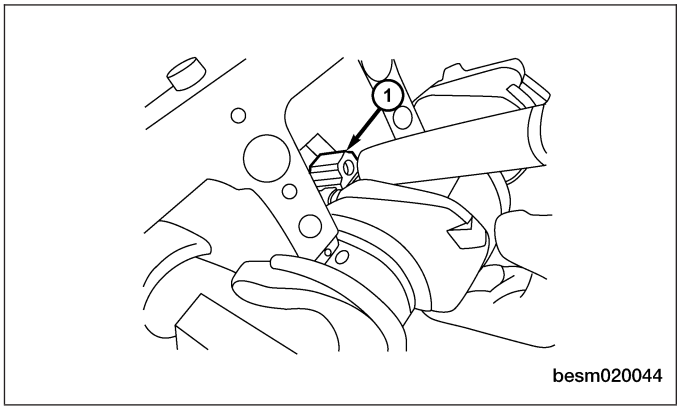

besm020044

7. Remove the connecting rod bearings (See Connecting Rod Removal & Installation in Section 02 Engine).
   CAUTION: When removing the connecting rod side bearings, note the installation position. Keep them in the correct order.

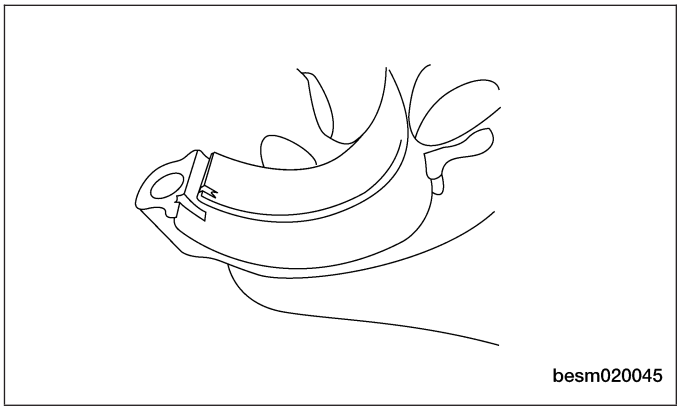
besm020045

8. Installation is in the reverse order of removal.

Downloaded from www.Manualslib.com manuals search engine

Inspection

NOTE :
All measurements should be taken with the engine block at room temperature, 21°C.

Engine Block

- Clean cylinder block thoroughly and check all core hole plugs for evidence of leaking.
- Examine block and cylinder bores for cracks or fractures.
- Check block deck surfaces for flatness. Deck surface must be within service limit of 0.050 mm.

Cylinder Bore

- The cylinder walls should be checked for out-of-round and taper with cylinder indicator or equivalent. If the cylinder walls are badly scuffed or scored, the cylinder block should be replaced, and new pistons and rings fitted.
- Measure the cylinder bore at three levels in directions A and B. Top measurement should be 12 mm down and bottom measurement should be 12 mm up from bottom of bore.

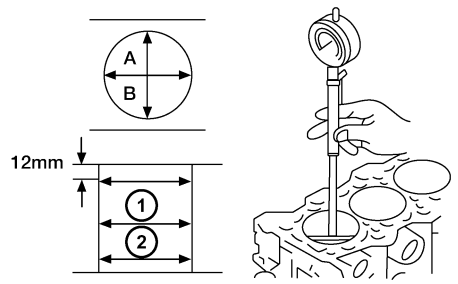

ltsm020126

CYLINDER BORE	
Cylinder Size	86.50 - 86.53 mm
Cylinder Cylindrically	≤ 0.01 mm

Assembly

NOTE :
Cleanliness is extremely important during the engine assembly procedure. Any foreign material, including any material created while cleaning gasket surfaces, that enters the oil passages, coolant passages or the oil pan can cause engine failure.

NOTE :
Assemble all components in their original position.

1. Install the pistons to the connecting rods.
2. Using a piston ring expander, install the piston rings.
3. Assemble all components in the reverse order of disassembly.

Downloaded from www.Manualslib.com manuals search engine

Pistons

Specifications

Clearance Specifications - Pistons

DESCRIPTION	SPECIFICATION (mm)
Surface Distortion Limit	0.15
Out-Of-Round	< 0.008
Taper	< 0.01

Clearance Specifications - Piston Ring Groove

DESCRIPTION	SPECIFICATION	LIMIT
First Ring	0.02 - 0.06 mm	0.1 mm
Second Ring	0.02 - 0.06 mm	0.1 mm

Clearance Specifications - Piston Ring End Gap

DESCRIPTION	SPECIFICATION	LIMIT
First Ring	0.25 - 0.35 mm	0.8 mm
Second Ring	0.40 - 0.55 mm	0.8 mm
Oil Control Ring	0.10 - 0.40 mm	1.0 mm

Clearance Specifications - Piston to Piston Pin

DESCRIPTION	SPECIFICATION (mm)
Piston To Piston Pin	0.002 - 0.013

Downloaded from www.Manualslib.com manuals search engine

Disassembly

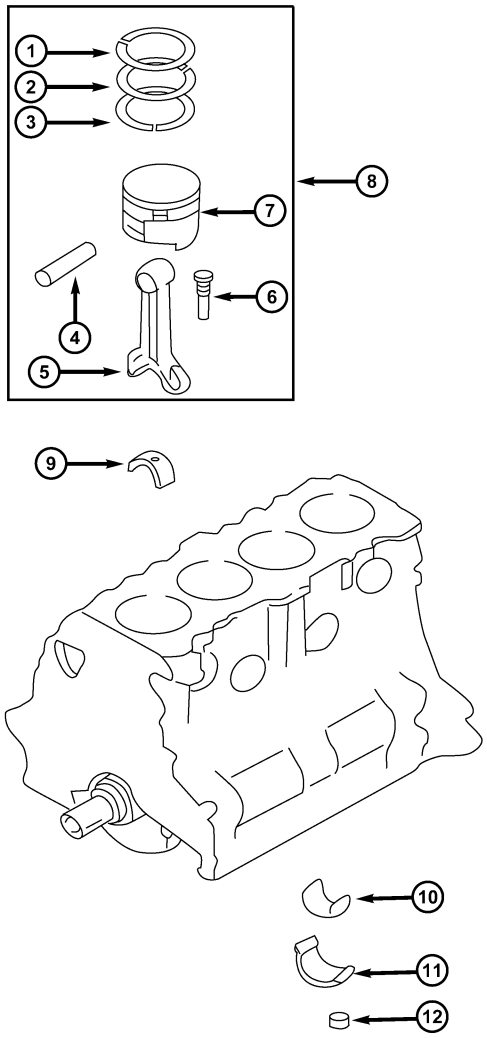

ltsm020107

1 - No. 1 Compression Ring	7 - Piston
2 - No. 2 Compression Ring	8 - Piston and Connecting Rod Assembly
3 - Oil Control Ring	9 - Upper Connecting Rod Bearing
4 - Piston Pin	10 - Lower Connecting Rod Bearing
5 - Connecting Rod	11 - Connecting Rod Cap
6 - Connecting Rod Bolt	12 - Connecting Rod Nut

Piston Ring Removal

- Using a suitable ring expander, remove upper and intermediate piston rings.
- Remove the upper oil ring side rail, lower oil ring side rail and then oil ring expander from piston.
- Clean ring grooves of any carbon deposits.

Downloaded from www.Manualslib.com manuals search engine

CAUTION:
Before removing the piston rings (1), check the piston ring side clearance. Be careful to mark the location of the piston rings if they are to be reused.

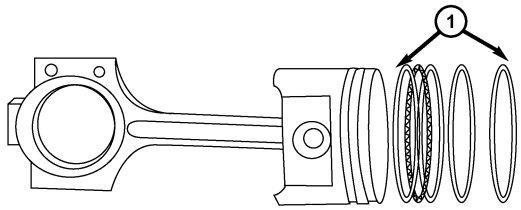

besm020046

Piston Pin Removal

- Using special tool MD-998780 (1) & (2), remove the piston pin for the pistons.
- Insert the tool push rod into the piston from the notched side.
- Attach the tool guide into the piston and to the push rod.

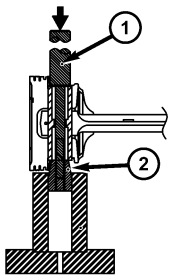

ltsm020180

Connecting Rod & Piston Disassembly

- Connecting Rod & Piston Disassembly.
  - Remove the piston from the connecting rod.

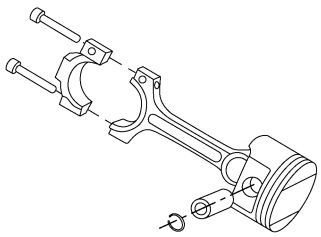
besm020041

Downloaded from www.Manualslib.com manuals search engine

Inspection

Cylinder Bore

- Check the inner diameter of each cylinder bore (See Cylinder Bore Inspection in Section 02 Engine).

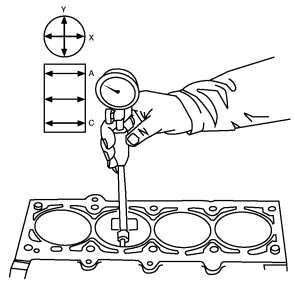

besm020063

CYLINDER BORE	
All Cylinders	86.50 - 86.53 mm

Ring Groove Side Clearance

- Check piston ring to groove side clearance.
  - Clean the ring slot using a suitable tool.
  - Measure piston ring to groove side clearance.

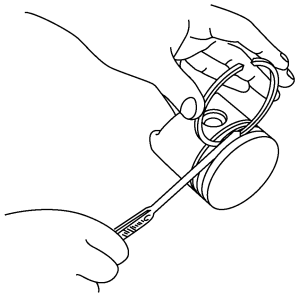

ltsm020121

RING GROOVE SIDE CLEARANCE		
DESCRIPTION	SPECIFICATION	LIMIT
First Ring	0.02 - 0.06 mm	0.1 mm
Second Ring	0.02 - 0.06 mm	0.1 mm

Downloaded from www.Manualslib.com manuals search engine

Ring End Gap

- Wipe the cylinder bore clean. Insert ring and push down with piston to ensure it is square in the bore. The ring gap measurement must be made with the ring positioned at least 13 mm from bottom of cylinder bore and below the bottom of the oil ring travel where the cylinder bore has minimal wear. Check gap with feeler gauge.

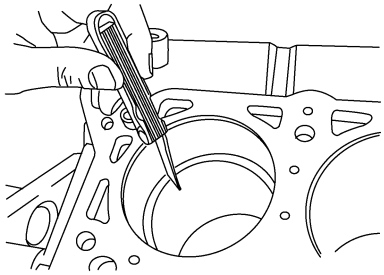

besm020052

RING END GAP		
DESCRIPTION	**SPECIFICATION**	**LIMIT**
First Ring	0.25 - 0.35 mm	0.8 mm
Second Ring	0.40 - 0.55 mm	0.8 mm
Oil Control Ring	0.10 - 0.40 mm	1.0 mm

Piston Pin Clearance

- Check the diameter of the piston pin bore.
- Check the outer diameter of the piston pin.

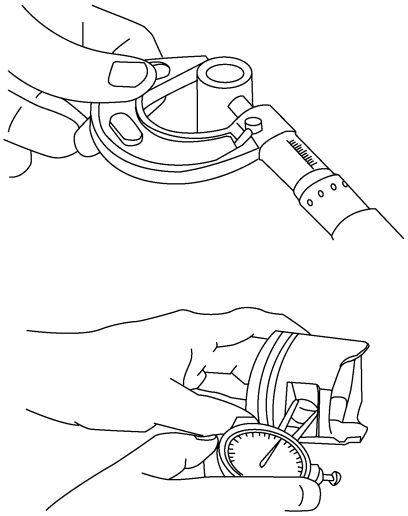

besm020053

Downloaded from www.Manualslib.com manuals search engine

- Check the inner diameter of connecting rod (small end).

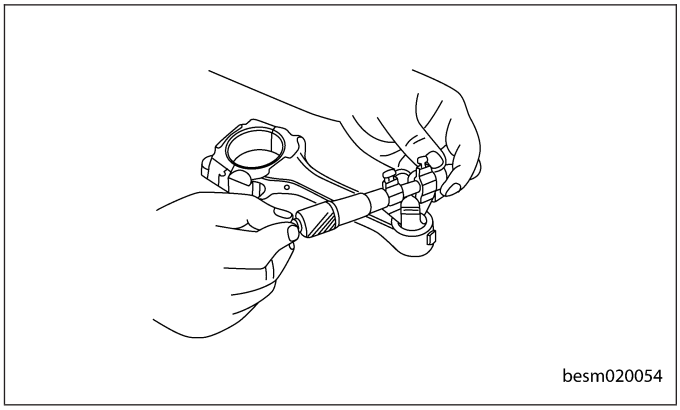

PISTON PIN CLEARANCE	
Piston and Piston Pin	0.002 - 0.013 mm

Assembly

Piston Pin Installation

- Measure the following dimensions of each piston (1), piston pin (2) and connecting rod (3).
  - Length of piston pin in hole (A).
  - Width of pin sockets (B).
  - Length of piston pin (C).
  - Width of small end of connecting rod (D).
- Put measured sizes above into following formula to calculate L.
  - L=[(A-C)-(B-D)] / 2

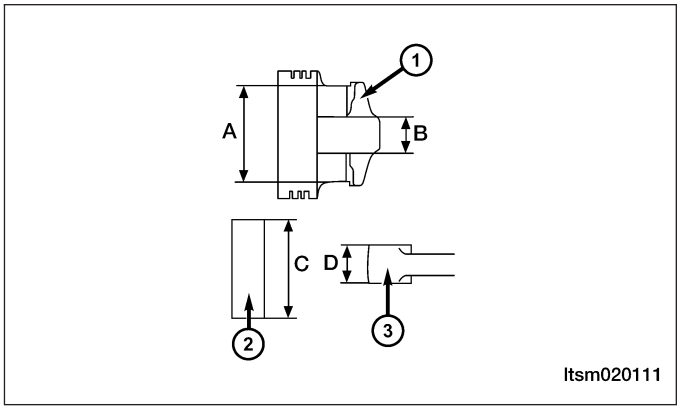

- After inserting the push rod of the special tool into piston pin, install pipe A in the top of the push rod.
- Install forward marks of piston and connecting rod in the same direction.
- Lubricate the external diameter of piston pin with engine oil.
- Through pipe A, insert the push rod, piston pin and pipe component into piston pin hole from the side with the forward mark.
- Screw on guide block B into guide pipe A to gain clearance between guide block A (2) and guide block B (1) equal to the value of Value L (L=[(A-C)-(B-D)] / 2) plus 3 mm.

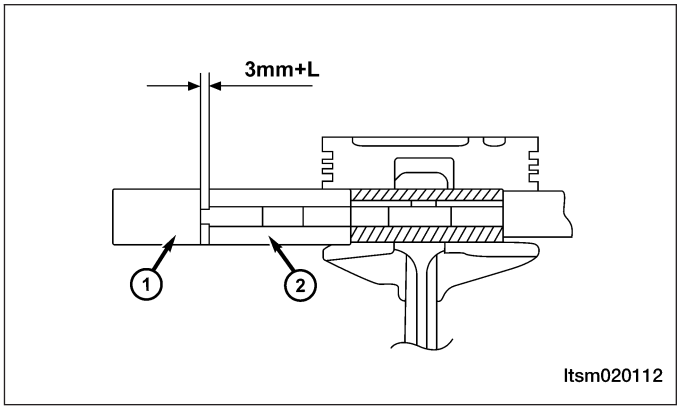

- Keep the forward mark of piston upward. Install piston and connecting rod in tool base of piston pin installer.

Downloaded from www.Manualslib.com manuals search engine

- Using a press, press the piston pin (1) in under pressure. When the pressure is less than standard value, replace piston pin and piston component and/or replace connecting rod.standard value: 7,350-17,200 Newtons

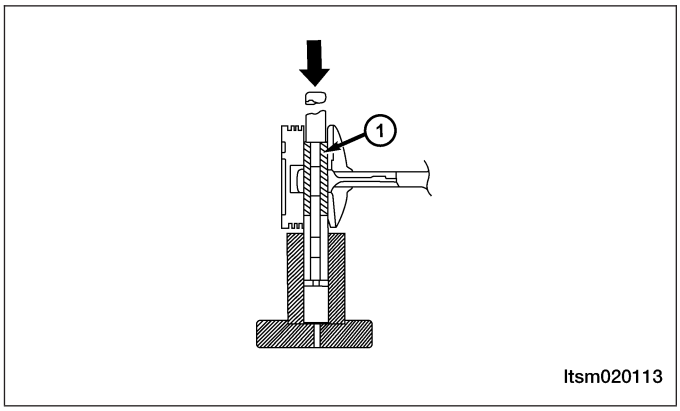

- Check to make sure the piston can rotate freely.

Piston Ring Installation

NOTE :
The compression rings have an identification mark (1) on the top of the ring.

Piston Ring Identification Marks:

- No. 1 Ring - 1R
- No. 2 Ring - 2R

When installing piston ring, keep the mark upwards and towards the top of piston.

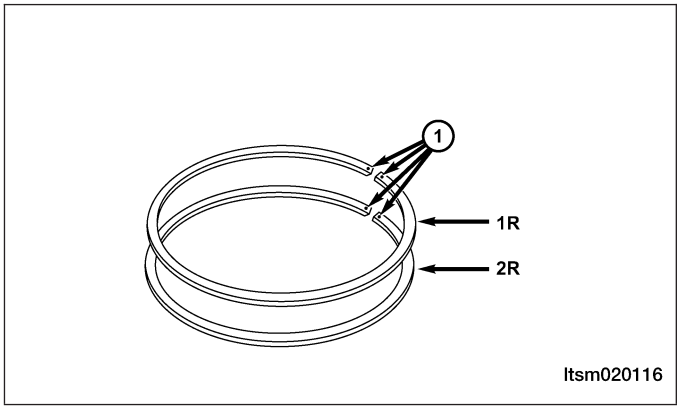

- Size markings of pistons shown as the following:

SIZE	IDENTIFICATION
Standard	None
Increase 0.50 mm	50
Increase 1.00 mm	100

CAUTION:
Do not use a piston ring expander to install the oil control rings.

Oil Control Ring Installation

- Install the main ring of oil control ring into oil ring groove.

NOTE :
There is no difference between the upper and lower oil control rings.

Downloaded from www.Manualslib.com manuals search engine

- Install the bottom oil control ring (1). When installing the ring, force one side of the piston ring into the piston oil ring groove. Then force the ring into oil ring groove with the thumb as shown.
- Install the top oil control ring. When installing the ring, force one side of the piston ring into the piston oil ring groove. Then force the ring into oil ring groove with the thumb as shown.
- Ensure the ring can turn from the left to the right freely after installation.

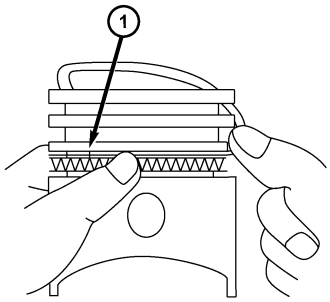

ltsm020114

Bottom Compression Ring Installation (2nd Ring)

- Using a piston ring expander, install the bottom compression ring.
- Ensure the ring can turn from the left to the right freely after installation.

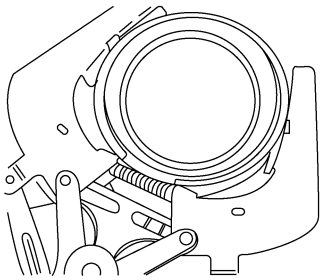
besm020047

Top Compression Ring Installation (1st Ring)

- Using a piston ring expander, install the top compression ring.
- Ensure the ring can turn from the left to the right freely after installation.

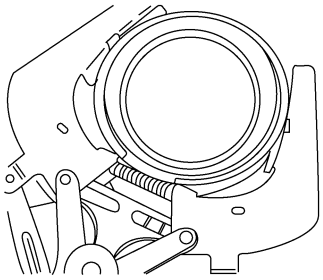
besm020047

Downloaded from www.Manualslib.com manuals search engine

Connecting Rods

Specifications

Torque Specifications

DESCRIPTION	TORQUE (N·m)
Connecting Rod Nuts	1st Step: Tighten the nuts to 20 N·m 2nd Step: Tighten the nuts an additional 90°-100°

Clearance Specifications

DESCRIPTION	SPECIFICATION (mm)
Connecting Rod Radial Clearance	0.016 - 0.051
Connecting Rod Axial Clearance	0.002 - 0.013

Disassembly

1. Remove the connecting rod cap nuts.

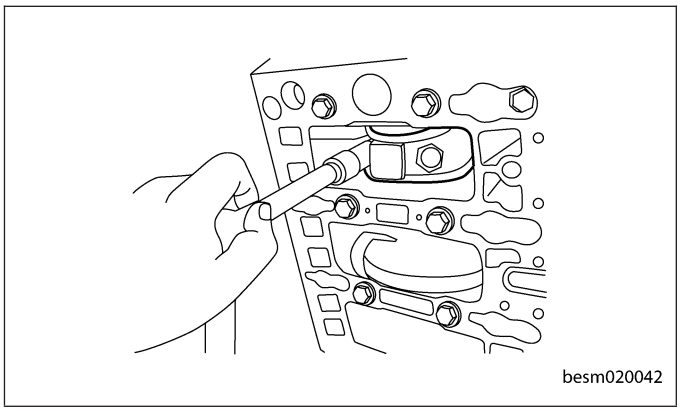
besm020042

2. Remove the connecting rod bearing cap.

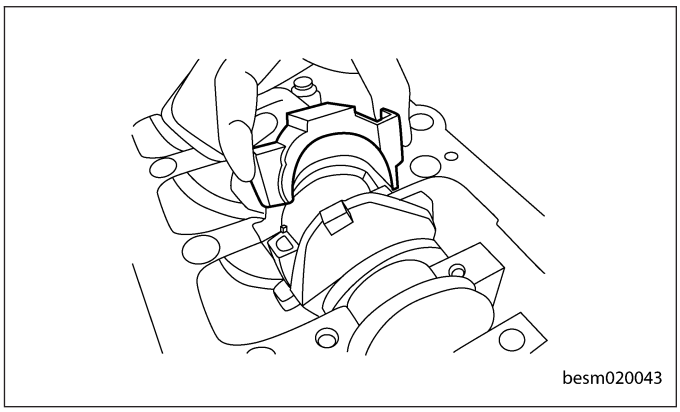
besm020043

Downloaded from www.Manualslib.com manuals search engine

3. Using a hammer handle or similar tool, push the piston and connecting rod assembly (1) out through the cylinder head side of the engine block.

   NOTE: Before removing the piston and connecting rod assembly, check the connecting rod side clearance.

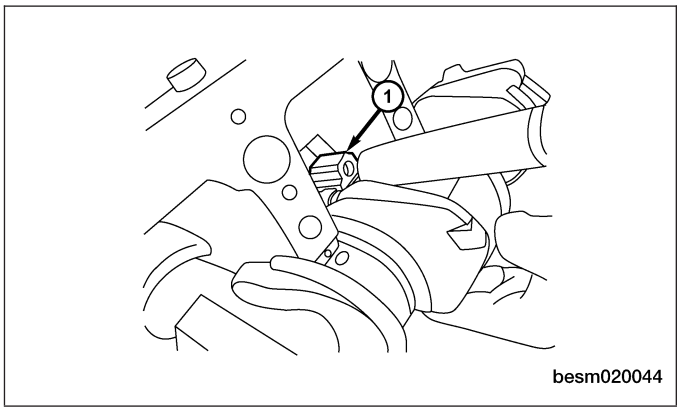

4. Remove the connecting rod bearings.
   CAUTION: When removing the connecting rod side bearings, note the installation position. Keep them in the correct order.

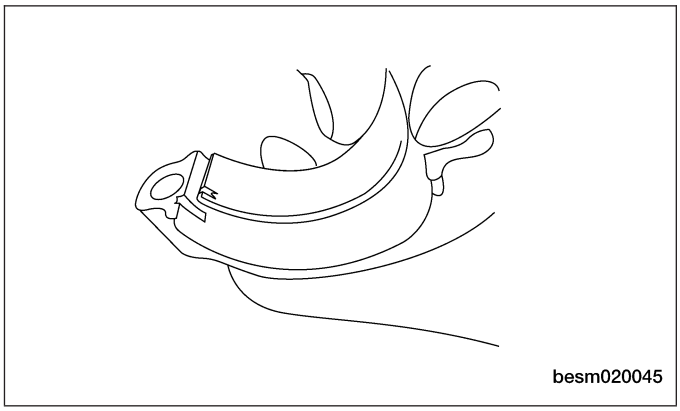

Inspection

Bearing Radial Clearance

- Check the radial clearance of connecting rod bearing.

CONNECTING ROD RADIAL CLEARANCE	
Radial Clearance	0.016 - 0.051 mm

Bearing Oil Clearance (Plastigauge)

- Check the oil clearance of the connecting rods and crankshaft.
  - Clean all engine oil off of the connecting rod bearing and the crankshaft journal.
  - Cut the plastigauge into lengths as wide as the crankshaft journal.
  - Lay the plastigauge across the crankshaft journal.
  - Carefully install the connecting rod cap.
  - Torque the connecting rod cap nuts to 20 N·m
  - Carefully disassemble the connecting rod cap.
  - Use the measuring rule imprinted on the plastigauge package to measure the width of the widest part of the plastigauge.

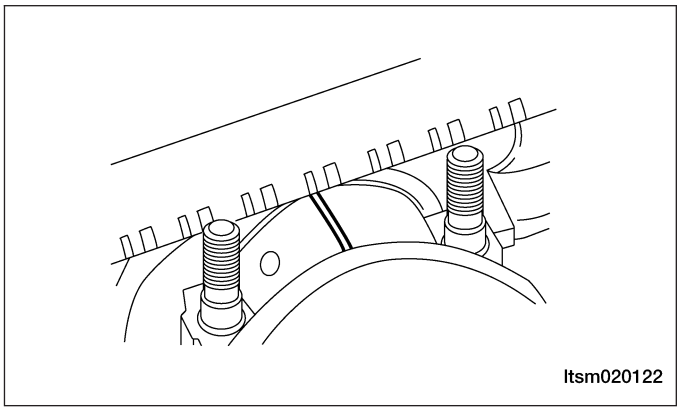

Downloaded from www.Manualslib.com manuals search engine

CONNECTING ROD BEARING OIL CLEARANCE	
Standard Clearance	0.02 - 0.05 mm
Maximum Clearance	0.1 mm

Assembly

NOTE :

- The connecting rod bolts should NOT be reused.
- Before installing the NEW rod bolts, apply clean engine oil to the threads and under the bolt heads.

Piston and Connecting Rod

- Oil the piston rings and the side of the piston.
- Position the piston rings in the proper alignment with the piston pin (2):
  - Top Ring (1)
  - Bottom Ring (3)
  - Oil Control Ring (4)
- Install protective coverings over the connecting rod bolts.
- Rotate the crankshaft journal to the lowest position.
- Use a suitable piston ring compressor to insert the piston and connecting rod assembly into cylinder.
- Make sure the forward mark on the top of the piston is facing the front of the engine (5).

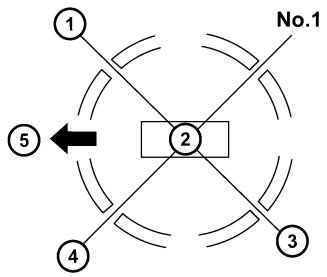

ltsm020117

- Using a suitable tool, tap the piston and connecting rod assembly into cylinder.

NOTE :
The piston direction mark (2) should point toward the timing belt side (1).

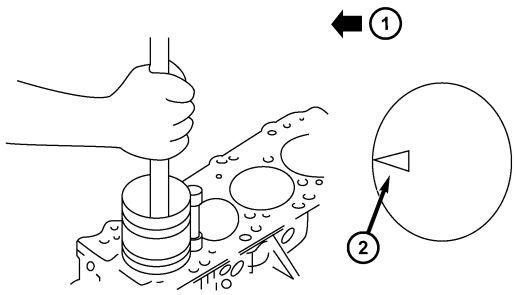

ltsm020118

- Check the axial clearance of the connecting rods.

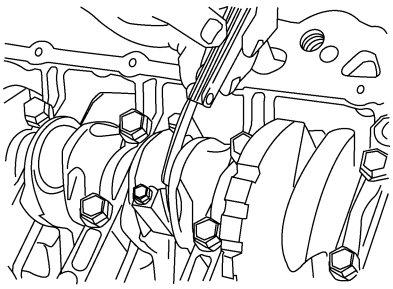
besm020064

Downloaded from www.Manualslib.com manuals search engine

CONNECTING ROD AXIAL CLEARANCE		
DESCRIPTION	SPECIFICATION	LIMIT
Connecting Rods	0.10 - 0.25 mm	0.4 mm

Connecting Rod Bearings

- Perform the following steps when replacing the connecting rod bearings:
  - Measure and record the External Diameter of the connecting rod journals.
  - Use the connecting rod bearing identification table to locate the desired bearing.

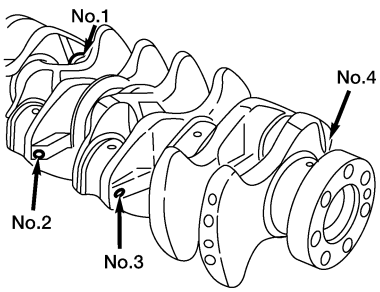

ltsm020119

- The bearing will have an identification mark (1) imprinted in the position as shown.

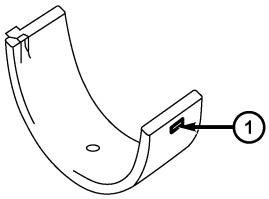

ltsm020181

IDENTIFYING CONNECTING ROD BEARINGS					
Internal Diameter of Connecting Rods (without bearing): 48.000 - 48.015 mm					
Crank Journal			Connecting Rod Bearing		
Group	Identification Color	External Diameter (mm)	Identification Number	Identification Color	Thickness (mm)
1	Yellow	44.995 - 45.000	1	Yellow	1.487 - 1.491
2	None	44.985 - 44.995	2	None	1.491 - 1.495
3	White	44.980 - 44.985	3	Blue	1.495 - 1.499

NOTE :
As an example, if the measurement of the external diameter of the connecting rod journal is 44.996 mm, it will be identified as Group 1 in the table. If the crankshaft has been replaced, check the identification color applied to the new crankshaft journal. If the journal is yellow, the crankshaft bearing will be from Group 1, and the connecting rod bearing will be identified as 1.

Downloaded from www.Manualslib.com manuals search engine

Connecting Rod Cap Nuts

- Apply engine oil to the connecting rod bolts.
- Install each connecting rod nut finger tight, then alternately tighten each nut to assemble the cap properly.
- Tighten the connecting rod nuts using the two step torque-turn method:
  - 1st Step: Tighten nuts to 20 N·m
  - 2nd Step: Tighten the connecting rod nuts an additional 90°- 100°

CAUTION:
If the nuts are over tightened (exceed angle of 100°), loosen the nuts and restart the torque sequence from Step 1.

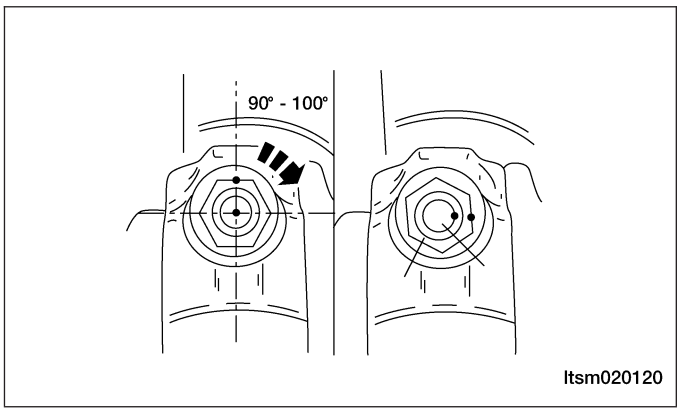

Crankshaft

Specifications

Torque Specifications

DESCRIPTION	TORQUE (N·m)
Main Bearing Cap Bolts	1st Step: Tighten the bolts to 25 N·m 2nd Step: Tighten the bolts an additional 180°

Clearance Specifications

DESCRIPTION	SPECIFICATION (mm)
Diameter of Crankshaft Main Journals	53.981 - 54
Diameter of Crankshaft Rod Journals	47.884 - 47.9
Out-of-Round Maximum of Crankshaft Main Journals	0.008
Axial Clearance of Crankshaft	0.07 - 0.265
Radial Clearance of Crankshaft	0.0035 - 0.034
Coaxality Crankshaft Main Journal	0.05
Thrust Washer Thickness	2.4 - 2.405

Downloaded from www.Manualslib.com manuals search engine

Disassembly

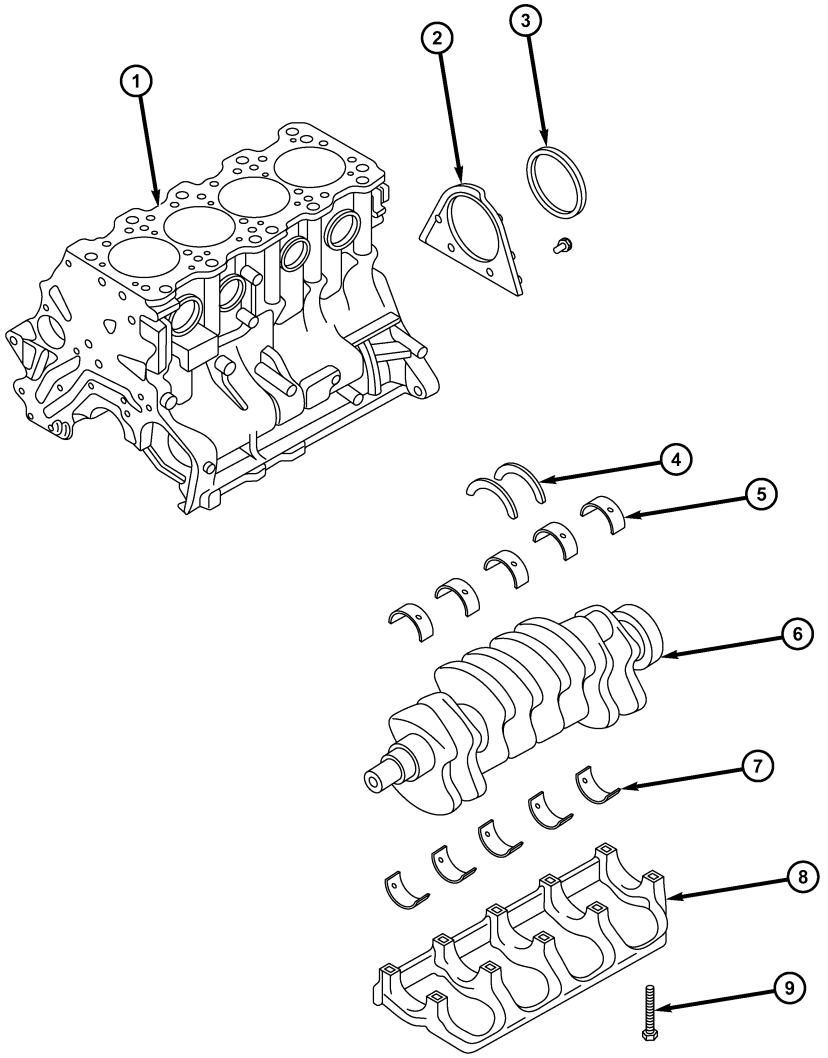

ltsm020194

1 - Cylinder Block	6 - Crankshaft
2 - Crankshaft Rear Oil Seal Housing	7 - Lower Crankshaft Bearing
3 - Crankshaft Rear Oil Seal	8 - Bearing Cap
4 - Crankshaft Thrust Bearing	9 - Bearing Cap Bolt
5 - Upper Crankshaft Bearing	

1. Remove the engine front cover.
2. Remove the crankshaft rear oil seal.

Downloaded from www.Manualslib.com manuals search engine

3. Remove the connecting rod cap nuts.

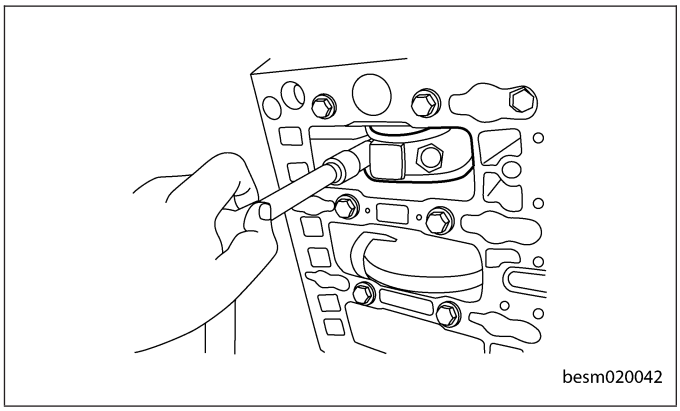
besm020042

4. Remove the connecting rod bearing cap.

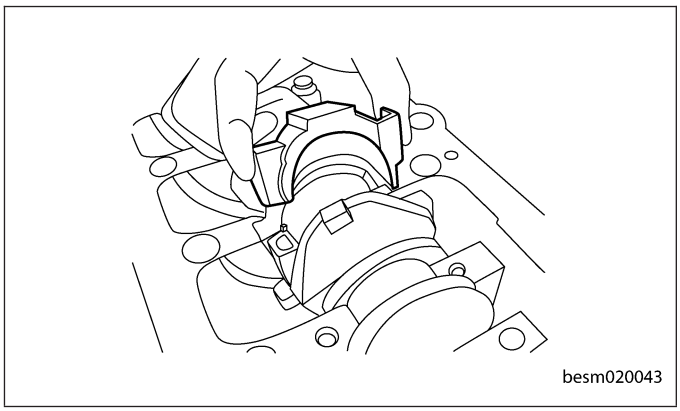
besm020043

5. Using a hammer handle or similar tool, push the piston and connecting rod assembly (1) out through the cylinder head side of the engine block.

   NOTE: Before removing the piston and connecting rod assembly, check the connecting rod side clearance.

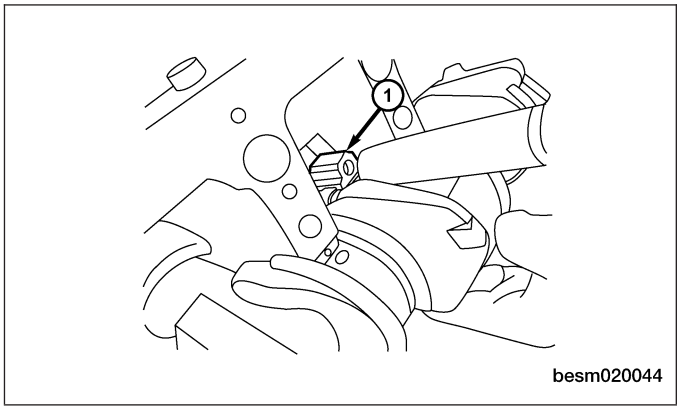

besm020044

6. Remove the connecting rod bearings.

   CAUTION: When removing the connecting rod side bearings, note the installation position. Keep them in the correct order.

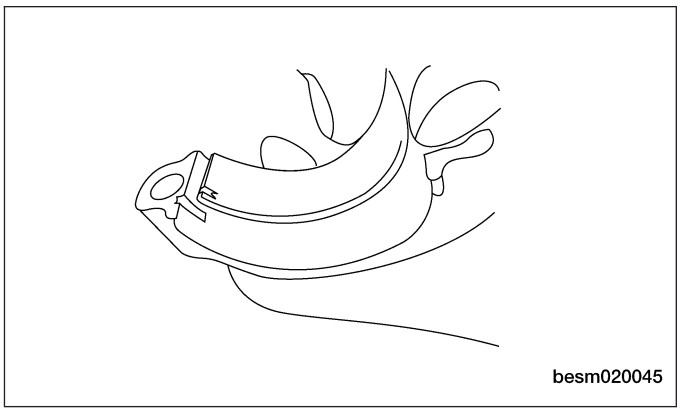
besm020045

Downloaded from www.Manualslib.com manuals search engine

Inspection

Crankshaft Axial Clearance

- Check the axial clearance of the crankshaft.

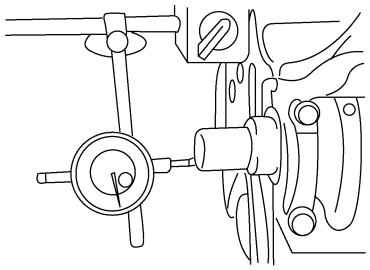

besm020076

CRANKSHAFT AXIAL CLEARANCE		
DESCRIPTION	SPECIFICATION	MAXIMUM LIMIT
Crankshaft	0.05 - 0.18 mm	0.25 mm

Crankshaft Bearing Oil Clearance (Plastigauge)

- Check the oil clearance of the crankshaft.
  - Clean all engine oil off of the crankshaft journals.
  - Cut the plastigauge into lengths as wide as the crankshaft journal.
  - Lay the plastigauge across the crankshaft journal.
  - Carefully install the main bearing cap.
  - Torque the main bearing cap to the specified torque.
  - Carefully disassemble the main bearing cap.
  - Use the measuring rule imprinted on the plastigauge package to measure the width of the widest part of the plastigauge.

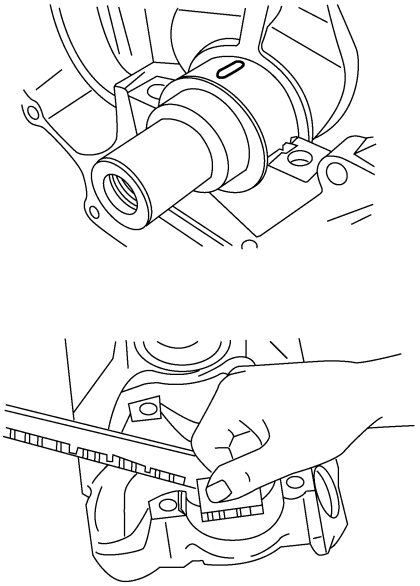

besm020077

Downloaded from www.Manualslib.com manuals search engine

CRANKSHAFT BEARING OIL CLEARANCE	
Standard Clearance	0.02 - 0.04 mm
Maximum Clearance	0.1 mm

Crankshaft Main Journal Roundness

- The crankshaft main journals should be checked for excessive wear, roundness and scoring. Limits of roundness on any crankshaft main journals should be held to 0.006 mm. Limits of roundness on any crankshaft rod journals should be held to 0.006 mm. DO NOT nick crank pin or bearing fillets. Limits of out of round on any crankshaft journals should be held to 0.006 mm.

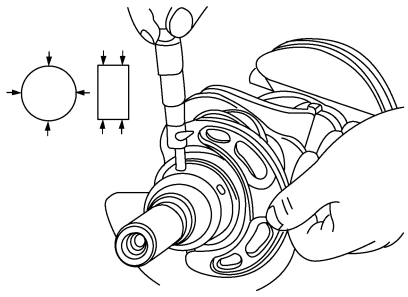

besm020075

CRANKSHAFT MAIN JOURNALS		
DESCRIPTION	SPECIFICATION	MAXIMUM LIMIT
Crankshaft Journal Roundness	0.006 mm	0.006 mm

Assembly

NOTE :
Cleanliness is extremely important during the engine assembly procedure. Any foreign material, including any material created while cleaning gasket surfaces, that enters the oil passages, coolant passages or the oil pan can cause engine failure.

Before installing the main bearing bolts, clean the threads and oil the bolts with clean engine oil.

Crankshaft Main Bearings

- Perform the following when replacing the crankshaft main bearings:
  - Measure and record the external diameter of the crankshaft main journals.

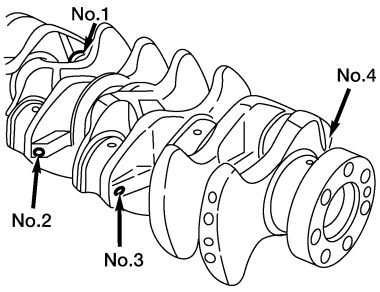

ltsm020119

Downloaded from www.Manualslib.com manuals search engine

- Identify the bearing markings (1) & (2) on the cylinder block.

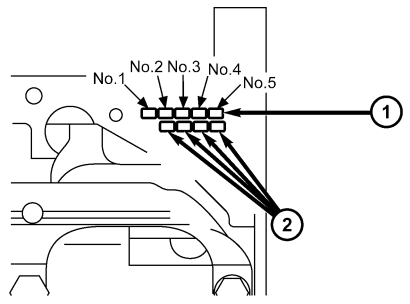

ltsm020127

- The bearing will have an identification mark (1) imprinted in the position as shown.

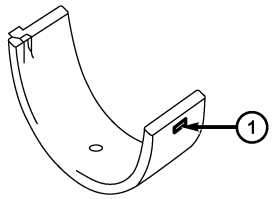

ltsm020181

IDENTIFYING CRANKSHAFT MAIN BEARINGS					
Combination of Crankshaft Main Journal and Spindle Bore				Identification mark and color of No. 1, 2, 4, 5 journal bearing	Identification mark and color of No. 3 journal bearing
Crankshaft Main Journal			Identification mark of spindle bore		
Group	Identification Color	External Diameter (mm)			
1	Yellow	56.994 - 57.000	0	Green	Black
			1	Yellow	Green
			2	None	Yellow
2	None	56.988 - 56.994	0	Yellow	Green
			1	None	Yellow
			2	Blue	None
3	White	56.982 - 56.988	0	None	Yellow
			1	Blue	None
			2	Red	Blue

NOTE :
As an example, if the identification color of the crankshaft main journal is yellow and the identification mark of spindle bore is “1”, choose the No. 1,2,4,5 bearing of which identification mark is “2” and identification color is “yellow” and No.3 bearing of which identification mark is “1” and identification color is “green”.

Downloaded from www.Manualslib.com manuals search engine

- Main bearing and thrust bearing installation.
  - Install the main bearings with oil grooves on the cylinder block side.
  - Install the main bearings without oil grooves (2) on the bearing cap.
  - Install the two thrust bearings on crankshaft journal No. 3. Apply clean oil to the surface of thrust bearing.
  - The grooved (1) side of the thrust bearing should face towards the crankshaft.

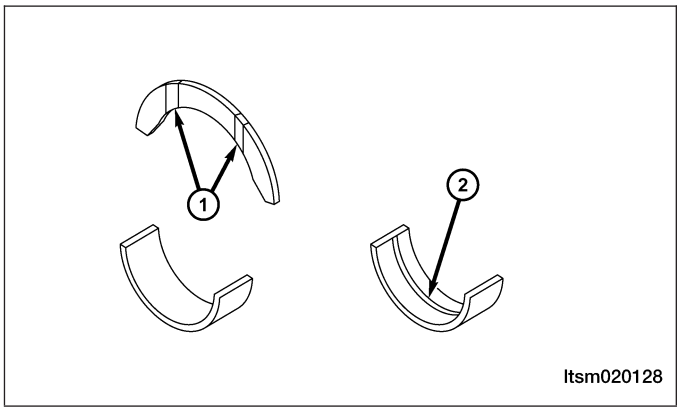

Main Bearing Caps and Bolts

- Install the main bearing caps with the arrow on the main caps (1) facing the front of the engine.
- Install the main bearing cap bolts in the sequence shown.
- Torque the bearing cap bolts in the sequence shown to 25 N·m.

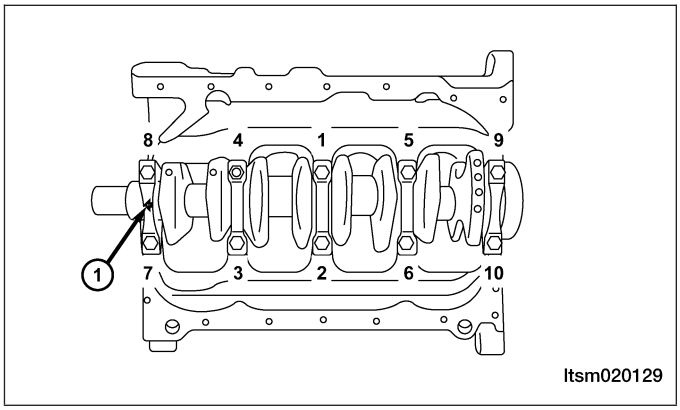

- Tighten the main bearing cap bolts an additional 90°- 100° in the sequence shown.

CAUTION:
If the bolts are over tightened (exceed angle of 100°), loosen the bolts and restart the torque sequence from Step 1

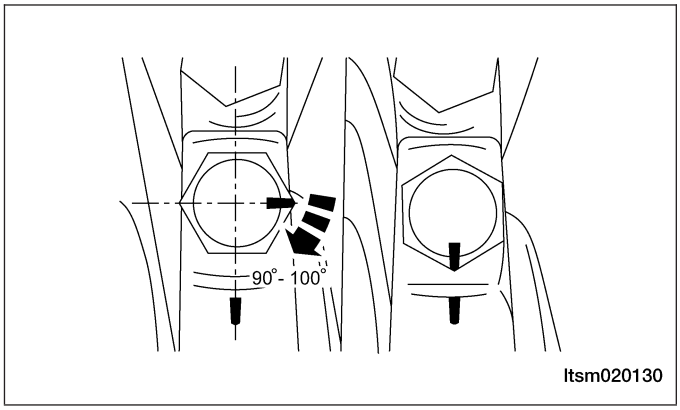

- After installing the main bearing caps, assure that the crankshaft rotates smoothly.

Downloaded from www.Manualslib.com manuals search engine

- Inspect the crankshaft axial clearance.
  - If the crankshaft axial clearance exceeds the maximum limit, replace the No.3 crankshaft thrust bearing.

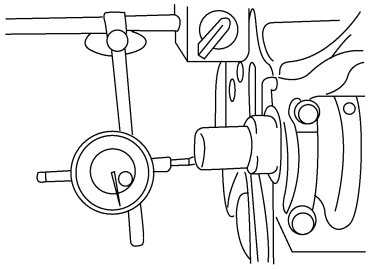

besm020076

CRANKSHAFT AXIAL CLEARANCE		
DESCRIPTION	SPECIFICATION	MAXIMUM LIMIT
Crankshaft	0.05 - 0.18 mm	0.25 mm

Downloaded from www.Manualslib.com manuals search engine

CYLINDER HEAD UNIT REPAIR

Cylinder Head

Specifications

Torque Specifications

DESCRIPTION	TORQUE (N·m)
Cylinder Head Bolts	1st Step: Tighten the bolt to 78 N·m 2nd Step: Completely loosen the bolt 3rd Step: Retighten the bolt to 20 N·m 4th Step: Tighten the bolt an additional 90° 5th Step: Finish tightening the bolt an additional 90°
Cylinder Head Cover Bolts	11 N·m

Clearance Specifications

DESCRIPTION	SPECIFICATION (mm)
Cylinder Head Flatness	0.03
Intake Valve Deflection	0.02
Exhaust Valve Deflection	0.04
Spring Height	51

Disassembly

NOTE :
The following special tools are required to perform the repair procedure:
- MD-998772 - Valve Spring Compressor
- MD-998774 - Valve Oil Seal Installer

NOTE :
Replacement cylinder head comes complete with valves, seals, springs, retainers, keepers, tappets, and camshafts.

1. Remove camshaft.
2. Using the special tool MD-998772 (1), compress the valve spring.
3. Remove the valve keeper, valve spring retainer and valve spring.
4. Push the valve stem from the cylinder head and remove the valve.

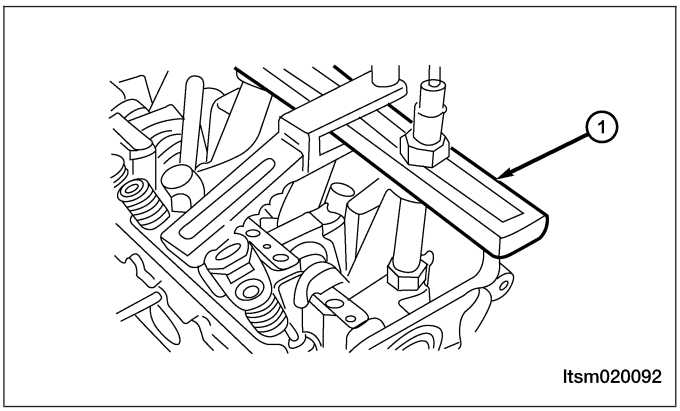

Downloaded from www.Manualslib.com manuals search engine

5. Using special tool CH-20013 (1), Remove the valve oil seal.
6. Remove the valve guide.
7. Remove the spark plugs.

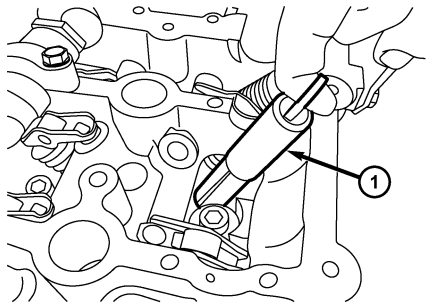

ltsm020225

Inspection

- Cylinder head must be flat within 0.03 mm.
- Inspect camshaft bearing journals for scoring.
- Remove carbon and varnish deposits from inside of valve guides with a valve guide cleaner.
- Check the valve guide height.

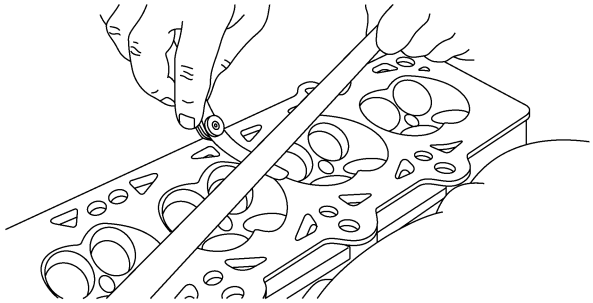
besm020068

Assembly

1. Install new valve guide if necessary.
2. Install new valve seat if necessary.
3. Using special tool MD-998774 (1), install the new valve oil seal.

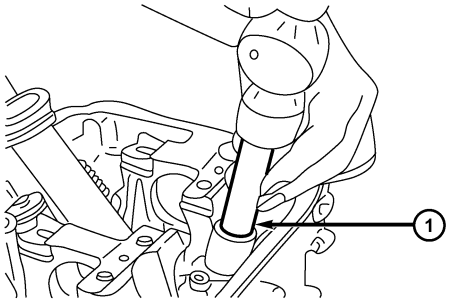

ltsm020094

4. Install the valves into the cylinder head (larger diameter on intake side).
5. Install the valve springs.
6. Install the valve spring retainers.

Downloaded from www.Manualslib.com manuals search engine

7. Using valve spring compressor MD-998772 (1), compress the valve springs.
8. Install the valve keepers.
9. Strike the valve stem lightly with a plastic hammer after installation to verify proper assembly.

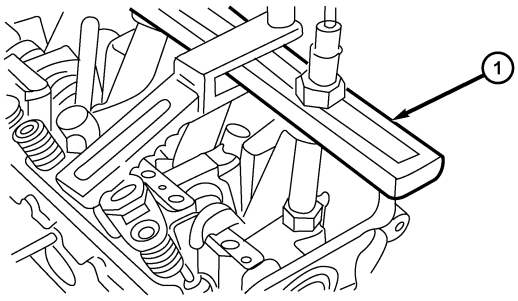

ltsm020092

Camshaft

Specifications

Camshaft Specifications

DESCRIPTION	SPECIFICATION	MINIMUM LIMIT
Intake Cam Lobe Height	37.5 mm	37 mm
Exhaust Cam Lobe Height	36.99 mm	36.49 mm

Downloaded from www.Manualslib.com manuals search engine

Disassembly

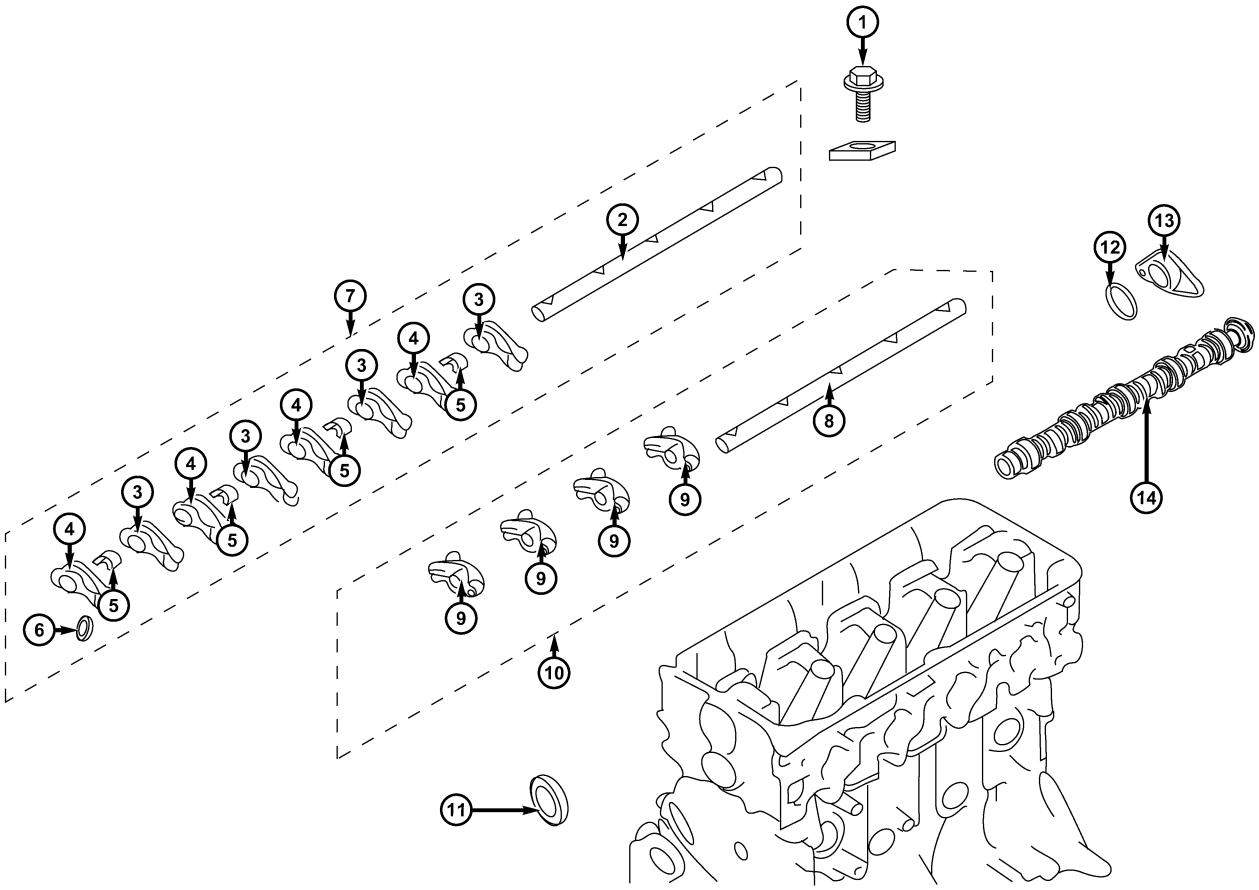

ltsm020081

1 - Rocker Shaft Retaining Bolt	8 - Exhaust Rocker Arm Shaft
2 - Intake Rocker Arm Shaft	9 - Rocker Arm
3 - Rocker Arm	10 - Rocker Arm and Rocker Shaft
4 - Rocker Arm	11 - Camshaft Oil Seal
5 - Rocker Shaft Spring	12 - O-Ring
6 - Hydraulic Adjuster	13 - Camshaft Thrust Plate
7 - Rocker Arm and Rocker Shaft	14 - Camshaft

1. Remove the rocker shaft retaining bolt.
2. Remove the rocker arms.
3. Remove the camshaft thrust plate retaining bolts.
4. Remove the camshaft and then remove the camshaft seal.

Downloaded from www.Manualslib.com manuals search engine

Camshaft

- Measure the camshaft cam lobe height.
- If wear is beyond the limit, replace the camshaft.

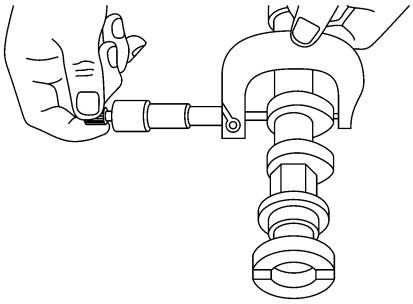

besm020037

CAMSHAFT LOBE HEIGHT		
DESCRIPTION	STANDARD LOBE HEIGHT	MINIMUM LOBE HEIGHT
Intake Cam Lobe Height	37.5 mm	37 mm
Exhaust Cam Lobe Height	36.99 mm	36.49 mm

Hydraulic Adjusters

CAUTION:

The hydraulic adjusters are a precision part. There should not be any dust or foreign matter on its surface. Do not disassemble the hydraulic adjusters. It is required to use clean diesel oil to clean the hydraulic adjusters.

- Soak the hydraulic adjusters in clean diesel oil.
- Using special tool MD-998442 (1) and MD-998441 (2), press the steel ball on the inside of the hydraulic adjuster and remove all air by moving the plunger up and down 4-5 times.

NOTE :

Use the special tool and check whether the plunger can be pressed. If it is hard to press the plunger, the hydraulic adjuster is normal. If it is easy to press the plunger, repeat the previous procedure and then check the hydraulic adjuster again. If the plunger is still loose, the hydraulic adjuster should be replaced.

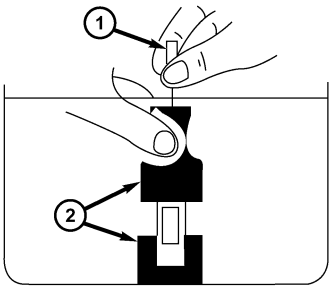

ltsm020088

CAUTION:

After the hydraulic adjuster has been prepared, it should be kept erect to avoid the loss of diesel oil.

Downloaded from www.Manualslib.com manuals search engine

- Using special tool MD-998440 (1) (return leakage tester), install the hydraulic adjuster.
- After the plunger has moved slightly (0.2 - 0.5 mm), measure the time it takes to move an additional 1.0 mm. If the measurement value is not within specifications, replace the hydraulic adjuster-.Standard Value: 4 - 20 seconds/1 mm (applying diesel oil of 15-20°C)

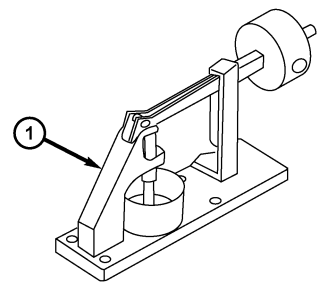

ltsm020159

Rocker Arms

- Inspect the surface of the roller (2) on all rocker arms. If there is any damage, the rocker arm should be replaced.
- Inspect the roller for smooth operation. If the roller does not revolve smoothly or is loose, the rocker arm should be replaced.
- Inspect the internal diameter (1) of the rocker arms. If there is any damage, the rocker arm should be replaced.

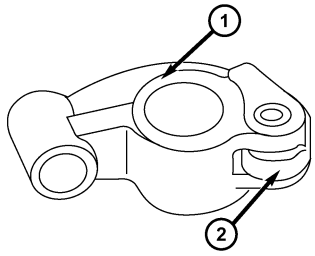

ltsm020037

Valve & Valve Guides

Specifications

Valve & Valve Guide Specifications

DESCRIPTION	SPECIFICATION	LIMIT
Intake Valve Deflection	0.02 mm	0.02 mm
Exhaust Valve Deflection	0.04 mm	0.04 mm
Intake Valve Clearance	0.020 - 0.050 mm	0.10 mm
Exhaust Valve Clearance	0.030 - 0.070 mm	0.15 mm
Intake Valve Edge Thickness	1.0 mm	0.5 mm
Exhaust Valve Edge Thickness	1.2 mm	0.7 mm
Intake Valve Height	112.30 mm	111.80 mm
Exhaust Valve Height	114.11 mm	113.61 mm
Intake Valve Guide Height	49.30 mm	49.80 mm
Exhaust Valve Guide Height	49.30 mm	49.80 mm

Downloaded from www.Manualslib.com manuals search engine

Disassembly

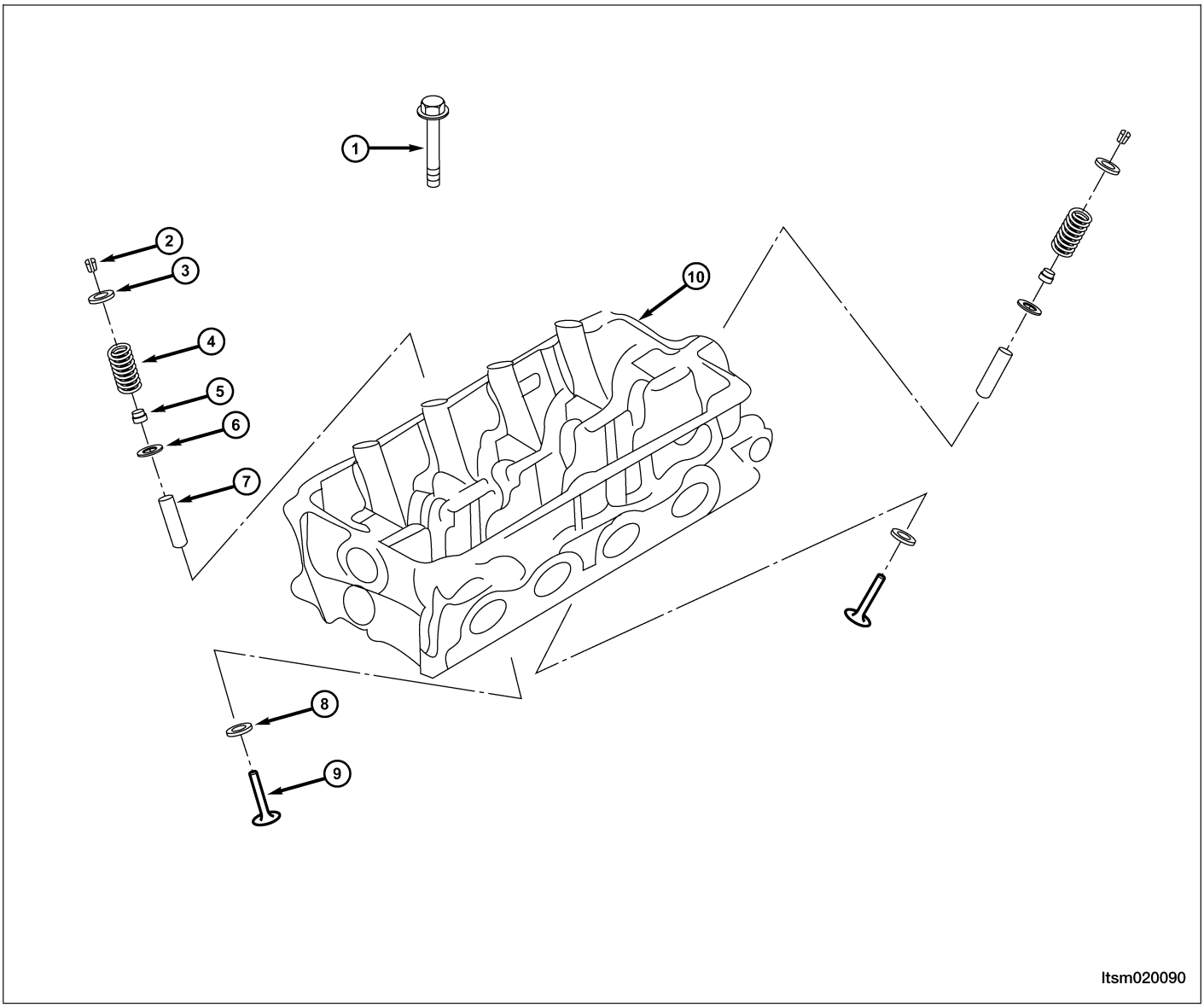

1 - Cylinder Head Bolt	6 - Lower Valve Spring Retainer
2 - Valve Spring Keepers	7 - Valve Guide
3 - Upper Valve Spring Retainer	8 - Valve Seat
4 - Valve Spring	9 - Valve
5 - Valve Oil Seal	10 - Cylinder Head

NOTE :
The following special tools are required to perform the repair procedure:
- MD-998772 - Valve Spring Compressor

Downloaded from www.Manualslib.com manuals search engine

1. Using the special tool MD-998772 (1), compress the valve springs.
2. Remove the valve keeper, valve spring retainer and valve spring.
3. Remove valves from the cylinder head.

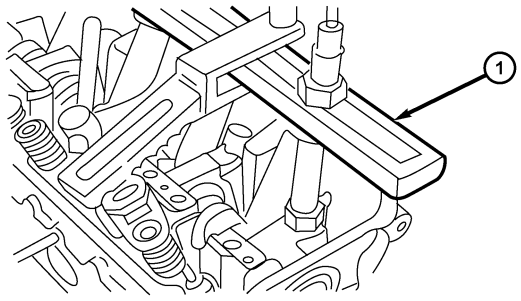

ltsm020092

Valves

- Clean all valves thoroughly and discard burned, warped and cracked valves.
- Check valve seats and valve faces for damage.
- When reconditioning valves follow the specifications outlined for both intake and exhaust valves.

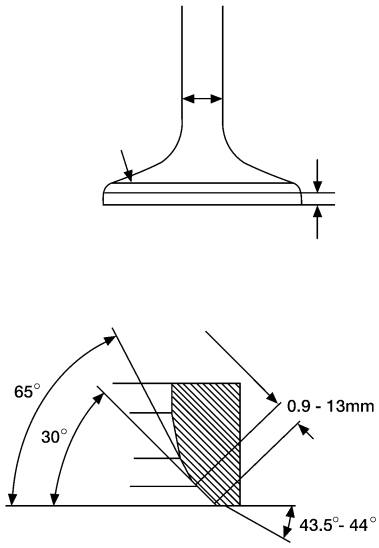

besm020066

- Measure valve deflection.

VALVE DEFLECTION LIMIT (DIAL GAUGE READING)	
Intake Valve	0.02 mm
Exhaust Valve	0.04 mm

Downloaded from www.Manualslib.com manuals search engine

- If it exceeds the limit, check valve to valve guide clearance (1) .
  - Measure valve stem diameter (2) and valve guide inner diameter (3).
  - Check that clearance is within specification.
  - If it exceeds the limit, replace valve or valve guide.

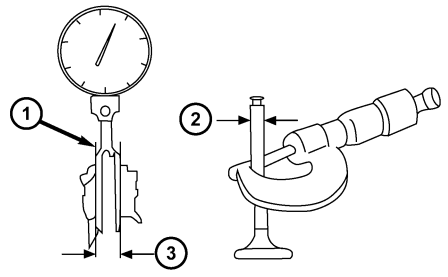

ltsm020101

VALVE TO VALVE GUIDE CLEARANCE		
DESCRIPTION	SPECIFICATION	LIMIT
Intake Valve Clearance	0.020 - 0.050 mm	0.10 mm
Exhaust Valve Clearance	0.030 - 0.070 mm	0.15 mm

- Check the valve edge thickness and valve contact area. Repair or replace the valve if necessary.

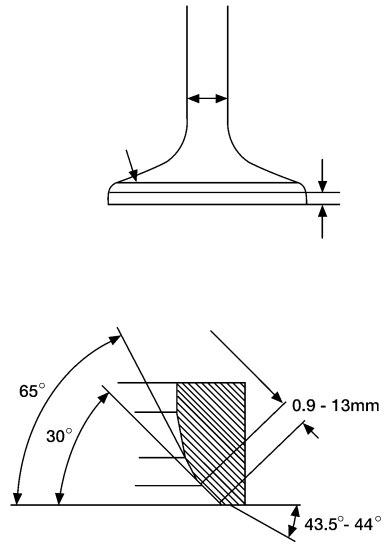

besm020066

VALVE EDGE THICKNESS		
DESCRIPTION	SPECIFICATION	LIMIT
Intake Valve Edge Thickness	1.0 mm	0.5 mm
Exhaust Valve Edge Thickness	1.2 mm	0.7 mm

Downloaded from www.Manualslib.com manuals search engine

- Measure the total valve height (1). If the valve height is less than the limit value, the valve should be replaced.

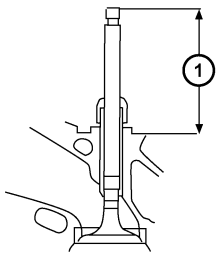

ltsm020102

VALVE HEIGHT		
DESCRIPTION	SPECIFICATION	LIMIT
Intake Valve Height	112.30 mm	111.80 mm
Exhaust Valve Height	114.11 mm	113.61 mm

Valve Guides

- Check the clearance (1) between the valve guide and the valve stem, if it exceeds the limit, check valve to valve guide clearance.
  - Measure valve stem diameter (2) and valve guide inner diameter (3).
  - Check that clearance is within specification.
  - If it exceeds the limit, replace valve or valve guide.

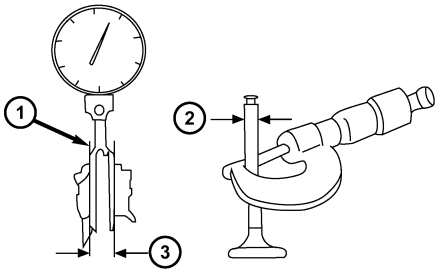

ltsm020101

VALVE TO VALVE GUIDE CLEARANCE		
DESCRIPTION	SPECIFICATION	LIMIT
Intake Valve Clearance	0.020 - 0.050 mm	0.10 mm
Exhaust Valve Clearance	0.030 - 0.070 mm	0.15 mm

Valve Guide Replacement

- Press the original valve guide out of the cylinder head.
- Ream the valve guide hole until the hole diameter is the size of the new enlarged valve guide to be installed.

CAUTION:

When replacing valve guides, do not use a new valve guide that is the same size as the original valve guide.

- Enlarge valve guide size 0.05 (11.05 - 11.068 mm)
- Enlarge valve guide size 0.25 (11.25 - 11.268 mm)
- Enlarge valve guide size 0.50 (11.50 - 11.518 mm)

Downloaded from www.Manualslib.com manuals search engine

- Install the new valve guide from the top of the cylinder head as shown in the illustration.
  - Intake valve guide length: 45.5 mm
  - Exhaust valve guide length: 50.5 mm

CAUTION:
The intake and exhaust valves are different lengths, use care when replacing the valve guides to install the correct valve guide.

- Install the valve guide to the specified height (1) of 14 mm.

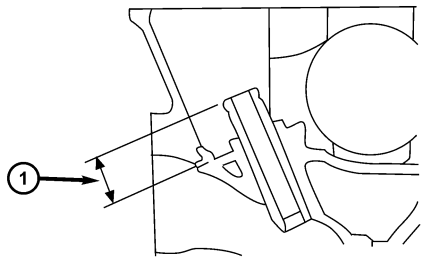

ltsm020106

- After installing the valve guide, insert the new valve and check for smooth movement.

Valve Seats

- Before machining the valve seat, check the clearance between the valve guide and the valve stem. If the clearance is excessive, repair the valve and valve guide if necessary before machining the valve seat.
- Repair the width and angle of the valve seat until the valve seat meets specified values.
- After repairing the valve seat, use valve lapping compound to lap the valves and seats in pairs.

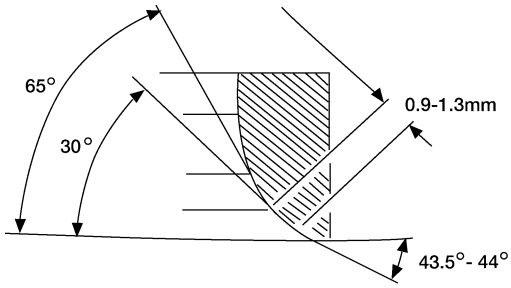

ltsm020103

Valve Seat Replacement

- Cut out a portion of the original valve seat and remove the valve seat from the cylinder head.
- Select the replacement valve seat according to the outer diameter of the enlarged valve seat.

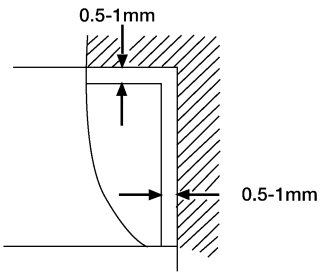

ltsm020104

REPLACEMENT VALVE SEAT SIZES		
Intake valve seat	Enlargement size 0.30 mm	34.435 - 34.455 mm
	Enlargement size 0.60 mm	34.735 - 34.755 mm
Exhaust valve seat	Enlargement size 0.30 mm	31.935 - 31.955 mm
	Enlargement size 0.60 mm	32.235 - 32.255 mm

Downloaded from www.Manualslib.com manuals search engine

NOTE :
Before installing the valve seat, heat the cylinder head to the temperature of about 250°, or cool the valve seat in liquid nitrogen in order to install the valve seat.
- Machine the new valve seat and valve to proper specifications.

Assembly

1. Install the valves into the cylinder head (larger diameter on intake side).
2. Using special tool MD-998774, install the new valve oil seal.
3. Install the valve springs.
4. Install the valve spring retainers.
5. Using valve spring compressor MD-998772 (1), compress the valve springs.
6. Install the valve keepers.
7. Strike the valve stem lightly with a plastic hammer after installation to verify proper assembly.

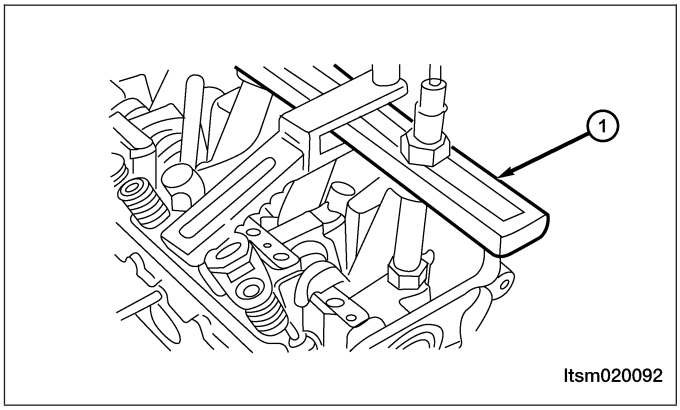

Valve Springs

Specifications

Valve Spring Specifications

DESCRIPTION	SPECIFICATION	LIMIT
Spring Free Length	51.0 mm	50.0 mm
Spring Center Line	≤ 2.0°	≤ 4.0°

Downloaded from www.Manualslib.com manuals search engine

Disassembly

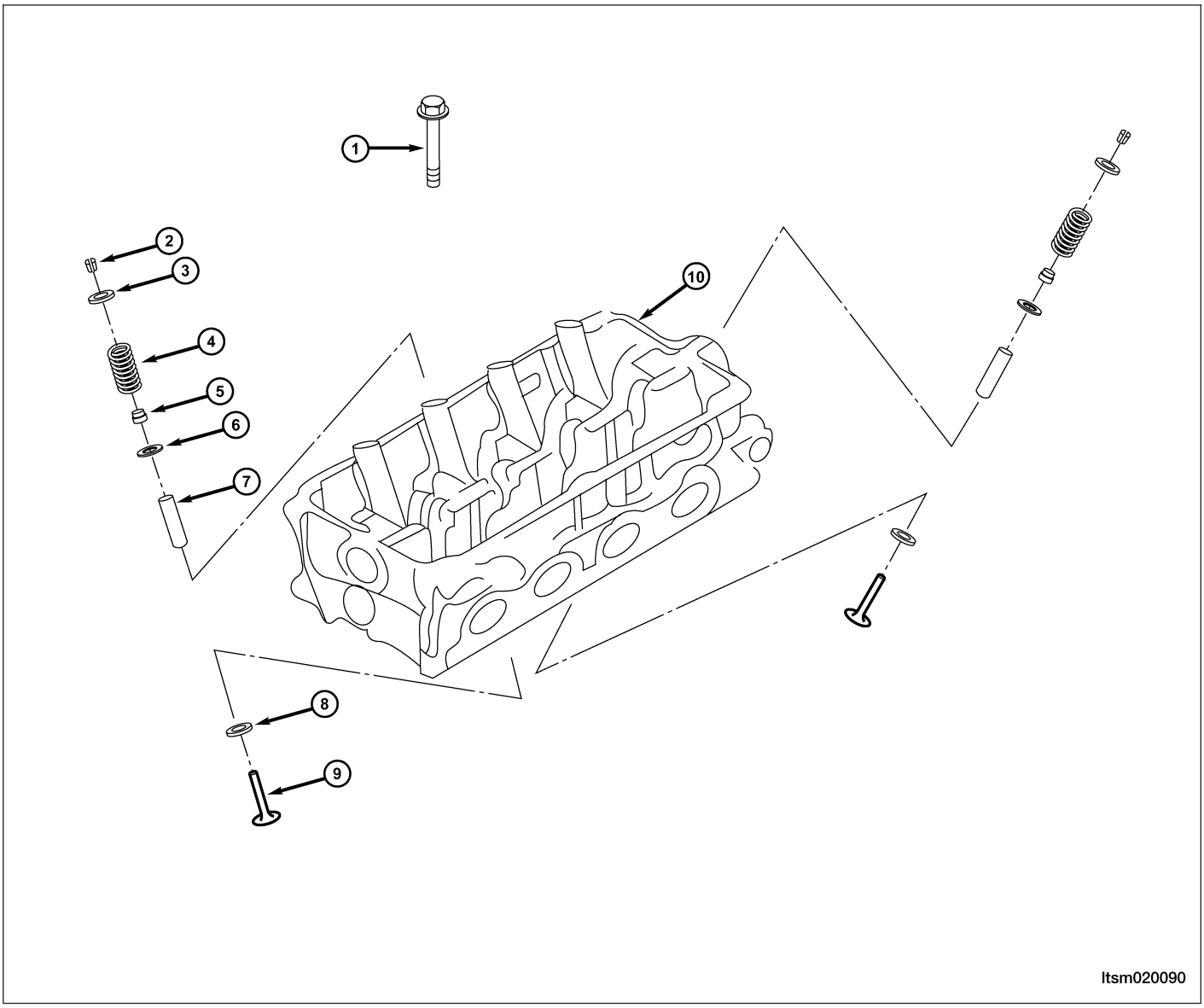

1 - Cylinder Head Bolt	6 - Lower Valve Spring Retainer
2 - Valve Spring Keepers	7 - Valve Guide
3 - Upper Valve Spring Retainer	8 - Valve Seat
4 - Valve Spring	9 - Valve
5 - Valve Oil Seal	10 - Cylinder Head

NOTE :
The following special tools are required to perform the repair procedure:
- MD-998772 - Valve Spring Compressor

Downloaded from www.Manualslib.com manuals search engine

1. Using the special tool MD-998772 (1), compress the valve springs.
2. Remove the valve keeper, valve spring retainer.
3. Remove the valve springs from the cylinder head.

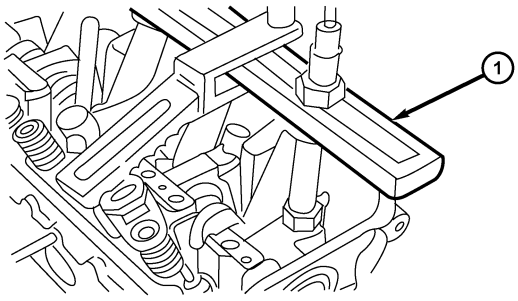

ltsm020092

Inspection

NOTE :
Whenever valves have been removed for inspection, reconditioning or replacement, valve springs should be tested for correct load.

- Check the valve spring length/height. Discard the springs that do not meet specifications.
- The following specifications apply to both intake and exhaust valve springs.

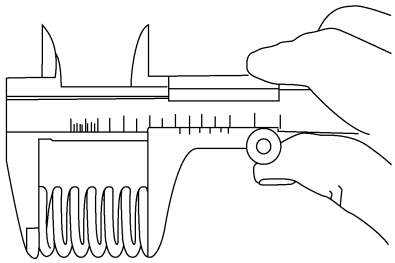
besm020072

VALVE SPRING LENGTH/HEIGHT		
DESCRIPTION	**SPECIFICATION**	**LIMIT**
Spring Free Length	51.0 mm	50.0 mm

Downloaded from www.Manualslib.com manuals search engine

- Check the valve spring center line. Discard the springs that do not meet specifications.
- The following specifications apply to both intake and exhaust valve springs.

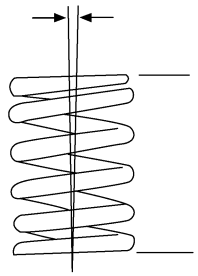

ltsm020100

VALVE SPRING CENTER LINE		
DESCRIPTION	SPECIFICATION	LIMIT
Spring Center Line	≤ 2.0°	≤ 4.0°

Assembly

1. Install the valve springs (2).
2. Install the valve spring retainers (1).
3. Using valve spring compressor MD - 998772, compress the valve springs.
4. Install the valve keepers.
5. Strike the valve stem lightly with a plastic hammer after installation to verify proper assembly.

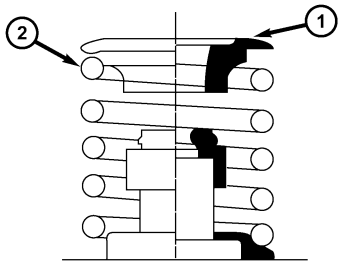

ltsm020039

Downloaded from www.Manualslib.com manuals search engine

ELECTRONIC ENGINE CONTROLS
03

CONTENTS

	page
1.6L & 1.8L Engine Controls	**03-1**
2.0L Engine Controls	**03-227**
2.4L Engine Controls	**03-441**
2.4L Engine Symptom Diagnosis	**03-543**
Ignition Control	**03-565**
Evaporative Emissions	**03-576**

1.6L & 1.8L ENGINE CONTROLS

GENERAL INFORMATION	03-3
Description	03-3
Operation	03-3
Electronic Engine Control Input & Output Device Failure Modes	03-4
Specifications	03-5
Special Tools	03-6
Electrical Schematics	03-9
ECM Connector Pin-Out Table	03-20
DIAGNOSIS & TESTING	03-22
Diagnostic Help	03-22
Intermittent DTC Troubleshooting	03-22
Ground Inspection	03-22
Electronic Throttle Control Actuator Self-Learning Operation Introduction	03-23
Diagnostic Trouble Code (DTC) List	03-23
ECM Power Supply and Ground Circuit Test	03-28
Power Supply and Ground Circuit	03-28
Diagnostic Trouble Code (DTC) Tests	03-35
P0016 - Camshaft Position-Crankshaft Position Correlation Error	03-35
P0031 - O_2 Sensor 1 Heater Control Circuit Low	03-45
P0032 - O_2 Sensor 1 Heater Control Circuit High	03-51
P0102 - Mass Or Volume Air Flow Circuit Low Input	03-57
P0103 - Mass Or Volume Air Flow Circuit High Input	03-63
P0105 - Manifold Absolute Pressure/ Barometric Pressure Circuit, P0106 - Manifold Absolute Pressure Or Barometric Pressure Range/ Performance	03-68
P0107 - Manifold Absolute Pressure Or Barometric Pressure Low Input, P0108 - Manifold Absolute Pressure Or Barometric Pressure High Input	03-73
P0112 - Intake Air Temperature Circuit Low Input	03-78
P0113 - Intake Air Temperature Circuit High Input	03-84
P0117 - Engine Coolant Temperature Circuit Low Input	03-91
P0118 - Engine Coolant Temperature Circuit High Input	03-96
P0122 - Throttle Position Sensor A Circuit Low Input	03-101
P0123 - Throttle Position Sensor A Circuit High Input	03-107
P0132 - O_2 Sensor 1 Circuit High Voltage	03-112
P0171 - Fuel Trim System Too Lean	03-118
P0172 - Fuel Trim System Too Rich	03-131
P0201 - Cylinder 1 - Injector Circuit, P0202 - Cylinder 2 - Injector Circuit, P0203 - Cylinder 3 - Injector Circuit, P0204 - Cylinder 4 - Injector Circuit	03-142
P0221 - Throttle Position Sensor B Performance	03-149

Downloaded from www.Manualslib.com manuals search engine

P0261 - Cylinder 1 Injector Circuit Low, P0264 - Cylinder 2 Injector Circuit Low, P0267 - Cylinder 3 Injector Circuit Low, P0270 - Cylinder 4 Injector Circuit Low 03-157
P0262 - Cylinder 1 Injector Circuit High, P0265 - Cylinder 2 Injector Circuit High, P0268 - Cylinder 3 Injector Circuit High, P0271 - Cylinder 4 Injector Circuit High 03-164
P0321 - Distributor Engine Speed In Phase Circuit Performance 03-171
P0324 - Knock Control System Error 03-177
P0343 - Camshaft Position Sensor Circuit High Input 03-181
P0444 - Evaporative Emission System Purge Control Valve Circuit Open 03-187
P0506 - Idle Control System RPM Lower Than Expected 03-191
P0601 - Internal Control Module Memory Check Sum Error, P0604 - Internal Controller Module Random Access Memory (RAM) Error, P0605 - Internal Controller Module ROM Test Error, P0606 - ECM Processor 03-193
P0602 - ECM Programming Error 03-195
P0645 - A/C Clutch Relay Circuit 03-197
P1545 - Throttle Position Control Malfunction 03-202
P2138 - Pedal Position Sensor Performance 03-210

ON-VEHICLE SERVICE 03-217

Engine Coolant Temperature (ECT) Sensor 03-217
Description 03-217
Operation 03-217
Removal & Installation 03-217

Knock Sensor 03-218
Description 03-218
Operation 03-218
Removal & Installation 03-218

Oxygen Sensor 03-218
Description 03-218
Operation 03-218
Upstream Oxygen Sensor 03-219
Downstream Oxygen Sensor 03-219
Removal & Installation - Upstream Oxygen Sensor 03-219
Removal & Installation - Downstream Oxygen Sensor 03-219

Crankshaft Position (CKP) Sensor 03-220
Description 03-220
Operation 03-220
Removal & Installation 03-220

Camshaft Position (CMP) Sensor 03-220
Description 03-220
Operation 03-221
Removal & Installation 03-221

Vehicle Speed Sensor 03-221
Description 03-221
Operation 03-221
Removal & Installation 03-221

Accelerator Sensor 03-221
Description 03-221
Operation 03-222
Removal & Installation 03-222

Manifold Absolute Pressure Sensor - 1.6L 03-222
Description 03-222
Operation 03-222
Removal & Installation 03-222

Air Flow Sensor - 1.8L 03-223
Description 03-223
Operation 03-223
Removal & Installation 03-223

Accelerator Pedal Position Sensor 03-224
Description 03-224
Operation 03-224
Removal & Installation 03-224

Electronic Throttle Control Actuator 03-225
Description 03-225
Operation 03-225
Removal & Installation 03-225

Engine Control Module (ECM) 03-226
Description 03-226
Operation 03-226
Removal & Installation 03-226

Downloaded from www.Manualslib.com manuals search engine

GENERAL INFORMATION

Description

The Engine Control Module (ECM) consists of a microcomputer and electrical connectors containing circuits for signal input, output, power supply and ground. The ECM controls the engine functions.

The following are the input and output components monitored by the ECM. The monitored functions include components from the engine, ignition, transaxle, air conditioning, or any other ECM supported subsystem.

ECM Inputs

- Brake Switch Sensor
- Refrigerant Pressure Sensor
- Camshaft Position (CMP) Sensor
- Crankshaft Position (CKP) Sensor
- Engine Coolant Temperature (ECT) Sensor
- Manifold Absolute Pressure (MAP) Sensor (1.6L)
- Air Flow Sensor (1.8L)
- Throttle Position Sensor (Integral with Electronic Throttle Control Actuator)
- Power Steering Switch
- Accelerator Pedal Position (APP) Sensor
- Knock Sensor
- Oxygen Sensor (Upstream & Downstream)
- Vehicle Speed Sensor
- Clutch Pedal Switch (Manual transaxle only)

ECM Outputs

- Canister Control Valve
- Fuel Injectors
- Fuel Pump Relay
- Electronic Throttle Control Actuator
- Ignition Coil
- A/C Compressor
- Cooling Fan
- Oxygen Sensor Heater (Upstream & Downstream)

Operation

The ECM monitors components and circuits, and tests them in various ways depending on the hardware, function, and type of signal. For example, analog inputs, such as throttle position or engine coolant temperature are typically checked for opens, shorts and out-of-range values. This type of monitoring is carried out continuously. Some digital inputs like vehicle speed or crankshaft position rely on rationality checks - checking to see if the input value makes sense at the current engine operating conditions. These types of tests may require monitoring several components and can only be carried out under appropriate test conditions.

The ECM is a pre-programmed, microprocessor-based digital computer. It regulates ignition timing, air-fuel ratio, emission control devices, charging system, certain transmission features, speed control, air conditioning compressor clutch engagement and idle speed. The ECM can adapt its programming to meet changing operating conditions.

Downloaded from www.Manualslib.com manuals search engine

Electronic Engine Control Input & Output Device Failure Modes

NUMBER	ITEM	FAILURE MODE	CORRECTION
1	CKP	• Engine is hard to start. • The engine RPM will be limited after the engine starts. • The highest RPM is less than 3800. • Excessive exhaust emissions. • No ignition signal to the ECM. • The tachometer does not work. • Rough engine operation.	Replace
2	CMP	• The fuel injector ON time may vary from 720 degrees to 360 degrees. • The sensor output is not correct, the MIL light will turn on when with the second revolution after the engine starts. • Engine is hard to start. • The highest RPM is less than 4000.	Replace
3	APPS	• The MIL light will turn on. • Poor acceleration. • The engine RPM will be limited after the engine starts.	Replace
4	ECT	• Engine hard to start when cold. • Engine hard to start when hot. • Poor driving capability. • If the sensor circuit is shorted to power, the engine will run under the default values. • The temperature gauge indicates too high. • The temperature gauge indicates too low. • The cooling fan operates continuously on high speed. • The high temperature warning lamp will flash when the IP indicates low temperature.	Replace
5	MAF	• The cooling fan will operate for approximately 60 seconds on high speed after the ignition switch is turned off. • Poor acceleration. • Poor driving capability.	Replace
6	O_2 Sensor	• Poor fuel economy. • Excessive exhaust emissions. • Sluggish acceleration. • Poor driving capability.	Replace
7	Knock Sensor	• The engine produces an engine knock. • Overheated engine. • Excessive exhaust emissions. • Poor fuel economy. • Lack of engine power. • Internal engine damage.	Replace
8	ECM	• Unstable engine idle. • Poor acceleration. • Unable to start. • High engine idle. • The engine exhaust exceeds emission standards. • Engine is hard to start. • Air conditioner does not operate. • Fuel injector control failure. • Engine stalls out.	Replace
9	Ignition Coil	• Unstable idle. • Lack of engine power. • Poor fuel economy. • Excessive exhaust emissions. • Weak spark.	Replace

Downloaded from www.Manualslib.com manuals search engine

NUMBER	ITEM	FAILURE MODE	CORRECTION
10	Fuel Injector	• Unstable idle. • Lack of engine power. • Poor acceleration. • Engine will not start. • Plugged injector.	Replace
11	TPS	• Poor acceleration. • The MIL light will turn on.	Replace
12	EVAP	• The engine base fuel closed-loop control self-learning will be shut off. • The engine idle air control self-learning will be shut off. • Unstable idle or high idle.	Replace
13	Fuel Pump	• Noisy fuel pump operation. • Poor acceleration. • Engine will not start.	Replace
14	MAP	• Poor acceleration. • Unstable idle. • Rough engine operation.	Replace
15	IAT	• Intake air temperature will be equal to the coolant temperature.	Replace
16	Cooling Fan	• High engine temperature. • Poor air conditioner performance.	Replace
17	Accelerator Sensor	• Misfire • Poor driving capability. • Rough engine operation.	Replace

Specifications

Torque Specifications

DESCRIPTION	TORQUE (N·m)
Engine Coolant Temperature (ECT) Sensor	20
Knock Sensor	20
Oxygen Sensors	45
Crankshaft Position (CKP) Sensor	10
Camshaft Position (CMP) Sensor	7
Air Flow Sensor Bolts	5
Engine Control Module (ECM) Bolts	10
Accelerator Pedal Position (APP) Sensor	11
Electronic Throttle Control Actuator	10
Vehicle Speed Sensor	10
Manifold Absolute Pressure (MAP) Sensor	6

Downloaded from www.Manualslib.com manuals search engine

Special Tools

Diagnostic Scan Tool X-431	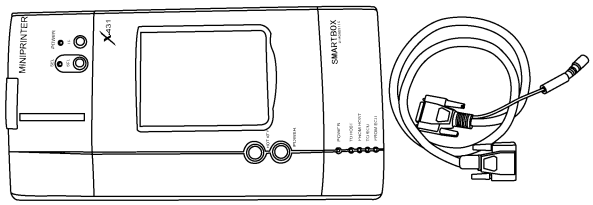
Engine Analyzer KES-200	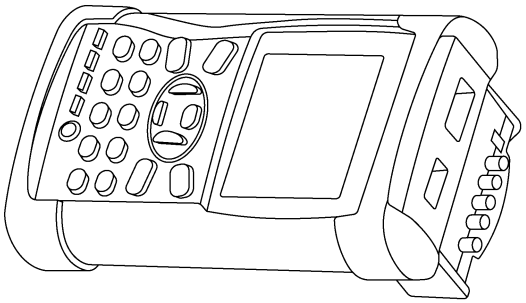
Digital Multimeter Fluke 15B & 17B	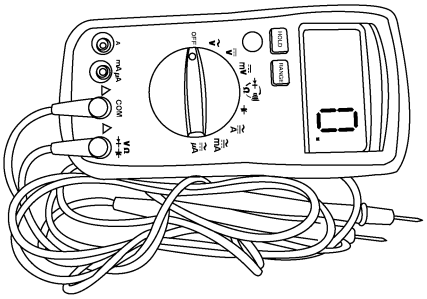

Downloaded from www.Manualslib.com manuals search engine

Compression Gauge	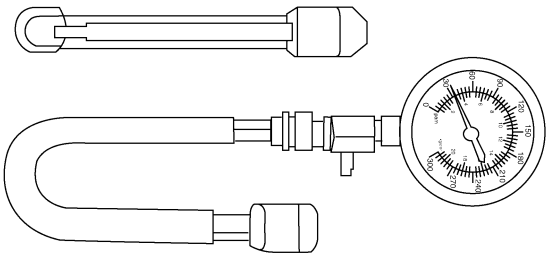 besm030009
Fuel Pressure Gauge	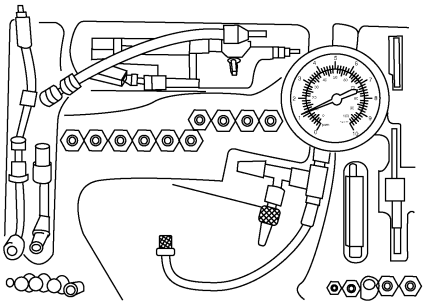 besm030008

Downloaded from www.Manualslib.com manuals search engine

Hardware Requirements

The hardware configuration of X-431 is as follows:

Diagnostic Scan Tool Configuration

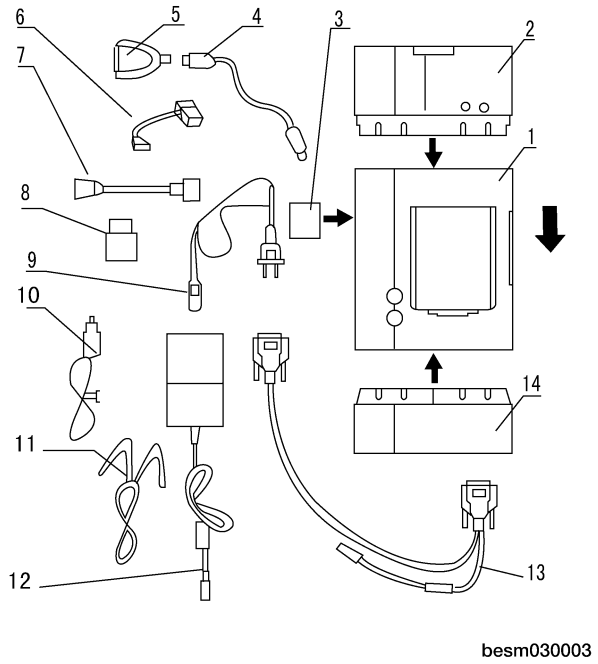

ITEM	NAME	FUNCTION
1	X-431 Main Unit	To Display Operational Buttons, Test Results, Help Information, etc.
2	Mini-Printer	To Print Test Results. (Optional)
3	CF Card	To Store Diagnostic Software and Data
4	USB Cable	To Connect CF Card Reader/Writer and Computer
5	CF Card Reader/Writer	To Read or Write Data On The CF Card
6	Mitsubishi-12+16 Pin Connector	To Diagnose Mitsubishi Electronic Control Systems On Chery B11 Series
7	Fiat-3 Pin Connector	To Diagnose Vehicles With Fiat-3 Pin Diagnostic Connector

ITEM	NAME	FUNCTION
8	Smart OBDII-16 Pin Connector	To Diagnose Other Systems Of Vehicle With OBDII-16 Pin Diagnostic Connector
9	Power Cord	To Connect AC 100 - 240 V Outlet and Power Adapter
10	Cigarette Lighter Cable	To Get Power From Vehicle Cigarette Lighter
11	Battery Cable W/Two Clips	To Get Power From Vehicle Battery
12	Power Adapter	To Convert 100 - 240 V AC Power Into 12 V DC Power
13	Main Cable	To Connect The Diagnostic Connector and Smartbox
14	Smartbox	To Perform Vehicle Diagnosis

Downloaded from www.Manualslib.com manuals search engine

Electrical Schematics

Electronic Engine Controls (Page 1 of 11)

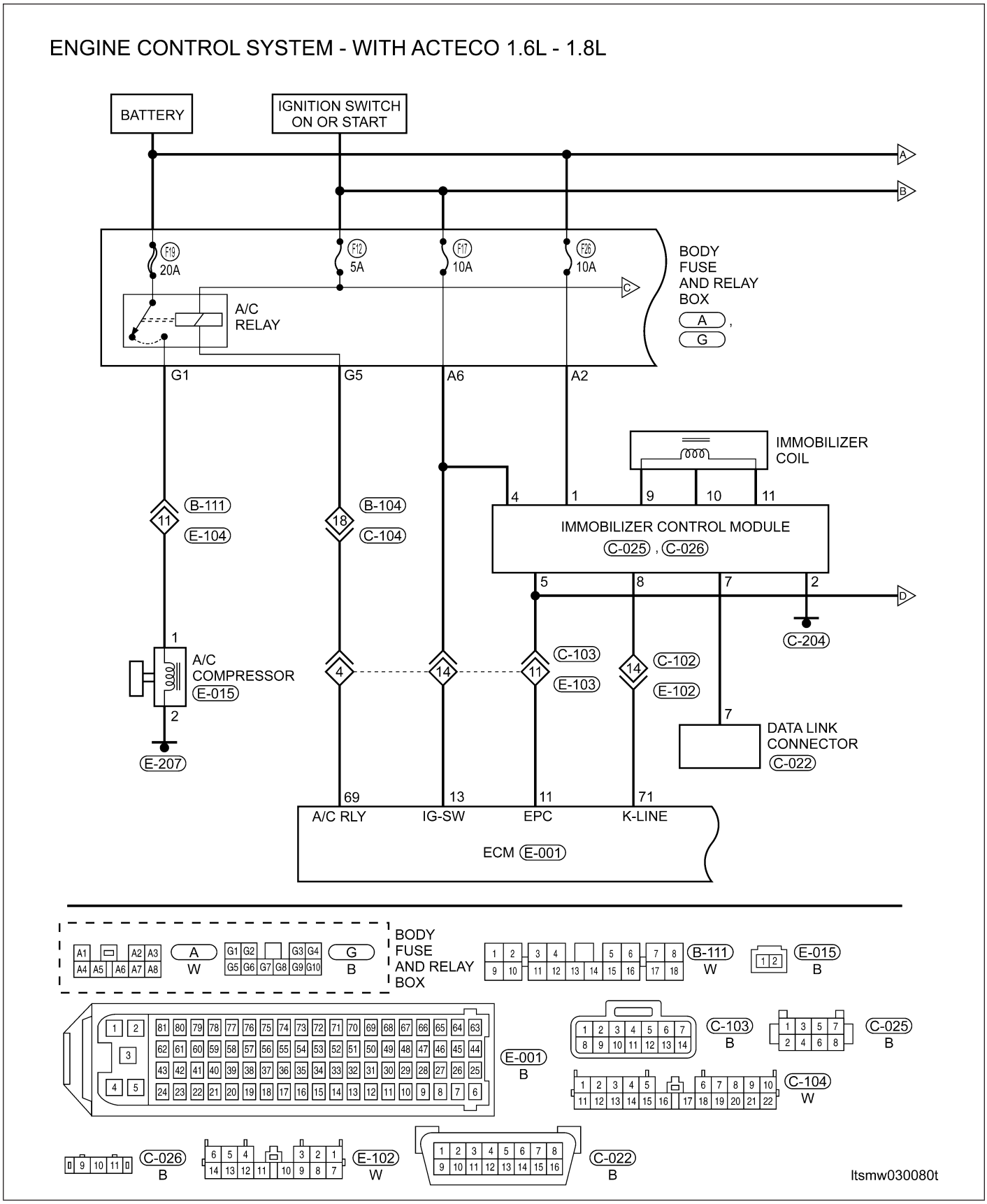

Downloaded from www.Manualslib.com manuals search engine

Electronic Engine Controls (Page 2 of 11)

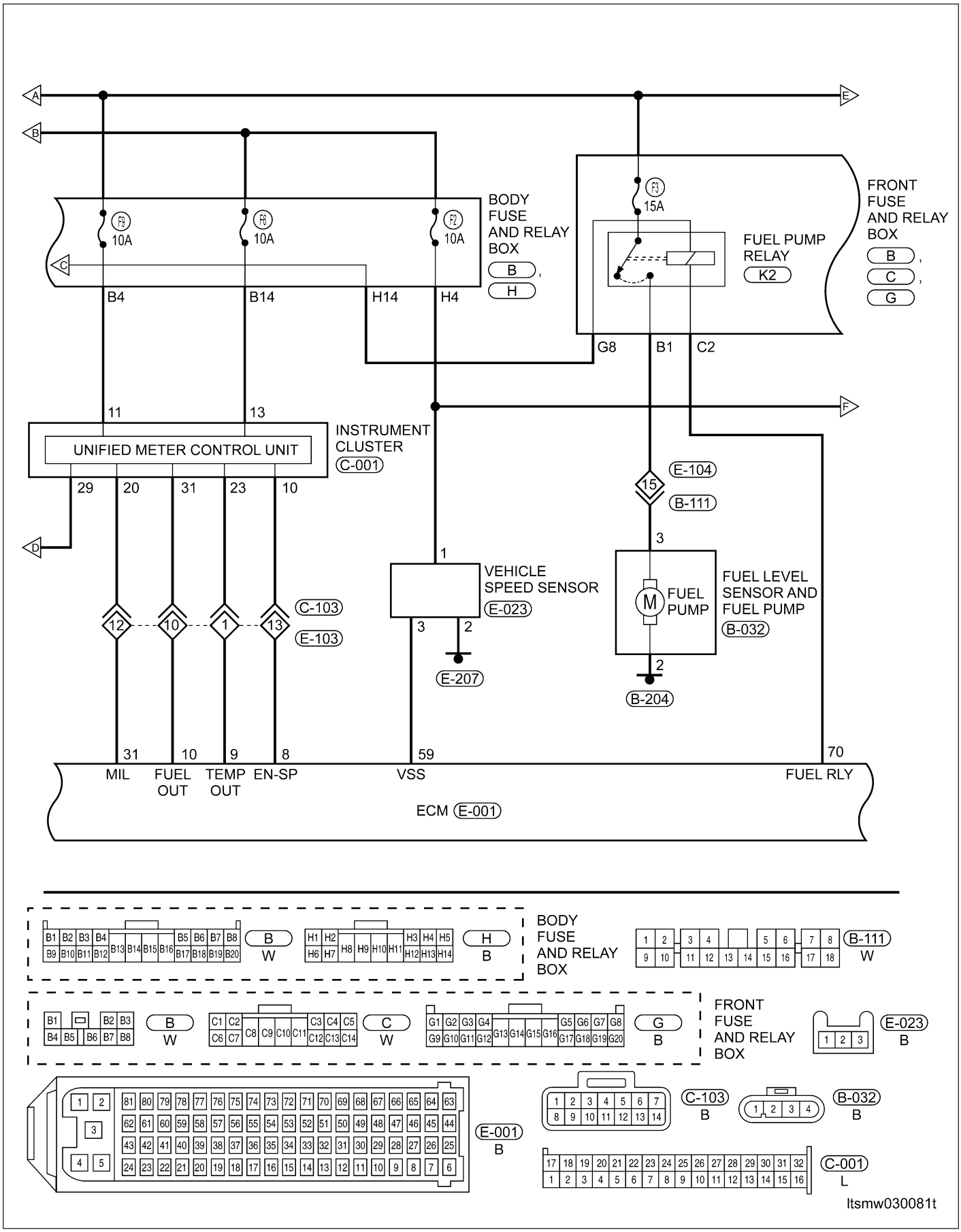

Downloaded from www.Manualslib.com manuals search engine

Electronic Engine Controls (Page 3 of 11)

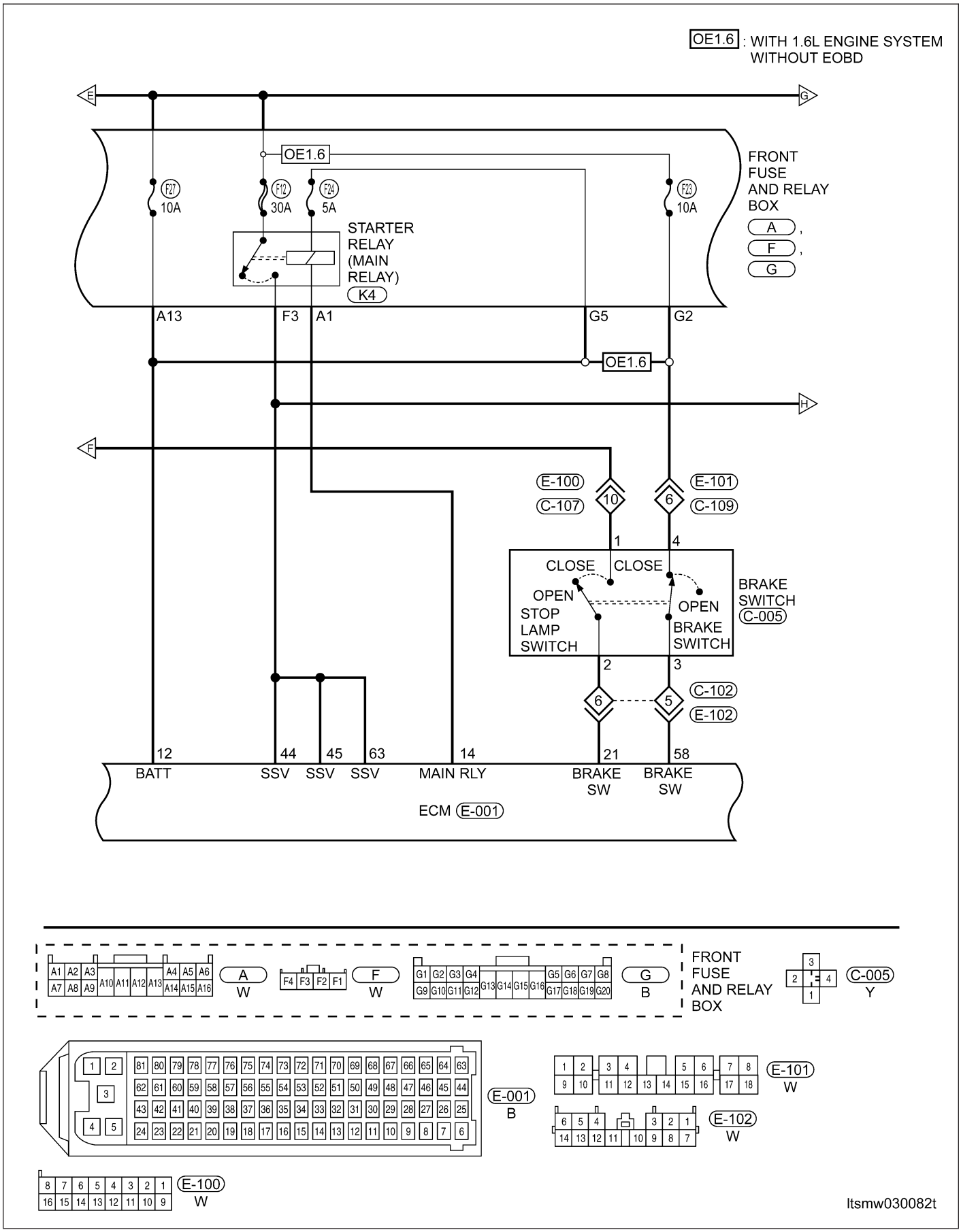

Downloaded from www.Manualslib.com manuals search engine

Electronic Engine Controls (Page 4 of 11)

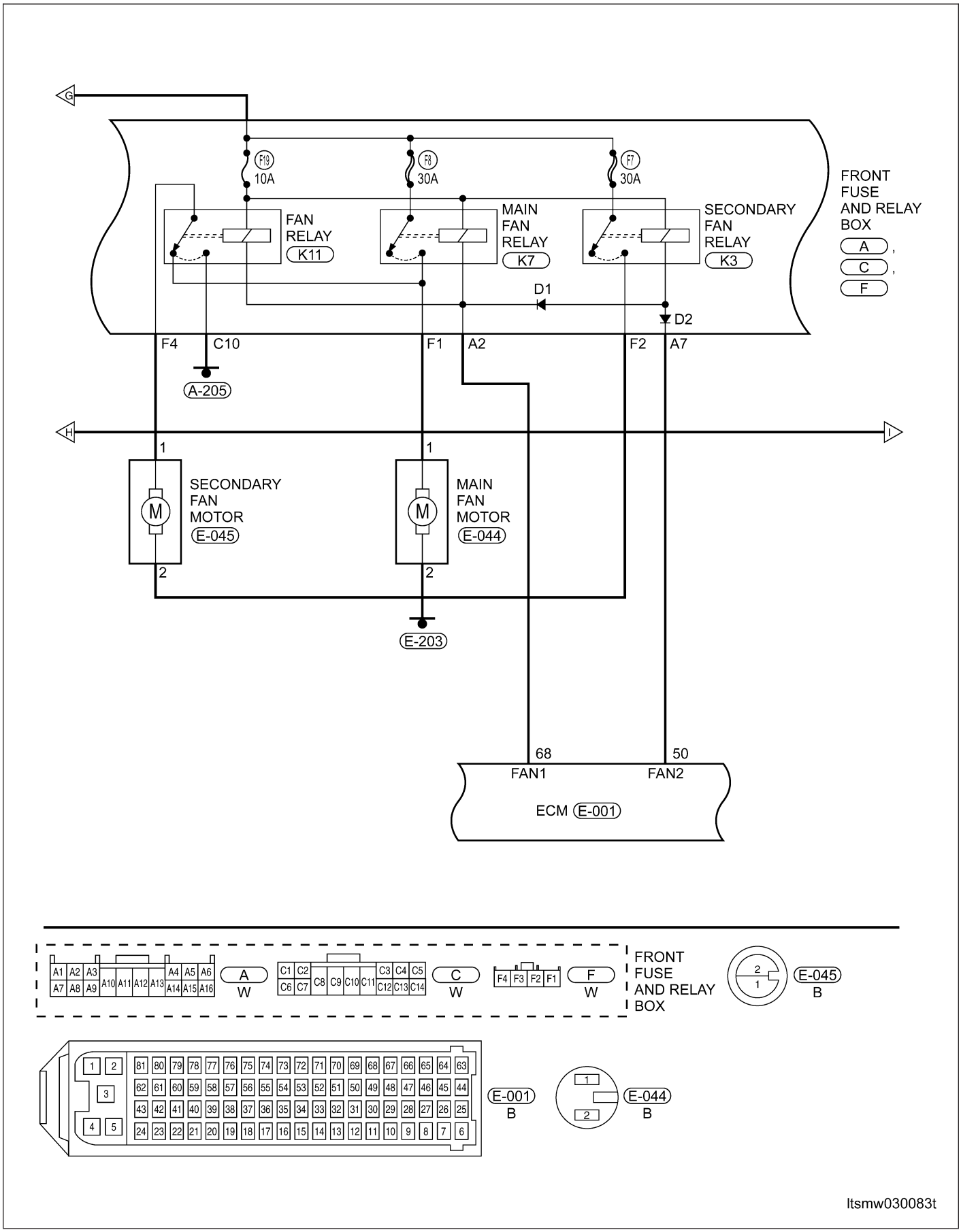

Downloaded from www.Manualslib.com manuals search engine

Electronic Engine Controls (Page 5 of 11)

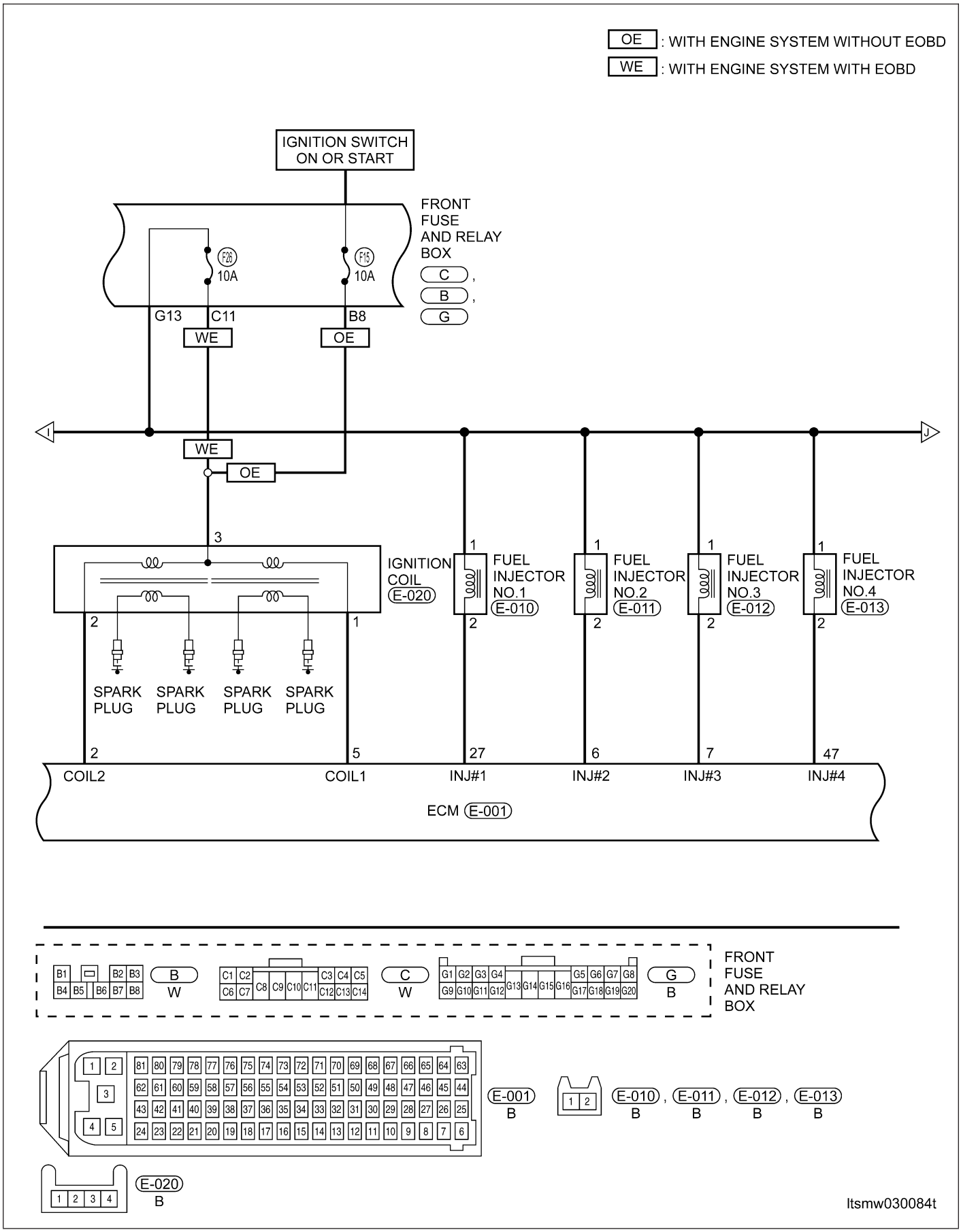

Downloaded from www.Manualslib.com manuals search engine

Electronic Engine Controls (Page 6 of 11)

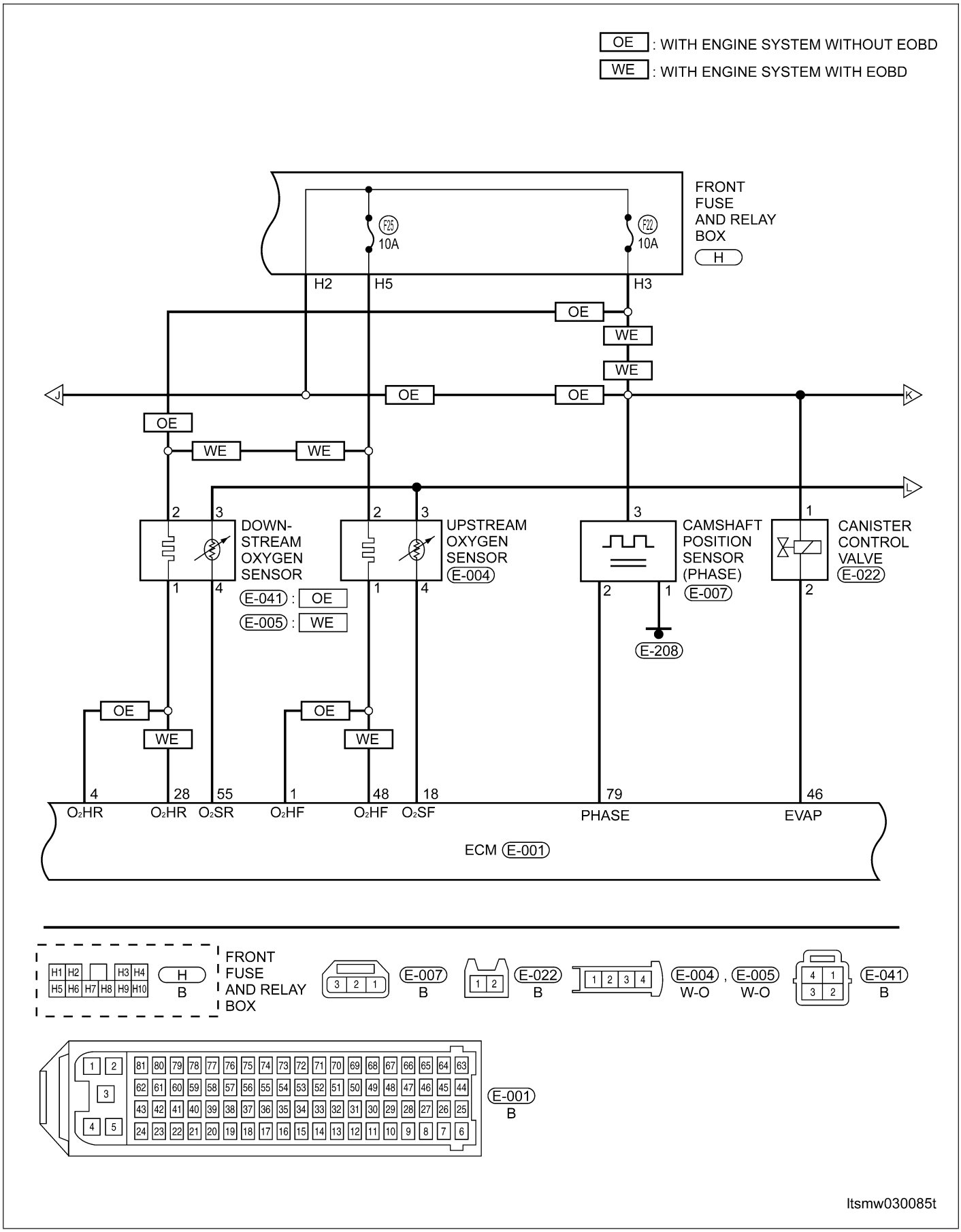

Downloaded from www.Manualslib.com manuals search engine

Electronic Engine Controls (Page 7 of 11)

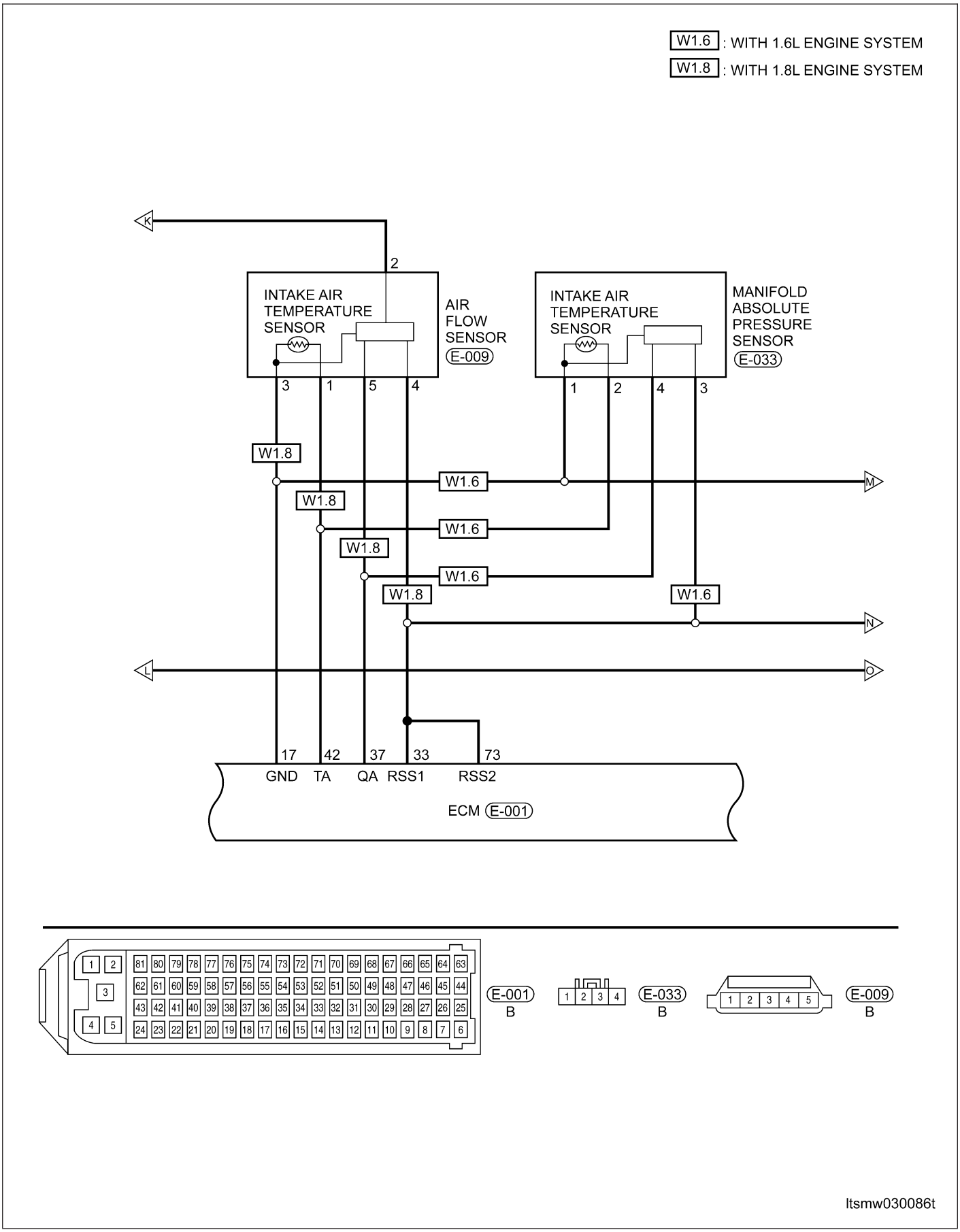

ltsmw030086t

Downloaded from www.Manualslib.com manuals search engine

Electronic Engine Controls (Page 8 of 11)

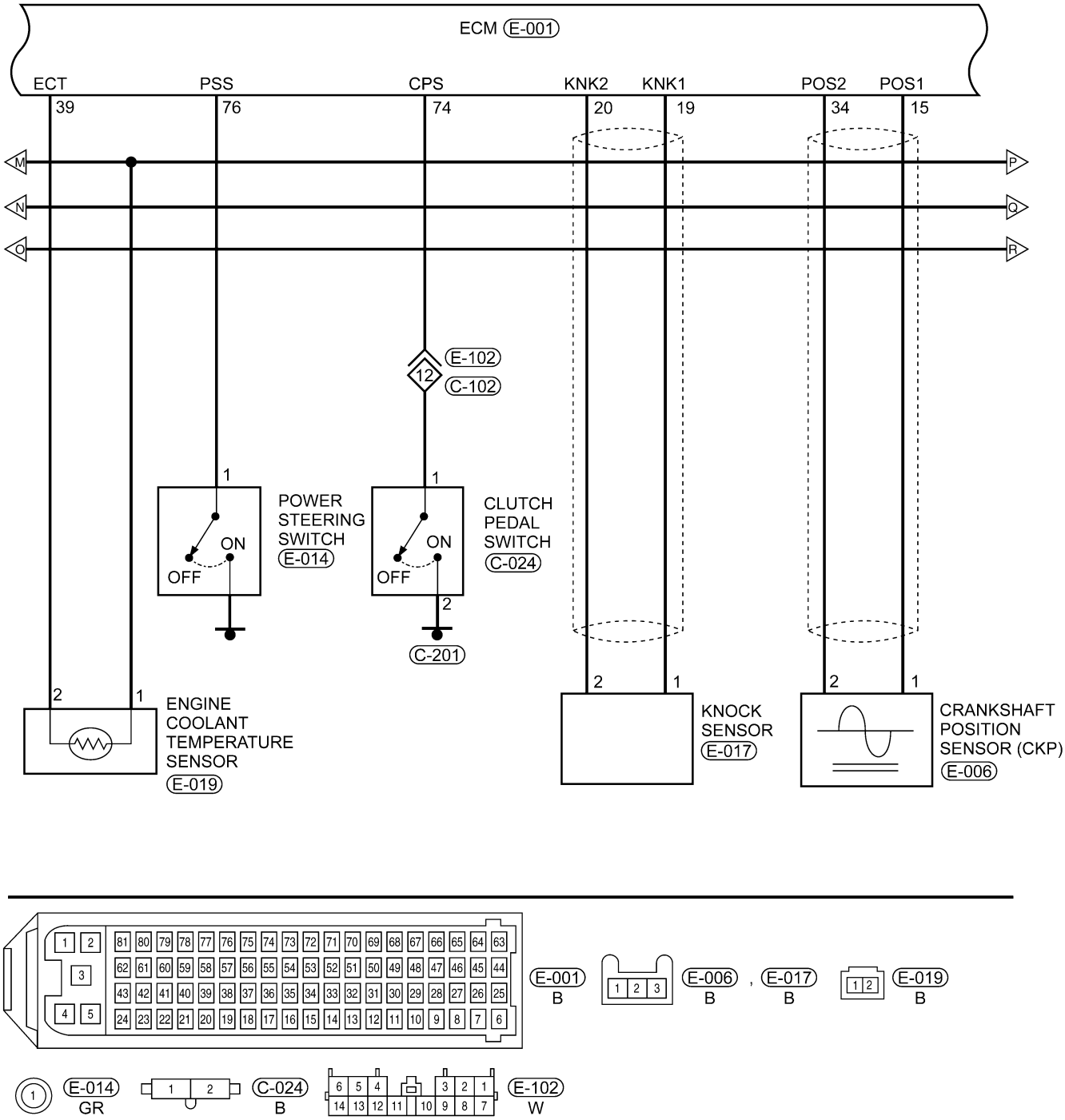

ltsmw030087t

Downloaded from www.Manualslib.com manuals search engine

Electronic Engine Controls (Page 9 of 11)

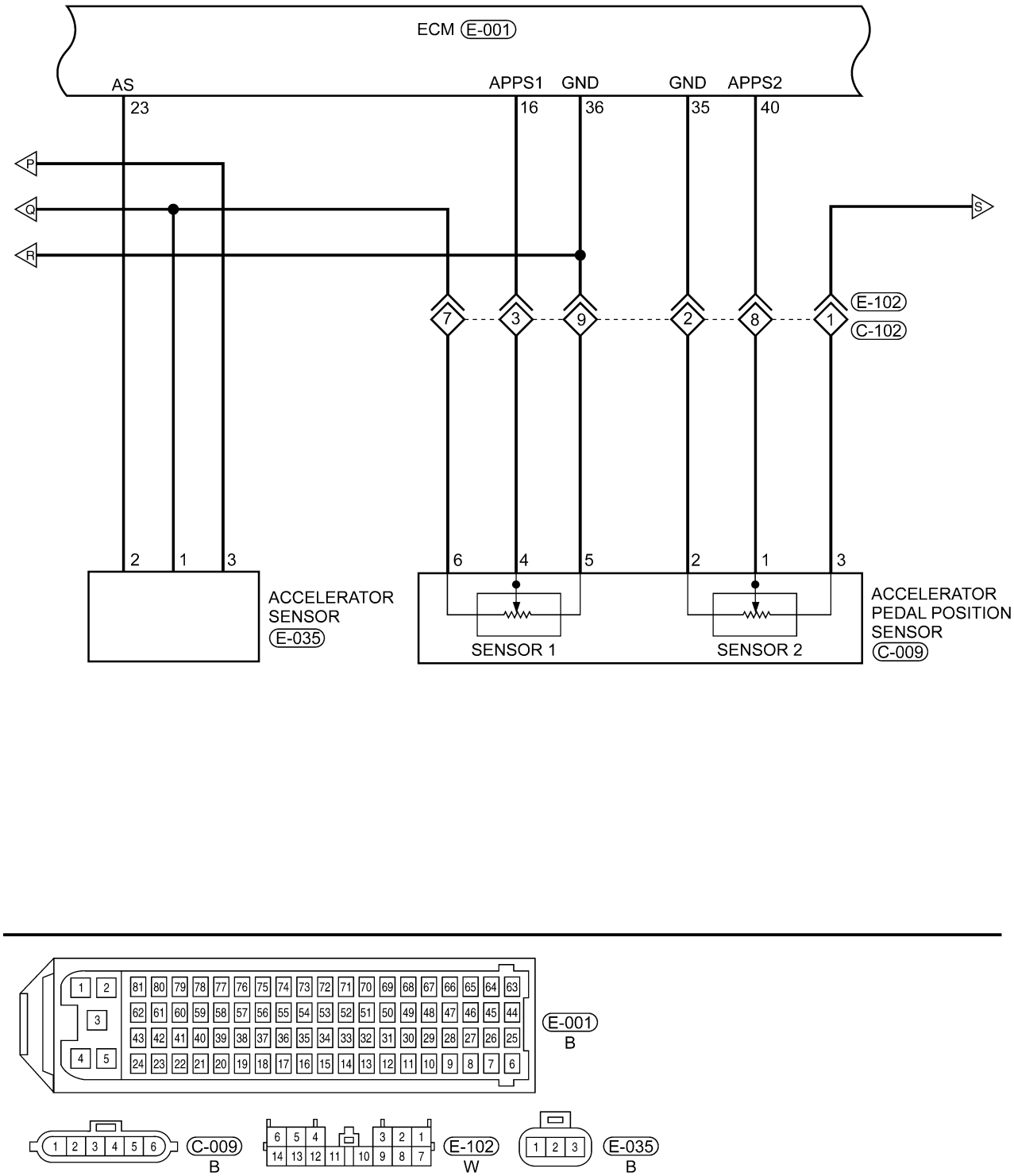

Downloaded from www.Manualslib.com manuals search engine

Electronic Engine Controls (Page 10 of 11)

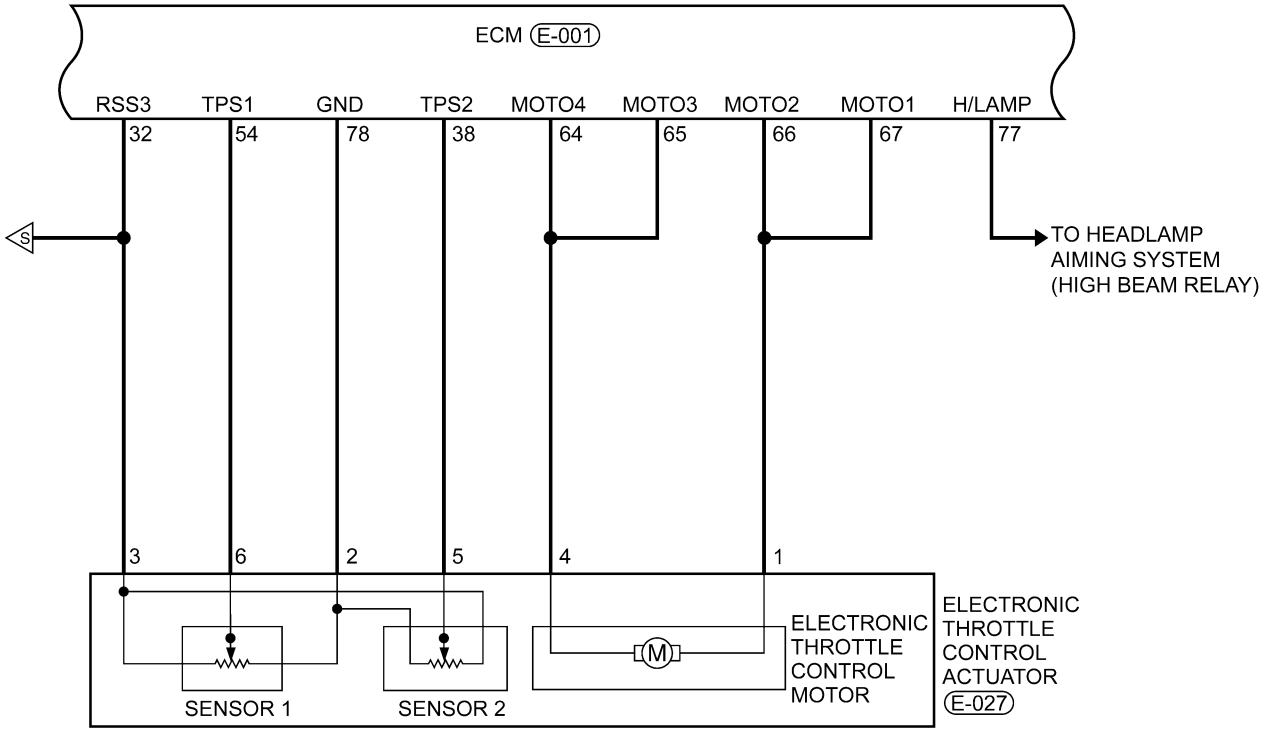

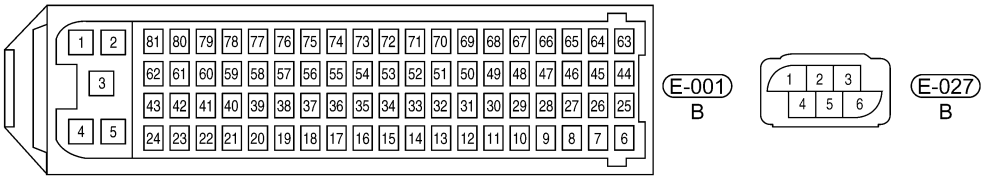

ltsmw030089t

Downloaded from www.Manualslib.com manuals search engine

Electronic Engine Controls (Page 11 of 11)

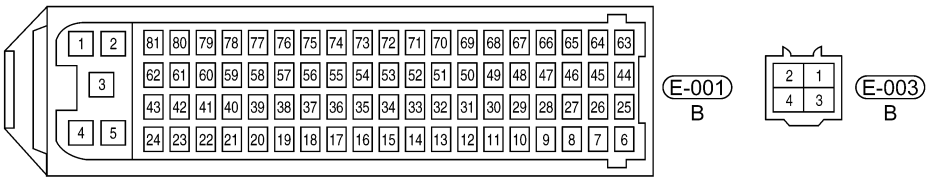

ltsmw030090t

Downloaded from www.Manualslib.com manuals search engine

ECM Connector Pin-Out Table

ECM PIN-OUT TABLE

PIN	CIRCUIT IDENTIFICATION	PIN	CIRCUIT IDENTIFICATION
1	(With EOBD) Upstream Oxygen Sensor Heater (Without EOBD)	42	Intake Air Temperature Sensor
2	Ignition Coil 2	43	-
3	GND (Ignition)	44	Switched Supply Voltage
4	(With EOBD) Downstream Oxygen Sensor Heater (Without EOBD)	45	Switched Supply Voltage
5	Ignition Coil 1	46	Canister Control Valve
6	Injector 2	47	Injector 4
7	Injector 3	48	Upstream Oxygen Sensor Heater (With EOBD) (Without EOBD)
8	Engine Speed Output	49	-
9	Coolant Temperature Output	50	Fan Relay Control
10	Fuel Consumption Output	51	GND (Signal)
11	EPC Lamp	52	-
12	Continuous Supply Voltage	53	GND (Signal)
13	Ignition Switch	54	Electronic Throttle Control Actuator
14	EMS Relay (Main Relay)	55	Downstream Oxygen Sensor
15	Crankshaft Position Sensor	56	-
16	Accelerator Position Sensor	57	-
17	Sensor (GND)	58	Brake Switch
18	Upstream Oxygen Sensor	59	Vehicle Speed Sensor
19	Knock Sensor 1	60	A/C Middle Pressure Switch
20	Knock Sensor 2	61	GND (Power)
21	Brake Switch	62	-
22	-	63	Switched Supply Voltage
23	Accelerator Sensor	64	Electronic Throttle Control Actuator
24	-	65	Electronic Throttle Control Actuator
25	-	66	Electronic Throttle Control Actuator
26	-	67	Electronic Throttle Control Actuator
27	Injector 1	68	Fan Relay Control 2
28	Downstream Oxygen Sensor Heater (With EOBD) (Without EOBD)	69	Air Compressor Relay
29	-	70	Fuel Pump Relay
30	-	71	Diagnostic Link K
31	MIL Lamp	72	-
32	Regulated Sensor Supply 3	73	Regulated Sensor Supply 2
33	Regulated Sensor Supply 1	74	Clutch Pedal Switch
34	Crankshaft Position Sensor	75	A/C Stand By

Downloaded from www.Manualslib.com manuals search engine

PIN	CIRCUIT IDENTIFICATION	PIN	CIRCUIT IDENTIFICATION
35	Sensor (GND)	76	Power Steering Switch
36	Sensor (GND)	77	Headlamp Switch
37	Manifold Absolute Pressure Sensor (With 1.6L Engine)	78	Sensor (GND)
	Air Flow Sensor (With 1.8L Engine)		
38	Electronic Throttle Control Actuator (Position Sensor)	79	Camshaft Position Sensor
39	Engine Coolant Temperature Sensor	80	GND (Power)
40	Accelerator Pedal Position Sensor	81	-
41	-		

Downloaded from www.Manualslib.com manuals search engine

DIAGNOSIS & TESTING

Diagnostic Help

1. The X-431 scan tool connects to the Data Link Connector (DLC) and communicates with the vehicle electronic modules through the data network.
2. Confirm that the malfunction is current and carry-out the diagnostic tests and repair procedures.
3. If the Diagnostic Trouble Code (DTC) cannot be deleted, it is a current fault.
4. Use only a digital multimeter to perform voltage readings on electronic systems.
5. Refer to any Technical Bulletins that may apply to the failure.
6. Visually inspect the related wiring harness.
7. Inspect and clean all Engine Control Module (ECM) grounds that are related to the most current DTC.
8. If numerous trouble codes were set, use a wiring schematic and look for any common ground circuits or voltage supply circuits that may apply to the DTC.

Intermittent DTC Troubleshooting

If the failure is intermittent perform the following:

- Check for loose connectors.
- Look for any chafed, pierced, pinched, or partially broken wires.
- Monitor the scan tool data relative to this circuit.
- Wiggle the related wiring harness and connectors while looking for an interrupted signal on the affected circuit.
- If possible, try to duplicate the conditions under which the DTC set.
- Look for the data to change or for the DTC to reset during the wiggle test.
- Look for broken, bent, pushed out or corroded terminals.
- Inspect the sensor and mounting area for any condition that would result in an incorrect signal, such as damage, or foreign material.
- A data recorder, and/or oscilloscope should be used to help diagnose intermittent conditions.
- Remove the Engine Control Module (ECM) from the troubled vehicle and install in a new vehicle and test. If the DTC cannot be deleted, the ECM is malfunctioning. If the DTC can be deleted, return the ECM to the original vehicle.

Ground Inspection

Ground connections are very important to the proper operation of electrical and electronic circuits. Ground connections are often exposed to moisture, dirt and other corrosive elements. The corrosion (rust) can become an unwanted resistance. This added resistance can alter the way a circuit works.

Electronically controlled circuits are very sensitive to proper grounding. A loose or corroded ground can drastically affect an electronically controlled circuit. A poor or corroded ground can effect the circuit. Perform the following when inspecting a ground connection:

1. Remove the ground bolt or screw.
2. Inspect all mating surface for tarnish, dirt, rust, etc.
3. Clean as required to assure good contact.
4. Reinstall bolt or screw securely.
5. Inspect for ″add-on″ accessories which may be interfering with the ground circuit.
6. If several wires are crimped into one ground eyelet terminal, check for proper crimps. Make sure all of the wires are clean, securely fastened and providing a good ground path. If multiple wires are crimped to one eyelet, make sure no excess wire insulation has been crimped creating a bad ground.

Downloaded from www.Manualslib.com manuals search engine

Electronic Throttle Control Actuator Self-Learning Operation Introduction

EPC Lamp Control Strategy

The Electronic Pedal Control (EPC) lamp will be on for a few seconds and turn off after the ignition switch is turned on and the engine is not running. After the engine started, the EPC lamp will go off if the DTC is not existent in ECM. If the internal self-check failed, the EPC lamp will continue to light.

Electronic Throttle Control Actuator Self-Learning Condition

- Engine stopped and the ignition switch on.
- Vehicle speed is 0 km/h.
- The Engine Coolant Temperature (ECT) is between 5.25°C and 100.5°C.
- The intake air temperature is more than 5.25°C.
- The accelerator pedal fully released.
- Battery voltage is more than 12 V.

Electronic Throttle Control Actuator Self-Learning Operating Procedure

Turn the ignition switch on for 10 seconds, then turn the ignition switch off. During the procedure, do not operate any other components.

Self-Learning Components

Perform the self-learning process when the following repairs have been made:

- Replaced the ECM
- ECM which was disconnected and reconnected
- Replaced the Accelerator Pedal
- Replaced the Electronic Throttle Control Actuator

Self-Learning Operating Procedure

Turn the ignition switch on for 10 seconds, then turn the ignition switch off. During the procedure, do not operate any other components.

Self-Learning Condition

The self-learning condition as the ″Electronic Throttle Control Actuator Self-Learning Condition″.

CAUTION:

Ensure that the Electronic Throttle Control Actuator self-learning process lasts for at least 10 seconds according to the Electronic Throttle Control Actuator self-learning condition. If the self-learning process fails, the engine can't be started or the EPC lamp will be on. If this condition occurs, perform the Self-Learning operating again after the DTCs be erased in ECM.

Diagnostic Trouble Code (DTC) List

DTC	DTC DEFINITION
P000A	″A″ Camshaft Position Slow Response
P000B	″B″ Camshaft Position Slow Response
P0010	″A″ Camshaft Position Actuator Circuit/Open
P0011	″A″ Camshaft Position - Timing Over - Advanced or System Performance
P0012	″A″ Camshaft Position - Timing Over - Retarded
P0013	″B″ Camshaft Position - Actual Circuit/Open
P0014	″B″ Camshaft Position - Timing Over - Advanced or System Performance
P0015	″B″ Camshaft Position - Timing Over - Retarded
P0016	Crankshaft - Camshaft Position Correlation
P0030	O_2 Sensor Heater Control Circuit (Bank 1 Sensor 1)
P0031	O_2 Sensor Heater Control Circuit (Bank 1 Sensor 1) Low

Downloaded from www.Manualslib.com manuals search engine

DTC	DTC DEFINITION
P0032	O_2 Sensor Heater Control Circuit (Bank 1 Sensor 1) High
P0036	O_2 Sensor Heater Control Circuit (Bank 1 Sensor 2)
P0037	O_2 Sensor Heater Control Circuit (Bank 1 Sensor 2) Low
P0038	O_2 Sensor Heater Control Circuit (Bank 1 Sensor 2) High
P0053	O_2 Sensor Heater Resistance (Bank 1 Sensor 1)
P0054	O_2 Sensor Heater Resistance (Bank 1 Sensor 2)
P0101	Mass or Volume Air Flow Circuit Range/Performance (1.8L)
P0102	Mass or Volume Air Flow Circuit Low Input (1.8L)
P0103	Mass or Volume Air Flow Circuit High Input (1.8L)
P0105	Manifold Absolute Pressure or Barometric Pressure Circuit (1.6L)
P0106	Manifold Absolute Pressure or Barometric Pressure Range/Performance (1.6L)
P0107	Manifold Absolute Pressure or Barometric Pressure Low Input (1.6L)
P0108	Manifold Absolute Pressure or Barometric Pressure High Input (1.6L)
P0112	Intake Air Temperature Circuit Low Input
P0113	Intake Air Temperature Circuit High Input
P0116	Engine Coolant Temperature Circuit Range/Performance
P0117	Engine Coolant Temperature Circuit Low Input
P0118	Engine Coolant Temperature Circuit High Input
P0121	Throttle/Pedal Position Sensor A Circuit Range/Performance
P0122	Throttle/Pedal Position Sensor A Circuit Low Input
P0123	Throttle/Pedal Position Sensor A Circuit High Input
P0130	O_2 Sensor Circuit Bank 1 - Sensor 1 Malfunction
P0131	O_2 Sensor Circuit Bank 1 - Sensor 1 Low Voltage
P0132	O_2 Sensor Circuit Bank 1 - Sensor 1 High Voltage
P0133	O_2 Sensor Circuit Bank 1 - Sensor 1 Slow Response
P0134	O_2 Sensor Circuit Bank 1 - Sensor 1 No Activity Detected
P0136	O_2 Sensor Circuit Bank 1 - Sensor 2 Malfunction
P0137	O_2 Sensor Circuit Bank 1 - Sensor 2 Low Voltage
P0138	O_2 Sensor Circuit Bank 1 - Sensor 2 High Voltage
P0140	O_2 Sensor Circuit Bank 1 - Sensor 2 No Activity Detected
P0170	Fuel Trim, Bank 1 Malfunction
P0171	Fuel Trim, Bank 1 System too Lean
P0172	Fuel Trim, Bank 1 too Rich
P0201	Cylinder 1 - Injector Circuit
P0202	Cylinder 2 - Injector Circuit
P0203	Cylinder 3 - Injector Circuit
P0204	Cylinder 4 - Injector Circuit
P0219	Engine Overspeed Condition
P0221	Throttle/Pedal Position Sensor/Switch B Range/Performance
P0222	Throttle/Pedal Position Sensor/Switch B Low Input
P0223	Throttle/Pedal Position Sensor/Switch B High Input
P0261	Cylinder 1 - Injector Circuit Low
P0262	Cylinder 1 - Injector Circuit High

Downloaded from www.Manualslib.com manuals search engine

DTC	DTC DEFINITION
P0264	Cylinder 2 - Injector Circuit Low
P0265	Cylinder 2 - Injector Circuit High
P0267	Cylinder 3 - Injector Circuit Low
P0268	Cylinder 3 - Injector Circuit High
P0270	Cylinder 4 - Injector Circuit Low
P0271	Cylinder 4 - Injector Circuit High
P0300	Random/Multiple Cylinder Misfire Detected
P0301	Cylinder 1 Misfire Detected
P0302	Cylinder 2 Misfire Detected
P0303	Cylinder 3 Misfire Detected
P0304	Cylinder 4 Misfire Detected
P0318	Rough Road Sensor ″A″ Signal Circuit
P0321	Ignition/Distributor Engine Speed Input Circuit Range/Performance
P0322	Ignition/Distributor Engine Speed Input Circuit No Signal
P0324	Knock Control System Error
P0327	Knock Sensor 1 Circuit Low Input
P0328	Knock Sensor 1 Circuit High Input
P0340	Camshaft Position Sensor Circuit
P0341	Camshaft Position Sensor Circuit Range/Performance
P0342	Camshaft Position Sensor Circuit Low Input
P0343	Camshaft Position Sensor Circuit High Input
P0444	Evaporative Emission System Purge Control Valve Circuit Open
P0458	Evaporative Emission System Purge Control Valve Circuit Low
P0459	Evaporative Emission System Purge Control Valve Circuit High
P0480	Cooling Fan 1 Control Circuit
P0481	Cooling Fan 2 Control Circuit
P0501	Vehicle Speed Sensor Range/Performance
P0506	Idle Control System RPM Lower than Expected
P0507	Idle Control System RPM High than Expected
P0508	Idle Air Control System Circuit Low
P0509	Idle Air Control System Circuit High
P0511	Idle Air Control Circuit
P0532	A/C Refrigerant Pressure Sensor Circuit Low Input
P0533	A/C Refrigerant Pressure Sensor Circuit High Input
P0537	A/C Evaporator Temperature Sensor Circuit Low
P0538	A/C Evaporator Temperature Sensor Circuit High
P0560	System Voltage Malfunction
P0562	System Voltage Low Voltage
P0563	System Voltage High Voltage
P0571	Brake Switch ″A″ Circuit
P0601	Internal Control Module EEPROM Error
P0602	Control Module Programming Error
P0604	Internal Control Module Random Access Memory (RAM) Error

Downloaded from www.Manualslib.com manuals search engine

DTC	DTC DEFINITION
P0605	Internal Control Module ROM Test Error
P0606	ECM Processor
P0627	Fuel Pump ″A″ Control Circuit/Open
P0628	Fuel Pump ″A″ Control Circuit Low
P0629	Fuel Pump ″A″ Control Circuit High
P0645	A/C Clutch Relay Circuit
P0646	A/C Clutch Relay Control Circuit Low
P0647	A/C Clutch Relay Control Circuit High
P0650	Malfunction Indicator Lamp Control Circuit
P0688	EMC/ECM Power Relay Sense Circuit Open
P0691	Cooling Fan 1 Control Circuit Low
P0692	Cooling Fan 1 Control Circuit High
P0693	Cooling Fan 2 Control Circuit Low
P0694	Cooling Fan 2 Control Circuit High
P0700	Transmission Control System Malfunction
P0704	Clutch Switch Input Circuit
P1297	Manufacturer Controlled Computer And Auxiliary Outputs
P1336	Engine Torque Control Adaptation at Limit
P1545	Throttle Position Control Malfunction
P1558	Throttle Actuator Electrical Malfunction
P1559	Idle Speed Control Throttle Position Adaptation Malfunction
P1564	Idle Speed Control Throttle Position Low Voltage During Adaptation
P1565	Idle Speed Control Throttle Position Lower Limit not Attained
P1568	Idle Speed Control Throttle Position Mechanical Malfunction
P1579	Idle Speed Control Throttle Position Adaptation Not Started
P1604	Internal Control Module Driver Error
P1610	Manufacture Controlled Computer and Auxiliary Outputs
P1611	Manufacture Controlled Computer and Auxiliary Outputs
P1612	Manufacture Controlled Computer and Auxiliary Outputs
P1613	Manufacture Controlled Computer and Auxiliary Outputs
P1614	Manufacture Controlled Computer and Auxiliary Outputs
P1651	Manufacture Controlled Computer and Auxiliary Outputs
P2106	Throttle Actuator Control System Forced Limited Power
P2122	Throttle/Pedal Position Sensor/Switch D Circuit Low Input
P2123	Throttle/Pedal Position Sensor/Switch D Circuit High Input
P2127	Throttle/Pedal Position Sensor/Switch E Circuit Low Input
P2128	Throttle/Pedal Position Sensor/Switch E Circuit High Input
P2138	Accelerator Pedal Position Sensor Signal Correlation Error
P2177	System Too Lean off Idle
P2178	System Too Rich off Idle
P2187	System Too Lean at Idle
P2188	System Too Rich at Idle
P2195	O_2 Sensor Signal Stuck Lean; Bank 1 Sensor 1

Downloaded from www.Manualslib.com manuals search engine

DTC	DTC DEFINITION
P2196	O_2 Sensor Signal Stuck Rich; Bank 1 Sensor 1
P2270	O_2 Sensor Signal Stuck Lean; Bank 1 Sensor 2
P2271	O_2 Sensor Signal Stuck Rich; Bank 1 Sensor 2
U0001	High Speed CAN Defective
U0101	Lost Communication with ECM
U104	Lost Communication with Cruise Control Module
U0121	Lost Communication with Anti-Lock Brake System (ABS) Control Module
U0155	Lost Communication with Instrument Panel Cluster Control Module
U0415	Invalid Data Received from ABS Control Module

Downloaded from www.Manualslib.com manuals search engine

ECM Power Supply and Ground Circuit Test

Power Supply and Ground Circuit

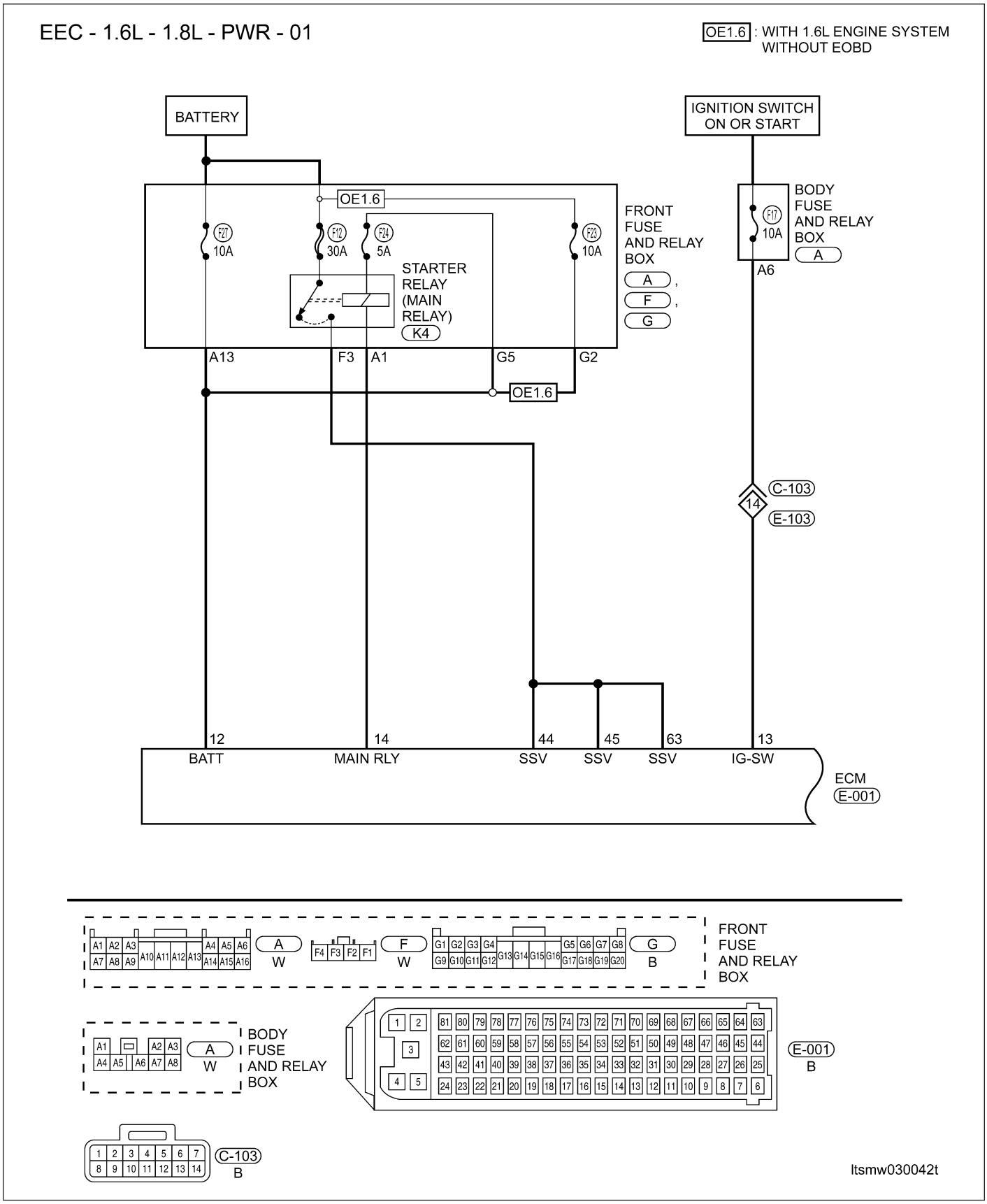

Downloaded from www.Manualslib.com manuals search engine

Check reference values between ECM terminals and ground under the following conditions:

ECM TERMINAL NO.	ITEM	CONDITION	DATA (DC VOLTAGE)
12	Continuous Supply Voltage	-	Voltage (11 - 14 V)
13	Ignition Switch	• Ignition switch: ON	Voltage (11 - 14 V)
		Ignition switch: OFF	Approximately 0 V
14	EMS Relay (Main Relay)	• Ignition switch: OFF More than a few seconds after turning ignition switch OFF	Voltage (11 - 14 V)
44	Switched Supply Voltage (SSV)	• Ignition switch: ON	Voltage (11 - 14 V)
45			
63			

Downloaded from www.Manualslib.com manuals search engine

EEC - 1.6L - 1.8L - PWR - 02

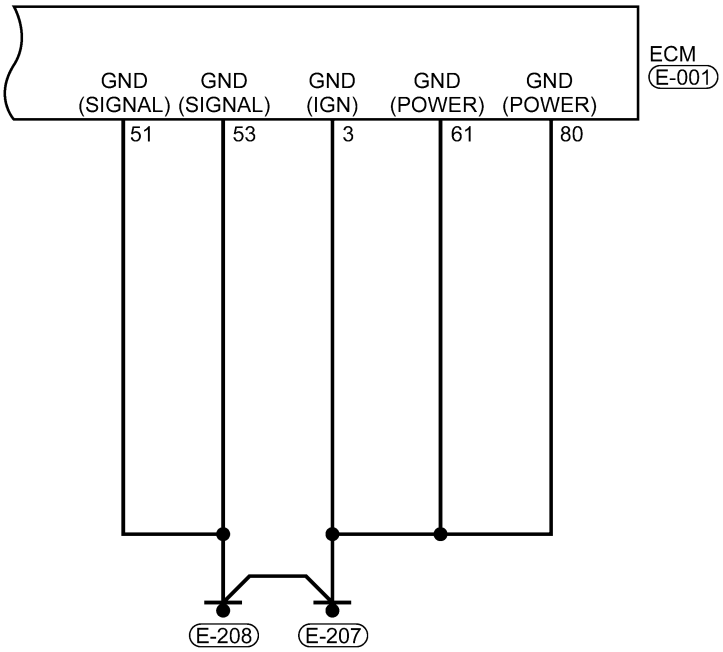

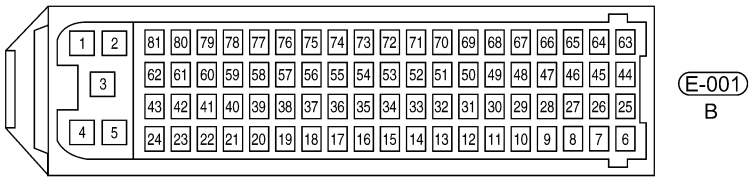

ltsmw030043t

Downloaded from www.Manualslib.com manuals search engine

Check reference values between ECM terminals and ground under the following conditions:

ECM TERMINAL NO.	ITEM	CONDITION	DATA (DC VOLTAGE)
3	GND (IGN)	Ignition switch: ON	Approximately 0 V
51	GND (Signal)	Ignition switch: ON	Approximately 0 V
53	GND (Signal)	Ignition switch: ON	Approximately 0 V
61	GND (Power)	Ignition switch: ON	Approximately 0 V
80	GND (Power)	Ignition switch: ON	Approximately 0 V

Confirmation Procedure:

Before performing the following procedure, confirm that battery voltage is more than 12 V.
- Turn ignition switch off.
- Connect the X-431 scan tool to the Data Link Connector (DLC) - use the most current software available.
- Start the engine and warm it to normal operating temperature.
- With the scan tool, select view data stream.
- If the data stream is not detected, the condition is current. Go to Diagnostic Procedure - Step 1.
- If the data stream is detected, the condition is intermittent (See Diagnostic Help and Intermittent DTC Troubleshooting in Section 03 Electronic Engine Controls for more information).

NOTE :
While performing electrical diagnosis & testing, always refer to the electrical schematics for specific circuit and component information.

Diagnostic Procedure

1. PRELIMINARY INSPECTION

- Attempt to start the engine.

Does the engine start?

Yes >> Go to step 7.

No >> Go to step 2.

2. CHECK ECM POWER SUPPLY CIRCUIT - (1)

- Turn ignition switch off and then on.
- Check voltage between the ECM terminal 13 and ground.
- Battery voltage should exist.

Is the check result normal?

Yes >> Go to step 4.

No >> Go to step 3.

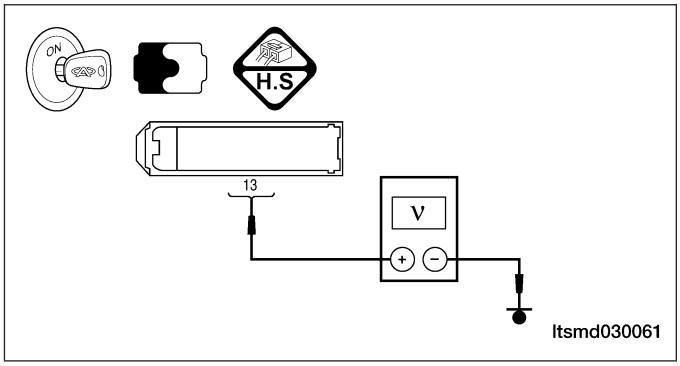

Downloaded from www.Manualslib.com manuals search engine

3. DETECT MALFUNCTIONING PART

- Check the following:
  - Fuse 17
  - Harness connectors C-103, E-103, terminal 14
  - Front fuse and relay box connector A
  - Harness for an open or short between ECM and fuse

Is the check result normal?

Yes >> Go to the next step.

No >> Repair or replace circuit for an open or short in harness or connectors.

4. CHECK GROUND CONNECTIONS

- Turn ignition switch off.
- Loosen and retighten ground screws on the body (See Ground Inspection in Section 03 Electronic Engine Controls).
- Inspect ground connections E-207 and E-208 mounting position (See Vehicle Wiring Harness Layout - Engine Room Harness (With 1.6L/1.8L Engine) in Section 16 Wiring).

Are the ground connections OK?

Yes >> Go to the next step.

No >> Repair or replace ground connections.

5. CHECK ECM GROUND CIRCUIT FOR AN OPEN OR SHORT

- Disconnect ECM harness connector.
- Check harness continuity between ECM terminals 3, 51, 53, 61, 80 and ground.
- Continuity should exist.
- Also check harness for short to power.

Is the check result normal?

Yes >> Go to step 7.

No >> Go to the next step.

6. DETECT MALFUNCTIONING PART

- Check harness for open or short between ECM terminals 3, 51, 53, 61, 80 and ground.

Is the check result normal?

Yes >> Go to the next step.

No >> Repair or replace circuit for an open or short to power in harness or connectors.

Downloaded from www.Manualslib.com manuals search engine

7. CHECK ECM POWER SUPPLY CIRCUIT - (2)

- Check voltage between ECM terminals 44, 45, 63 and ground.
- Voltage: Turn ignition switch on, battery voltage should exist and after turning ignition switch off, battery voltage will exist a few seconds, then drop to approximate 0 V.

Is the check result normal?

Yes >> Check the starting system.

No >> Go to the next step.

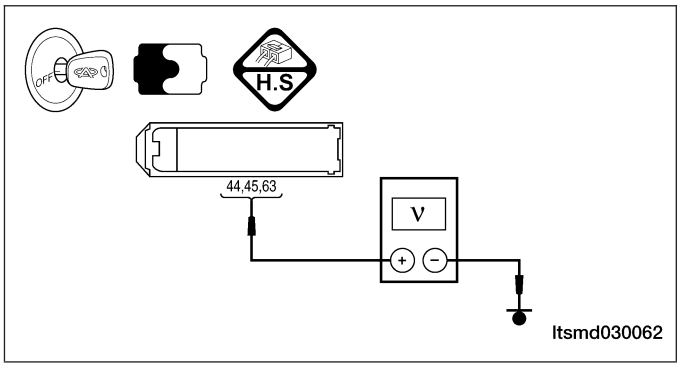

8. CHECK STARTER RELAY (K4) SUPPLY VOLTAGE

- Turn ignition switch off. Wait for at least 10 seconds.
- Check voltage between the ECM terminal 14 and ground.
- Battery voltage should exist.

Is the check result normal?

Yes >> Go to the next step.

No >> Go to step 10.

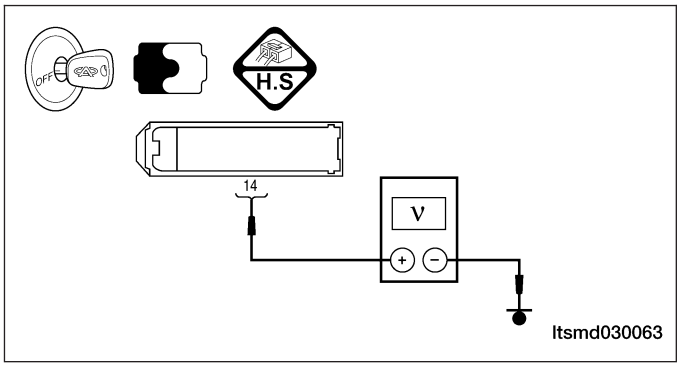

9. CHECK ECM POWER SUPPLY CIRCUIT - (3)

- Disconnect ECM harness connector.
- Disconnect ECM power supply circuit connector F in front fuse and relay box harness connector.
- Check harness continuity between ECM terminals 44, 45, 63 and front fuse and relay box terminal F3.
- Continuity should exist.
- Also check harness for a short to ground and short to power.

Is the check result normal?

Yes >> Go to step 11.

No >> Repair circuit for an open or short to power in harness or connectors.

Downloaded from www.Manualslib.com manuals search engine

10. CHECK STARTER RELAY (K4) CIRCUIT

- Disconnect ECM harness connector.
- Disconnect front fuse and relay box harness connector A.
- Check harness continuity between ECM terminal 14 and front fuse and relay box terminal A1.
- Check harness continuity between front fuse and relay box terminal G2 and A13.
- If not equipped with EOBD (1.6L): Check harness continuity between front fuse and relay box terminal G2 and G5.
- Continuity should exist.
- Also check harness for a short to ground and short to power.

Is the check result normal?

Yes >> Go to the next step.

No >> Repair circuit for an open or short to ground or short to power in harness or connectors.

11. CHECK FUSE

- Disconnect fuse 27 (10A), fuse 24 (5A) in the front fuse and relay box.
- If Without EOBD (1.6L): Disconnect fuse 23 (10A), fuse 24 (5A) front fuse and relay box.
- Check fuses.

Is the check result normal?

Yes >> Go to the next step.

No >> Replace fuse 23, fuse 24 or fuse 27.

12. CHECK FRONT FUSE AND RELAY BOX

- Check front fuse and relay box.

Is the check result normal?

Yes >> Replace the ECM.

NOTE : The Immobilizer control module must be matched to the new ECM (See ECM Removal & Installation in Section 03 Electronic Engine Controls).

No >> Replace front fuse and relay box.

Downloaded from www.Manualslib.com manuals search engine

Diagnostic Trouble Code (DTC) Tests

P0016 - Camshaft Position-Crankshaft Position Correlation Error

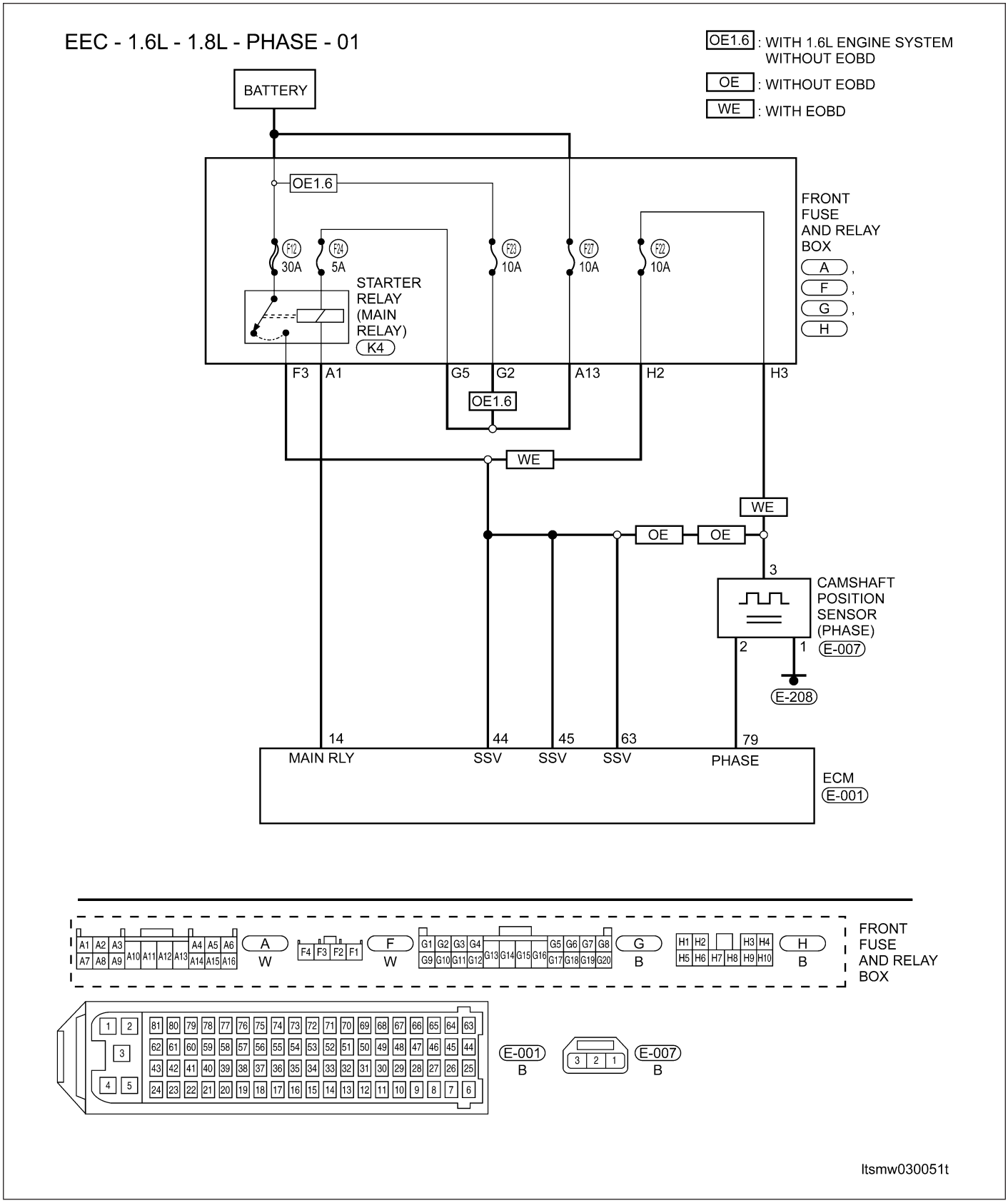

Downloaded from www.Manualslib.com manuals search engine

EEC - 1.6L - 1.8L - POS - 01

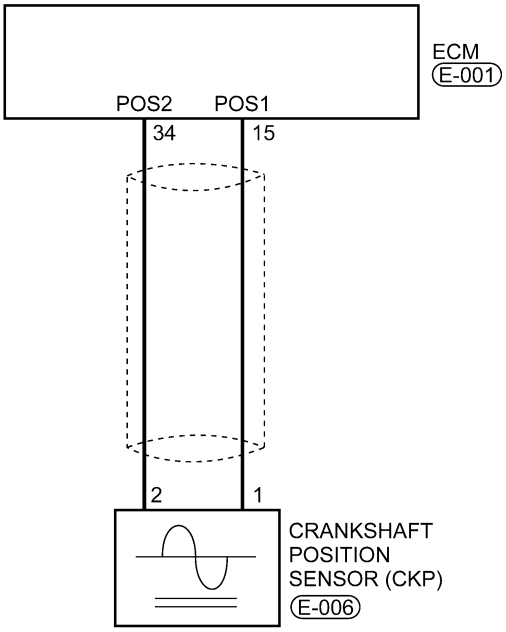

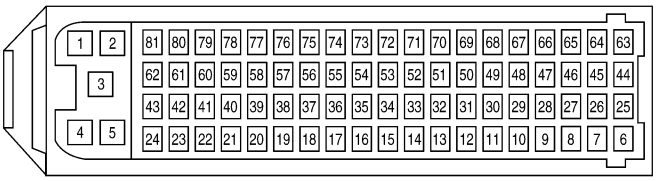

E-001
B

E-006
B

ltsmw030046t

Downloaded from www.Manualslib.com manuals search engine

Check reference values between ECM terminals and ground under the following conditions:

ECM TERMINAL NO.	ITEM	CONDITION	DATA (AVERAGE DC VOLTAGE)
15	Crankshaft Position (CKP) sensor	• Ignition switch: ON • Engine: Not cranking	3 V
34			
79	Camshaft Position (CMP) sensor	• Ignition switch: ON • Engine: Not cranking	11 V

On Board Diagnostic Logic

- Self-diagnosis detection logic.

DTC NO.	DTC DEFINITION	DTC DETECTION CONDITION	DTC SET CONDITION	POSSIBLE CAUSE
P0016	Camshaft position-Crankshaft position correlation error	Engine is running	ECM detected that the CMP sensor is out of phase with CKP sensor.	• CMP sensor • CKP sensor • Harness or connectors (The sensor circuit is open or shorted) • Crankshaft signal plate • Camshaft and camshaft signal plate • Timing misalignment • ECM

DTC Confirmation Procedure:

Before performing the following procedure, confirm that battery voltage is more than 12 V.

- Turn ignition switch off.
- Connect the X-431 scan tool to the Data Link Connector (DLC) - use the most current software available.
- Turn ignition switch on.
- With the scan tool, record and erase stored DTCs in the ECM.
- Start engine and warm it to normal operating temperature, then select view DTC and data stream.
- If the DTC is detected, the DTC condition is current. Go to Diagnostic Procedure - Step 1.
- If the DTC is not detected, the DTC condition is intermittent (See Diagnostic Help and Intermittent DTC Troubleshooting in Section 03 Electronic Engine Controls for more information.

NOTE :
While performing electrical diagnosis & testing, always refer to the electrical schematics for specific circuit and component information.

Downloaded from www.Manualslib.com manuals search engine

Diagnostic Procedure

1. CHECK GROUND CONNECTIONS

- Turn ignition switch off.
- Loosen and retighten ground screws on the body (See Ground Inspection in Section 03 Electronic Engine Controls).
- Inspect ground connections E-207 and E-208 mounting position (See Vehicle Wiring Harness Layout - Engine Room Harness (With 1.6L/1.8L Engine) in Section 16 Wiring).

Are the ground connections OK?

Yes >> Go to the next step.

No >> Repair or replace ground harness or connections.

2. CHECK CMP SENSOR ELECTRICAL CONNECTOR

- Disconnect the CMP sensor (1) electrical connector.
- Inspect the electrical connector for damage.

Is the electrical connector OK?

Yes >> Go to the next step.

No >> Repair or replace the electrical connector as necessary.

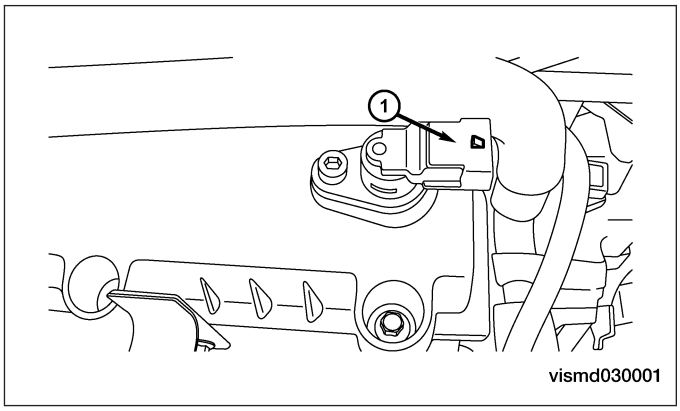

3. CHECK THE CMP SENSOR POWER SUPPLY CIRCUIT FOR AN OPEN OR SHORT

- Turn ignition switch on.
- Check CMP sensor supply voltage between sensor connector E-007, terminal 3 and ground in the sensor electrical connector.
- 12 V should exist.

Is the check result normal?

Yes >> Go to step 5.

No >> Go to the next step.

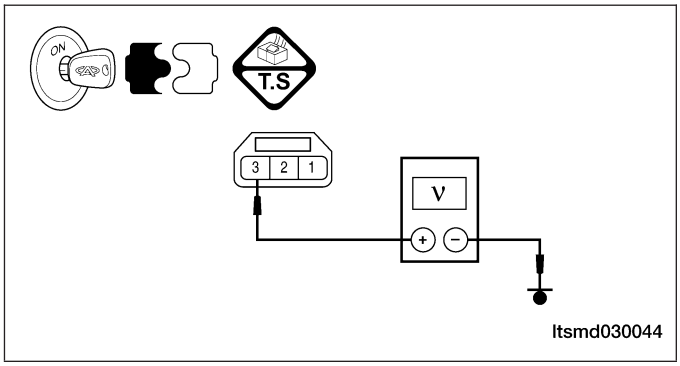

Downloaded from www.Manualslib.com manuals search engine

4. DETECT MALFUNCTIONING PART

- Check the following:

1.6L Without EOBD

  – Front fuse and relay box G2, G5, A1, F3
  – Fuse 23, fuse 12, fuse 24

Without EOBD

  – Front fuse and relay box A1, F3, G5, A13
  – Fuse 27, fuse 12, fuse 24

With EOBD

  – Front fuse and relay box H3, H2, ,G5, A1, F3, A13
  – Fuse 27, fuse 12, fuse 24, fuse 22

- Harness for an open or short between CMP sensor and fuse
- Check the relay or replace the relay if necessary.
- Repair circuit in harness or connectors.
- With the X-431 scan tool, read ECM DTCs.
- Refer to ″DTC Confirmation Procedure″.

Is DTC P0016 still present?

Yes >> Go to the next step.

No >> The system is operating properly at this time.

5. CHECK THE CMP SENSOR GROUND CIRCUIT FOR AN OPEN OR SHORT

- Turn ignition switch off.
- Check continuity between CMP sensor terminal 1 and ground.
- Continuity should exist.
- Also check harness for short to power.

Is the check result normal?

Yes >> Go to the next step.

No >> Repair or replace circuit for an open or short to power in harness or connectors.

6. CHECK THE CMP SENSOR INPUT SIGNAL CIRCUIT FOR AN OPEN OR SHORT

- Turn ignition switch on.
- Check voltage between CMP sensor terminal 2 and ground.
- 11 V should exist.

Is the check result normal?

Yes >> Go to the next step.

No >> Repair or replace circuit for an open or short to power or short to ground in harness or connectors. If circuit is normal, go to the next step.

Downloaded from www.Manualslib.com manuals search engine

7. CHECK CMP SENSOR SIGNAL

- Turn ignition switch off.
- Connect CMP sensor connector.
- Check signal between CMP sensor terminal 2 and ground when engine is running.
- Approximately 6 V square wave signal should exist.

	CMP SENSOR SIGNAL
ENGINE ANALYZER (KES-200)	vismd030003

Is the CMP output signal normal?

Yes >> Go to step 10.

No >> Go to the next step.

8. CHECK CMP SENSOR

- Remove the CMP sensor (1).
- Inspect and clean the CMP sensor and mounting area for any condition that would result in an incorrect signal, such as damage, foreign material, or excessive movement.

Is the sensor mounting area OK?

Yes >> Go to the next step.

No >> Repair or replace the sensor as necessary.

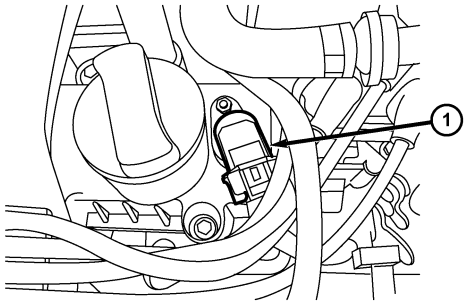

pzsmd030003

Downloaded from www.Manualslib.com manuals search engine

9. CHECK CMP SENSOR RESISTANCE

- Check resistance between the following CMP sensor terminals, component side:

TERMINAL NO.	RESISTANCE Ω (25°C)
1 & 2	Except 0 or ∞
1 & 3	
2 & 3	

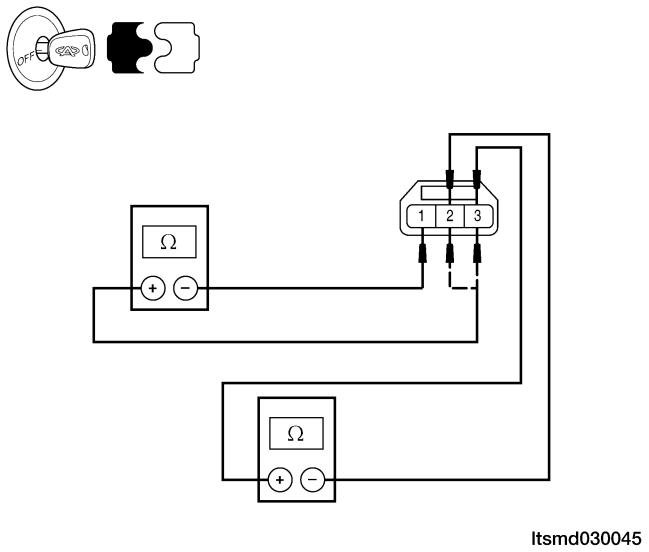

Is the check result normal?

Yes >> Replace the CMP sensor with a known good CMP sensor.
Monitor the CMP sensor signal on the KES-200 screen.
– If the CMP sensor signals were normal, the system is OK.
– If the CMP sensor signals were still irregular or missing, go to step 13.

No >> Replace CMP sensor.

Downloaded from www.Manualslib.com manuals search engine

10. CHECK CKP SENSOR SIGNAL WAVE PATTERN

- Check signal between CKP sensor (1) terminal 1 and ground, terminal 2 and ground when engine is running.

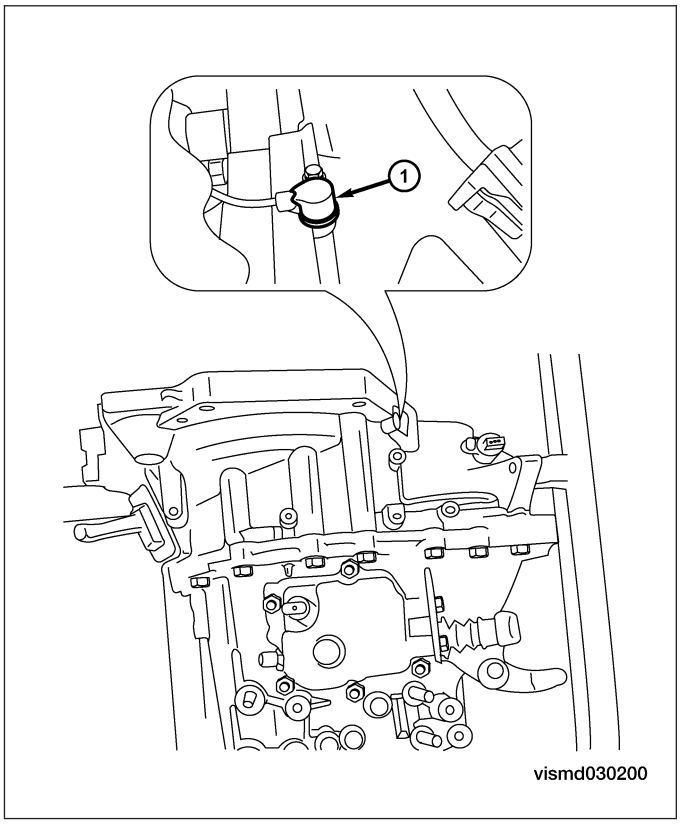

	CKP SENSOR SIGNAL
ENGINE ANALYZER (KES-200)	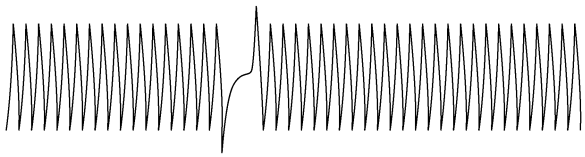 vismd030002

Is the CKP output signal normal?

Yes >> Go to step 16.

No >> Go to the next step.

Downloaded from www.Manualslib.com manuals search engine

11. CHECK CKP SENSOR

- Remove the CKP sensor (1).
- Inspect and clean the CKP sensor and mounting area for any condition that would result in an incorrect signal, such as damage, foreign material, or excessive movement.

Is the sensor mounting area OK?

Yes >> Go to the next step.

No >> Repair or replace the sensor as necessary.

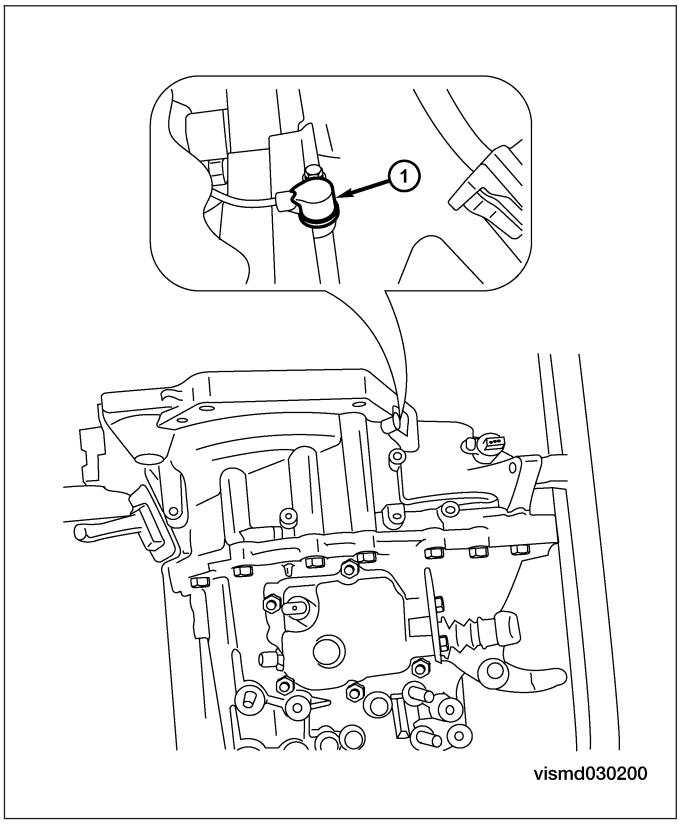

12. CHECK CKP SENSOR RESISTANCE

- Check the resistance of the CKP sensor, component side.

TERMINAL NO.	RESISTANCE Ω (25°C)	
1 & 2	Approximately 1000 Ω	

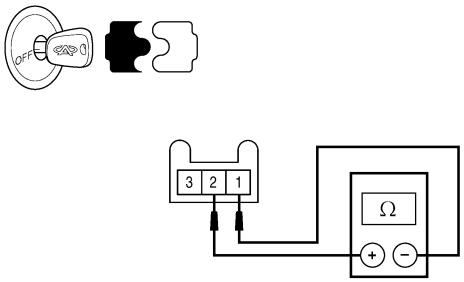

ltsmd030049

Is the check result normal?

Yes >> Replace the CKP sensor with a known good CKP sensor.
Monitor the CKP sensor signal on the KES-200 screen.
– If the CKP sensor signals were normal, the system is OK.
– If the CKP sensor signals were still irregular or missing, go to step 14.

No >> Replace CKP sensor.

Downloaded from www.Manualslib.com manuals search engine

13. CHECK THE CAMSHAFT AND CAMSHAFT SIGNAL PLATE

- Remove the cylinder head cover and timing belt cover (See Timing Belt Removal & Installation in Section 02 Engine).
- Check the installed clearance (See CMP Sensor Removal & Installation in Section 03 Electronic Engine Controls).
- 0.8 - 1.2 mm should exist.
- Check the camshaft and camshaft signal plate for any condition that would result in an incorrect signal, such as damage, become flexible, foreign material when rotate the camshaft.

Were any problems found?

Yes >> Remove debris and clean the signal plate of camshaft rear end or replace camshaft.
Reinstall CMP sensor.

No >> Go to step 16.

14. CHECK THE CRANKSHAFT AND CRANKSHAFT SIGNAL PLATE

- Check the installed clearance (See CKP Sensor Removal & Installation in Section 08 Transaxle & Transfer Case).
- 0.8 - 1.2 mm should exist.
- Check the crankshaft and crankshaft signal plate for any condition that would result in an incorrect signal, such as damage, become flexible, foreign material when rotate the crankshaft.

Were any problems found?

Yes >> Remove debris and clean the signal plate of crankshaft rear end or replace crankshaft.
Reinstall the CKP sensor.

No >> Go to the next step.

15. CHECK THE TIMING

- Check the timing for misalignment.

Is the timing misaligned?

Yes >> Align the engine timing belt (See Timing Belt Removal & Installation in Section 02 Engine).

No >> Go to the next step.

16. CHECK DTC

- With the X-431 scan tool, read ECM DTCs.
- Refer to ″DTC Confirmation Procedure″.

Is DTC P0016 still present?

Yes >> Replace the ECM.

NOTE : The Immobilizer control module must be matched to the new ECM (See ECM Removal & Installation in Section 03 Electronic Engine Controls).

No >> The system is now operating properly.
Reassemble the vehicle and road test to verify the customers complaint is repaired.

Downloaded from www.Manualslib.com manuals search engine

P0031 - O_2 Sensor 1 Heater Control Circuit Low

EEC - 1.6L - 1.8L - O_2S - 01 - WITH EOBD

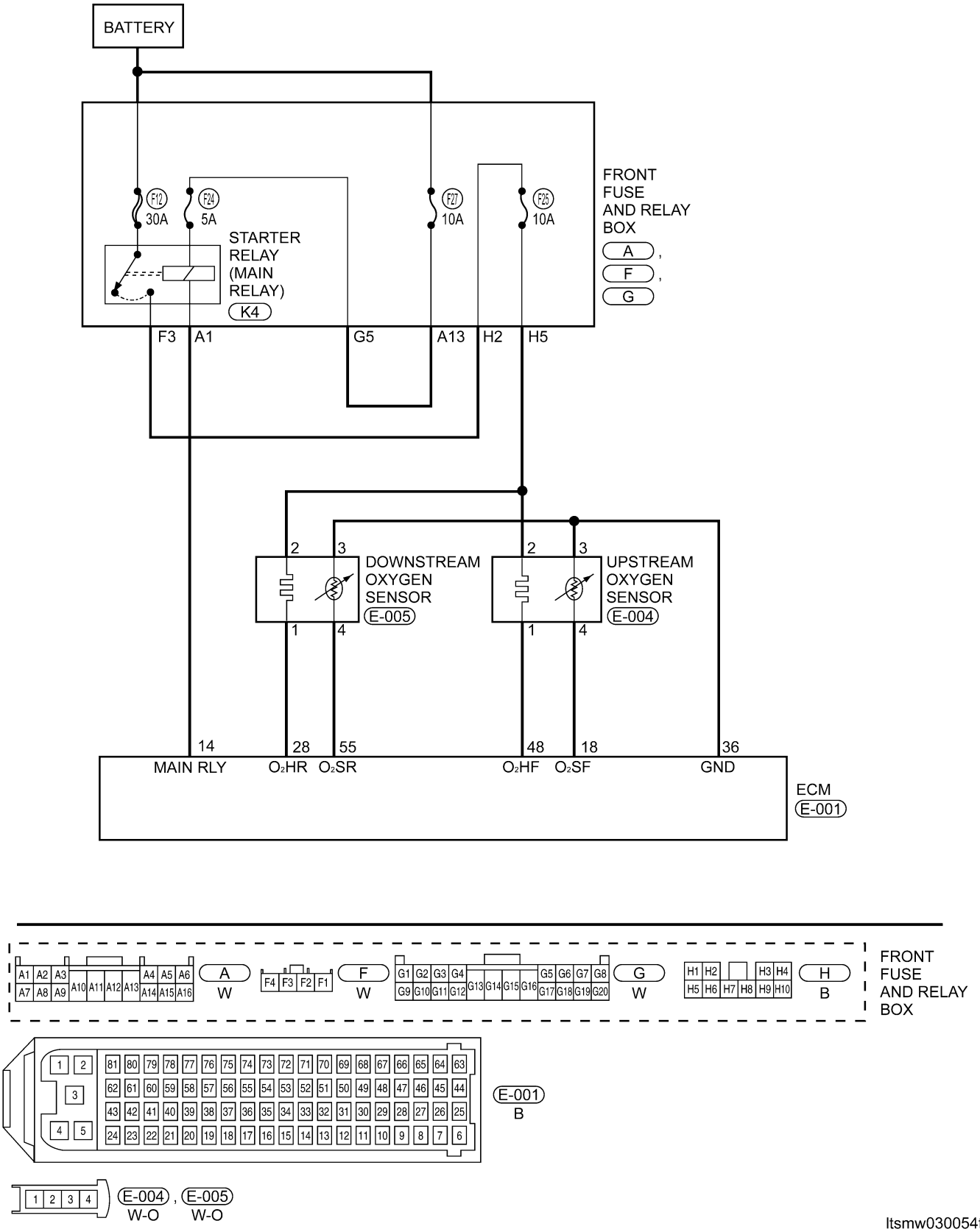

Downloaded from www.Manualslib.com manuals search engine

EEC - 1.6L - 1.8L - O_2S - 02 - WITHOUT EOBD

W1.6 : WITH 1.6L ENGINE SYSTEM
W1.8 : WITH 1.8L ENGINE SYSTEM

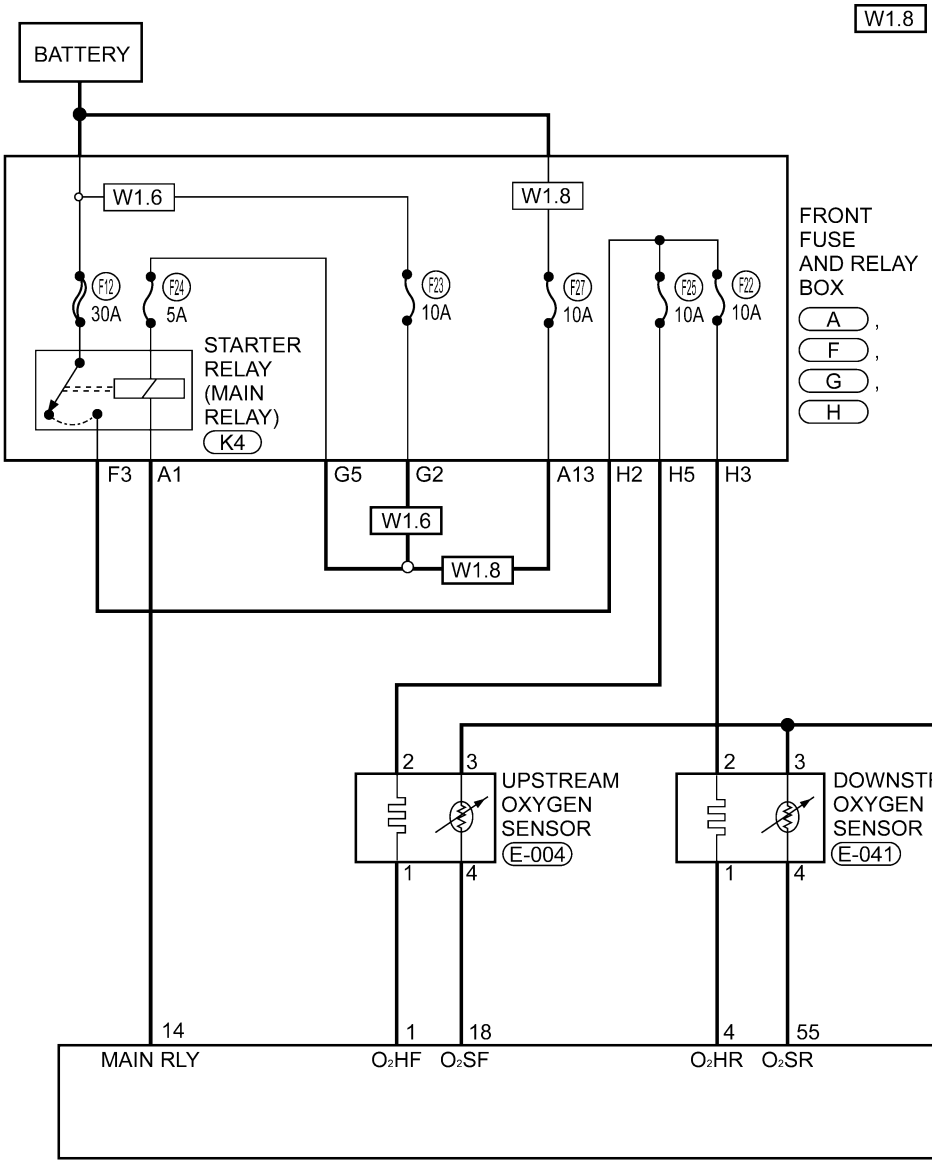

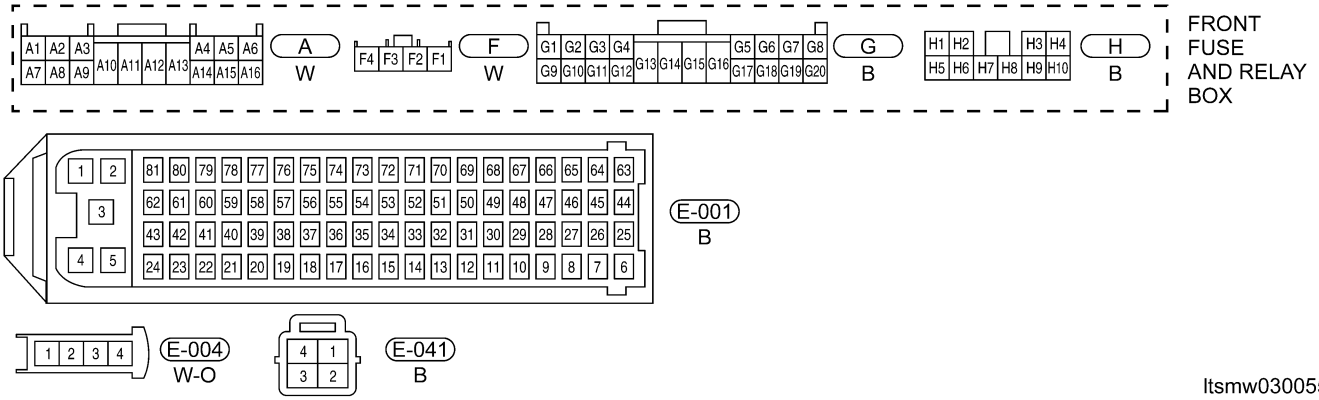

ltsmw030055t

Downloaded from www.Manualslib.com manuals search engine

Check reference values between ECM terminals and ground under the following conditions:

ECM TERMINAL NO.	ITEM	CONDITION	DATA (DC VOLTAGE)
18	Upstream oxygen sensor	• Engine is running • Warm-up condition • Keep the engine speed 2000 RPM	Approximately 0.1 V - 0.9 V (change 5 - 8 times in 10 seconds periodically)
28 (With EOBD) 4 (Without EOBD)	Downstream oxygen sensor heating	-	-
36	Sensor (GND)	• Warm-up condition • Idle speed	Approximately 0 V
48 (With EOBD) 1 (Without EOBD)	Upstream oxygen sensor heating	-	-
55	Downstream oxygen sensor	• Engine is running • Warm-up condition • Keep the engine speed 2000 RPM	Approximately 100 mV

On Board Diagnostic Logic

- Self-diagnosis detection logic.

DTC NO.	DTC DEFINITION	DTC DETECTION CONDITION	POSSIBLE CAUSE
P0031	O_2 sensor 1 heater control circuit low	Engine is running	• Oxygen sensor • Harness or connectors (The sensor circuit is open or shorted) • ECM

DTC Confirmation Procedure:

Before performing the following procedure, confirm that battery voltage is more than 12 V.

- Turn ignition switch off.
- Connect the X-431 scan tool to the Data Link Connector (DLC) - use the most current software available.
- Turn ignition switch on and select record and erase data stream and DTC.
- Start engine and warm it up to the normal operating temperature.
- Turn ignition switch off and wait at least 10 seconds.
- Start engine and keep the engine speed 2000 RPM for at least 1 minute.
- Let engine idle for 2 minutes.
- With the scan tool, select view DTCs in the ECM.
- If DTC is detected, go to Diagnostic Procedure - Step 1.
- If the DTC is not detected, the DTC condition is intermittent (See Diagnosis & Testing Diagnostic Help in Section 03 Electronic Engine Controls).

NOTE :
While performing electrical diagnosis & testing, always refer to the electrical schematics for specific circuit and component information.

Downloaded from www.Manualslib.com manuals search engine

Diagnostic Procedure

1. CHECK GROUND CONNECTIONS

- Turn ignition switch off.
- Loosen and retighten ground screws on the body (See Ground Inspection in Section 03 Electronic Engine Controls).
- Inspect ground connections E-207 and E-208 mounting position (See Vehicle Wiring Harness Layout - Engine Room Harness (With 1.6L/1.8L Engine) in Section 16 Wiring).

Is ground connections OK?

Yes >> Go to the next step.

No >> Repair or replace ground harness or connections.

2. CHECK O_2 SENSOR ELECTRICAL CONNECTOR

- Disconnect the O_2 sensor (1) electrical connector E-004.
- Inspect the electrical connector for damage.

Is the electrical connector OK?

Yes >> Go to the next step.

No >> Repair or replace the electrical connector as necessary.

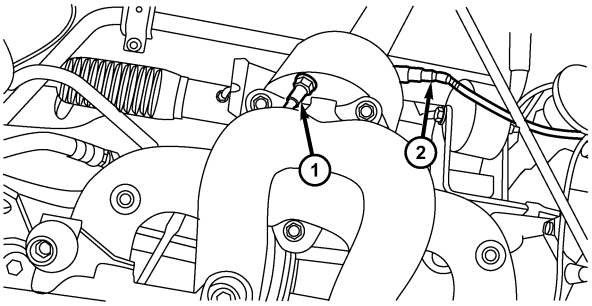

besm030017

3. CHECK O_2 SENSOR HEATER POWER SUPPLY CIRCUIT

- Turn ignition switch on.
- Check supply voltage between O_2 sensor terminal 2 and ground in the O_2 sensor electrical connector E-004.
- Battery voltage should exist.

Is the check result normal?

Yes >> Go to Step 5.

No >> Go to the next step.

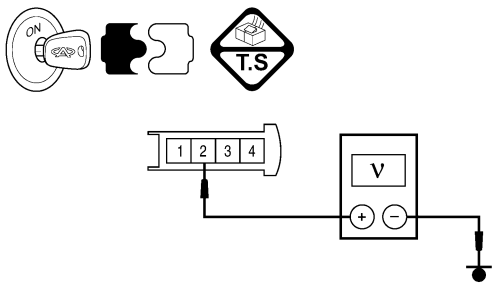

ltsmd030029

Downloaded from www.Manualslib.com manuals search engine

4. DETECT MALFUNCTIONING PART

- Check the following:

With EOBD (1.6L and 1.8L)

– Fuse 25, fuse 12, fuse 27, fuse 24
– Front fuse and relay box H2, H5, F3, A1, A13, G5
– Harness between O_2 sensor and fuse

Without EOBD (1.6L)

– Fuse 23, fuse 12, fuse 27, fuse 22, fuse 25
– Front fuse and relay box H2, H5, H3, F3, A1, G2, G5
– Harness between O_2 sensor and fuse

Without EOBD (1.8L)

– Fuse 22, fuse 25, fuse 12, fuse 27, fuse 24
– Front fuse and relay box H2, H3, H5, F3, A1, A13, G5
– Harness between O_2 sensor and fuse

- Repair or replace if necessary.
- With the X-431 scan tool, read ECM DTCs.
- Refer to ″DTC Confirmation Procedure″.

Is DTC P0031 still present?

Yes >> Go to the next step.

No >> The system is now operating properly.
Reassemble the vehicle and road test to verify the customers complaint is repaired.

5. CHECK O_2 SENSOR HEATER CONTROL CIRCUIT FOR OPEN OR SHORT

- Turn ignition switch off.
- Disconnect ECM connector.
- Check harness continuity between ECM terminal and O_2 sensor terminal.
- Continuity should exist.
- Check sensor heater control circuit.

O_2 SENSOR	TERMINAL	
	ECM	Oxygen sensor
Upstream O_2 sensor heater	• 48 (With EOBD) • 1 (Without EOBD)	1

- Check harness short to ground.

Is the check result normal?

Yes >> Go to the next step.

No >> Repair or replace the circuit for an open or short in harness or connectors.

Downloaded from www.Manualslib.com manuals search engine

6. CHECK O_2 SENSOR HEATER

- Check the resistance between O_2 sensor heater terminals, component side.

TERMINAL NO.	RESISTANCE	
1 and 2 (including cable and connector)	Approximately 9 Ω	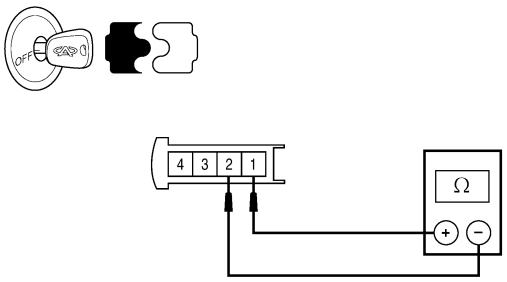 Itsmd030030

- Check the resistance between O_2 sensor terminals, component side.

TERMINAL NO.	RESISTANCE	
1 and 3 & 4	∞ Ω (Continuity should not exist)	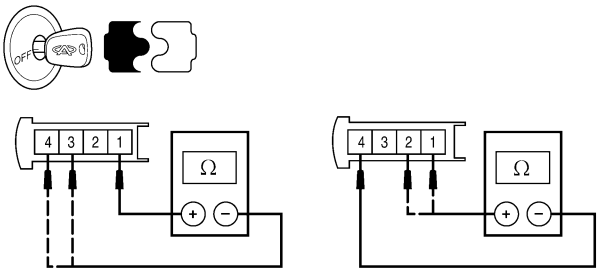 Itsmd030055
4 and 1 & 2		

Is the check result normal?

Yes >> Go to the next step.

No >> Replace O_2 sensor.

7. CHECK DTC

- With the X-431 scan tool, read ECM DTCs.
- Refer to "DTC Confirmation Procedure".

Is DTC P0031 still present?

Yes >> Replace the ECM.

NOTE : The Immobilizer control module must be matched to the new ECM (See ECM Removal & Installation in Section 03 Electronic Engine Controls).

No >> The system is now operating properly.
Reassemble the vehicle and road test to verify the customers complaint is repaired.

Downloaded from www.Manualslib.com manuals search engine

P0032 - O_2 Sensor 1 Heater Control Circuit High

EEC - 1.6L - 1.8L - O_2S - 01 - WITH EOBD

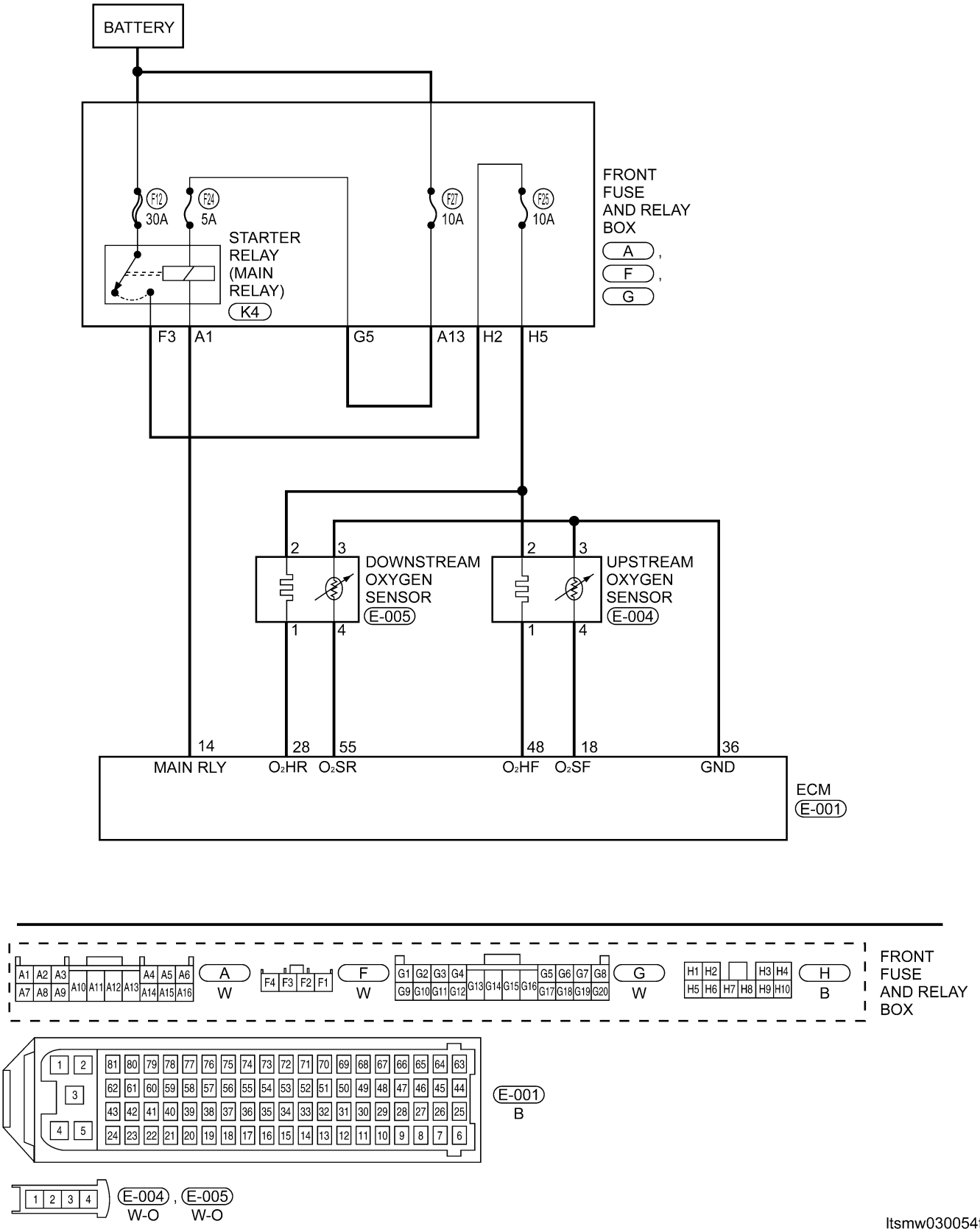

ltsmw030054t

Downloaded from www.Manualslib.com manuals search engine

EEC - 1.6L - 1.8L - O_2S - 02 - WITHOUT EOBD

W1.6 : WITH 1.6L ENGINE SYSTEM
W1.8 : WITH 1.8L ENGINE SYSTEM

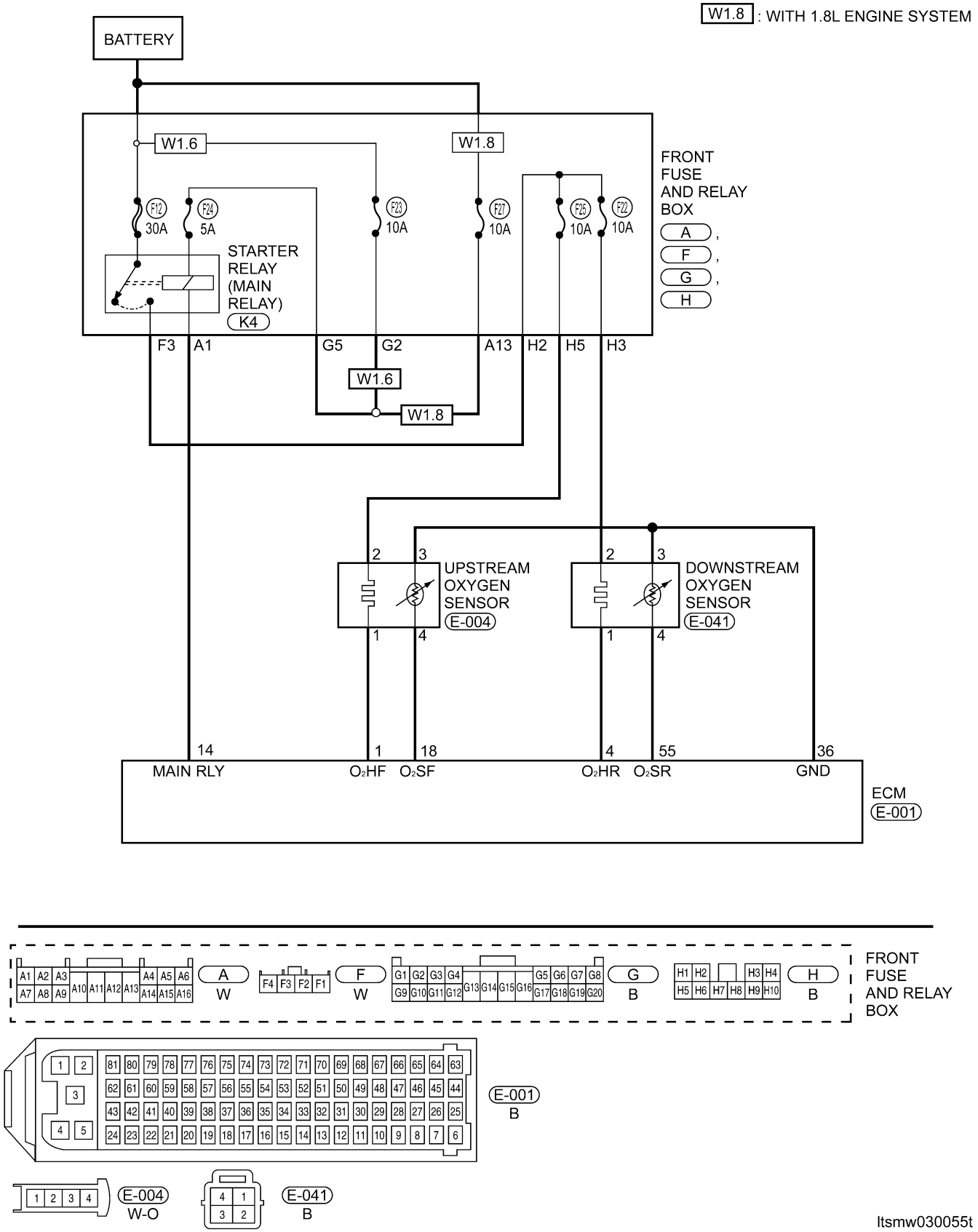

Downloaded from www.Manualslib.com manuals search engine

Check reference values between ECM terminals and ground under the following conditions:

ECM TERMINAL NO.	ITEM	CONDITION	DATA (DC VOLTAGE)
18	Upstream O_2 sensor	• Engine is running • Warm-up condition	Approximately 0.1 V - 0.9 V (Change 5 - 8 times in 10 seconds periodically)
28 (With EOBD) 4 (Without EOBD)	Downstream O_2 sensor heating	-	-
36	Sensor (GND)	• Warm-up condition • Idle	Approximately 0 V
48 (With EOBD) 1 (Without EOBD)	Upstream O_2 sensor heating	-	-
55	Downstream O_2 sensor	• Engine is running • Warm-up condition	Approximately 100 mV

On Board Diagnostic Logic

- Self-diagnosis detection logic.

DTC NO.	DTC DEFINITION	DTC DETECTION CONDITION	POSSIBLE CAUSE
P0032	O_2 sensor 1 heater control circuit high	Engine is running.	• Fuel quality • Oxygen Sensor •Harness or connectors (The sensor circuit is open or shorted) • ECM

DTC Confirmation Procedure:

Before performing the following procedure, confirm that battery voltage is more than 12 V.

- Turn ignition switch off.
- Connect the X-431 scan tool to the Data Link Connector (DLC) - use the most current software available.
- Turn ignition switch on and select view data stream.
- Start engine and warm it up to the normal operating temperature.
- Turn ignition switch off and wait at least 10 seconds.
- Start engine and keep the engine speed 2000 RPM for at least 1 minute.
- Let engine idle for 2 minutes.
- If DTC is detected, go to Diagnostic Procedure - Step 1.
- If the DTC is not detected, the DTC condition is intermittent (See Diagnosis & Testing Diagnostic Help in Section 03 Electronic Engine Controls).

NOTE :
While performing electrical diagnosis & testing, always refer to the electrical schematics for specific circuit and component information.

Downloaded from www.Manualslib.com manuals search engine

Diagnostic Procedure

1. CHECK GROUND CONNECTIONS

- Turn ignition switch off.
- Loosen and retighten ground screws on the body (See Ground Inspection in Section 03 Electronic Engine Controls).
- Inspect ground connections E-207 and E-208 mounting position (See Vehicle Wiring Harness Layout - Engine Room Harness (With 1.6L/1.8L Engine) in Section 16 Wiring).

Is ground connections OK?

Yes >> Go to the next step.

No >> Repair or replace ground connections.

2. CHECK O_2 SENSOR ELECTRICAL CONNECTOR

- Disconnect the O_2 sensor (1) electrical connector E-004.
- Inspect the electrical connector for damage.

Is the electrical connector OK?

Yes >> Go to the next step.

No >> Repair or replace the electrical connector as necessary.

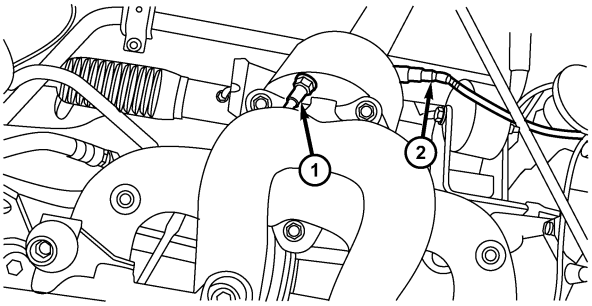

besm030017

3. CHECK O_2 SENSOR POWER SUPPLY CIRCUIT

- Turn ignition switch on.
- Check O_2 sensor supply voltage between O_2 sensor terminal 2 and ground in the O_2 sensor electrical connector E-004.
- Battery voltage should exist.

Is the check result normal?

Yes >> Go to Step 5.

No >> Go to the next step.

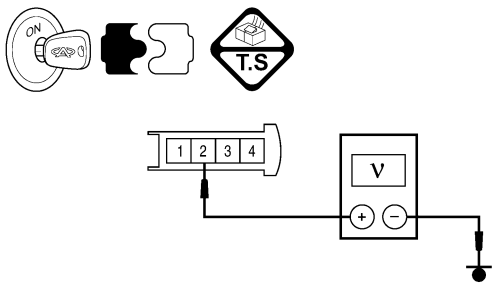

ltsmd030029

Downloaded from www.Manualslib.com manuals search engine

4. DETECT MALFUNCTIONING PART

- Check the following:

With EOBD (1.6L and 1.8L)

– Front fuse and relay box H2, H5, F3, A1, A13, G5
– Fuse 25, fuse 12, fuse 27, fuse 24

Without EOBD (1.6L)

– Front fuse and relay box H2, H5, H3, F3, A1, G2, G5
– Fuse 23, fuse 12, fuse 27, fuse 22, fuse 25

Without EOBD (1.8L)

– Front fuse and relay box H2, H3, H5, F3, A1, A13, G5
– Fuse 22, fuse 25, fuse 12, fuse 27, fuse 24

- Check the harness for an open or a short between the O_2 sensor and fuse.

Is the check result normal?

Yes >> Go to the next step.

No >> Repair or replace malfunctioning parts as necessary.

5. CHECK THE O_2 SENSOR HEATER CONTROL CIRCUIT FOR SHORT

- Turn ignition switch off.
- Disconnect ECM connector.
- Check harness continuity between ECM terminal and O_2 sensor terminal.
- Continuity should exist.
- Check the control circuit of the sensor heater.

O_2 SENSOR	ECM TERMINAL	O_2 SENSOR TERMINAL
Upstream O_2 sensor heater (With EOBD)	48	1
Upstream O_2 sensor heater (Without EOBD)	1	1

- Check harness short to power supply circuit.

Is the check result normal?

Yes >> Go to the next step.

No >> Repair or replace circuit for a short to power in harness or connectors.

Downloaded from www.Manualslib.com manuals search engine

6. CHECK THE O_2 SENSOR HEATER

- Check the resistance between O_2 sensor heater terminals, component side.

TERMINAL NO.	RESISTANCE	
1 and 2 (including cable and connector)	Approximately 9 Ω	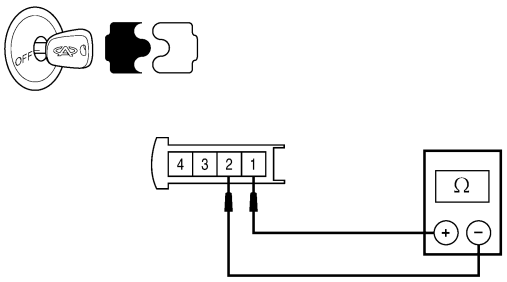 ltsmd030030

- Check the resistance between O_2 sensor terminals, component side.

TERMINAL NO.	RESISTANCE	
1 and 3 & 4	∞ Ω (Continuity should not exist)	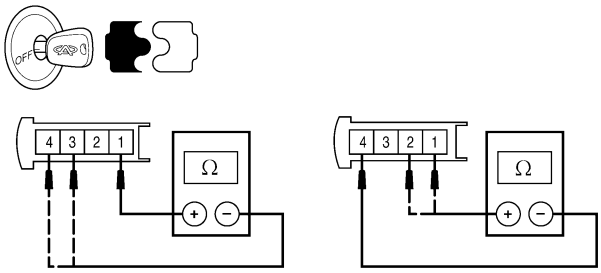 ltsmd030055
4 and 1 & 2		

Is the check result normal?

Yes >> Go to the next step.

No >> Replace the O_2 sensor.

7. CHECK DTC

- With the X-431 scan tool, read ECM DTCs.
- Refer to "DTC Confirmation Procedure".

Is DTC P0032 still present?

Yes >> Replace the ECM.

NOTE : The Immobilizer control module must be matched to the new ECM (See ECM Removal & Installation in Section 03 Electronic Engine Controls).

No >> The system is now operating properly.
Reassemble the vehicle and road test to verify the customers complaint is repaired.

Downloaded from www.Manualslib.com manuals search engine

P0102 - Mass Or Volume Air Flow Circuit Low Input

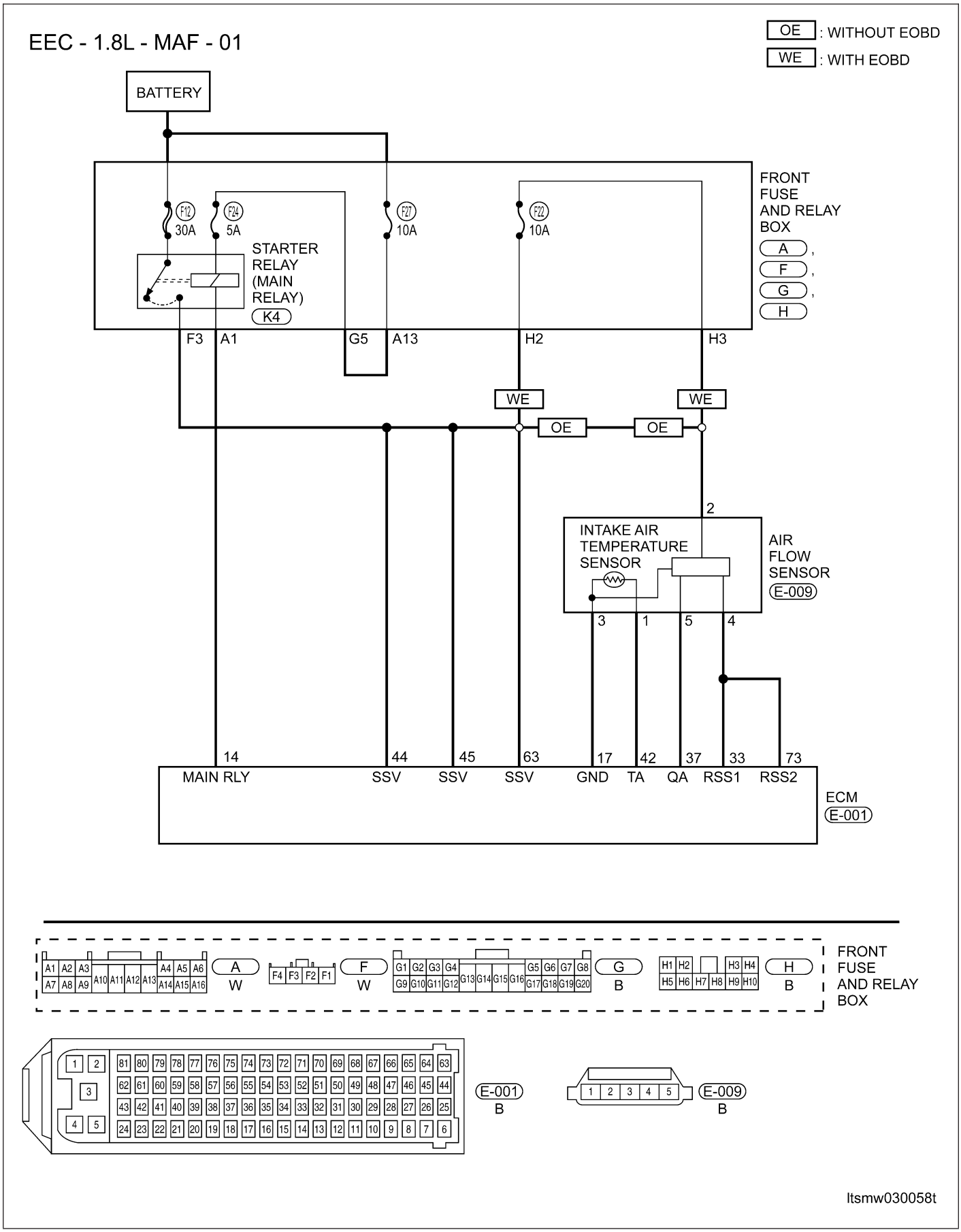

Downloaded from www.Manualslib.com manuals search engine

Check reference values between ECM terminals and ground under the following conditions:

ECM TERMINAL NO.	ITEM	CONDITION	DATA (AVERAGE DC VOLTAGE)
17	Sensor (GND)	• Engine is running • Warm-up condition: 78°C • Idle: 795 RPM • IAT: 36°C • IAT signal voltage: 1.88 V	Approximately 0 V
33	Regulated sensor supply 1		5 V
37	Air flow sensor		Approximately 322 kg/h
			Approximately 1.39 V
73	Regulated sensor supply 1		5 V

On Board Diagnostic Logic

- Self-diagnosis detection logic.

DTC NO.	DTC DEFINITION	DTC DETECTION CONDITION	DTC SET CONDITION	POSSIBLE CAUSE
P0102	Mass or Volume Air Flow (MAF) circuit low input	Ignition switch on or engine is running	ECM detected that the input signal is out of the acceptable range.	• MAF sensor • Intake air leaks • Harness or connectors (The sensor circuit is open or shorted) • ECM

DTC Confirmation Procedure:

Before performing the following procedure, confirm that battery voltage is more than 12 V.

- Turn ignition switch off.
- Connect the X-431 scan tool to the Data Link Connector (DLC) - use the most current software available.
- Turn ignition switch on.
- With the scan tool, record and erase stored DTCs in the ECM.
- Start engine and warm it to normal operating temperature, then select view DTC and data stream.
- If the DTC is detected, the DTC condition is current. Go to Diagnostic Procedure - Step 1.
- If the DTC is not detected, the DTC condition is intermittent (See Diagnostic Help and Intermittent DTC Troubleshooting in Section 03 Electronic Engine Controls for more information.

NOTE :
While performing electrical diagnosis & testing, always refer to the electrical schematics for specific circuit and component information.

Diagnostic Procedure

1. CHECK GROUND CONNECTIONS

- Turn ignition switch off.
- Loosen and retighten ground screws on the body (See Ground Inspection in Section 03 Electronic Engine Controls).
- Inspect ground connections E-207 and E-208 mounting position (See Vehicle Wiring Harness Layout - Engine Room Harness (With 1.6L/1.8L Engine) in Section 16 Wiring).

Is ground connections OK?

Yes >> Go to the next step.

No >> Repair or replace ground connections.

Downloaded from www.Manualslib.com manuals search engine

2. CHECK INTAKE SYSTEM

- Check the following:
  - Air duct
  - Vacuum hoses
  - Intake air passage between air duct and manifold

Is the check result normal?

Yes >> Go to the next step.

No >> Reconnect the connectors or replace the malfunctioning part.

3. CHECK MASS AIR FLOW (MAF) SENSOR ELECTRICAL CONNECTOR

- Disconnect the MAF sensor (1) electrical connector.
- Inspect the electrical connector for damage.

Is the electrical connector OK?

Yes >> Go to the next step.

No >> Repair or replace the electrical connector as necessary.

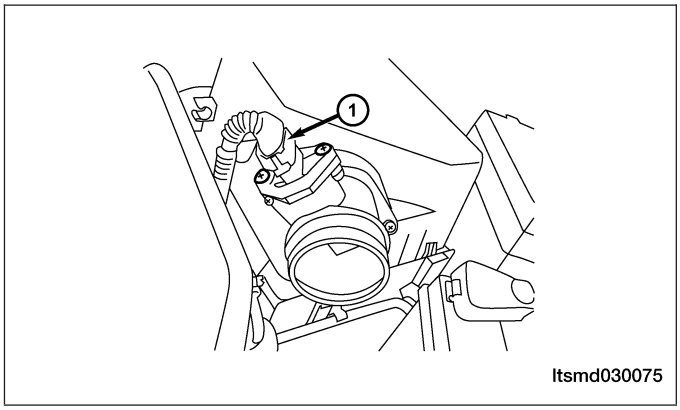

4. CHECK THE MASS AIR FLOW (MAF) SENSOR POWER SUPPLY CIRCUIT

- Turn ignition switch on.
- Check voltage between MAF sensor terminal 2 and ground in the MAF sensor electrical connector E-009.
- Battery voltage should exist.

Is the check result normal?

Yes >> Go to step 6.

No >> Go to the next step.

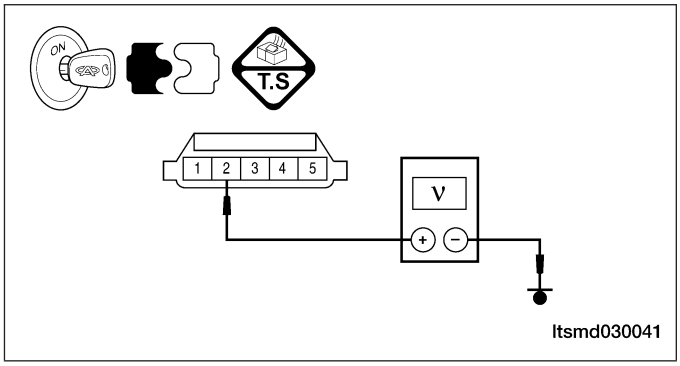

Downloaded from www.Manualslib.com manuals search engine

5. DETECT MALFUNCTIONING PART

- Check the following:

With EOBD

– Fuse 21, fuse 22, fuse 24, fuse 27
– Front fuse and relay box H2, H3, F3, A1, A13, G5
– Harness between air flow sensor and fuse

Without EOBD

– Fuse 21, fuse 24, fuse 27
– Front fuse and relay box F3, A1, A13, G5
– Harness between air flow sensor and fuse

Is the check result normal?

Yes >> Go to the next step.

No >> Repair or replace malfunctioning parts as necessary.

6. CHECK THE MAF SENSOR REFERENCE CIRCUIT

- Check voltage between MAF sensor terminal 4 and ground in the MAF sensor electrical connector E-009.
- 5 V should exist.

Is the check result normal?

Yes >> Go to the next step.

No >> Repair or replace the circuit for an open or short to ground in harness or connectors.
If circuit is normal, go to the next step.

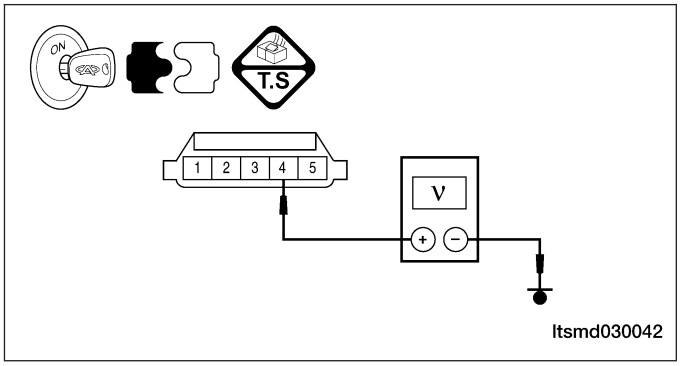

7. CHECK THE MAF SENSOR GROUND CIRCUIT FOR AN OPEN OR SHORT

- Turn ignition switch off.
- Disconnect ECM harness connector.
- Check harness continuity between MAF sensor terminal 3 and ECM terminal 17.
- Continuity should exist.
- Check harness for short to ground.

Is the check result normal?

Yes >> Go to the next step.

No >> Repair or replace circuit for an open in harness or connectors.

Downloaded from www.Manualslib.com manuals search engine

8. CHECK THE MAF SENSOR OUTPUT SIGNAL CIRCUIT FOR AN OPEN OR SHORT

- Check harness continuity between MAF sensor terminal 5 and ECM terminal 37.
- Continuity should exist.
- Check harness for a short to ground.

Is the check result normal?

Yes >> Go to the next step.

No >> Repair or replace the circuit for an open or short to ground in harness or connectors.

9. CHECK THE MAF SENSOR

- Install all removed parts.
- Start engine.
- Check MAF sensor signal in data stream with the X-431.

TERMINAL NO.	ITEM	CONDITION	DATA (AVERAGE DC VOLTAGE)
37	Air flow sensor	• Engine is running • ECT: 78°C • Idle: 795 RPM • IAT: 36°C • IAT signal: 1.88 V	Approximately 322 kg/h
			Approximately 1.39 V

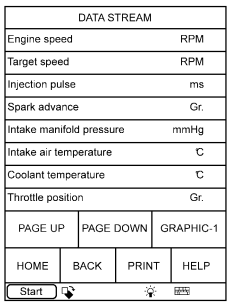

ltsmd030001t

- If without the X-431, check voltage between MAF sensor terminal 5 and ground.

TERMINAL NO.	ITEM	CONDITION	DATA (AVERAGE DC VOLTAGE)
37	Air flow sensor	• Engine is running • ECT: 78°C • Idle: 795 RPM • IAT: 36°C • IAT signal: 1.88 V	Approximately 1.39 V

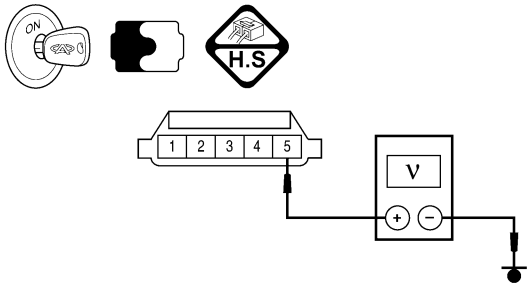

ltsmd030043

Downloaded from www.Manualslib.com manuals search engine

- If the voltage is out of specification, proceed the following:

Check for the cause of uneven air flow through MAF sensor.

  – Air cleaner seal
  – Crushed air ducts
  – Uneven dirt of air cleaner element

- If the parts malfunctioning, repair or replace them.
- If the parts OK, clean the MAF sensor, then check the signal of the MAF sensor.

Is the MAF signal normal?

Yes >> Go to the next step.

No >> Replace MAF sensor.

10. CHECK DTC

- With the X-431 scan tool, read ECM DTCs.
- Refer to ″DTC Confirmation Procedure″.

Is DTC P0102 still present?

Yes >> Replace the ECM.

NOTE : The Immobilizer control module must be matched to the new ECM (See ECM Removal & Installation in Section 03 Electronic Engine Controls).

No >> The system is now operating properly.
Reassemble the vehicle and road test to verify the customers complaint is repaired.

Downloaded from www.Manualslib.com manuals search engine

P0103 - Mass Or Volume Air Flow Circuit High Input

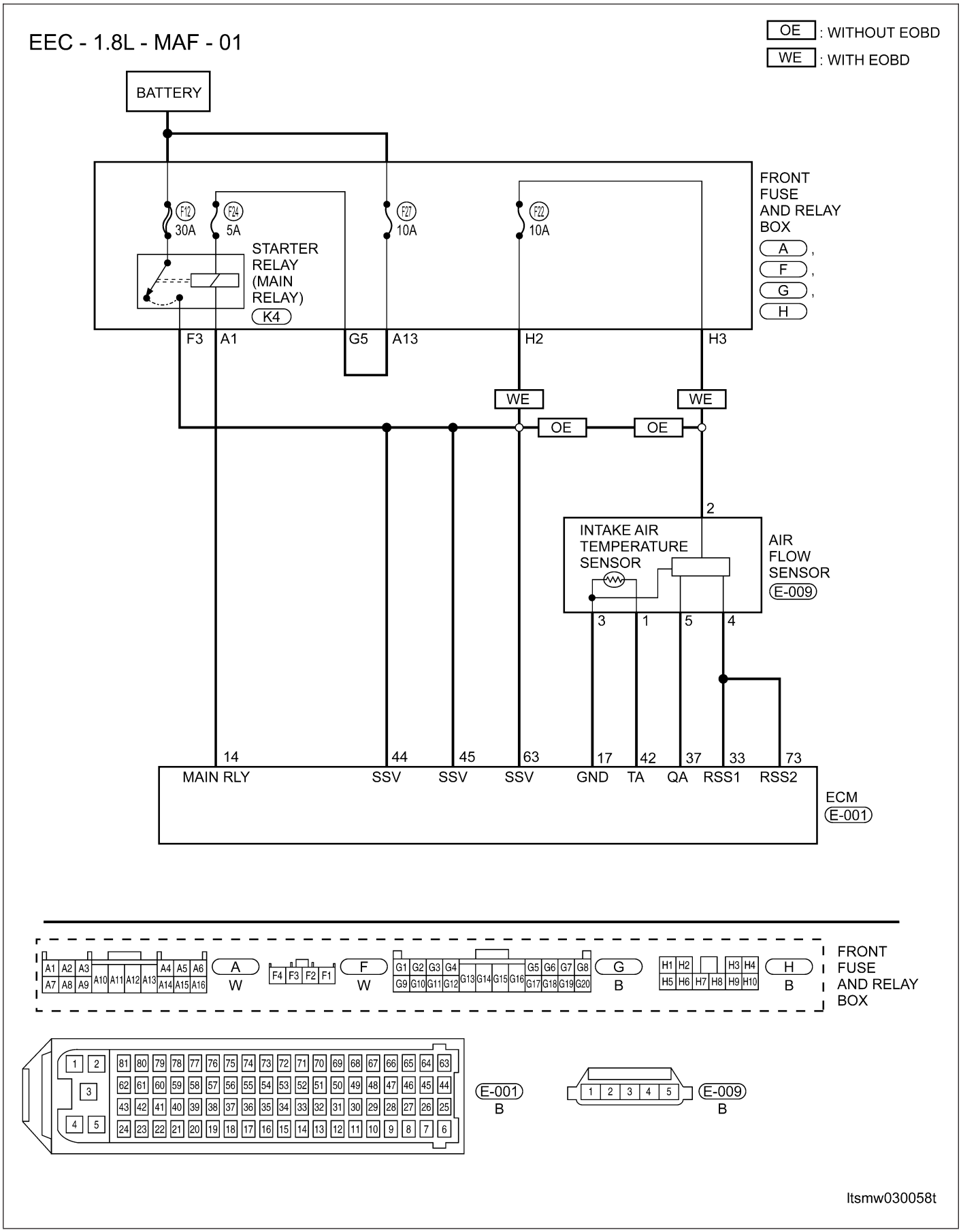

Downloaded from www.Manualslib.com manuals search engine

Check reference values between ECM terminals and ground under the following conditions:

ECM TERMINAL NO.	ITEM	CONDITION	DATA (AVERAGE DC VOLTAGE)
17	Sensor (GND)	Ignition switch on	Approximately 0 V
33	Regulated sensor supply 1		5 V
37	Air flow sensor	• Engine is running • Warm-up condition ECT: 78°C • Idle: 795 RPM • IAT: 36°C • IAT signal: 1.88 V	Approximately 322 kg/h or approximately 1.39 V
		• Engine is running • Warm-up condition ECT: 52°C • Idle: 910 RPM • IAT: 30°C • IAT signal: 2.17 V	Approximately 420 kg/h or approximately 1.52 V
73	Regulated sensor supply 1	Ignition switch on	5 V

On Board Diagnostic Logic

- Self-diagnosis detection logic.

DTC NO.	DTC DEFINITION	DTC DETECTION CONDITION	DTC SET CONDITION	POSSIBLE CAUSE
P0103	Mass or Volume Air Flow (MAF) circuit high input	Ignition switch on or engine is running	ECM detected that the input signal is out of the acceptable range.	• Mass or Volume Air Flow (MAF) sensor • Harness or connectors (The sensor circuit is open or shorted) • ECM

DTC Confirmation Procedure:

Before performing the following procedure, confirm that battery voltage is more than 12 V.

- Turn ignition switch off.
- Connect the X-431 scan tool to the Data Link Connector (DLC) - use the most current software available.
- Turn ignition switch on.
- With the scan tool, record and erase stored DTCs in the ECM.
- Start engine and warm it to normal operating temperature, then select view DTC and data stream.
- If the DTC is detected, the DTC condition is current. Go to Diagnostic Procedure - Step 1.
- If the DTC is not detected, the DTC condition is intermittent (See Diagnostic Help and Intermittent DTC Troubleshooting in Section 03 Electronic Engine Controls for more information.

NOTE :
While performing electrical diagnosis & testing, always refer to the electrical schematics for specific circuit and component information.

Downloaded from www.Manualslib.com manuals search engine

Diagnostic Procedure

1. CHECK GROUND CONNECTIONS

- Turn ignition switch off.
- Loosen and retighten ground screws on the body (See Ground Inspection in Section 03 Electronic Engine Controls).
- Inspect ground connections E-207 and E-208 mounting position (See Vehicle Wiring Harness Layout - Engine Room Harness (With 1.6L/1.8L Engine) in Section 16 Wiring).

Is ground connections OK?

Yes >> Go to the next step.

No >> Repair or replace ground harness or connections.

2. CHECK INTAKE SYSTEM

- Check the following for connection.
  - Air cleaner
  - Intake air duct

Is the check result normal?

Yes >> Go to the next step.

No >> Clean or replace the components.

3. CHECK MASS AIR FLOW (MAF) SENSOR ELECTRICAL CONNECTOR

- Disconnect the MAF sensor (1) electrical connector.
- Inspect the electrical connector for damage.

Is the electrical connector OK?

Yes >> Go to the next step.

No >> Repair or replace the electrical connector as necessary.

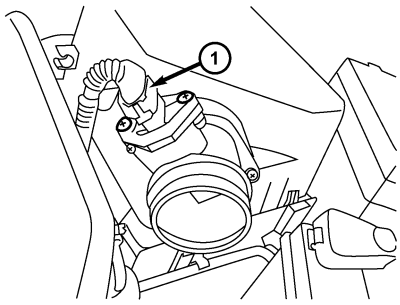

ltsmd030075

Downloaded from www.Manualslib.com manuals search engine

4. CHECK THE MASS AIR FLOW (MAF) SENSOR POWER SUPPLY CIRCUIT

- Turn ignition switch on.
- Check voltage between the MAF sensor terminal 4 and ground in the MAF sensor electrical connector E-009.
- 5 V should exist.

Is the check result normal?

Yes >> Go to step 6.

No >> Go to the next step.

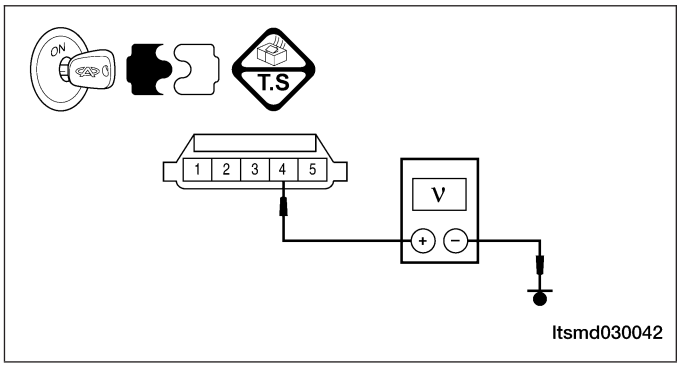

5. DETECT MALFUNCTIONING PART

- Check harness for short to power between air flow sensor and ECM.

Is the check result normal?

Yes >> Go to the next step.

No >> Repair or replace the circuit for short to power in harness or connectors.

6. CHECK THE MAF SENSOR GROUND CIRCUIT FOR A SHORT

- Turn ignition switch off.
- Disconnect ECM harness connector.
- Check harness continuity between MAF sensor terminal 3 and ECM terminal 17.
- Continuity should exist.
- Also check harness for short to power.

Is the check result normal?

Yes >> Go to the next step.

No >> Repair or replace the circuit for a short to power in harness or connectors.

7. CHECK THE MAF SENSOR OUTPUT SIGNAL CIRCUIT FOR SHORT TO POWER

- Check harness continuity between MAF sensor terminal 5 and ECM terminal 37.
- Continuity should exist.
- Also check harness for short to power.

Is the check result normal?

Yes >> Go to the next step.

No >> Repair or replace circuit for short to power in harness or connectors.

Downloaded from www.Manualslib.com manuals search engine

8. CHECK THE MAF SENSOR

- Install all removed parts.
- Start engine.
- Check air flow signal in data stream with the X-431.

TERMINAL NO.	ITEM	CONDITION	DATA (AVERAGE DC VOLTAGE)
37	Air flow sensor	• Engine is running • ECT: 78°C • Idle: 795 RPM • IAT: 36°C • IAT signal: 1.88 V	Approximately 322 kg/h
			Approximately 1.39 V

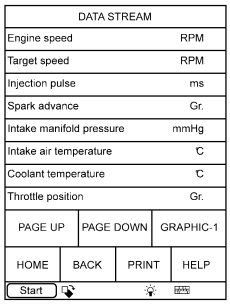

ltsmd030001t

- If without the X-431, check voltage between MAF sensor terminal 5 and ground.

TERMINAL NO.	ITEM	CONDITION	DATA (AVERAGE DC VOLTAGE)
37	Air flow sensor	• Engine is running • ECT: 78°C • Idle: 795 RPM • IAT: 36°C • IAT signal: 1.88 V	Approximately 1.39 V

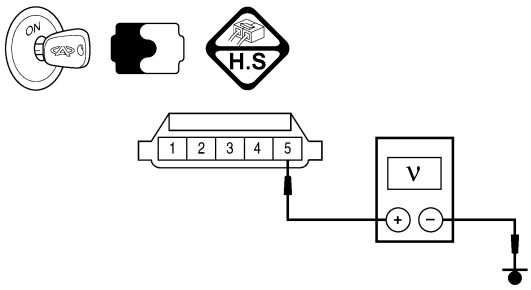

ltsmd030043

Is the signal voltage of MAF normal?

Yes >> Go to the next step.

No >> Replace the MAF sensor.

9. CHECK DTC

- With the X-431 scan tool, read ECM DTCs.
- Refer to "DTC Confirmation Procedure".

Is DTC P0103 still present?

Yes >> Replace the ECM.

NOTE : The Immobilizer control module must be matched to the new ECM (See ECM Removal & Installation in Section 03 Electronic Engine Controls).

No >> The system is now operating properly.
Reassemble the vehicle and road test to verify the customers complaint is repaired.

Downloaded from www.Manualslib.com manuals search engine

P0105 - Manifold Absolute Pressure/Barometric Pressure Circuit
P0106 - Manifold Absolute Pressure Or Barometric Pressure Range/Performance

EEC - 1.6L - MAP - 01

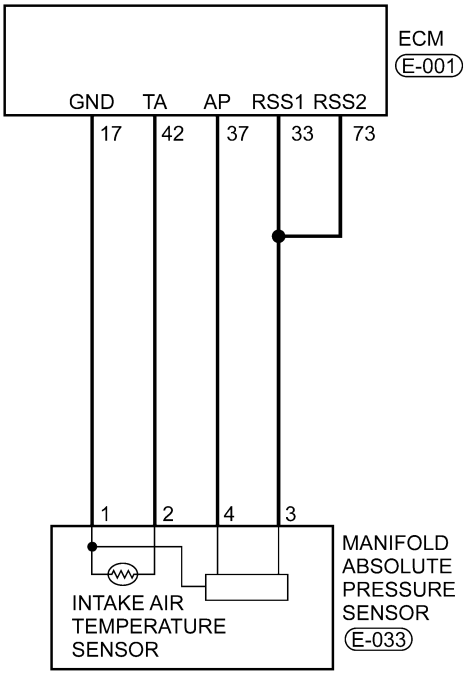

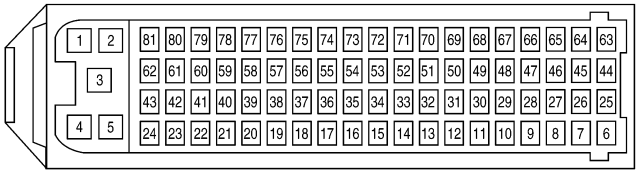

E-001
B

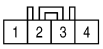

E-033
B

ltsmw030052t

Downloaded from www.Manualslib.com manuals search engine

Check reference values between ECM terminals and ground under the following conditions:

ECM TERMINAL NO.	ITEM	CONDITION		DATA (DC VOLTAGE)
17	Sensor (GND)	Engine: Running	-	Approximately 0 V
33	Regulated sensor supply 1		-	Approximately 5 V
37	Manifold Absolute Pressure (MAP) sensor		• Engine running: Idle • Press accelerator pedal slowly.	Approximately 1.3 V
			• Press accelerator pedal quickly.	Up to Approximately 4 V (instantaneous)
73	Sensor power supply 1		-	Approximately 5 V

On Board Diagnostic Logic

- Self-diagnosis detection logic.

DTC NO.	DTC DEFINITION	DTC DETECTION CONDITION	DTC SET CONDITION	POSSIBLE CAUSE
P0105 (1.6L)	Manifold absolute pressure/barometric pressure circuit	• Ignition switch:ON • Engine: Running	Signal output is out of acceptable range for a few seconds continuously.	• MAP sensor • Harness or connectors • ECM
P0106 (1.6L)	Manifold absolute pressure or barometric pressure range/performance			• MAP sensor • Harness or connectors • ECM

DTC Confirmation Procedure:

Before performing the following procedure, confirm that battery voltage is more than 12 V.
- Turn ignition switch off.
- Connect the X-431 scan tool to the Data Link Connector (DLC) - use the most current software available.
- Turn ignition switch on.
- With the scan tool, record and erase stored DTCs in the ECM.
- Start engine and warm it to normal operating temperature, then select view DTC and data stream.
- If the DTC is detected, the DTC condition is current. Go to Diagnostic Procedure - Step 1.
- If the DTC is not detected, the DTC condition is intermittent (See Diagnostic Help and Intermittent DTC Troubleshooting in Section 03 Electronic Engine Controls for more information.

Diagnostic Procedure

1. CHECK GROUND CONNECTIONS

- Turn ignition switch off.
- Loosen and retighten ground screws on the body (See Ground Inspection in Section 03 Electronic Engine Controls).
- Inspect ground connections E-207 and E-208 mounting position (See Vehicle Wiring Harness Layout - Engine Room Harness (With 1.6L/1.8L Engine) in Section 16 Wiring).

Is ground connections OK?

Yes >> Go to the next step.

No >> Repair or replace ground connections.

Downloaded from www.Manualslib.com manuals search engine

2. CHECK MANIFOLD ABSOLUTE PRESSURE (MAP) SENSOR ELECTRICAL CONNECTOR

- Disconnect the MAP sensor (1) electrical connector.
- Inspect the electrical connector for damage.

Is the electrical connector OK?

Yes >> Go to the next step.

No >> Repair or replace the electrical connector as necessary.

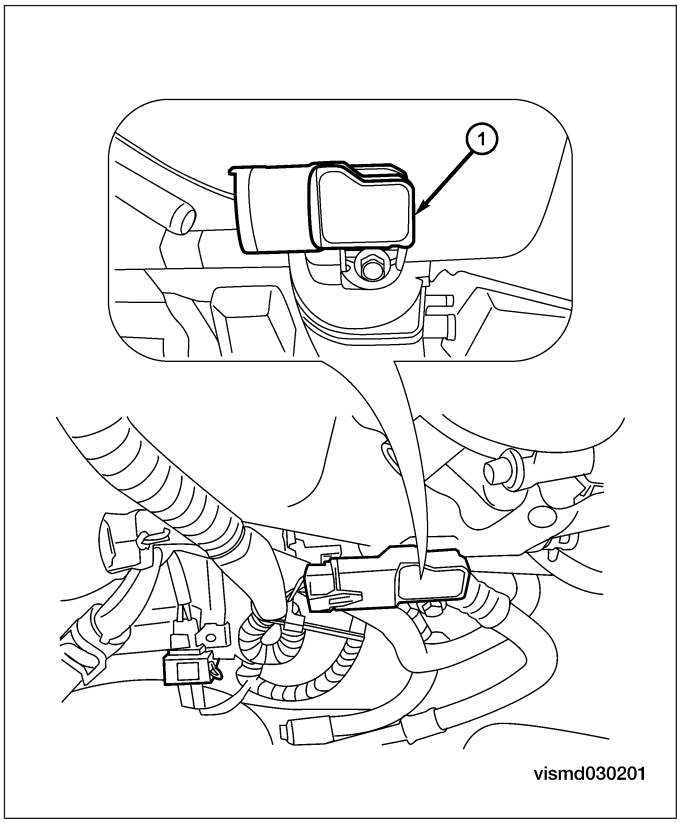

3. CHECK MANIFOLD ABSOLUTE PRESSURE (MAP) SENSOR POWER SUPPLY

- Turn ignition switch on.
- Check MAP sensor supply between MAP sensor connector terminal 1 and 3.
- 5 V should exists.

Is the check result normal?

Yes >> Go to step 5.

No >> Go to the next step.

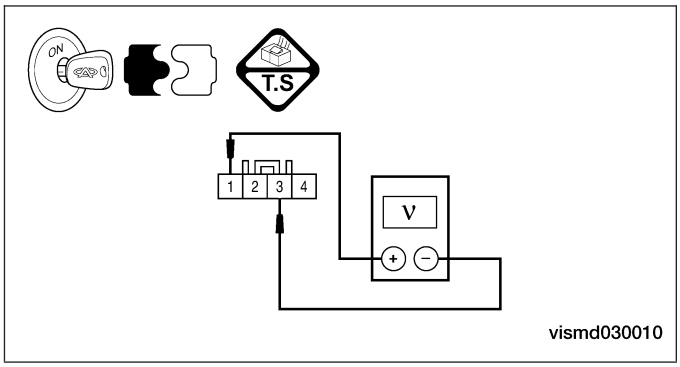

Downloaded from www.Manualslib.com manuals search engine

4. CHECK THE MAP SENSOR POWER SUPPLY CIRCUIT FOR OPEN OR SHORT

- Check MAP sensor supply voltage between sensor connector E-033, terminal 3 and ground in the sensor electrical connector.
- Approximately 5 V should exist.

Is the check result normal?

Yes >> Go to the next step.

No >> Repair or replace circuit for an open or short to ground or short to power in harness or connectors.
If circuit is normal, go to the next step.

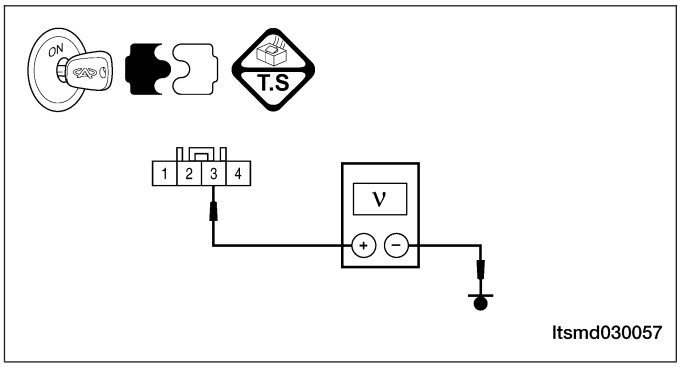

5. CHECK THE MAP SENSOR GROUND CIRCUIT FOR AN OPEN

- Turn ignition switch off.
- Disconnect ECM sensor harness connector.
- Check for harness continuity between terminal 1 in MAP sensor connector E-033 and terminal 17 in ECM connector E-001.
- Continuity should exist.

Is the check result normal?

Yes >> Go to the next step.

No >> Repair or replace circuit for an open in harness or connectors.

6. CHECK THE MAP SENSOR OUTPUT SIGNAL CIRCUIT FOR AN OPEN OR HIGH RESISTANCE

- Check for harness continuity between MAP sensor terminal 4 and ECM terminal 37.
- Continuity should exist.

Is the check result normal?

Yes >> Go to the next step.

No >> Repair or replace circuit for an open or high resistance in harness or connectors.

Downloaded from www.Manualslib.com manuals search engine

7. CHECK MAP SENSOR SIGNAL

- Check MAP sensor signal between sensor terminal 4 and ground.

TERMINAL NO.	ITEM	CONDITION		DATA (DC VOLTAGE)
4	MAP sensor	Engine: Running	• Engine running: Idle • Press accelerator pedal slowly	Approximately 1.3 V
			• Press accelerator pedal quickly	Up to approximately 4 V (instantaneous)

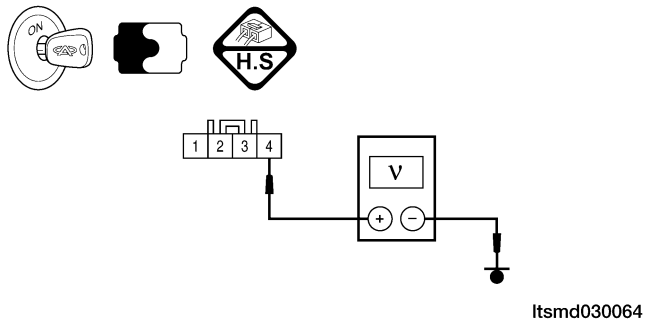

Is the check result normal?

Yes >> Go to step 9.

No >> Go to the next step.

8. CHECK THE MAP SENSOR

- Check sensor as follow:
  - Remove the sensor.
  - Visually check and clean the pressure entrance of the sensor for chipping and damage.

Is the check result normal?

Yes >> Replace the MAP sensor with a known good MAP sensor.
Select view DTC on the X-431 screen.
- If DTC P0105 or P0106 is not current present, the system is OK.
- If DTC P0105 or P0106 is current present, go to step 8.

No >> Clear or replace the MAP sensor.

9. CHECK DTC

- With the X-431 scan tool, read ECM DTCs.
- Refer to ″DTC Confirmation Procedure″.

Is DTC P0105 or P0106 still present?

Yes >> Replace the ECM.

NOTE : The Immobilizer control module must be matched to the new ECM (See ECM Removal & Installation in Section 03 Electronic Engine Controls).

No >> The system is now operating properly.
Reassemble the vehicle and road test to verify the customers complaint is repaired.

Downloaded from www.Manualslib.com manuals search engine

P0107 - Manifold Absolute Pressure Or Barometric Pressure Low Input
P0108 - Manifold Absolute Pressure Or Barometric Pressure High Input

EEC - 1.6L - MAP - 01

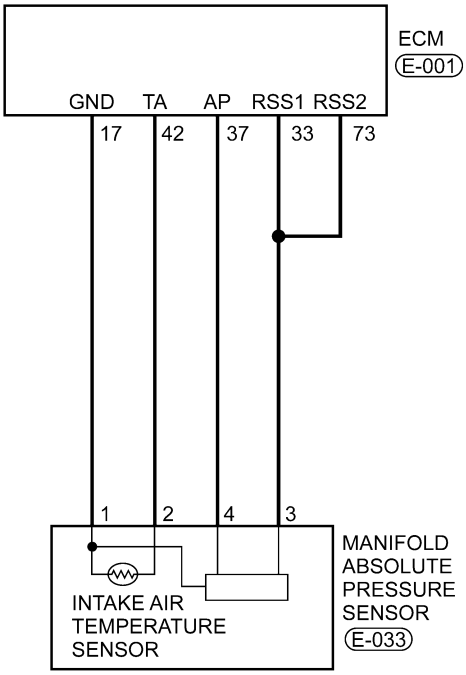

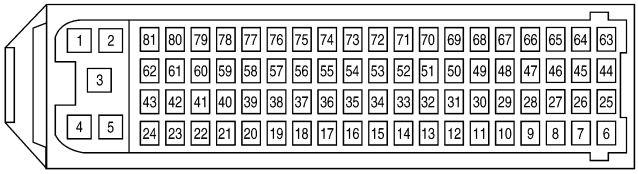

E-001
B

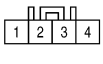

E-033
B

ltsmw030052t

Downloaded from www.Manualslib.com manuals search engine

Check reference values between ECM terminals and ground under the following conditions:

ECM TERMINAL NO.	ITEM	CONDITION		DATA (DC VOLTAGE)
17	Sensor (GND)	Ignition switch: ON	-	Approximately 0 V
33	Regulated sensor supply 1		-	Approximately 5 V
37	Manifold Absolute Pressure (MAP) sensor		Engine running: Idle	Approximately 1.3 V
			Engine running: 2000 RPM	Approximately 1.5 V
73	Regulated sensor supply 1		-	Approximately 5 V

On Board Diagnostic Logic

- Self-diagnosis detection logic.

DTC NO.	DTC DEFINITION	DTC DETECTION CONDITION	DTC SET CONDITION	POSSIBLE CAUSE
P0107 (1.6L)	Manifold absolute pressure or barometric pressure low input	• Ignition switch: ON • Engine: Running	Signal output is below minimum acceptable range for a few seconds continuously.	• MAP sensor • Harness or connectors • ECM
P0108 (1.6L)	Manifold Absolute Pressure or Barometric Pressure High Input		Signal output is above maximum acceptable range for a few seconds continuously.	• MAP sensor • Harness or connectors • ECM

DTC Confirmation Procedure:

Before performing the following procedure, confirm that battery voltage is more than 12 V.

- Turn ignition switch off.
- Connect the X-431 scan tool to the Data Link Connector (DLC) - use the most current software available.
- Turn ignition switch on.
- With the scan tool, record and erase stored DTCs in the ECM.
- Start engine and warm it to normal operating temperature, then select view DTC and data stream.
- If the DTC is detected, the DTC condition is current. Go to Diagnostic Procedure - Step 1.
- If the DTC is not detected, the DTC condition is intermittent (See Diagnostic Help and Intermittent DTC Troubleshooting in Section 03 Electronic Engine Controls for more information.

NOTE :
While performing electrical diagnosis & testing, always refer to the electrical schematics for specific circuit and component information.

Downloaded from www.Manualslib.com manuals search engine

Diagnostic Procedure

1. CHECK GROUND CONNECTIONS

- Turn ignition switch off.
- Loosen and retighten ground screws on the body (See DIAGNOSIS & TESTING Ground Inspection in Section 03 Electronic Engine Controls).
- Inspect ground connections E-207 and E-208 mounting position (See Vehicle Wiring Harness Layout - Engine Room Harness (With 1.6L/1.8L Engine) in Section 16 Wiring).

Is ground connections OK?

Yes >> Go to the next step.

No >> Repair or replace ground connections.

2. CHECK MANIFOLD ABSOLUTE PRESSURE (MAP) SENSOR ELECTRICAL CONNECTOR

- Disconnect the MAP sensor (1) electrical connector.
- Inspect the electrical connector for damage.

Is the electrical connector OK?

Yes >> Go to the next step.

No >> Repair or replace the electrical connector as necessary.

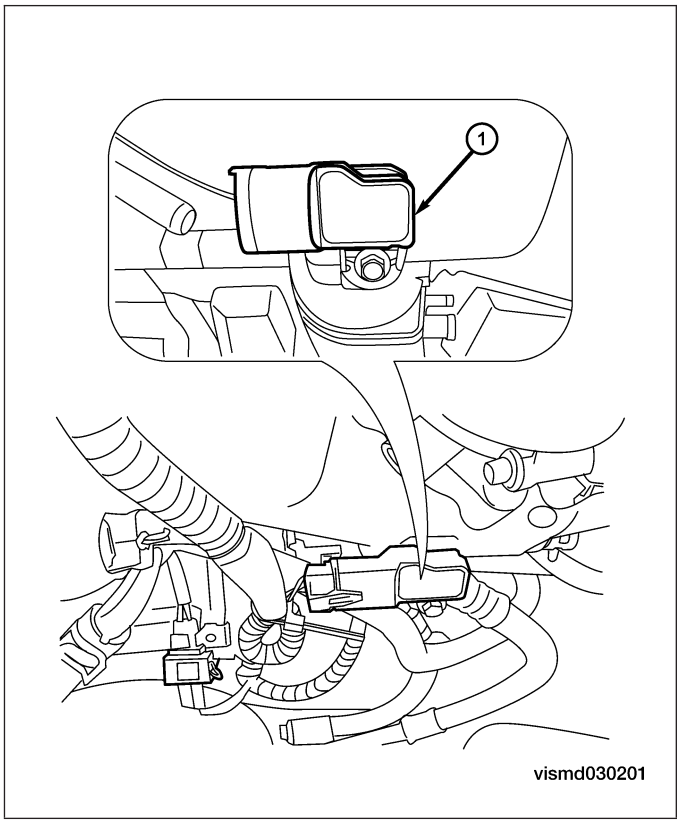

Downloaded from www.Manualslib.com manuals search engine

3. CHECK THE MANIFOLD ABSOLUTE PRESSURE (MAP) SENSOR POWER SUPPLY

- Turn ignition switch on.
- Check MAP sensor supply between MAP sensor connector terminal 1 and 3.
- 5 V should exists.

Is the check result normal?

Yes >> Go to step 5.

No >> Go to the next step.

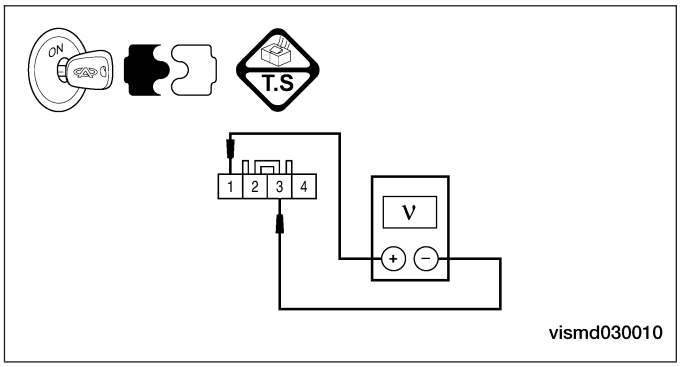

4. CHECK THE MAP SENSOR POWER SUPPLY CIRCUIT FOR AN OPEN OR SHORT

- Check MAP sensor supply voltage between sensor connector E-033, terminal 3 and ground in the sensor electrical connector.
- Approximately 5 V should exist.

Is the check result normal?

Yes >> Go to the next step.

No >> Repair or replace circuit for an open or short to ground in harness or connectors. If circuit is normal, go to the next step.

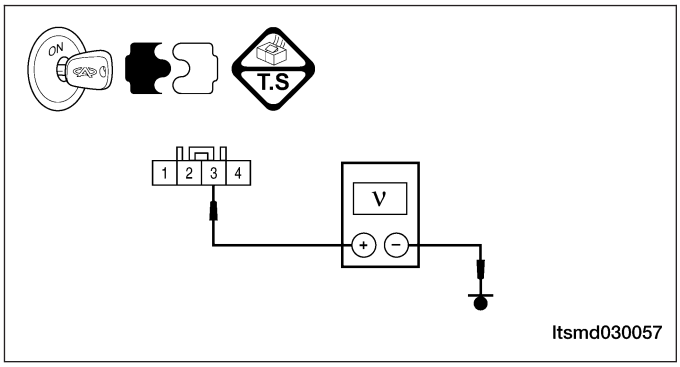

5. CHECK THE MAP SENSOR GROUND CIRCUIT FOR AN OPEN OR SHORT

- Turn ignition switch off.
- Disconnect ECM sensor harness connector E-001.
- Check for harness continuity between MAP sensor terminal 1 and ECM terminal 17.
- Continuity should exist.

Is the check result normal?

Yes >> Go to the next step.

No >> Repair or replace the circuit for an open or high resistance or short to power in harness or connectors.

6. CHECK THE MAP SENSOR OUTPUT SIGNAL CIRCUIT FOR OPEN OR SHORT

- Check for harness continuity between MAP sensor terminal 4 and ECM connector E-001, terminal 37.
- Continuity should exist.
- Check harness short to ground or short to power.

Is the check result normal?

Yes >> Go to the next step.

No >> Repair or replace the circuit for open or short to ground or short to power in harness or connectors.

Downloaded from www.Manualslib.com manuals search engine

7. CHECK THE MAP SENSOR SIGNAL

- Check MAP sensor signal between sensor terminal 4 and ground.

TERMINAL NO.	ITEM	CONDITION		DATA (DC VOLTAGE)
4	MAP sensor	Engine: Running	• Press accelerator pedal slowly.	Approximately 1.3 V
			• Press accelerator pedal quickly.	Up to approximately 4 V (instantaneous)

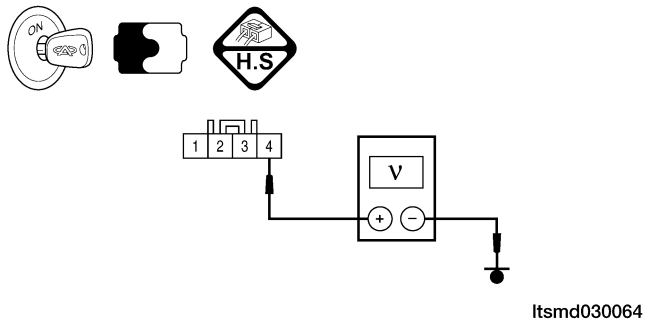

Is the check result normal?

Yes >> Go to step 9.

No >> Go to the next step.

8. CHECK AND REPLACE THE MAP SENSOR

- Check sensor as follow.
  - Remove the sensor.
  - Visually check and clean the pressure entrance of the sensor for chipping.

Is the check result normal?

Yes >> Replace the MAP sensor with a known good MAP sensor.
Select view DTC on the X-431 screen.
- If DTC P0107 or P0108 is not current present, the system is OK.
- If DTC P0107 or P0108 is current present, go to step 9.

No >> Clear or replace the MAP sensor.

9. CHECK DTC

- With the X-431 scan tool, read ECM DTCs.
- Refer to ″DTC Confirmation Procedure″.

Is DTC P0107 or P0108 still present?

Yes >> Replace the ECM.

NOTE : The Immobilizer control module must be matched to the new ECM (See ECM Removal & Installation in Section 03 Electronic Engine Controls).

No >> The system is now operating properly.
Reassemble the vehicle and road test to verify the customers complaint is repaired.

Downloaded from www.Manualslib.com manuals search engine

P0112 - Intake Air Temperature Circuit Low Input

EEC - 1.6L - MAP - 01

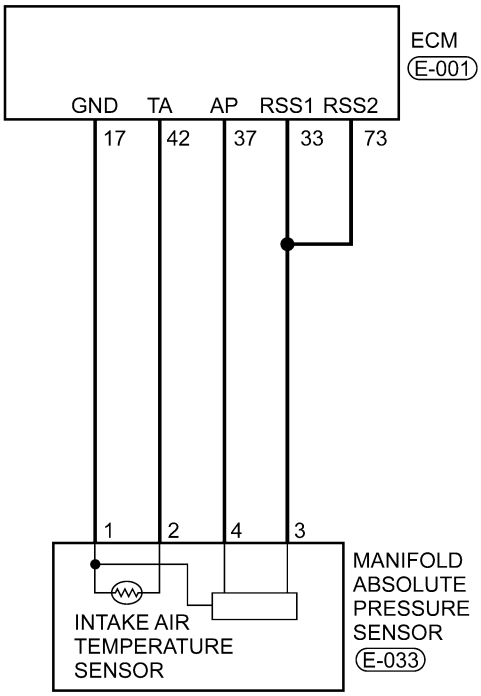

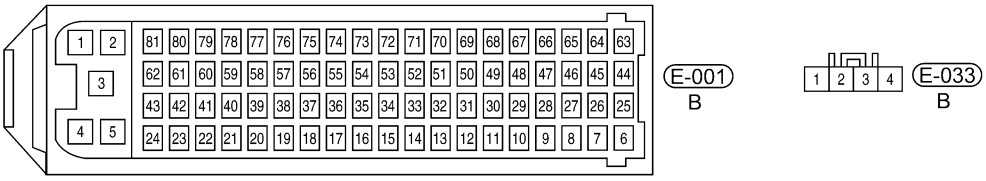

ltsmw030052t

Downloaded from www.Manualslib.com manuals search engine

EEC - 1.8L - MAF - 01

OE : WITHOUT EOBD
WE : WITH EOBD

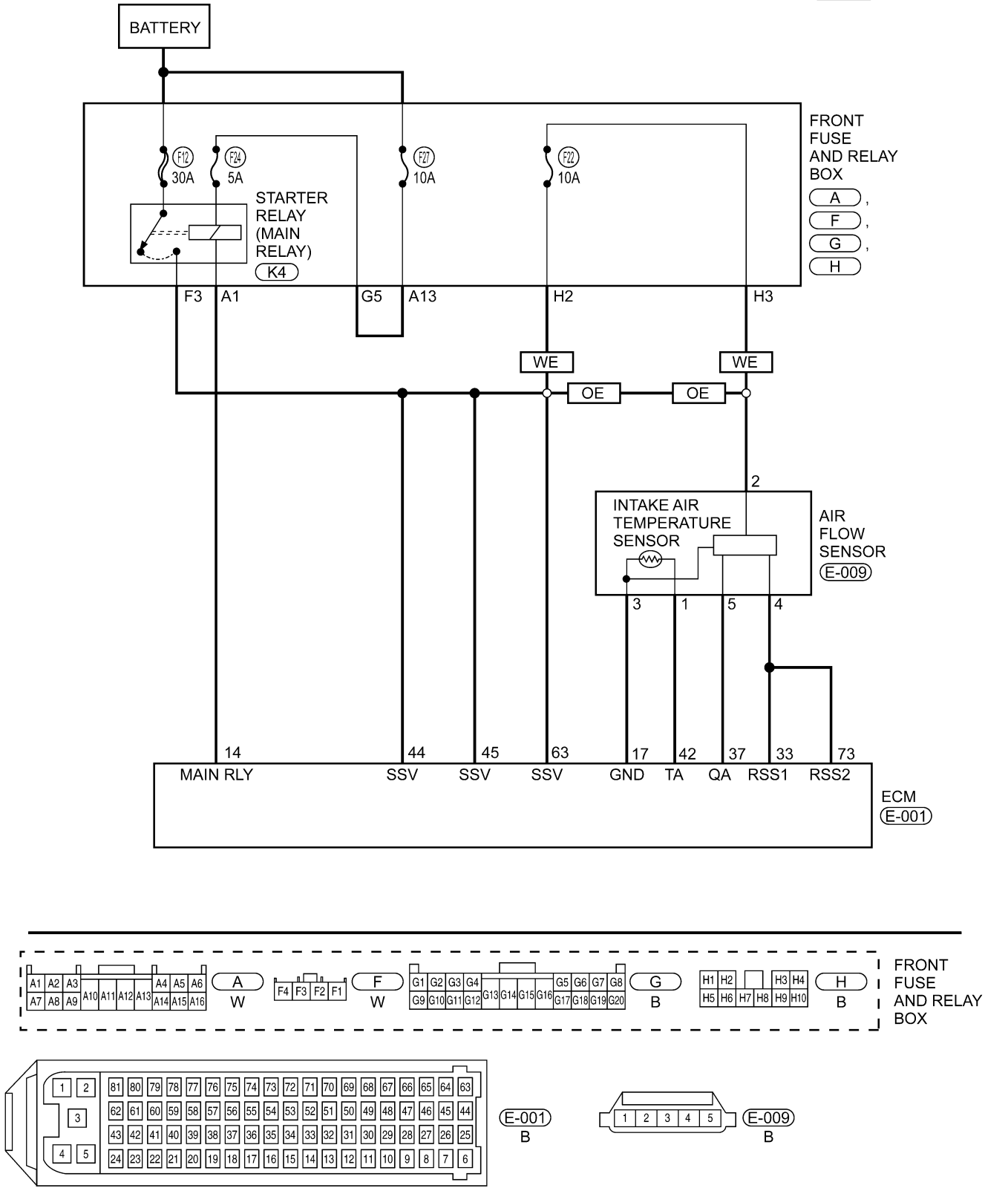

ltsmw030058t

Downloaded from www.Manualslib.com manuals search engine

Check reference values between ECM terminals and ground under the following conditions:

ECM TERMINAL NO.	ITEM	CONDITION		DATA (DC VOLTAGE)
17	Sensor (GND)	Ignition switch: ON		0 V
42	Intake Air Temperature (IAT) sensor	Ignition switch: ON	Intake Air Temperature (IAT): 36°C	1.88 V

On Board Diagnostic Logic

- Self-diagnosis detection logic.

DTC NO.	DTC DEFINITION	DTC DETECTION CONDITION	DTC SET CONDITION	POSSIBLE CAUSE
P0112	Intake Air Temperature (IAT) circuit low input	• Ignition switch: ON • Engine: Running	Output signal is wrong or out of acceptable range.	• IAT sensor • Harness or connectors • ECM

DTC Confirmation Procedure:

Before performing the following procedure, confirm that battery voltage is more than 12 V.

- Turn ignition switch off.
- Connect the X-431 scan tool to the Data Link Connector (DLC) - use the most current software available.
- Turn ignition switch on.
- With the scan tool, record and erase stored DTCs in the ECM.
- Start engine and warm it to normal operating temperature, then select view DTC and data stream.
- If the DTC is detected, the DTC condition is current. Go to Diagnostic Procedure - Step 1.
- If the DTC is not detected, the DTC condition is intermittent (See Diagnostic Help and Intermittent DTC Troubleshooting in Section 03 Electronic Engine Controls for more information.

NOTE :
While performing electrical diagnosis & testing, always refer to the electrical schematics for specific circuit and component information.

Diagnostic Procedure

1. CHECK GROUND CONNECTIONS

- Turn ignition switch off.
- Loosen and retighten ground screws on the body (See Ground Inspection in Section 03 Electronic Engine Controls).
- Inspect ground connections E-207 and E-208 mounting position (See Vehicle Wiring Harness Layout - Engine Room Harness (With 1.6L/1.8L Engine) in Section 16 Wiring).

Are the ground connections OK?

Yes >> For 1.8L engine go to next step.
For 1.6L engine go to Step 4.

No >> Repair or replace ground connections.

Downloaded from www.Manualslib.com manuals search engine

2. 1.8L ENGINE - CHECK INTAKE AIR TEMPERATURE (IAT) SENSOR ELECTRICAL CONNECTOR

- Disconnect the IAT sensor (1) (For 1.8L engine: IAT sensor is built-into MAF sensor) electrical connector.
- Inspect the electrical connector for damage.

Is the electrical connector OK?

Yes >> Go to the next step.

No >> Repair or replace the electrical connector as necessary.

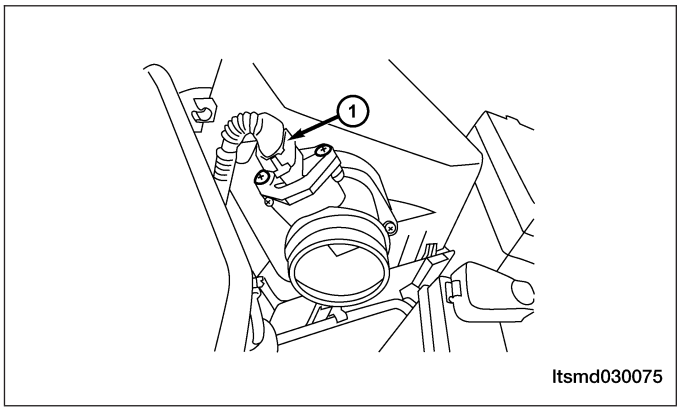

3. 1.8L ENGINE - CHECK THE INTAKE AIR TEMPERATURE (IAT) SENSOR SIGNAL CIRCUIT

- Turn ignition switch on.
- Check reference voltage between IAT sensor terminal 1 and ground in the IAT sensor electrical connector E-009.
- 5 V should exist.

Is the check result normal?

Yes >> Go to Step 6.

No >> Repair circuit for an open or short to power in harness or connectors.

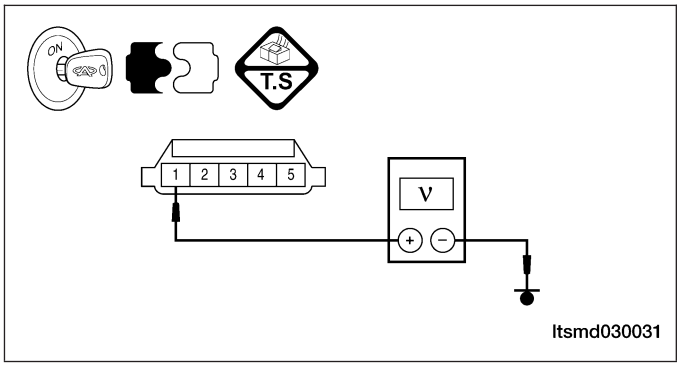

Downloaded from www.Manualslib.com manuals search engine

4. 1.6L ENGINE - CHECK MANIFOLD ABSOLUTE PRESSURE (MAP) SENSOR ELECTRICAL CONNECTOR

- Disconnect the MAP sensor (1) (For 1.6L engine: IAT sensor is built-into MAP sensor) electrical connector.
- Inspect the electrical connector for damage.

Is the electrical connector OK?

Yes >> Go to the next step.

No >> Repair or replace the electrical connector as necessary.

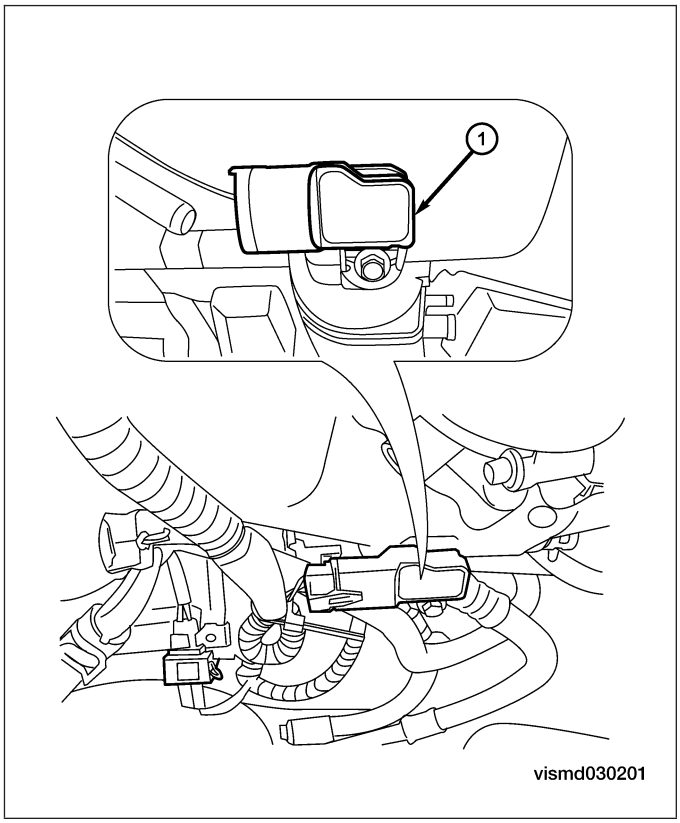

5. 1.6L ENGINE - CHECK THE INTAKE AIR TEMPERATURE (IAT) SENSOR SIGNAL CIRCUIT VOLTAGE

- Check supply voltage between IAT sensor terminal 2 and ground in the IAT sensor electrical connector E-033.
- 5 V should exist.

Is the check result normal?

Yes >> Go to the next step.

No >> Repair circuit for an open or short to power in harness or connectors.

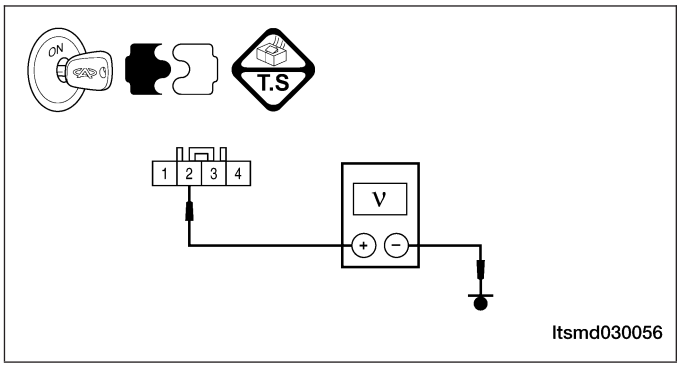

6. DETECT MALFUNCTIONING PART

- Turn ignition switch off.
- Disconnect ECM harness connector.
- Check harness for a short to ground between IAT connector terminal 1 and ECM connector E-001, terminal 42.

Is the check result normal?

Yes >> Go to the next step.

No >> Repair circuit for a short to ground in harness or connectors.

Downloaded from www.Manualslib.com manuals search engine

7. CHECK THE IAT SENSOR

- Connect IAT sensor connector.
- Connect ECM connector.
- Turn ignition switch on.
- Check signal between IAT sensor terminal 1 and ground under the following conditions:

IAT SENSOR TERMINAL NO.	ITEM	CONDITION		DATA (DC VOLTAGE)
1 (For 1.8L engine)	IAT sensor	Ignition switch: ON	IAT: 36°C	1.88 V
2 (For 1.6L engine)				

Is the check result normal?

Yes >> Go to the next step.

No >> Replace IAT sensor.

8. CHECK DTC

- With the X-431 scan tool, read ECM DTCs.
- Refer to ″DTC Confirmation Procedure″.

Is DTC P0112 still present?

Yes >> Replace the ECM.

NOTE : The Immobilizer control module must be matched to the new ECM (See ECM Removal & Installation in Section 03 Electronic Engine Controls).

No >> The system is now operating properly.
Reassemble the vehicle and road test to verify the customers complaint is repaired.

Downloaded from www.Manualslib.com manuals search engine

P0113 - Intake Air Temperature Circuit High Input

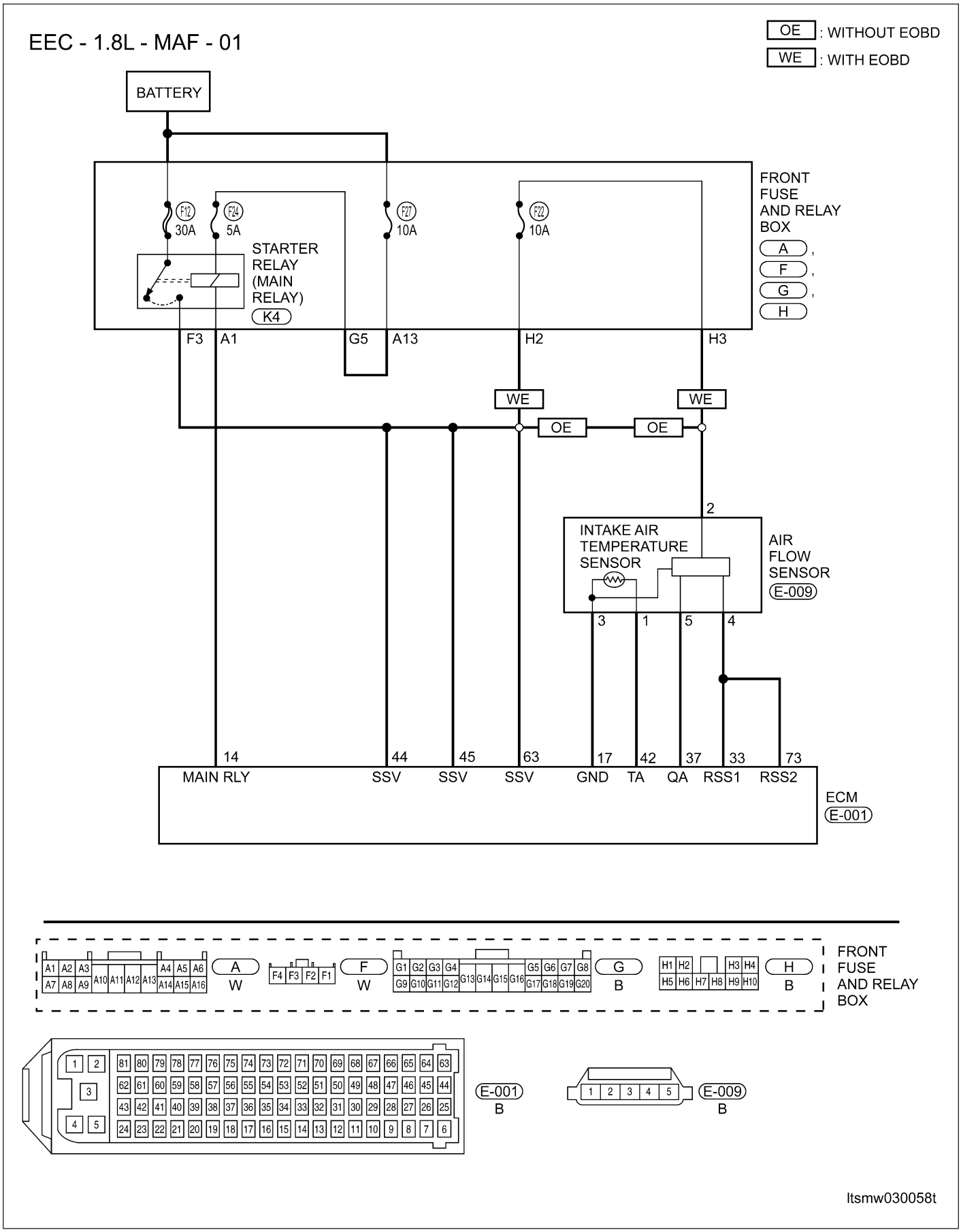

Downloaded from www.Manualslib.com manuals search engine

EEC - 1.6L - MAP - 01

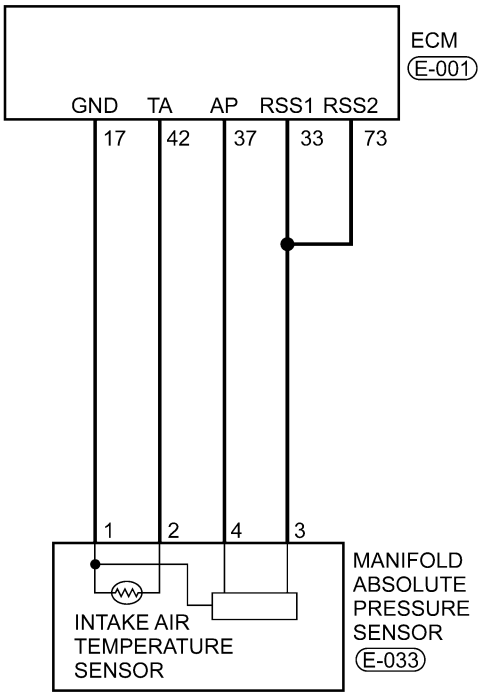

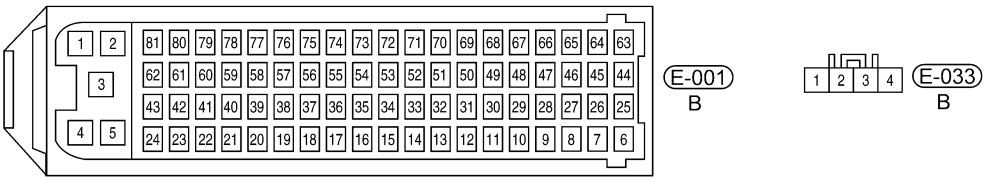

ltsmw030052t

Downloaded from www.Manualslib.com manuals search engine

Check reference values between ECM terminals and ground under the following conditions:

ECM TERMINAL NO.	ITEM	CONDITION		DATA (DC VOLTAGE)
17	Sensor (GND)	Ignition switch: ON		0 V
42	Intake Air Temperature (IAT) sensor	Ignition switch: ON	IAT: 36°C	Approximately 1.88 V

On Board Diagnostic Logic

- Self-diagnosis detection logic.

DTC NO.	DTC DEFINITION	DTC DETECTION CONDITION	SET CONDITION	POSSIBLE CAUSE
P0113	Intake Air Temperature (IAT) circuit high input	• Ignition switch: ON • Engine: Running	Output signal is wrong or out of acceptable range.	• IAT sensor • Harness or connectors • ECM

DTC Confirmation Procedure:

Before performing the following procedure, confirm that battery voltage is more than 12 V.

- Turn ignition switch off.
- Connect the X-431 scan tool to the Data Link Connector (DLC) - use the most current software available.
- Turn ignition switch on.
- With the scan tool, record and erase stored DTCs in the ECM.
- Start engine and warm it to normal operating temperature, then select view DTC and data stream.
- If the DTC is detected, the DTC condition is current. Go to Diagnostic Procedure - Step 1.
- If the DTC is not detected, the DTC condition is intermittent (See Diagnostic Help and Intermittent DTC Troubleshooting in Section 03 Electronic Engine Controls for more information.

NOTE :
While performing electrical diagnosis & testing, always refer to the electrical schematics for specific circuit and component information.

Diagnostic Procedure

1. CHECK GROUND CONNECTIONS

- Turn ignition switch off.
- Loosen and retighten ground screws on the body (See Ground Inspection in Section 03 Electronic Engine Controls).
- Inspect ground connections E-207 and E-208 mounting position (See Vehicle Wiring Harness Layout - Engine Room Harness (With 1.6L/1.8L Engine) in Section 16 Wiring).

Are the ground connections OK?

Yes >> For 1.8L engine go to next step.
For 1.6L engine go to Step 4.

No >> Repair or replace ground connections.

Downloaded from www.Manualslib.com manuals search engine

2. 1.8L ENGINE - CHECK INTAKE AIR TEMPERATURE (IAT) SENSOR ELECTRICAL CONNECTOR

- Disconnect the IAT sensor (1) (For 1.8L engine: IAT sensor is built-into MAF sensor) electrical connector.
- Inspect the electrical connector for damage.

Is the electrical connector OK?

Yes >> Go to the next step.

No >> Repair or replace the electrical connector as necessary.

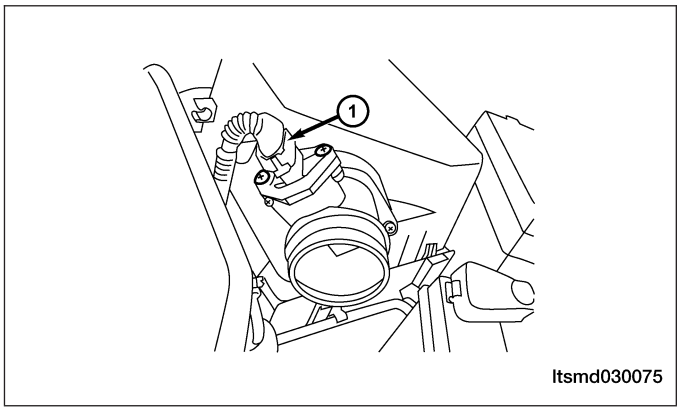

3. 1.8L ENGINE - CHECK THE INTAKE AIR TEMPERATURE (IAT) SENSOR SIGNAL CIRCUIT

- Turn ignition switch on.
- Check supply voltage between IAT sensor terminal 1 and ground in the IAT sensor electrical connector E-009.
- 5 V should exist.

Is the check result normal?

Yes >> Go to Step 6.

No >> Repair circuit for an open or short to power in harness or connectors.

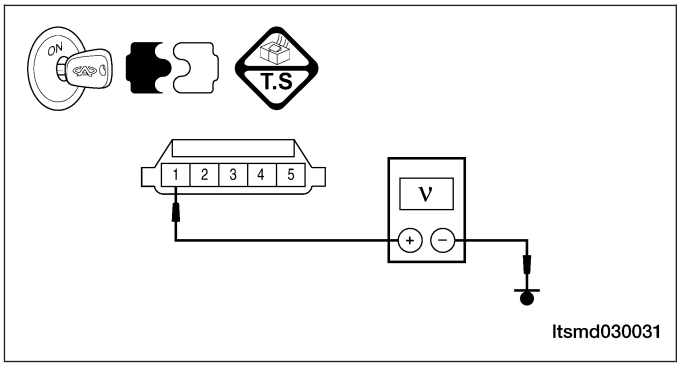

Downloaded from www.Manualslib.com manuals search engine

4. 1.6L ENGINE - CHECK MANIFOLD ABSOLUTE PRESSURE (MAP) SENSOR ELECTRICAL CONNECTOR

- Disconnect the MAP sensor (1) (For 1.6L engine: IAT sensor is built-into MAP sensor) electrical connector.
- Inspect the electrical connector for damage.

Is the electrical connector OK?

Yes >> Go to the next step.

No >> Repair or replace the electrical connector as necessary.

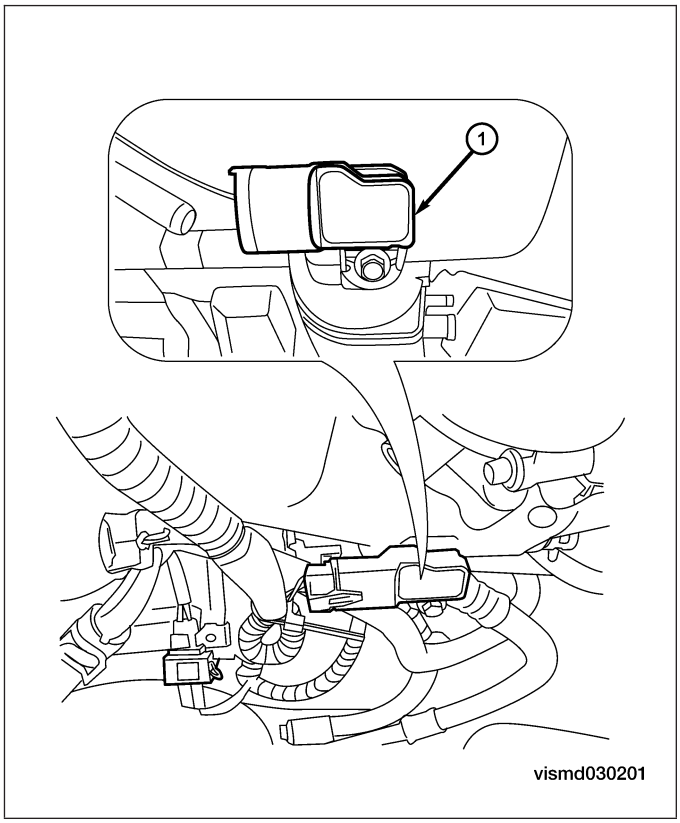

5. 1.6L ENGINE - CHECK THE INTAKE AIR TEMPERATURE (IAT) SENSOR SIGNAL CIRCUIT

- Check supply voltage between IAT sensor terminal 2 and ground in the IAT sensor electrical connector E-033.
- 5 V should exist.

Is the check result normal?

Yes >> Go to the next step.

No >> Repair circuit for an open or short to power in harness or connectors.

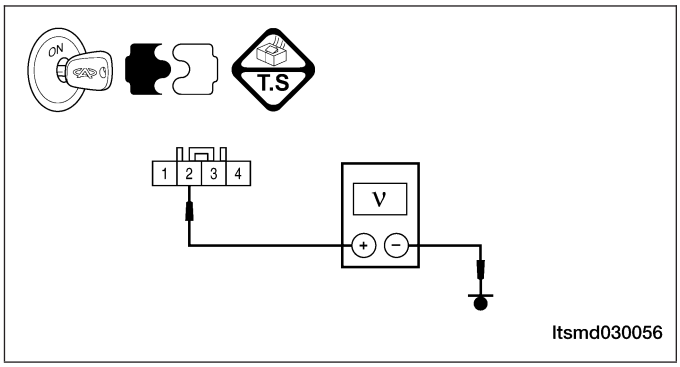

Downloaded from www.Manualslib.com manuals search engine

6. CHECK THE IAT SENSOR GROUND CIRCUIT FOR OPEN OR SHORT

- Turn ignition switch off.
- Disconnect ECM harness connector.
- Check for harness continuity between following terminals.
- For 1.6L engine, check continuity between IAT sensor terminal 1 and ECM terminal 17.

IAT SENSOR CONNECTOR TERMINAL	ECM CONNECTOR TERMINAL	
1	17	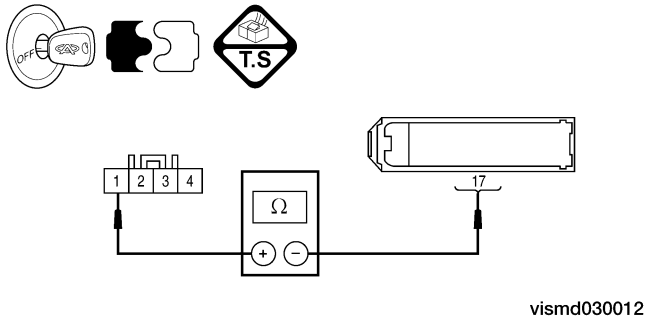

- For 1.8L engine, check continuity between IAT sensor terminal 3 and ECM terminal 17.

IAT SENSOR CONNECTOR TERMINAL	ECM CONNECTOR TERMINAL	
3	17	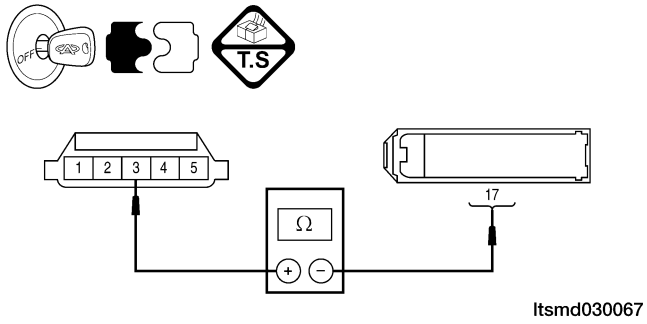

- Continuity should exist.
- Check harness for short to power.

Is the check result normal?

Yes >> Go to the next step.

No >> Repair circuit for an open or short to power in harness or connectors.

Downloaded from www.Manualslib.com manuals search engine

7. CHECK THE IAT SENSOR

- Connect IAT sensor connector.
- Connect ECM connector.
- Turn ignition switch on.
- Check signal between the IAT sensor terminal 1 and ground under the following conditions:

TERMINAL NO.	ITEM	CONDITION		DATA (DC VOLTAGE)
42	IAT sensor	Ignition switch: ON	IAT: 78°C	Approximately 1.88 V

Is the check result normal?

Yes >> Go to the next step.

No >> Replace the IAT sensor.

8. CHECK DTC

- With the X-431 scan tool, read ECM DTCs.
- Refer to ″DTC Confirmation Procedure″.

Is DTC P0113 still present?

Yes >> Replace the ECM.

NOTE : The Immobilizer control module must be matched to the new ECM (See ECM Removal & Installation in Section 03 Electronic Engine Controls).

No >> The system is now operating properly.
Reassemble the vehicle and road test to verify the customers complaint is repaired.

Downloaded from www.Manualslib.com manuals search engine

P0117 - Engine Coolant Temperature Circuit Low Input

EEC - 1.6L - 1.8L - ECT - 01

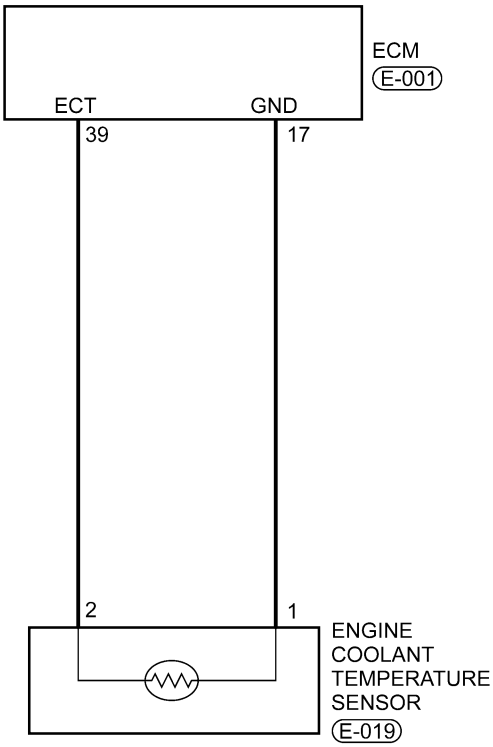

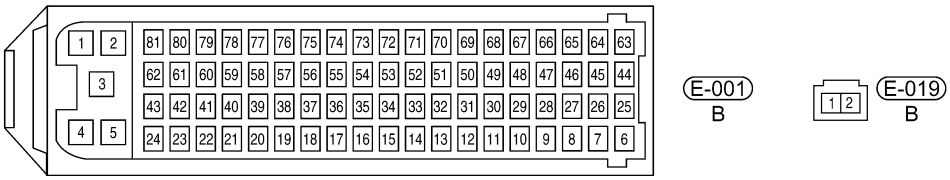

ltsmw030053t

Downloaded from www.Manualslib.com manuals search engine

Check reference values between ECM terminals and ground under the following conditions:

ECM TERMINAL NO.	ITEM	CONDITION		DATA (DC VOLTAGE)
17	Sensor (GND)	Ignition switch: ON	-	Approximately 0 V
39	Engine Coolant Temperature (ECT) sensor		ECT: 59°C	1.89 V
			ECT: 78°C	1.25 V
			ECT: 90°C	0.94 V

On Board Diagnostic Logic

- Self-diagnosis detection logic.

DTC NO.	DTC DEFINITION	DTC DETECTION CONDITION	DTC SET CONDITION	POSSIBLE CAUSE
P0117	Engine Coolant Temperature (ECT) circuit low input	Ignition switch on or after engine start	Signal output is below minimum acceptable range for a few seconds continuously.	• ECT sensor • Harness or connectors • ECM

DTC Confirmation Procedure:

Before performing the following procedure, confirm that battery voltage is more than 12 V.

- Turn ignition switch off.
- Connect the X-431 scan tool to the Data Link Connector (DLC) - use the most current software available.
- Turn ignition switch on.
- With the scan tool, record and erase stored DTCs in the ECM.
- Start engine and warm it to normal operating temperature, then select view DTC and data stream.
- If the DTC is detected, the DTC condition is current. Go to Diagnostic Procedure - Step 1.
- If the DTC is not detected, the DTC condition is intermittent (See Diagnostic Help and Intermittent DTC Troubleshooting in Section 03 Electronic Engine Controls for more information.

NOTE :

- Before performing this DTC diagnostic procedure, verify that the engine coolant temperature is normal.

NOTE :

While performing electrical diagnosis & testing, always refer to the electrical schematics for specific circuit and component information.

Downloaded from www.Manualslib.com manuals search engine

Diagnostic Procedure

1. CHECK GROUND CONNECTIONS

- Turn ignition switch off.
- Loosen and retighten ground screws on the body (See Ground Inspection in Section 03 Electronic Engine Controls).
- Inspect ground connections E-207 and E-208 mounting position (See Vehicle Wiring Harness Layout - Engine Room Harness (With 1.6L/1.8L Engine) in Section 16 Wiring).

Are the ground connections OK?

Yes >> Go to the next step.

No >> Repair or replace ground connections.

2. CHECK ECT SENSOR ELECTRICAL CONNECTOR

- Disconnect the ECT sensor (1) electrical connector.
- Inspect the electrical connector for damage.

Is the electrical connector OK?

Yes >> Go to the next step.

No >> Repair or replace the electrical connector as necessary.

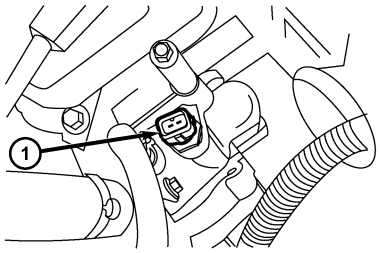

besm030019

3. CHECK THE ENGINE COOLANT TEMPERATURE (ECT) SENSOR SIGNAL CIRCUIT FOR A SHORT

- Turn ignition switch on.
- Check ECT sensor reference voltage between sensor terminal 2 and ground in the sensor electrical connector E-019.
- 5 V should exist.

Is the check result normal?

Yes >> Go to step 5.

No >> Go to the next step.

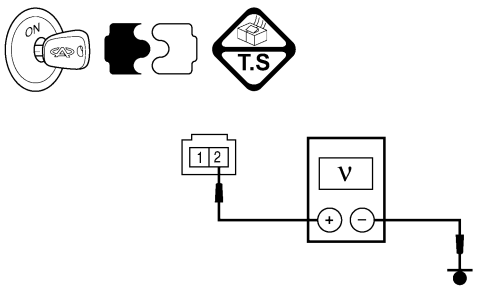

ltsmd030032

Downloaded from www.Manualslib.com manuals search engine

4. DETECT MALFUNCTIONING PART

- Turn ignition switch off.
- Disconnect ECM harness connector.
- Check harness for short to ground between ECT sensor connector terminal 2 and ECM connector terminal 39.

Is the check result normal?

Yes >> Replace the ECM.

NOTE : The Immobilizer control module must be matched to the new ECM (See ECM Removal & Installation in Section 03 Electronic Engine Controls).

No >> Repair or replace circuit for a short to ground in harness or connectors.

5. CHECK THE ECT SENSOR

- Check the resistance between ECT sensor terminal 1 and 2, component side.

ECT°C	RESISTANCE KΩ
-10°C	8.62 - 10.28
20°C	2.37 - 2.63
80°C	0.299 - 0.345

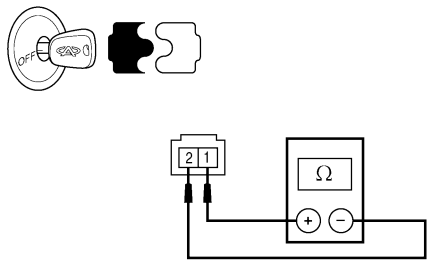

ltsmd030034

- Connect the ECT sensor connector.
- Connect the ECM connector.
- Turn ignition switch on.
- Check ECT sensor signal output.

ECT TERMINAL NO.	ITEM	CONDITION		DATA (DC VOLTAGE)
39	ECT sensor	Ignition switch on	ECT: 59°C	1.89 V
			ECT: 78°C	1.25 V
			ECT: 90°C	0.94 V
17	Sensor (GND)		-	Approximately 0 V

Is the check result normal?

Yes >> Go to the next step.

No >> Replace ECT sensor.

Downloaded from www.Manualslib.com manuals search engine

6. CHECK DTC

- With the X-431 scan tool, read ECM DTCs.
- Refer to ″DTC Confirmation Procedure″.

Is DTC P0117 still present?

Yes >> Replace the ECM.

NOTE : The Immobilizer control module must be matched to the new ECM (See ECM Removal & Installation in Section 03 Electronic Engine Controls).

No >> The system is now operating properly.
Reassemble the vehicle and road test to verify the customers complaint is repaired.

Downloaded from www.Manualslib.com manuals search engine

P0118 - Engine Coolant Temperature Circuit High Input

EEC - 1.6L - 1.8L - ECT - 01

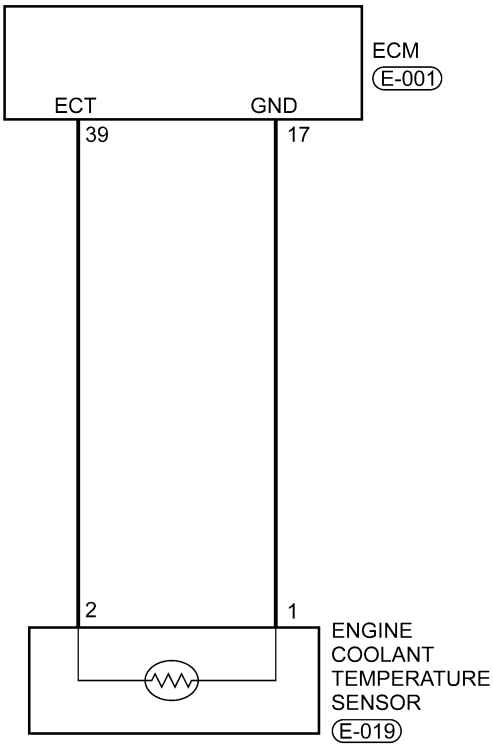

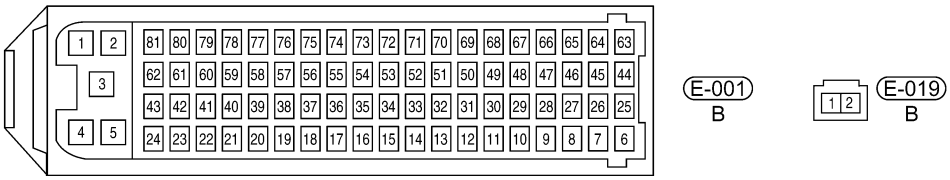

ltsmw030053t

Downloaded from www.Manualslib.com manuals search engine

Check reference values between ECM terminals and ground under the following conditions:

ECM TERMINAL NO.	ITEM	CONDITION		DATA (DC VOLTAGE)
17	Sensor (GND)	Ignition switch on	-	Approximately 0 V
39	Engine Coolant Temperature (ECT) sensor		ECT: 59°C	Approximately 1.89 V
			ECT: 78°C	Approximately 1.25 V
			ECT: 90°C	Approximately 0.94 V

On Board Diagnostic Logic

- Self-diagnosis detection logic.

DTC NO.	DTC DEFINITION	DTC DETECTION CONDITION	DTC SET CONDITION	POSSIBLE CAUSE
P0118	Engine coolant temperature circuit high input	• Ignition switch: ON • Engine: Running	Signal output is above maximum acceptable range for a few seconds continuously.	• ECT • Harness or connectors (The sensor circuit is open or shorted) • ECM

DTC Confirmation Procedure:

Before performing the following procedure, confirm that battery voltage is more than 12 V.

- Turn ignition switch off.
- Connect the X-431 scan tool to the Data Link Connector (DLC) - use the most current software available.
- Turn ignition switch on.
- With the scan tool, record and erase stored DTCs in the ECM.
- Start engine and warm it to normal operating temperature, then select view DTC and data stream.
- If the DTC is detected, the DTC condition is current. Go to Diagnostic Procedure - Step 1.
- If the DTC is not detected, the DTC condition is intermittent (See Diagnostic Help and Intermittent DTC Troubleshooting in Section 03 Electronic Engine Controls for more information.

NOTE :

- Before performing this DTC diagnostic procedure, verify that the Engine coolant temperature is normal.

NOTE :

While performing electrical diagnosis & testing, always refer to the electrical schematics for specific circuit and component information.

Diagnostic Procedure

1. CHECK GROUND CONNECTIONS

- Turn ignition switch off.
- Loosen and retighten ground screws on the body (See Ground Inspection in Section 03 Electronic Engine Controls).
- Inspect ground connections E-207 and E-208 mounting position (See Vehicle Wiring Harness Layout - Engine Room Harness (With 1.6L/1.8L Engine) in Section 16 Wiring).

Are the ground connections OK?

Yes >> Go to the next step.

No >> Repair or replace ground connections.

Downloaded from www.Manualslib.com manuals search engine

2. CHECK ECT SENSOR ELECTRICAL CONNECTOR

- Disconnect the ECT sensor (1) electrical connector.
- Inspect the electrical connector for damage.

Is the electrical connector OK?

Yes >> Go to the next step.

No >> Repair or replace the electrical connector as necessary.

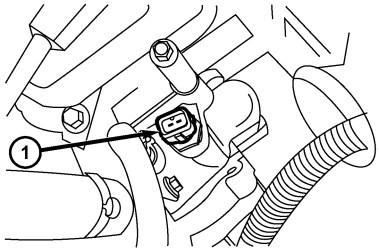

besm030019

3. CHECK THE ENGINE COOLANT TEMPERATURE SENSOR SIGNAL CIRCUIT FOR AN OPEN AND SHORT

- Turn ignition switch on.
- Check ECT sensor reference voltage between sensor terminal 2 and ground in the sensor electrical connector E-019.
- 5 V should exist.

Is the check result normal?

Yes >> Go to the next step.

No >> Repair or replace harness for an open or short to power between ECT connector terminal 2 and ECM connector E-001, terminal 39.
If harness is normal, replace the ECM.

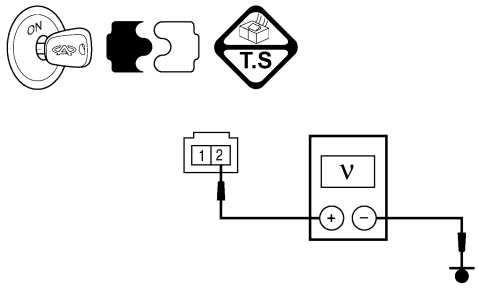

ltsmd030032

NOTE : The Immobilizer control module must be matched to the new ECM (See ECM Removal & Installation in Section 03 Electronic Engine Controls).

4. CHECK ECT SENSOR GROUND CIRCUIT FOR AN OPEN AND SHORT TO POWER

- Check harness continuity between following terminals.

ECT SENSOR CONNECTOR TERMINAL	ECM CONNECTOR TERMINAL	CONTINUITY
1	17	Yes

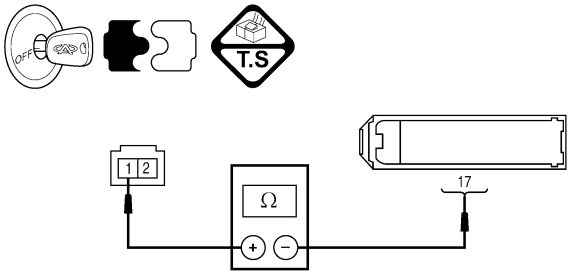

ltsmd030033

Downloaded from www.Manualslib.com manuals search engine

- Continuity should exist.
- Check the ECT ground circuit for an open.
- Check harness for short to power.

Is the check result normal?

Yes >> Go to the next step.

No >> Repair circuit for an open or short to power in harness or connectors.

5. CHECK ECT SENSOR

- Check the resistance between ECT sensor terminal 1 and 2, component side.

ECT°C	RESISTANCE KΩ
-10°C	8.62 - 10.28
20°C	2.37 - 2.63
80°C	0.299 - 0.345

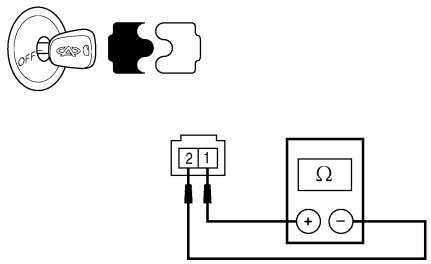

ltsmd030034

- Connect ECT sensor connector.
- Connect ECM connector.
- Turn ignition switch on.
- Check ECT sensor signal output.

ECT TERMINAL NO.	ITEM	CONDITION		DATA (DC VOLTAGE)
39	ECT sensor	Ignition switch on	ECT: 59°C	1.89 V
			ECT: 78°C	1.25 V
			ECT: 90°C	0.94 V
17	Sensor (GND)		-	Approximately 0 V

Is the check result normal?

Yes >> Go to the next step.

No >> Replace ECT sensor.

Downloaded from www.Manualslib.com manuals search engine

6. CHECK DTC

- With the X-431 scan tool, read ECM DTCs.
- Refer to ″DTC Confirmation Procedure″.

Is DTC P0118 still present?

Yes >> Replace the ECM.

NOTE : The Immobilizer control module must be matched to the new ECM (See ECM Removal & Installation in Section 03 Electronic Engine Controls).

No >> The system is now operating properly.
Reassemble the vehicle and road test to verify the customers complaint is repaired.

Downloaded from www.Manualslib.com manuals search engine

P0122 - Throttle Position Sensor A Circuit Low Input

EEC - 1.6L - 1.8L - TPS - 01

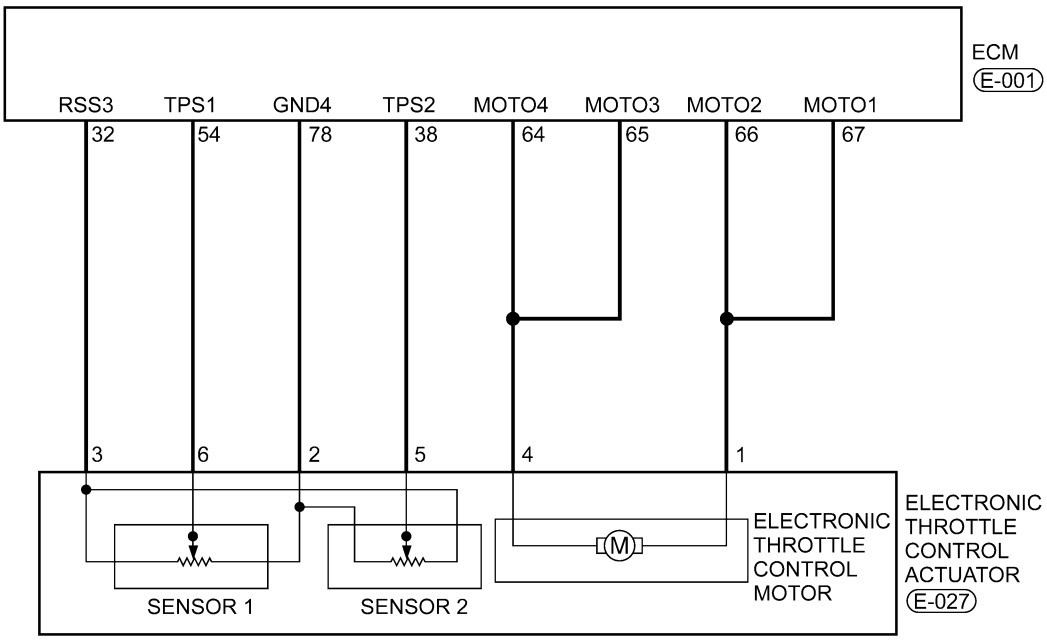

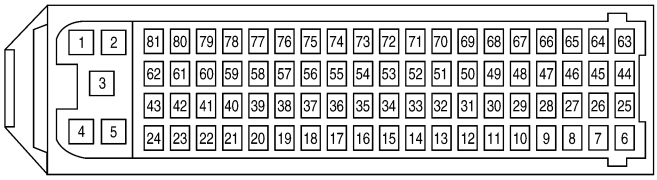

E-001
B

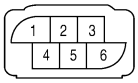

E-027
B

ltsmw030044t

Downloaded from www.Manualslib.com manuals search engine

Check reference values between ECM terminals and ground under the following conditions:

ECM TERMINAL NO.	ITEM	CONDITION		DATA (DC VOLTAGE)
32	Regulated sensor supply	Ignition switch: ON	-	Approximately 5 V
38	Electronic throttle control actuator (Position sensor)		• Engine stopped • Accelerator pedal: Fully released	4.24 V
			• Engine stopped • Accelerator pedal: Fully depressed	0.72 V
54	Electronic throttle control actuator		• Engine stopped • Accelerator pedal: Fully released	0.74 V
			• Engine stopped • Accelerator pedal: Fully depressed	4.62 V
64	Motor 4		-	12 V or 0 V
65	Motor 3			
66	Motor 2			12 V or 0 V
67	Motor 1			
78	Sensor (GND)			Approximately 0 V

On Board Diagnostic Logic

- Self-diagnosis detection logic.

DTC NO.	DTC DEFINITION	DTC DETECTION CONDITION	DTC SET CONDITION	POSSIBLE CAUSE
P0122	Throttle Position Sensor (TPS) A circuit low input	• Ignition switch: ON • Engine: Running	Signal output is below minimum acceptable range for a few seconds continuously.	• Throttle Position Sensor (TPS) or misalignment • Harness or connectors (Signal circuit is open or shorted) • ECM

DTC Confirmation Procedure:

Before performing the following procedure, confirm that battery voltage is more than 12 V.

- Turn ignition switch off.
- Connect the X-431 scan tool to the Data Link Connector (DLC) - use the most current software available.
- Turn ignition switch on.
- With the scan tool, record and erase stored DTCs in the ECM.
- Start engine and warm it to normal operating temperature, then select view DTC and data stream.
- If the DTC is detected, the DTC condition is current. Go to Diagnostic Procedure - Step 1.
- If the DTC is not detected, the DTC condition is intermittent (See Diagnostic Help and Intermittent DTC Troubleshooting in Section 03 Electronic Engine Controls for more information.

NOTE :

While performing electrical diagnosis & testing, always refer to the electrical schematics for specific circuit and component information.

Downloaded from www.Manualslib.com manuals search engine

Diagnostic Procedure

1. CHECK GROUND CONNECTIONS

- Turn ignition switch off.
- Loosen and retighten ground screws on the body (See Ground Inspection in Section 03 Electronic Engine Controls).
- Inspect ground connections E-207 and E-208 mounting position (See Vehicle Wiring Harness Layout - Engine Room Harness (With 1.6L/1.8L Engine) in Section 16 Wiring).

Are the ground connections OK?

Yes >> Go to the next step.

No >> Repair or replace ground connections.

2. CHECK TPS ELECTRICAL CONNECTOR

- Disconnect the TPS (1) electrical connector.
- Inspect the electrical connector for damage.

Is the electrical connector OK?

Yes >> Go to the next step.

No >> Repair or replace the electrical connector as necessary.

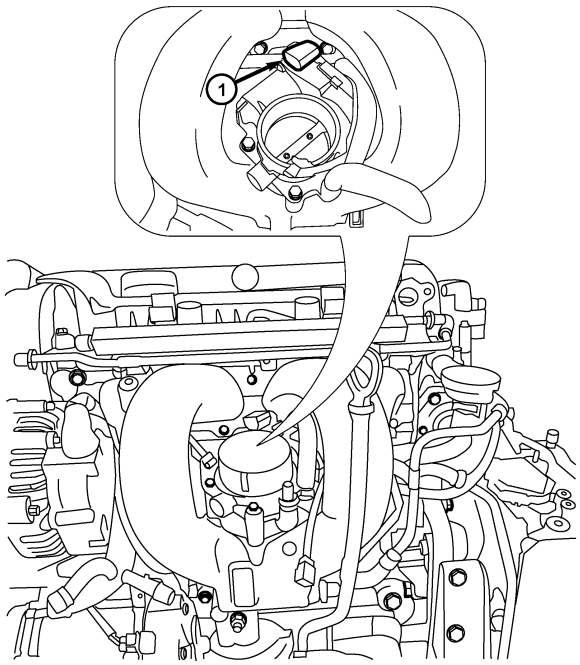

vismd030203

Downloaded from www.Manualslib.com manuals search engine

3. CHECK THE THROTTLE POSITION SENSOR (TPS) POWER SUPPLY CIRCUIT

- Turn ignition switch on.
- Check supply voltage between the TPS terminal 3 and ground in the sensor electrical connector E-027.
- 5 V should exist.

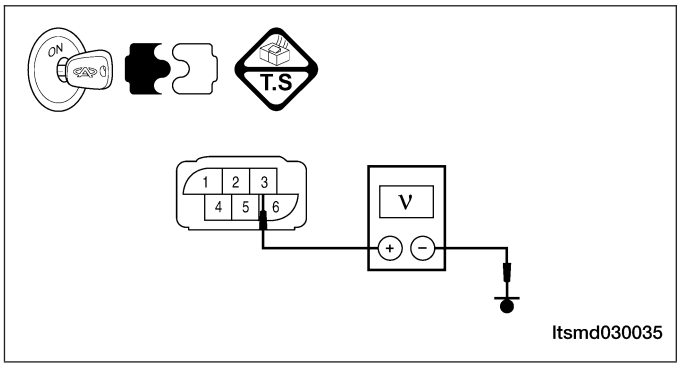

Is the check result normal?

Yes >> Go to the next step.

No >> Repair circuit for an open or short to ground in harness or connectors.
If harness is normal, replace the ECM.

NOTE : The Immobilizer control module must be matched to the new ECM (See ECM Removal & Installation in Section 03 Electronic Engine Controls).

4. CHECK TPS SIGNAL CIRCUIT FOR AN OPEN OR SHORT

- Turn ignition switch off.
- Disconnect ECM harness connector.
- Check harness continuity between following terminals.

TPS SENSOR CONNECTOR TERMINAL	ECM CONNECTOR TERMINAL
3	32

- Continuity should exist.
- Check TPS signal circuit
- Check harness for a short to power.

Is the check result normal?

Yes >> Go to step 6.

No >> Go to the next step.

5. DETECT MALFUNCTIONING PART

- Check harness for an open or short to ground between TPS connector terminal 2 and ECM connector E-001, terminal 78.

Is the check result normal?

Yes >> Go to the next step.

No >> Repair or replace harness or connectors.

Downloaded from www.Manualslib.com manuals search engine

6. CHECK THE TPS RESISTANCE

- Check resistance between TPS terminal 2 and terminal 3.
- 2 kΩ ± 20 % (20°C) should exist.
- Also check the resistance between TPS terminal 6 and terminal 2 while turn the throttle.
- The resistance should linear change.

Is the check result normal?

Yes >> Go to the next step.

No >> Replace the TPS.
Perform the TPS self-learning.

7. CHECK THE TPS SIGNAL

- Turn ignition switch off.
- Connect ECM connector.
- Connect TPS connector.
- Turn ignition switch on.
- Check voltage between TPS terminal 3 and ground under the following conditions:

ECM TERMINAL NO.	ITEM	CONDITION		DATA (DC VOLTAGE)
32	Regulated sensor supply	Ignition switch: ON	-	Approximately 5 V
38	Electronic throttle control actuator (Position sensor)		• Engine stopped • Accelerator pedal: Fully released	4.24 V
			• Engine stopped • Accelerator pedal: Fully depressed	0.72 V
54	Electronic throttle control actuator		• Engine stopped • Accelerator pedal: Fully released	0.74 V
			• Engine stopped • Accelerator pedal: Fully depressed	4.62 V
78	Sensor (GND)		-	Approximately 0 V
64	Motor 4			12 V or 0 V
65	Motor 3			
66	Motor 2			12 V or 0 V
67	Motor 1			

Is the check result normal?

Yes >> Go to the next step.

No >> Replace the TPS.
Perform the TPS self-learning.

Downloaded from www.Manualslib.com manuals search engine

8. CHECK DTC

- With the X-431 scan tool, read ECM DTCs.
- Refer to ″DTC Confirmation Procedure″.

Is DTC P0122 still present?

Yes >> Replace the ECM.

NOTE : The Immobilizer control module must be matched to the new ECM (See ECM Removal & Installation in Section 03 Electronic Engine Controls).

No >> The system is now operating properly.
Reassemble the vehicle and road test to verify the customers complaint is repaired.

Downloaded from www.Manualslib.com manuals search engine

P0123 - Throttle Position Sensor A Circuit High Input

EEC - 1.6L - 1.8L - TPS - 01

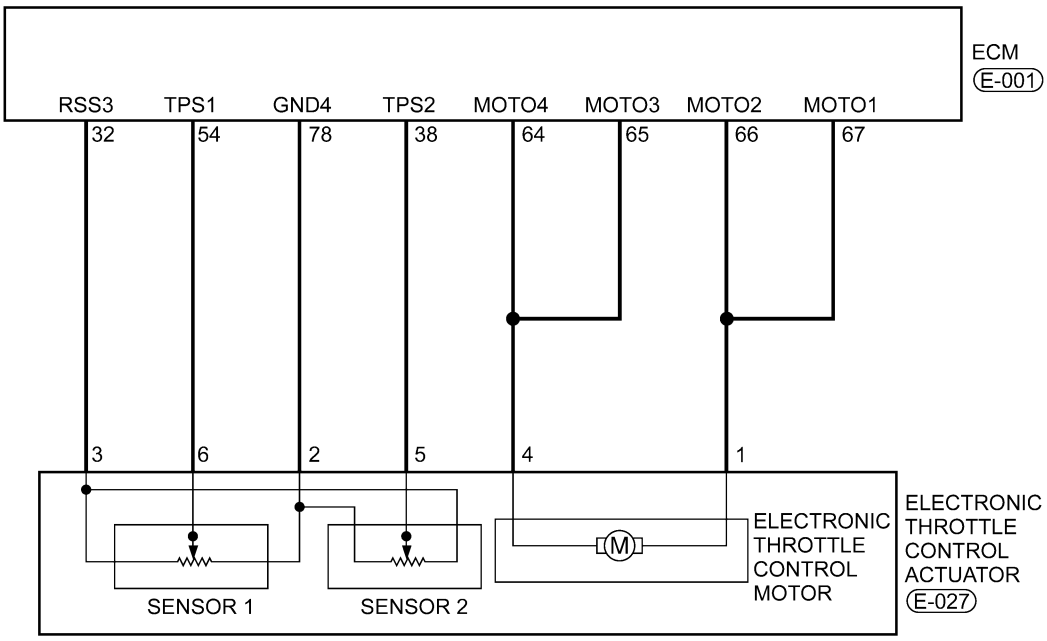

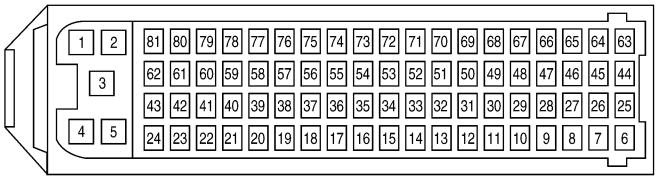

E-001
B

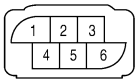

E-027
B

ltsmw030044t

Downloaded from www.Manualslib.com manuals search engine

Check reference values between ECM terminals and ground under the following conditions:

ECM TERMINAL NO.	ITEM	CONDITION		DATA (DC VOLTAGE)
32	Regulated sensor supply	Ignition switch: ON	-	Approximately 5 V
38	Electronic throttle control actuator (Position sensor)		• Engine stopped • Accelerator pedal: Fully released	4.24 V
			• Engine stopped • Accelerator pedal: Fully depressed	0.72 V
54	Electronic throttle control actuator		• Engine stopped • Accelerator pedal: Fully released	0.74 V
			• Engine stopped • Accelerator pedal: Fully depressed	4.62 V
78	Sensor (GND)		-	Approximately 0 V
64	Motor 4			12 V or 0 V
65	Motor 3			
66	Motor 2			12 V or 0 V
67	Motor 1			

On Board Diagnostic Logic

- Self-diagnosis detection logic.

DTC NO.	DTC DEFINITION	DTC DETECTION CONDITION	DTC SET CONDITION	POSSIBLE CAUSE
P0123	TPS A circuit high input	• Ignition switch: ON • Engine: Running	Signal output is above maximum acceptable range for a few seconds continuously.	• Throttle Position Sensor (TPS) or misalignment • Harness or connectors (The sensor signal circuit is open or shorted) • ECM

DTC Confirmation Procedure:

Before performing the following procedure, confirm that battery voltage is more than 12 V.

- Turn ignition switch off.
- Connect the X-431 scan tool to the Data Link Connector (DLC) - use the most current software available.
- Turn ignition switch on.
- With the scan tool, record and erase stored DTCs in the ECM.
- Start engine and warm it to normal operating temperature, then select view DTC and data stream.
- If the DTC is detected, the DTC condition is current. Go to Diagnostic Procedure - Step 1.
- If the DTC is not detected, the DTC condition is intermittent (See Diagnostic Help and Intermittent DTC Troubleshooting in Section 03 Electronic Engine Controls for more information.

NOTE :

While performing electrical diagnosis & testing, always refer to the electrical schematics for specific circuit and component information.

Downloaded from www.Manualslib.com manuals search engine

Diagnostic Procedure

1. CHECK GROUND CONNECTIONS

- Turn ignition switch off.
- Loosen and retighten ground screws on the body (See Ground Inspection in Section 03 Electronic Engine Controls).
- Inspect ground connections E-207 and E-208 mounting position (See Vehicle Wiring Harness Layout - Engine Room Harness (With 1.6L/1.8L Engine) in Section 16 Wiring).

Are the ground connections OK?

Yes >> Go to the next step.

No >> Repair or replace ground connections.

2. CHECK TPS ELECTRICAL CONNECTOR

- Disconnect the TPS (1) electrical connector.
- Inspect the electrical connector for damage.

Is the electrical connector OK?

Yes >> Go to the next step.

No >> Repair or replace the electrical connector as necessary.

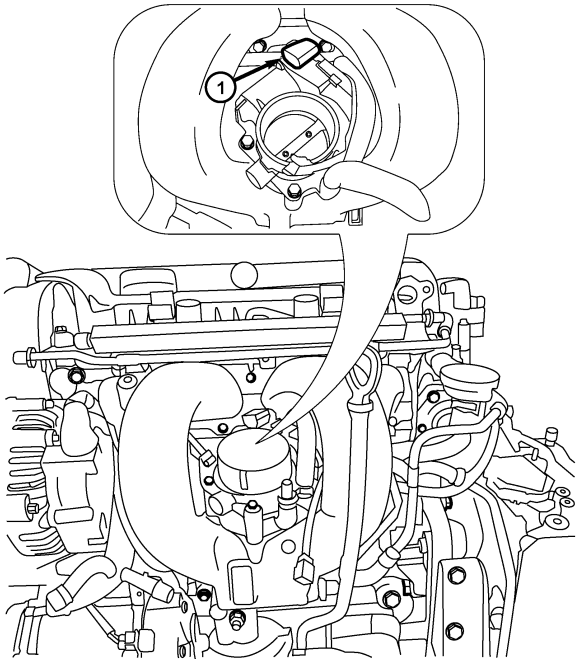

vismd030203

Downloaded from www.Manualslib.com manuals search engine

3. CHECK THE THROTTLE POSITION SENSOR (TPS) POWER SUPPLY CIRCUIT

- Turn ignition switch on.
- Check supply voltage between TPS terminal 3 and ground in the TPS electrical connector E-027.
- 5 V should exist.

Is the check result normal?

Yes >> Go to the next step.

No >> Repair short to power in harness or connectors.
If circuit is normal, replace the ECM.

NOTE : The Immobilizer control module must be matched to the new ECM (See ECM Removal & Installation in Section 03 Electronic Engine Controls).

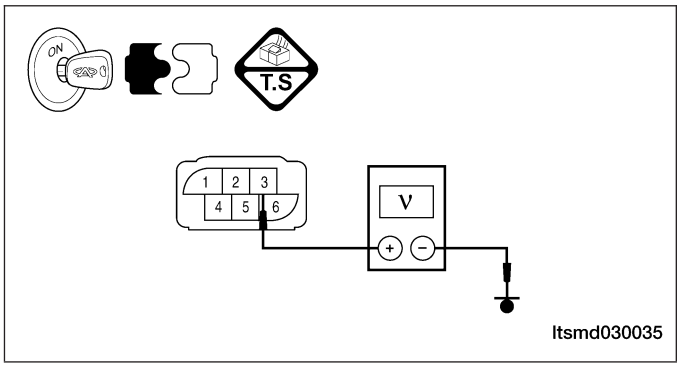

4. CHECK THE TPS SIGNAL CIRCUIT FOR A SHORT

- Turn ignition switch off.
- Disconnect ECM harness connector.
- Check harness for short to power.

Is the check result normal?

Yes >> Go to step 6.

No >> Go to the next step.

5. CHECK THE TPS GROUND CIRCUIT FOR AN OPEN AND SHORT

- Check harness continuity between following terminals.

TPS CONNECTOR TERMINAL	ECM CONNECTOR TERMINAL
2	78

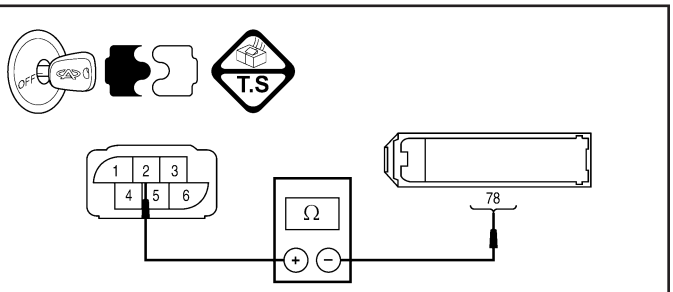

- Continuity should exist.
- Check the TPS ground circuit for an open.
- Check harness for a short to power.

Is the check result normal?

Yes >> Go to the next step.

No >> Repair circuit for an open or short to power in harness or connectors.

Downloaded from www.Manualslib.com manuals search engine

6. CHECK TPS

- Check resistance between TPS terminal 2 and 3.
- 2 kΩ ± 20 % (20°C) should exist.
- Turn ignition switch off.
- Connect ECM connector.
- Connect TPS connector.
- Turn ignition switch on.
- Check voltage between TPS terminal 3 and ground under the following conditions:

ECM TERMINAL NO.	ITEM	CONDITION		DATA (DC VOLTAGE)
32	Regulated sensor supply	Ignition switch: ON	-	Approximately 5 V
38	Electronic throttle control actuator (Position sensor)		• Engine stopped • Accelerator pedal: Fully released	4.24 V
			• Engine stopped • Accelerator pedal: Fully depressed	0.72 V
54	Electronic throttle control actuator		• Engine stopped • Accelerator pedal: Fully released	0.74 V
			• Engine stopped • Accelerator pedal: Fully depressed	4.62 V
78	Sensor (GND)		-	Approximately 0 V
64	Motor 4			12 V or 0 V
65	Motor 3			
66	Motor 2			12 V or 0 V
67	Motor 1			

Is the check result normal?

Yes >> Go to the next step.

No >> Replace the TPS.

7. CHECK DTC

- With the X-431 scan tool, read ECM DTCs.
- Refer to ″DTC Confirmation Procedure″.

Is DTC P0123 still present?

Yes >> Replace the ECM.

NOTE : The Immobilizer control module must be matched to the new ECM (See ECM Removal & Installation in Section 03 Electronic Engine Controls).

No >> The system is now operating properly.
Reassemble the vehicle and road test to verify the customers complaint is repaired.

Downloaded from www.Manualslib.com manuals search engine

P0132 - O_2 Sensor 1 Circuit High Voltage

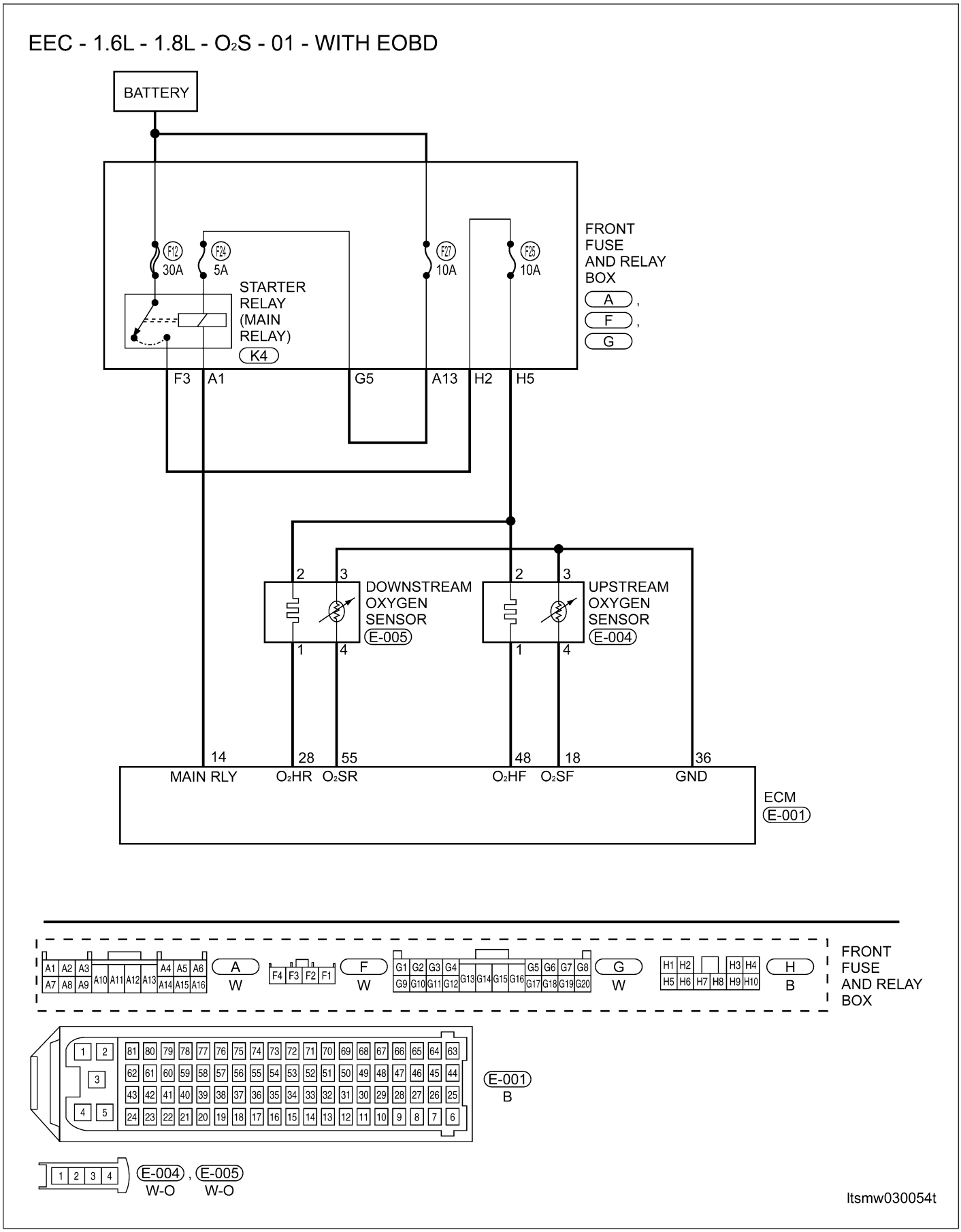

Downloaded from www.Manualslib.com manuals search engine

EEC - 1.6L - 1.8L - O_2S - 02 - WITHOUT EOBD

W1.6 : WITH 1.6L ENGINE SYSTEM

W1.8 : WITH 1.8L ENGINE SYSTEM

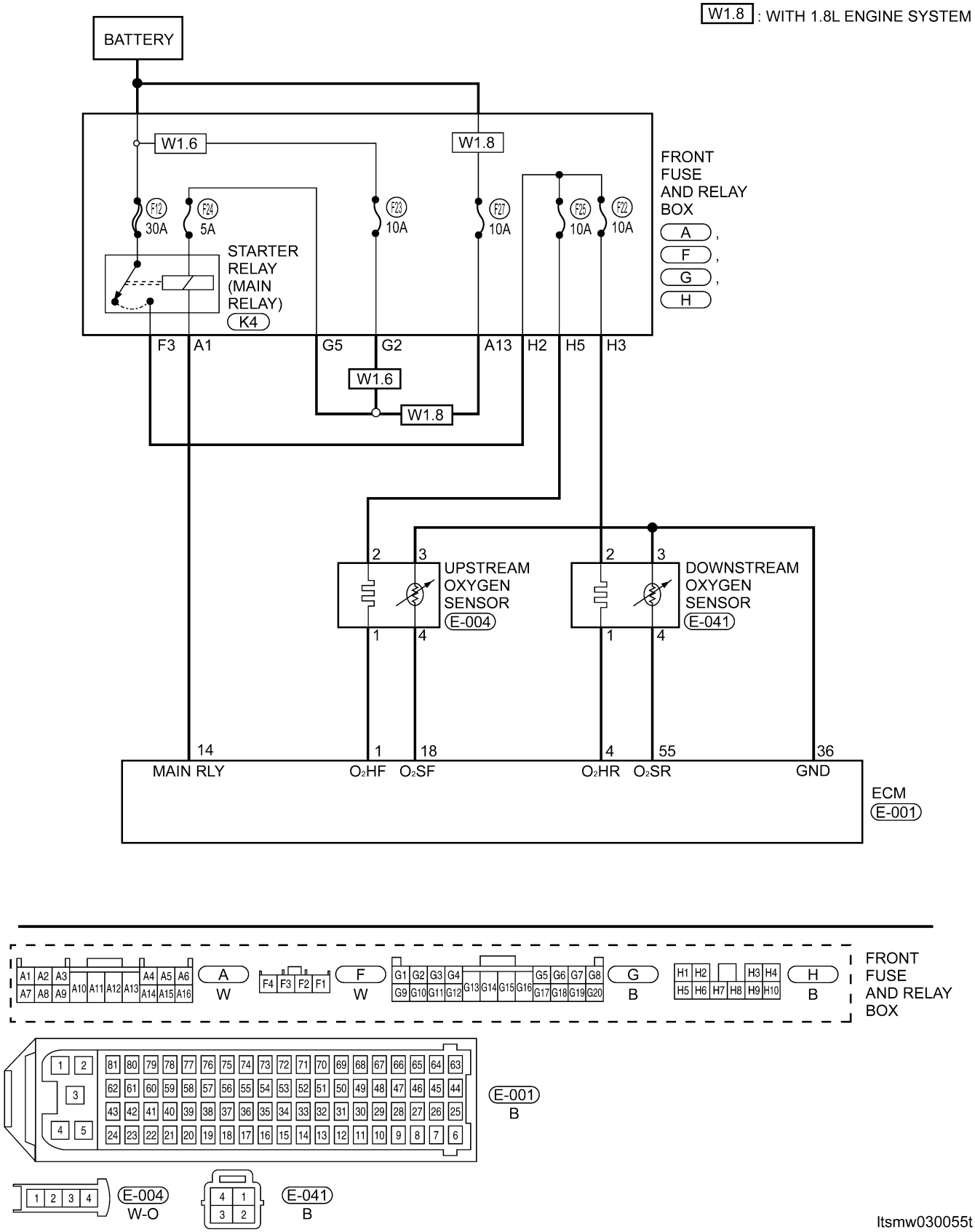

ltsmw030055t

Downloaded from www.Manualslib.com manuals search engine

Check reference values between ECM terminals and ground under the following conditions:

ECM TERMINAL NO.	ITEM	CONDITION	DATA (DC VOLTAGE)
18	Upstream O_2 sensor	• Engine is running • Warm-up condition	Approximately 0.1 V - 0.9 V (Change 5 - 8 times in 10 seconds periodically)
4 (Without EOBD) 28 (With EOBD)	Downstream O_2 sensor heating	-	-
36	Sensor (GND)	• Warm-up condition • Idle	Approximately 0 V
1 (Without EOBD) 48 (With EOBD)	Upstream O_2 sensor heating	-	-
55	Downstream O_2 sensor	• Engine is running • Warm-up condition	Approximately 100 mV

On Board Diagnostic Logic

- Self-diagnosis detection logic.

DTC NO.	DTC DEFINITION	DTC DETECTION CONDITION	POSSIBLE CAUSE
P0132	O_2 sensor 1 (upstream) circuit high voltage	Engine is running	• Fuel quality • O_2 Sensor 1 (upstream) • Harness or connectors (The sensor circuit is open or shorted) • ECM

DTC Confirmation Procedure:

Before performing the following procedure, confirm that battery voltage is more than 12 V.

- Turn ignition switch off.
- Connect the X-431 scan tool to the Data Link Connector (DLC) - use the most current software available.
- Turn ignition switch on.
- With the scan tool, record and erase stored DTCs in the ECM.
- Start engine and warm it up to the normal operating temperature.
- Turn ignition switch off and wait at least 10 seconds.
- Start engine and keep the engine speed 2000 RPM for at least 1 minute.
- Let engine idle for 2 minutes.
- If DTC is detected, go to Diagnostic Procedure - Step 1.
- If the DTC is not detected, the DTC condition is intermittent (See Diagnosis & Testing Diagnostic Help in Section 03 Electronic Engine Controls).

NOTE :
While performing electrical diagnosis & testing, always refer to the electrical schematics for specific circuit and component information.

Downloaded from www.Manualslib.com manuals search engine

Diagnostic Procedure

1. CHECK GROUND CONNECTIONS

- Turn ignition switch off.
- Loosen and retighten ground screws on the body (See Ground Inspection in Section 03 Electronic Engine Controls).
- Inspect ground connections E-207 and E-208 mounting position (See Vehicle Wiring Harness Layout - Engine Room Harness (With 1.6L/1.8L Engine) in Section 16 Wiring).

Are the ground connections OK?

Yes >> Go to the next step.

No >> Repair or replace ground connections.

2. CHECK O_2 SENSOR ELECTRICAL CONNECTOR

- Disconnect the O_2 sensor (1) electrical connector E-004.
- Inspect the electrical connector for damage.

Is the electrical connector OK?

Yes >> Go to the next step.

No >> Repair or replace the electrical connector as necessary.

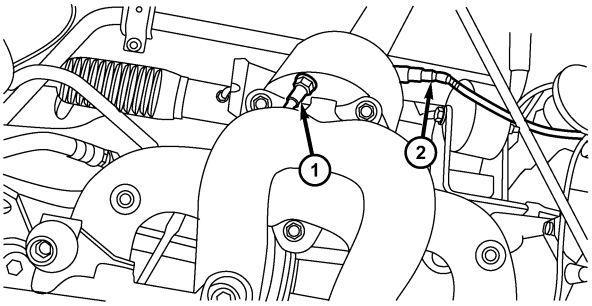

besm030017

3. CHECK O_2 SENSOR GROUND CIRCUIT

- Disconnect ECM harness connector.
- Check harness continuity between ECM terminal 18 and O_2 sensor terminal 4.
- Continuity should exist.
- Check harness open and short to power supply circuit.

Is the check result normal?

Yes >> Go to the next step.

No >> Repair or replace the circuit for an open or short to power in harness or connectors.

4. CHECK O_2 SENSOR INPUT SIGNAL CIRCUIT FOR AN OPEN AND SHORT

- Check harness continuity between ECM terminal and O_2 sensor terminal as follows.

O_2 SENSOR	ECM TERMINAL	O_2 SENSOR TERMINAL
Upstream O_2 sensor	18	4

Downloaded from www.Manualslib.com manuals search engine

- Continuity should exist.
- Check harness short to power supply circuit.

Is the check result normal?

Yes >> Go to the next step.

No >> Repair or replace the circuit for an open or short to power in harness or connectors.

5. CHECK O_2 SENSOR

- Connect O_2 sensor connector.
- Connect ECM connector.
- If with the X-431, reference data stream value.
- If without the X-431, check as following:
  - Start engine and warm it up to normal operating temperature.
  - Turn ignition switch off.
  - Start engine and keep the engine speed between 3,500 and 4,000 RPM for at least 1 minute.
  - Let engine idle for 1 minute.
  - Set the digital multimeter probes between ECM terminal 4 and ground.
  - Check sensor output signal.

CHECK ITEM	CHECK CONTENT		NORMAL VALUE
Oxygen sensor	• Warm-up condition • Become lean while decelerate	Decelerate from 4,000 RPM suddenly	Below 200 mV
	• Warm-up condition • Become rich while accelerate	Accelerate suddenly	600 - 1,000 mV
	• Warm-up condition • Check with O_2 sensor signal	Idle	100 - 900 mV
		2500 RPM	600 - 1,000 mV

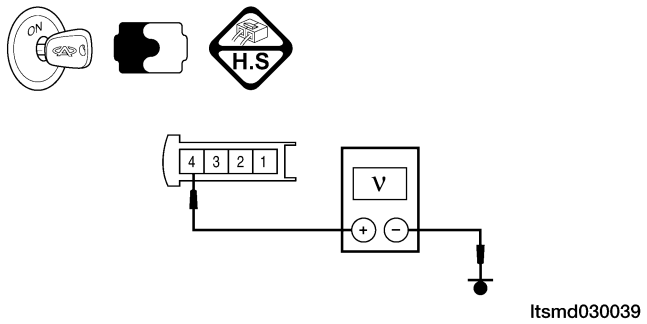

Is the check result normal?

Yes >> Go to the next step.

No >> Replace the O_2 sensor.

Downloaded from www.Manualslib.com manuals search engine

6. CHECK DTC

- With the X-431 scan tool, read ECM DTCs.
- See DTC Confirmation Procedure.

Is DTC P0132 still present?

Yes >> Replace the ECM.

NOTE : The Immobilizer control module must be matched to the new ECM (See ECM Removal & Installation in Section 03 Electronic Engine Controls).

No >> The system is now operating properly.
Reassemble the vehicle and road test to verify the customers complaint is repaired.

Downloaded from www.Manualslib.com manuals search engine

P0171 - Fuel Trim System Too Lean

EEC - 1.6L - MAP - 01

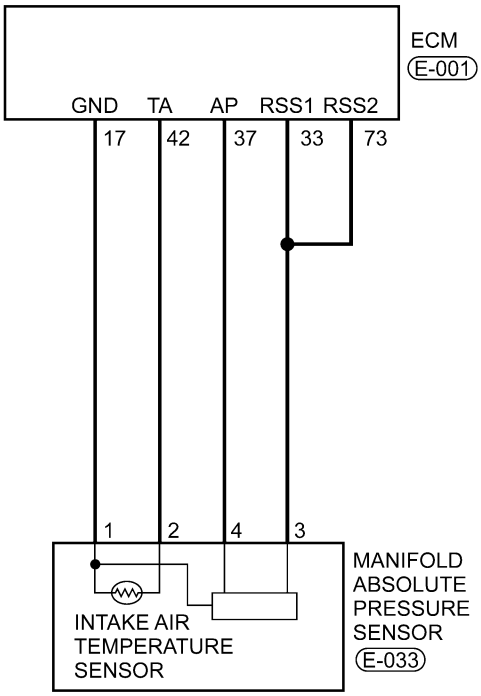

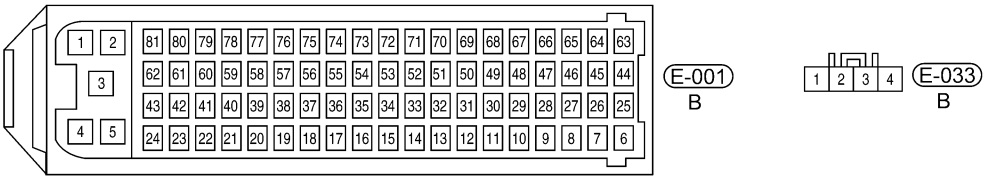

ltsmw030052t

Downloaded from www.Manualslib.com manuals search engine

EEC - 1.8L - MAF - 01

OE : WITHOUT EOBD
WE : WITH EOBD

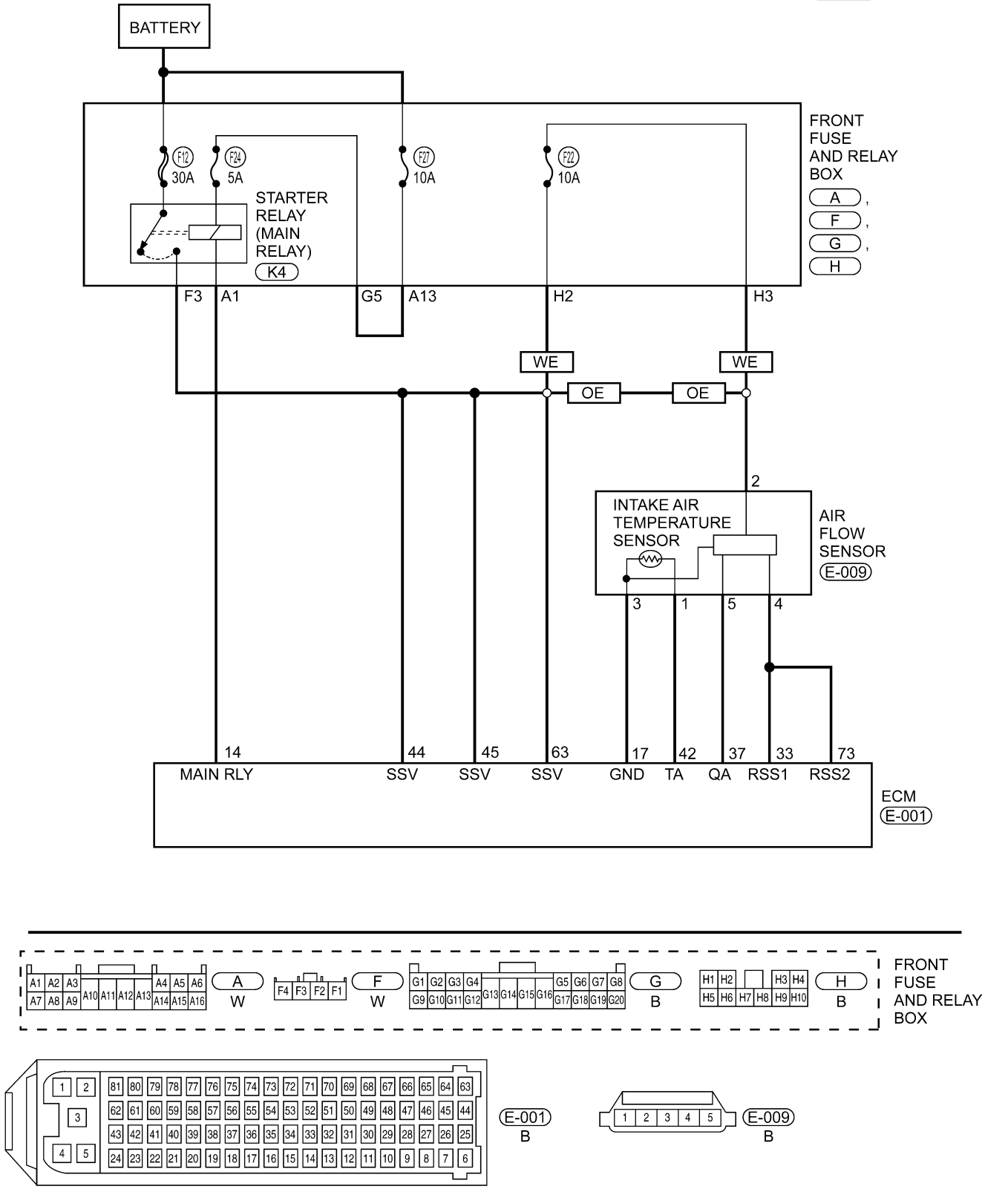

ltsmw030058t

Downloaded from www.Manualslib.com manuals search engine

EEC - 1.6L - 1.8L - INJ - 01

OE1.6 : WITH 1.6L ENGINE SYSTEM WITHOUT EOBD

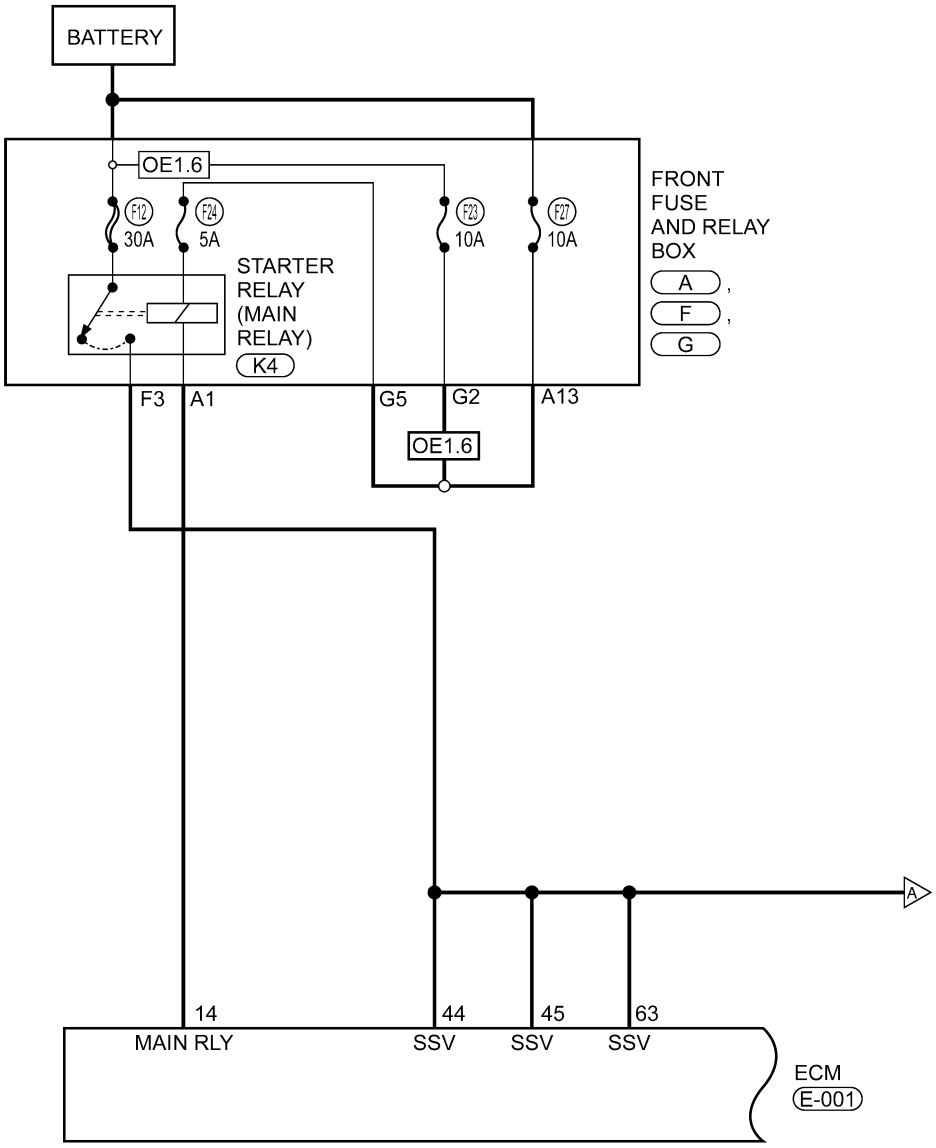

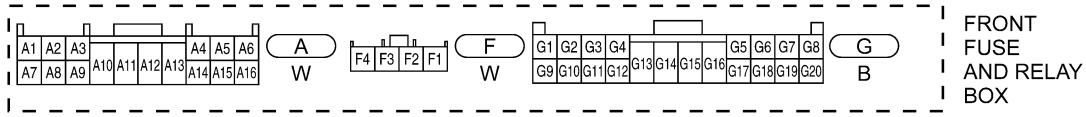

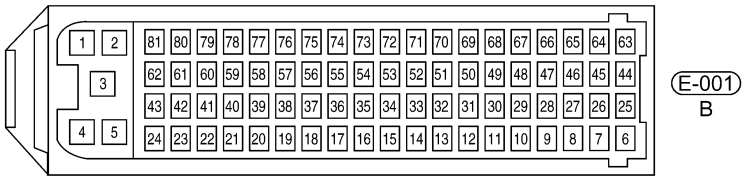

ltsmw030048t

Downloaded from www.Manualslib.com manuals search engine

EEC - 1.6L - 1.8L - INJ - 02

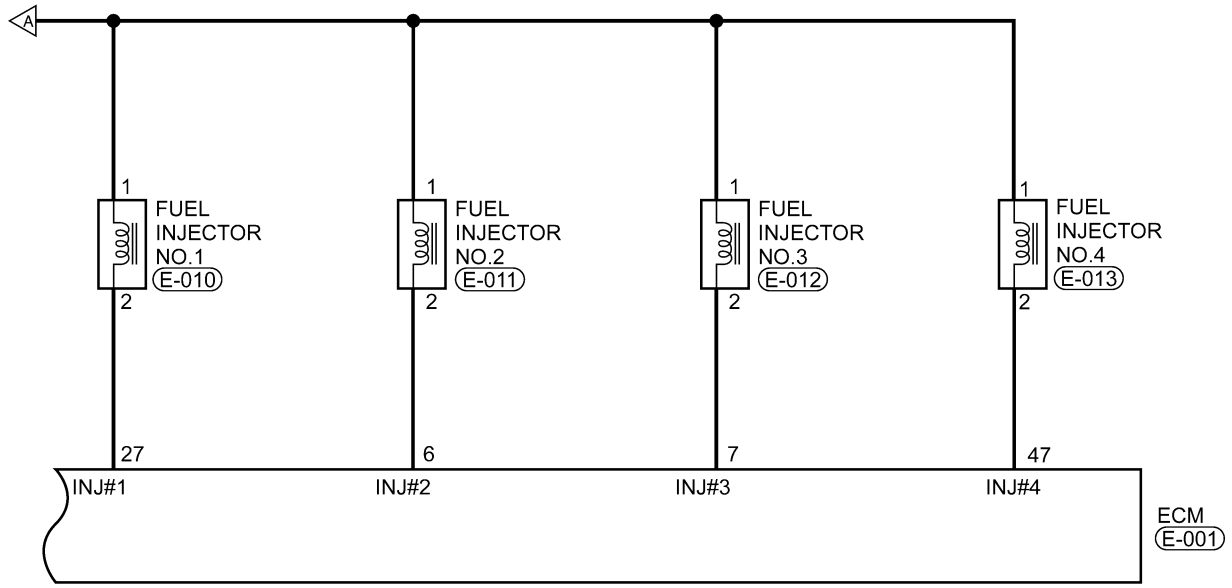

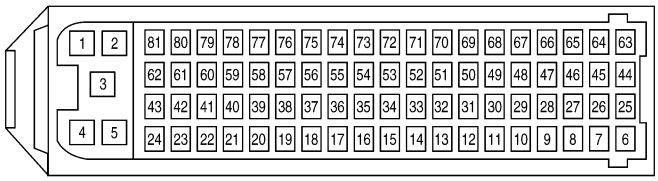

E-001
B

E-010, E-011, E-012, E-013
B B B B

ltsmw030049t

Downloaded from www.Manualslib.com manuals search engine

Check reference values between ECM terminals and ground under the following conditions:

ECM TERMINAL NO.	ITEM	CONDITION	DATA (AVERAGE DC VOLTAGE)
6	Injector 2	• Idle • Engine is running • Warm-up condition • Accelerate suddenly	Voltage: 11 - 14 V
7	Injector 3		
27	Injector 1		
47	Injector 4		

ECM TERMINAL NO.	ITEM	CONDITION	DATA (AVERAGE DC VOLTAGE)
17	Sensor (GND)	• Engine is running • Warm-up condition: 78°C • Idle: 795 RPM • IAT: 36°C • IAT signal voltage: 1.88 V	0 V
33	Regulated sensor supply 1		5 V
37	Air flow sensor (1.8L)		Approximately 322 kg/h
			Approximately 1.39 V
73	Regulated sensor supply 1		5 V

ECM TERMINAL NO.	ITEM	CONDITION	DATA (AVERAGE DC VOLTAGE)
37	Manifold Absolute Pressure (MAP) sensor (1.6L)	• Engine running: Idle • Press accelerator pedal slowly	Approximately 1.3 V
		• Engine running: 2000 RPM	Approximately 1.5 V
		• Press accelerator pedal quickly	Up to Approximately 4 V (instantaneous)

On Board Diagnostic Logic

- Self-diagnosis detection logic.

DTC NO.	DTC DEFINITION	DTC DETECTION CONDITION	DTC SET CONDITION	POSSIBLE CAUSE
P0171	Fuel trim system too lean	Engine is running	The amount of mixture ratio compensation is too large (The mixture ratio is too lean).	• Intake air leaks • Air flow sensor • Fuel injector • Exhaust gas leaks • Incorrect fuel pressure • lack of fuel • Incorrect PCV hose connection • Upstream O_2 sensor • ECM

DTC Confirmation Procedure:

Before performing the following procedure, confirm that battery voltage is more than 12 V.

- Turn ignition switch off.
- Connect the X-431 scan tool to the Data Link Connector (DLC) - use the most current software available.
- Turn ignition switch on.

Downloaded from www.Manualslib.com manuals search engine

- With the scan tool, record and erase stored DTCs in the ECM.
- Start engine and warm it to normal operating temperature, then select view DTC and data stream.
- If the DTC is detected, the DTC condition is current. Go to Diagnostic Procedure - Step 1.
- If the DTC is not detected, the DTC condition is intermittent (See Diagnostic Help and Intermittent DTC Troubleshooting in Section 03 Electronic Engine Controls for more information.

NOTE :
While performing electrical diagnosis & testing, always refer to the electrical schematics for specific circuit and component information.

Diagnostic Procedure

1. CHECK EXHAUST GAS LEAK

- Start engine and run it at idle.
- Listen exhaust gas leak before three way catalyst.

Is the check result normal?

Yes >> Go to the next step.

No >> Repair or replace.

2. CHECK FOR INTAKE AIR LEAK

- Listen for intake air leak after the air flow sensor.
- Check PCV hose connector.

Is the check result normal?

Yes >> Go to the next step.

No >> Repair or replace.

3. CHECK ECM CONTROL SIGNAL IN DATA STREAM

- With the X-431, select view data stream.

MONITOR ITEM	CONDITION		DATA
Injector pulse	• Engine: Warm up • Shift: P or N • Air condition: Off • No load	Idle	Approximately 2.5 ms

Is the check result normal?

Yes >> Go to step 6.

No >> Go to the next step.

Downloaded from www.Manualslib.com manuals search engine

4. CHECK O_2 SENSOR ELECTRICAL CONNECTOR

- Turn ignition switch off.
- Disconnect the O_2 sensor (1) electrical connector E-004.
- Inspect the electrical connector for damage.

Is the electrical connector OK?

Yes >> Go to the next step.

No >> Repair or replace the electrical connector as necessary.

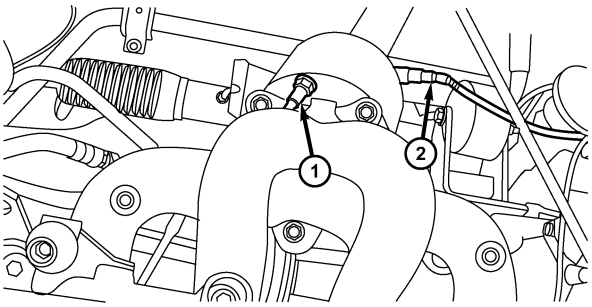

besm030017

5. CHECK UPSTREAM O_2 SENSOR SIGNAL CIRCUIT

- Disconnect ECM harness connector.
- Check harness continuity between the following terminals.

COMPONENT TERMINAL	ECM TERMINAL	O_2 SENSOR TERMINAL
TERMINAL	36	3
	18	4

- Continuity should exist.
- Check harness for short to ground.

Is the check result normal?

Yes >> Go to the next step.

No >> Repair or replace circuit for an open or short to power in harness or connectors.

Downloaded from www.Manualslib.com manuals search engine

6. CHECK MAF SENSOR

- For 1.8L engine, check air flow in data stream.

ECM TERMINAL NO.	ITEM	CONDITION	DATA (AVERAGE DC VOLTAGE)
37	Sensor signal	• Engine is running • ECT: 78°C • Idle: 795 RPM • IAT: 36°C • IAT signal voltage: 1.88 V	Approximately 322 kg/h
			Approximately 1.39 V

- For 1.6L engine, check MAP sensor signal voltage.

TERMINAL NO.	ITEM	CONDITION		DATA (DC VOLTAGE)
4	MAP sensor	Engine: Running	• Engine running: Idle • Press accelerator pedal slowly	Approximately 1.3 V
			• Press accelerator pedal quickly	Up to Approximately 4 V (instantaneous)

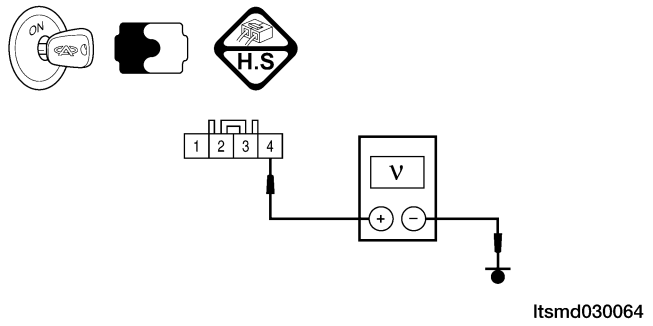

Is the check result normal?

Yes >> Go to the next step.

No >> Check connectors for rusted terminals or loose connectors in the air flow sensor circuit or ground.

Downloaded from www.Manualslib.com manuals search engine

7. CHECK THE FUEL PRESSURE

- Release fuel pressure to zero.
- Install fuel pressure gauge (2) and check fuel pressure.

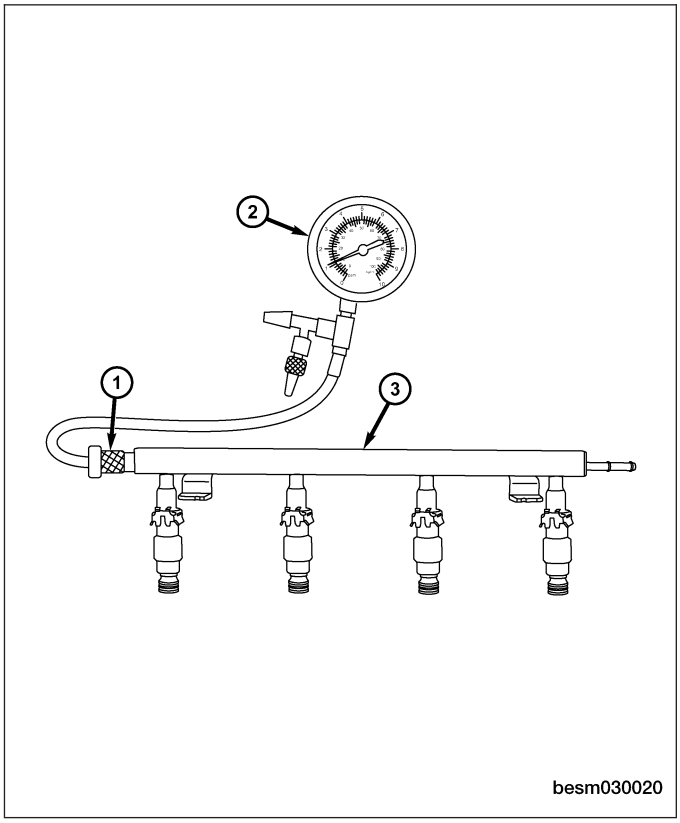

- Observe the following fuel pressures when testing (See Fuel Pressure Test in Section 04 Fuel Delivery).

FUEL PRESSURES	
Key On	400 kPa (4.0 bar)
Key Off	380 kPa (3.8 bar) in 10 minutes
Engine: Idle	400 - 420 kPa (4.0 - 4.2 bar)

Is the check result normal?

Yes >> Go to step 9.

No >> Go to the next step.

8. DETECT MALFUNCTIONING PART

- Check the following:
  - Fuel pump and circuit
  - Fuel pressure regulator
  - Fuel lines
  - Fuel filter for clogging

Is the check result normal?

Yes >> If with the X-431, go to the next step.
If without the X-431, go to step 10.

No >> Repair or replace malfunctioning part.

Downloaded from www.Manualslib.com manuals search engine

9. PERFORM ACTIVE TEST FUNCTION

- Start engine.
- Select "ACTIVE TEST" menu.
- Perform injector active test.
- Make sure that each test produces a momentary engine speed drop.

Is the check result normal?

Yes >> Go to step 12.

No >> Go to the next step.

10. CHECK FUNCTION OF INJECTOR

- Listen to each injector operating sound.
- Operating sound should exist.

Is the check result normal?

Yes >> Go to step 12.

No >> Go to the next step.

Downloaded from www.Manualslib.com manuals search engine

11. CHECK INJECTOR POWER SUPPLY CIRCUIT AND CONTROL CIRCUIT

- Turn ignition switch off.
- Disconnect injector harness connector (1).

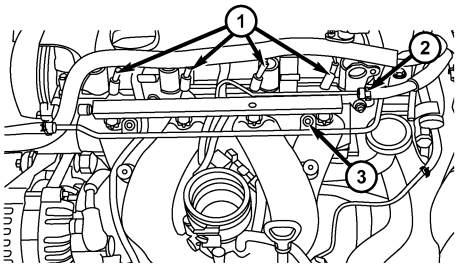

besm040006

- Turn ignition switch on.
- Check injector supply voltage between sensor terminal and ground in the electrical connector.

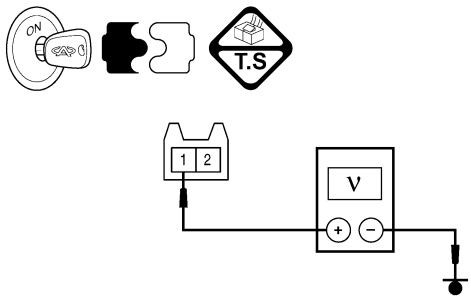

ltsmd030024

- Battery voltage should exist.
- Turn ignition switch off.
- Disconnect ECM harness connector.
- Check harness continuity between following terminals.

INJECTOR NO.	ECM TERMINAL	INJECTOR TERMINAL
1	27	2
2	6	2
3	7	2
4	47	2

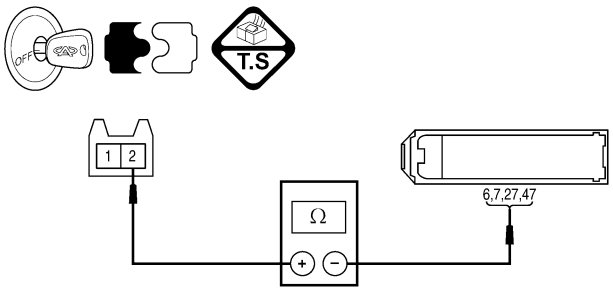

ltsmd030025

- Continuity should exist.
- Check harness for short to power.

Is the check result normal?

Yes >> Go to step next step.

No >> Repair or replace circuit for an open or short to power or short to ground in harness or connectors.

Downloaded from www.Manualslib.com manuals search engine

12. CHECK INJECTOR RESISTANCE

- Disconnect injector harness connectors (See Fuel Pressure Test in Section 04 - Fuel Delivery).
- Check the resistance of the injectors.

INJECTOR NO.	INJECTOR TERMINAL	RESISTANCE (APPROXIMATELY) Ω (20°C)
1	1 & 2	16
2	1 & 2	
3	1 & 2	
4	1 & 2	

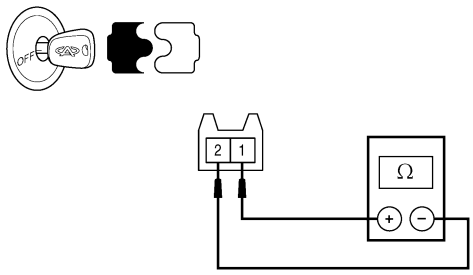

ltsmd030027

Is the check result normal?

Yes >> Go to the next step.

No >> Replace injector.
Go to step 14.

13. CHECK INJECTOR

WARNING!

Confirm that the engine is cooled down and there are no fire hazards near the vehicle.

- Remove fuel delivery rail with injectors (See Fuel Injector Rail Removal & Installation 1.6L & 1.8L & 2.0L in Section 04 Fuel Delivery).

NOTE :
Be careful not to drop the fuel injectors when removing the fuel delivery rail.
- Keep fuel hose and all injectors connected to injector rail.
- Disconnect all ignition coil harness connectors.
- Prepare pans or saucers under each injector.
- Observe the fuel injectors and crank engine for about 3 seconds.
- Fuel should be sprayed evenly by each injector.

Is the check result normal?

Yes >> Go to next step.

No >> Clean any injector that sprays unevenly or replace any injector that does not spray fuel.

Downloaded from www.Manualslib.com manuals search engine

14. CHECK DTC

- With the X-431 scan tool, read ECM DTCs.
- See DTC ″Confirmation Procedure″.

Is DTC P0171 still present?

Yes >> Replace the ECM.

NOTE : The Immobilizer control module must be matched to the new ECM (See ECM Removal & Installation in Section 03 Electronic Engine Controls).

No >> The system is now operating properly.
Reassemble the vehicle and road test to verify the customers complaint is repaired.

Downloaded from www.Manualslib.com manuals search engine

P0172 - Fuel Trim System Too Rich

EEC - 1.6L - MAP - 01

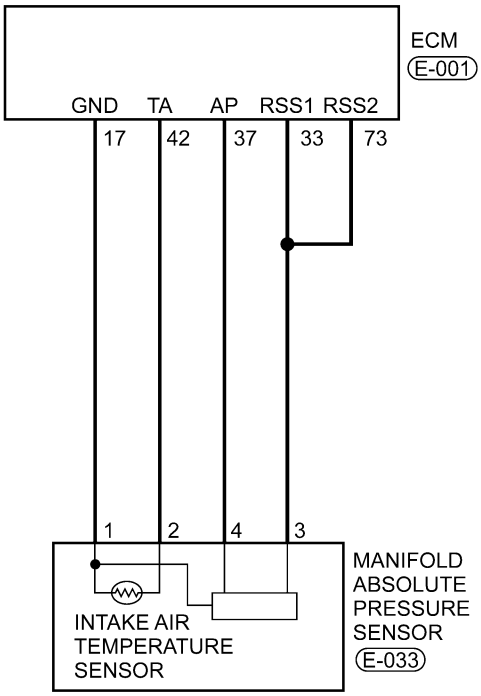

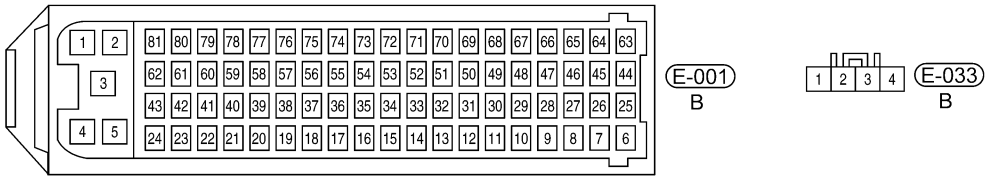

ltsmw030052t

Downloaded from www.Manualslib.com manuals search engine

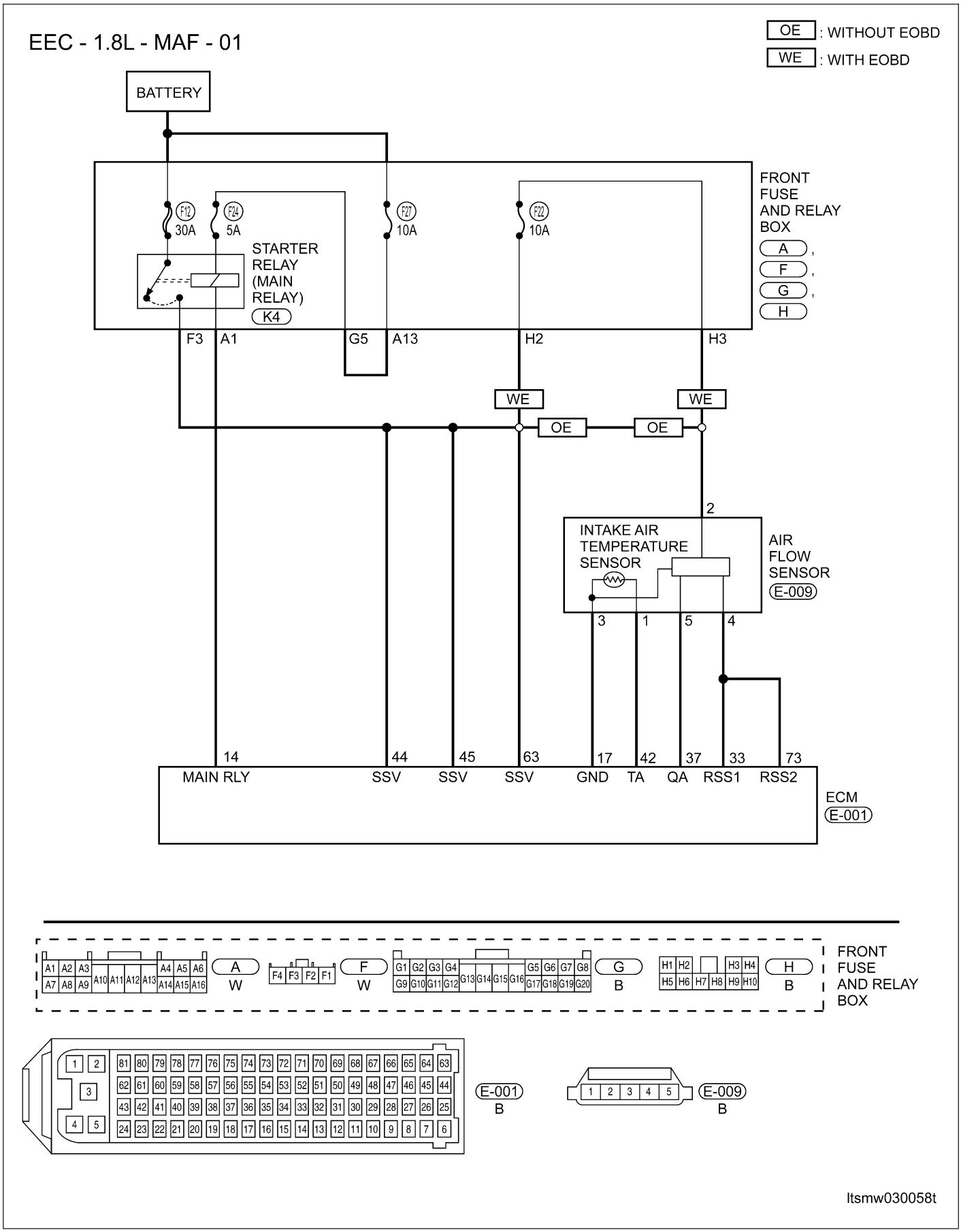

Downloaded from www.Manualslib.com manuals search engine

EEC - 1.6L - 1.8L - INJ - 01

OE1.6 : WITH 1.6L ENGINE SYSTEM WITHOUT EOBD

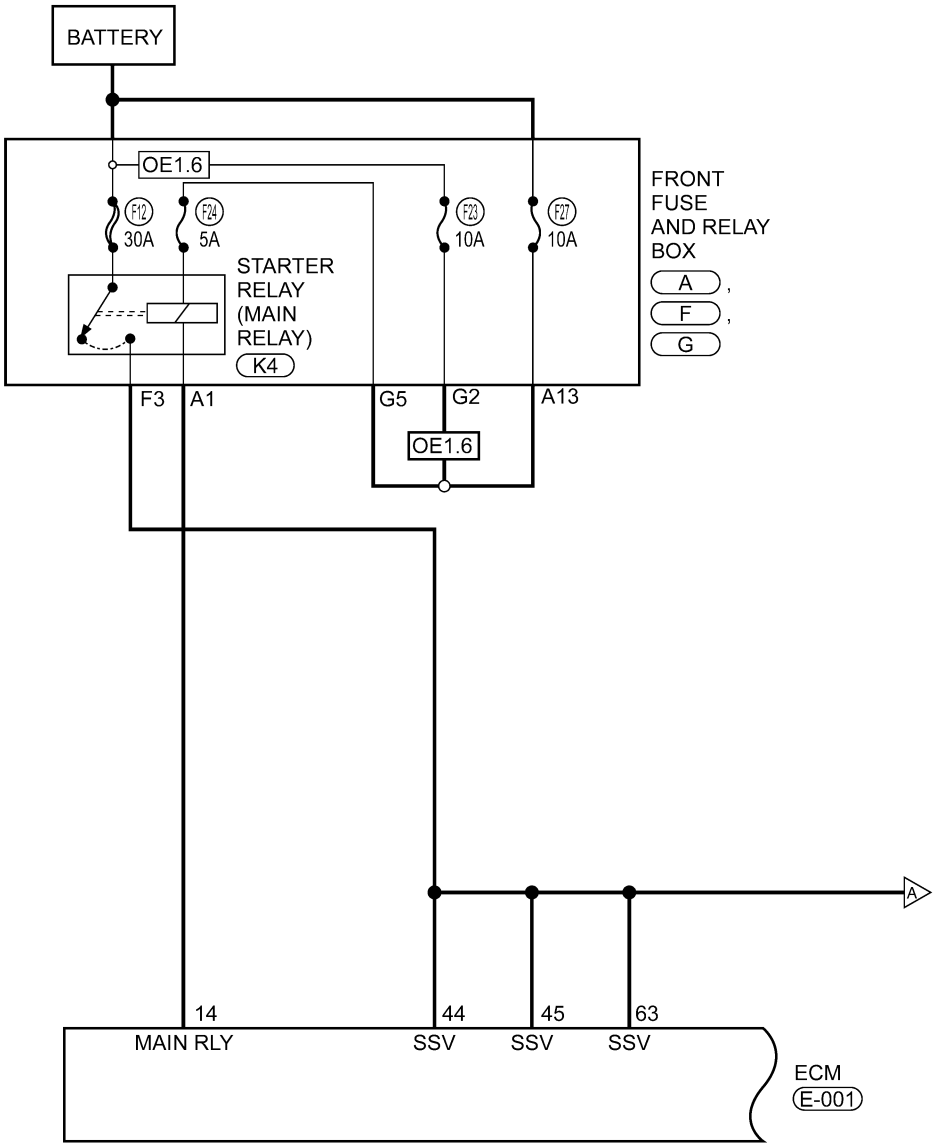

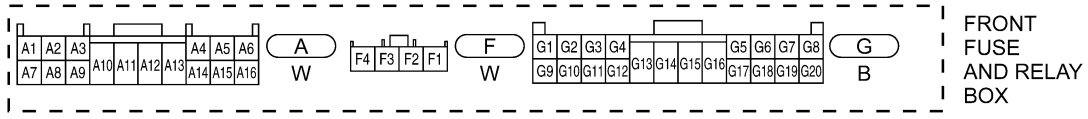

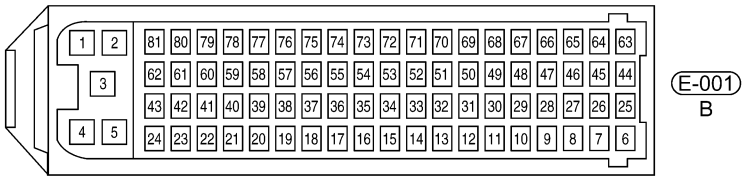

ltsmw030048t

Downloaded from www.Manualslib.com manuals search engine

EEC - 1.6L - 1.8L - INJ - 02

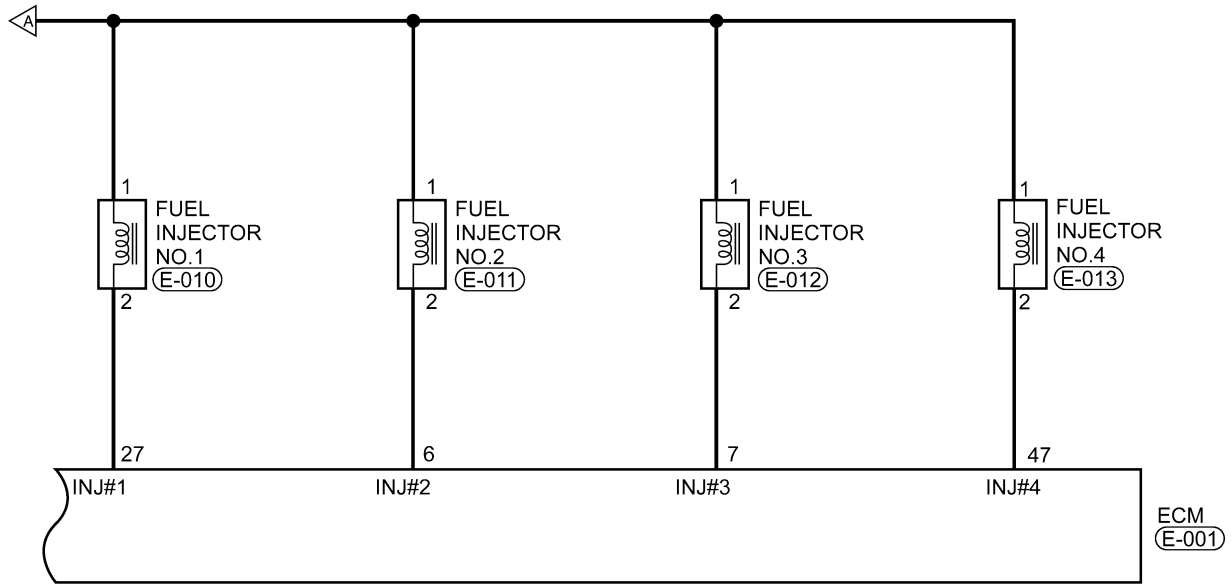

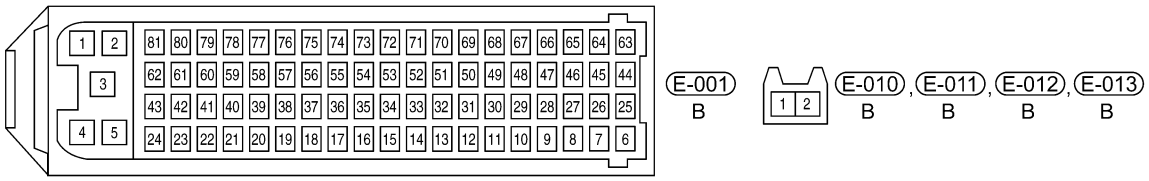

ltsmw030049t

Downloaded from www.Manualslib.com manuals search engine

Check reference values between ECM terminals and ground under the following conditions:

ECM TERMINAL NO.	ITEM	CONDITION	DATA (AVERAGE DC VOLTAGE)
6	Injector 2	• Engine is running • Warm-up condition • Idle • Accelerate suddenly	Voltage: 11 - 14 V
7	Injector 3		
27	Injector 1		
47	Injector 4		

ECM TERMINAL NO.	ITEM	CONDITION	DATA (AVERAGE DC VOLTAGE)
17	Sensor (GND)	• Engine is running • Warm-up condition: 78°C • Idle: 795 RPM • IAT: 36°C • IAT signal: 1.88 V	0 V
33	Regulated sensor supply 1		5 V
37	Air flow sensor (1.8L)		322 kg/h
			1.39 V
73	Regulated sensor supply 1		5 V

ECM TERMINAL NO.	ITEM	CONDITION	DATA (AVERAGE DC VOLTAGE)
37	Manifold Absolute Pressure (MAP) sensor (1.6L)	• Engine running: Idle • Press accelerator pedal slowly	Approximately 1.3 V
		• Engine running: 2000 RPM	Approximately 1.5 V
		• Press accelerator pedal quickly	Up to approximately 4 V (instantaneous)

On Board Diagnostic Logic

- Self-diagnosis detection logic.

DTC NO.	DTC DEFINITION	DTC DETECTION CONDITION	DTC SET CONDITION	POSSIBLE CAUSE
P0172	Fuel trim system too rich	Engine is running	The amount of mixture ratio compensation is too large (The mixture ratio is too rich)	• Air flow sensor • Manifold Absolute Pressure (MAP) sensor • Fuel injector • Exhaust gas leaks • Incorrect fuel pressure • Upstream O_2 sensor • ECM

DTC Confirmation Procedure:

Before performing the following procedure, confirm that battery voltage is more than 12 V.

- Turn ignition switch off.
- Connect the X-431 scan tool to the Data Link Connector (DLC) - use the most current software available.
- Turn ignition switch on.
- With the scan tool, record and erase stored DTCs in the ECM.

Downloaded from www.Manualslib.com manuals search engine

- Start engine and warm it to normal operating temperature, then select view DTC and data stream.
- If the DTC is detected, the DTC condition is current. Go to Diagnostic Procedure - Step 1.
- If the DTC is not detected, the DTC condition is intermittent (See Diagnostic Help and Intermittent DTC Troubleshooting in Section 03 Electronic Engine Controls for more information.

NOTE :
While performing electrical diagnosis & testing, always refer to the electrical schematics for specific circuit and component information.

Diagnostic Procedure

1. CHECK EXHAUST GAS LEAK

- Start engine and run it at idle.
- Listen for exhaust leak before three way catalyst.

Is the check result normal?

Yes >> Go to the next step.

No >> Repair or replace.

2. CHECK ECM CONTROL SIGNAL IN DATA STREAM

- With the X-431, select view data stream.

MONITOR ITEM	CONDITION		DATA
Injector pulse	• Engine: Warm up • Shift: P or N • Air condition: Off • No load	Idle	Approximately 2.5 ms

Is the check result normal?

Yes >> Go to next 5.

No >> Go to the next step.

3. CHECK O_2 SENSOR ELECTRICAL CONNECTOR

- Disconnect upstream O_2 sensor (1) harness connector.
- Inspect the electrical connector for damage.

Is the electrical connector OK?

Yes >> Go to the next step.

No >> Repair or replace the electrical connector as necessary.

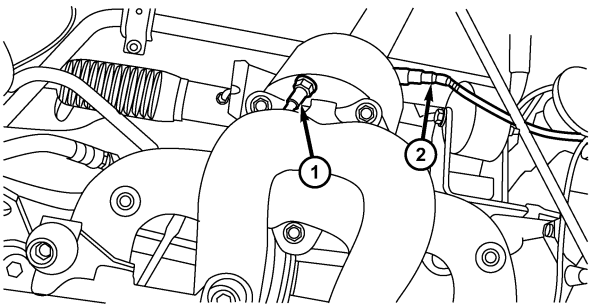

besm030017

Downloaded from www.Manualslib.com manuals search engine

4. CHECK UPSTREAM O_2 SENSOR SIGNAL CIRCUIT

- Disconnect ECM harness connector.
- Check harness continuity between the following terminals.

COMPONENT TERMINAL	ECM TERMINAL	O_2 SENSOR TERMINAL
TERMINAL	36	3
	18	4

- Continuity should exist.
- Check harness for short to power.

Is the check result normal?

Yes >> Go to the next step.

No >> Repair or replace circuit for an open or short to power in harness or connectors.

5. CHECK THE FUEL PRESSURE

- Release fuel pressure to zero.
- Install fuel pressure gauge (2) and check fuel pressure.

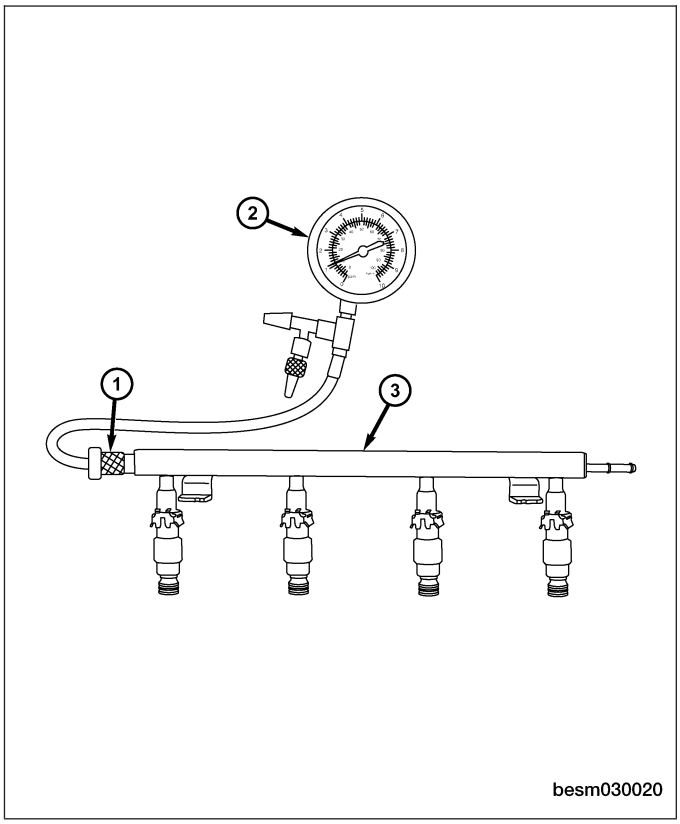

- Observe the following fuel pressures when testing (See Fuel Pressure Test in Section 04 Fuel Delivery).

FUEL PRESSURES	
Key On	400 kPa (4.0 bar)
Key Off	380 kPa (3.8 bar) in 10 minutes
Engine: Idle	400 - 420 kPa (4.0 - 4.2 bar)

Downloaded from www.Manualslib.com manuals search engine

Is the check result normal?

Yes >> Go to step 7.

No >> Go to the next step.

6. DETECT MALFUNCTIONING PART

- Check the following:
  - Fuel pump and circuit
  - Fuel pressure regulator

Is the check result normal?

Yes >> Go to the next step.

No >> Repair or replace.

7. CHECK MAF/MAP SENSOR

- Turn ignition switch off.
- Install all removed parts.
- For 1.8L engine, check MAF signal in data stream.

TERMINAL NO.	ITEM	CONDITION	DATA (AVERAGE DC VOLTAGE)
37	MAF sensor	• Engine is running • ECT: 78°C • Idle: 795 RPM • IAT: 36°C • IAT signal: 1.88 V	322 kg/h
			1.39 V

- For 1.6L engine, check MAP sensor signal voltage.

TERMINAL NO.	ITEM	CONDITION		DATA (DC VOLTAGE)
4	MAP sensor	Engine: Running	• Engine running: Idle • Press accelerator pedal slowly.	Approximately 1.3 V
			• Press accelerator pedal quickly.	Up to approximately 4 V (Instantaneous)

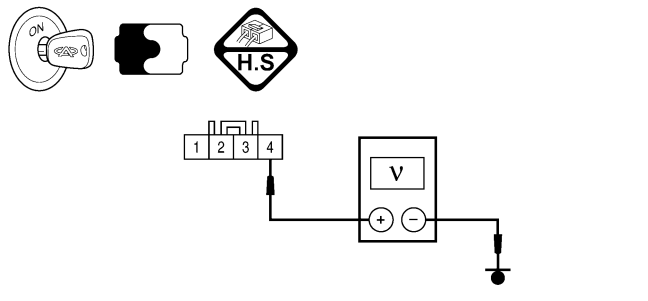

Is the check result normal?

Yes >> If with the X-431, go to the next step.
If without the X-431, go to step 9.

No >> Check connectors for damaged or air flow signal circuit for short to power.

Downloaded from www.Manualslib.com manuals search engine

8. PERFORM ACTIVE TEST FUNCTION

- Start engine.
- Select "ACTIVE TEST" menu.
- Perform injector active test.
- Make sure that each test produces a momentary engine speed drop.

Is the check result normal?

Yes >> Go to step 11.

No >> Go to the next step.

9. CHECK FUNCTION OF INJECTOR

- Listen to each injector operating sound.
- Operating sound should exist.

Is the check result normal?

Yes >> Go to step 11.

No >> Go to the next step.

10. CHECK INJECTOR CONTROL CIRCUIT

- Turn ignition switch off.
- Disconnect injector harness connector (1).

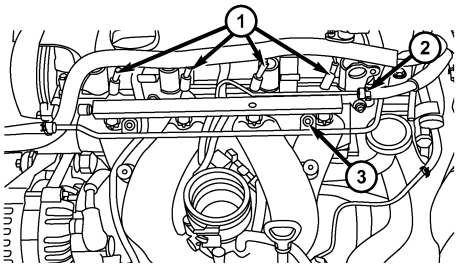

besm040006

- Disconnect ECM harness connector.
- Check harness for a short to ground between the following terminals.

INJECTOR NO.	ECM TERMINAL	INJECTOR TERMINAL
1	27	2
2	6	2
3	7	2
4	47	2

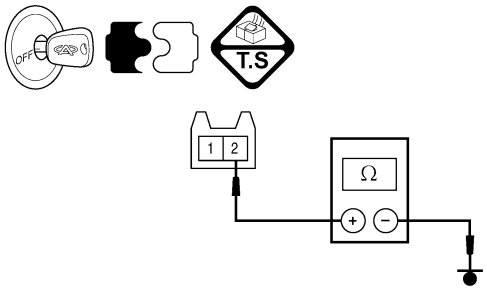

ltsmd030040

Downloaded from www.Manualslib.com manuals search engine

- Continuity should not exist.

Is the check result normal?

Yes >> Go to the next step.

No >> Repair or replace circuit for short to ground in harness or connectors.

11. CHECK INJECTOR RESISTANCE

- Disconnect injector harness connectors (See Fuel Pressure Test in Section 04 Fuel Delivery).
- Check the resistance of the injectors.

INJECTOR NO.	INJECTOR TERMINAL	RESISTANCE (APPROXIMATELY) Ω (20°C)
1	1 & 2	16
2	1 & 2	
3	1 & 2	
4	1 & 2	

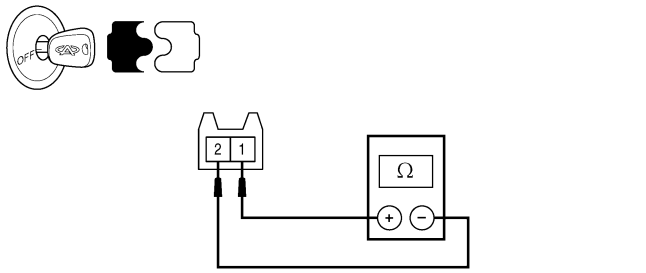

Is the check result normal?

Yes >> Go to the next step.

No >> Replace injector.
Go to step 13.

12. CHECK INJECTOR

WARNING!

Confirm that the engine is cooled down and there are no fire hazards near the vehicle.

- Remove fuel delivery rail with injectors (See Fuel Injector Rail Removal & Installation 1.6L & 1.8L & 2.0L in Section 04 Fuel Delivery).

NOTE :
Be careful not to drop the fuel injectors when removing the fuel delivery rail.
- Keep fuel hose and all injectors connected to injector rail.
- Disconnect all injector harness connectors.
- Disconnect all ignition coil harness connectors.
- Prepare pans or saucers under each injector.
- Crank engine for about 3 seconds.
- Make sure fuel does not drip from injector.

Is the check result normal?

Yes >> Go to next step.

No >> Replace the injectors from which fuel is dripping. Always replace O-ring with new one.

Downloaded from www.Manualslib.com manuals search engine

13. CHECK DTC

- With the X-431 scan tool, read ECM DTCs.
- Refer to ″DTC Confirmation Procedure″.

Is DTC P0172 still present?

Yes >> Replace the ECM.

NOTE : The Immobilizer control module must be matched to the new ECM (See ECM Removal & Installation in Section 03 Electronic Engine Controls).

No >> The system is now operating properly.
Reassemble the vehicle and road test to verify the customers complaint is repaired.

Downloaded from www.Manualslib.com manuals search engine

P0201 - Cylinder 1 - Injector Circuit
P0202 - Cylinder 2 - Injector Circuit
P0203 - Cylinder 3 - Injector Circuit
P0204 - Cylinder 4 - Injector Circuit

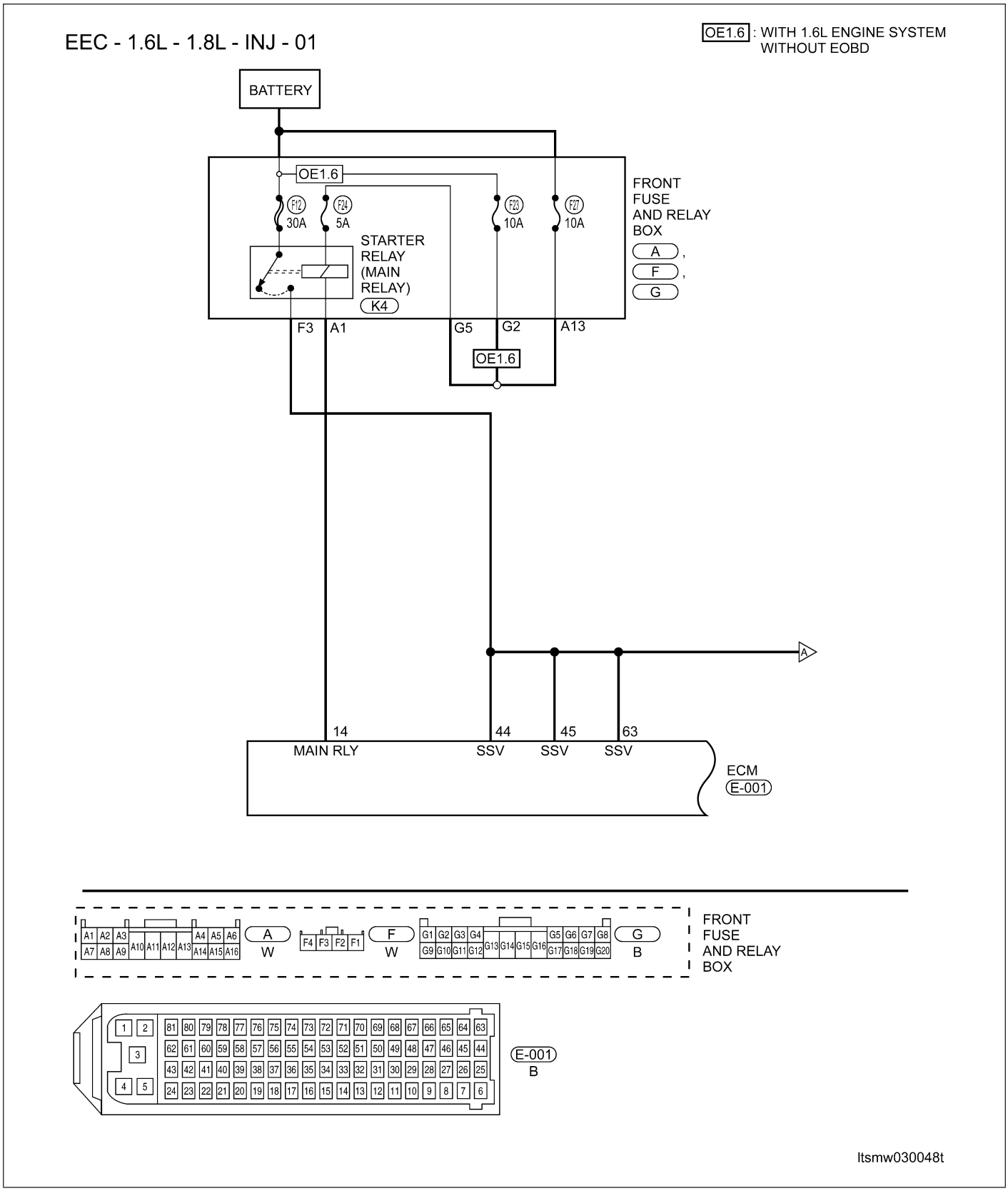

Downloaded from www.Manualslib.com manuals search engine

EEC - 1.6L - 1.8L - INJ - 02

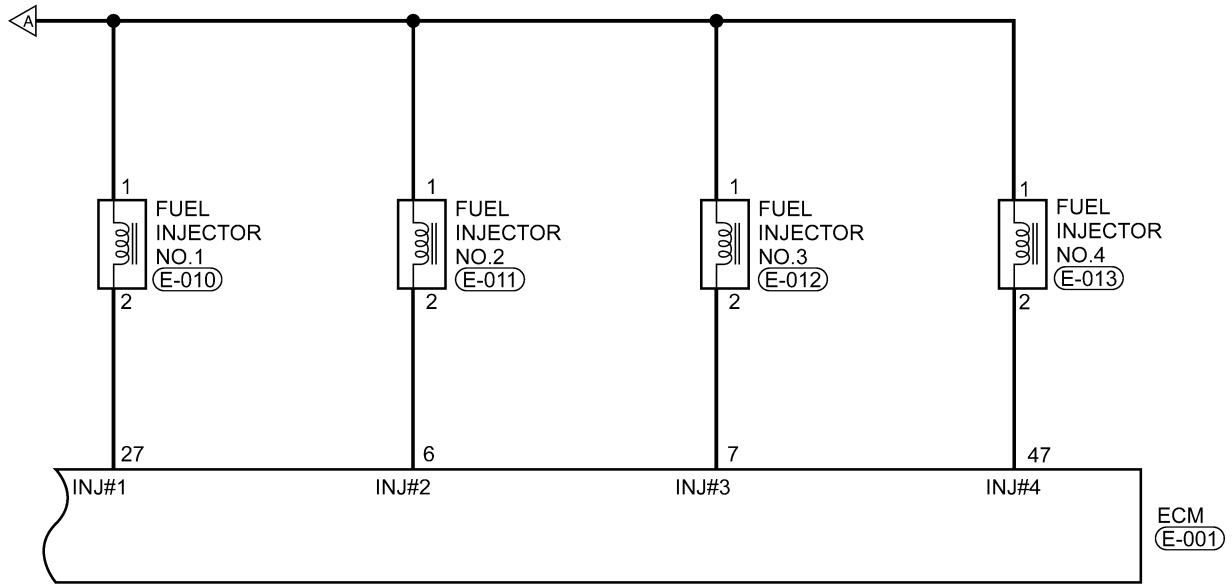

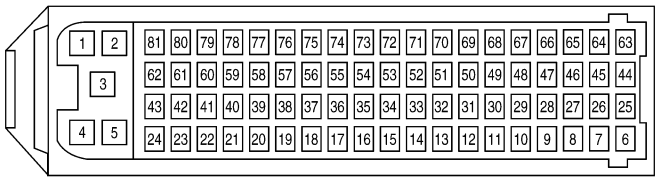

E-001
B

E-010, E-011, E-012, E-013
B B B B

ltsmw030049t

Downloaded from www.Manualslib.com manuals search engine

Check reference values between ECM terminals and ground under the following conditions:

ECM TERMINAL NO.	ITEM	CONDITION	DATA (AVERAGE DC VOLTAGE)
6	Injector 2	• Engine is running • Warm-up condition • Idle • Accelerate suddenly	Voltage: 11 - 14 V
7	Injector 3		
27	Injector 1		
47	Injector 4		

On Board Diagnostic Logic

- Self-diagnosis detection logic.

DTC NO.	DTC DEFINITION	DTC DETECTION CONDITION	POSSIBLE CAUSE
P0201	Cylinder 1 - Injector Circuit	Engine is running	• Injector • Harness or connectors • ECM
P0202	Cylinder 2 - Injector Circuit		
P0203	Cylinder 3 - Injector Circuit		
P0204	Cylinder 4 - Injector Circuit		

DTC Confirmation Procedure:

Before performing the following procedure, confirm that battery voltage is more than 12 V.

- Turn ignition switch off.
- Connect the X-431 scan tool to the Data Link Connector (DLC) - use the most current software available.
- Turn ignition switch on.
- With the scan tool, record and erase stored DTCs in the ECM.
- Start engine and warm it to normal operating temperature then select view DTC.
- If DTC is detected, go to Diagnostic Procedure - Step 1.
- If the DTC is not detected, the DTC condition is intermittent (See Diagnosis & Testing Diagnostic Help in Section 03 Electronic Engine Controls).

NOTE :
While performing electrical diagnosis & testing, always refer to the electrical schematics for specific circuit and component information.

Diagnostic Procedure

1. CHECK GROUND CONNECTIONS

- Turn ignition switch off.
- Loosen and retighten ground screws on the body (See Ground Inspection in Section 03 Electronic Engine Controls).
- Inspect ground connections E-207 and E-208 mounting position (See Vehicle Wiring Harness Layout - Engine Room Harness (With 1.6L/1.8L Engine) in Section 16 Wiring).

Are the ground connections OK?

Yes >> Go to the next step.

No >> Repair or replace ground connections.

Downloaded from www.Manualslib.com manuals search engine

2. INSPECTION START

- Start the engine.

Is any cylinder ignited?

Yes >> If with the X-431, go to the next step.
If without the X-431, go to step 5.

No >> Go to step 6.

3. PERFORM ACTIVE TEST FUNCTION

- Select ″ACTIVE TEST″ menu.
- Perform injector active test.
- Make sure that each test produces a momentary engine speed drop.

Is the check result normal?

Yes >> Go to step 11.

No >> Go to step 6.

4. CHECK FUNCTION OF INJECTOR

- Listen to injector operating sound one by one.

Do all injectors clicking noise exist?

Yes >> Go to step 11.

No >> Go to the next step.

5. CHECK INJECTOR ELECTRICAL CONNECTOR

- Turn ignition switch off.
- Disconnect the injector electrical connector (1).
- Inspect the electrical connector for damage.

Is the electrical connector OK?

Yes >> Go to the next step.

No >> Repair or replace the electrical connector as necessary.

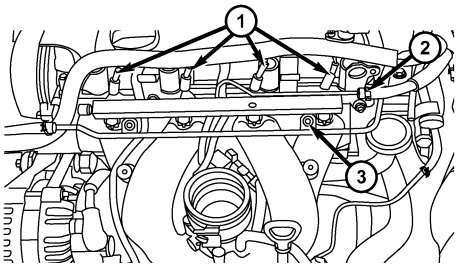

besm040006

Downloaded from www.Manualslib.com manuals search engine

6. CHECK INJECTOR POWER SUPPLY CIRCUIT FOR OPEN

- Turn ignition switch on.
- Check injector supply voltage between sensor terminal and ground in the electrical connector.
- Battery voltage should exist.

Is the check result normal?

Yes >> Go to step 8.

No >> Go to the next step.

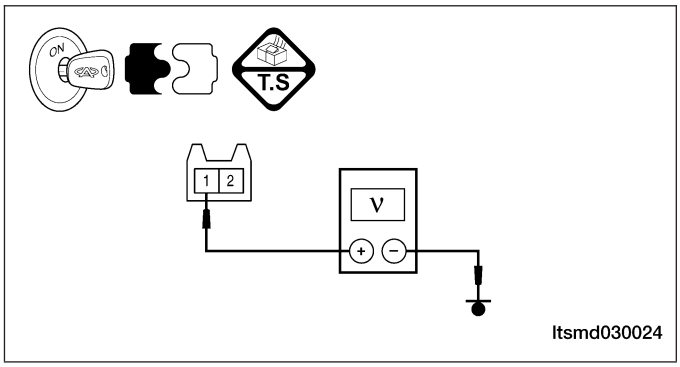

7. DETECT MALFUNCTIONING PART

- Check the following:
  - Front fuse and relay box F3, A13, G5
  - Fuse 12, fuse 24, fuse 27

  Without EOBD (1.6L)

  - Front fuse and relay box F3, G2, G5
  - Fuse 12, fuse 23, fuse 24
  - harness between injector and fuse

Is the check result normal?

Yes >> With the X-431, check the system, If OK, go to the next step.

No >> Repair or replace malfunctioning parts.

8. CHECK INJECTOR CONTROL CIRCUITS FOR AN OPEN

- Check injector control circuit voltage.
- 3.6 V should exist.

Is the check result normal?

Yes >> Go to step 10.

No >> Go to the next step.

Downloaded from www.Manualslib.com manuals search engine

9. DETECT MALFUNCTIONING PART

- Turn ignition switch off.
- Disconnect ECM harness connector.
- Check harness continuity between following terminals.

INJECTOR NO.	ECM TERMINAL	INJECTOR TERMINAL
1	27	2
2	6	2
3	7	2
4	47	2

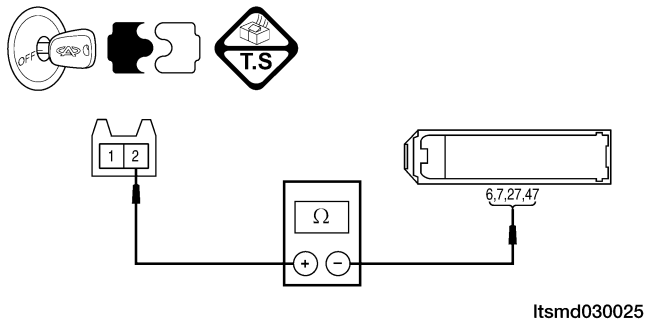

- Continuity should exist.

Is the check result normal?

Yes >> Go to the next step.

No >> Repair circuit for an open in harness or connectors.

10. CHECK INJECTOR RESISTANCE

- Check fuel injector resistance between the following terminals.

INJECTOR NO.	INJECTOR TERMINAL	RESISTANCE (APPROXIMATELY) Ω (20°C)
1	1 & 2	12
2	1 & 2	
3	1 & 2	
4	1 & 2	

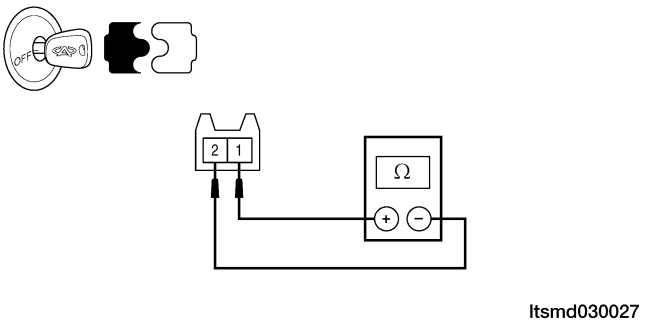

- Check sensor signal output.
- Connect ECM connector.
- Connect injector connector.
- Check fuel injector voltage between the following terminals and ground.

TERMINAL NO.	ITEM	CONDITION	DATA (AVERAGE DC VOLTAGE)
6	Injector	• Engine is running • Warm-up condition • Idle • Accelerate suddenly	Voltage: 11 - 14 V
7			
27			
47			

Downloaded from www.Manualslib.com manuals search engine

Is the check result normal?

Yes >> Go to the next step.

No >> Replace injector.

11. CHECK DTC

- With the X-431 scan tool, read ECM DTCs.
- See ″DTC Confirmation Procedure″.

Is DTC P0201, P0202, P0203 or P0204 still present?

Yes >> Replace the ECM.

NOTE : The Immobilizer control module must be matched to the new ECM (See ECM Removal & Installation in Section 03 Electronic Engine Controls).

No >> The system is now operating properly.
Reassemble the vehicle and road test to verify the customers complaint is repaired.

Downloaded from www.Manualslib.com manuals search engine

P0221 - Throttle Position Sensor B Performance

EEC - 1.6L - 1.8L - TPS - 01

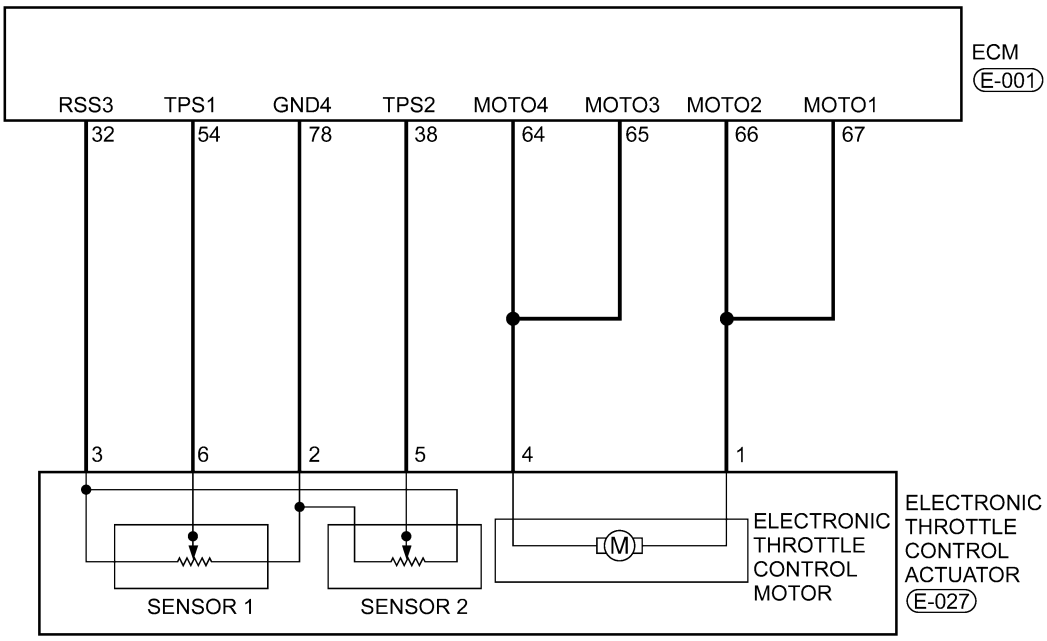

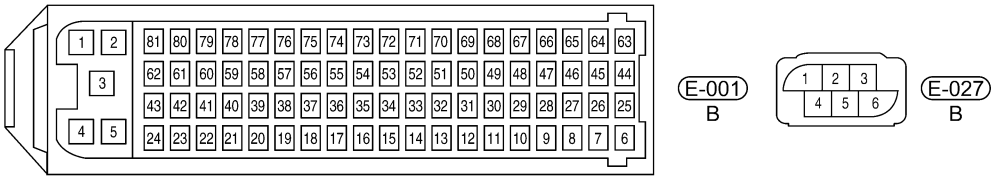

ltsmw030044t

Downloaded from www.Manualslib.com manuals search engine

EEC - 1.6L - 1.8L - APS - 01

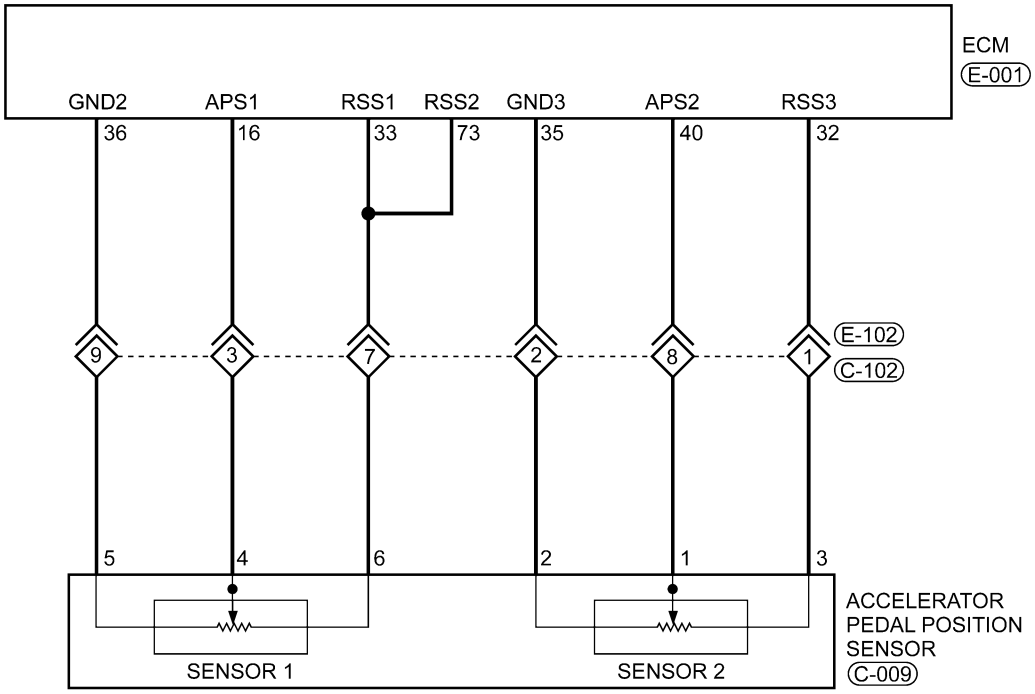

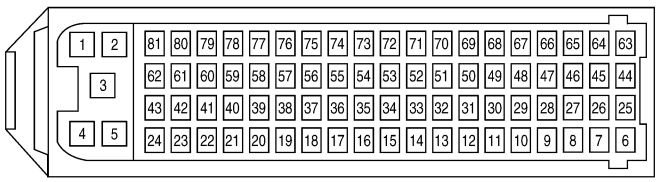

E-001
B

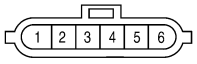

C-009
B

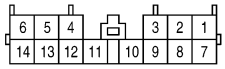

E-102
W

ltsmw030045t

Downloaded from www.Manualslib.com manuals search engine

Check reference values between ECM terminals and ground under the following conditions:

ECM TERMINAL NO.	ITEM	CONDITION		DATA (DC VOLTAGE)
32	Regulated sensor supply 2	Ignition switch: ON	-	Approximately 5 V
38	Electronic throttle control actuator (Position sensor)		• Engine stopped • Accelerator pedal: Fully released	4.24 V
			• Engine stopped • Accelerator pedal: Fully depressed	0.72 V
54	Electronic throttle control actuator		• Engine stopped • Accelerator pedal: Fully released	0.74 V
			• Engine stopped • Accelerator pedal: Fully depressed	4.62 V
78	Sensor (GND)		-	Approximately 0 V
64	Motor 4			0 V or 12 V
65	Motor 3			
66	Motor 2			12 V or 0 V
67	Motor 1			

On Board Diagnostic Logic

- Self-diagnosis detection logic.

DTC NO.	DTC DEFINITION	DTC DETECTION CONDITION	DTC SET CONDITION	POSSIBLE CAUSE
P0221	Throttle Position Sensor (TPS) B performance	Ignition switch on or after engine start	Rationally incorrect voltage is sent to ECM compared with the signals from TPS1 and TPS2.	• Electronic throttle control actuator (TPS1 and TPS2) • Harness or connectors (The sensor signal circuit is open or shorted) • Accelerator pedal position sensor 2 • ECM

DTC Confirmation Procedure:

Before performing the following procedure, confirm that battery voltage is more than 12 V.

- Turn ignition switch off.
- Connect the X-431 scan tool to the Data Link Connector (DLC) - use the most current software available.
- Turn ignition switch on.
- With the scan tool, record and erase stored DTCs in the ECM.
- Start engine and warm it to normal operating temperature then select view DTC.
- If DTC is detected, go to Diagnostic Procedure - Step 1.
- If the DTC is not detected, the DTC condition is intermittent (See Diagnosis & Testing Diagnostic Help in Section 03 Electronic Engine Controls).

NOTE :

While performing electrical diagnosis & testing, always refer to the electrical schematics for specific circuit and component information.

Downloaded from www.Manualslib.com manuals search engine

Diagnostic Procedure

1. CHECK GROUND CONNECTIONS

- Turn ignition switch off.
- Loosen and retighten ground screws on the body (See Ground Inspection in Section 03 Electronic Engine Controls).
- Inspect ground connections E-207 and E-208 mounting position (See Vehicle Wiring Harness Layout - Engine Room Harness (With 1.6L/1.8L Engine) in Section 16 Wiring).

Are the ground connections OK?

Yes >> Go to the next step.

No >> Repair or replace ground connections.

2. CHECK THROTTLE POSITION SENSOR (TPS) ELECTRICAL CONNECTOR

- Disconnect the TPS (1) electrical connector.
- Inspect the electrical connector for damage.

Is the electrical connector OK?

Yes >> Go to the next step.

No >> Repair or replace the electrical connector as necessary.

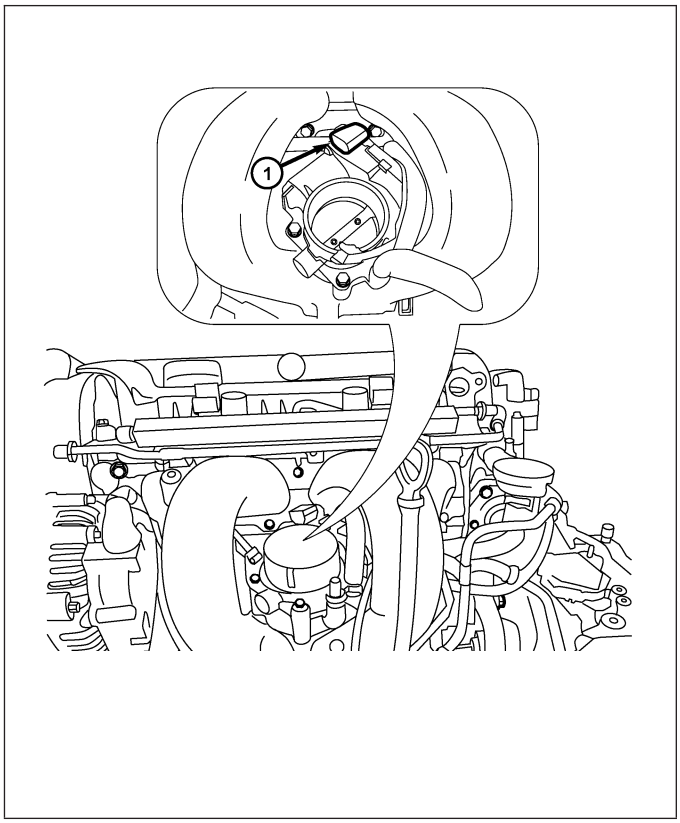

Downloaded from www.Manualslib.com manuals search engine

3. CHECK THE THROTTLE POSITION SENSOR (TPS) POWER SUPPLY CIRCUIT

- Turn ignition switch on.
- Check TPS supply voltage between TPS terminal 3 and ground in the TPS electrical connector E-027.
- Approximately 5 V should exist.

Is the check result normal?

Yes >> Go to step 8.

No >> Go to the next step.

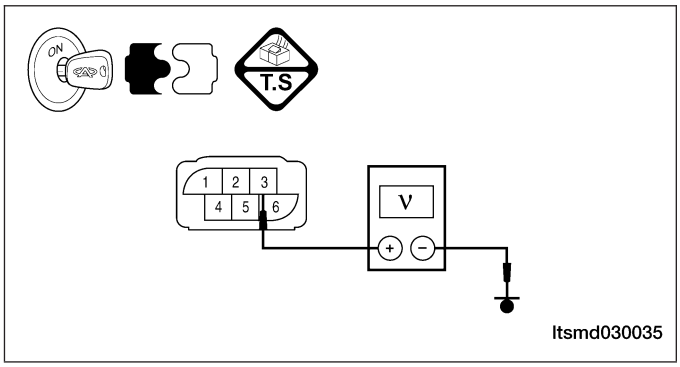

4. CHECK THE TPS POWER SUPPLY CIRCUIT

- Turn ignition switch off.
- Disconnect ECM harness connector.
- Check harness continuity between TPS terminal 3 and ECM terminal 32.
- Continuity should exist.

Is the check result normal?

Yes >> Go to the next step.

No >> Repair or replace circuit for an open.
If the circuit is normal, go to the next step.

5. CHECK THE TPS AND THE ACCELERATOR PEDAL POSITION (APP) SENSOR POWER SUPPLY CIRCUIT

- Check harness for short to power and short to ground between following terminals.

ECM TERMINAL	TPS/APS TERMINAL
32	TPS terminal 3
32	APP sensor terminal 3
33	APP sensor terminal 6

Is the check result normal?

Yes >> Go to the next step.

No >> Repair circuit for short to ground or short to power in harness or connectors.

Downloaded from www.Manualslib.com manuals search engine

6. CHECK THE APP SENSOR

- Connect all harness connectors disconnected.
- Turn ignition switch on.
- Check voltage between ECM terminals 16 (APP sensor 1 signal), 40 (APP sensor 2 signal) and ground under the following conditions:

ECM TERMINAL NO.	APP SENSOR TERMINAL	ITEM	CONDITION		VOLT (DC VOLTAGE)
16	APP sensor terminal 4	Accelerator Pedal Position Sensor 1 (APPS1)	Turn ignition switch on	• Engine stopped • Accelerator pedal: Fully released	0.72 - 0.74 V
				• Engine stopped • Accelerator pedal: Fully depressed	3.95 V
40	APP sensor terminal 1	Accelerator Pedal Position Sensor 2 (APPS2)		• Engine stopped • Accelerator pedal: Fully released	0.36 - 0.37 V
				• Engine stopped • Accelerator pedal: Fully depressed	1.97 V

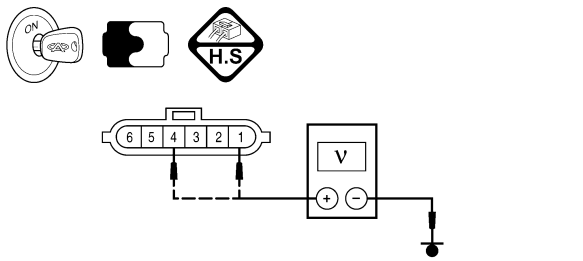

ltsmd030037

Is the check result normal?

Yes >> Go to step 10.

No >> Replace the Accelerator Pedal Assembly (See Accelerator Pedal Position Sensor Removal & Installation in Section 03 Electronic Engine Controls).

7. CHECK THE TPS SIGNAL CIRCUIT FOR AN OPEN AND SHORT

- Turn ignition switch off.
- Disconnect ECM harness connector.
- Check harness continuity between electronic throttle control actuator terminal 5 and ECM terminal 38.
- Continuity should exist.
- Also check harness for a short to power and short to ground.

Is the check result normal?

Yes >> Go to the next step.

No >> Repair circuit for an open or short to power or short to ground in harness or connectors.

Downloaded from www.Manualslib.com manuals search engine

8. CHECK THE TPS SENSOR GROUND CIRCUIT FOR AN OPEN AND SHORT

- Check harness continuity between electronic throttle control actuator terminal 2 and ECM terminal 78.
- Continuity should exist.
- Check harness for short to power and short to ground.

Is the check result normal?

Yes >> Go to the next step.

No >> Repair or replace circuit for an open or short to power or short to ground in harness or connectors.

9. CHECK TPS

- Connect all harness connectors disconnected.
- Turn ignition switch on.
- Check voltage between TPS terminals 6 (TPS1) and ground, terminal 5 (TPS2) and ground under the following conditions:

TPS TERMINAL NO.	ITEM	CONDITION		VOLTAGE (DC VOLTAGE)
5	Throttle Position Sensor 2 (TPS2)	Ignition switch: ON	• Engine stopped • Accelerator pedal: Fully released	4.24 V
			• Engine stopped • Accelerator pedal: Fully depressed	0.72 V
6	Throttle Position Sensor 1 (TPS1)		• Engine stopped • Accelerator pedal: Fully released	0.74 V
			• Engine stopped • Accelerator pedal: Fully depressed	4.62 V

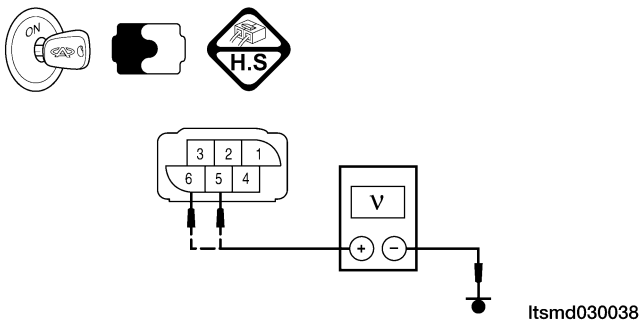

Is the check result normal?

Yes >> Go to the next step.

No >> Replace electronic throttle control actuator, and perform throttle valve position learning.

Downloaded from www.Manualslib.com manuals search engine

10. CHECK DTC

- With the X-431 scan tool, read ECM DTCs.
- Refer to ″DTC Confirmation Procedure″.

Is DTC P0221 still present?

Yes >> Replace the ECM.

NOTE : The Immobilizer control module must be matched to the new ECM (See ECM Removal & Installation in Section 03 Electronic Engine Controls).

No >> The system is now operating properly.
Reassemble the vehicle and road test to verify the customers complaint is repaired.

Downloaded from www.Manualslib.com manuals search engine

P0261 - Cylinder 1 Injector Circuit Low
P0264 - Cylinder 2 Injector Circuit Low
P0267 - Cylinder 3 Injector Circuit Low
P0270 - Cylinder 4 Injector Circuit Low

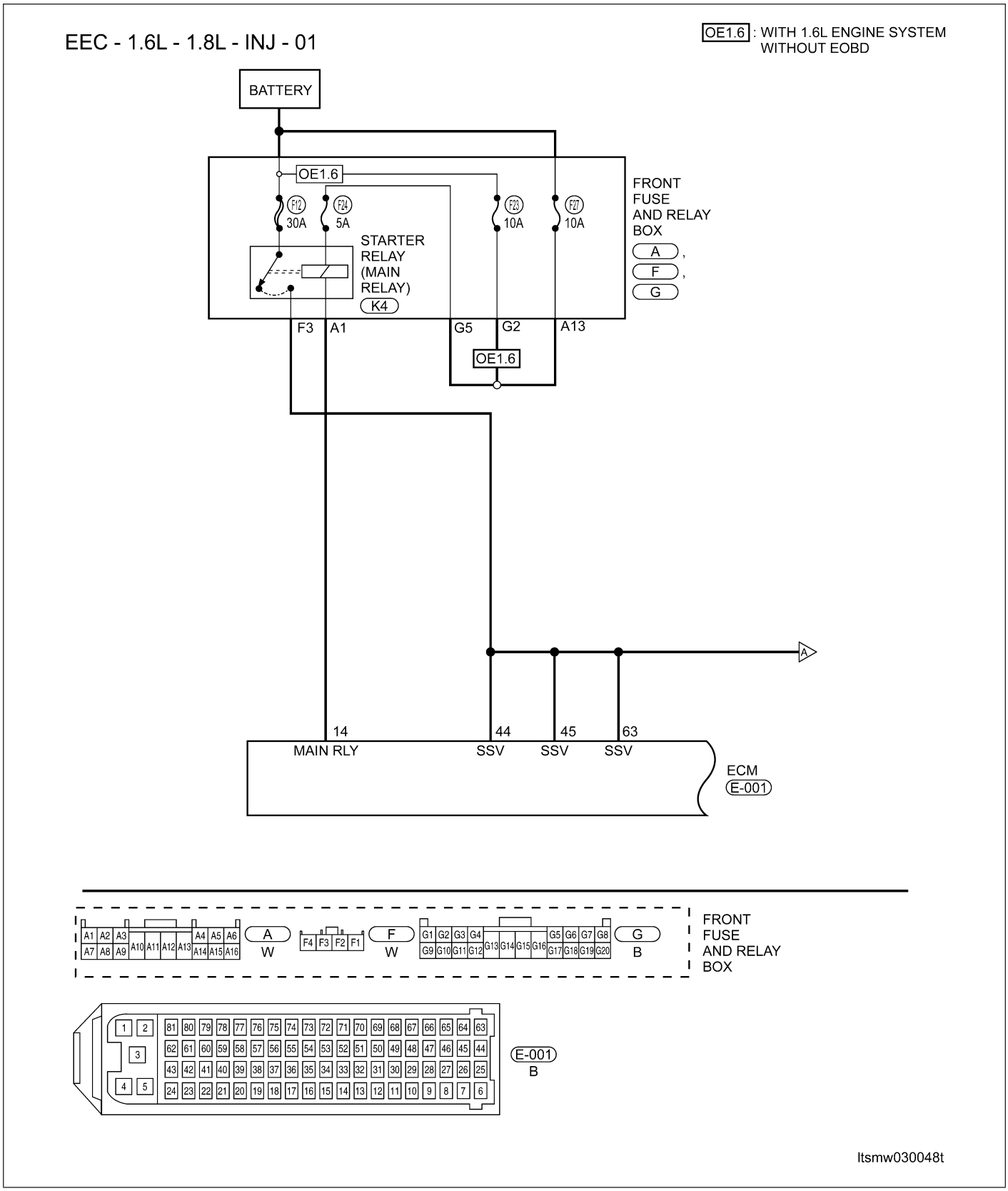

Downloaded from www.Manualslib.com manuals search engine

EEC - 1.6L - 1.8L - INJ - 02

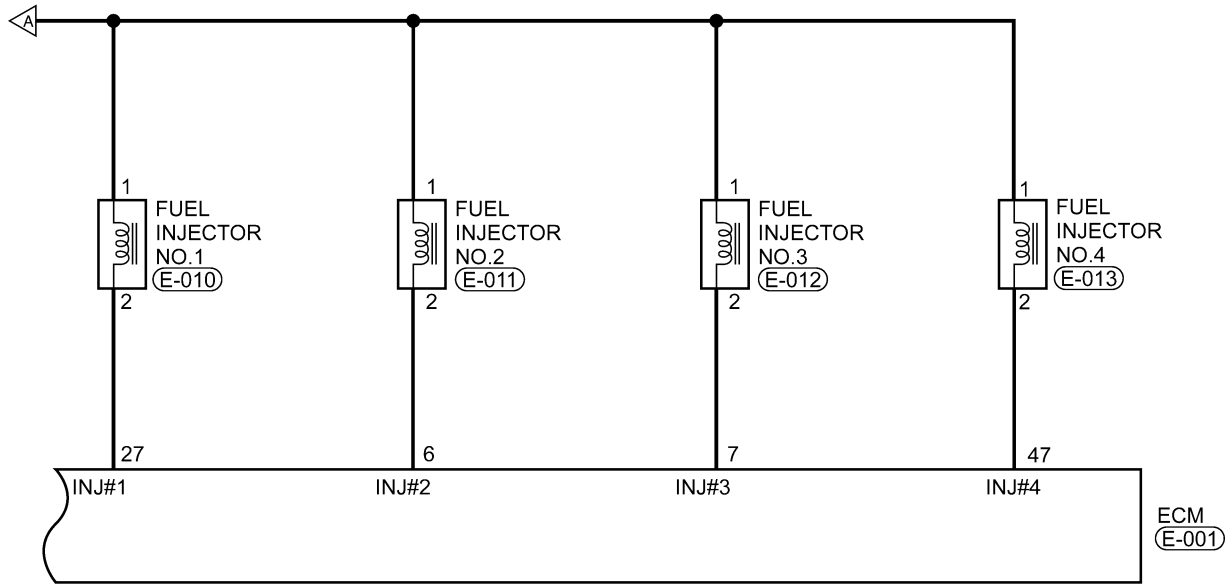

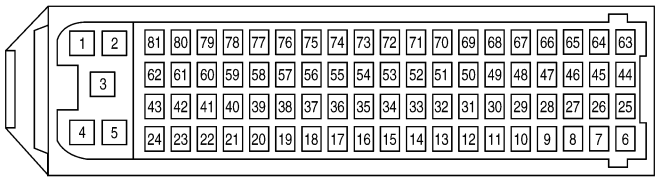

E-001
B

E-010, E-011, E-012, E-013
B B B B

ltsmw030049t

Downloaded from www.Manualslib.com manuals search engine

Check reference values between ECM terminals and ground under the following conditions:

ECM TERMINAL NO.	ITEM	CONDITION	DATA (AVERAGE DC VOLTAGE)
6	Injector 2	• Engine is running • Warm-up condition • Idle • Accelerate suddenly	Voltage: 11 - 14 V
7	Injector 3		
27	Injector 1		
47	Injector 4		

On Board Diagnostic Logic

- Self-diagnosis detection logic.

DTC NO.	DTC DEFINITION	DTC DETECTION CONDITION	POSSIBLE CAUSE
P0261	Cylinder 1 - Injector Circuit Low	Engine is running	• Injector • Harness or connectors • ECM
P0264	Cylinder 2 - Injector Circuit Low		
P0267	Cylinder 3 - Injector Circuit Low		
P0270	Cylinder 4 - Injector Circuit Low		

DTC Confirmation Procedure:

Before performing the following procedure, confirm that battery voltage is more than 12 V.

- Turn ignition switch off.
- Connect the X-431 scan tool to the Data Link Connector (DLC) - use the most current software available.
- Turn ignition switch on.
- With the scan tool, record and erase stored DTCs in the ECM.
- Start engine and warm it to normal operating temperature then select view DTC.
- If DTC is detected, go to Diagnostic Procedure - Step 1.
- If the DTC is not detected, the DTC condition is intermittent (See Diagnosis & Testing Diagnostic Help in Section 03 Electronic Engine Controls).

NOTE :
While performing electrical diagnosis & testing, always refer to the electrical schematics for specific circuit and component information.

Diagnostic Procedure

1. CHECK GROUND CONNECTIONS

- Turn ignition switch off.
- Loosen and retighten ground screws on the body (See Ground Inspection in Section 03 Electronic Engine Controls).
- Inspect ground connections E-207 and E-208 mounting position (See Vehicle Wiring Harness Layout - Engine Room Harness (With 1.6L/1.8L Engine) in Section 16 Wiring).

Are the ground connections OK?

Yes >> Go to the next step.

No >> Repair or replace ground connections.

Downloaded from www.Manualslib.com manuals search engine

2. INSPECTION START

- Start engine.

Is any cylinder ignited?

Yes >> If with the X-431, go to the next step.
If without the X-431, go to step 4.

No >> Go to step 5.

3. PERFORM ACTIVE TEST FUNCTION

- Select ″ACTIVE TEST″ menu.
- Perform injector active test.
- Make sure that each test produces a momentary engine speed drop.

Is the check result normal?

Yes >> Go to step 10.

No >> Go to step 5.

4. CHECK FUNCTION OF INJECTOR

- Listen to injector operating sound one by one.

Do all injectors clicking noise exist?

Yes >> Go to step 10.

No >> Go to the next step.

5. CHECK INJECTOR ELECTRICAL CONNECTOR

- Disconnect the Injector (1) electrical connector.
- Inspect the electrical connector for damage.

Is the electrical connector OK?

Yes >> Go to the next step.

No >> Repair or replace the electrical connector as necessary.

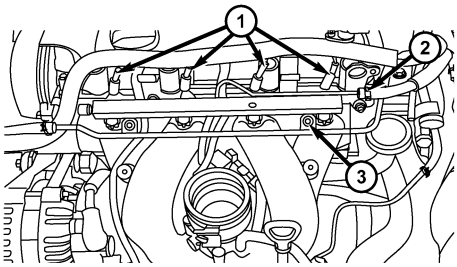

besm040006

Downloaded from www.Manualslib.com manuals search engine

6. CHECK INJECTOR POWER SUPPLY CIRCUIT FOR SHORT TO GROUND

- Turn ignition switch on.
- Check injector supply voltage between sensor terminal and ground in the electrical connector.
- Battery voltage should exist.

Is the check result normal?

Yes >> Go to step 8.

No >> Go to the next step.

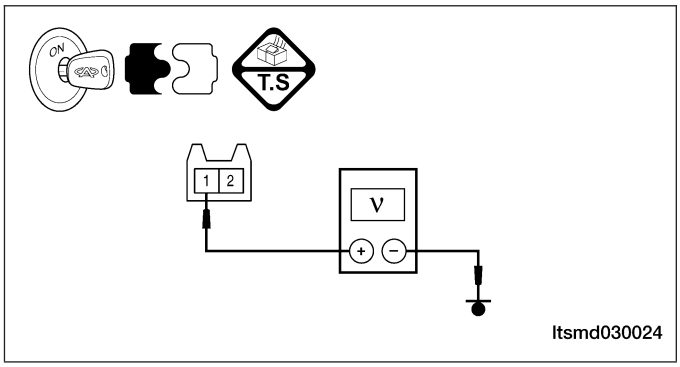

7. DETECT MALFUNCTIONING PART

- Check the following:
  - Front fuse and relay box F3, A13, G5
  - Fuse 12, fuse 24, fuse 27

Without EOBD (1.6L).

- Front fuse and relay box F3, G2, G5
- Fuse 12, Fuse 23, Fuse 24
- harness between injector and fuse

Is the check result normal?

Yes >> With the X-431, check the system, If OK, go to the next step.

No >> Repair malfunctioning parts.

8. CHECK INJECTOR CONTROL CIRCUITS FOR A SHORT

- Check injector control circuit voltage.
- 3.6 V should exist.

Is the check result normal?

Yes >> Go to step 10.

No >> Go to the next step.

Downloaded from www.Manualslib.com manuals search engine

9. DETECT MALFUNCTIONING PART

- Turn ignition switch off.
- Disconnect ECM harness connector.
- Check harness continuity between following terminals.
- Continuity should not exist.

INJECTOR NO.	INJECTOR TERMINAL	GROUND
1	2	Ground
2	2	
3	2	
4	2	

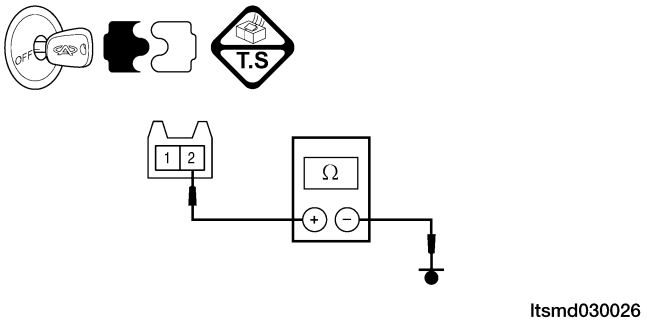

Is the check result normal?

Yes >> Go to the next step.

No >> Repair or replace the circuit for a short in harness or connectors.

10. CHECK INJECTOR RESISTANCE

- Check the fuel injector resistance as shown in the following:

INJECTOR NO.	INJECTOR TERMINAL	RESISTANCE (APPROXIMATELY) Ω (20°C)
1	1 & 2	12
2	1 & 2	
3	1 & 2	
4	1 & 2	

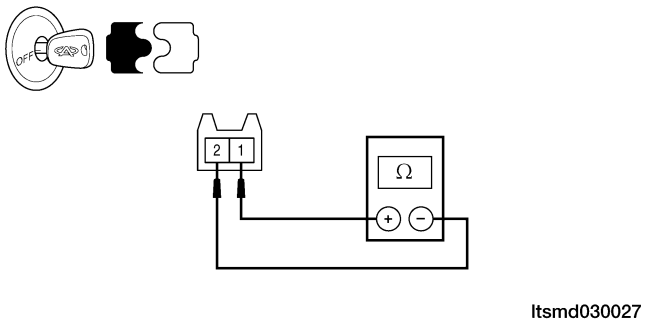

- Check sensor signal output.
- Connect ECM connector.
- Connect injector connectors.
- Check the fuel injector voltage as shown in the following:

TERMINAL NO.	ITEM	CONDITION	DATA (AVERAGE DC VOLTAGE)
6	Injector 2	• Engine is running • Warm-up condition • Idle • Accelerate suddenly	Voltage: 11 - 14 V
7	Injector 3		
27	Injector 1		
47	Injector 4		

Downloaded from www.Manualslib.com manuals search engine

Is the check result normal?

Yes >> Go to the next step.

No >> Replace injector.

11. CHECK DTC

- With the X-431 scan tool, read ECM DTCs.
- Refer to ″DTC Confirmation Procedure″.

Is DTC P0261, P0264, P0267 or P0270 still present?

Yes >> Replace the ECM.

NOTE : The Immobilizer control module must be matched to the new ECM (See ECM Removal & Installation in Section 03 Electronic Engine Controls).

No >> The system is now operating properly.
Reassemble the vehicle and road test to verify the customers complaint is repaired.

Downloaded from www.Manualslib.com manuals search engine

P0262 - Cylinder 1 Injector Circuit High
P0265 - Cylinder 2 Injector Circuit High
P0268 - Cylinder 3 Injector Circuit High
P0271 - Cylinder 4 Injector Circuit High

Injector Circuit High

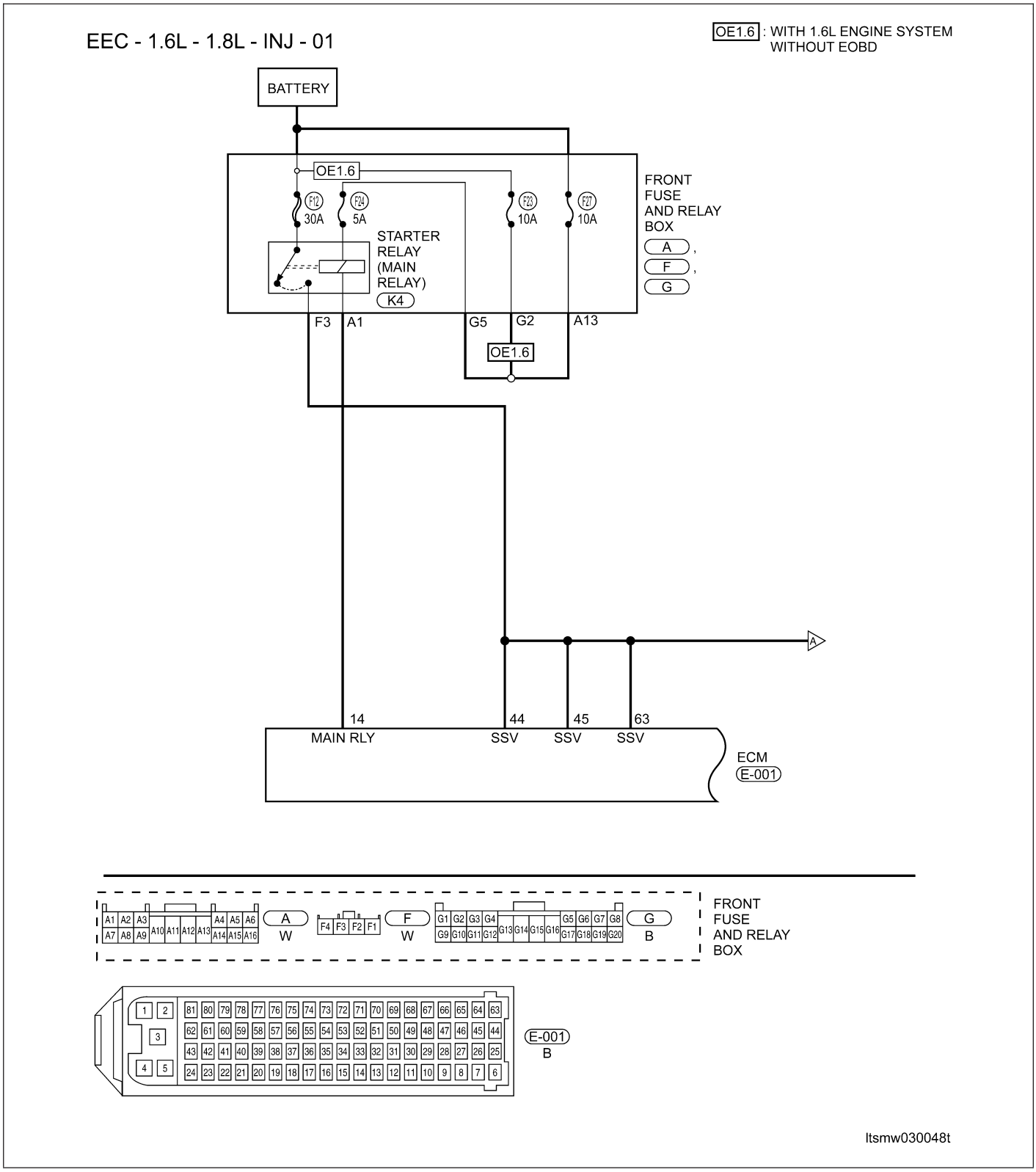

Downloaded from www.Manualslib.com manuals search engine

EEC - 1.6L - 1.8L - INJ - 02

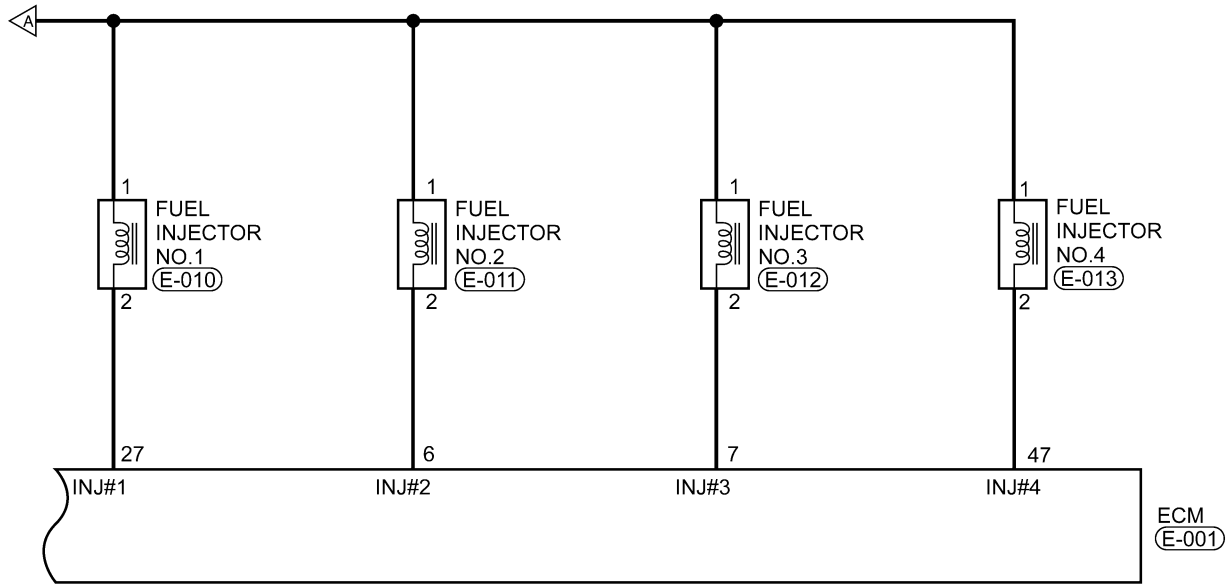

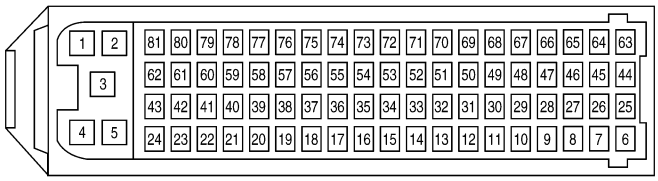

E-001
B

E-010, E-011, E-012, E-013
B B B B

ltsmw030049t

Downloaded from www.Manualslib.com manuals search engine

Check reference values between ECM terminals and ground under the following conditions:

TERMINAL NO.	ITEM	CONDITION	DATA (AVERAGE DC VOLTAGE)
6	Injector 2	• Engine is running • Warm-up condition • Idle • Accelerate suddenly	Voltage: 11 - 14 V
7	Injector 3		
27	Injector 1		
47	Injector 4		

On Board Diagnostic Logic

- Self-diagnosis detection logic.

DTC NO.	DTC DEFINITION	DTC DETECTION CONDITION	POSSIBLE CAUSE
P0262	Cylinder 1 - Injector Circuit High	Engine is running	• Injector • Harness or connectors • ECM
P0265	Cylinder 2 - Injector Circuit High		
P0268	Cylinder 3 - Injector Circuit High		
P0271	Cylinder 4 - Injector Circuit High		

DTC Confirmation Procedure:

Before performing the following procedure, confirm that battery voltage is more than 12 V.

- Turn ignition switch off.
- Connect the X-431 scan tool to the Data Link Connector (DLC) - use the most current software available.
- Turn ignition switch on.
- With the scan tool, record and erase stored DTCs in the ECM.
- Start engine and warm it to normal operating temperature then select view DTC.
- If DTC is detected, go to Diagnostic Procedure - Step 1.
- If the DTC is not detected, the DTC condition is intermittent (See Diagnosis & Testing Diagnostic Help in Section 03 Electronic Engine Controls).

NOTE :
While performing electrical diagnosis & testing, always refer to the electrical schematics for specific circuit and component information.

Diagnostic Procedure

1. CHECK GROUND CONNECTIONS

- Turn ignition switch off.
- Loosen and retighten ground screws on the body (See Ground Inspection in Section 03 Electronic Engine Controls).
- Inspect ground connections E-207 and E-208 mounting position (See Vehicle Wiring Harness Layout - Engine Room Harness (With 1.6L/1.8L Engine) in Section 16 Wiring).

Are the ground connections OK?

Yes >> Go to the next step.

No >> Repair or replace ground connections.

Downloaded from www.Manualslib.com manuals search engine

2. INSPECTION START

- Start engine.

Is any cylinder ignited?

Yes >> If with the X-431, go to the next step.
If without the X-431, go to step 4.

No >> Go to step 5.

3. PERFORM ACTIVE TEST FUNCTION

- Select ″ACTIVE TEST″ menu.
- Perform injector active test.
- Make sure that each test produces a momentary engine speed drop.

Is the check result normal?

Yes >> Go to step 10.

No >> Go to step 5.

4. CHECK FUNCTION OF INJECTOR

- Listen to injector operating sound one by one.

Do all injectors clicking noise exist?

Yes >> Go to step 10.

No >> Go to the next step.

5. CHECK INJECTOR ELECTRICAL CONNECTOR

- Disconnect the Injector (1) electrical connector.
- Inspect the electrical connector for damage.

Is the electrical connector OK?

Yes >> Go to the next step.

No >> Repair or replace the electrical connector as necessary.

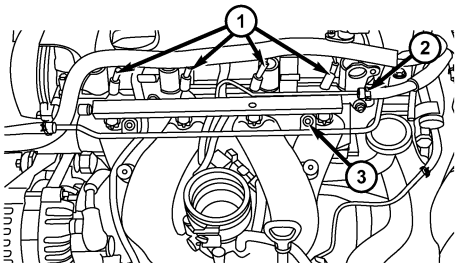

besm040006

Downloaded from www.Manualslib.com manuals search engine

6. CHECK INJECTOR POWER SUPPLY CIRCUIT FOR SHORTED

- Turn ignition switch on.
- Check injector supply voltage between sensor terminal and ground in the electrical connector.
- Battery voltage should exist.

Is the check result normal?

Yes >> Go to step 8.

No >> Go to the next step.

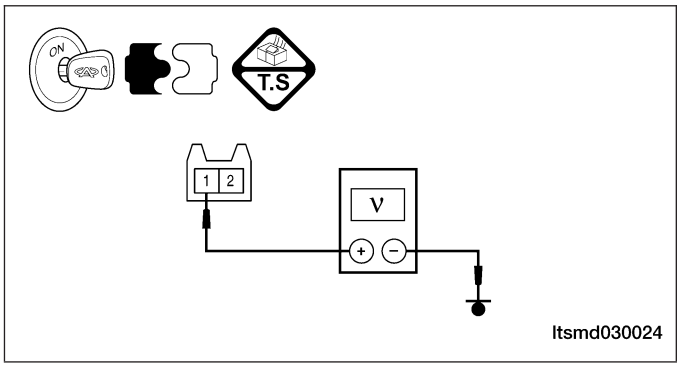

7. DETECT MALFUNCTIONING PART

- Check the following:
  - Front fuse and relay box F3, A13, G5
  - Fuse 12, fuse 24, fuse 27

Without EOBD (1.6L)

  - Front fuse and relay box F3, G2, G5
  - Fuse 12, Fuse 23, Fuse 24
- Check harness for open or shorted between injector and fuse.

Is the check result normal?

Yes >> With the X-431, check the system, If OK, go to the next step.

No >> Repair or replace malfunctioning parts.

8. CHECK INJECTOR CONTROL CIRCUITS FOR A SHORT

- Check injector control circuit voltage.
- 3.6 V should exist.

Is the check result normal?

Yes >> Go to step 10.

No >> Go to the next step.

Downloaded from www.Manualslib.com manuals search engine

9. DETECT MALFUNCTIONING PART

- Turn ignition switch off.
- Disconnect ECM harness connector.
- Check the injector control circuits for short to power supply circuits.
- Check the following.
- Voltage should not exist.

INJECTOR NO.	POWER SUPPLY CIRCUIT	INJECTOR TERMINAL
1	Power supply circuit	2
2		2
3		2
4		2

Is the check result normal?

Yes >> Go to the next step.

No >> Repair circuit for an open or short in harness or connectors.

10. CHECK INJECTOR RESISTANCE

- Check resistance as table shown.
- Check the fuel injector resistance as shown in the following:

INJECTOR NO.	INJECTOR TERMINAL	RESISTANCE (APPROXIMATELY) Ω (20°C)
1	1 & 2	16
2	1 & 2	
3	1 & 2	
4	1 & 2	

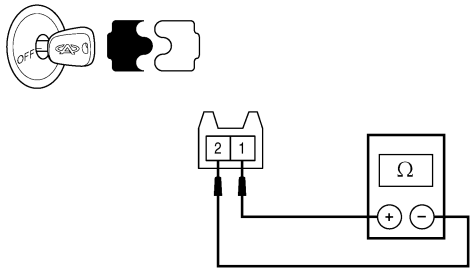

ltsmd030027

- Check signal output.
- Connect ECM connector.
- Connect injector connectors.
- Check the fuel injector voltage as shown in the following:

TERMINAL NO.	ITEM	CONDITION	DATA (AVERAGE DC VOLTAGE)
6	Injector 2	• Engine is running • Warm-up condition • Idle • Accelerate suddenly	Voltage: 11 - 14 V
7	Injector 3		
27	Injector 1		
47	Injector 4		

Is the check result normal?

Yes >> Go to the next step.

No >> Replace injector.

Downloaded from www.Manualslib.com manuals search engine

11. CHECK DTC

- With the X-431 scan tool, read ECM DTCs.
- See "DTC Confirmation Procedure".

Is DTC P0262, P0265, P0268 or P0271 still present?

Yes >> Replace the ECM.

NOTE : The Immobilizer control module must be matched to the new ECM (See ECM Removal & Installation in Section 03 Electronic Engine Controls).

No >> The system is now operating properly.
Reassemble the vehicle and road test to verify the customers complaint is repaired.

Downloaded from www.Manualslib.com manuals search engine

P0321 - Distributor Engine Speed In Phase Circuit Performance

EEC - 1.6L - 1.8L - POS - 01

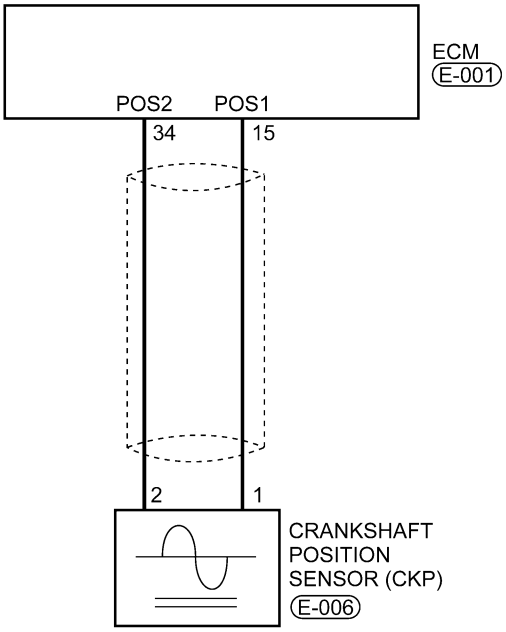

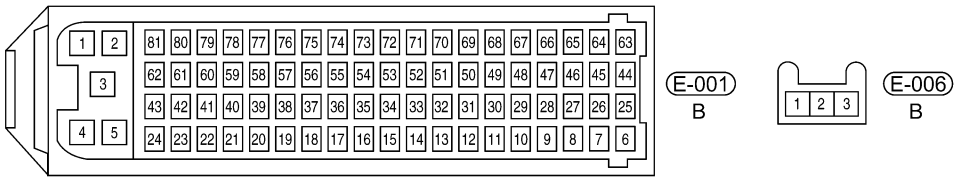

ltsmw030046t

Downloaded from www.Manualslib.com manuals search engine

Check reference values between ECM terminals and ground under the following conditions:

ECM TERMINAL NO.	ITEM	CONDITION	DATA (AVERAGE DC VOLTAGE)
15	Crankshaft Position (CKP) sensor	• Ignition switch: ON • Engine: Not cranking	3 V
34			

On Board Diagnostic Logic

- Self-diagnosis detection logic.

DTC NO.	DTC DEFINITION	DTC DETECTION CONDITION	DTC SET CONDITION	POSSIBLE CAUSE
P0321	Distributor engine speed in phase circuit performance	Engine is running	ECM detected that the input signal is out of the acceptable range.	• CKP sensor • Crankshaft signal plate • Harness or connectors • ECM

DTC Confirmation Procedure:

Before performing the following procedure, confirm that battery voltage is more than 12 V.

- Turn ignition switch off.
- Connect the X-431 scan tool to the Data Link Connector (DLC) - use the most current software available.
- Turn ignition switch on.
- With the scan tool, record and erase stored DTCs in the ECM.
- Crank engine for a few seconds and run it for a few seconds then select view DTC.
- If DTC is detected, go to Diagnostic Procedure - Step 1.
- If the DTC is not detected, the DTC condition is intermittent (See Diagnosis & Testing Diagnostic Help in Section 03 Electronic Engine Controls).

NOTE :
While performing electrical diagnosis & testing, always refer to the electrical schematics for specific circuit and component information.

Diagnostic Procedure

1. CHECK GROUND CONNECTIONS

- Turn ignition switch off.
- Loosen and retighten ground screws on the body (See Ground Inspection in Section 03 Electronic Engine Controls).
- Inspect ground connections E-207 and E-208 mounting position (See Vehicle Wiring Harness Layout - Engine Room Harness (With 1.6L/1.8L Engine) in Section 16 Wiring).

Are the ground connections OK?

Yes >> Go to the next step.

No >> Repair or replace ground harness or connections.

Downloaded from www.Manualslib.com manuals search engine

2. CHECK CRANKSHAFT POSITION (CKP) SENSOR ELECTRICAL CONNECTOR

- Disconnect the Injector (1) electrical connector.
- Inspect the electrical connector for damage.

Is the electrical connector OK?

Yes >> Go to the next step.

No >> Repair or replace the electrical connector as necessary.

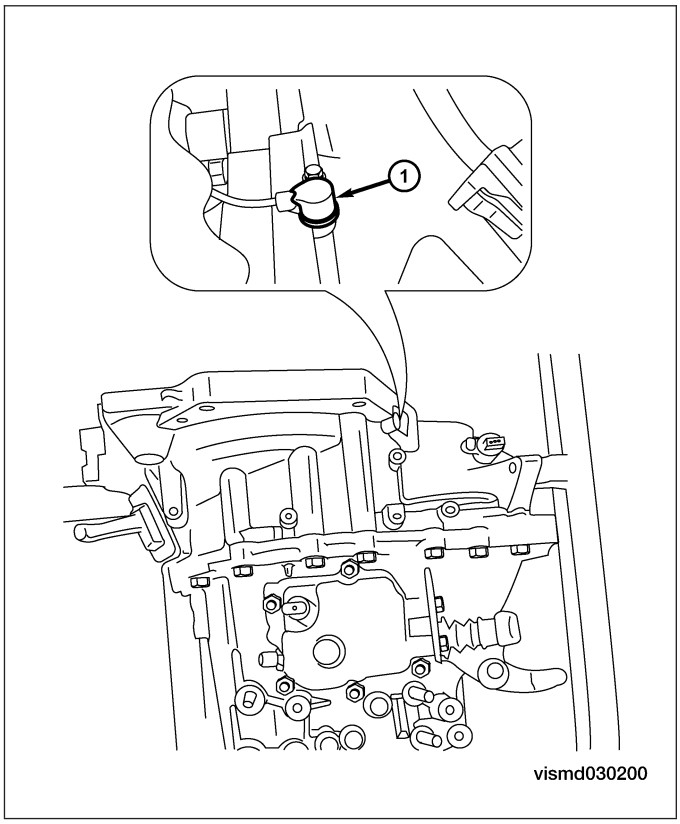

3. CHECK CRANKSHAFT POSITION (CKP) SENSOR REFERENCE VOLTAGE

- Turn ignition switch on.
- Check CKP sensor supply voltage between sensor connector E-006, terminal 1 and ground, terminal 2 and ground in the sensor electrical connector.
- 3 V should exist.

Is the check result normal?

Yes >> Go to step 5.

No >> Go to the next step.

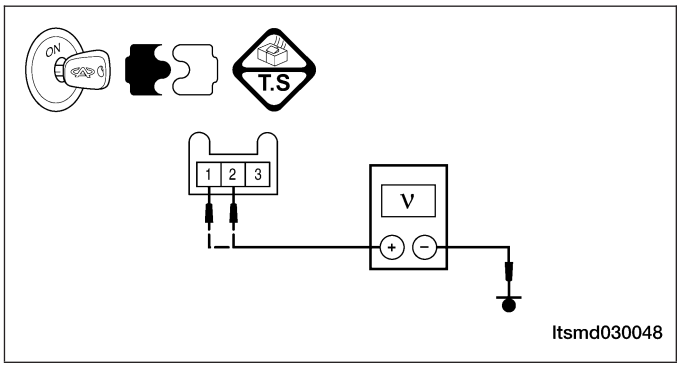

Downloaded from www.Manualslib.com manuals search engine

4. DETECT MALFUNCTIONING PART

- Check harness for an open or short between CKP sensor and ECM.

Is the check result normal?

Yes >> Replace the ECM.

NOTE : The Immobilizer control module must be matched to the new ECM (See ECM Removal & Installation in Section 03 Electronic Engine Controls).

No >> Repair circuit for open or short in harness or connectors.

5. CHECK CKP SENSOR SIGNAL WAVE PATTERN

- Connect ECM connector.
- Connect CKP sensor connector.
- Check sensor output signal when engine is running.

	CKP SENSOR SIGNAL
ENGINE ANALYZER (KES-200)	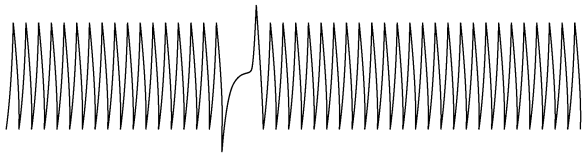 vismd030002

Is the CKP sensor output signal normal?

Yes >> Go to step 9.

No >> Go to the next step.

Downloaded from www.Manualslib.com manuals search engine

6. CHECK CKP SENSOR

- Check resistance as table shown.
- Remove the sensor.
- Visually check the sensor for chipping.

TERMINAL NO.	RESISTANCE Ω (25°C)	
1 & 2	Approximately 860 Ω	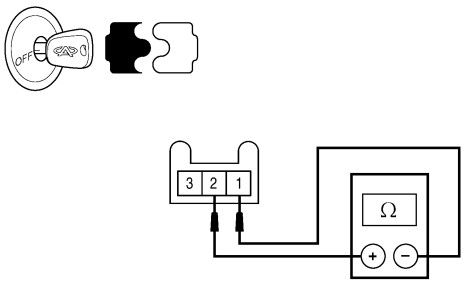 Itsmd030049

Is the check result normal?

Yes >> Replace the CKP sensor with a known good CKP sensor.
Monitor the CKP sensor signal on the KES-200 screen.
– If the CKP sensor signals were normal, the system is OK.
– If the CKP sensor signals were still irregular or missing, go to step 7.

No >> Replace or clear CKP sensor.

7. CHECK INSTALLED CLEARANCE

- Check the installed clearance (See Crankshaft Position (CKP) Sensor Removal & Installation in Section 08 Transaxle & Transfer Case).
- 0.8 - 1.2 mm should exist.

Is the check result normal?

Yes >> Go to the next step.

No >> Reinstall CKP sensor.

8. CHECK GEAR TOOTH

- Visually check for chipping signal plate gear tooth.

Is the check result normal?

Yes >> Go to the next step.

No >> Replace the signal plate

Downloaded from www.Manualslib.com manuals search engine

9. CHECK DTC

- With the X-431 scan tool, read ECM DTCs.
- Refer to ″DTC Confirmation Procedure″.

Is DTC P0321 still present?

Yes >> Replace the ECM.

NOTE : The Immobilizer control module must be matched to the new ECM (See ECM Removal & Installation in Section 03 Electronic Engine Controls).

No >> The system is now operating properly.
Reassemble the vehicle and road test to verify the customers complaint is repaired.

Downloaded from www.Manualslib.com manuals search engine

P0324 - Knock Control System Error

EEC - 1.6L - 1.8L - KNK - 01

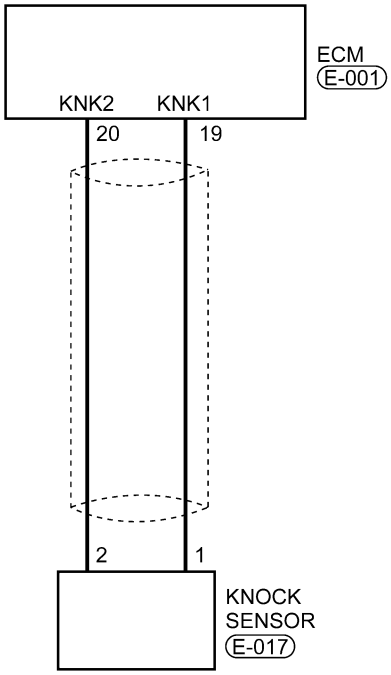

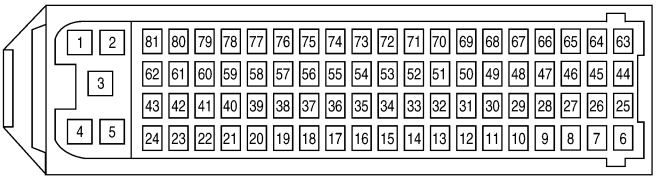

E-001
B

E-017
B

ltsmw030047t

Downloaded from www.Manualslib.com manuals search engine

Check reference values between ECM terminals and ground under the following conditions:

ECM TERMINAL NO.	ITEM	TEST METHOD	DATA (AVERAGE DC VOLTAGE)
19	Knock sensor 1	• Test Method 1: Knock at cylinder with rubber hammer • Test Method 2: Knock at sensor slightly	Output signal voltage should exist.
20	Knock sensor 2		

On Board Diagnostic Logic

- Self-diagnosis detection logic.

DTC NO.	DTC DEFINITION	DTC SET CONDITION	POSSIBLE CAUSE
P0324	Knock control system error	ECM detected that the input signal is out of the acceptable range.	• Knock sensor • Harness or connectors • ECM

DTC Confirmation Procedure:

Before performing the following procedure, confirm that battery voltage is more than 12 V.
- Turn ignition switch off.
- Connect the X-431 scan tool to the Data Link Connector (DLC) - use the most current software available.
- Turn ignition switch on.
- With the scan tool, record and erase stored DTCs in the ECM.
- Run engine for a while then select view DTC.
- If DTC is detected, go to Diagnostic Procedure - Step 1.
- If the DTC is not detected, the DTC condition is intermittent (See Diagnostic Help in Section 03 Electronic Engine Controls).

NOTE :
While performing electrical diagnosis & testing, always refer to the electrical schematics for specific circuit and component information.

Diagnostic Procedure

1. CHECK GROUND CONNECTIONS

- Turn ignition switch off.
- Loosen and retighten ground screws on the body (See Ground Inspection in Section 03 Electronic Engine Controls).
- Inspect ground connections E-207 and E-208 mounting position (See Vehicle Wiring Harness Layout - Engine Room Harness (With 1.6L/1.8L Engine) in Section 16 Wiring).

Are the ground connections OK?

Yes >> Go to the next step.

No >> Repair or replace ground harness or connections.

Downloaded from www.Manualslib.com manuals search engine

2. CHECK KNOCK SENSOR RESISTANCE

- Disconnect knock sensor harness connector.
- Check resistance between knock sensor connector E-017, terminal 1 and terminal 2.
- The resistance should be above 1 MΩ.

Is the check result normal?

Yes >> Go to the next step.

No >> Replace knock sensor.

3. CHECK KNOCK SENSOR INPUT SIGNAL CIRCUIT

- Disconnect ECM harness connector.
- Check harness continuity between sensor connector E-017, terminal 1 and ECM terminal 19, sensor terminal 2 and ECM terminal 20.

ECM CONNECTOR TERMINAL	KNOCK SENSOR CONNECTOR TERMINAL
19	1
20	2

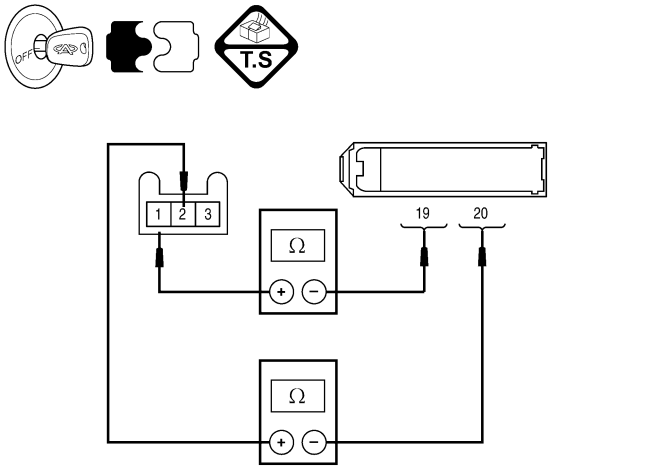

- Continuity should exist.
- Check harness for short to ground and short to power.

Is the check result normal?

Yes >> Go to step 4.

No >> Repair circuit for an open or short in harness or connectors.

Downloaded from www.Manualslib.com manuals search engine

4. CHECK KNOCK SENSOR SIGNAL

- Check knock sensor (1) output signal as table shown.

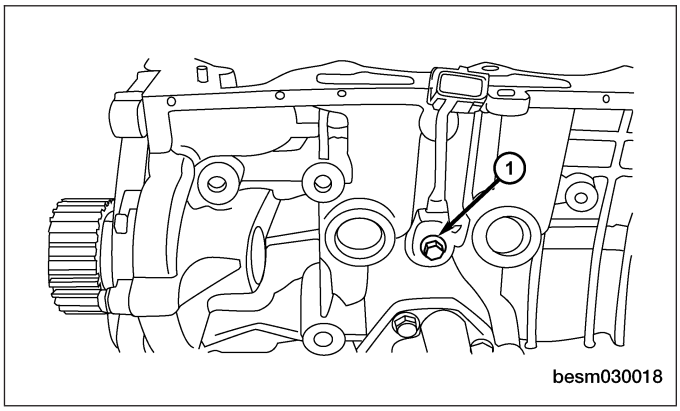

- Set the digital multimeter to the voltage range.

KNOCK SENSOR TERMINAL NO.	TEST METHOD	
1 & 2	Test Method 1: Knock at cylinder with rubber hammer	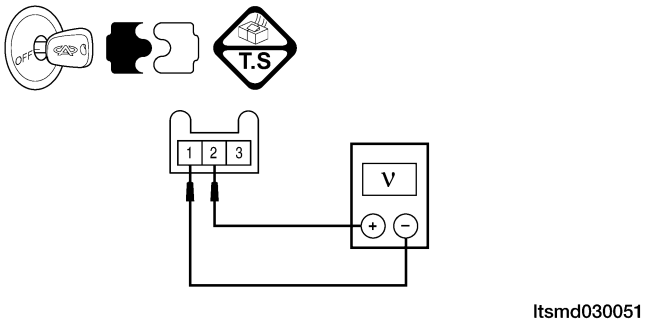
	Test Method 2: Knock at sensor slightly	

- Output signal voltage should exist.

Is the check result normal?

Yes >> Go to the next step.

No >> Replace knock sensor.

5. CHECK DTC

- With the X-431 scan tool, read ECM DTCs.
- Refer to ″DTC Confirmation Procedure″.

Is DTC P0324 still present?

Yes >> Replace the ECM.

NOTE : The Immobilizer control module must be matched to the new ECM (See ECM Removal & Installation in Section 03 Electronic Engine Controls).

No >> The system is now operating properly.
Reassemble the vehicle and road test to verify the customers complaint is repaired.

Downloaded from www.Manualslib.com manuals search engine

P0343 - Camshaft Position Sensor Circuit High Input

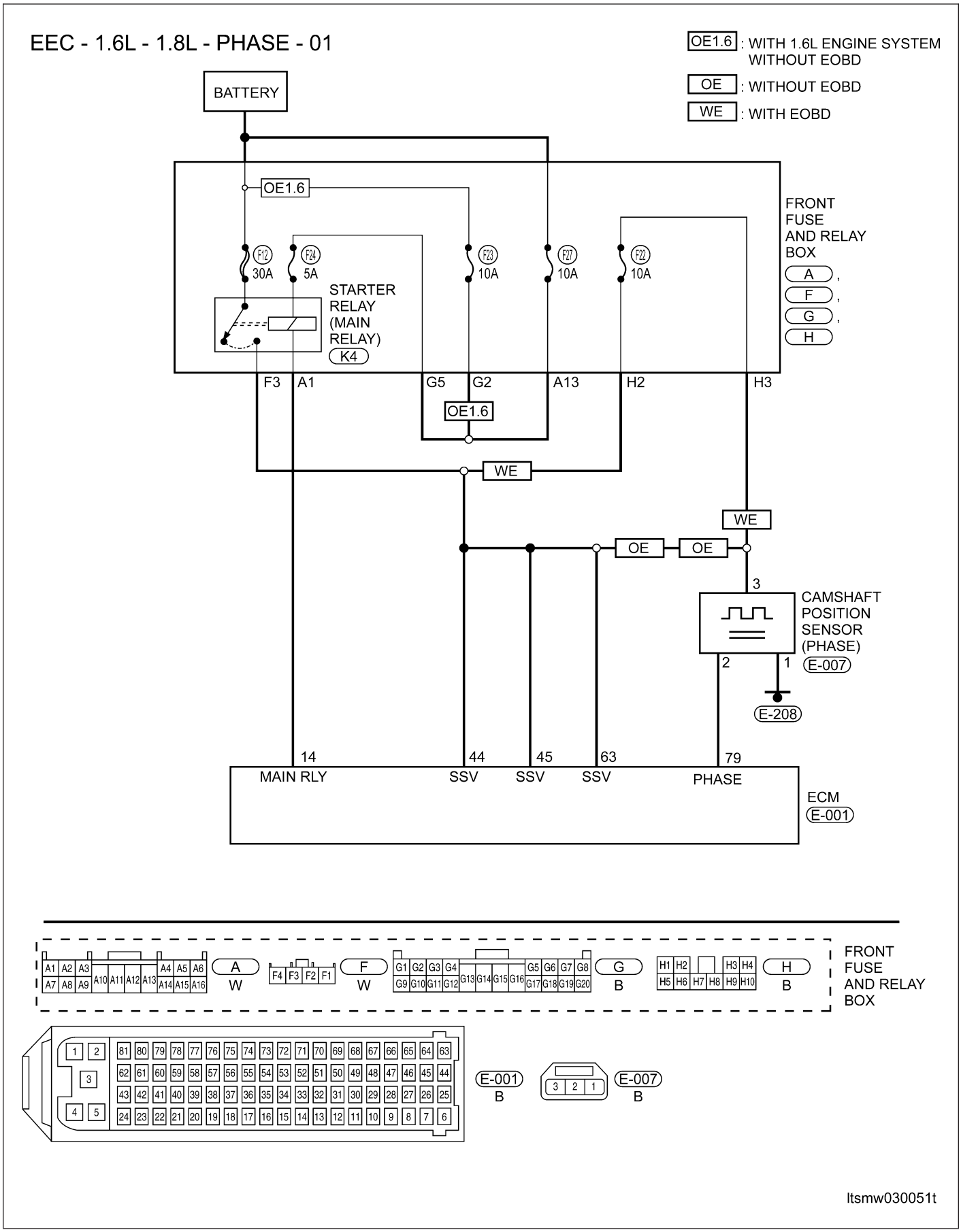

Downloaded from www.Manualslib.com manuals search engine

Check reference values between ECM terminals and ground under the following conditions:

ECM TERMINAL NO.	ITEM	CONDITION	VOLT (AVERAGE DC VOLTAGE)
79	Camshaft Position (CMP) sensor	• Ignition switch: ON • Engine: Not cranking	11 V

On Board Diagnostic Logic

- Self-diagnosis detection logic.

DTC NO.	DTC DEFINITION	DTC DETECTION CONDITION	DTC SET CONDITION	POSSIBLE CAUSE
P0343	Camshaft Position (CMP) sensor circuit high input	Engine is running	ECM detected that the input signal is out of the acceptable range.	• CMP sensor • Camshaft • Harness or connectors • ECM

DTC Confirmation Procedure:

Before performing the following procedure, confirm that battery voltage is more than 12 V.

- Turn ignition switch off.
- Connect the X-431 scan tool to the Data Link Connector (DLC) - use the most current software available.
- Turn ignition switch on.
- With the scan tool, record and erase stored DTCs in the ECM.
- Run engine for a while then select view DTC.
- If DTC is detected, go to Diagnostic Procedure - Step 1.
- If the DTC is not detected, the DTC condition is intermittent (See Diagnosis & Testing Diagnostic Help in Section 03 Electronic Engine Controls).

NOTE :
While performing electrical diagnosis & testing, always refer to the electrical schematics for specific circuit and component information.

Diagnostic Procedure

1. CHECK GROUND CONNECTIONS

- Turn ignition switch off.
- Loosen and retighten ground screws on the body (See Ground Inspection in Section 03 Electronic Engine Controls).
- Inspect ground connections E-207 and E-208 mounting position (See Vehicle Wiring Harness Layout - Engine Room Harness (With 1.6L/1.8L Engine) in Section 16 Wiring).

Are the ground connections OK?

Yes >> Go to the next step.

No >> Repair or replace ground harness or connections.

Downloaded from www.Manualslib.com manuals search engine

2. CHECK CAMSHAFT POSITION (CMP) SENSOR ELECTRICAL CONNECTOR

- Disconnect the CMP sensor (1) electrical connector.
- Inspect the electrical connector for damage.

Is the electrical connector OK?

Yes >> Go to the next step.

No >> Repair or replace the electrical connector as necessary.

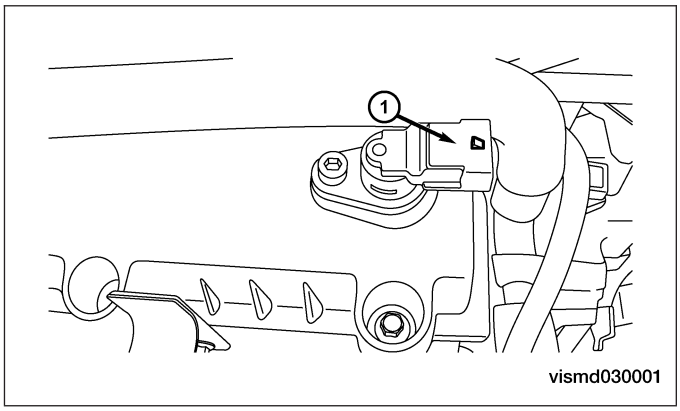

3. CHECK THE CAMSHAFT POSITION SENSOR POWER SUPPLY CIRCUIT FOR AN OPEN AND SHORT

- Turn ignition switch on.
- Check CMP sensor supply voltage between sensor connector E-007, terminal 3 and ground in the sensor electrical connector.
- 12 V should exist.

Is the check result normal?

Yes >> Go to step 5.

No >> Go to the next step.

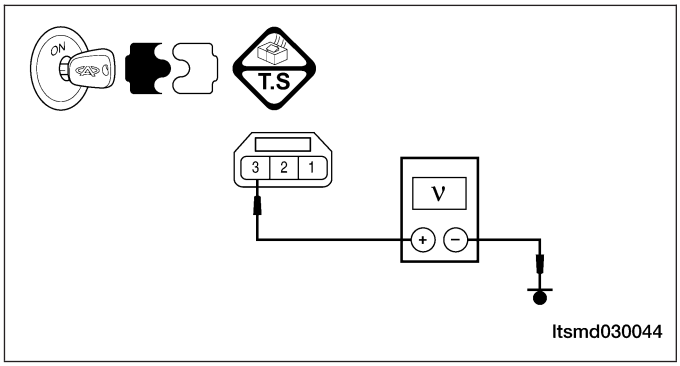

4. DETECT MALFUNCTIONING PART

- Check harness for an open or short between EVAP canister control valve and fuse.
- Check the following:

Without EOBD (1.6L)

– Front fuse and relay box F3, A1, G2, G5
– Fuse 23, fuse 24, fuse 12

Without EOBD

– Front fuse and relay box F3, A1, A13, G2, G5
– Fuse 23, fuse 24, fuse 12, fuse 27

WITH EOBD

– Front fuse and relay box F3, A1, A13, G5, H2, H3
– Fuse 22, fuse 24, fuse 12, fuse 27

Is the check result normal?

Yes >> Go to the next step.

No >> Repair or replace the malfunctioning parts.

Downloaded from www.Manualslib.com manuals search engine

5. CHECK THE CMP SENSOR GROUND CIRCUIT FOR AN OPEN OR SHORT

- Turn ignition switch off.
- Check harness continuity between CMP sensor terminal 1 and ground.
- Continuity should exist.
- Check harness for short to power.

Is the check result normal?

Yes >> Go to the next step.

No >> Repair or replace circuit for an open or short to power in harness or connectors.

6. CHECK THE CMP SENSOR INPUT SIGNAL CIRCUIT FOR OPEN OR SHORT TO POWER

- Turn ignition switch on.
- Check voltage between CMP sensor terminal 2 and ground.
- 11 V should exist.

Is the check result normal?

Yes >> Go to the next step.

No >> Repair or replace open circuit or short to power in harness or connectors.
If circuit is normal, go to the next step.

7. CHECK CMP SENSOR SIGNAL

- Connect CMP sensor connector.
- Check signal voltage between CMP sensor terminal 2 and ground when engine is running.
- Approximately 6 V square wave signal should exist.

	CMP SENSOR SIGNAL
ENGINE ANALYZER (KES-200)	vismd030003

Is the CMP output signal normal?

Yes >> Go to step 10.

No >> Go to the next step.

Downloaded from www.Manualslib.com manuals search engine

8. CHECK CMP SENSOR

- Check resistance as table shown.
- Remove the sensor.
- Visually check and clean the sensor for chipping.

TERMINAL NO.	RESISTANCE Ω (25°C)
1 & 2	Except 0 or ∞
1 & 3	
2 & 3	

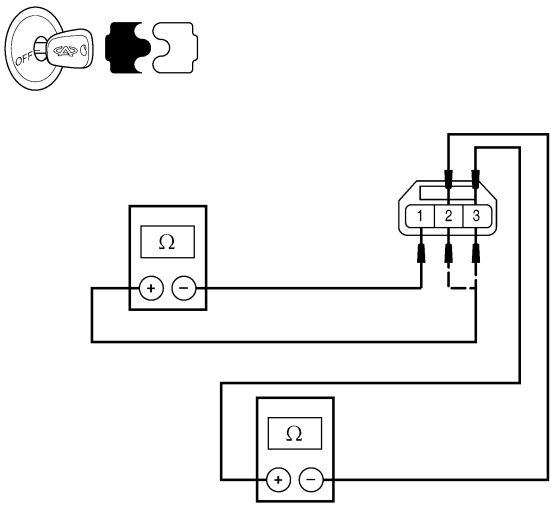

Is the check result normal?

Yes >> Replace the CMP sensor with a known good CMP sensor.
Monitor the CMP sensor signal on the KES-200 screen.
– If the CMP sensor signals were normal, the system is OK.
– If the CMP sensor signals were still irregular or missing, go to Step 9.

No >> Replace CMP sensor.

9. CHECK INSTALLED CLEARANCE

- Check the installed clearance (See CMP Sensor Removal & Installation in Section 03 Electronic Engine Controls).
- 0.8 - 1.2 mm should exist.

Is the check result normal?

Yes >> Go to the next step.

No >> Reinstall CMP sensor.

10. CHECK CAMSHAFT

- Check the following:
  – Accumulation of debris to the signal plate of camshaft rear end
  – Chipping signal plate of camshaft rear end

Is the check result normal?

Yes >> Go to the next step.

No >> Remove debris and clean the signal plate of camshaft rear end or replace camshaft.

Downloaded from www.Manualslib.com manuals search engine

11. CHECK DTC

- With the X-431 scan tool, read ECM DTCs.
- Refer to ″DTC Confirmation Procedure″.

Is DTC P0343 still present?

Yes >> Replace the ECM.

NOTE : The Immobilizer control module must be matched to the new ECM (See ECM Removal & Installation in Section 03 Electronic Engine Controls).

No >> The system is now operating properly.
Reassemble the vehicle and road test to verify the customers complaint is repaired.

Downloaded from www.Manualslib.com manuals search engine

P0444 - Evaporative Emission System Purge Control Valve Circuit Open

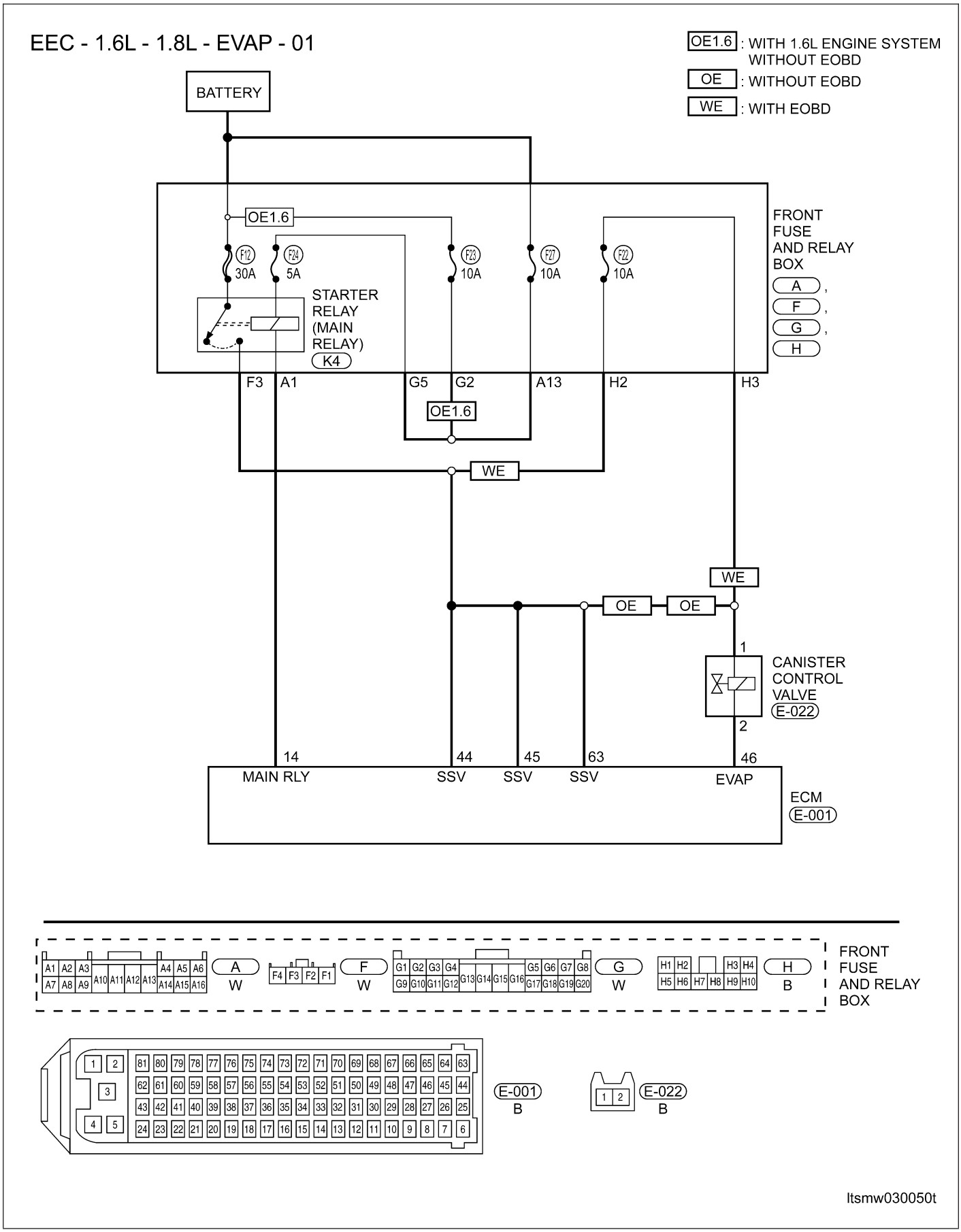

Downloaded from www.Manualslib.com manuals search engine

Check reference values between ECM terminals and ground under the following conditions:

ECM TERMINAL NO.	ITEM	CONDITION	X-431 DATA STREAM
46	Canister control valve	When engine is running	0 % - 99.9 %

- Self-diagnosis detection logic.

DTC NO.	DTC DEFINITION	DTC DETECTION CONDITION	DTC SET CONDITION	POSSIBLE CAUSE
P0444	Evaporative emission system purge control valve circuit open	Engine is running	ECM detected that the improper voltage signal is sent to ECM.	• EVAP canister control valve • Harness or connectors • ECM

DTC Confirmation Procedure:

Before performing the following procedure, confirm that battery voltage is more than 12 V.
- Turn ignition switch off.
- Connect the X-431 scan tool to the Data Link Connector (DLC) - use the most current software available.
- Turn ignition switch on.
- With the scan tool, record and erase stored DTCs in the ECM.
- Start engine and warm it up to the normal operating temperature then select view DTC.
- If DTC is detected, go to Diagnostic Procedure - Step 1.
- If the DTC is not detected, the DTC condition is intermittent (See Diagnosis & Testing Diagnostic Help in Section 03 Electronic Engine Controls).

NOTE :
While performing electrical diagnosis & testing, always refer to the electrical schematics for specific circuit and component information.

Diagnostic Procedure

1. CHECK GROUND CONNECTIONS

- Turn ignition switch off.
- Loosen and retighten ground screws on the body (See Ground Inspection in Section 03 Electronic Engine Controls).
- Inspect ground connections E-207 and E-208 mounting position (See Vehicle Wiring Harness Layout - Engine Room Harness (With 1.6L/1.8L Engine) in Section 16 Wiring).

Are the ground connections OK?

Yes >> Go to the next step.

No >> Repair or replace ground connections.

2. CHECK EVAP CANISTER CONTROL VALVE ACTION

- Start engine and warm it up to the normal operating temperature then select view DTC.
- Touch the EVAP canister valve body, raise engine speed up to 2,000 RPM.
- Use the scan tool X-431 ″ACTIVE TEST″ function of the EVAP canister valve, touch the EVAP canister valve body, perform the action test.
- A slight vibration should exist.

Is the check result normal?

Yes >> Go to step 7.

No >> Go to the next step.

Downloaded from www.Manualslib.com manuals search engine

3. CHECK EVAP CANISTER CONTROL VALVE ELECTRICAL CONNECTOR

- Disconnect the EVAP canister control valve (1) electrical connector.
- Inspect the electrical connector for damage.

Is the electrical connector OK?

Yes >> Go to the next step.

No >> Repair or replace the electrical connector as necessary.

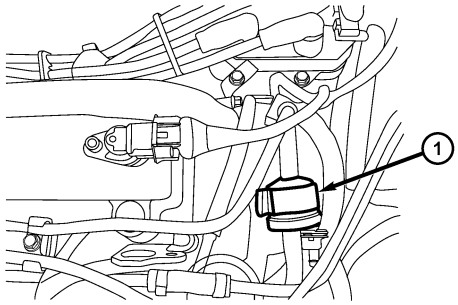

vismd030007

4. CHECK EVAP CANISTER CONTROL VALVE POWER SUPPLY CIRCUIT

- Turn ignition switch on.
- Check supply voltage between EVAP canister control valve terminal 1 and ground.
- 12 V should exist.

Is the check result normal?

Yes >> Go to step 6.

No >> Go to the next step.

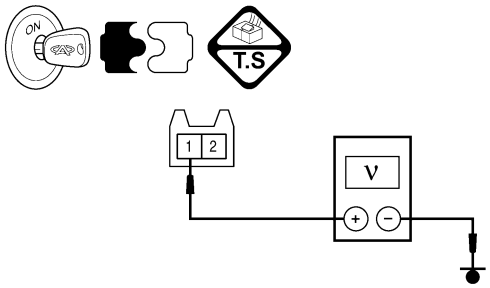

ltsmd030046

5. DETECT MALFUNCTIONING PART

- Check harness for an open or short between EVAP canister control valve and fuse.
- Check the following:

Without EOBD (1.6L)

– Front fuse and relay box F3, A1, G2, G5
– Fuse 23, fuse 24, fuse 12

Without EOBD

– Front fuse and relay box F3, A1, A13, G2, G5
– Fuse 23, fuse 24, fuse 12, fuse 27

With EOBD

– Front fuse and relay box F3, A1, A13, G5, H2, H3
– Fuse 22, fuse 24, fuse 12, fuse 27

Is the check result normal?

Yes >> Go to the next step.

No >> Repair or replace malfunctioning part.

Downloaded from www.Manualslib.com manuals search engine

6. CHECK EVAP CANISTER CONTROL VALVE CONTROL CIRCUIT FOR AN OPEN

- Check voltage between EVAP canister control valve terminal 2 and ground.
- Approximately 3.6 V should exist.

Is the check result normal?

Yes >> Go to the next step.

No >> Repair or replace open circuit in harness or connectors.
If harness is normal, go to the next step.

7. CHECK EVAP CANISTER CONTROL VALVE

- Turn ignition switch off.
- Remove EVAP canister control valve.
- Check resistance as table shown.

EVAP CANISTER CONTROL VALVE TERMINAL NO.	RESISTANCE Ω (20°C)	
1 & 2	Approximately 26 Ω	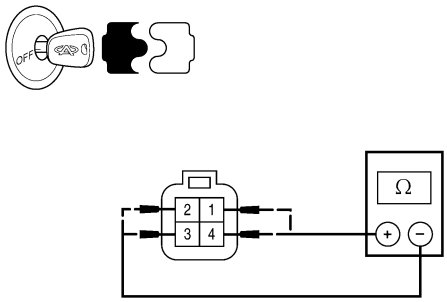 Itsmd030003

- Check air passage continuity and operation when apply 12 V current supply voltage between terminal 1 and 2.
- The check results should match specification.

Is the check result normal?

Yes >> Go to the next step.

No >> Replace EVAP canister control valve.

8. CHECK DTC

- With the X-431 scan tool, read ECM DTCs.
- Refer to ″DTC Confirmation Procedure″.

Is DTC P0444 still present?

Yes >> Replace the ECM.

NOTE : The Immobilizer control module must be matched to the new ECM (See ECM Removal & Installation in Section 03 Electronic Engine Controls).

No >> The system is now operating properly.
Reassemble the vehicle and road test to verify the customers complaint is repaired.

Downloaded from www.Manualslib.com manuals search engine

P0506 - Idle Control System RPM Lower Than Expected

- Self-diagnosis detection logic.

DTC NO.	DTC DEFINITION	DTC DETECTION CONDITION	DTC SET CONDITION	POSSIBLE CAUSE
P0506	Idle control system RPM lower than expected	• Engine is running. • With the engine idling in drive, the brake applied, engine run time below a calibrated minimum value, and no VSS, MAF/MAP, ECT, TPS, ETC, Crankshaft Position sensor, fuel system, or injector DTCs present.	ECM detected that the idle speed is less than the acceptable range.	• Electronic throttle control actuator • Intake air leak • ECM

DTC Confirmation Procedure:

Before performing the following procedure, confirm that battery voltage is more than 12 V.

- Turn ignition switch off.
- Connect the X-431 scan tool to the Data Link Connector (DLC) - use the most current software available.
- Turn ignition switch on.
- With the scan tool, record and erase stored DTCs in the ECM.
- Start engine and warm it up to the normal operating temperature then select view DTC.
- If DTC is detected, go to Diagnostic Procedure - Step 1.
- If the DTC is not detected, the DTC condition is intermittent (See Diagnosis & Testing Diagnostic Help in Section 03 Electronic Engine Controls).

NOTE :
If DTC P0506 is displayed with other DTCs, perform this diagnostic procedure before other DTCs.

NOTE :
While performing electrical diagnosis & testing, always refer to the electrical schematics for specific circuit and component information.

Downloaded from www.Manualslib.com manuals search engine

Diagnostic Procedure

1. CHECK INTAKE AIR LEAK

- Start engine and let it idle.
- Listen for an intake air leak after the mass air flow sensor.

Is the check result normal?

Yes >> Go to the next step.

No >> Discover air leak location and repair.

2. CHECK THE ELECTRIC THROTTLE CONTROL ACTUATOR

- Check the electronic throttle open degree.
- Check the electronic throttle clearance.

Is the check result normal?

Yes >> Go to the next step.

No >> Clean or replace as necessary.

3. CHECK DTC

- With the X-431 scan tool, read ECM DTCs.
- Refer to ″DTC Confirmation Procedure″.

Is DTC P0506 still present?

Yes >> Replace the ECM.

NOTE : The Immobilizer control module must be matched to the new ECM (See ECM Removal & Installation in Section 03 Electronic Engine Controls).

No >> The system is now operating properly.
Reassemble the vehicle and road test to verify the customers complaint is repaired.

Downloaded from www.Manualslib.com manuals search engine

P0601 - Internal Control Module Memory Check Sum Error
P0604 - Internal Controller Module Random Access Memory (RAM) Error
P0605 - Internal Controller Module ROM Test Error
P0606 - ECM Processor

- Self-diagnosis detection logic.

DTC NO.	DTC DEFINITION	DTC DETECTION CONDITION	POSSIBLE CAUSE
P0601	Internal control module memory check sum error	ECM detected an internal failure.	• ECM
P0604	Internal control module Random Access Memory (RAM) error		
P0605	Internal control module ROM test error		
P0606	ECM processor		

DTC Confirmation Procedure:

Before performing the following procedure, confirm that battery voltage is more than 12 V.

- Turn ignition switch off.
- Connect the X-431 scan tool to the Data Link Connector (DLC) - use the most current software available.
- Turn ignition switch on.
- With the scan tool, record and erase stored DTCs in the ECM.
- Run engine for a while then select view DTC.
- If DTC is detected, go to Diagnostic Procedure - Step 1.
- If the DTC is not detected, the DTC condition is intermittent (See Diagnosis & Testing Diagnostic Help in Section 03 Electronic Engine Controls).

NOTE :
While performing electrical diagnosis & testing, always refer to the electrical schematics for specific circuit and component information.

Downloaded from www.Manualslib.com manuals search engine

Diagnostic Procedure

1. CHECK DTC

- Perform DTC confirmation procedure.

Is DTC P0601, P0604, P0605 or P0606 present?

Yes >> Go to the next step.

No >> The DTC condition is intermittent (See Diagnostic Help in Section 03 Electronic Engine Controls).

2. CHECK ECM POWER SUPPLY AND GROUND

- Check if the ECM supply voltage circuit, ground circuit open, high resistance or short circuits existing.

Is the check result normal?

Yes >> Go to the next step.

No >> Repair circuit for an open or short in harness or connectors.

3. CHECK DTC

- With the X-431 scan tool, read ECM DTCs.
- Refer to ″DTC Confirmation Procedure″.

Is DTC P0601, P0604, P0605 or P0606 still present?

Yes >> Replace the ECM.

NOTE : The Immobilizer control module must be matched to the new ECM (See ECM Removal & Installation in Section 03 Electronic Engine Controls).

No >> The system is now operating properly.
Reassemble the vehicle and road test to verify the customers complaint is repaired.

Downloaded from www.Manualslib.com manuals search engine

P0602 - ECM Programming Error

- Self-diagnosis detection logic.

DTC NO.	DTC DEFINITION	POSSIBLE CAUSE
P0602	ECM programming error	• ECM

DTC Confirmation Procedure:

Before performing the following procedure, confirm that battery voltage is more than 12 V.

- Turn ignition switch off.
- Connect the X-431 scan tool to the Data Link Connector (DLC) - use the most current software available.
- Turn ignition switch on.
- With the scan tool, record and erase stored DTCs in the ECM.
- Run engine for a while then select view DTC.
- If DTC is detected, go to Diagnostic Procedure - Step 1.
- If the DTC is not detected, the DTC condition is intermittent (See Diagnosis & Testing Diagnostic Help in Section 03 Electronic Engine Controls).

NOTE :
While performing electrical diagnosis & testing, always refer to the electrical schematics for specific circuit and component information.

Diagnostic Procedure

1. CHECK DTC

- Perform DTC confirmation procedure.

Is DTC P0602 present?

Yes >> Go to the next step.

No >> The DTC condition is intermittent (See Diagnostic Help in Section 03 Electronic Engine Controls).

2. CHECK ECM POWER SUPPLY AND GROUND

- Check if the ECM supply voltage circuit, ground circuit open, high resistance or short circuits existing.

Is the check result normal?

Yes >> Go to the next step.

No >> Repair circuit for open or short in harness and connectors.

3. MATCH ECM

- With the scan tool X-431, match the ECM before replacing it (See ECM Removal & Installation in Section 03 Electronic Engine Controls), and view the DTC with the X-431.

Is DTC P0602 still present?

Yes >> Go to the next step.

No >> The DTC was caused by a programming error.

Downloaded from www.Manualslib.com manuals search engine

4. CHECK DTC

- With the X-431 scan tool, read ECM DTCs.
- Refer to ″DTC Confirmation Procedure″.

Is DTC P0602 still present?

Yes >> Replace the ECM.

NOTE : The Immobilizer control module must be matched to the new ECM (See ECM Removal & Installation in Section 03 Electronic Engine Controls).

No >> The system is now operating properly.
Reassemble the vehicle and road test to verify the customers complaint is repaired.

Downloaded from www.Manualslib.com manuals search engine

P0645 - A/C Clutch Relay Circuit

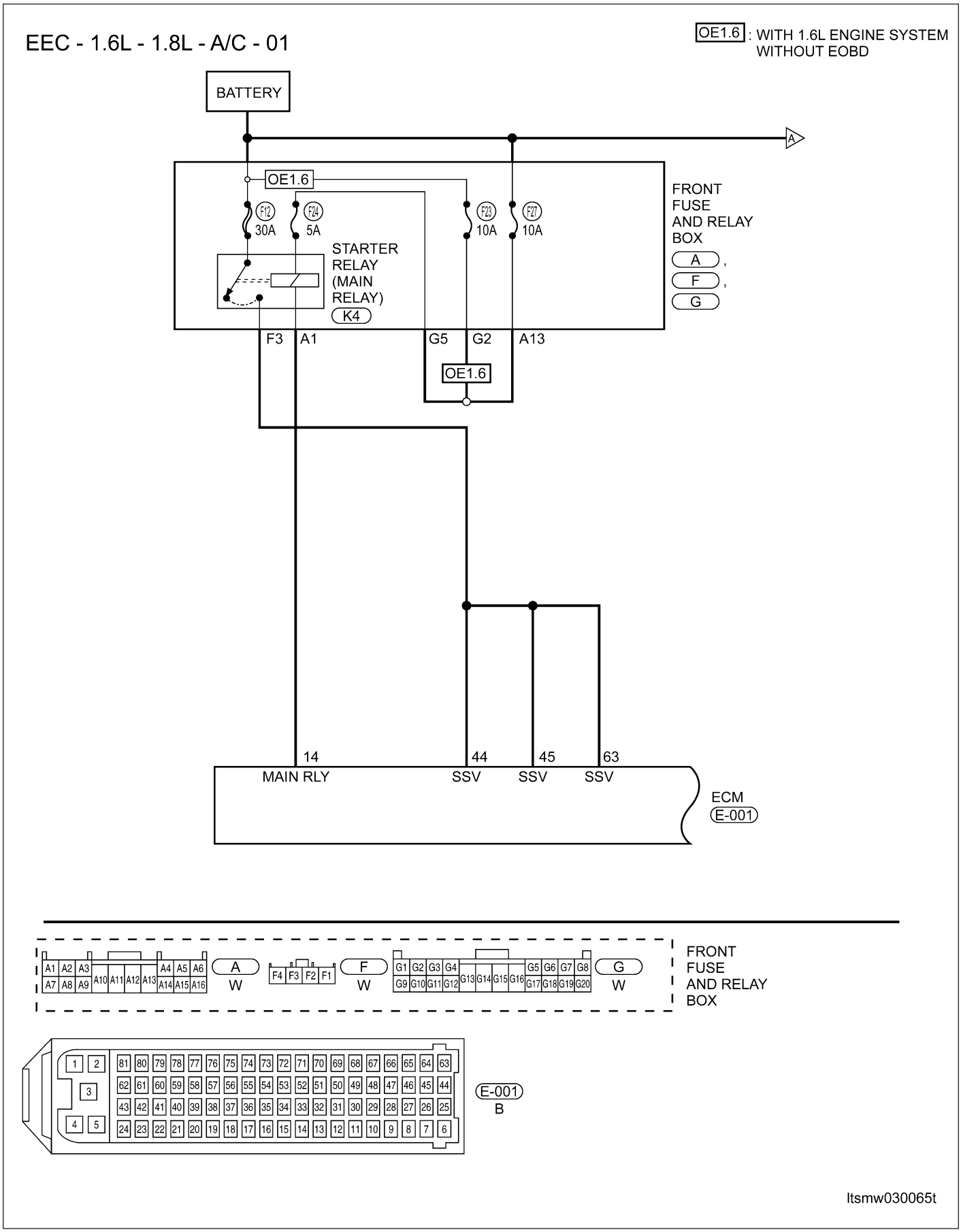

Downloaded from www.Manualslib.com manuals search engine

EEC - 1.6L - 1.8L - A/C - 02

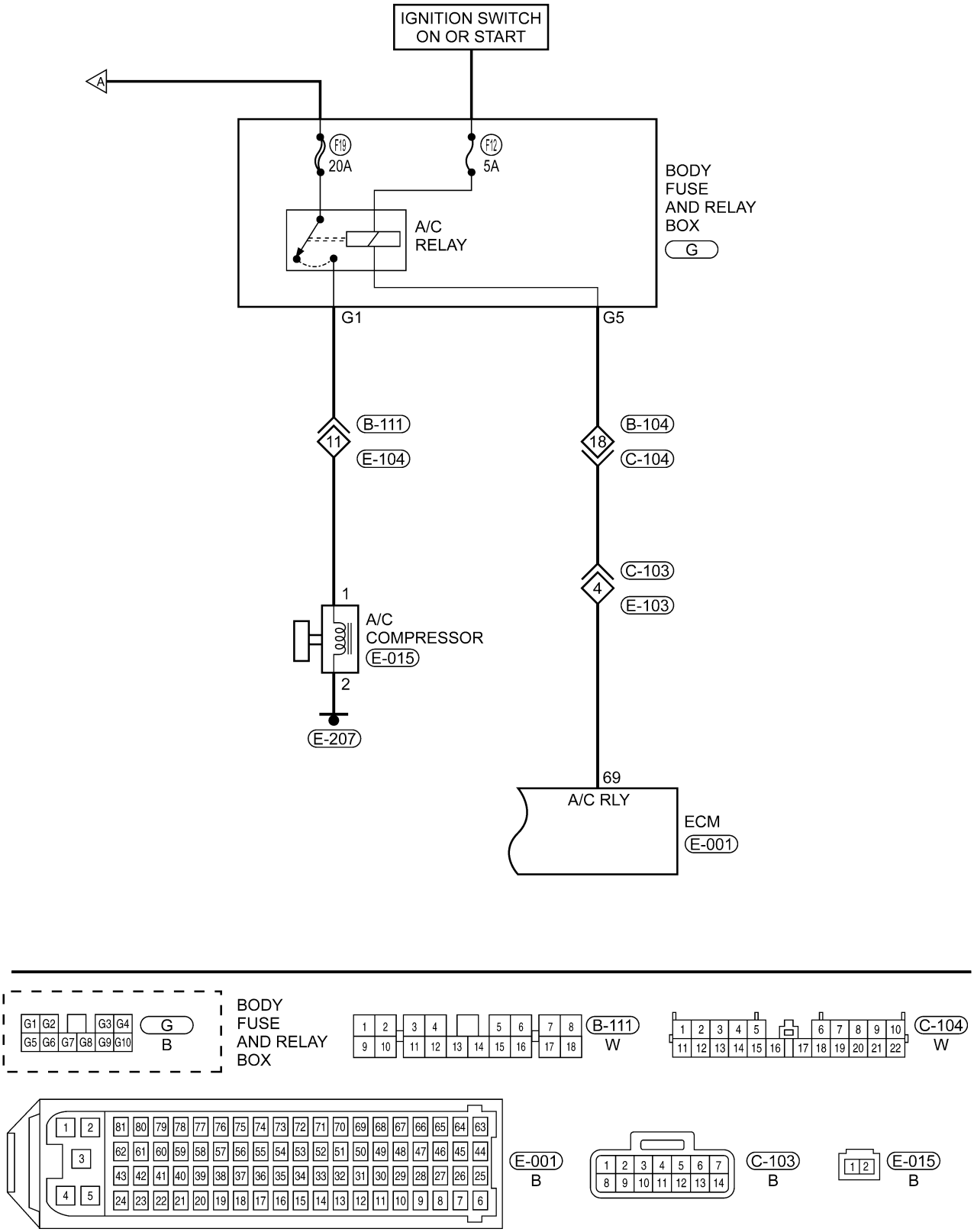

ltsmw030066t

Downloaded from www.Manualslib.com manuals search engine

Check reference values between ECM terminals and ground under the following conditions:

ECM TERMINAL NO.	ITEM	CONDITION	DATA (AVERAGE DC VOLTAGE)
69	Air compressor relay	• After engine has been started for 5 seconds, A/C can be turned on. • If IAT is above 140.3°C , A/C will be shut off. • If ECT is above 140.3°C, A/C will be shut off. If ECT is below 111.8°C, A/C will resume. • If A/C high side pressure is above 20.0 bar, A/C will be shut off. If A/C high side pressure is below 19.5 bar, A/C will resume. • If evaporator temperature is below 1.5°C, A/C will be shut off. If evaporator temperature is above 4.5°C, A/C will resume. • If system voltage is below 8.04 V, A/C will be shut off. If system voltage is above 10.01 V, A/C will resume.	0 V or 12 V

On Board Diagnostic Logic

- Self-diagnosis detection logic.

DTC NO.	DTC DEFINITION	DTC DETECTION CONDITION	DTC SET CONDITION	POSSIBLE CAUSE
P0645	A/C clutch relay circuit	Engine is running	ECM detected that the input signal is out of the acceptable range.	• Fuse • A/C compressor relay • Harness or connectors • ECM

DTC Confirmation Procedure:

Before performing the following procedure, confirm that battery voltage is more than 12 V.

- Turn ignition switch off.
- Connect the X-431 scan tool to the Data Link Connector (DLC) - use the most current software available.
- Turn ignition switch on.
- With the scan tool, record and erase stored DTCs in the ECM.
- Start engine and warm it up to the normal operating temperature.
- Turn A/C switch on then select view DTC.
- If DTC is detected, go to Diagnostic Procedure - Step 1.
- If the DTC is not detected, the DTC condition is intermittent (See Diagnosis & Testing Diagnostic Help in Section 03 Electronic Engine Controls).

NOTE :

While performing electrical diagnosis & testing, always refer to the electrical schematics for specific circuit and component information.

Downloaded from www.Manualslib.com manuals search engine

Diagnostic Procedure

1. CHECK GROUND CONNECTIONS

- Turn ignition switch off.
- Loosen and retighten ground screws on the body (See Ground Inspection in Section 03 Electronic Engine Controls).
- Inspect ground connections E-207 and E-208 mounting position (See Vehicle Wiring Harness Layout - Engine Room Harness (With 1.6L/1.8L Engine) in Section 16 Wiring).

Are the ground connections OK?

Yes >> Go to the next step.

No >> Repair or replace ground connections.

2. CHECK A/C CLUTCH RELAY CONTROL CIRCUIT

- Turn off A/C switch.
- Check A/C clutch relay control circuit supply voltage between ECM terminal 69 and ground in the ECM electrical connector E-001.
- Battery voltage should exist.

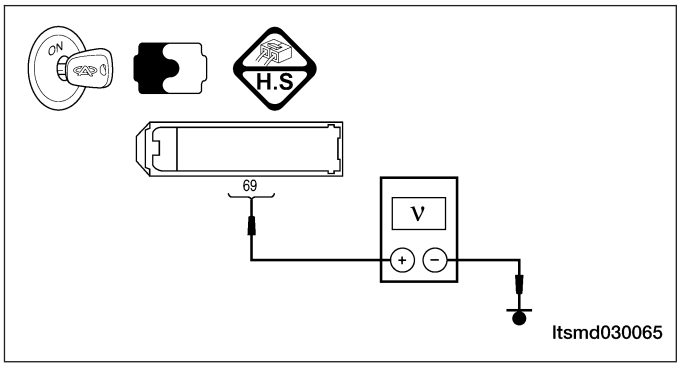

Is the check result normal?

Yes >> Go to step 4.

No >> Go to the next step.

3. DETECT MALFUNCTIONING PART

- Check the following:
  - Fuse FB18, SB2
  - Front fuse and relay box K, E, J
  - A/C compressor relay, EMS relay (R2)
  - Check harness for an open or short between ECM terminal 69 and fuse 12.

Is the check result normal?

Yes >> Go to the next step.

No >> Repair or replace malfunctioning part.

Downloaded from www.Manualslib.com manuals search engine

4. CHECK DTC

- With the X-431 scan tool, read ECM DTCs.
- See "DTC Confirmation Procedure".

Is DTC P0645 still present?

Yes >> Replace the ECM.

NOTE : The Immobilizer control module must be matched to the new ECM (See ECM Removal & Installation in Section 03 Electronic Engine Controls).

No >> The system is now operating properly.
Reassemble the vehicle and road test to verify the customers complaint is repaired.

Downloaded from www.Manualslib.com manuals search engine

P1545 - Throttle Position Control Malfunction

EEC - 1.6L - 1.8L - TPS - 01

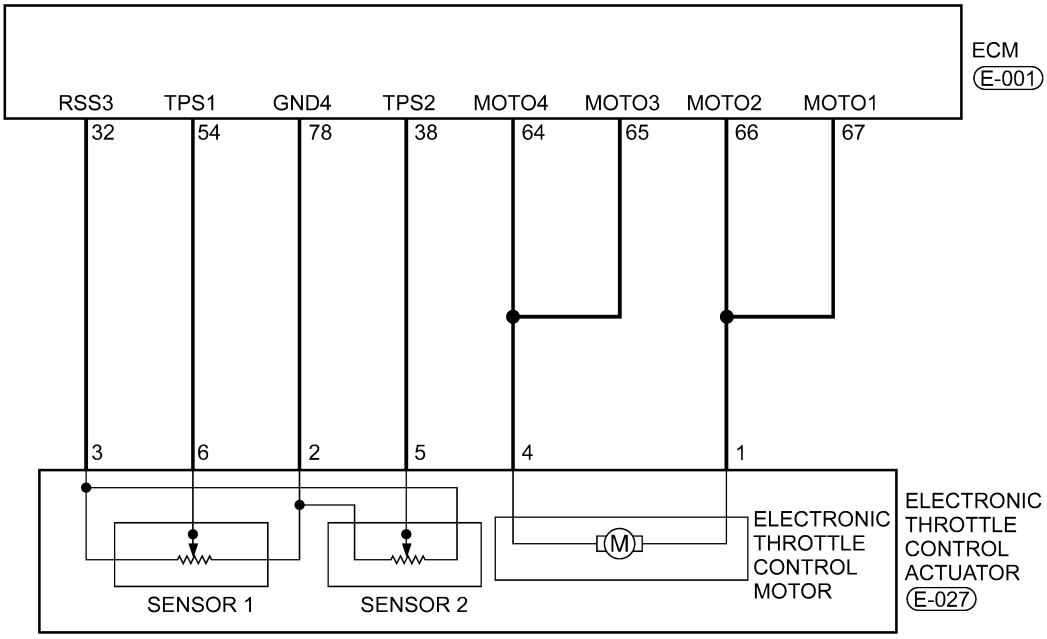

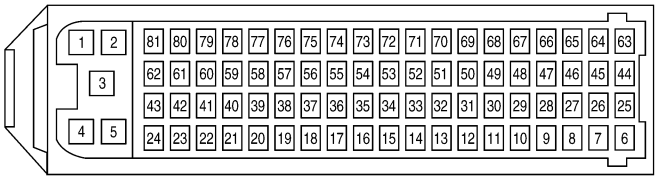

E-001
B

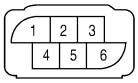

E-027
B

ltsmw030044t

Downloaded from www.Manualslib.com manuals search engine

EEC - 1.6L - 1.8L - APS - 01

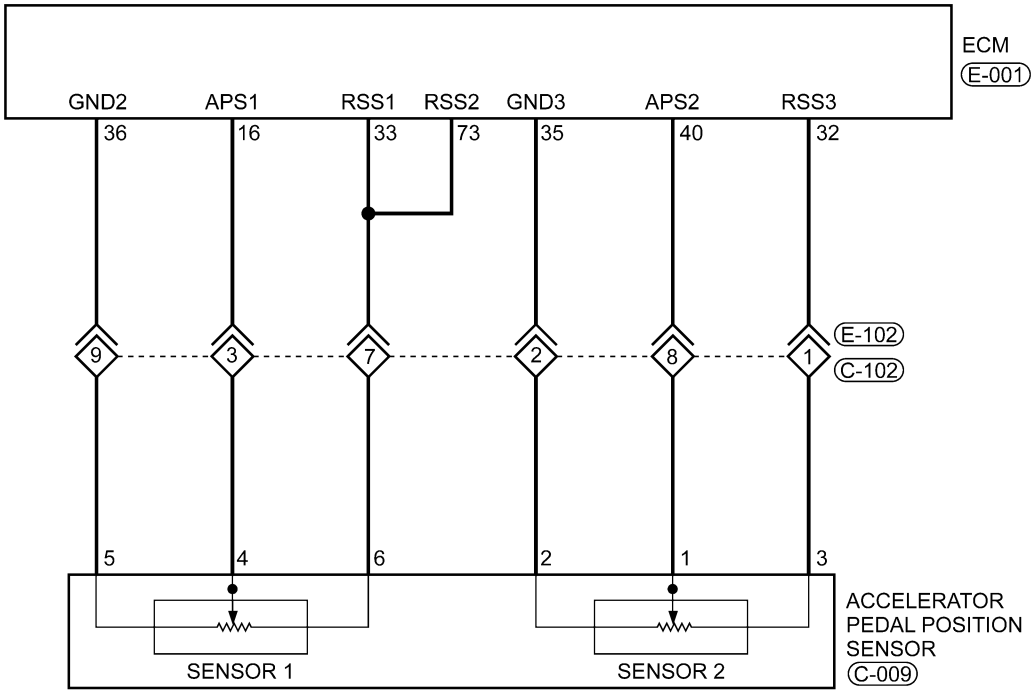

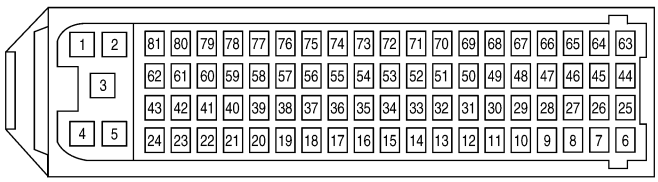

E-001
B

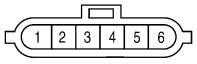

C-009
B

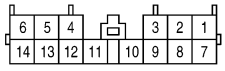

E-102
W

ltsmw030045t

Downloaded from www.Manualslib.com manuals search engine

Check reference values between ECM terminals and ground under the following conditions:

ECM TERMINAL NO.	ITEM	CONDITION		DATA (DC VOLTAGE)
32	Regulated sensor supply 2	Ignition switch on	-	Approximately 5 V
38	Electronic throttle control actuator (Position sensor)		• Engine stopped • Accelerator pedal: Fully released	4.24 V
			• Engine stopped • Accelerator pedal: Fully depressed	0.72 V
54	Electronic throttle control actuator		• Engine stopped • Accelerator pedal: Fully released	0.74 V
			• Engine stopped • Accelerator pedal: Fully depressed	4.62 V
78	Sensor (GND)		-	Approximately 0 V
64	Motor 4			12 V or 0 V
65	Motor 3			
66	Motor 2			12 V or 0 V
67	Motor 1			

On Board Diagnostic Logic

- Self-diagnosis detection logic.

DTC NO.	DTC DEFINITION	DTC DETECTION CONDITION	DTC SET CONDITION	POSSIBLE CAUSE
P1545	Throttle position control malfunction	Ignition switch on or after engine start.	Rationally incorrect voltage is sent to ECM compared with the signals from TPS1 and TPS2.	• Electronic throttle control actuator (TPS1 and TPS2) • Harness or connectors • Accelerator pedal position sensor 2 • ECM

DTC Confirmation Procedure:

Before performing the following procedure, confirm that battery voltage is more than 12 V.

- Turn ignition switch off.
- Connect the X-431 scan tool to the Data Link Connector (DLC) - use the most current software available.
- Turn ignition switch on.
- With the scan tool, record and erase stored DTCs in the ECM.
- Start engine and warm it up to the normal operating temperature then select view DTC.
- If DTC is detected, go to Diagnostic Procedure - Step 1.
- If the DTC is not detected, the DTC condition is intermittent (See Diagnosis & Testing Diagnostic Help in Section 03 Electronic Engine Controls).

NOTE :

While performing electrical diagnosis & testing, always refer to the electrical schematics for specific circuit and component information.

Downloaded from www.Manualslib.com manuals search engine

Diagnostic Procedure

1. CHECK GROUND CONNECTIONS

- Turn ignition switch off.
- Loosen and retighten ground screws on the body (See Ground Inspection in Section 03 Electronic Engine Controls).
- Inspect ground connections E-207 and E-208 mounting position (See Vehicle Wiring Harness Layout - Engine Room Harness (With 1.6L/1.8L Engine) in Section 16 Wiring).

Are the ground connections OK?

Yes >> Go to the next step.

No >> Repair or replace ground harness or connections.

2. CHECK THROTTLE POSITION SENSOR (TPS) ELECTRICAL CONNECTOR

- Disconnect the TPS (1) electrical connector.
- Inspect the electrical connector for damage.

Is the electrical connector OK?

Yes >> Go to the next step.

No >> Repair or replace the electrical connector as necessary.

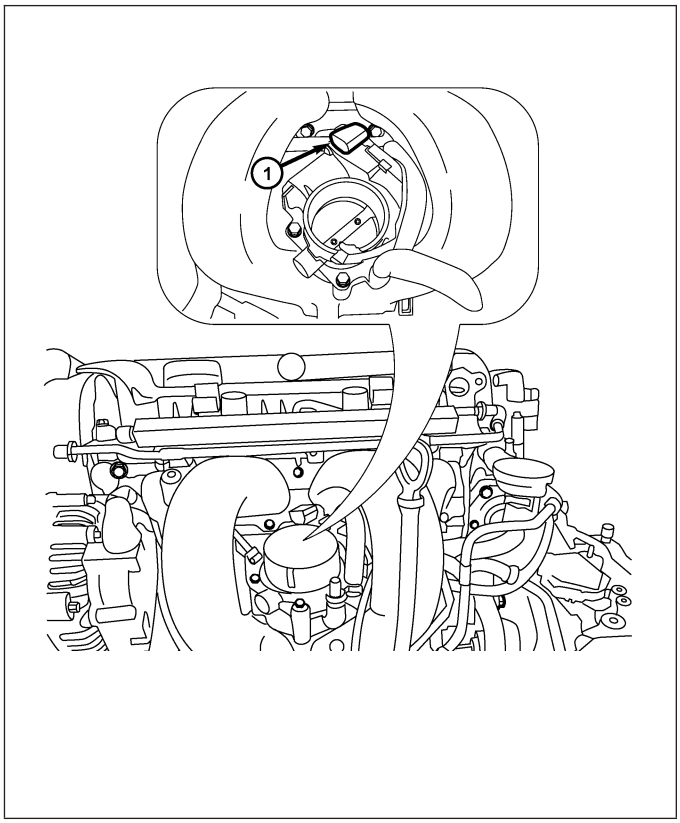

Downloaded from www.Manualslib.com manuals search engine

3. CHECK THE THROTTLE POSITION SENSOR (TPS) POWER SUPPLY CIRCUIT - (1)

- Turn ignition switch on.
- Check supply voltage between TPS terminal 3 and ground in the TPS electrical connector E-027.
- Approximately 5 V should exist.

Is the check result normal?

Yes >> Go to step 8.

No >> Go to the next step.

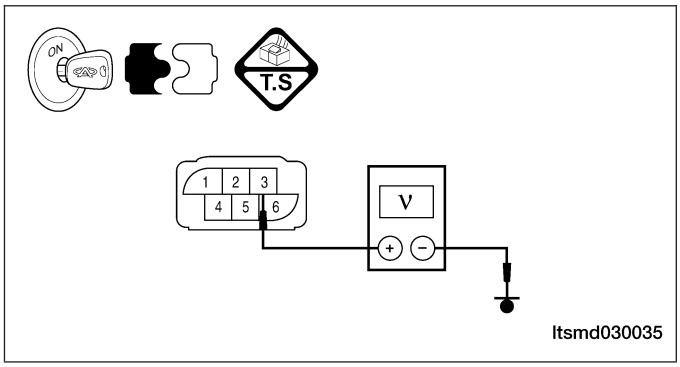

4. CHECK THE TPS POWER SUPPLY CIRCUIT - (2)

- Turn ignition switch off.
- Disconnect ECM harness connector.
- Check harness continuity between TPS terminal 3 and ECM terminal 32.
- Continuity should exist.

Is the check result normal?

Yes >> Go to the next step.

No >> Repair or replace circuit for an open.

5. CHECK THE TPS POWER SUPPLY CIRCUIT - (3)

- Check harness for short to power or short to ground, between following terminals.

ECM TERMINAL	TPS TERMINAL
32	TPS terminal 3
32	APP sensor terminal 3
33	APP sensor terminal 6

Is the check result normal?

Yes >> Go to the next step.

No >> Repair circuit for short to ground or short to power in harness or connectors.

Downloaded from www.Manualslib.com manuals search engine

6. CHECK THE ACCELERATOR PEDAL POSITION (APP) SENSOR

- Connect all harness connectors disconnected.
- Turn ignition switch on.
- Check voltage between ECM terminals 16 (APP sensor 1) and ground, terminal 40 (APP sensor 2) and ground under the following conditions:

ECM TERMINAL	APP SENSOR TERMINAL	
16	APP sensor terminal 4	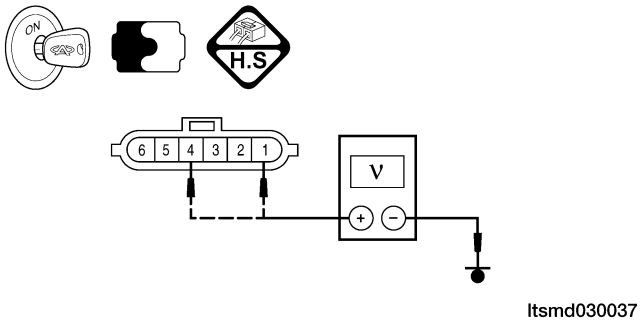
40	APP sensor terminal 1	

ECM TERMINAL NO.	ITEM	CONDITION		DATA (DC VOLTAGE)
16	Accelerator Pedal Position Sensor 1 (APPS1)	Turn ignition switch on	• Engine stopped • Accelerator pedal: Fully released	0.72 - 0.74 V
			• Engine stopped • Accelerator pedal: Fully depressed	3.95 V
40	Accelerator Pedal Position Sensor 2 (APPS2)		• Engine stopped • Accelerator pedal: Fully released	0.36 - 0.37 V
			• Engine stopped • Accelerator pedal: Fully depressed	1.97 V

Is the check result normal?

Yes >> Go to step 10.

No >> Replace the Accelerator Pedal Assembly (See Accelerator Pedal Position Sensor Removal & Installation in Section 03 Electronic Engine Controls).

7. CHECK THE TPS SIGNAL CIRCUIT FOR AN OPEN OR SHORT

- Turn ignition switch off.
- Disconnect ECM harness connector.
- Check harness continuity between electronic throttle control actuator terminal 5 and ECM terminal 38, electronic throttle control actuator terminal 6 and ECM terminal 54.
- Continuity should exist.
- Check harness for short to power and short to ground.

Is the check result normal?

Yes >> Go to the next step.

No >> Repair circuit for an open or short to power or short to ground in harness or connectors.

Downloaded from www.Manualslib.com manuals search engine

8. CHECK THE TPS GROUND CIRCUIT FOR AN OPEN OR SHORT

- Check harness continuity between electronic throttle control actuator terminal 2 and ECM terminal 78.
- Continuity should exist.
- Check harness for short to power and short to ground.

Is the check result normal?

Yes >> Go to the next step.

No >> Repair circuit for an open or short to power in harness or connectors.

9. CHECK TPS

- Connect all harness connectors disconnected.
- Turn ignition switch on.
- Check voltage between ECM terminals 54 (TP sensor 1) and ground, terminal 38 (TP sensor 2) and ground under the following conditions:

ECM TERMINAL NO.	ITEM	CONDITION		DATA (DC VOLTAGE)
38 (TPS connector terminal 5)	Electronic throttle control actuator (Position sensor)	Ignition switch on	• Engine stopped • Accelerator pedal: Fully released	4.24 V
			• Engine stopped • Accelerator pedal: Fully depressed	0.72 V
54 (TPS connector terminal 6)	Electronic throttle control actuator		• Engine stopped • Accelerator pedal: Fully released	0.74 V
			• Engine stopped • Accelerator pedal: Fully depressed	4.62 V

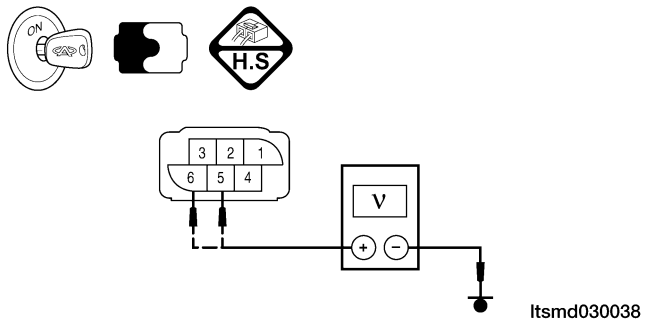

Is the check result normal?

Yes >> Go to the next step.

No >> Replace electronic throttle control actuator, and perform throttle valve position learning.

Downloaded from www.Manualslib.com manuals search engine

10. CHECK DTC

- With the X-431 scan tool, read ECM DTCs.
- See DTC Confirmation Procedure.

Is DTC P1545 still present?

Yes >> Replace the ECM.

NOTE : The Immobilizer control module must be matched to the new ECM (See ECM Removal & Installation in Section 03 Electronic Engine Controls).

No >> The system is now operating properly.
Reassemble the vehicle and road test to verify the customers complaint is repaired.

Downloaded from www.Manualslib.com manuals search engine

P2138 - Pedal Position Sensor Performance

EEC - 1.6L - 1.8L - APS - 01

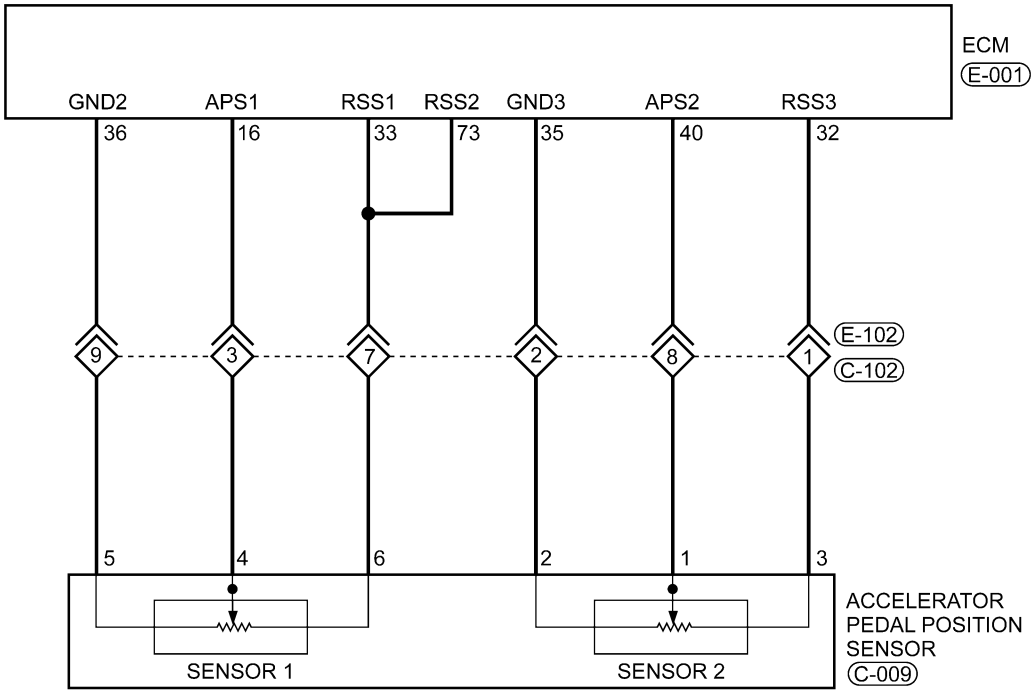

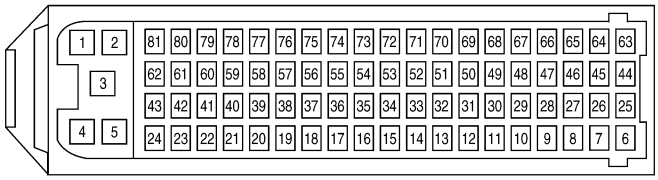

E-001
B

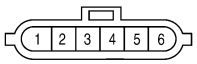

C-009
B

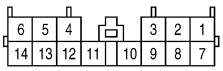

E-102
W

ltsmw030045t

Downloaded from www.Manualslib.com manuals search engine

EEC - 1.6L - 1.8L - TPS - 01

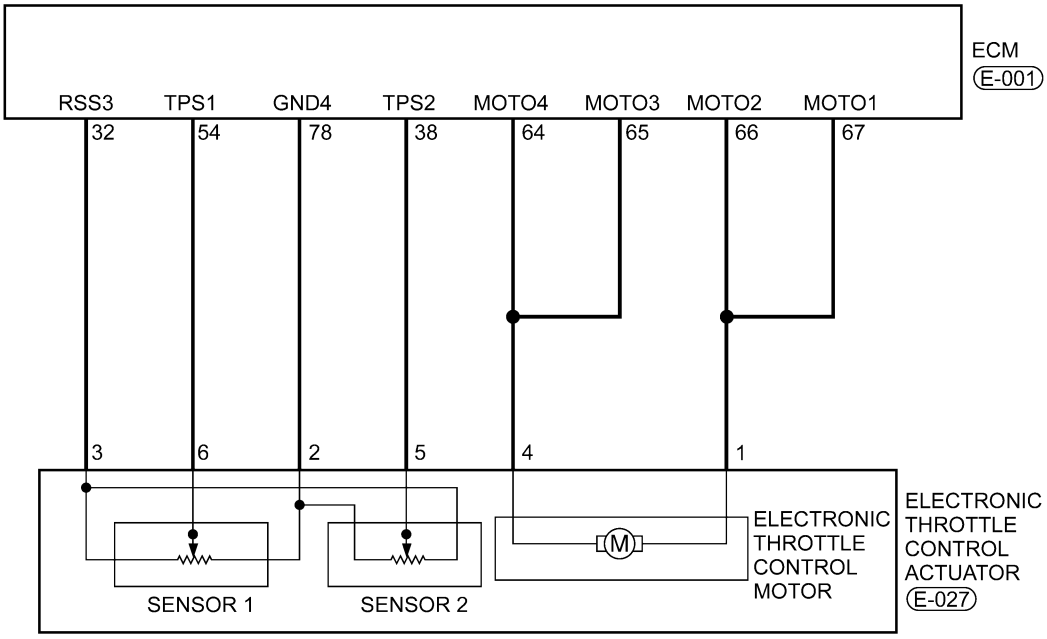

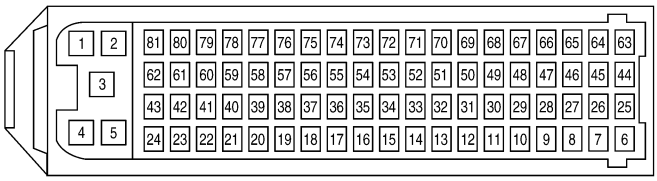

E-001
B

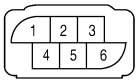

E-027
B

ltsmw030044t

Downloaded from www.Manualslib.com manuals search engine

Check reference values between ECM terminals and ground under the following conditions:

ECM TERMINAL NO.	ITEM	CONDITION		DATA (DC VOLTAGE)
32	Regulated sensor supply 2	Ignition switch: ON	-	Approximately 5 V
33	Regulated sensor supply 1		-	Approximately 5 V
16	Accelerator Pedal Position Sensor 1 (APPS1)		• Engine stopped • Accelerator pedal: Fully released	0.72 - 0.74 V
			• Engine stopped • Accelerator pedal: Fully depressed	3.95 V
40	Accelerator Pedal Position Sensor 2 (APPS2)		• Engine stopped • Accelerator pedal: Fully released	0.36 - 0.37 V
			• Engine stopped • Accelerator pedal: Fully depressed	1.97 V
35	Sensor (GND)		-	Approximately 0 V
36	Sensor (GND)		-	Approximately 0 V
73	Regulated sensor supply 1		-	Approximately 5 V

On Board Diagnostic Logic

- Self-diagnosis detection logic.

DTC NO.	DTC DEFINITION	DTC DETECTION CONDITION	DTC SET CONDITION	POSSIBLE CAUSE
P2138	Accelerator pedal position sensor performance	Ignition switch on or after engine start	Rationally incorrect voltage is sent to ECM compared with the signals from APPS1 and APPS2.	• Accelerator pedal position sensor 1 and 2 • Harness or connectors • Electronic throttle control actuator (TPS1 and TPS2) • ECM

DTC Confirmation Procedure:

Before performing the following procedure, confirm that battery voltage is more than 12 V.

- Turn ignition switch off.
- Connect the X-431 scan tool to the Data Link Connector (DLC) - use the most current software available.
- Turn ignition switch on.
- With the scan tool, record and erase stored DTCs in the ECM.
- Start engine then select view DTC and data stream.
- If the DTC is detected, the DTC condition is current. Go to Diagnostic Procedure - Step 1.
- If the DTC is not detected, the DTC condition is intermittent (See Diagnostic Help and Intermittent DTC Troubleshooting in Section 03 Electronic Engine Controls for more information.

NOTE :

While performing electrical diagnosis & testing, always refer to the electrical schematics for specific circuit and component information.

Downloaded from www.Manualslib.com manuals search engine

Diagnostic Procedure

1. CHECK GROUND CONNECTIONS

- Turn ignition switch off.
- Loosen and retighten ground screws on the body (See Ground Inspection in Section 03 Electronic Engine Controls).
- Inspect ground connections E-207 and E-208 mounting position (See Vehicle Wiring Harness Layout - Engine Room Harness (With 1.6L/1.8L Engine) in Section 16 Wiring).

Are the ground connections OK?

Yes >> Go to the next step.

No >> Repair or replace ground connections.

2. CHECK ACCELERATOR PEDAL POSITION SENSOR 1 (APPS1) ELECTRICAL CONNECTOR

- Disconnect the APPS1 electrical connector (1).
- Inspect the electrical connector for damage.

Is the electrical connector OK?

Yes >> Go to the next step.

No >> Repair or replace the electrical connector as necessary.

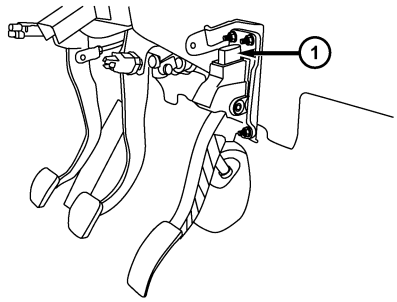

vismd030008

3. CHECK ACCELERATOR PEDAL POSITION SENSOR 1 (APPS1) POWER SUPPLY CIRCUIT

- Turn ignition switch on.
- Check supply voltage between sensor terminal 6 and ground in the APP sensor electrical connector C-009.
- Approximately 5 V should exist.

Is the check result normal?

Yes >> Go to step 5.

No >> Go to the next step.

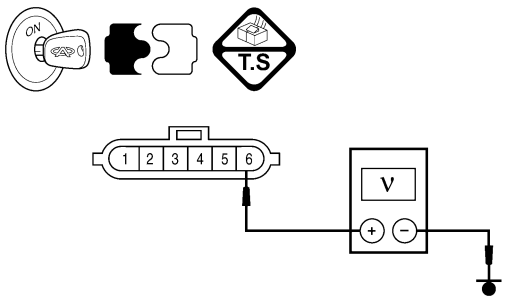

ltsmd030053

4. DETECT MALFUNCTIONING PART

- Check harness connectors E-102, C-102.
- Check harness for an open and short between APP sensor 1 and ECM.

Is the check result normal?

Yes >> Go to the next step.

No >> Repair or replace malfunctioning part.

Downloaded from www.Manualslib.com manuals search engine

5. CHECK APP SENSOR 2 POWER SUPPLY CIRCUIT

- Check supply voltage between APP sensor terminal 3 and ground in the APP sensor electrical connector C-009.
- Approximately 5 V should exist.

Is the check result normal?

Yes >> Go to step 7.

No >> Go to the next step.

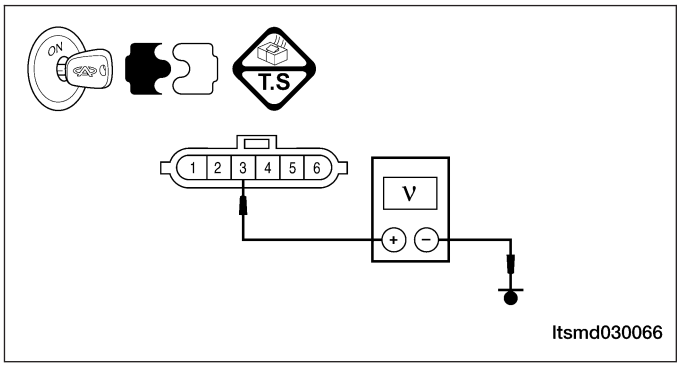

6. DETECT MALFUNCTIONING PART

- Check harness connectors E-102, C-102.
- Check harness for an open and short between APPS2 and ECM.

Is the check result normal?

Yes >> Go to the next step.

No >> Repair or replace malfunctioning part.

7. CHECK TPS POWER SUPPLY CIRCUIT

- Check harness for short to power and short to ground between following terminals.

ECM TERMINAL	TPS TERMINAL
32	3

Is the check result normal?

Yes >> Go to the next step.

No >> Repair circuit for short to ground or short to power in harness or connectors.

Downloaded from www.Manualslib.com manuals search engine

8. CHECK TPS

- Connect all harness connectors disconnected.
- Turn ignition switch on.
- Check voltage between ECM terminals 54 (TPS1) and ground, terminal 38 (TPS2) and ground under the following conditions:

ECM TERMINAL NO.	ITEM	CONDITION		DATA (DC VOLTAGE)
38	Electronic throttle control actuator (Position sensor)	Ignition switch: ON	• Engine stopped • Accelerator pedal: Fully released	4.24 V
			• Engine stopped • Accelerator pedal: Fully depressed	0.72 V
54	Electronic throttle control actuator		• Engine stopped • Accelerator pedal: Fully released	0.74 V
			• Engine stopped • Accelerator pedal: Fully depressed	4.62 V

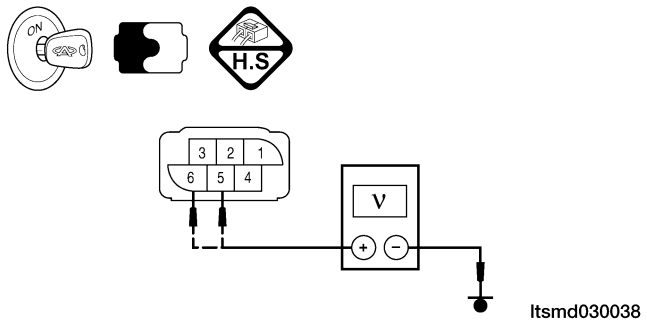

Is the check result normal?

Yes >> Go to the next step.

No >> Repair or replace TPS circuits for open or short.
If the TPS circuits are normal, replace electronic throttle control actuator. Perform throttle valve position self-learning.

9. CHECK APP SENSOR GROUND CIRCUIT FOR AN OPEN OR SHORT

- Turn ignition switch off.
- Disconnect ECM harness connector.
- Check harness continuity between APP sensor 2 terminal 2 and ECM terminal 35, APP sensor 1 terminal 5 and ECM terminal 36.
- Continuity should exist.
- Check harness for short to power.

Is the check result normal?

Yes >> Go to the next step.

No >> Repair circuit for an open or short to power in harness or connectors.

Downloaded from www.Manualslib.com manuals search engine

10. CHECK APP SENSOR SIGNAL CIRCUIT FOR AN OPEN OR SHORT

- Check harness continuity between APP sensor 1 terminal 4 and ECM terminal 16, APP sensor 2 terminal 1 and ECM terminal 40.
- Continuity should exist.
- Check harness for short to power and short to ground.

Is the check result normal?

Yes >> Go to the next step.

No >> Repair circuit for an open or short to power or short to ground in harness or connectors.

11. CHECK APP SENSOR

- Connect all harness connectors disconnected.
- Turn ignition switch on.
- Check voltage between ECM terminals 16 (APP sensor 1) and ground, terminal 40 (APP sensor 2) and ground under the following conditions:

TERMINAL NO.	ITEM	CONDITION		DATA (DC VOLTAGE)
16	Accelerator Pedal Position Sensor 1 (APPS1)	Ignition switch: ON	• Engine stopped • Accelerator pedal: Fully released	0.72 - 0.74 V
			• Engine stopped • Accelerator pedal: Fully depressed	3.95 V
40	Accelerator Pedal Position Sensor 2 (APPS2)		• Engine stopped • Accelerator pedal: Fully released	0.36 - 0.37 V
			• Engine stopped • Accelerator pedal: Fully depressed	1.97 V

Is the check result normal?

Yes >> Go to the next step.

No >> Replace accelerator pedal assembly.
Perform Accelerator pedal position self-learning.

12. CHECK DTC

- With the X-431 scan tool, read ECM DTCs.
- Refer to ″DTC Confirmation Procedure″.

Is DTC P2138 still present?

Yes >> Replace the ECM.

NOTE : The Immobilizer control module must be matched to the new ECM (See ECM Removal & Installation in Section 03 Electronic Engine Controls).

No >> The system is now operating properly.
Reassemble the vehicle and road test to verify the customers complaint is repaired.

Downloaded from www.Manualslib.com manuals search engine

ON-VEHICLE SERVICE

Engine Coolant Temperature (ECT) Sensor

Description

The Engine Coolant Temperature (ECT) sensor threads into the coolant outlet connector. The ECT is a negative thermal coefficient sensor.

Operation

The ECT provides an input to the Engine Control Module (ECM). As temperature increases, resistance of the sensor decreases. As coolant temperature varies, the ECT sensor resistance changes resulting in a different voltage value at the ECT sensor signal circuit. The ECM uses the input to control air-fuel mixture, timing, A/C compressor and radiator fan on/off times.

Removal & Installation

1. Disconnect the negative battery cable.
2. Drain the cooling system (See Cooling System Draining Procedure in Section 06 Cooling System).

WARNING!

Never remove the pressure relief cap under any conditions while the engine is operating or hot. Failure to follow these instructions could result in personal injury or damage to the cooling system or engine. To avoid having scalding hot coolant or steam blow out of the cooling system, use extreme care when removing the pressure relief cap. Wait until the engine has cooled, then wrap a thick cloth around the pressure relief cap and turn it slowly one turn (counterclockwise). Step back while the pressure is released from the cooling system. When you are certain all the pressure has been released, (with a cloth) turn and remove the pressure relief cap. Failure to follow these instructions may result in serious personal injury.

3. Disconnect the coolant temperature sensor electrical connector.

CAUTION:
Remove the coolant temperature sensor when the engine is cold.

4. Remove the engine coolant temperature sensor (1).
   (Tighten: Engine coolant temperature sensor to 20 N·m)

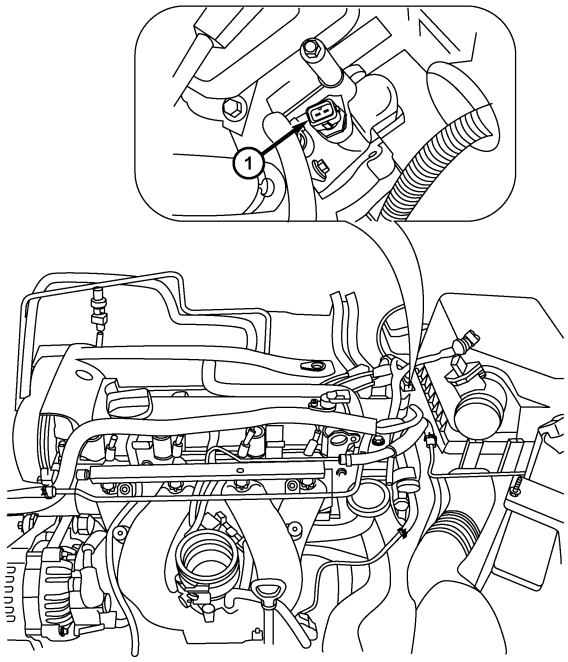

5. Discard the O-ring.

Downloaded from www.Manualslib.com manuals search engine

6. Installation is in the reverse order of removal.

NOTE :
After installed the engine coolant temperature sensor, check the coolant level.

Knock Sensor

Description

The knock sensor is attached to the cylinder block. The knock sensor is designed to detect engine vibration that is caused by detonation.

Operation

When the knock sensor detects a knock in one of the cylinders, it sends an input signal to the Engine Control Module (ECM). In response, the ECM retards ignition timing for all cylinders by a specified amount.

Knock sensors contain a piezoelectric material which constantly vibrates and sends an input voltage (signal) to the ECM while the engine operates. As the intensity of the crystal's vibration increases, the knock sensor output voltage also increases.

The ECM ignores knock sensor input during engine idle conditions. Once the engine speed exceeds a specified value, knock retard is allowed.

Removal & Installation

1. Disconnect the negative battery cable.
2. Disconnect the knock sensor electrical connector.
3. Remove the knock sensor retaining bolt (1) and remove the knock sensor.
   (Tighten: Knock sensor retaining bolt to 20 N·m)

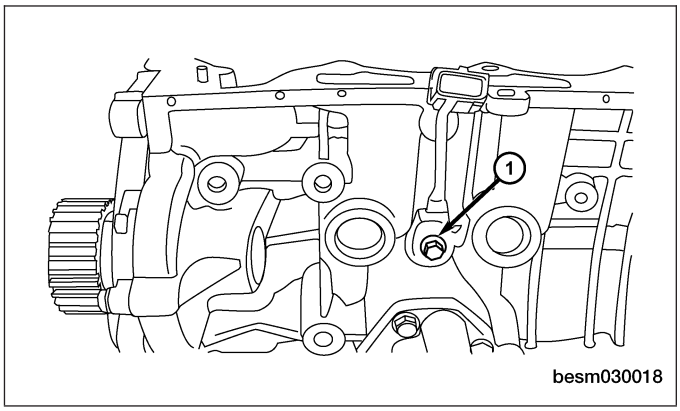

4. Installation is in the reverse order of removal.

Oxygen Sensor

Description

This vehicle is equipped with two oxygen sensors (upstream oxygen sensor & downstream oxygen sensor). The oxygen sensors are located before and after the three way catalyst. The oxygen sensors continually monitor the oxygen level in the exhaust gas. The sensor is made of ceramic zirconia. The zirconia generates voltage from approximately 1 volt in richer conditions to 0 volt in leaner conditions.

Operation

The O_2 sensors produce voltages from 0 to 1 volt, depending upon the oxygen content of the exhaust gas. When a large amount of oxygen is present (caused by a lean air/fuel mixture, can be caused by misfire and exhaust leaks), the sensors produces a low voltage. When there is a lesser amount of oxygen present (caused by a rich air/fuel mixture, can be caused by internal engine problems) it produces a higher voltage. By monitoring the oxygen content and converting it to electrical voltage, the sensors act as a rich-lean switch.

The oxygen sensors are equipped with a heating element that keeps the sensors at proper operating temperature during all operating modes. Maintaining correct sensor temperature at all times allows the system to enter into closed loop operation sooner. Also, it allows the system to remain in closed loop operation during periods of extended idle.

Downloaded from www.Manualslib.com manuals search engine

Upstream Oxygen Sensor

The input from the upstream heated oxygen sensor tells the Engine Control Module (ECM) the oxygen content of the exhaust gas. Based on this input, the ECM fine tunes the air-fuel ratio by adjusting injector pulse width.

Downstream Oxygen Sensor

The downstream heated oxygen sensor signal is used to detect catalytic convertor deterioration. As the convertor deteriorates, the signal from the downstream sensor begins to match the upstream sensor signal except for a slight time delay. By comparing the downstream heated oxygen sensor signal to the signal from the upstream sensor, the ECM calculates catalytic convertor efficiency. This calculation is also used to establish the upstream O2 goal voltage (switching point).

Removal & Installation - Upstream Oxygen Sensor

1. Disconnect the negative battery cable.
2. Disconnect the oxygen sensor electrical connector.

CAUTION:
Remove the oxygen sensor after the exhaust pipe has cooled.

3. Remove the upstream oxygen sensor (1).
   (Tighten: Upstream oxygen sensor to 45 N·m)

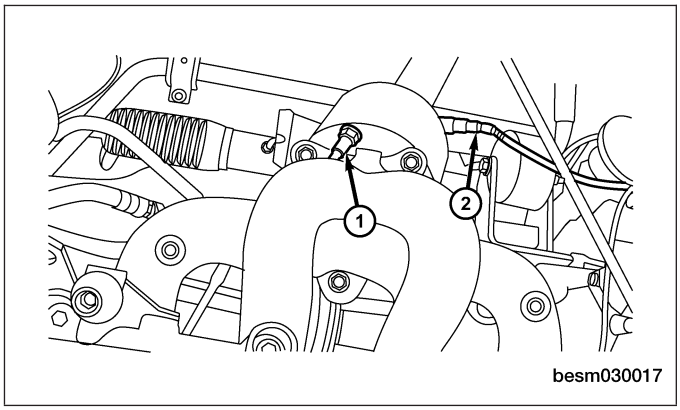

4. Installation is in the reverse order of removal.

Installation Notes:

- Before installing the oxygen sensor, coat the threads with rust inhibiting lubricant.

Removal & Installation - Downstream Oxygen Sensor

1. Disconnect the negative battery cable.
2. Disconnect the oxygen sensor electrical connector.

CAUTION:
Remove the oxygen sensor after the exhaust pipe has cooled.

3. Remove the downstream oxygen sensor (2).
   (Tighten: Downstream oxygen sensor to 45 N·m)

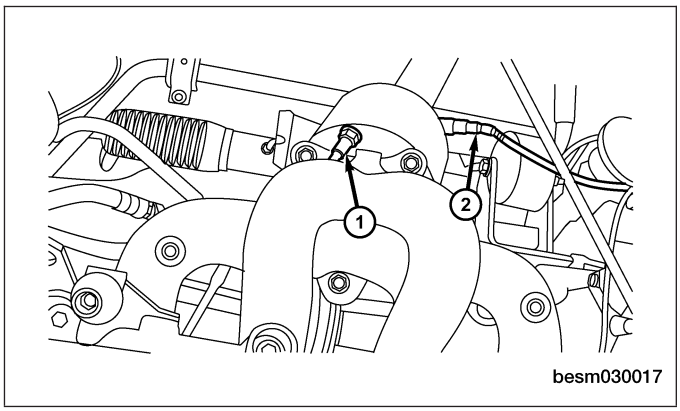

Downloaded from www.Manualslib.com manuals search engine

4. Installation is in the reverse order of removal.

Installation Notes:

- Before installing the oxygen sensor, coat the threads with rust inhibiting lubricant.

Crankshaft Position (CKP) Sensor

Description

The Crankshaft Position (CKP) sensor is located on the flywheel shell facing the gear teeth of the signal plate. It detects the fluctuation of the engine revolution. The sensor consists of a permanent magnet and induction coil.

Operation

The crankshaft sensor is made of a toothed metal disk mounted on the crankshaft and a stationary detector that covers a magnetic coil that the current passes through. As the metal teeth move past the coil, its magnetic field is disturbed. This causes a stream of pulses in the current. The Engine Control Module (ECM) can calculate the speed of the engine from the crankshaft's frequency of pulses

Removal & Installation

1. Disconnect the negative battery cable.
2. Disconnect the CKP sensor electrical connector.
3. Remove the CKP sensor retaining bolt (1) and remove the CKP sensor.
   (Tighten: Crankshaft position sensor retaining bolt to 10 N·m)

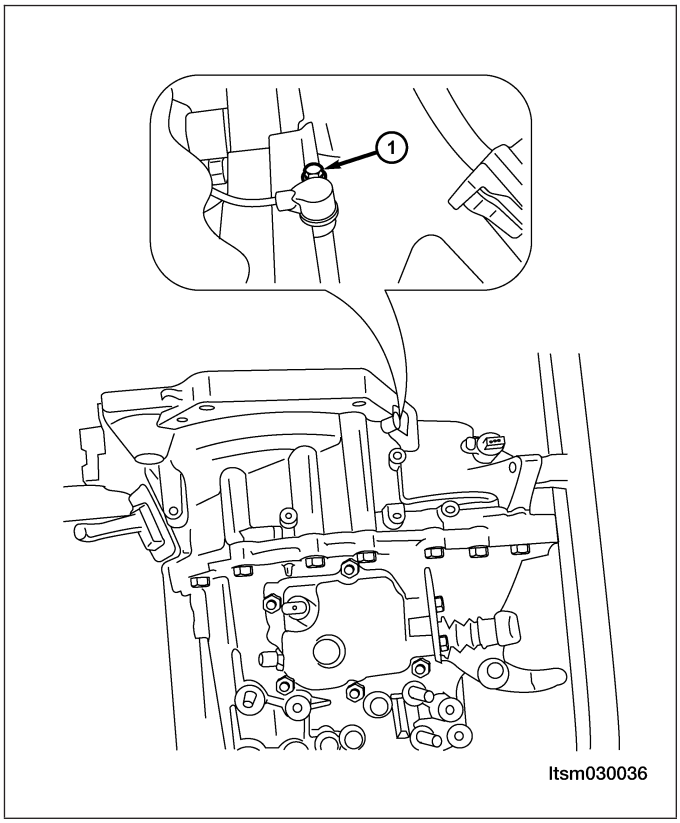

4. Installation is in the reverse order of removal.

Camshaft Position (CMP) Sensor

Description

The Camshaft Position (CMP) sensor senses the protrusion of inlet valve cam sprocket to identify a particular cylinder. The CMP sensor senses the piston position. When the Crankshaft Position (CKP) sensor becomes inoperative, the CMP sensor provides various controls of engine parts instead, utilizing timing of cylinder identification signals. The sensor consists of a permanent magnet and Hall IC.

Downloaded from www.Manualslib.com manuals search engine

Operation

When engine is running, the high and low parts of the teeth causes the gap with the sensor to change. The changing gap causes the magnetic field near the sensor to change. Due to the changing magnetic field, the voltage from the sensor changes. The Engine Control Module (ECM) detects the voltage signal and identify piston position and cylinder timing.

Removal & Installation

1. Disconnect the negative battery cable.
2. Disconnect the CMP sensor electrical connector.
3. Remove the CMP sensor (1) retaining bolt.
   (Tighten: Camshaft position sensor retaining bolt to 7 N·m)
4. Pull the CMP sensor up and take out of the cylinder head cover.
5. Installation is in the reverse order of removal.

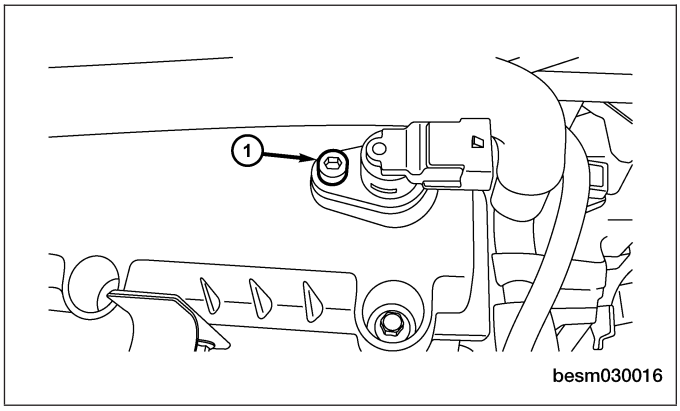

Vehicle Speed Sensor

Description

The vehicle speed sensor is mounted to the transaxle housing.

Operation

The vehicle speed sensor generates a signal sent to the Engine Control Module (ECM) and the Transaxle Control Module (TCM) utilize to perform engine and transaxle functions.

Removal & Installation

1. Disconnect the negative battery cable.
2. Disconnect the vehicle speed sensor connector.
3. Remove the vehicle speed sensor mounting bolt (1).
   (Tighten: Vehicle speed sensor mounting bolt to 10 N·m)
4. Remove the vehicle speed sensor carefully.
5. Installation is in the reverse order of removal.

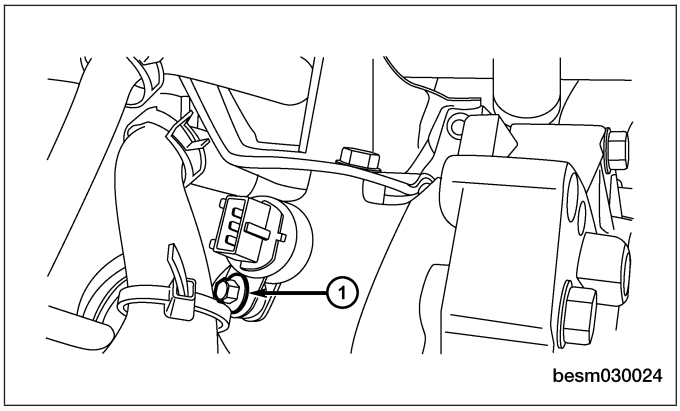

Accelerator Sensor

Description

The accelerator sensor is located on the right front crossbeam.

Downloaded from www.Manualslib.com manuals search engine

Operation

The accelerator sensor monitors the road conditions. It sends a signal to the ECM, the ECM determines if a possible misfire condition exists.

Removal & Installation

1. Disconnect the negative battery cable.
2. Disconnect the accelerator sensor electrical connector.
3. Remove the accelerator sensor (1).

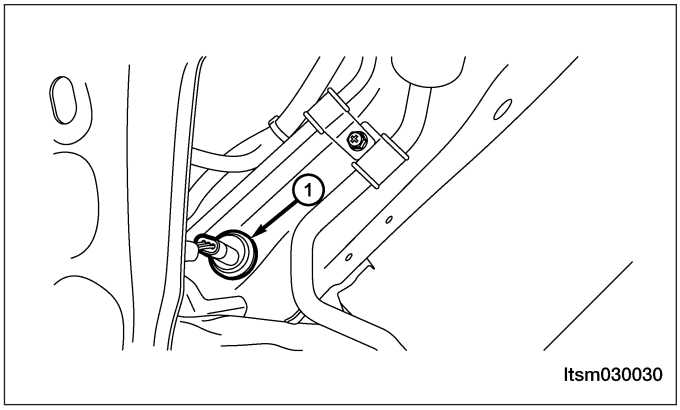

4. Installation is in the reverse order of removal.

Manifold Absolute Pressure Sensor - 1.6L

Description

The Manifold Absolute Pressure (MAP) sensor, is mounted to the front of the engine on the intake manifold.

Operation

The MAP sensor monitors the pressure in the intake manifold. The pressure in the manifold moves a diaphragm connected to resistors which alter their resistance values. The output voltage of the MAP sensor signals the ECM about the pressure in the intake manifold.

Removal & Installation

1. Disconnect the negative battery cable.

Downloaded from www.Manualslib.com manuals search engine

2. Disconnect the MAP sensor electrical connector.
3. Remove the MAP sensor mounting bolt (1).
   (Tighten: MAP sensor mounting bolt to 6 N·m)
4. Remove the MAP sensor.
5. Installation is in the reverse order of removal.

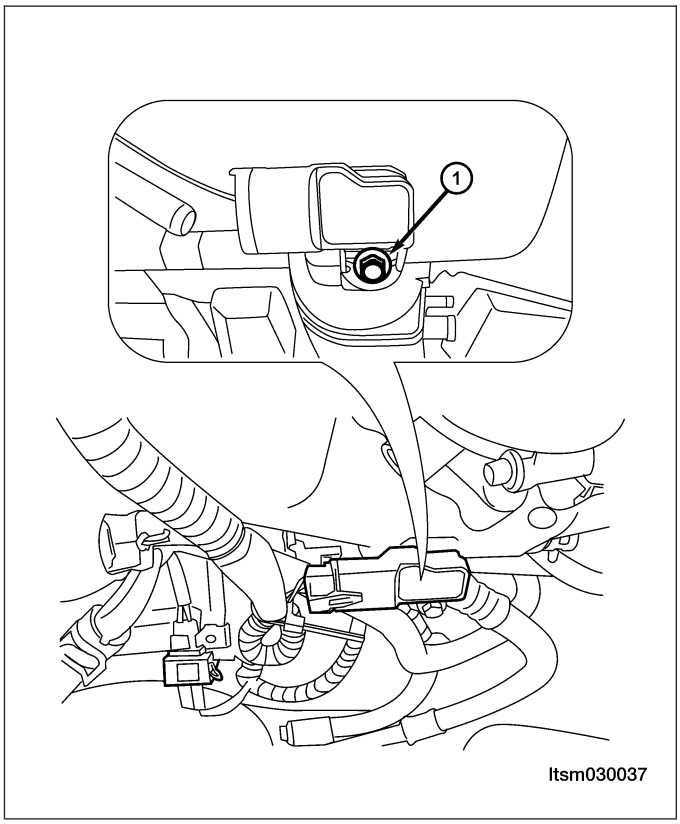

Air Flow Sensor - 1.8L

Description

The air flow sensor is placed in the air intake hose. The air flow sensor measures the intake flow rate by measuring a part of the entire intake flow. The air flow sensor converts the amount of air drawn into the engine into a voltage signal. The Engine Control Module (ECM) needs to know intake air volume to calculate engine load. This is necessary to determine how much fuel to inject.

Operation

The air flow sensor controls the temperature of the hot wire to a certain amount. The heat generated by the hot wire is reduced as the intake air flows around it. The more air, the greater the heat loss. Therefore, the electric current supplied to the hot wire is changed to maintain the temperature of the hot wire as air flow increases. The ECM detects the air flow by means of this voltage signal change.

Removal & Installation

1. Disconnect the negative battery cable.
2. Remove the engine cover.
3. Disconnect the air flow sensor electrical connector.

Downloaded from www.Manualslib.com manuals search engine

4. For 2.0L engine, remove the air flow sensor retaining bolts (1).
   (Tighten: Air flow sensor retaining bolts to 5 N·m)

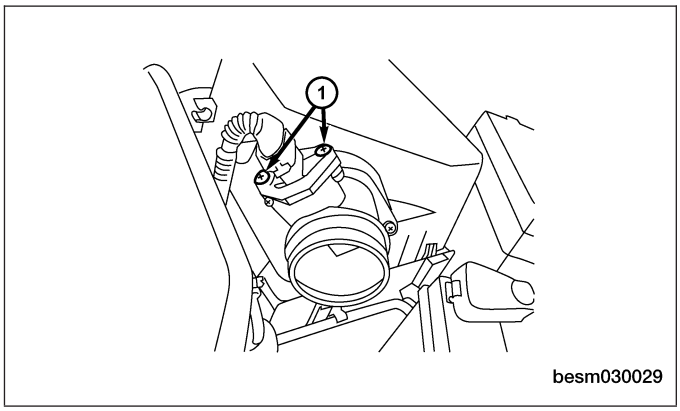

5. Pull sensor up and take out of the air cleaner case.
6. Installation is in the reverse order of removal.

Accelerator Pedal Position Sensor

Description

The Accelerator Pedal Position (APP) sensor is located inside the accelerator pedal. The accelerator pedal position sensor can not be disassembled by itself. The accelerator pedal must be replaced as a unit.

Operation

The accelerator pedal position (APP) sensor on the accelerator pedal works according to the Hall principal. the sensor is integrated into the pedal lever axis. It consists of a shaft with a ring magnet. This rotates in a printed circuit board with a stator in the fixed Hall elements. This produces a change in the voltage. The accelerator pedal position sensor is supplied with 5 V from the Engine Control Module (ECM). The information regarding accelerator position is supplied to the ECM by means of two voltages.

Removal & Installation

1. Disconnect the negative battery cable.
2. Remove the instrument panel lower trim panel.

Downloaded from www.Manualslib.com manuals search engine

3. Disconnect the APP sensor electrical connector (2).
4. Remove the three APP sensor mounting bolts (1). (Tighten: APP sensor mounting bolts to 11 N·m)
5. Remove the APP sensor with the pedal.
6. Installation is in the reverse order of removal.

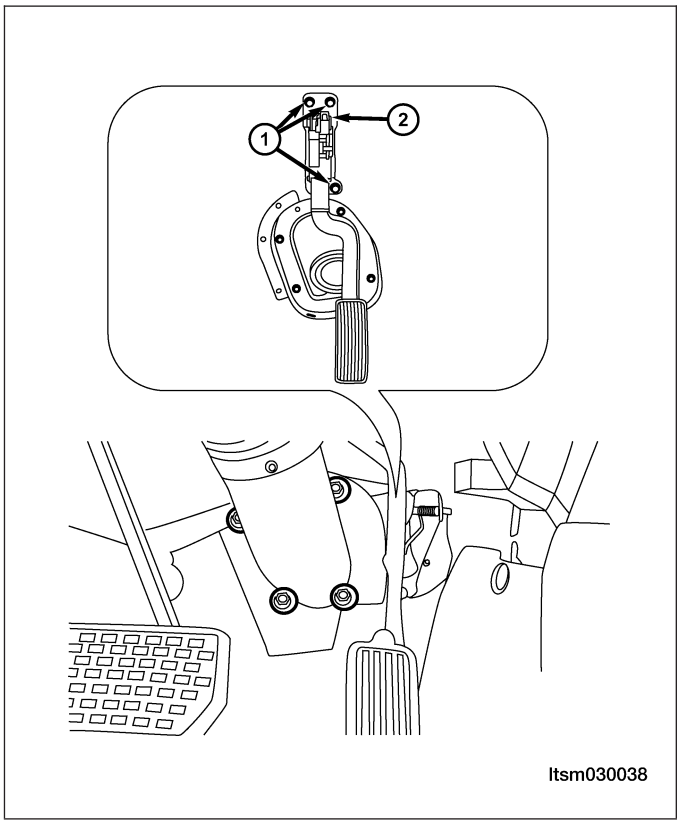

Electronic Throttle Control Actuator

Description

The throttle body is located on the intake manifold. It controls air into the intake manifold. The electronic throttle control actuator consists of throttle control motor, throttle position sensor, etc. The throttle control motor is operated by the Engine Control Module (ECM) and it opens and closes the throttle valve. The throttle position sensor detects the throttle valve position.

Operation

Filtered air from the air cleaner enters the intake manifold through the throttle body. A throttle valve (plate) is used to supply air for idle and driving conditions. The throttle position sensor is part the throttle body. The throttle position sensor signal is used by the ECM to determine throttle position. The ECM controls the electronic throttle control to meter air into the engine. This regulates engine power. The vehicle is in sense a “Drive by Wire” system.

Removal & Installation

1. Remove the engine cover.
2. Disconnect the negative battery cable.

Downloaded from www.Manualslib.com manuals search engine

3. Disconnect the electronic throttle control actuator connector.
4. Remove two hoses on electronic throttle control actuator.
5. Remove four electronic throttle control actuator mounting bolts.
   (Tighten: Electronic throttle control actuator bolts to 10 N·m)
6. Remove the throttle control actuator carefully.
7. Installation is in the reverse order of removal.

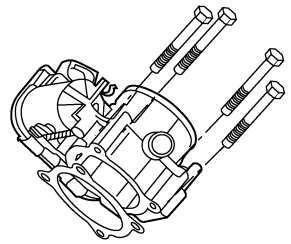

besm030022

Engine Control Module (ECM)

Description

The Engine Control Module (ECM) for this model is serviced only as a complete unit.

Operation

The ECM is a pre-programmed, microprocessor-based digital computer. It regulates ignition timing, air-fuel ratio, emission control devices, charging system, certain transmission features, speed control, air conditioning compressor clutch engagement and idle speed. The ECM can adapt its programming to meet changing operating conditions.

Removal & Installation

1. Disconnect the negative battery cable.
2. Remove the glove box (See Instrument Panel Removal & Installation in Section 15 Body).
3. Disconnect the ECM electrical connector.
4. Remove the ECM retaining bolts (1).
   (Tighten: ECM retaining bolts to 10 N·m)
5. Remove the ECM.
6. Installation is in the reverse order of removal.

Installation Notes:

•

NOTE :
The Immobilizer control module must be matched to the new ECM before the vehicle will start.

Matching Immobilizer Control Module to New Engine Control Module (ECM)

Perform the following to match the Immobilizer control module to the new ECM:

- With the X-431 scan tool, choose T11 series.
- Choose ″immobilize″.
- Choose ″input code″.
- Input the safety code.
- Click the small keyboard.
- Click ″OK″.
- Choose ″Immobilizer adapt″.
- Choose ″read Immobilizer to ECM″ immediately.
- Click ″OK″.

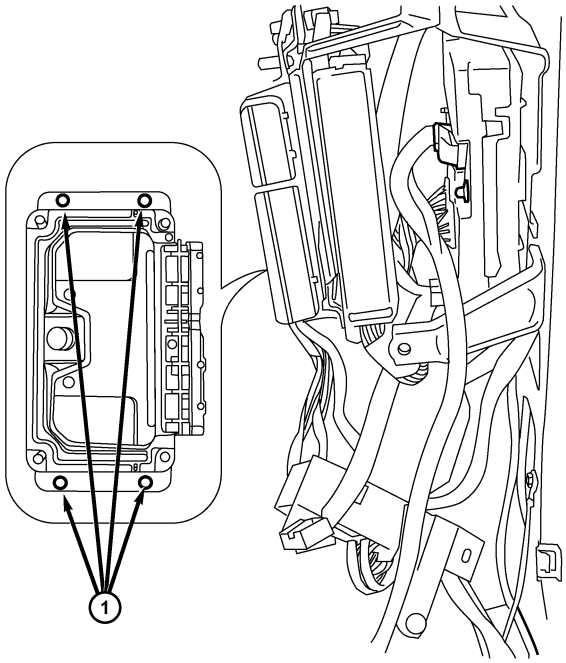

ltsm030025

Downloaded from www.Manualslib.com manuals search engine

2.0L ENGINE CONTROLS

GENERAL INFORMATION 03-229
Description 03-229
Operation 03-229
Electronic Engine Control Input & Output Device Failure Modes 03-230
Specifications 03-231
Special Tools 03-232
Electrical Schematics 03-234
ECM Connector Pin-Out Table 03-245

DIAGNOSIS & TESTING 03-247
Diagnostic Help 03-247
Ground Inspection 03-247
Electronic Throttle Control Actuator Self-Learning Operation Introduction 03-247
Diagnostic Tools 03-248
Diagnostic Trouble Code (DTC) List 03-250

ECM Power Supply and Ground Circuit Test 03-254
Power Supply And Ground Circuit Diagnostic Check 03-254

Diagnostic Trouble Code (DTC) Tests 03-261
P0016 - Camshaft Position-Crankshaft Position Correlation Error 03-261
P0031 - O_2 Sensor 1 Heater Control Circuit Low 03-272
P0032 - O_2 Sensor 1 Heater Control Circuit High 03-277
P0102 - Mass Or Volume Air Flow Circuit Low Input 03-282
P0103 - Mass Or Volume Air Flow Circuit High Input 03-288
P0112 - Intake Air Temperature Circuit Low Input 03-293
P0113 - Intake Air Temperature Circuit High Input 03-297
P0117 - Engine Coolant Temperature Circuit Low Input 03-301
P0118 - Engine Coolant Temperature Circuit High Input 03-305
P0122 - Throttle Position Sensor A Circuit Low Input 03-310
P0123 - Throttle Position Sensor A Circuit High Input 03-316
P0132 - O_2 Sensor Circuit 1 High Voltage 03-322
P0171 - Fuel Trim System Too Lean 03-326
P0172 - Fuel Trim System Too Rich 03-336
P0201 - Cylinder 1 - Injector Circuit, P0202 - Cylinder 2 - Injector Circuit, P0203 - Cylinder 3 - Injector Circuit, P0204 - Cylinder 4 - Injector Circuit 03-345
P0221 - Throttle Position Sensor B Performance 03-352
P0261 - Cylinder 1 Injector Circuit Low, P0264 - Cylinder 2 Injector Circuit Low, P0267 - Cylinder 3 Injector Circuit Low, P0270 - Cylinder 4 Injector Circuit Low 03-359
P0262 - Cylinder 1 Injector Circuit High, P0265 - Cylinder 2 Injector Circuit High, P0268 - Cylinder 3 Injector Circuit High, P0271 - Cylinder 4 Injector Circuit High 03-366
P0321 - Distributor Engine Speed In Phase Circuit Performance 03-373
P0324 - Knock Control System Error 03-378
P0343 - Camshaft Position Sensor Circuit High Input 03-383
P0444 - Evaporative Emission System Purge Control Valve Circuit Open 03-389
P0506 - Idle Control System RPM Lower Than Expected 03-394
P0604 - Internal Controller Module Random Access Memory (RAM) Error, P0605 - Internal Controller Module ROM Test Error, P0606 - ECM Processor 03-396
P0602 - ECM Programming Error 03-398
P0645 - A/C Clutch Relay Circuit 03-400
P1545 - Throttle Position Control Performance 03-405
P2138 - Pedal Position Sensor Performance 03-413
U0001 - High Speed CAN Defective 03-420

ON-VEHICLE SERVICE 03-427

Engine Coolant Temperature (ECT) Sensor 03-427
Description 03-427
Operation 03-427
Removal & Installation 03-427

Knock Sensor 03-428
Description 03-428
Operation 03-428
Removal & Installation 03-428

Oxygen Sensor 03-428
Description 03-428
Operation 03-428
Upstream Oxygen Sensor 03-429
Downstream Oxygen Sensor 03-429
Removal & Installation - Upstream Oxygen Sensor 03-429
Removal & Installation - Downstream Oxygen Sensor 03-429

Crankshaft Position (CKP) Sensor 03-430
Description 03-430
Operation 03-430
Removal & Installation 03-430

Downloaded from www.Manualslib.com manuals search engine

Camshaft Position (CMP) Sensor 03-431
Description 03-431
Operation 03-431
Removal & Installation 03-431

Air Flow Sensor 03-431
Description 03-431
Operation 03-431
Removal & Installation 03-431

Accelerator Sensor 03-432
Description 03-432
Operation 03-432
Removal & Installation 03-432

Speed Control System 03-432
Description 03-432
Operation 03-433
Electrical Schematics 03-434

Accelerator Pedal Position (APP) Sensor 03-438
Description 03-438
Operation 03-438
Removal & Installation 03-438

Electronic Throttle Control Actuator 03-439
Description 03-439
Operation 03-439
Removal & Installation 03-439

Engine Control Module (ECM) 03-440
Description 03-440
Operation 03-440
Removal & Installation 03-440

Downloaded from www.Manualslib.com manuals search engine

GENERAL INFORMATION

Description

The Engine Control Module (ECM) utilizes integrated circuitry and information carried on the Controller Area Network (CAN) data bus along with many hard wired inputs to monitor many sensors and switches inputs throughout the vehicle. In response to those inputs, the internal circuitry and programming of the ECM allow it to control and integrate many electronic functions and features of the vehicle through both hard wired outputs and the transmission of electronic message outputs to other electronic modules in the vehicle over the CAN data bus.

The following are the input and output components monitored by the ECM. The monitored functions include components from the engine, ignition, transaxle, air conditioning, or any other ECM supported subsystem.

ECM Inputs

- Brake Switch Sensor
- A/C Pressure Switch
- Camshaft Position (CMP) Sensor
- Crankshaft Position (CKP) Sensor
- Engine Coolant Temperature (ECT) Sensor
- Intake Air Temperature (IAT) Sensor
- Air Flow Sensor
- Throttle Position Sensor (integral with Electronic Throttle Control Actuator)
- Power Steering Switch
- Accelerator Pedal Position (APP) Sensor
- Knock Sensor
- Oxygen Sensor (Upstream & Downstream)
- Clutch Pedal Switch (manual transaxle only)

ECM Outputs

- Canister Control Valve
- Fuel Injectors
- Fuel Pump Relay
- Electronic Throttle Control Actuator
- Ignition Coil
- A/C Compressor
- Cooling Fan
- Oxygen Sensor heating coil (Upstream & Downstream)

Operation

The ECM monitors components and circuits and tests them in various ways depending on the hardware, function, and type of signal. For example, analog inputs such as throttle position or engine coolant temperature are typically checked for opens, shorts and out-of-range values. This type of monitoring is carried out continuously. Some digital inputs like vehicle speed or crankshaft position rely on rationality checks - checking to see if the input value makes sense at the current engine operating conditions. These types of tests may require monitoring several components and can only be carried out under appropriate test conditions.

The ECM is a pre-programmed, microprocessor-based digital computer. It regulates ignition timing, air-fuel ratio, emission control devices, charging system, certain transmission features, speed control, air conditioning compressor clutch engagement and idle speed. The ECM can adapt its programming to meet changing operating conditions.

Downloaded from www.Manualslib.com manuals search engine

Electronic Engine Control Input & Output Device Failure Modes

NUMBER	ITEM	FAILURE MODE	CORRECTION
1	CKP	• Engine is hard to start. • The engine RPM will be limited after the engine starts. • The highest RPM is less than 3800. • Excessive exhaust emissions. • No ignition signal to the ECM. • The tachometer does not work. • Rough engine operation.	Replace
2	CMP	• The fuel injector ON time may vary from 720 degrees to 360 degrees. • The sensor output is not correct, the MIL light will turn on when with the second revolution after the engine starts. • Engine is hard to start. • The highest RPM is less than 4000.	Replace
3	APPS	• The MIL light will turn on. • Poor acceleration. • The engine RPM will be limited after the engine starts.	Replace
4	ECT	• Engine hard to start when cold. • Engine hard to start when hot. • Poor driving capability. • If the sensor circuit is shorted to power, the engine will run under the default values. • The temperature gauge indicates too high. • The temperature gauge indicates too low. • The cooling fan operates continuously on high speed. • The high temperature warning lamp will flash when the IP indicates low temperature.	Replace
5	MAF	• The cooling fan will operate for approximately 60 seconds on high speed after the ignition switch is turned off. • Poor acceleration. • Poor driving capability.	Replace
6	O_2 Senser	• Poor fuel economy. • Excessive exhaust emissions. • Sluggish acceleration. • Poor driving capability.	Replace
7	Knock Sensor	• The engine produces an engine knock. • Overheated engine. • Excessive exhaust emissions. • Poor fuel economy. • Lack of engine power. • Internal engine damage.	Replace
8	ECM	• Unstable engine idle. • Poor acceleration. • Unable to start. • High engine idle. • The engine exhaust exceeds emission standards. • Engine is hard to start. • Air conditioner does not operate. • Fuel injector control failure. • Engine stalls out.	Replace
9	Ignition Coil	• Unstable idle. • Lack of engine power. • Poor fuel economy. • Excessive exhaust emissions. • Weak spark.	Replace

Downloaded from www.Manualslib.com manuals search engine

NUMBER	ITEM	FAILURE MODE	CORRECTION
10	Fuel Injector	• Unstable idle. • Lack of engine power. • Poor acceleration. • Engine will not start. • Plugged injector.	Replace
11	TPS	• Poor acceleration. • The MIL light will turn on.	Replace
12	EVAP	• The engine base fuel closed-loop control self-learning will be shut off. • The engine idle air control self-learning will be shut off. • Unstable idle or high idle.	Replace
13	Fuel Pump	• Noisy fuel pump operation. • Poor acceleration. • Engine will not start.	Replace
14	MAP	• Poor acceleration. • Unstable idle. • Rough engine operation.	Replace
15	IAT	• Intake air temperature will be equal to the coolant temperature.	Replace
16	Cooling Fan	• High engine temperature. • Poor air conditioner performance.	Replace
17	Accelerator Sensor	• Misfire • Poor driving capability. • Rough engine operation.	Replace

Specifications

Torque Specifications

DESCRIPTION	TORQUE (N·m)
Engine Coolant Temperature Sensor	20
Knock Sensor	20
Oxygen Sensors	45
Crankshaft Position Sensor	10
Camshaft Position Sensor	7
Air Flow Sensor	5
Engine Control Module	10
Accelerator Pedal Position Sensor	11
Electronic Throttle Control Actuator	10
Vehicle Speed Sensor	10

Downloaded from www.Manualslib.com manuals search engine

Special Tools

Diagnostic Scan Tool X-431	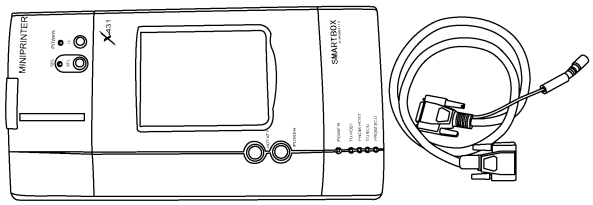
Engine Analyzer KES-200	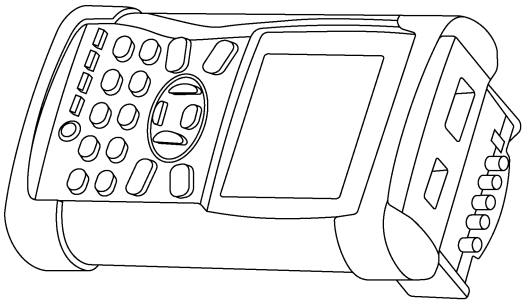
Digital Multimeter Fluke 15B & 17B	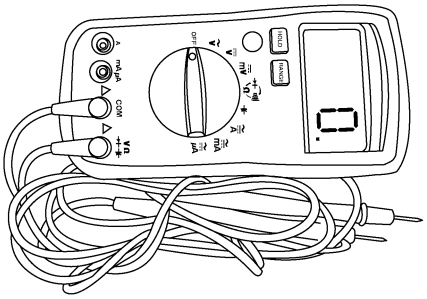

Downloaded from www.Manualslib.com manuals search engine

Compression Gauge	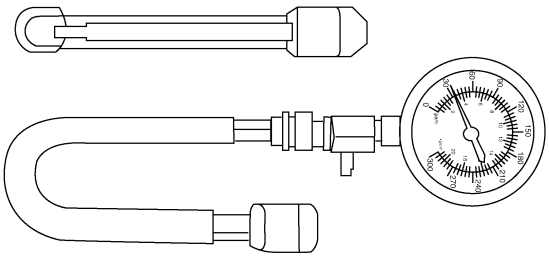 besm030009
Fuel Pressure Gauge	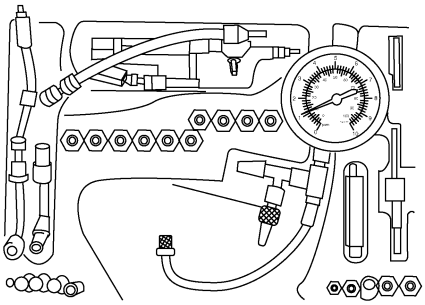 besm030008

Downloaded from www.Manualslib.com manuals search engine

Electrical Schematics

Electronic Engine Controls (Page 1 of 11)

ENGINE CONTROL SYSTEM - WITH ACTECO 2.0L WITH DP0 SYSTEM

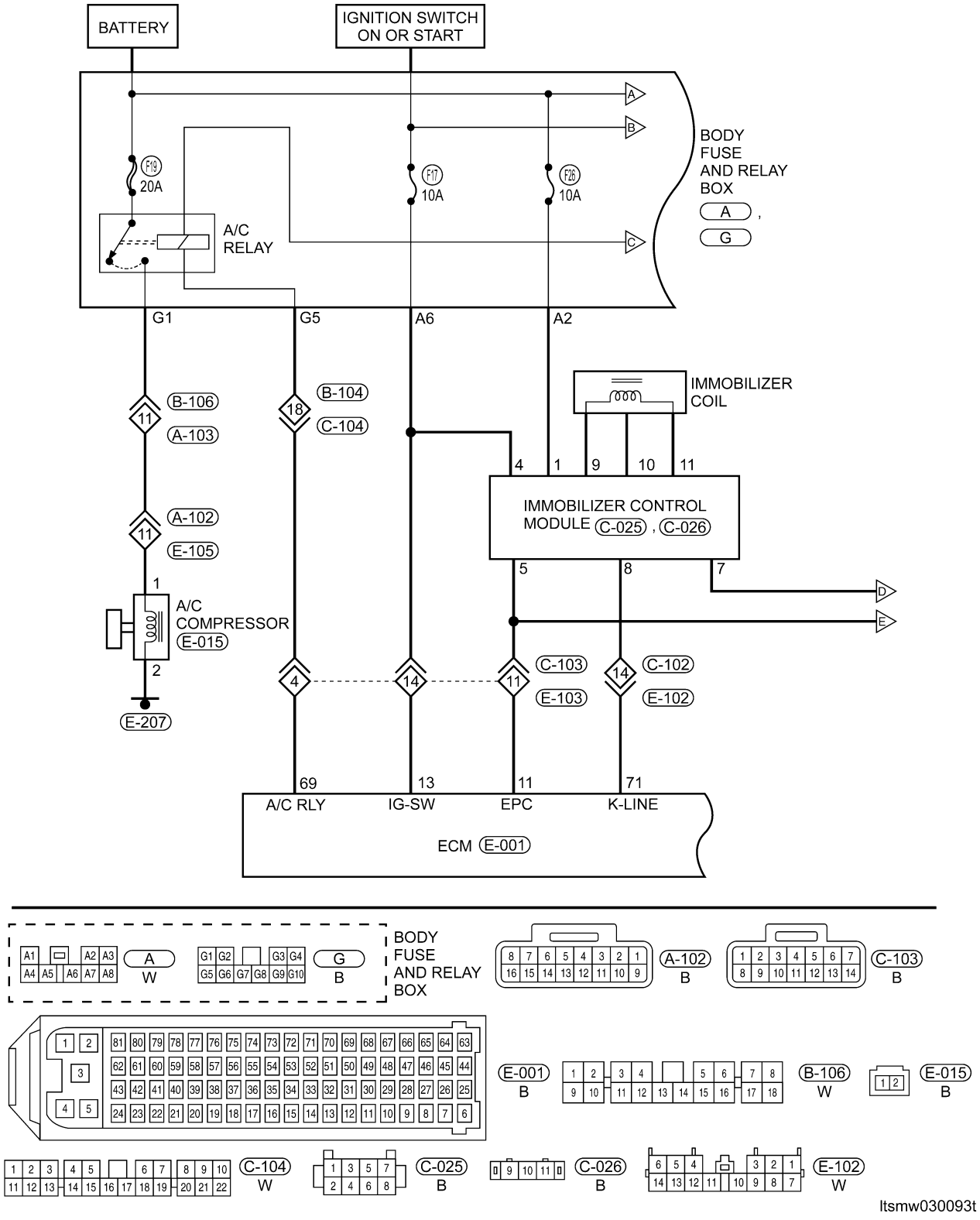

Downloaded from www.Manualslib.com manuals search engine

Electronic Engine Controls (Page 2 of 11)

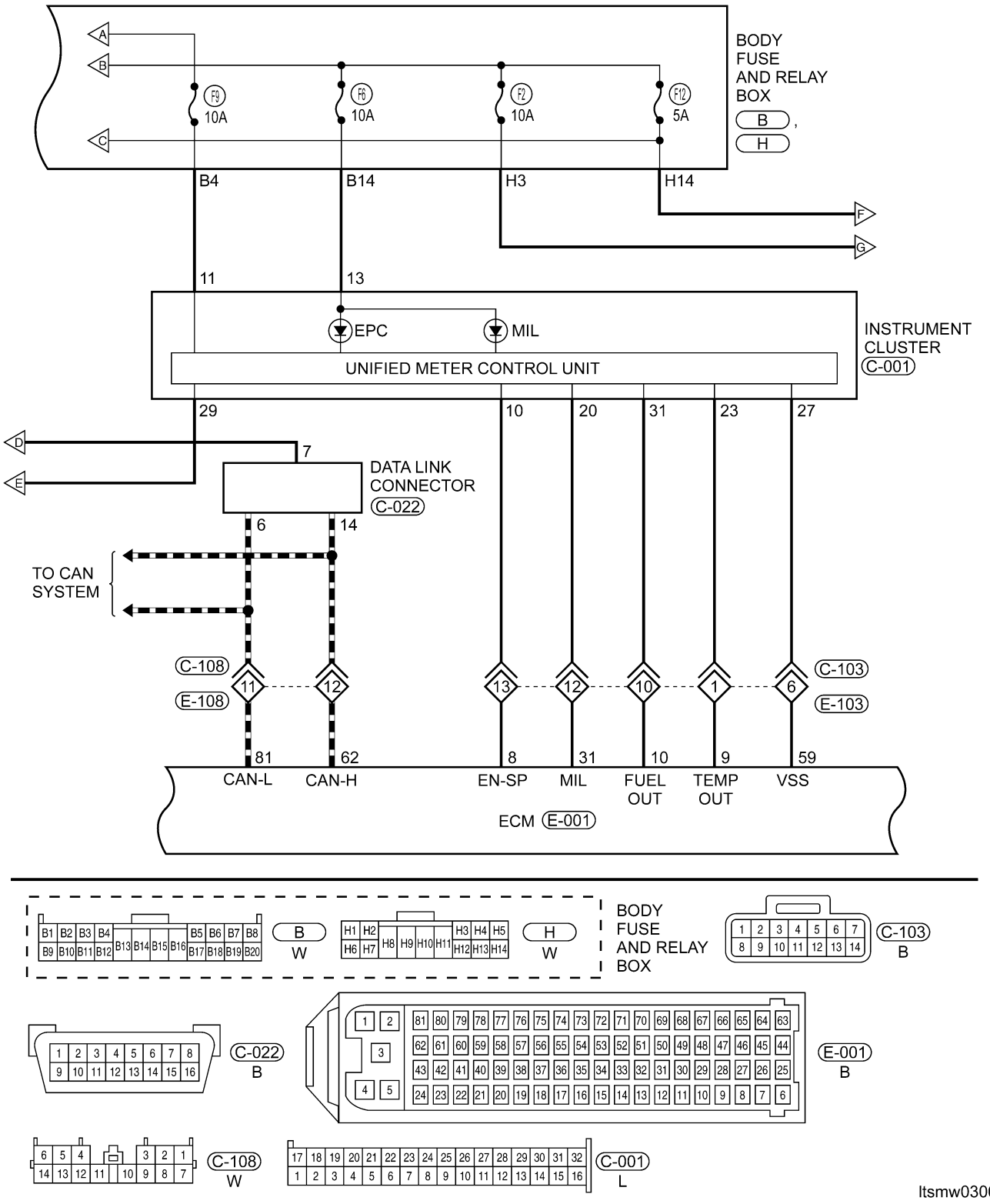

Downloaded from www.Manualslib.com manuals search engine

Electronic Engine Controls (Page 3 of 11)

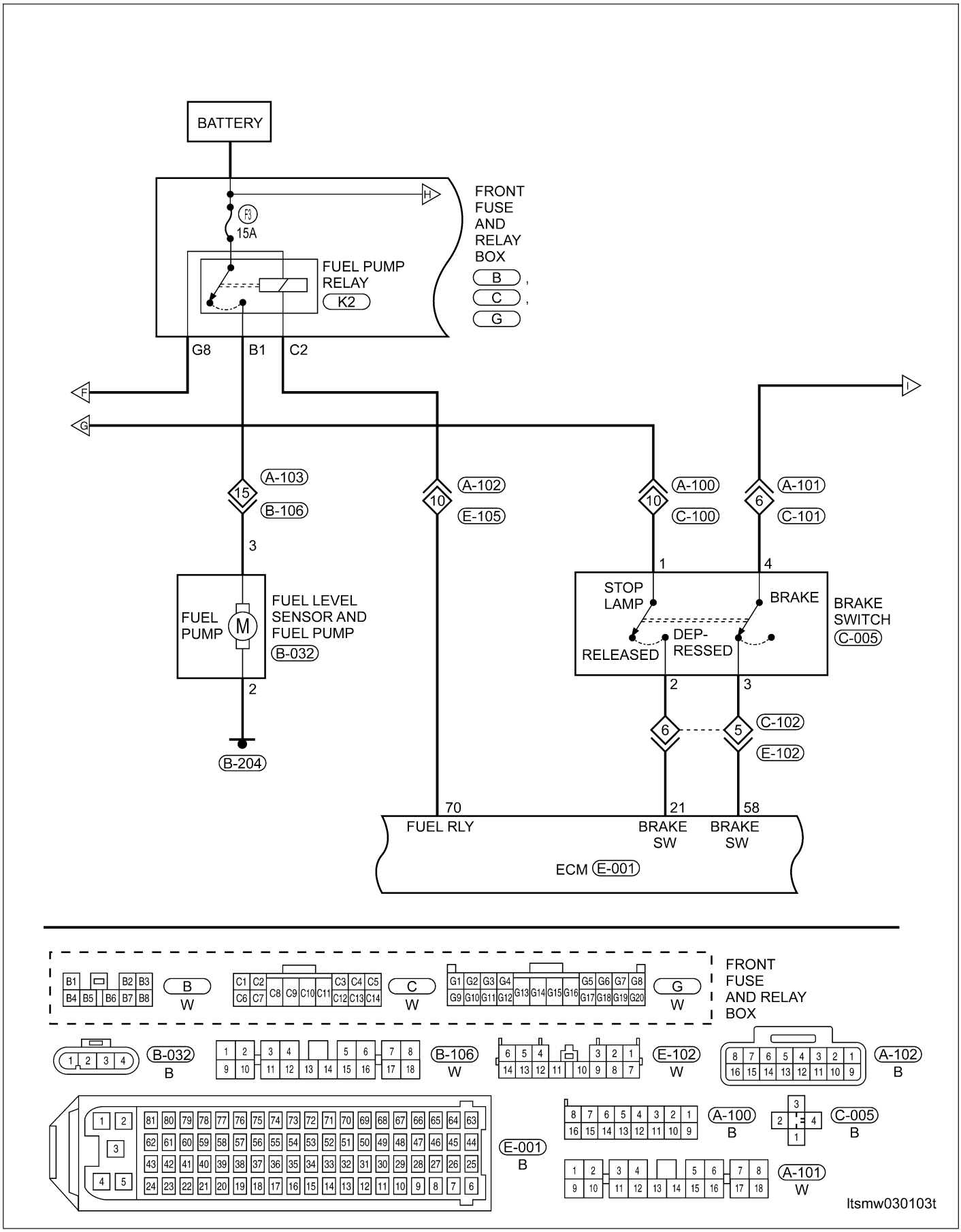

Downloaded from www.Manualslib.com manuals search engine

Electronic Engine Controls (Page 4 of 11)

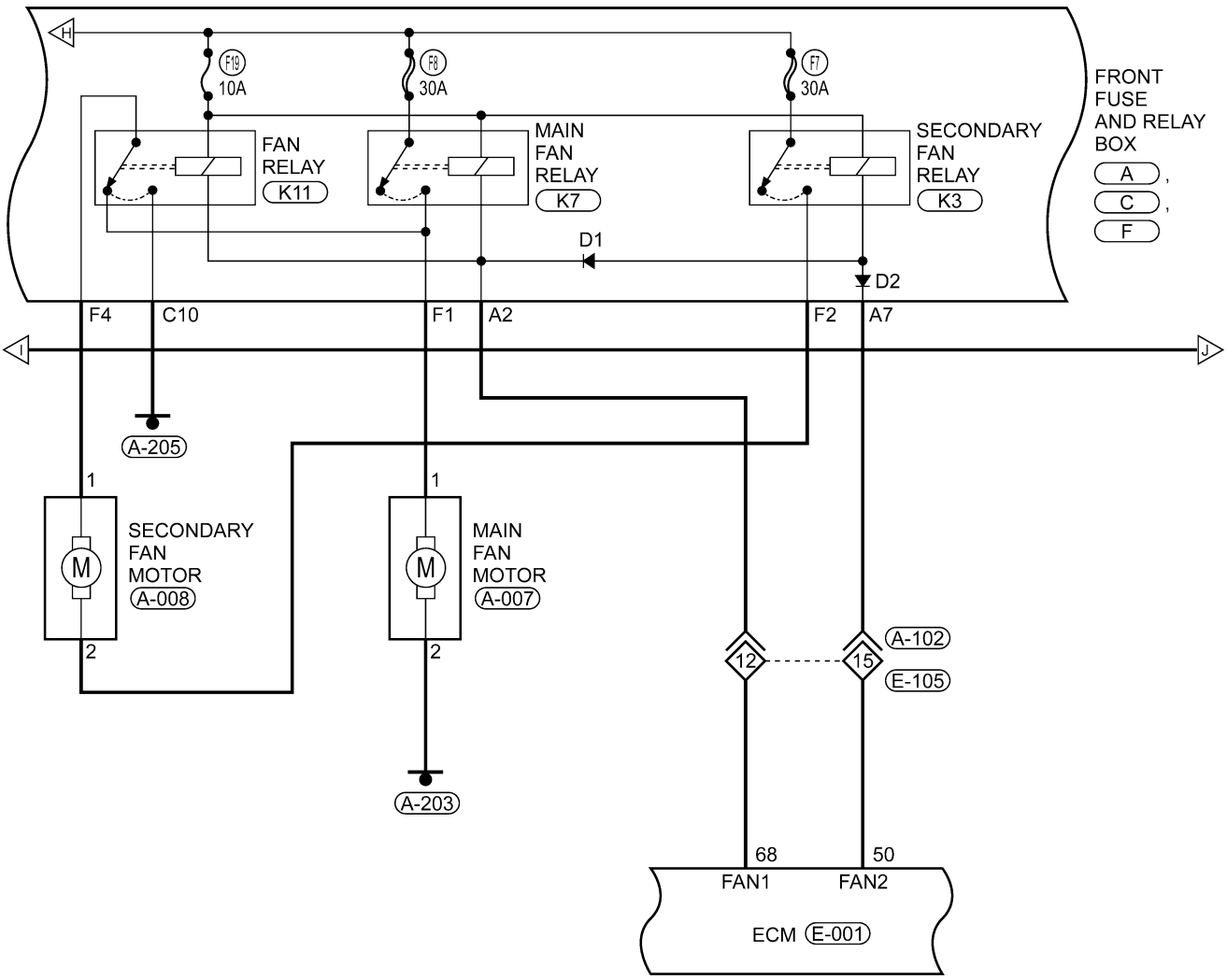

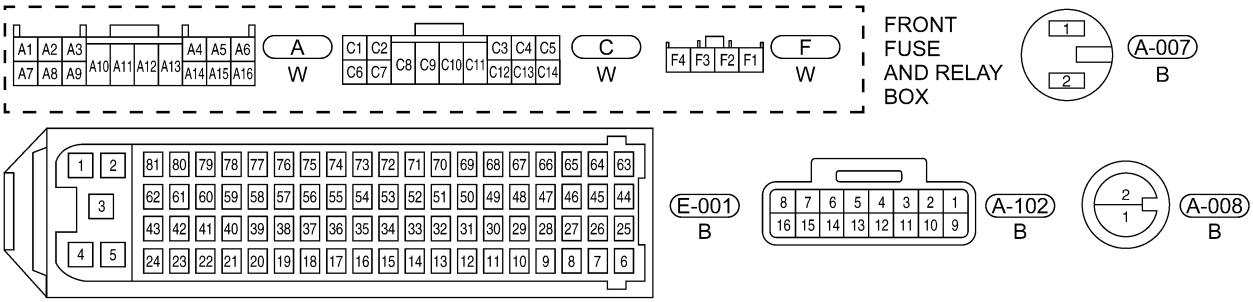

ltsmw030095t

Downloaded from www.Manualslib.com manuals search engine

Electronic Engine Controls (Page 5 of 11)

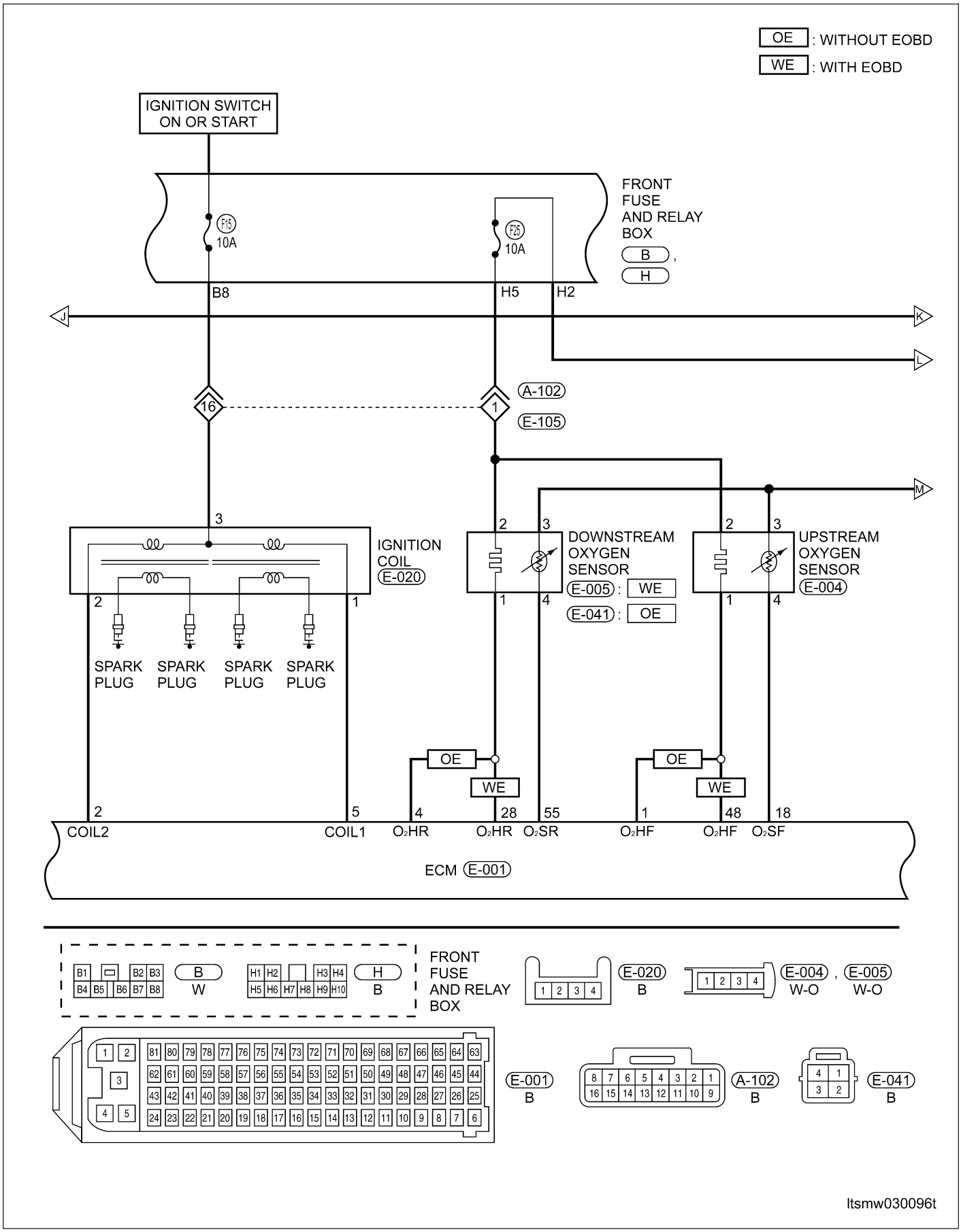

Downloaded from www.Manualslib.com manuals search engine

Electronic Engine Controls (Page 6 of 11)

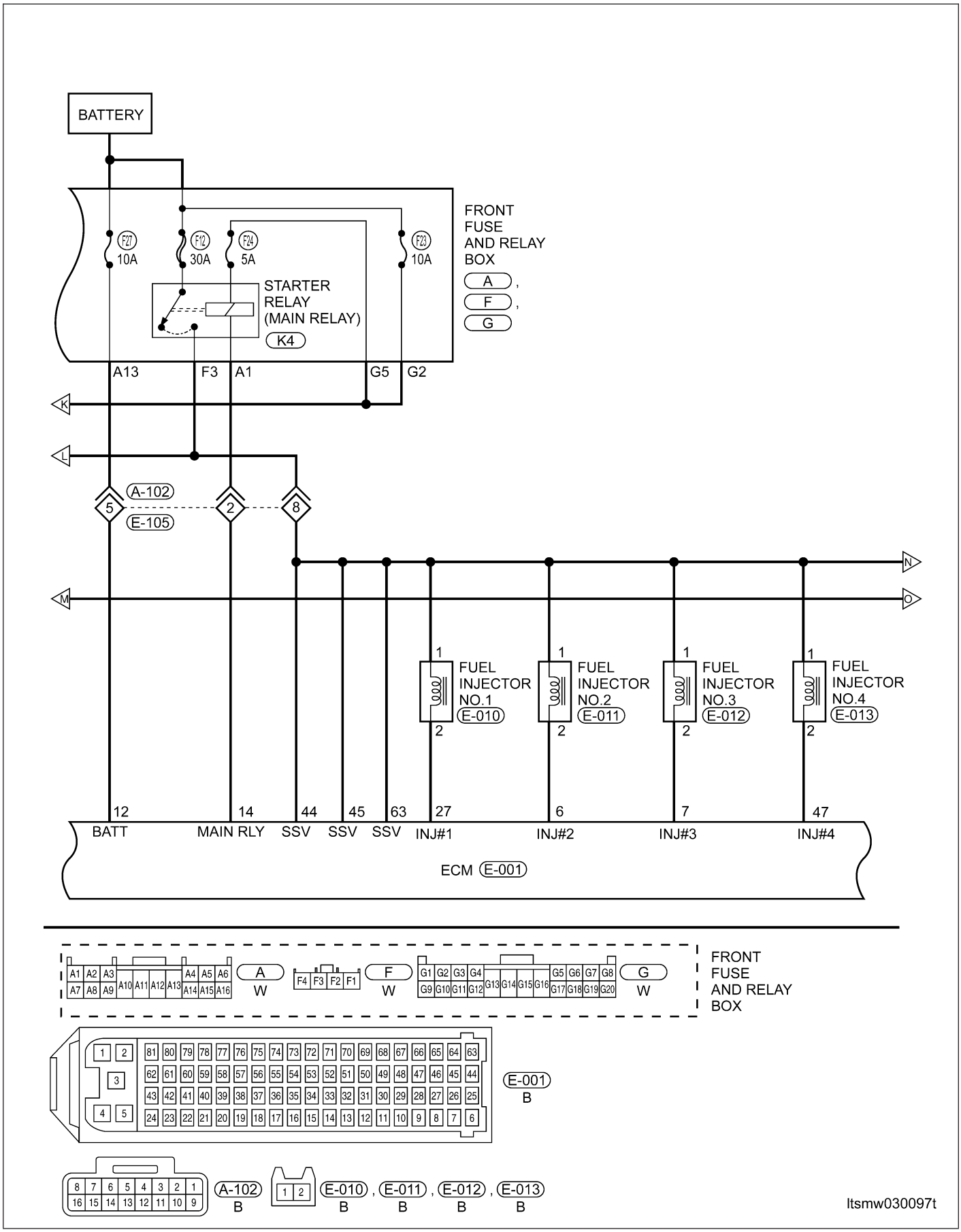

Downloaded from www.Manualslib.com manuals search engine

Electronic Engine Controls (Page 7 of 11)

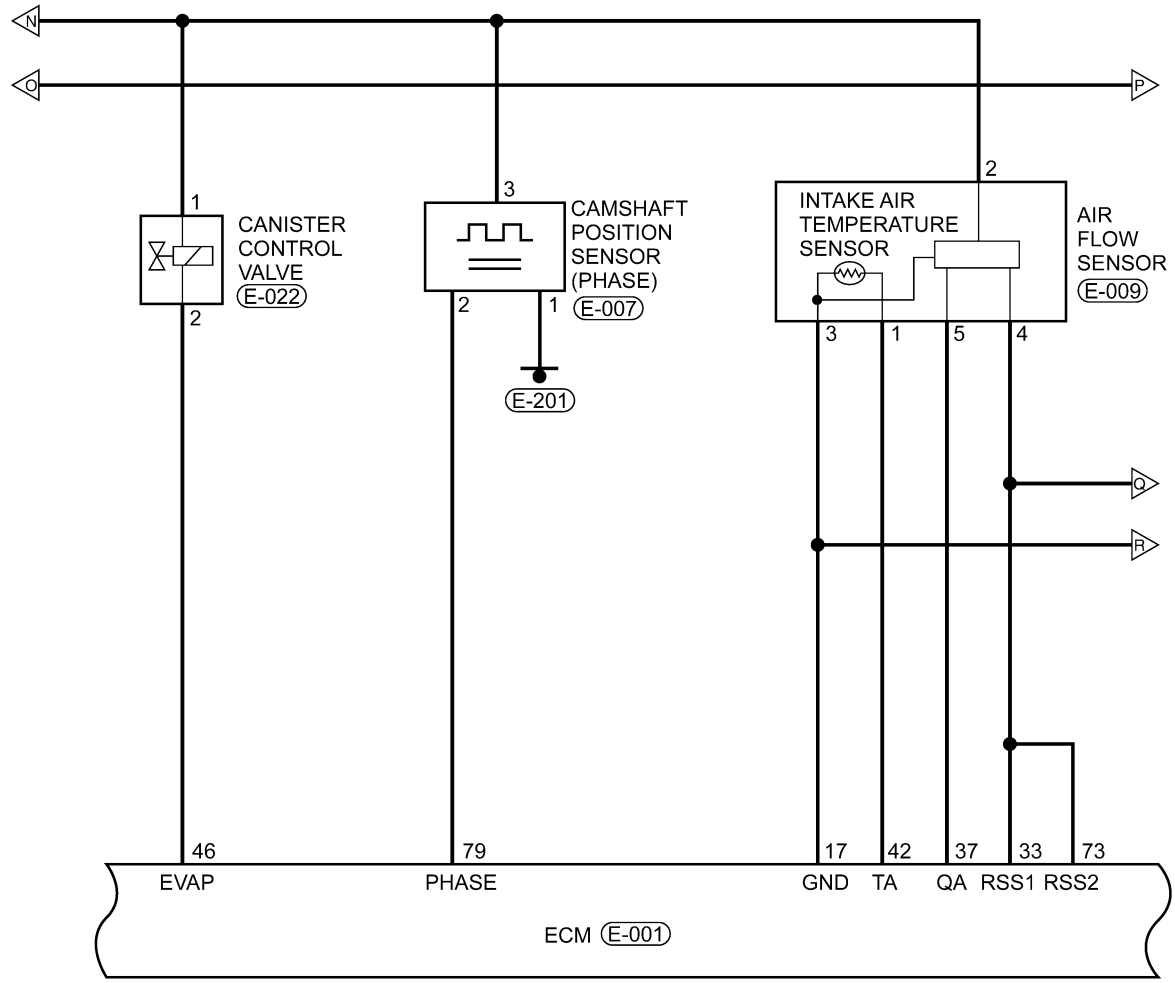

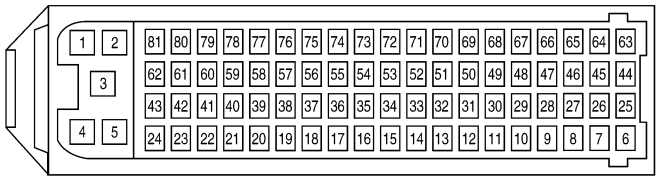

E-001 B

E-022 B

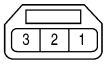

E-007 B

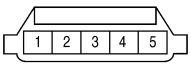

E-009 B

ltsmw030098t

Downloaded from www.Manualslib.com manuals search engine

Electronic Engine Controls (Page 8 of 11)

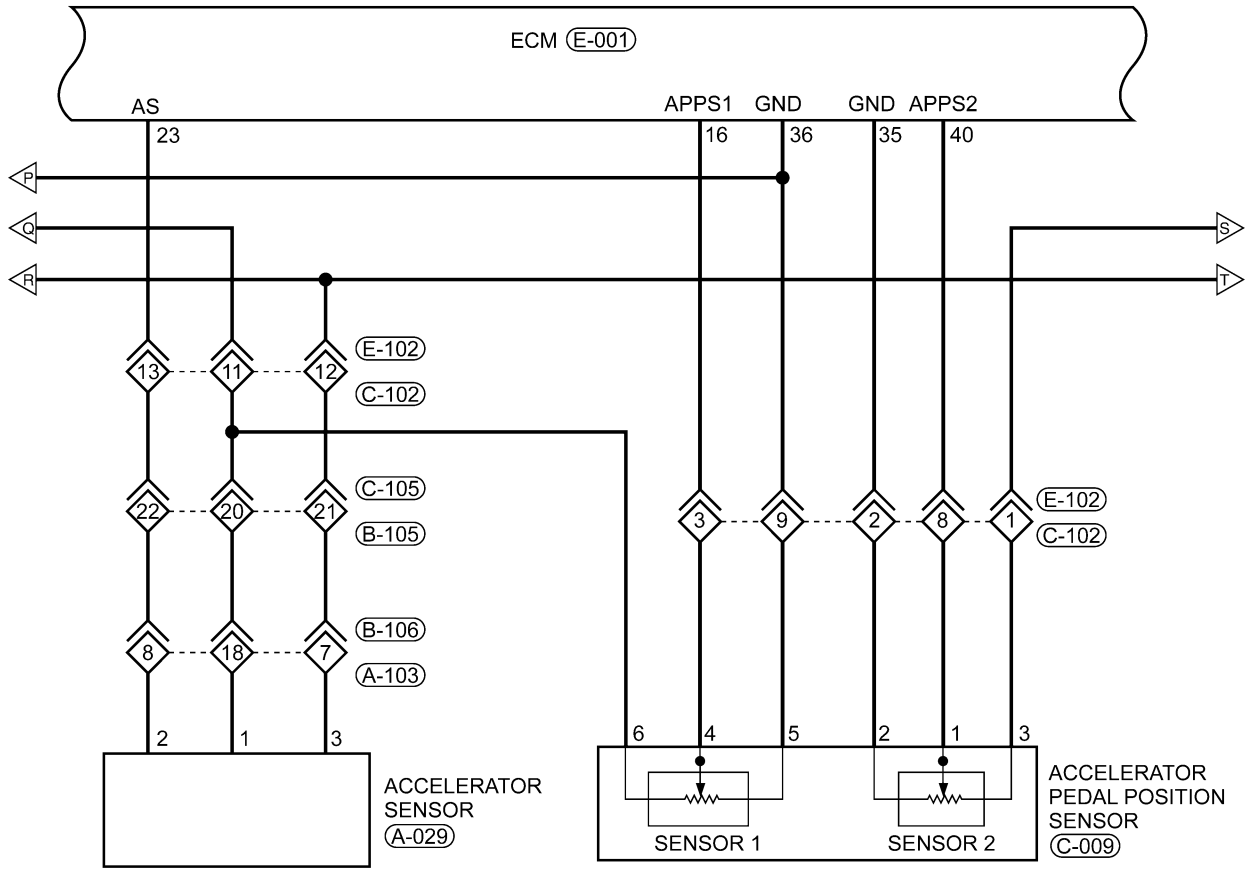

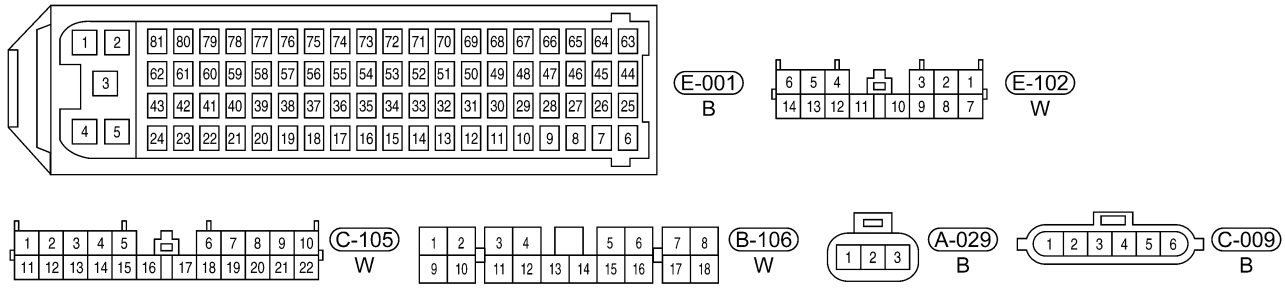

ltsmw030099t

Downloaded from www.Manualslib.com manuals search engine

Electronic Engine Controls (Page 9 of 11)

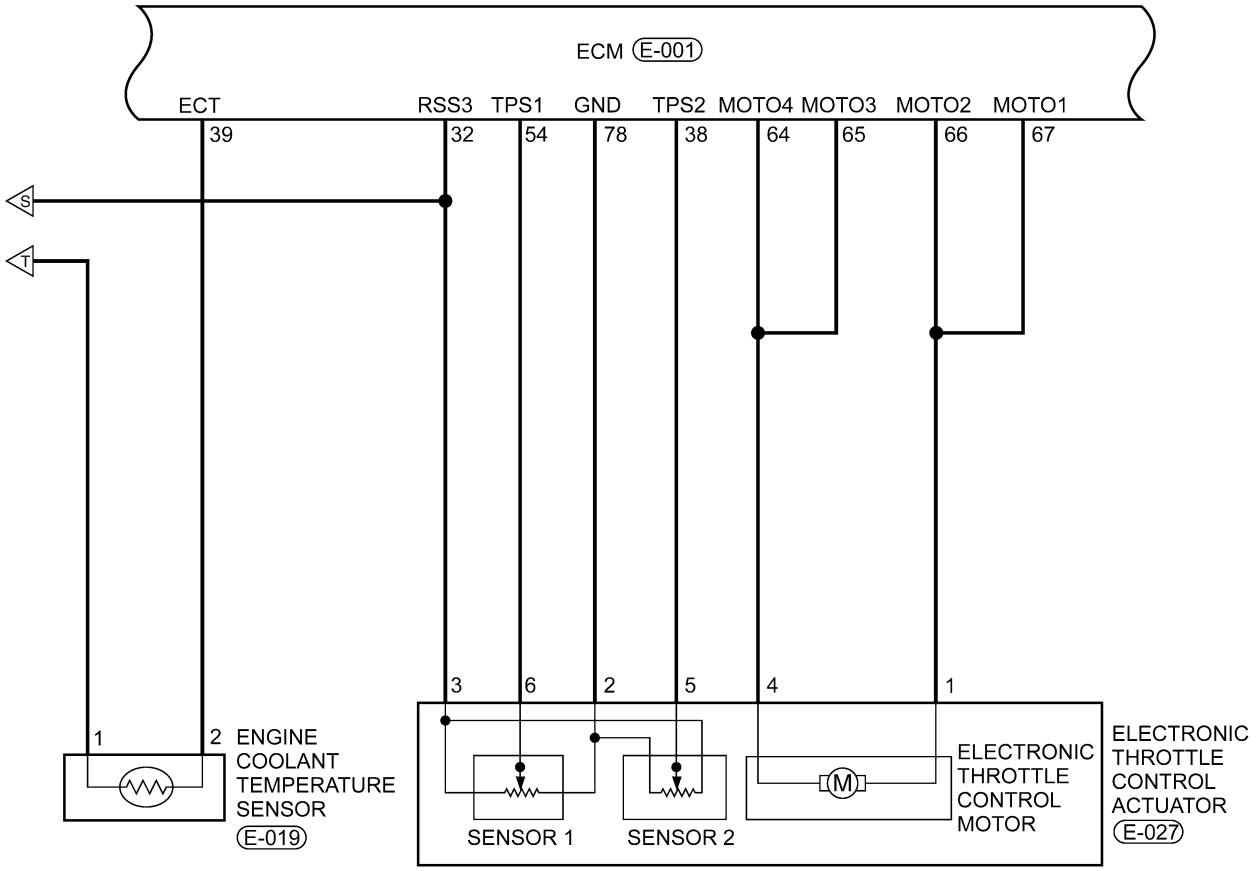

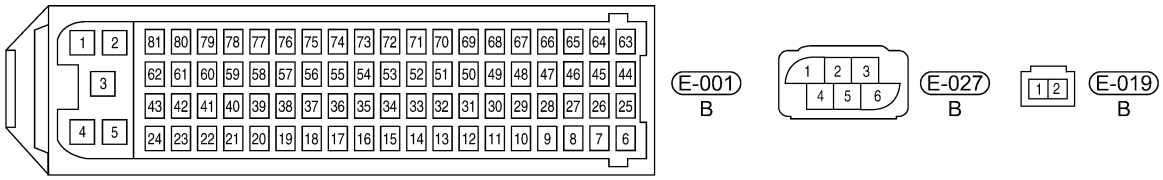

ltsmw030100t

Downloaded from www.Manualslib.com manuals search engine

Electronic Engine Controls (Page 10 of 11)

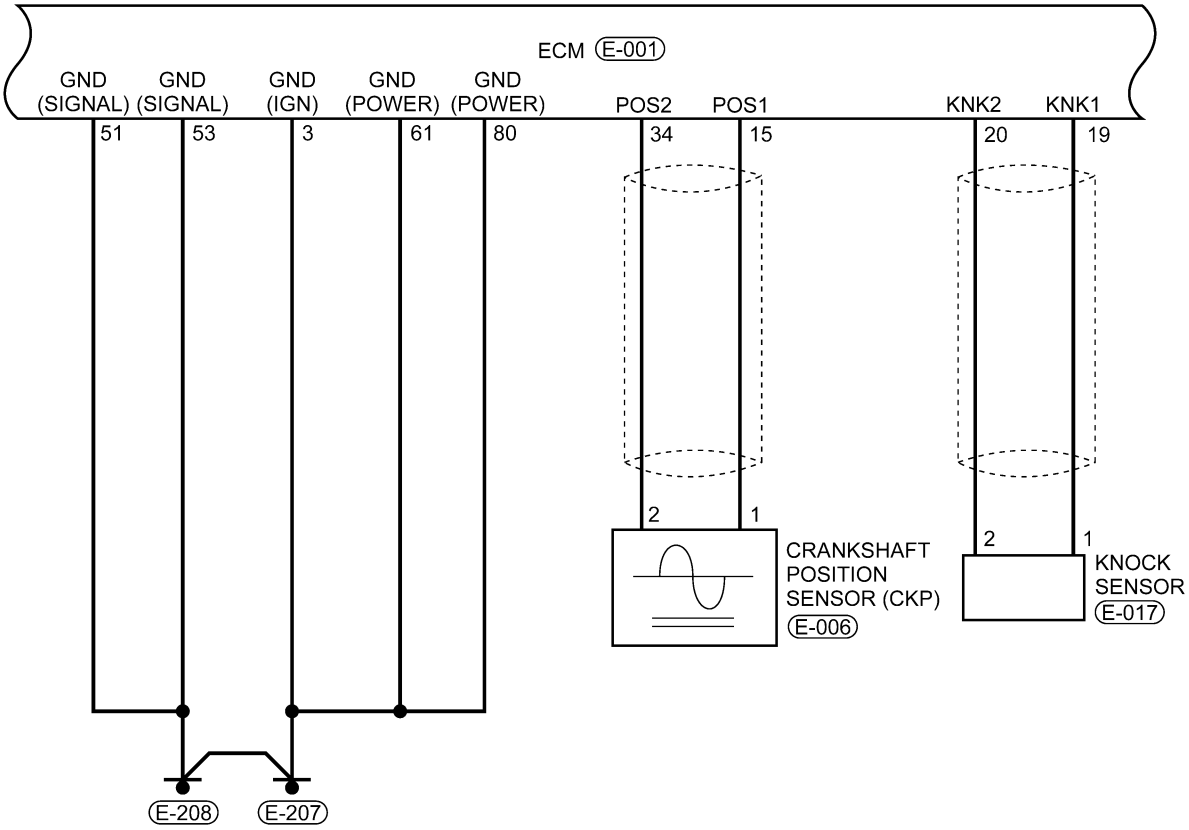

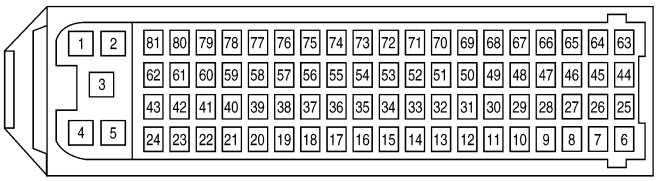

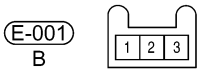

E-001 B

E-006 , E-017 B L

ltsmw030101t

Downloaded from www.Manualslib.com manuals search engine

Electronic Engine Controls (Page 11 of 11)

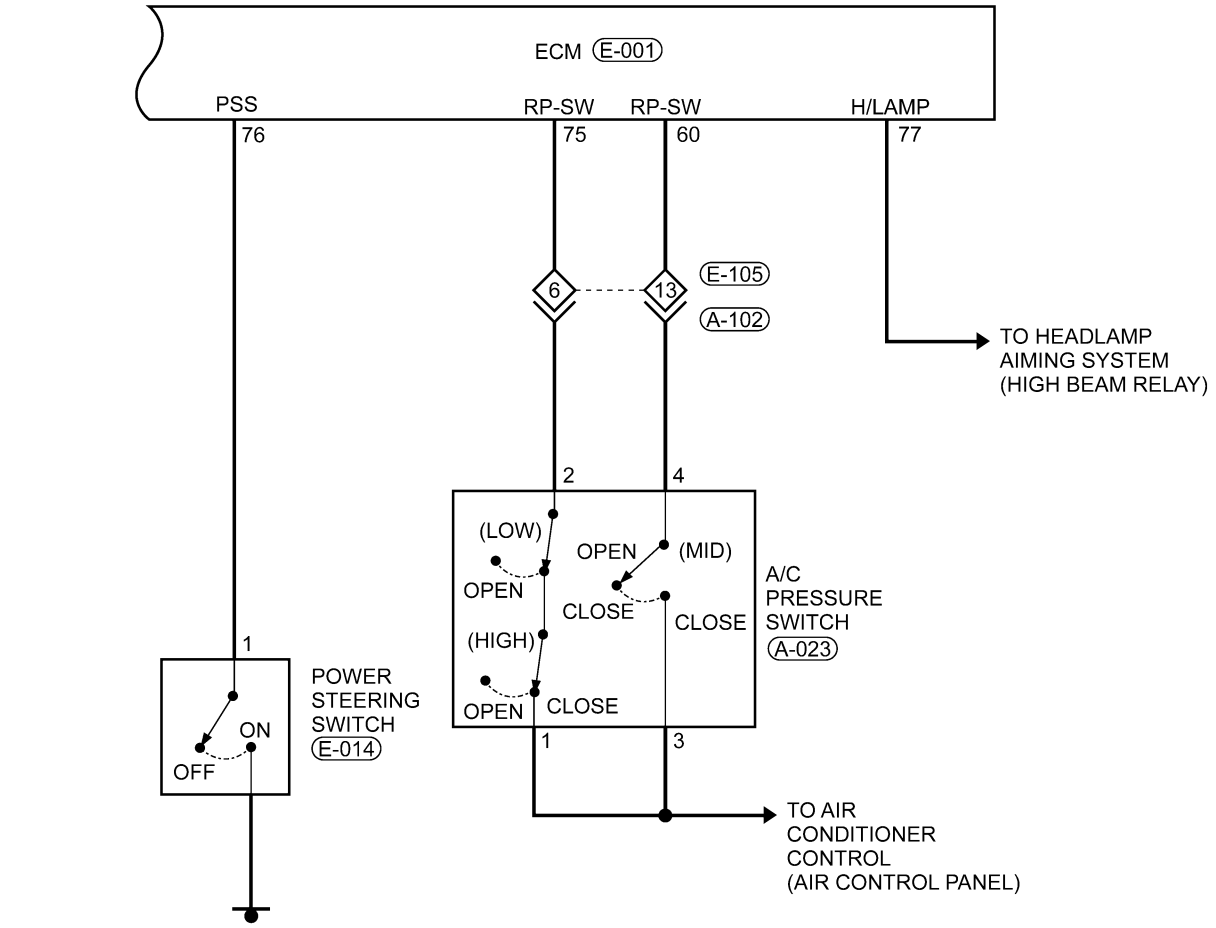

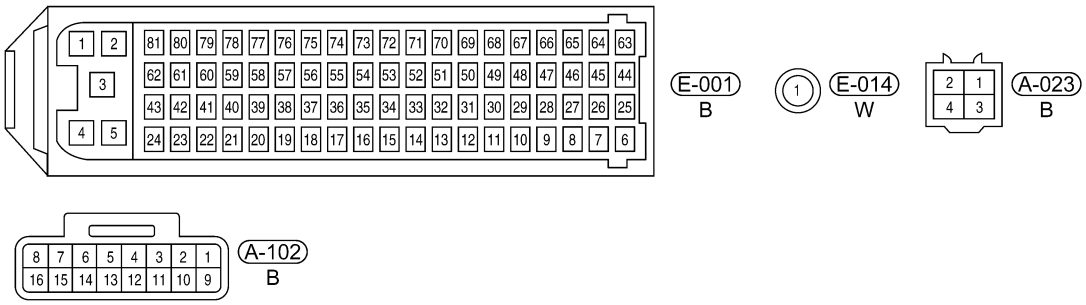

ltsmw030102t

Downloaded from www.Manualslib.com manuals search engine

ECM Connector Pin-Out Table

ECM PIN-OUT TABLE

PIN	CIRCUIT IDENTIFICATION	PIN	CIRCUIT IDENTIFICATION
1	(With EOBD) Upstream Oxygen Sensor Heater (Without EOBD)	42	Intake Air Temperature Sensor
2	Ignition Coil 2	43	-
3	GND (Ignition)	44	Switched Supply Voltage
4	(With EOBD) Downstream Oxygen Sensor Heater (Without EOBD)	45	Switched Supply Voltage
5	Ignition Coil 1	46	Canister Control Valve
6	Injector 2	47	Injector 4
7	Injector 3	48	Upstream Oxygen Sensor Heater (With EOBD) (Without EOBD)
8	Engine Speed Output	49	-
9	Coolant Temperature Output	50	Fan Relay Control
10	Fuel Consumption Output	51	GND (Signal)
11	EPC Lamp	52	-
12	Continuous Supply Voltage	53	GND (Signal)
13	Ignition Switch	54	Electronic Throttle Control Actuator
14	EMS Relay (Main Relay)	55	Downstream Oxygen Sensor
15	Crankshaft Position Sensor	56	-
16	Accelerator Position Sensor	57	-
17	Sensor (GND)	58	Brake Switch
18	Upstream Oxygen Sensor	59	-
19	Knock Sensor 1	60	A/C Middle Pressure Switch
20	Knock Sensor 2	61	GND (Power)
21	Brake Switch	62	CAN-H
22	-	63	Switched Supply Voltage
23	Accelerator Sensor	64	Electronic Throttle Control Actuator
24	-	65	Electronic Throttle Control Actuator
25	-	66	Electronic Throttle Control Actuator
26	-	67	Electronic Throttle Control Actuator
27	Injector 1	68	Fan Relay Control 2
28	Downstream Oxygen Sensor Heater (With EOBD) (Without EOBD)	69	Air Compressor Relay
29	-	70	Fuel Pump Relay
30	-	71	Diagnostic Link K
31	MIL Lamp	72	-
32	Regulated Sensor Supply 3	73	Regulated Sensor Supply 2
33	Regulated Sensor Supply 1	74	-
34	Crankshaft Position Sensor	75	A/C Stand By

Downloaded from www.Manualslib.com manuals search engine

PIN	CIRCUIT IDENTIFICATION	PIN	CIRCUIT IDENTIFICATION
35	Sensor (GND)	76	Power Steering Switch
36	Sensor (GND)	77	Headlamp Switch
37	Air Flow Sensor	78	Sensor (GND)
38	Electronic Throttle Control Actuator (Position Sensor)	79	Camshaft Position Sensor
39	Engine Coolant Temperature Sensor	80	GND (Power)
40	Accelerator Pedal Position Sensor	81	CAN-L
41	-		

Downloaded from www.Manualslib.com manuals search engine

DIAGNOSIS & TESTING

Diagnostic Help

1. Confirm that the malfunction is current and carry-out the diagnostic tests and repair procedures.
2. If the Diagnostic Trouble Code (DTC) cannot be deleted, it is a current fault.
3. Use a digital multimeter to perform voltage readings on the Electronic Fuel Injection (EFI) system.
4. Program the vehicle Immobilizer control module whenever the Engine Control Module (ECM) is replaced.
5. The scan tool connects to the Data Link Connector (DLC) and communicates with the ECM.
6. If the failure is intermittent perform the following:
   - Check for loose connectors.
   - Look for any chafed, pierced, pinched, or partially broken wires.
   - Monitor the scan tool data relative to this circuit and wiggle test the wiring and connectors.
   - Look for the data to change or for the DTC to reset during the wiggle test.
   - Look for broken, bent, pushed out or corroded terminals.
   - Inspect the sensor and mounting area for any condition that would result in an incorrect signal, such as damage or foreign material.
7. Remove the ECM from the troubled vehicle and install in a new vehicle and test. If the DTC can not be deleted, the ECM is malfunctioning. If the DTC can be deleted, return the ECM to the original vehicle.

Ground Inspection

Ground connections are very important to the proper operation of electrical and electronic circuits. Ground connections are often exposed to moisture, dirt and other corrosive elements. The corrosion (rust) can become an unwanted resistance. This added resistance can alter the way a circuit works.

Electronically controlled circuits are very sensitive to proper grounding. A loose or corroded ground can drastically affect an electronically controlled circuit. A poor or corroded ground can effect the circuit. Perform the following when inspecting a ground connection:

1. Remove the ground bolt or screw.
2. Inspect all mating surface for tarnish, dirt, rust, etc.
3. Clean as required to assure good contact.
4. Reinstall bolt or screw securely.
5. Inspect for ″add-on″ accessories which may be interfering with the ground circuit.
6. If several wires are crimped into one ground eyelet terminal, check for proper crimps. Make sure all of the wires are clean, securely fastened and providing a good ground path. If multiple wires are crimped to one eyelet, make sure no excess wire insulation has been crimped creating a bad ground.

Electronic Throttle Control Actuator Self-Learning Operation Introduction

EPC Lamp Control Strategy

The EPC lamp will be on for a few seconds and turn off after the ignition switch is turned on and the engine is not running. After the engine started, the EPC lamp will go off if the DTC is not existent in ECM. If the internal self-check failed, the EPC lamp will continue to light.

Electronic Throttle Control Actuator Self-Learning Condition

- Engine stopped and the ignition switch is on.
- Vehicle speed is 0 km/h.
- The Engine Coolant Temperature (ECT) is between 5.25°C and 100.5°C.
- The intake air temperature is more than 5.25°C.
- The accelerator pedal fully released.
- Battery voltage is more than 12 V.

Electronic Throttle Control Actuator Self-Learning Operating Procedure

Turn the ignition switch on for 10 seconds, then turn the ignition switch off. During the procedure, do not operate any other components.

Downloaded from www.Manualslib.com manuals search engine

Self-Learning Components

Perform the self-learning process when the following repairs have been made:
- Replaced the ECM
- ECM which was disconnected and reconnected
- Replaced the Accelerator Pedal
- Replaced the Electronic Throttle Control Actuator

Self-Learning Operating Procedure

Turn the ignition switch on for 10 seconds, then turn the ignition switch off. During the procedure, do not operate any other components.

Self-Learning Condition

The self-learning condition as the ″Electronic Throttle Control Actuator Self-Learning Condition″.

CAUTION:
Make sure that the Electronic Throttle Control Actuator self-learning process lasts for at least 10 seconds according to the Electronic Throttle Control Actuator self-learning condition. If the self-learning process fails, the engine can't be started or the EPC lamp will be on. If this condition occurs, perform the Self-Learning operating again after the DTCs be erased in ECM.

Diagnostic Tools

- Scan Tool X-431
- Engine Analyzer KES-200
- Digital Multimeter
- Jumper Wire

Downloaded from www.Manualslib.com manuals search engine

Hardware Requirements

The hardware configuration of X-431 is as follows:

Diagnostic Scan Tool Configuration

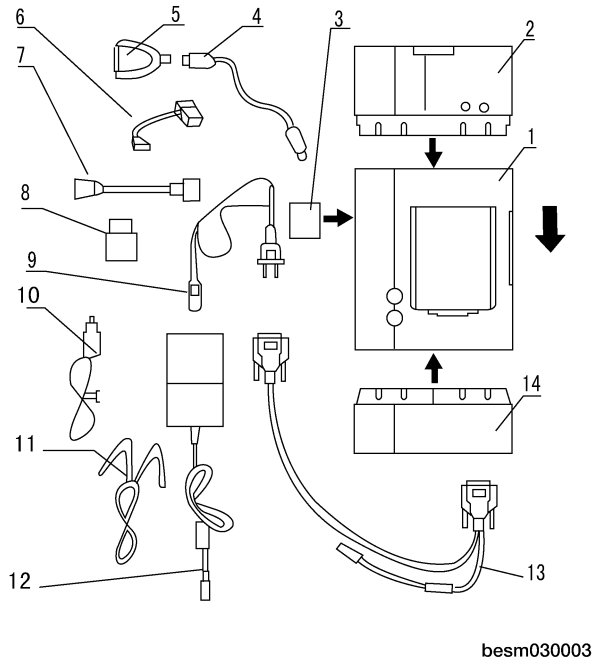

ITEM	NAME	DESCRIPTION
1	X-431 Main Unit	To Display Operational Buttons, Test Results, Help Information, etc.
2	Mini-Printer	To Print Test Results. (Optional)
3	CF Card	To Store Diagnostic Software and Data
4	USB Cable	To Connect CF Card Reader/Writer and Computer
5	CF Card Reader/Writer	To Read or Write Data On The CF Card
6	Mitsubishi-12+16 Pin Connector	To Diagnose Mitsubishi Electronic Control Systems On Chery B11 Series
7	Fiat-3 Pin Connector	To Diagnose Vehicles With Fiat-3 Pin Diagnostic Connector

ITEM	NAME	DESCRIPTION
8	Smart OBDII-16 Pin Connector	To Diagnose Other Systems Of Vehicle With OBDII-16 Pin Diagnostic Connector
9	Power Cord	To Connect AC 100-240 V Outlet and Power Adapter
10	Cigarette Lighter Cable	To Get Power From Vehicle Cigarette Lighter
11	Battery Cable W/Two Clips	To Get Power From Vehicle Battery
12	Power Adapter	To Convert 100-240 V AC Power Into 12 V DC Power
13	Main Cable	To Connect The Diagnostic Connector and Smartbox
14	Smartbox	To Perform Vehicle Diagnosis

Downloaded from www.Manualslib.com manuals search engine

Diagnostic Trouble Code (DTC) List

DTC	DTC DEFINITION
P000A	″A″ Camshaft Position Slow Response
P000B	″B″ Camshaft Position Slow Response
P0010	″A″ Camshaft Position Actuator Circuit/Open
P0011	″A″ Camshaft Position - Timing Over - Advanced or System Performance
P0012	″A″ Camshaft Position - Timing Over - Retarded
P0013	″B″ Camshaft Position - Actual Circuit/Open
P0014	″B″ Camshaft Position - Timing Over - Advanced or System Performance
P0015	″B″ Camshaft Position - Timing Over - Retarded
P0016	Crankshaft - Camshaft Position Correlation
P0030	O_2 Sensor Heater Control Circuit (Bank 1 Sensor 1)
P0031	O_2 Sensor Heater Control Circuit (Bank 1 Sensor 1) Low
P0032	O_2 Sensor Heater Control Circuit (Bank 1 Sensor 1) High
P0036	O_2 Sensor Heater Control Circuit (Bank 1 Sensor 2)
P0037	O_2 Sensor Heater Control Circuit (Bank 1 Sensor 2) Low
P0038	O_2 Sensor Heater Control Circuit (Bank 1 Sensor 2) High
P0053	O_2 Sensor Heater Resistance (Bank 1 Sensor 1)
P0054	O_2 Sensor Heater Resistance (Bank 1 Sensor 2)
P0101	Mass or Volume Air Flow Circuit Range/Performance
P0102	Mass or Volume Air Flow Circuit Low Input
P0103	Mass or Volume Air Flow Circuit High Input
P0112	Intake Air Temperature Circuit Low Input
P0113	Intake Air Temperature Circuit High Input
P0116	Engine Coolant Temperature Circuit Range/Performance
P0117	Engine Coolant Temperature Circuit Low Input
P0118	Engine Coolant Temperature Circuit High Input
P0121	Throttle/Pedal Position Sensor A Circuit Range/Performance
P0122	Throttle/Pedal Position Sensor A Circuit Low Input
P0123	Throttle/Pedal Position Sensor A Circuit High Input
P0130	O_2 Sensor Circuit Bank 1 - Sensor 1 Malfunction
P0131	O_2 Sensor Circuit Bank 1 - Sensor 1 Low Voltage
P0132	O_2 Sensor Circuit Bank 1 - Sensor 1 High Voltage
P0133	O_2 Sensor Circuit Bank 1 - Sensor 1 Slow Response
P0134	O_2 Sensor Circuit Bank 1 - Sensor 1 No Activity Detected
P0136	O_2 Sensor Circuit Bank 1 - Sensor 2 Malfunction
P0137	O_2 Sensor Circuit Bank 1 - Sensor 2 Low Voltage
P0138	O_2 Sensor Circuit Bank 1 - Sensor 2 High Voltage
P0140	O_2 Sensor Circuit Bank 1 - Sensor 2 No Activity Detected
P0170	Fuel Trim, Bank 1 Malfunction
P0171	Fuel Trim, Bank 1 System too Lean
P0172	Fuel Trim, Bank 1 too Rich
P0201	Cylinder 1 - Injector Circuit
P0202	Cylinder 2 - Injector Circuit

Downloaded from www.Manualslib.com manuals search engine

DTC	DTC DEFINITION
P0203	Cylinder 3 - Injector Circuit
P0204	Cylinder 4 - Injector Circuit
P0219	Engine Overspeed Condition
P0221	Throttle/Pedal Position Sensor/Switch B Range/Performance
P0222	Throttle/Pedal Position Sensor/Switch B Low Input
P0223	Throttle/Pedal Position Sensor/Switch B High Input
P0261	Cylinder 1 - Injector Circuit Low
P0262	Cylinder 1 - Injector Circuit High
P0264	Cylinder 2 - Injector Circuit Low
P0265	Cylinder 2 - Injector Circuit High
P0267	Cylinder 3 - Injector Circuit Low
P0268	Cylinder 3 - Injector Circuit High
P0270	Cylinder 4 - Injector Circuit Low
P0271	Cylinder 4 - Injector Circuit High
P0300	Random/Multiple Cylinder Misfire Detected
P0301	Cylinder 1 Misfire Detected
P0302	Cylinder 2 Misfire Detected
P0303	Cylinder 3 Misfire Detected
P0304	Cylinder 4 Misfire Detected
P0318	Rough Road Sensor ″A″ Signal Circuit
P0321	Ignition/Distributor Engine Speed Input Circuit Range/Performance
P0322	Ignition/Distributor Engine Speed Input Circuit No Signal
P0324	Knock Control System Error
P0327	Knock Sensor 1 Circuit Low Input
P0328	Knock Sensor 1 Circuit High Input
P0340	Camshaft Position Sensor Circuit
P0341	Camshaft Position Sensor Circuit Range/Performance
P0342	Camshaft Position Sensor Circuit Low Input
P0343	Camshaft Position Sensor Circuit High Input
P0420	Catalyst System, Bank 1 Efficiency Below Threshold
P0444	Evaporative Emission System Purge Control Valve Circuit Open
P0458	Evaporative Emission System Purge Control Valve Circuit Low
P0459	Evaporative Emission System Purge Control Valve Circuit High
P0480	Cooling Fan 1 Control Circuit
P0481	Cooling Fan 2 Control Circuit
P0501	Vehicle Speed Sensor Range/Performance
P0506	Idle Control System RPM Lower than Expected
P0507	Idle Control System RPM High than Expected
P0508	Idle Air Control System Circuit Low
P0509	Idle Air Control System Circuit High
P0511	Idle Air Control Circuit
P0532	A/C Refrigerant Pressure Sensor Circuit Low Input
P0533	A/C Refrigerant Pressure Sensor Circuit High Input

Downloaded from www.Manualslib.com manuals search engine

DTC	DTC DEFINITION
P0537	A/C Evaporator Temperature Sensor Circuit Low
P0538	A/C Evaporator Temperature Sensor Circuit High
P0560	System Voltage Malfunction
P0562	System Voltage Low Voltage
P0563	System Voltage High Voltage
P0571	Brake Switch ″A″ Circuit
P0601	Internal Control Module EEPROM Error
P0602	Control Module Programming Error
P0604	Internal Control Module Random Access Memory (RAM) Error
P0605	Internal Control Module ROM Test Error
P0606	ECM Processor
P0627	Fuel Pump ″A″ Control Circuit Open
P0628	Fuel Pump ″A″ Control Circuit Low
P0629	Fuel Pump ″A″ Control Circuit High
P0645	A/C Clutch Relay Circuit
P0646	A/C Clutch Relay Control Circuit Low
P0647	A/C Clutch Relay Control Circuit High
P0650	Malfunction Indicator Lamp Control Circuit
P0688	EMC/ECM Power Relay Sense Circuit Open
P0691	Cooling Fan 1 Control Circuit Low
P0692	Cooling Fan 1 Control Circuit High
P0693	Cooling Fan 2 Control Circuit Low
P0694	Cooling Fan 2 Control Circuit High
P0700	Transmission Control System Malfunction
P0704	Clutch Switch Input Circuit
P1297	Manufacturer Controlled Computer And Auxiliary Outputs
P1336	Engine Torque Control Adaptation at Limit
P1545	Throttle Position Control Malfunction
P1558	Throttle Actuator Electrical Malfunction
P1559	Idle Speed Control Throttle Position Adaptation Malfunction
P1564	Idle Speed Control Throttle Position Low Voltage during Adaptation
P1565	Idle Speed Control Throttle Position Lower Limit not Attained
P1568	Idle Speed Control Throttle Position Mechanical Malfunction
P1579	Idle Speed Control Throttle Position Adaptation not Started
P1604	Internal Control Module Driver Error
P1610	Manufacture Controlled Computer and Auxiliary Outputs
P1611	Manufacture Controlled Computer and Auxiliary Outputs
P1612	Manufacture Controlled Computer and Auxiliary Outputs
P1613	Manufacture Controlled Computer and Auxiliary Outputs
P1614	Manufacture Controlled Computer and Auxiliary Outputs
P1651	Manufacture Controlled Computer and Auxiliary Outputs
P2106	Throttle Actuator Control System Forced Limited Power
P2122	Throttle/Pedal Position Sensor/Switch D Circuit Low Input

Downloaded from www.Manualslib.com manuals search engine

DTC	DTC DEFINITION
P2123	Throttle/Pedal Position Sensor/Switch D Circuit High Input
P2127	Throttle/Pedal Position Sensor/Switch E Circuit Low Input
P2128	Throttle/Pedal Position Sensor/Switch E Circuit High Input
P2138	Accelerator Pedal Position Sensor Signal Correlation Error
P2177	System Too Lean off Idle
P2178	System Too Rich off Idle
P2187	System Too Lean at Idle
P2188	System Too Rich at Idle
P2195	O_2 Sensor Signal Stuck Lean; Bank 1 Sensor 1
P2196	O_2 Sensor Signal Stuck Rich; Bank 1 Sensor 1
P2270	O_2 Sensor Signal Stuck Lean; Bank 1 Sensor 2
P2271	O_2 Sensor Signal Stuck Rich; Bank 1 Sensor 2
U0001	High Speed CAN Defective
U0101	Lost Communication with ECM
U0104	Lost Communication with Cruise Control Module
U0121	Lost Communication with Anti-Lock Brake System (ABS) Control Module
U0155	Lost Communication with Instrument Panel Cluster Control Module
U0415	Invalid Data Received from ABS Control Module

Downloaded from www.Manualslib.com manuals search engine

ECM Power Supply and Ground Circuit Test

Power Supply And Ground Circuit Diagnostic Check

EEC - 2.0L - PWR - 01

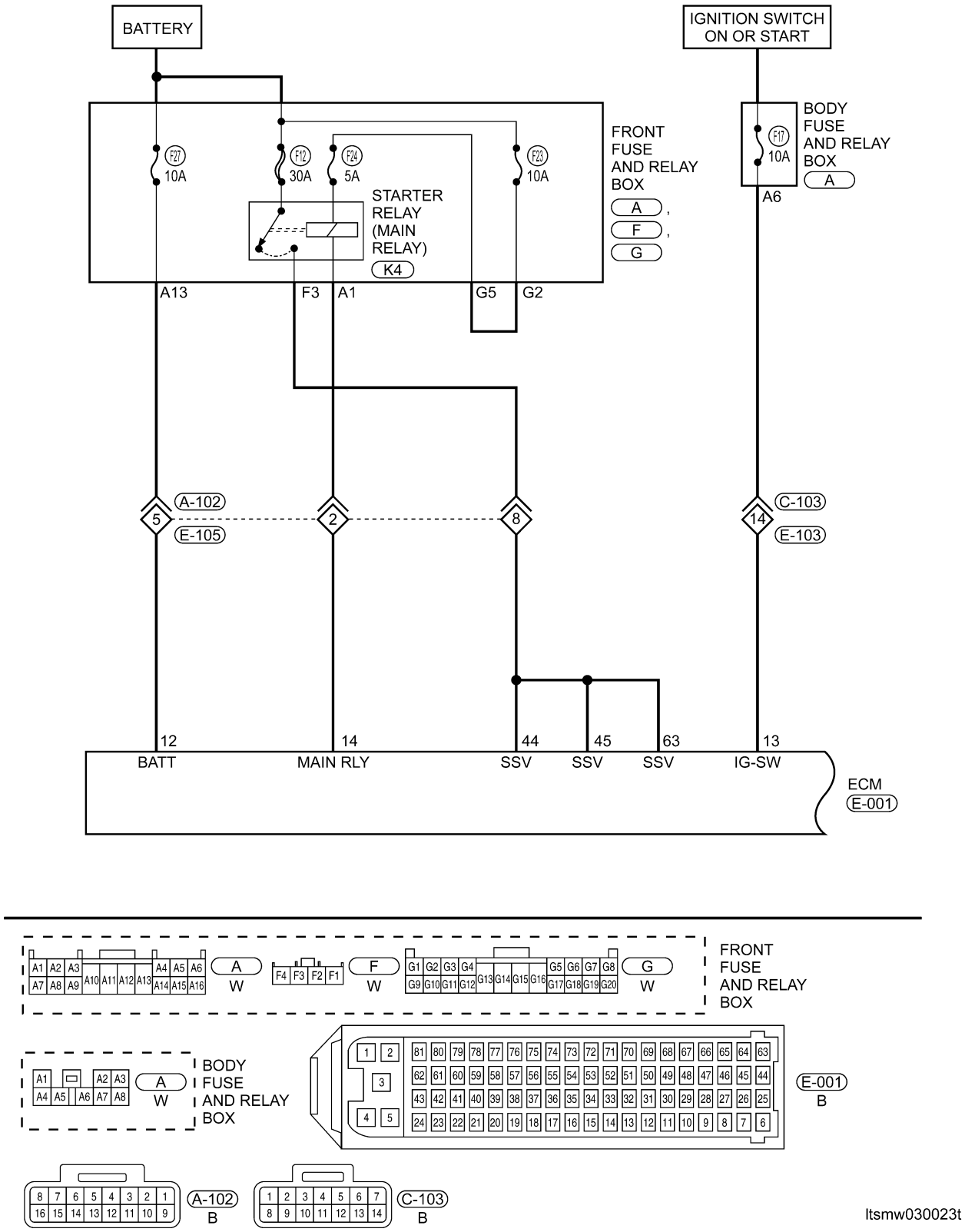

Downloaded from www.Manualslib.com manuals search engine

Check reference values between ECM terminals and ground under the following conditions:

ECM Power Supply Circuits

TERMINAL NO.	ITEM	CONDITION	DATA (DC VOLTAGE)
12	Battery	-	Battery Voltage (11 - 14 V)
13	Ignition switch	Ignition switch: ON	Battery Voltage (11 - 14 V)
		Ignition switch: OFF	Approximately 0 V
14	ECM main relay	• Ignition switch: OFF • More than a few seconds after turning ignition switch OFF	Battery Voltage (11 - 14 V)
44	Power supply for ECM	Ignition switch: ON	Battery Voltage (11 - 14 V)
45			
63			

Downloaded from www.Manualslib.com manuals search engine

EEC - 2.0L - PWR - 02

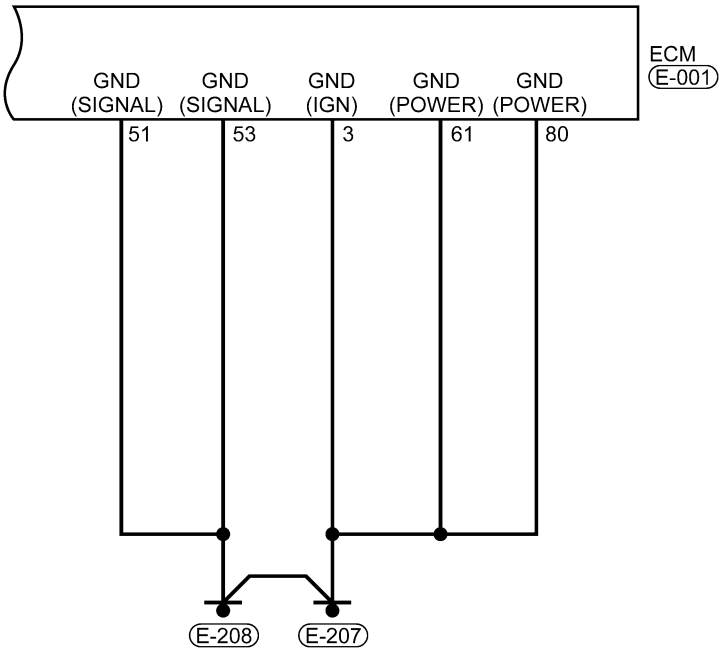

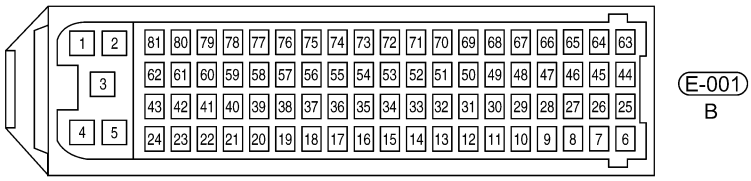

ltsmw030024t

Downloaded from www.Manualslib.com manuals search engine

Check reference values between ECM terminals and ground under the following conditions:

ECM TERMINAL NO.	ITEM	CONDITION	DATA (DC VOLTAGE)
3	ECM ground (IGN)	Ignition switch: ON	Approximately 0 V
51	ECM ground (Signal)	Ignition switch: ON	Approximately 0 V
53	ECM ground (Signal)	Ignition switch: ON	Approximately 0 V
61	ECM ground (Power)	Ignition switch: ON	Approximately 0 V
80	ECM ground (Power)	Ignition switch: ON	Approximately 0 V

Confirmation Procedure:

Before performing the following procedure, confirm that battery voltage is more than 12 V.
- Turn ignition switch off.
- Connect the X-431 scan tool to the Data Link Connector (DLC) - use the most current software available.
- Turn ignition switch on.
- Start engine then select view data stream.
- If the data stream is detected, the condition is intermittent (See Diagnosis & Testing Diagnostic Help in Section 03 Electronic Engine Controls).
- If data stream is not detected, go to Diagnostic Procedure - Step 1.

1. INSPECTION START

- Start engine.

Is engine running?

Yes >> Go to step 7.

No >> Go to step 2.

2. CHECK ECM POWER SUPPLY CIRCUIT - (1)

- Turn ignition switch off and then on.
- Check voltage between ECM terminal 13 and ground.
- Battery voltage should exist.

Is the check result normal?

Yes >> Go to step 4.

No >> Go to step 3.

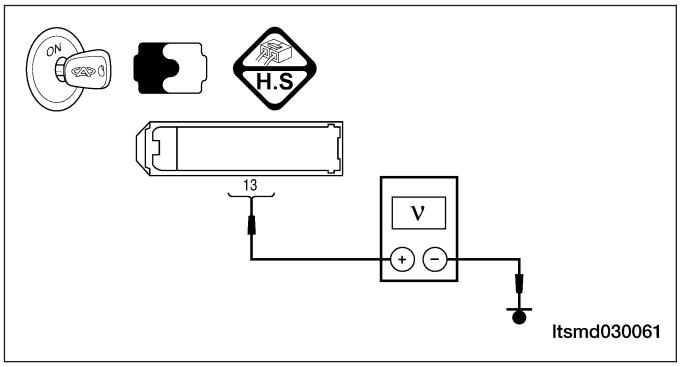

Downloaded from www.Manualslib.com manuals search engine

3. DETECT MALFUNCTIONING PART

- Check the following:
  - Harness connectors C-103, E-103, terminal 14
  - Front fuse and relay box connector A
  - Fuse 17
- Check harness for open or short between ECM and fuse.

Is the check result normal?

Yes >> Go to the next step.

No >> Repair or replace malfunctioning part.

4. CHECK GROUND CONNECTIONS

- Turn ignition switch off.
- Loosen and retighten one ground screw on the body.

Is the check result normal?

Yes >> Go to the next step.

No >> Repair or replace ground connections.

5. CHECK ECM GROUND CIRCUIT FOR AN OPEN OR SHORT

- Disconnect ECM harness connector.
- Check harness continuity between ECM terminals 3, 51, 53, 61, 80 and ground.
- Continuity should exist.
- Check harness for short to power.

Is the check result normal?

Yes >> Go to step 7.

No >> Go to the next step.

6. DETECT MALFUNCTIONING PART

- Check harness for open or short between ECM terminals 3, 51, 53, 61, 80 and ground.
- Check harness for an open or short to power in harness or connectors.

Is the check result normal?

Yes >> Go to the next step.

No >> Repair or replace the circuit for an open or short to power in harness or connectors.

Downloaded from www.Manualslib.com manuals search engine

7. CHECK ECM POWER SUPPLY CIRCUIT - (2)

- Turn ignition switch on and then off.
- Check voltage between ECM terminals 44, 45, 63 and ground.
- Voltage: Turn the ignition switch on and battery voltage should exist. Turning the ignition switch OFF, battery voltage will exist for a few seconds, then drop to approximately 0 V.

Is the check result normal?

Yes >> Check the starting system.

No >> Go to the next step.

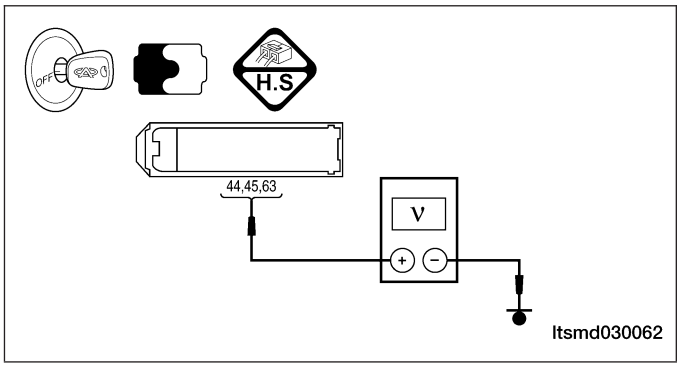

8. CHECK THE STARTER RELAY CONTROL CIRCUIT

- Turn ignition switch OFF. Wait for at least 10 seconds.
- Check voltage between ECM terminal 14 and ground.
- Battery voltage should exist.

Is the check result normal?

Yes >> Go to the next step.

No >> Go to step 10.

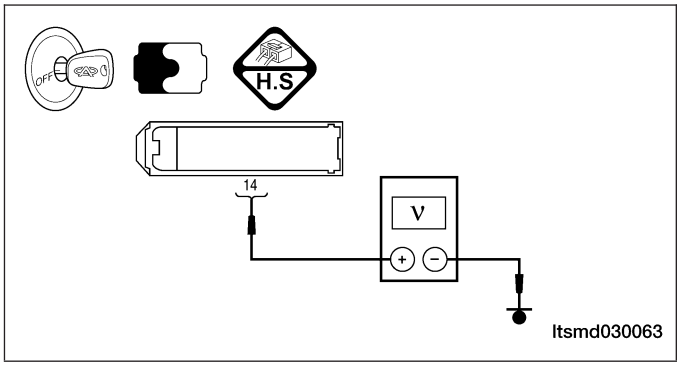

9. CHECK ECM POWER SUPPLY CIRCUIT - (3)

- Disconnect ECM harness connector.
- Disconnect front fuse and relay box harness connector F.
- Check harness continuity between ECM terminals 44, 45, 63 and front fuse and relay box terminal F3.
- Continuity should exist.
- Check harness for short to ground and short to power.

Is the check result normal?

Yes >> Go to step 12.

No >> Repair circuit for an open or short to power or short to ground in harness or connectors.

Downloaded from www.Manualslib.com manuals search engine

10. CHECK STARTER RELAY CONTROL CIRCUIT

- Disconnect ECM harness connector.
- Disconnect front fuse and relay box harness connector A.
- Check harness continuity between ECM terminal 14 and front fuse and relay box terminal A1.
- Check harness continuity between front fuse and relay box terminal G2 and G5.
- Continuity should exist.
- Also check harness for short to ground and short to power.

Is the check result normal?

Yes >> Go to the next step.

No >> Repair circuit for an open or short to ground or short to power in harness or connectors.

11. CHECK FUSE

- Disconnect fuse 23 (10A), fuse 24 (5A) in front fuse and relay box.
- Check fuses.

Is the check result normal?

Yes >> Go to the next step.

No >> Replace fuse 23 or 24.

12. CHECK FRONT FUSE AND RELAY BOX

- Check the front fuse and relay box for damage.

Is the check result normal?

Yes >> Go to the next step.

No >> Replace front fuse and relay box.

13. REPLACE AND PROGRAM ECM

- Replace the ECM.

NOTE :
The Immobilizer control module must be matched to the new ECM (See ECM Removal & Installation in Section 03 Electronic Engine Controls).

Downloaded from www.Manualslib.com manuals search engine

Diagnostic Trouble Code (DTC) Tests

P0016 - Camshaft Position-Crankshaft Position Correlation Error

EEC - 2.0L - PHASE - 01

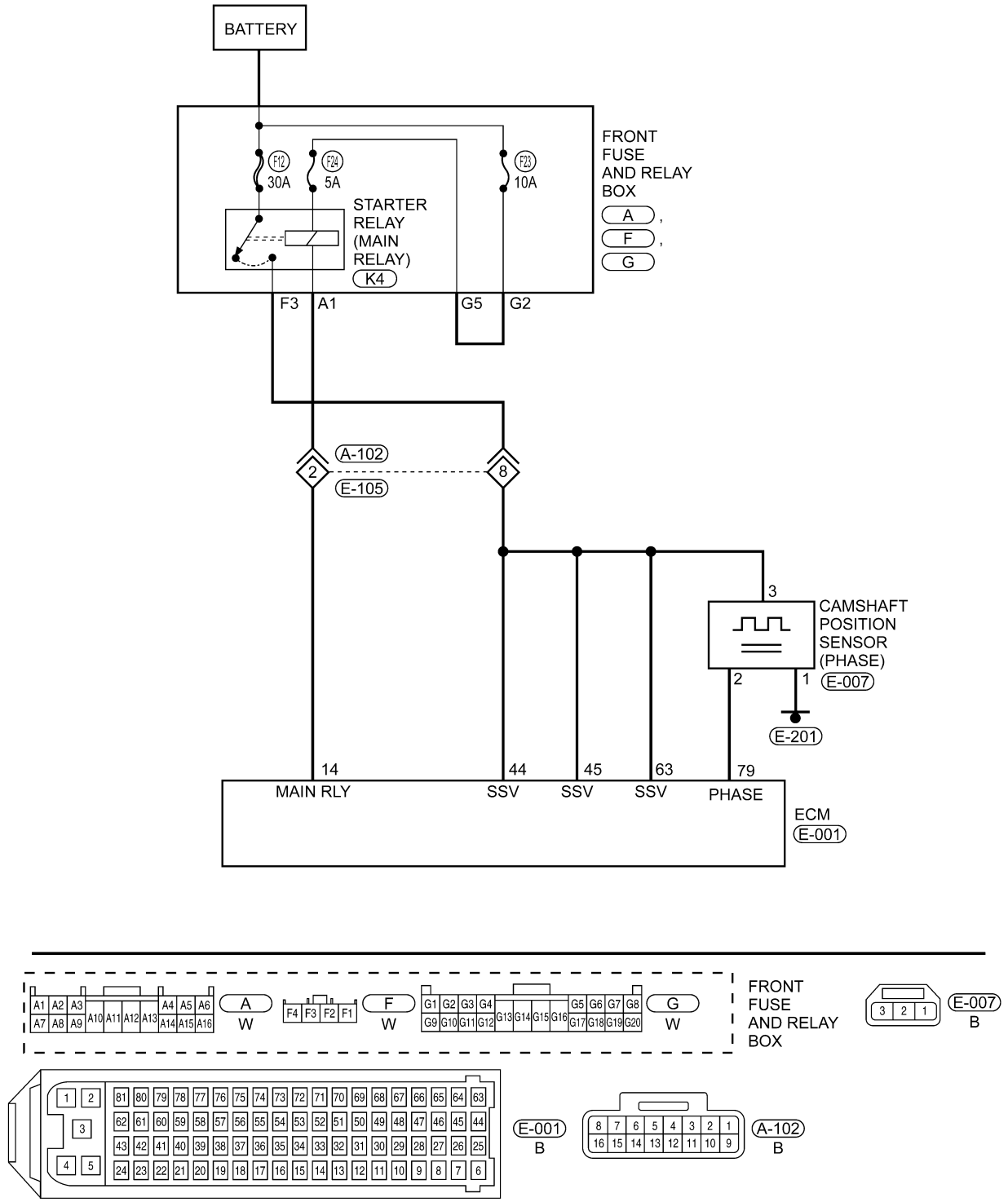

ltsmw030032t

Downloaded from www.Manualslib.com manuals search engine

EEC - 2.0L - POS - 01

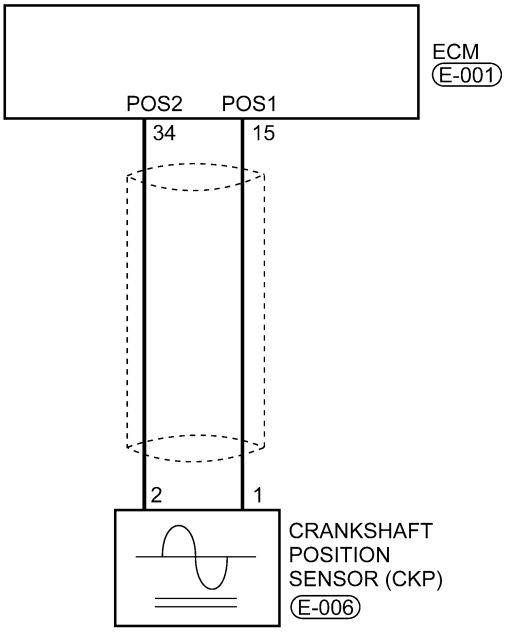

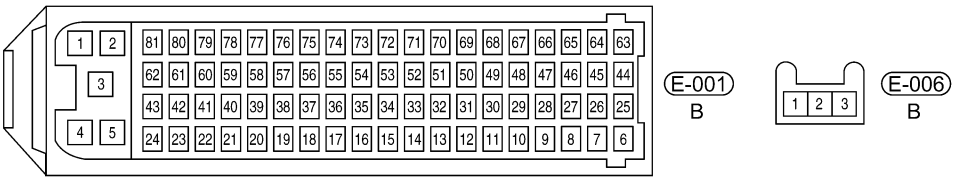

ltsmw030027t

Downloaded from www.Manualslib.com manuals search engine

Check reference values between ECM terminals and ground under the following conditions:

ECM TERMINAL NO.	ITEM	CONDITION	DATA (AVERAGE DC VOLTAGE)
15	Crankshaft Position (CKP) sensor	• Ignition switch: ON • Engine: Not cranking	3 V
34			
79	Camshaft Position (CMP) sensor	• Ignition switch: ON • Engine: Not cranking	11 V

On Board Diagnostic Logic

- Self-diagnosis detection logic.

DTC NO.	DTC DEFINITION	DTC DETECTION CONDITION	DTC SET CONDITION	POSSIBLE CAUSE
P0016	Camshaft position-Crankshaft position correlation error	Engine is running	ECM detects that the CMP sensor is out of phase with CKP sensor.	• Crankshaft Position (CKP) sensor • Camshaft Position (CMP) sensor • Harness or connectors • Crankshaft signal plate • Camshaft signal plate • Timing misalignment • ECM

DTC Confirmation Procedure:

Before performing the following procedure, confirm that battery voltage is more than 12 V.

- Connect the X-431 scan tool to the diagnostic connector (DLC) - use the most current software available, press the POWER key to start the X-431.
- Turn ignition switch on and record and erase DTC.
- Start engine and warm it up to the normal operating temperature.
- With the scan tool, select view DTC and data stream.
- If the DTC is detected, the DTC condition is current. Go to Diagnostic Procedure - Step 1.
- If the DTC is not detected, the DTC condition is intermittent (See Diagnostic Help and Intermittent DTC Troubleshooting in Section 03 Electronic Engine Controls for more information.

NOTE :
While performing electrical diagnosis & testing, always refer to the electrical schematics for specific circuit and component information.

Downloaded from www.Manualslib.com manuals search engine

Diagnostic Procedure

1. CHECK GROUND CONNECTIONS

- Turn ignition switch off.
- Loosen and retighten ground screws on the body (See Ground Inspection in Section 03 Electronic Engine Controls).
- Inspect ground connections E-207 and E-208 mounting position (See Vehicle Wiring Harness Layout - Engine Room Harness (With 2.0L Engine) in Section 16 Wiring).

Are the ground connections OK?

Yes >> Go to the next step.

No >> Repair or replace ground harness or connections.

2. CHECK CMP SENSOR ELECTRICAL CONNECTOR

- Disconnect the CMP sensor electrical connector (1).
- Inspect the electrical connector for damage.

Is the electrical connector OK?

Yes >> Go to the next step.

No >> Repair or replace the electrical connector as necessary.

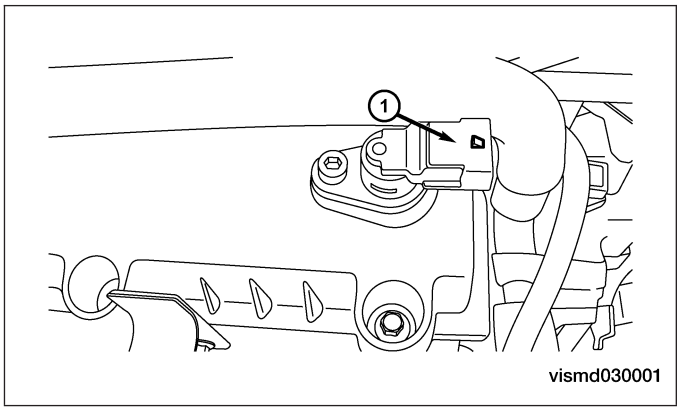

3. CHECK CMP SENSOR POWER SUPPLY CIRCUIT FOR AN OPEN OR SHORT

- Turn ignition switch on.
- Check CMP sensor supply voltage between sensor connector E-007, terminal 3 and ground in the sensor electrical connector.
- Battery voltage should exist.

Is the check result normal?

Yes >> Go to step 5.

No >> Go to the next step.

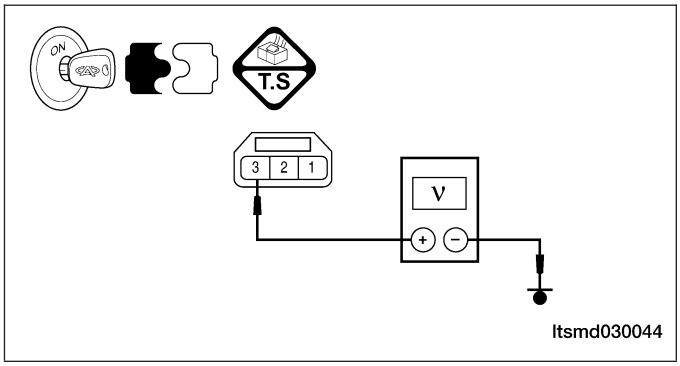

Downloaded from www.Manualslib.com manuals search engine

4. DETECT MALFUNCTIONING PART

- Check the following:
  - Harness connectors A-102, E-105
  - Front fuse and relay box F3
  - Fuse 22, Fuse 12
  - Check harness for open or short between CMP sensor and fuse.
- With the X-431 scan tool, read ECM DTCs.

Is DTC P0016 still present?

Yes >> Go to the next step.

No >> The system is now operating properly.
Reassemble the vehicle and road test to verify the customers complaint is repaired.

5. CHECK CMP SENSOR GROUND CIRCUIT FOR AN OPEN AND SHORT

- Turn ignition switch off.
- Check harness continuity between CMP sensor terminal 1 and ground.
- Continuity should exist.

Is the check result normal?

Yes >> Go to the next step.

No >> Repair or replace circuit for an open or short to power in harness or connectors.

6. CHECK CMP SENSOR INPUT SIGNAL CIRCUIT FOR AN OPEN AND SHORT

- Turn ignition switch on.
- Check voltage between CMP sensor terminal 2 and ground.
- 11 V should exist.

Is the check result normal?

Yes >> Go to the next step.

No >> Repair or replace circuit for an open or short to power or short to ground in harness or connectors.
If circuit is normal, go to the next step.

Downloaded from www.Manualslib.com manuals search engine

7. CHECK CMP SENSOR SIGNAL

- Turn ignition switch off.
- Connect CMP sensor connector.
- Check signal voltage between CMP sensor terminal 2 and ground when engine is running.
- Approximately 6 V square wave signal should exist.

	CMP SENSOR SIGNAL
ENGINE ANALYZER (KES-200)	vismd030003

Is the CMP output signal normal?

Yes >> Go to step 10.

No >> Go to the next step.

8. CHECK CMP SENSOR

- Remove the CMP sensor (1).
- Inspect and clean the CMP sensor and mounting area for any condition that would result in an incorrect signal, such as damage, foreign material, or excessive movement.

Is the mounting area OK?

Yes >> Go to the next step.

No >> Repair or replace the sensor as necessary.

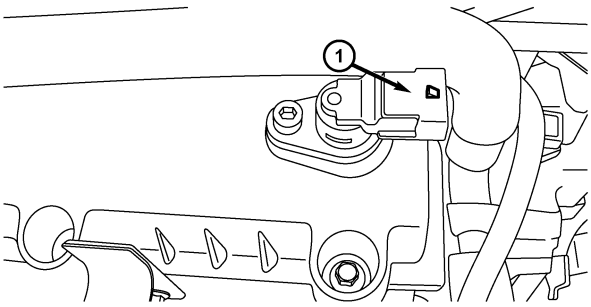

vismd030001

Downloaded from www.Manualslib.com manuals search engine

9. CHECK CMP SENSOR RESISTANCE

- Check the resistance of the CMP sensor, component side.

TERMINAL NO.	RESISTANCE Ω (25°C)
1 & 2	Except 0 or ∞
1 & 3	
2 & 3	

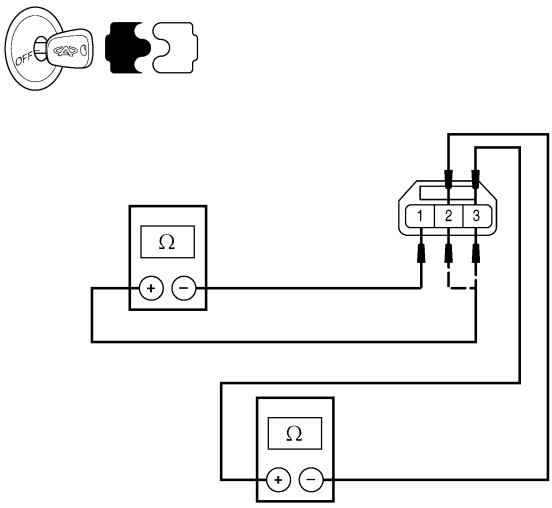

ltsmd030045

Is the check result normal?

Yes >> Replace the CMP sensor with a known good CMP sensor.
Monitor the CMP sensor signal on the KES-200 screen.
– If the CMP sensor signals were normal, the system is OK.
– If the CMP sensor signals were still irregular or missing, go to step 14.

No >> Eliminate any condition that would result in an incorrect signal.

Downloaded from www.Manualslib.com manuals search engine

10. CHECK CKP SENSOR SIGNAL

- Check signal between CKP sensor (1) terminal 1 or 2 and ground when engine is running.

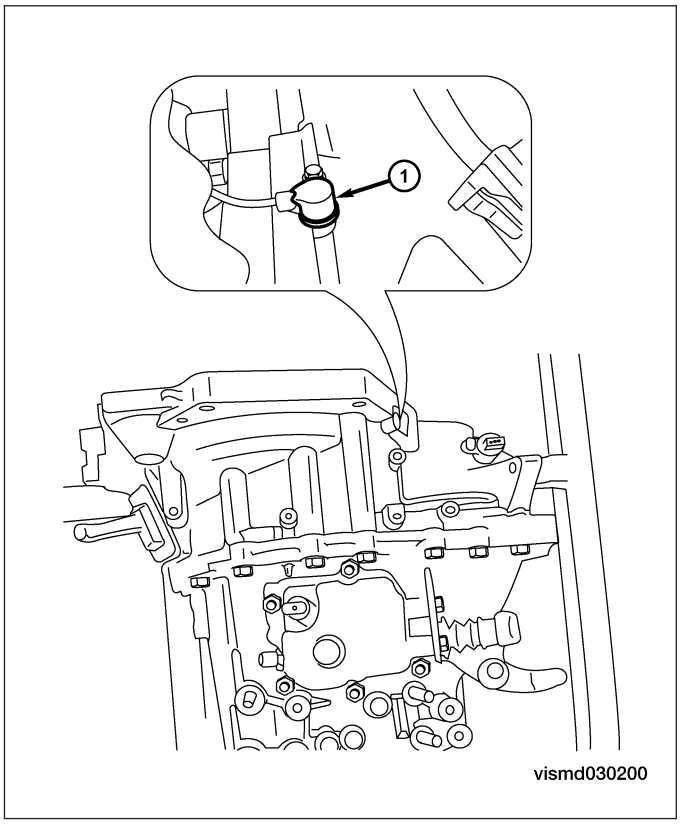

	CKP SENSOR SIGNAL
ENGINE ANALYZER (KES-200)	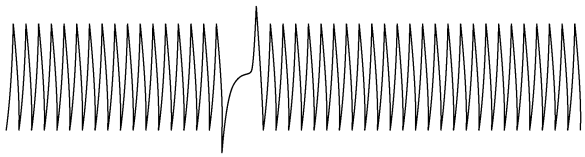 vismd030002

Is the CKP output signal normal?

Yes >> Go to step 12.

No >> Go to the next step.

Downloaded from www.Manualslib.com manuals search engine

11. CHECK CKP SENSOR ELECTRICAL CONNECTOR

- Disconnect the CKP sensor (1) electrical connector.
- Inspect the electrical connector for damage.

Is the electrical connector OK?

Yes >> Go to the next step.

No >> Repair or replace the electrical connector as necessary.

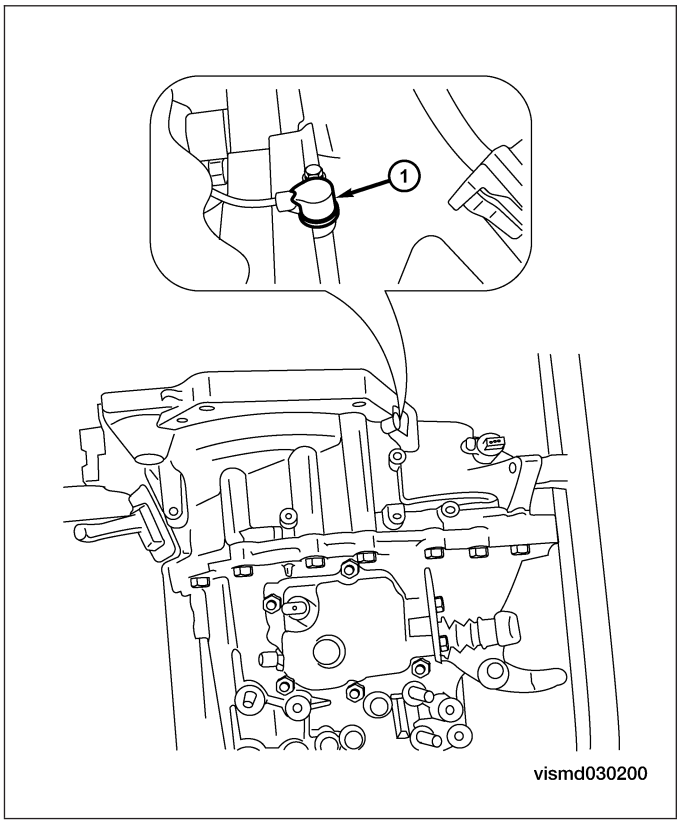

12. CHECK CKP SENSOR

- Remove the CKP sensor.
- Inspect and clean the CKP sensor and mounting area for any condition that would result in an incorrect signal, such as damage, foreign material, or excessive movement.

Is the mounting area OK?

Yes >> Go to the next step.

No >> Repair or replace the sensor as necessary.

Downloaded from www.Manualslib.com manuals search engine

13. CHECK CKP SENSOR RESISTANCE

- Check the resistance of the CKP sensor, component side.

TERMINAL NO.	RESISTANCE Ω (25°C)
1 & 2	Approximately 860 Ω

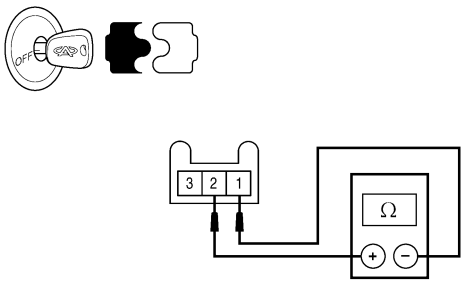

ltsmd030049

Is the check result normal?

Yes >> Replace the CKP sensor with a known good CKP sensor.
Monitor the CKP sensor signal on the KES-200 screen.
– If the CKP sensor signals were normal, the system is OK.
– If the CKP sensor signals were still irregular or missing, go to step 15.

No >> Replace the CKP sensor.

14. CHECK CAMSHAFT AND CAMSHAFT SIGNAL PLATE

- Remove the cylinder head cover and timing belt cover (See timing belt removal and installation in Section 02 engine).
- Check the installed clearance (See CMP sensor Removal & Installation in Section 03 Electronic Engine Controls).
- 0.8 - 1.2 mm should exist.
- Check the camshaft and camshaft signal plate for any condition that would result in an incorrect signal, such as damage, become flexible, foreign material when rotate the camshaft.

Were any problems found?

Yes >> Remove debris and clean the signal plate of camshaft rear end or replace camshaft.
Reinstall CMP sensor.

No >> Go to step 17.

15. CHECK THE CRANKSHAFT AND CRANKSHAFT SIGNAL PLATE

- Check the installed clearance (See CKP sensor Removal & Installation in Section 08 Transaxle & Transfer Case).
- 0.8 - 1.2 mm should exist.
- Check the crankshaft and camshaft signal plate for any condition that would result in an incorrect signal, such as damage, become flexible, foreign material when rotate the camshaft.

Were any problems found?

Yes >> Remove debris and clean the signal plate of crankshaft rear end or replace crankshaft.
Reinstall the CKP sensor.

No >> Go to the next step.

Downloaded from www.Manualslib.com manuals search engine

16. CHECK TIMING

- Check for timing misalignment.

Is the timing misaligned?

Yes >> Align the engine timing belt (See Timing Belt Removal & Installation in Section 02 Engine).

No >> Go to the next step.

17. CHECK DTC

- With the X-431 scan tool, read ECM DTCs.
- Refer to ″DTC Confirmation Procedure″.

Is DTC P0016 still present?

Yes >> Replace the ECM.

NOTE : The Immobilizer control module must be matched to the new ECM (See ECM Removal & Installation in Section 03 Electronic Engine Controls).

No >> The system is now operating properly.
Reassemble the vehicle and road test to verify the customers complaint is repaired.

Downloaded from www.Manualslib.com manuals search engine

P0031 - O_2 Sensor 1 Heater Control Circuit Low

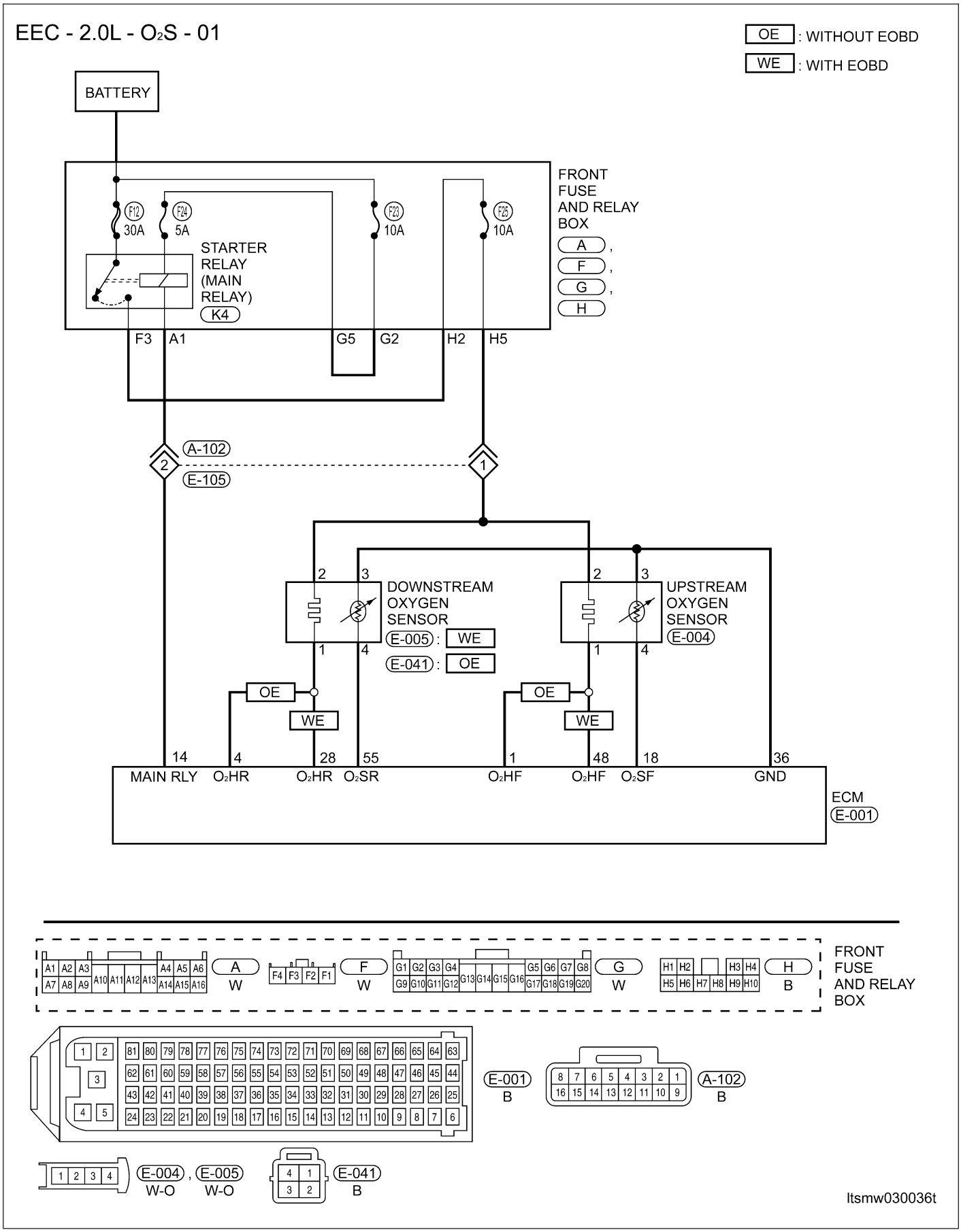

Downloaded from www.Manualslib.com manuals search engine

Check reference values between ECM terminals and ground under the following conditions:

ECM TERMINAL NO.	ITEM	CONDITION	DATA (DC VOLTAGE)
18	Upstream oxygen sensor	• Engine is running • Warm-up condition • Keep the engine speed 2000 RPM	Approximately 0.1 - 0.9 V (change 5 - 8 times in 10 seconds periodically)
28	Downstream oxygen sensor heating	-	-
36	Sensor (GND)	• Warm-up condition • Idle speed	Approximately 0 V
48	Upstream oxygen sensor heating	-	-
55	Downstream oxygen sensor	• Engine is running • Warm-up condition • Keep the engine speed 2000 RPM	Approximately 100 mV

On Board Diagnostic Logic

- Self-diagnosis detection logic.

DTC NO.	DTC DEFINITION	DTC DETECTION CONDITION	POSSIBLE CAUSE
P0031	O_2 sensor 1 heater control circuit low	Engine is running	• Fuel quality • Upstream O_2 sensor • Harness or connectors • ECM

DTC Confirmation Procedure:

Before performing the following procedure, confirm that battery voltage is more than 12 V.

- Turn ignition switch off.
- Connect the X-431 scan tool to the Data Link Connector (DLC) - use the most current software available.
- Turn ignition switch on and record and erase DTC.
- Start engine and warm it up to the normal operating temperature.
- Turn ignition switch off and wait at least 10 seconds.
- Start engine and keep the engine speed 2000 RPM for at least 1 minute.
- Let engine idle for 2 minutes, select view DTC and data stream.
- If the DTC is detected, the DTC condition is current. Go to Diagnostic Procedure - Step 1.
- If the DTC is not detected, the DTC condition is intermittent (See Diagnostic Help and Intermittent DTC Troubleshooting in Section 03 Electronic Engine Controls for more information.

NOTE :
While performing electrical diagnosis & testing, always refer to the electrical schematics for specific circuit and component information.

Downloaded from www.Manualslib.com manuals search engine

Diagnostic Procedure

1. CHECK GROUND CONNECTIONS

- Turn ignition switch off.
- Loosen and retighten ground screws on the body (See Ground Inspection in Section 03 Electronic Engine Controls).
- Inspect ground connections E-20 7 and E-208 mounting position (See Vehicle Wiring Harness Layout - Engine Room Harness (With 2.0L Engine) in Section 16 Wiring).

Are the ground connections OK?

Yes >> Go to the next step.

No >> Repair or replace ground harness or connections.

2. CHECK UPSTREAM O_2 SENSOR ELECTRICAL CONNECTOR

- Disconnect the upstream O_2 sensor (1) electrical connector.
- Inspect the electrical connector for damage.

Is the electrical connector OK?

Yes >> Go to the next step.

No >> Repair or replace the electrical connector as necessary.

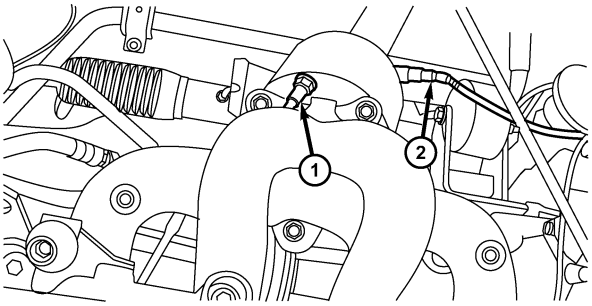

besm030017

3. CHECK UPSTREAM O_2 SENSOR POWER SUPPLY CIRCUIT

- Turn ignition switch on.
- Check supply voltage between O_2 sensor terminal 2 and ground in the O_2 sensor electrical connector E-005.
- Battery voltage should exist.

Is the check result normal?

Yes >> Go to Step 5.

No >> Go to the next step.

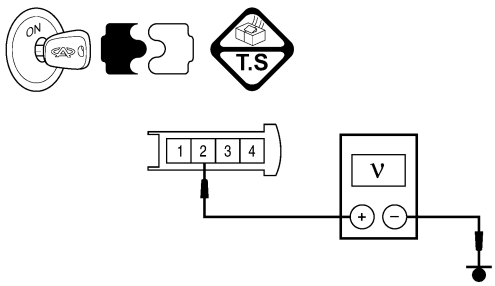

ltsmd030029

Downloaded from www.Manualslib.com manuals search engine

4. DETECT MALFUNCTIONING PART

- Check the following:
  - Harness connectors A-102, E-105
  - Front fuse and relay box H2, H5
  - Fuse 25, fuse 12, fuse 23, fuse 24
- Check harness for an open or short between O_2 sensor and fuse.
- Repair or replace malfunctioning part.
- With the X-431, select view DTC.

Is DTC P0031 still present?

Yes >> Go to the next step.

No >> The system is normal now.

5. CHECK O_2 SENSOR HEATER CONTROL CIRCUIT FOR OPEN OR SHORT

- Turn ignition switch off.
- Disconnect ECM connector.
- Check harness continuity between ECM terminal and O_2 sensor terminal.

COMPONENT	ECM	UPSTREAM O_2 SENSOR
TERMINAL	• 48 (With EOBD) • 1 (Without EOBD)	1

- Continuity should exist.
- Check harness for short to ground.

Is the check result normal?

Yes >> Go to the next step.

No >> Repair the circuit for an open or short in harness or connectors.

6. CHECK O_2 SENSOR HEATER

- Check resistance between O_2 sensor heater terminals.

TERMINAL NO.	RESISTANCE	
1 and 2 (including cable and connector)	Approximately 9 Ω	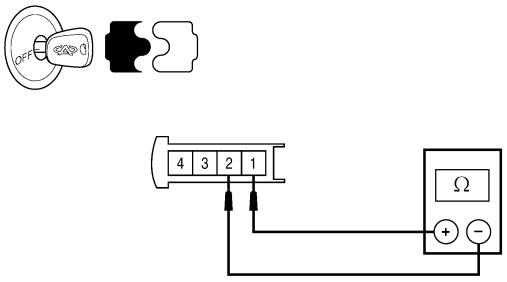 ltsmd030030

Downloaded from www.Manualslib.com manuals search engine

- Check resistance between O_2 sensor terminals.

TERMINAL NO.	RESISTANCE	
1 & 3 and 1 & 4	∞ Ω (Continuity should not exist)	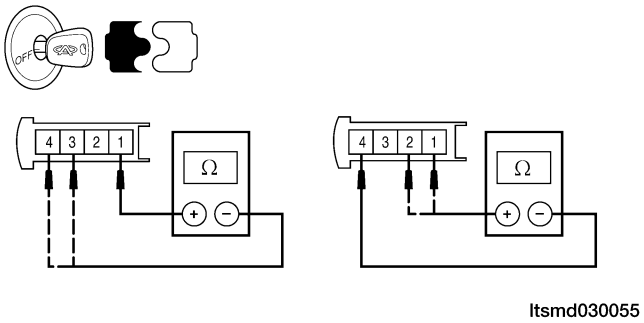
4 & 1 and 4 & 2		

Is the check result normal?

Yes >> Go to the next step.

No >> Replace O_2 sensor.

7. CHECK DTC

- With the X-431 scan tool, read ECM DTCs.
- Refer to ″DTC Confirmation Procedure″.

Is DTC P0031 still present?

Yes >> Replace the ECM.

NOTE : The Immobilizer control module must be matched to the new ECM (See ECM Removal & Installation in Section 03 Electronic Engine Controls).

No >> The system is now operating properly.
Reassemble the vehicle and road test to verify the customers complaint is repaired.

Downloaded from www.Manualslib.com manuals search engine

P0032 - O_2 Sensor 1 Heater Control Circuit High

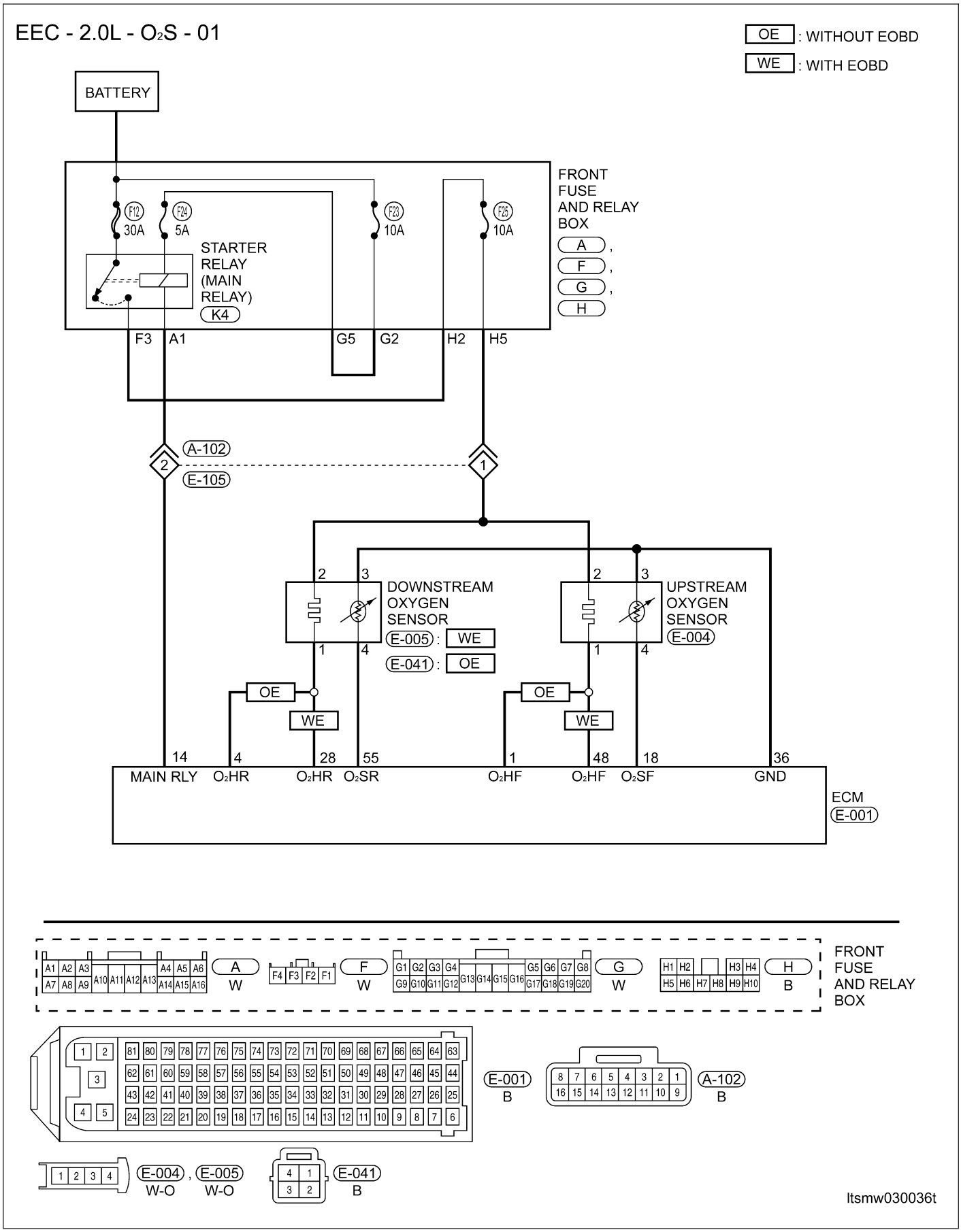

Downloaded from www.Manualslib.com manuals search engine

Specification data are reference values and are measured between each terminal and ground.

ECM TERMINAL NO.	ITEM	CONDITION	DATA (DC VOLTAGE)
18	Upstream oxygen sensor	• Engine is running • Warm-up condition	Approximately 0.1 - 0.9 V (change 5 - 8 times in 10 seconds periodically)
28	Downstream oxygen sensor heating (with EOBD)	-	-
36	Sensor (GND)	• Warm-up condition • Idle speed	Approximately 0 V
48	Upstream oxygen sensor heating (without EOBD)	-	-
55	Downstream oxygen sensor	• Engine is running • Warm-up condition	Approximately 100 mV

On Board Diagnostic Logic

- Self-diagnosis detection logic.

DTC NO.	DTC DEFINITION	DTC DETECTION CONDITION	POSSIBLE CAUSE
P0032	O_2 sensor 1 heater control circuit high	Engine is running	• Upstream Oxygen Sensor • Harness or connectors • ECM

DTC Confirmation Procedure:

Before performing the following procedure, confirm that battery voltage is more than 12 V.

- Turn ignition switch off.
- Connect the X-431 scan tool to the Data Link Connector (DLC) - use the most current software available.
- Turn ignition switch on and record and erase DTC.
- Start engine and warm it up to the normal operating temperature.
- Turn ignition switch off and wait at least 10 seconds.
- Start engine and keep the engine speed 2000 RPM for at least 1 minute.
- Let engine idle for 2 minutes, select view DTC and data stream.
- If the DTC is detected, the DTC condition is current. Go to Diagnostic Procedure - Step 1.
- If the DTC is not detected, the DTC condition is intermittent (See Diagnostic Help and Intermittent DTC Troubleshooting in Section 03 Electronic Engine Controls for more information.

NOTE :
While performing electrical diagnosis & testing, always refer to the electrical schematics for specific circuit and component information.

Downloaded from www.Manualslib.com manuals search engine

Diagnostic Procedure

1. CHECK GROUND CONNECTIONS

- Turn ignition switch off.
- Loosen and retighten ground screws on the body (See Ground Inspection in Section 03 Electronic Engine Controls).
- Inspect ground connections E-207 and E-208 mounting position (See Vehicle Wiring Harness Layout - Engine Room Harness (With 2.0L Engine) in Section 16 Wiring).

Are the ground connections OK?

Yes >> Go to the next step.

No >> Repair or replace ground connections.

2. CHECK UPSTREAM O_2 SENSOR ELECTRICAL CONNECTOR

- Disconnect the upstream O_2 sensor (1) electrical connector E-004.
- Inspect the electrical connector for damage.

Is the electrical connector OK?

Yes >> Go to the next step.

No >> Repair or replace the electrical connector as necessary.

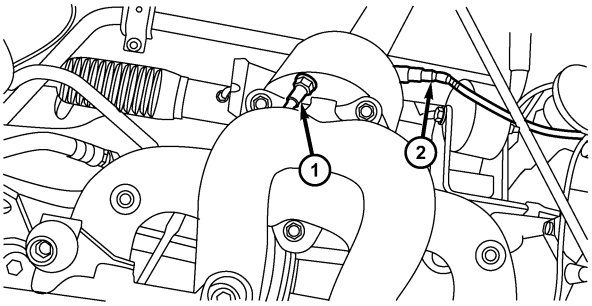

besm030017

3. CHECK UPSTREAM O_2 SENSOR POWER SUPPLY CIRCUIT

- Turn ignition switch on.
- Check supply voltage between upstream O_2 sensor terminal 2 and ground in the O_2 sensor electrical connector E-004.
- Battery voltage should exist.

Is the check result normal?

Yes >> Go to Step 5.

No >> Go to the next step.

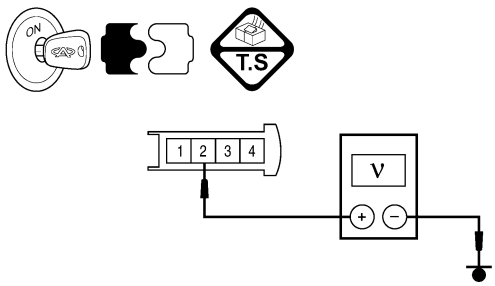

ltsmd030029

Downloaded from www.Manualslib.com manuals search engine

4. DETECT MALFUNCTIONING PART

- Check the following:
  - Harness connectors A-102, E-105
  - Front fuse and relay box H2, H5
  - Fuse 25, Fuse 12, Fuse 23, Fuse 24
- Check harness for open or short between O_2 sensor and fuse.
- Repair or replace malfunctioning part.
- With the X-431, select view DTC.

Is DTC P0032 still present?

Yes >> Go to the next step.

No >> The system is now operating properly.
Reassemble the vehicle and road test to verify the customers complaint is repaired.

5. CHECK O_2 SENSOR HEATER CONTROL CIRCUIT FOR A SHORT

- Turn ignition switch off.
- Disconnect ECM connector.
- Check harness continuity between ECM terminal and O_2 sensor terminal.

COMPONENT	ECM	UPSTREAM O_2 SENSOR
TERMINAL	• 48 (With EOBD) • 1 (Without EOBD)	1

- Continuity should exist.
- Check harness short to power supply circuit.

Is the check result normal?

Yes >> Go to the next step.

No >> Repair circuit for a short to power in harness or connectors.

6. CHECK THE O_2 SENSOR HEATER

- Check resistance between O_2 sensor heater terminals.

TERMINAL NO.	RESISTANCE	
1 & 2 (including cable and connector)	Approximately 9 Ω	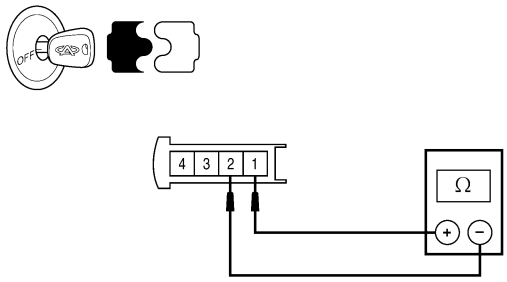 ltsmd030030

Downloaded from www.Manualslib.com manuals search engine

- Check resistance between O_2 sensor terminals.

TERMINAL NO.	RESISTANCE	
1 & 3 and 1 & 4	∞ Ω (Continuity should not exist)	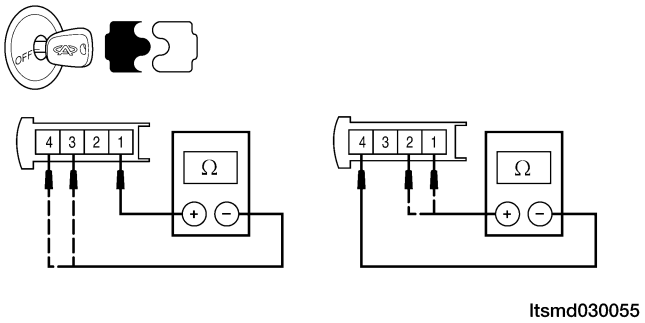
4 & 1 and 4 & 2		

Is the check result normal?

Yes >> Go to the next step.

No >> Replace O_2 sensor.

7. CHECK DTC

- With the X-431 scan tool, read ECM DTCs.
- Refer to ″DTC Confirmation Procedure″.

Is DTC P0032 still present?

Yes >> Replace the ECM.

NOTE : The Immobilizer control module must be matched to the new ECM (See ECM Removal & Installation in Section 03 Electronic Engine Controls).

No >> The system is now operating properly.
Reassemble the vehicle and road test to verify the customers complaint is repaired.

Downloaded from www.Manualslib.com manuals search engine

P0102 - Mass Or Volume Air Flow Circuit Low Input

EEC - 2.0L - MAF - 01

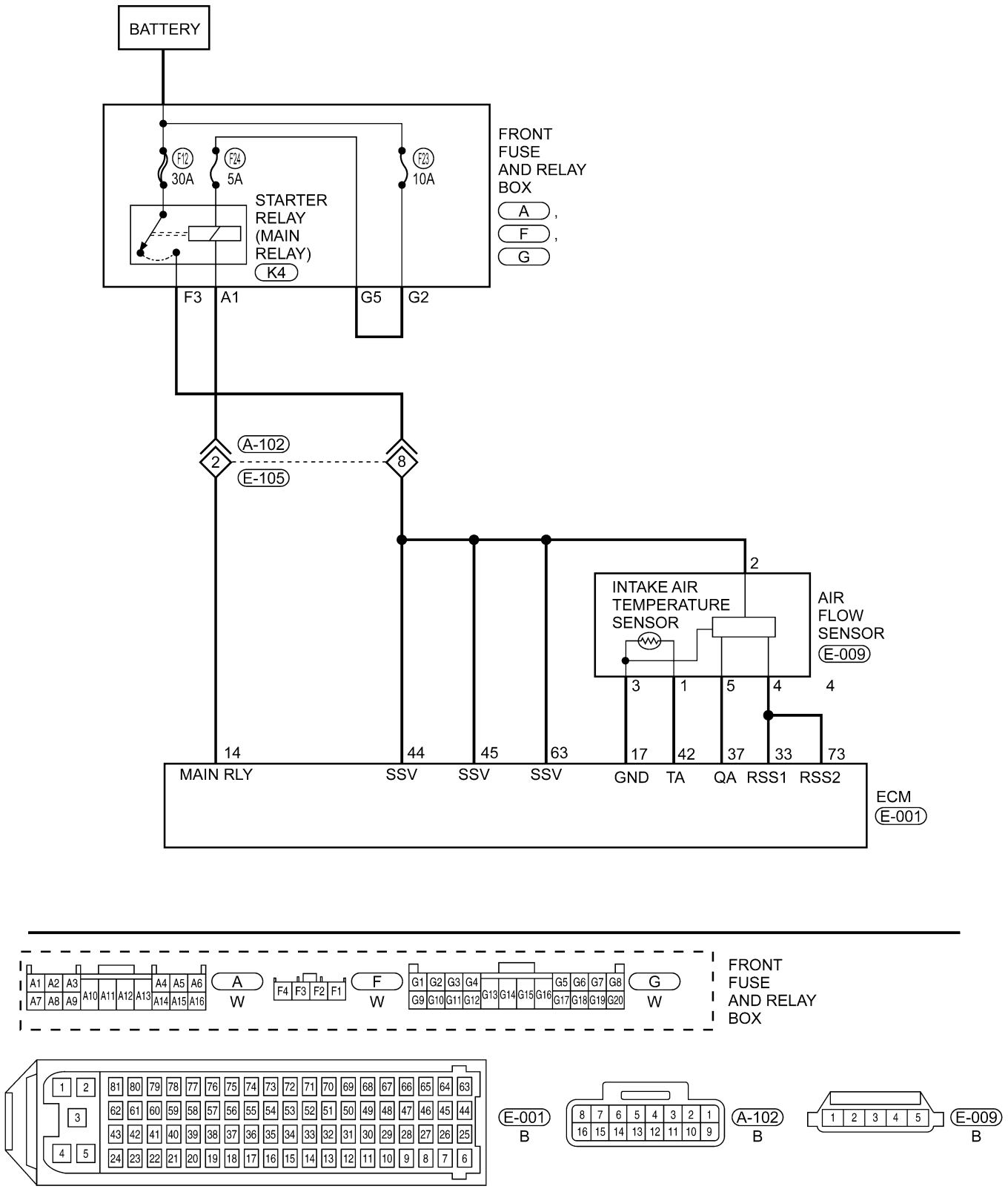

Downloaded from www.Manualslib.com manuals search engine

Check reference values between ECM terminals and ground under the following conditions:

ECM TERMINAL NO.	ITEM	CONDITION	DATA (DC VOLTAGE)
17	Sensor (GND)	• Engine is running • Warm-up condition: 78°C • Idle: 795 RPM • IAT: 36°C • IAT signal: 1.88 V	Approximately 0 V
33	Regulated sensor supply		5 V
37	Air flow sensor		Approximately 322 kg/h
			Approximately 1.39 V

On Board Diagnostic Logic

- Self-diagnosis detection logic.

DTC NO.	DTC DEFINITION	DTC DETECTION CONDITION	DTC SET CONDITION	POSSIBLE CAUSE
P0102	Mass or Volume Air Flow (MAF) circuit low input	Ignition switch on or engine is running	ECM detected that the input signal is out of the acceptable range.	• MAF sensor • Intake air leaks • Harness or connectors • ECM

DTC Confirmation Procedure:

Before performing the following procedure, confirm that battery voltage is more than 12 V.
- Turn ignition switch off.
- Connect the X-431 scan tool to the Data Link Connector (DLC) - use the most current software available.
- Turn ignition switch on.
- With the scan tool, record and erase stored DTCs in the ECM.
- Start engine and warm it to normal operating temperature, then select view DTC and data stream.
- If the DTC is detected, the DTC condition is current. Go to Diagnostic Procedure - Step 1.
- If the DTC is not detected, the DTC condition is intermittent (See Diagnostic Help and Intermittent DTC Troubleshooting in Section 03 Electronic Engine Controls for more information.

NOTE :
While performing electrical diagnosis & testing, always refer to the electrical schematics for specific circuit and component information.

Diagnostic Procedure

1. CHECK GROUND CONNECTIONS

- Turn ignition switch off.
- Loosen and retighten ground screws on the body (See Ground Inspection in Section 03 Electronic Engine Controls).
- Inspect ground connections E-207 and E-208 mounting position (See Vehicle Wiring Harness Layout - Engine Room Harness (With 2.0L Engine) in Section 16 Wiring).

Are the ground connections OK?

Yes >> Go to the next step.

No >> Repair or replace ground harness or connections.

Downloaded from www.Manualslib.com manuals search engine

2. CHECK INTAKE SYSTEM

- Check the following for proper connection.
  - Air duct
  - Vacuum hoses
  - Intake air passage between air duct and manifold

Is the check result normal?

Yes >> Go to the next step.

No >> Reconnect the connectors or replace the malfunctioning part.

3. CHECK MAF SENSOR ELECTRICAL CONNECTOR

- Disconnect the MAF sensor electrical connector (1).
- Inspect the electrical connector for damage.

Is the electrical connector OK?

Yes >> Go to the next step.

No >> Repair or replace the electrical connector as necessary.

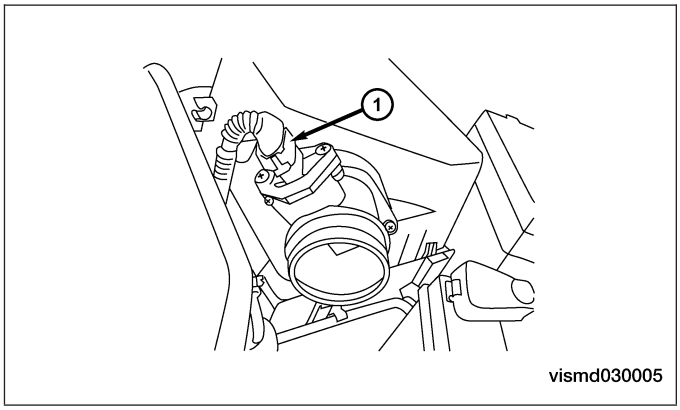

4. CHECK THE MAF SENSOR POWER SUPPLY CIRCUIT

- Turn ignition switch on.
- Check voltage between MAF sensor terminal 2 and ground in the MAF sensor electrical connector E-009.
- Battery voltage should exist.

Is the check result normal?

Yes >> Go to step 6.

No >> Go to the next step.

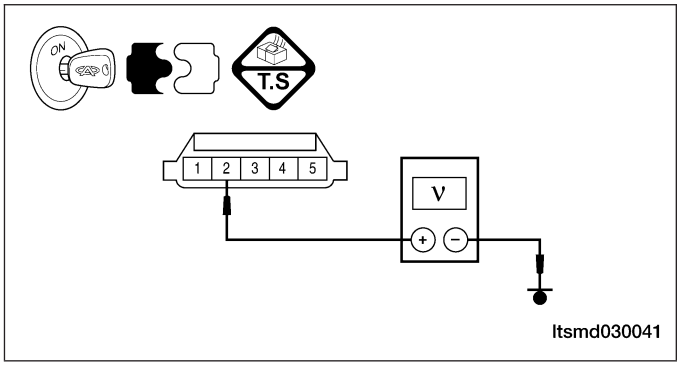

Downloaded from www.Manualslib.com manuals search engine

5. DETECT MALFUNCTIONING PART

- Check the following parts:
  - Relay
  - Fuse 23, fuse 24, fuse 12
  - Harness connectors A-102, E-105
- Check harness for an open or short between MAF sensor and fuse.
- Repair an open circuit or short to ground in harness or connectors.
- With the X-431, view DTC in ECM.

Is DTC P0102 present?

Yes >> Go to the next step.

No >> The system is now operating properly.
Reassemble the vehicle and road test to verify the customers complaint is repaired.

6. CHECK MAF SENSOR REFERENCE VOLTAGE

- Check voltage between MAF sensor terminal 4 and ground in the MAF sensor electrical connector E-009.
- 5 V should exist.

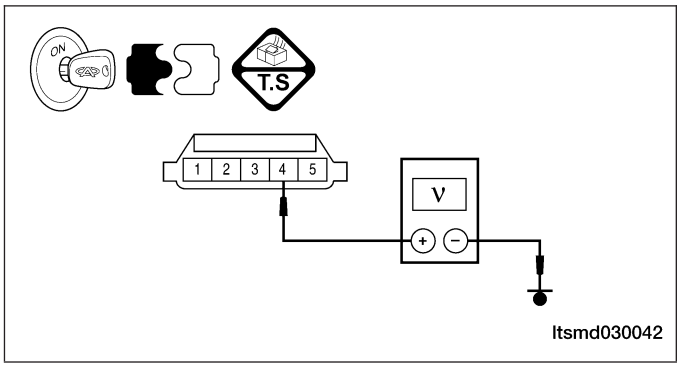

Is the check result normal?

Yes >> Go to the next step.

No >> Repair the circuit for an open or short to ground in harness or connectors.
If circuit is normal, replace the ECM.

NOTE : The Immobilizer control module must be matched to the new ECM (See ECM Removal & Installation in Section 03 Electronic Engine Controls).

7. CHECK MAF SENSOR GROUND CIRCUIT FOR OPEN AND SHORT

- Turn ignition switch off.
- Disconnect ECM harness connector.
- Check harness continuity between MAF sensor terminal 3 and ECM terminal 17.
- Continuity should exist.
- Check harness for short to ground.

Is the check result normal?

Yes >> Go to the next step.

No >> Repair or replace open circuit or short to ground in harness or connectors.

8. CHECK THE MAF SENSOR OUTPUT SIGNAL CIRCUIT FOR AN OPEN OR SHORT

- Check harness continuity between MAF sensor terminal 5 and ECM terminal 37.
- Continuity should exist.
- Check harness for a short to ground or power.

Is the check result normal?

Yes >> Go to the next step.

No >> Repair or replace circuit for an open or short to ground in harness or connectors.

Downloaded from www.Manualslib.com manuals search engine

9. CHECK MAF SENSOR SIGNAL

- Install all removed parts.
- Start engine.
- Check MAF sensor signal with the X-431.

ECM TERMINAL NO.	ITEM	CONDITION	DATA
37	Air flow sensor	• Engine is running • ECT: 78°C • Idle: 795 RPM • IAT: 36°C • IAT signal voltage: 1.88 V	Approximately 322 kg/h
			Approximately 1.39 V

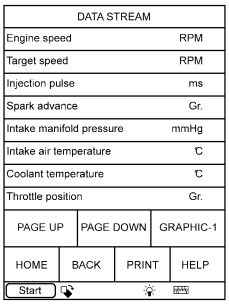

ltsmd030001t

- If without the X-431, check voltage between MAF sensor terminal 5 and ground.

ECM TERMINAL NO.	ITEM	CONDITION	DATA (AVERAGE DC VOLTAGE)
37	Air flow sensor	• Engine is running • ECT: 78°C • Idle: 795 RPM • IAT: 36°C • IAT signal: 1.88 V	Approximately 1.39 V

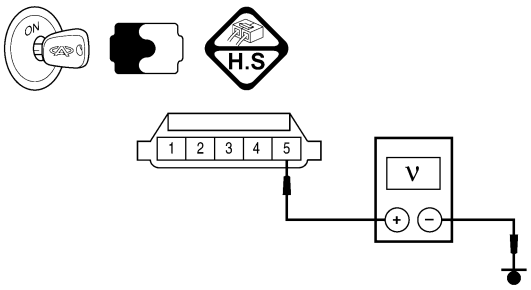

ltsmd030043

- If the signal voltage is out of specification, proceed with the following.
- Check for the causes of uneven air flow through the MAF sensor.
  - Crushed air ducts
  - Air cleaner seal
  - Uneven dirt of air cleaner element
- If the parts malfunctioning, repair or replace them.
- If the parts OK, clean the MAF sensor, then check the signal of the MAF sensor.

Is the signal voltage of MAF normal?

Yes >> Go to the next step.

No >> Replace MAF sensor.

Downloaded from www.Manualslib.com manuals search engine

10. CHECK DTC

- With the X-431 scan tool, read ECM DTCs.
- Refer to ″DTC Confirmation Procedure″.

Is DTC P0102 still present?

Yes >> Replace the ECM.

NOTE : The Immobilizer control module must be matched to the new ECM (See ECM Removal & Installation in Section 03 Electronic Engine Controls).

No >> The system is now operating properly.
Reassemble the vehicle and road test to verify the customers complaint is repaired.

Downloaded from www.Manualslib.com manuals search engine

P0103 - Mass Or Volume Air Flow Circuit High Input

EEC - 2.0L - MAF - 01

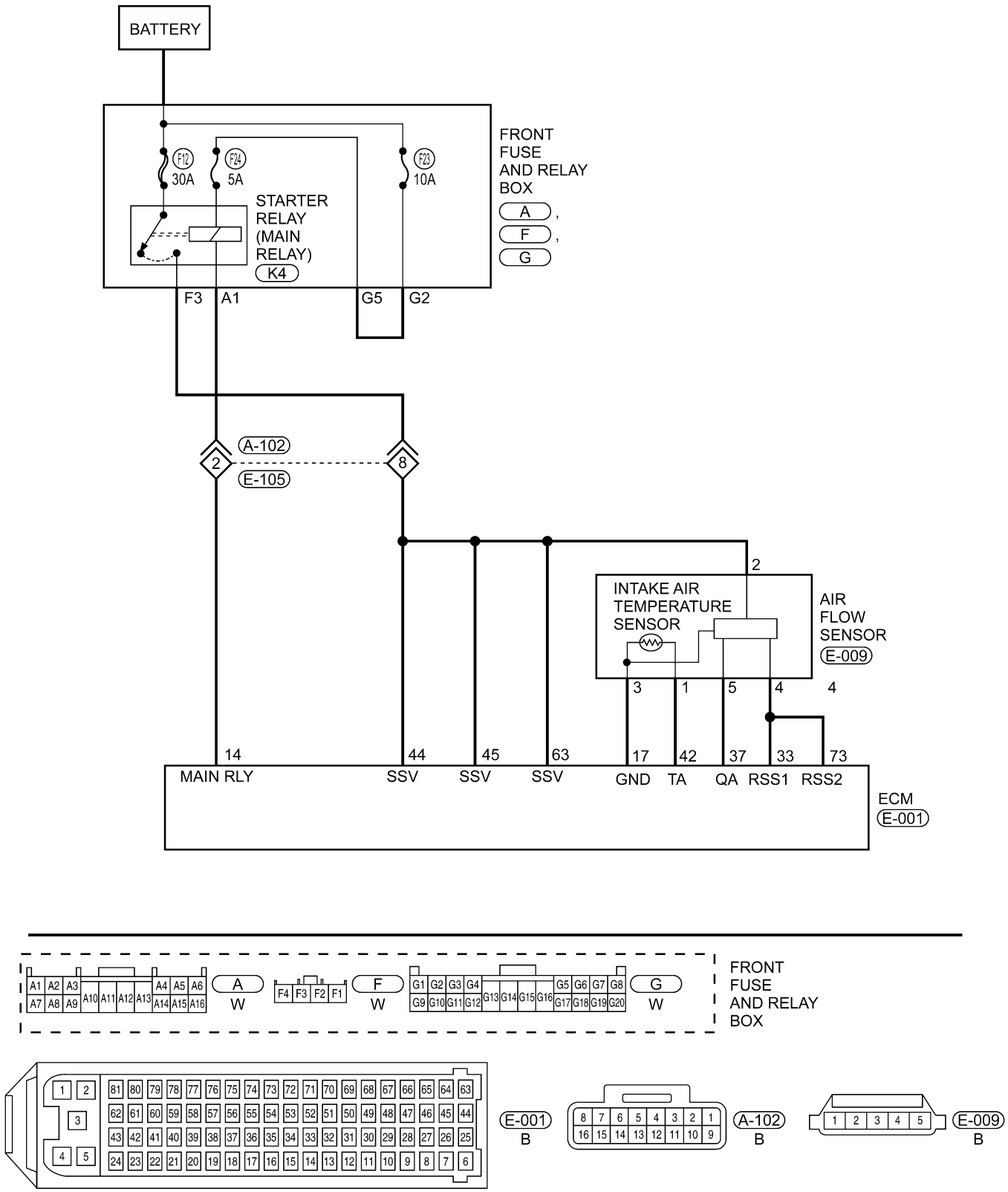

Downloaded from www.Manualslib.com manuals search engine

Check reference values between ECM terminals and ground under the following conditions:

ECM TERMINAL NO.	ITEM	CONDITION	DATA
17	Sensor (GND)	Ignition switch on	Approximately 0 V
33	Regulated sensor supply 1		5 V
37	Air flow sensor	• Engine is running • Warm-up condition ECT: 78°C • Idle: 795 RPM • IAT: 36°C • IAT signal: 1.88 V	• Approximately 322 kg/h • Approximately 1.39 V
		• Engine is running • Warm-up condition ECT: 52°C • Idle: 910 RPM • IAT: 30°C • IAT signal: 2.17 V	• Approximately 420 kg/h • 1.52 V

On Board Diagnostic Logic

- Self-diagnosis detection logic.

DTC NO.	DTC DEFINITION	DTC DETECTION CONDITION	DTC SET CONDITION	POSSIBLE CAUSE
P0103	Mass or Volume Air Flow (MAF) circuit high input	Ignition switch on or engine is running	ECM detected that the input signal is out of the acceptable range.	• MAF sensor • Harness or connectors • ECM

DTC Confirmation Procedure:

Before performing the following procedure, confirm that battery voltage is more than 12 V.

- Turn ignition switch off.
- Connect the X-431 scan tool to the Data Link Connector (DLC) - use the most current software available.
- Turn ignition switch on.
- With the scan tool, record and erase stored DTCs in the ECM.
- Start engine and warm it to normal operating temperature, then select view DTC and data stream.
- If the DTC is detected, the DTC condition is current. Go to Diagnostic Procedure - Step 1.
- If the DTC is not detected, the DTC condition is intermittent (See Diagnostic Help and Intermittent DTC Troubleshooting in Section 03 Electronic Engine Controls for more information.

NOTE :
While performing electrical diagnosis & testing, always refer to the electrical schematics for specific circuit and component information.

Downloaded from www.Manualslib.com manuals search engine

Diagnostic Procedure

1. CHECK GROUND CONNECTIONS

- Turn ignition switch off.
- Loosen and retighten ground screws on the body (See Ground Inspection in Section 03 Electronic Engine Controls).
- Inspect ground connections E-207 and E-208 mounting position (See Vehicle Wiring Harness Layout - Engine Room Harness (With 2.0L Engine) in Section 16 Wiring).

Are the ground connections OK?

Yes >> Go to the next step.

No >> Repair or replace ground harness or connections.

2. CHECK INTAKE SYSTEM

- Check the following for connection:
  - Air cleaner
  - Intake air duct

Is the check result normal?

Yes >> Go to the next step.

No >> Clean or replace the components.

3. CHECK MAF SENSOR ELECTRICAL CONNECTOR

- Disconnect the MAF sensor electrical connector (1).
- Inspect the electrical connector for damage.

Is the electrical connector OK?

Yes >> Go to the next step.

No >> Repair or replace the electrical connector as necessary.

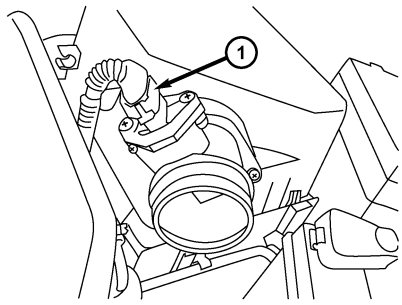

vismd030005

Downloaded from www.Manualslib.com manuals search engine

4. CHECK MAF SENSOR POWER SUPPLY CIRCUIT

- Turn ignition switch on.
- Check voltage between MAF sensor terminal 4 and ground in the MAF sensor electrical connector E-009.
- 5 V should exist.

Is the check result normal?

Yes >> Go to step 6.

No >> Go to the next step.

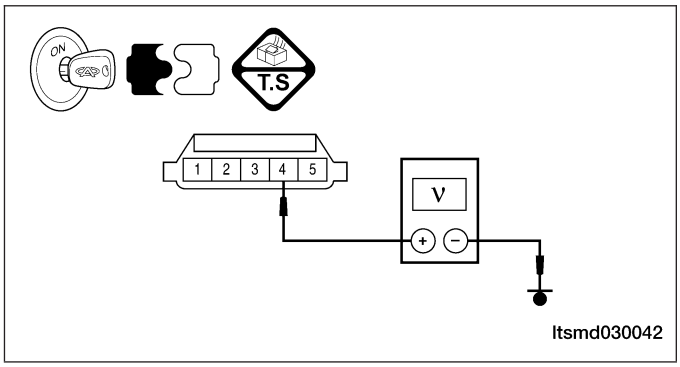

5. DETECT MALFUNCTIONING PART

- Check harness for short to power between air flow sensor and ECM.

Is the check result normal?

Yes >> Go to the next step.

No >> Repair or replace circuit for a short to power in harness or connectors.

6. CHECK MAF SENSOR GROUND CIRCUIT FOR SHORT

- Turn ignition switch off.
- Disconnect ECM harness connector.
- Check harness continuity between MAF sensor terminal 3 and ECM terminal 17.
- Continuity should exist.
- Check harness for short to power.

Is the check result normal?

Yes >> Go to the next step.

No >> Repair or replace circuit for short to power in harness or connectors.

7. CHECK MAF SENSOR OUTPUT SIGNAL CIRCUIT

- Check harness continuity between MAF sensor terminal 5 and ECM terminal 37.
- Continuity should exist.
- Check harness for short to power.

Is the check result normal?

Yes >> Go to the next step.

No >> Repair or replace circuit for short to power in harness or connectors.

Downloaded from www.Manualslib.com manuals search engine

8. CHECK MAF SENSOR

- Install all removed parts.
- Check MAF signal in data stream with the X-431.

ECM TERMINAL NO.	ITEM	CONDITION	DATA
37	Air flow sensor	• Engine is running • ECT: 78°C • Idle: 795 RPM • IAT: 36°C • IAT signal: 1.88 V	Approximately 322 kg/h
			Approximately 1.39 V

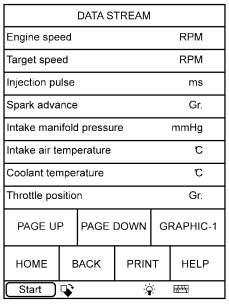

ltsmd030001t

- If without the X-431, check voltage between MAF sensor terminal 5 and ground.

ECM TERMINAL NO.	ITEM	CONDITION	DATA (AVERAGE DC VOLTAGE)
37 (MAF sensor connector terminal 5)	Air flow sensor	• Engine is running • ECT: 78°C • Idle: 795 RPM • IAT: 36°C • IAT signal: 1.88 V	Approximately 1.39 V

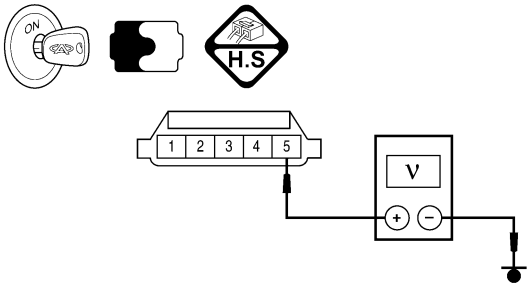

ltsmd030043

Is the signal voltage of MAF normal?

Yes >> Go to the next step.

No >> Replace MAF sensor.

9. CHECK DTC

- With the X-431 scan tool, read ECM DTCs.
- See DTC Confirmation Procedure.

Is DTC P0103 still present?

Yes >> Replace the ECM.

NOTE : The Immobilizer control module must be matched to the new ECM (See ECM Removal & Installation in Section 03 Electronic Engine Controls).

No >> The system is now operating properly.
Reassemble the vehicle and road test to verify the customers complaint is repaired.

Downloaded from www.Manualslib.com manuals search engine

P0112 - Intake Air Temperature Circuit Low Input

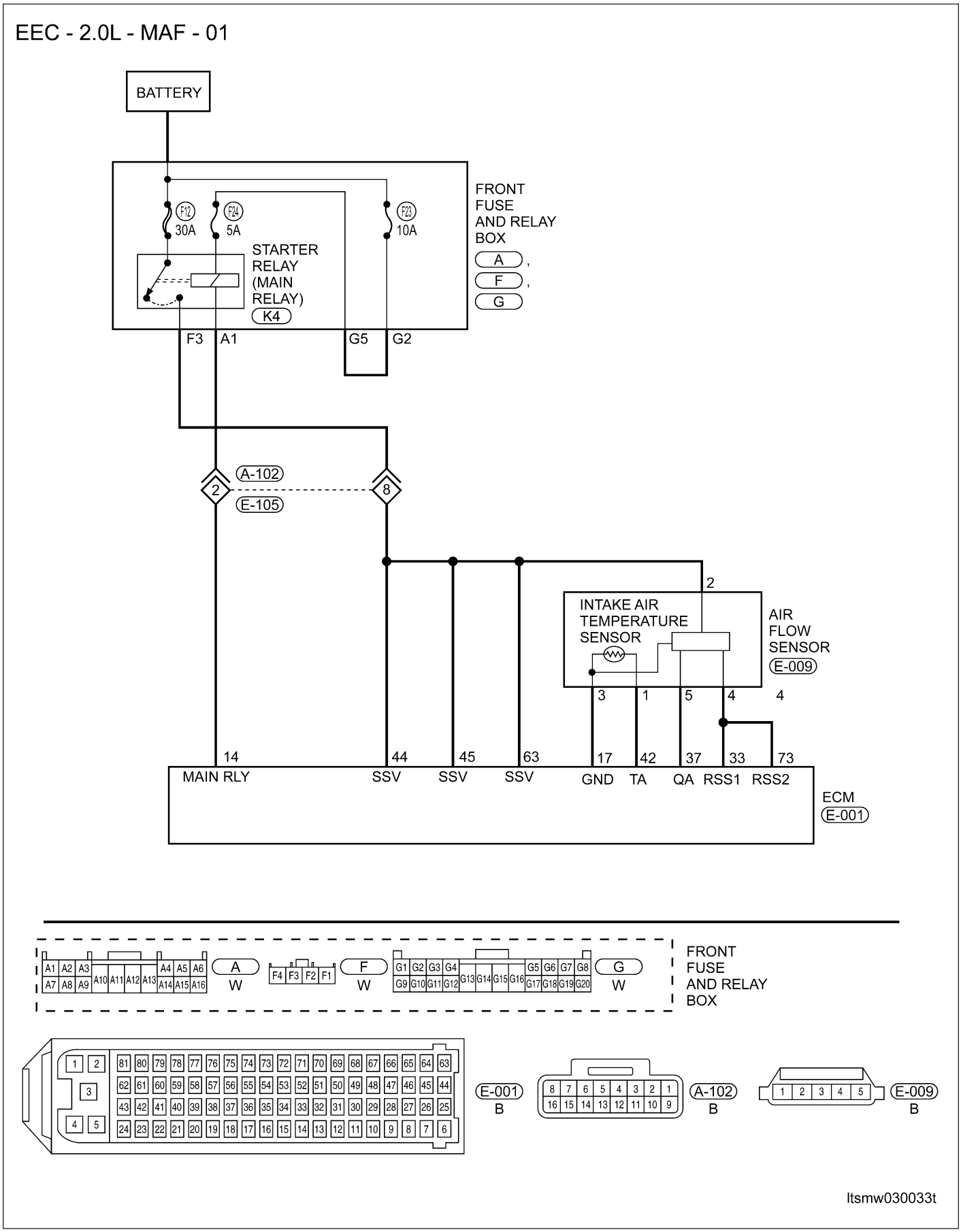

Downloaded from www.Manualslib.com manuals search engine

Check reference values between ECM terminals and ground under the following conditions:

ECM TERMINAL NO.	ITEM	CONDITION		DATA (DC VOLTAGE)
17	Sensor (GND)	Ignition switch: ON		0 V
42	Intake Air Temperature (IAT) sensor	Ignition switch: ON	IAT: 36°C	Approximately 1.88 V

On Board Diagnostic Logic

- Self-diagnosis detection logic.

DTC NO.	DTC DEFINITION	DTC DETECTION CONDITION	DTC SET CONDITION	POSSIBLE CAUSE
P0112	Intake Air Temperature (IAT) circuit low input	• Ignition switch: ON • Engine: Running	Output signal is wrong or out of acceptable range.	• IAT sensor • Harness or connectors • Engine temperature • ECM

DTC Confirmation Procedure:

Before performing the following procedure, confirm that battery voltage is more than 12 V.
- Turn ignition switch off.
- Connect the X-431 scan tool to the Data Link Connector (DLC) - use the most current software available.
- Turn ignition switch on.
- With the scan tool, record and erase stored DTCs in the ECM.
- Start engine and warm it to normal operating temperature, then select view DTC and data stream.
- If the DTC is detected, the DTC condition is current. Go to Diagnostic Procedure - Step 1.
- If the DTC is not detected, the DTC condition is intermittent (See Diagnostic Help and Intermittent DTC Troubleshooting in Section 03 Electronic Engine Controls for more information.

NOTE :
While performing electrical diagnosis & testing, always refer to the electrical schematics for specific circuit and component information.

Diagnostic Procedure

1. CHECK GROUND CONNECTIONS

- Turn ignition switch off.
- Loosen and retighten ground screws on the body (See Ground Inspection in Section 03 Electronic Engine Controls).
- Inspect ground connections E-207 and E-208 mounting position (See Vehicle Wiring Harness Layout - Engine Room Harness (With 2.0L Engine) in Section 16 Wiring).

Are the ground connections OK?

Yes >> Go to the next step.

No >> Repair or replace ground connections.

Downloaded from www.Manualslib.com manuals search engine

2. CHECK IAT SENSOR ELECTRICAL CONNECTOR

- Disconnect the IAT sensor (IAT sensor is built-into) electrical connector (1).
- Inspect the electrical connector for damage.

Is the electrical connector OK?

Yes >> Go to the next step.

No >> Repair or replace the electrical connector as necessary.

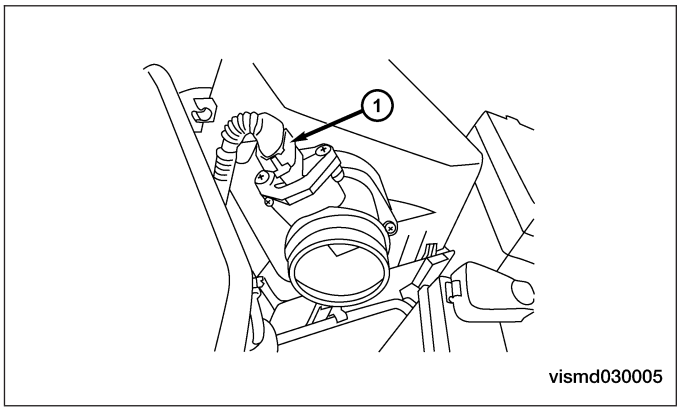

3. CHECK IAT SENSOR SIGNAL CIRCUIT

- Turn ignition switch on.
- Check reference voltage between IAT sensor terminal 1 and ground in the IAT sensor electrical connector E-009.
- 5 V should exist.

Is the check result normal?

Yes >> Go to Step 5.

No >> Go to the next step.

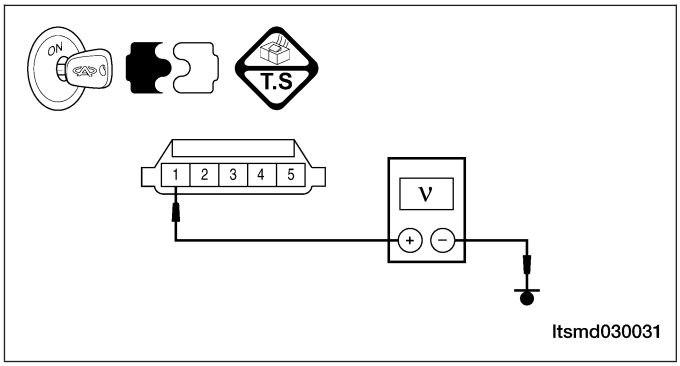

4. DETECT MALFUNCTIONING PART

- Turn ignition switch off.
- Disconnect ECM harness connector.
- Check harness for short to ground between IAT connector terminal 1 and ECM connector E-001, terminal 42.

Is the check result normal?

Yes >> Replace the ECM.

NOTE : The Immobilizer control module must be matched to the new ECM (See ECM Removal & Installation in Section 03 Electronic Engine Controls).

No >> Repair or replace the circuit for short to ground in harness or connectors.

Downloaded from www.Manualslib.com manuals search engine

5. CHECK IAT SENSOR

- Connect IAT sensor connector.
- Connect ECM connector.
- Turn ignition switch on.
- Check signal between IAT sensor terminal 1 and ground under the following conditions:

TERMINAL NO.	ITEM	CONDITION		DATA (DC VOLTAGE)
42	IAT sensor	Ignition switch on	IAT: 36°C	1.88 V

Is the check result normal?

Yes >> Go to the next step.

No >> Replace IAT sensor.

6. CHECK DTC

- With the X-431 scan tool, read ECM DTCs.
- Refer to ″DTC Confirmation Procedure″.

Is DTC P0112 still present?

Yes >> Replace the ECM.

NOTE : The Immobilizer control module must be matched to the new ECM (See ECM Removal & Installation in Section 03 Electronic Engine Controls).

No >> The system is now operating properly.
Reassemble the vehicle and road test to verify the customers complaint is repaired.

Downloaded from www.Manualslib.com manuals search engine

P0113 - Intake Air Temperature Circuit High Input

EEC - 2.0L - MAF - 01

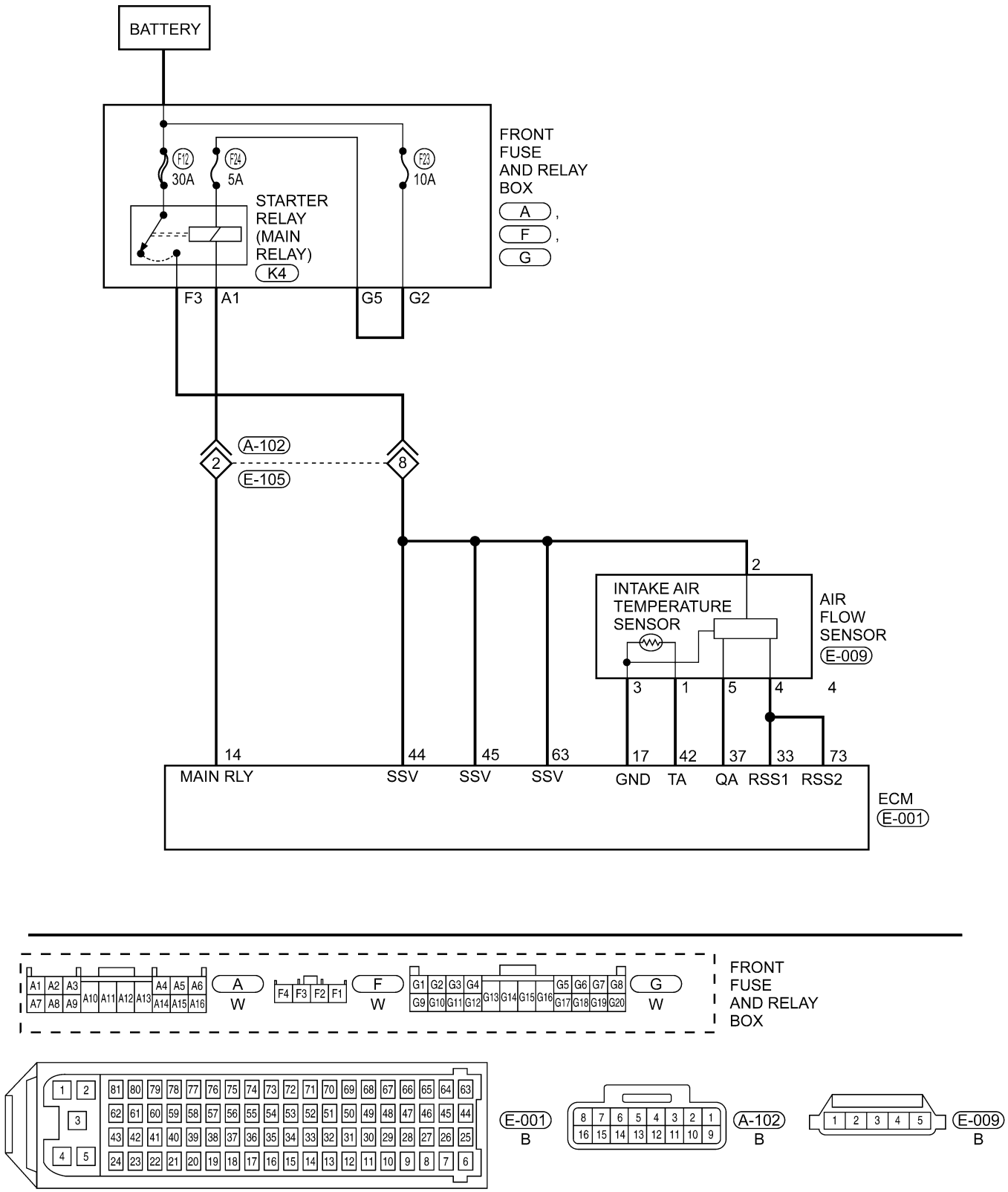

ltsmw030033t

Downloaded from www.Manualslib.com manuals search engine

Check reference values between ECM terminals and ground under the following conditions:

ECM TERMINAL NO.	ITEM	CONDITION		DATA (DC VOLTAGE)
17	Sensor (GND)	Ignition switch: ON		0 V
42	Intake Air Temperature (IAT) sensor	Ignition switch: ON	IAT: 36°C	Approximately 1.88 V

On Board Diagnostic Logic

- Self-diagnosis detection logic.

DTC NO.	DTC DEFINITION	DTC DETECTION CONDITION	DTC SET CONDITION	POSSIBLE CAUSE
P0113	Intake air temperature circuit high input	• Ignition switch: ON • Engine: Running	Output signal is wrong or out of acceptable range.	• IAT sensor • Harness or connectors • ECM

DTC Confirmation Procedure:

Before performing the following procedure, confirm that battery voltage is more than 12 V.

- Turn ignition switch off.
- Connect the X-431 scan tool to the Data Link Connector (DLC) - use the most current software available.
- Turn ignition switch on.
- With the scan tool, record and erase stored DTCs in the ECM.
- Start engine and warm it to normal operating temperature, then select view DTC and data stream.
- If the DTC is detected, the DTC condition is current. Go to Diagnostic Procedure - Step 1.
- If the DTC is not detected, the DTC condition is intermittent (See Diagnostic Help and Intermittent DTC Troubleshooting in Section 03 Electronic Engine Controls for more information.

NOTE :
While performing electrical diagnosis & testing, always refer to the electrical schematics for specific circuit and component information.

Diagnostic Procedure

1. CHECK GROUND CONNECTIONS

- Turn ignition switch off.
- Loosen and retighten ground screws on the body (See Ground Inspection in Section 03 Electronic Engine Controls).
- Inspect ground connections E-207 and E-208 mounting position (See Vehicle Wiring Harness Layout - Engine Room Harness (With 2.0L Engine) in Section 16 Wiring).

Are the ground connections OK?

Yes >> Go to the next step.

No >> Repair or replace ground connections.

Downloaded from www.Manualslib.com manuals search engine

2. CHECK IAT SENSOR ELECTRICAL CONNECTOR

- Disconnect the IAT sensor (IAT sensor is built-into) electrical connector (1).
- Inspect the electrical connector for damage.

Is the electrical connector OK?

Yes >> Go to the next step.

No >> Repair or replace the electrical connector as necessary.

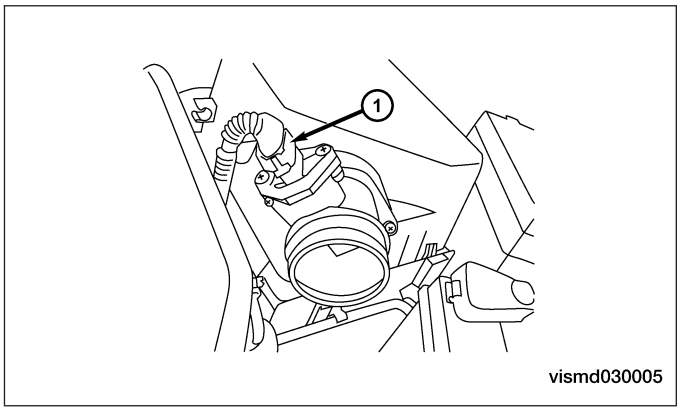

3. CHECK INTAKE AIR TEMPERATURE (IAT) SENSOR SIGNAL CIRCUIT

- Turn ignition switch on.
- Check supply voltage between IAT sensor terminal 1 and ground in the IAT sensor electrical connector E-009.
- 5 V should exist.

Is the check result normal?

Yes >> Go to the next step.

No >> Repair circuit for an open or short to power in harness or connectors.
If circuit is normal, go to the next step.

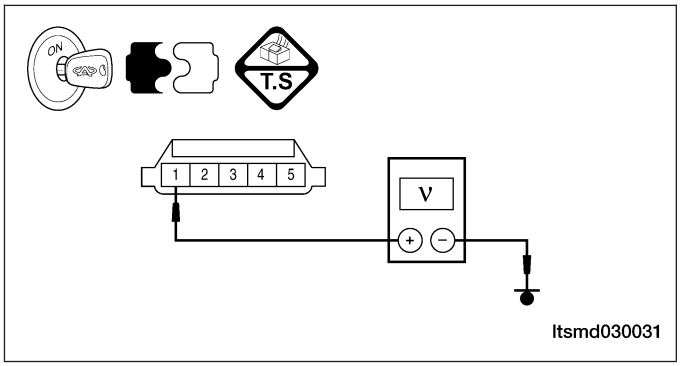

4. CHECK IAT SENSOR GROUND CIRCUIT FOR AN OPEN OR SHORT

- Turn ignition switch off.
- Disconnect ECM harness connector.
- Check harness continuity between following terminals.

IAT SENSOR TERMINAL	ECM TERMINAL
3	17

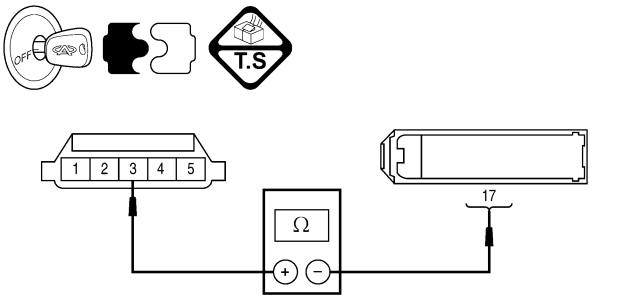

Downloaded from www.Manualslib.com manuals search engine

- Continuity should exist.
- Check harness for short to power.

Is the check result normal?

Yes >> Go to the next step.

No >> Repair circuit for an open or short to power in harness or connectors.

5. CHECK IAT SENSOR

- Connect IAT sensor connector.
- Connect ECM connector.
- Turn ignition switch on.
- Check signal between air flow sensor terminal 1 and ground under the following conditions:

TERMINAL NO.	ITEM	CONDITION		DATA (DC VOLTAGE)
42	IAT sensor	Ignition switch on	IAT: 36°C	Approximately 1.88 V

Is the check result normal?

Yes >> Go to the next step.

No >> Replace IAT sensor.

6. CHECK DTC

- With the X-431 scan tool, read ECM DTCs.
- Refer to ″DTC Confirmation Procedure″.

Is DTC P0113 still present?

Yes >> Replace the ECM.

NOTE : The Immobilizer control module must be matched to the new ECM (See ECM Removal & Installation in Section 03 Electronic Engine Controls).

No >> The system is now operating properly.
Reassemble the vehicle and road test to verify the customers complaint is repaired.

Downloaded from www.Manualslib.com manuals search engine

P0117 - Engine Coolant Temperature Circuit Low Input

EEC - 2.0L - ECT - 01

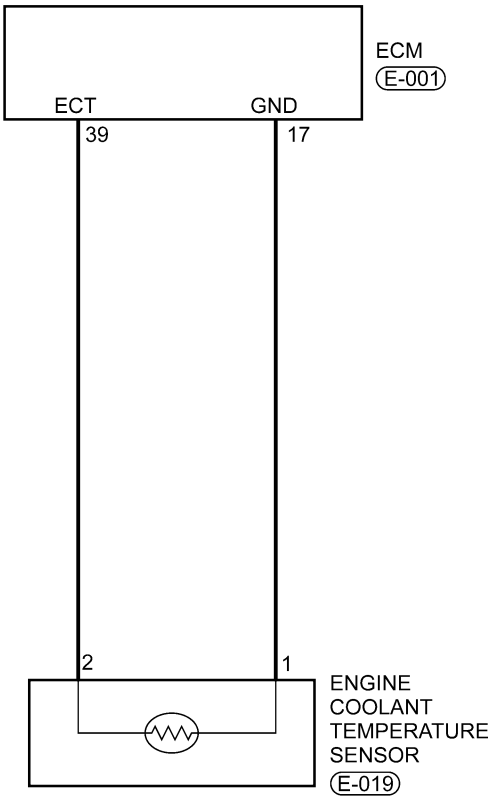

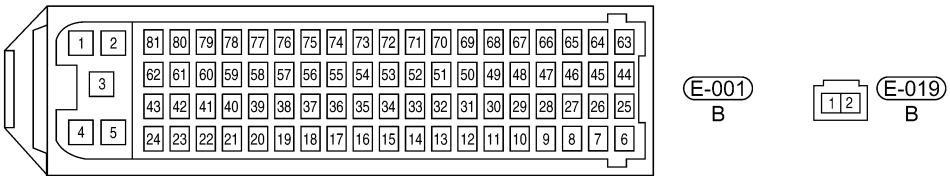

ltsmw030034t

Downloaded from www.Manualslib.com manuals search engine

Check reference values between ECM terminals and ground under the following conditions:

ECM TERMINAL NO.	ITEM	CONDITION		DATA (DC VOLTAGE)
39	Engine Coolant Temperature (ECT) sensor	Ignition switch: ON	ECT: 59°C	Approximately 1.89 V
			ECT: 78°C	Approximately 1.25 V
			ECT: 90°C	Approximately 0.94 V
17	Sensor (GND)		-	Approximately 0 V

On Board Diagnostic Logic

- Self-diagnosis detection logic.

DTC NO.	DTC DEFINITION	DTC DETECTION CONDITION	DTC SET CONDITION	POSSIBLE CAUSE
P0117	Engine coolant temperature circuit low input	• Ignition switch: ON • Engine: Running	Signal output is below minimum acceptable range for a few seconds continuously.	• ECT sensor • Harness or connectors • ECM

DTC Confirmation Procedure:

Before performing the following procedure, confirm that battery voltage is more than 12 V.

- Turn ignition switch off.
- Connect the X-431 scan tool to the Data Link Connector (DLC) - use the most current software available.
- Turn ignition switch on.
- With the scan tool, record and erase stored DTCs in the ECM.
- Start engine and warm it to normal operating temperature, then select view DTC and data stream.
- If the DTC is detected, the DTC condition is current. Go to Diagnostic Procedure - Step 1.
- If the DTC is not detected, the DTC condition is intermittent (See Diagnostic Help and Intermittent DTC Troubleshooting in Section 03 Electronic Engine Controls for more information.

NOTE :

- Before performing this DTC diagnostic procedure, verify that the engine coolant temperature is normal.

NOTE :

While performing electrical diagnosis & testing, always refer to the electrical schematics for specific circuit and component information.

Diagnostic Procedure

1. CHECK GROUND CONNECTIONS

- Turn ignition switch off.
- Loosen and retighten ground screws on the body (See Ground Inspection in Section 03 Electronic Engine Controls).
- Inspect ground connections E-207 and E-208 mounting position (See Vehicle Wiring Harness Layout - Engine Room Harness (With 2.0L Engine) in Section 16 Wiring).

Are the ground connections OK?

Yes >> Go to the next step.

No >> Repair or replace ground harness or connections.

Downloaded from www.Manualslib.com manuals search engine

2. CHECK ENGINE COOLANT TEMPERATURE (ECT) SENSOR ELECTRICAL CONNECTOR

- Disconnect the ECT sensor electrical connector (1).
- Inspect the electrical connector for damage.

Is the electrical connector OK?

Yes >> Go to the next step.

No >> Repair or replace the electrical connector as necessary.

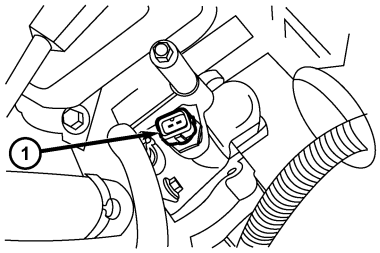

besm030019

3. CHECK ENGINE COOLANT TEMPERATURE (ECT) SENSOR SIGNAL CIRCUIT FOR A SHORT

- Turn ignition switch on.
- Check reference voltage between ECT sensor terminal 2 and ground in the sensor electrical connector E-019.
- 4.5 - 4.9 V should exist.

Is the check result normal?

Yes >> Go to step 5.

No >> Go to the next step.

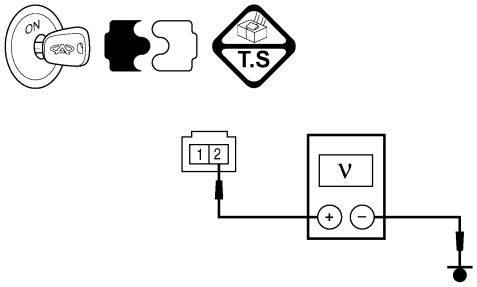

ltsmd030032

4. DETECT MALFUNCTIONING PART

- Turn ignition switch off.
- Disconnect ECM harness connector.
- Check harness for a short to ground between ECT sensor connector terminal 2 and ECM connector E-001, terminal 39.

Is the check result normal?

Yes >> Replace the ECM.

NOTE : The Immobilizer control module must be matched to the new ECM (See ECM Removal & Installation in Section 03 Electronic Engine Controls).

No >> Repair or replace circuit for a short in harness or connectors.

Downloaded from www.Manualslib.com manuals search engine

5. CHECK ECT SENSOR

- Check resistance between ECT sensor terminal 1 and 2.

ECT°C	RESISTANCE KΩ
10°C	8.62 - 10.28
20°C	2.37 - 2.63
80°C	0.299 - 0.345

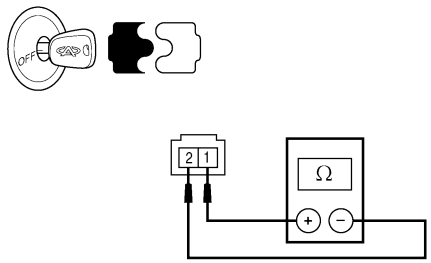

ltsmd030034

- Connect ECT sensor connector.
- Connect ECM connector.
- Turn ignition switch on.
- Check sensor output signal.

TERMINAL NO.	ITEM	CONDITION		DATA (DC VOLTAGE)
39	ECT sensor	Ignition switch on	ECT: 59°C	Approximately 1.89 V
			ECT: 78°C	Approximately 1.25 V
			ECT: 90°C	Approximately 0.94 V
17	Sensor (GND)		-	Approximately 0 V

Is the check result normal?

Yes >> Go to the next step.

No >> Replace ECT sensor.

6. CHECK DTC

- With the X-431 scan tool, read ECM DTCs.
- Refer to ″DTC Confirmation Procedure″.

Is DTC P0117 still present?

Yes >> Replace the ECM.

NOTE : The Immobilizer control module must be matched to the new ECM (See ECM Removal & Installation in Section 03 Electronic Engine Controls).

No >> The system is now operating properly.
Reassemble the vehicle and road test to verify the customers complaint is repaired.

Downloaded from www.Manualslib.com manuals search engine

P0118 - Engine Coolant Temperature Circuit High Input

EEC - 2.0L - ECT - 01

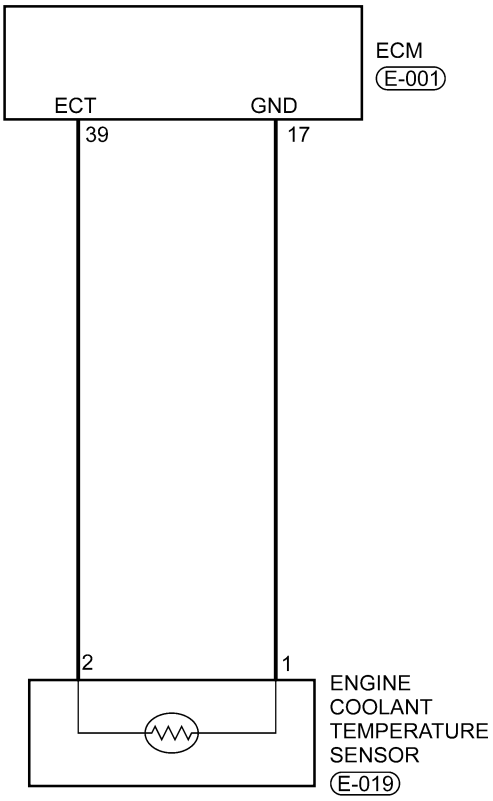

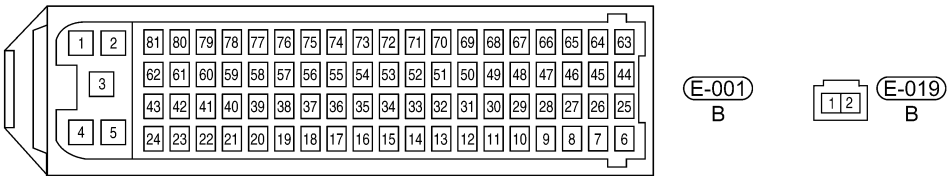

ltsmw030034t

Downloaded from www.Manualslib.com manuals search engine

Check reference values between ECM terminals and ground under the following conditions:

ECM TERMINAL NO.	ITEM	CONDITION		DATA (DC VOLTAGE)
39	Engine Coolant Temperature (ECT) sensor	Ignition switch: ON	ECT: 59°C	Approximately 1.89 V
			ECT: 78°C	Approximately 1.25 V
			ECT: 90°C	Approximately 0.94 V
17	Sensor (GND)		-	Approximately 0 V

On Board Diagnostic Logic

- Self-diagnosis detection logic.

DTC NO.	DTC DEFINITION	DTC DETECTION CONDITION	DTC SET CONDITION	POSSIBLE CAUSE
P0118	Engine coolant temperature circuit high input	• Ignition switch: ON • Engine: Running	Signal output is above maximum acceptable range for a few seconds continuously.	• ECT • Harness or connectors • ECM

DTC Confirmation Procedure:

Before performing the following procedure, confirm that battery voltage is more than 12 V.

- Turn ignition switch off.
- Connect the X-431 scan tool to the Data Link Connector (DLC) - use the most current software available.
- Turn ignition switch on.
- With the scan tool, record and erase stored DTCs in the ECM.
- Start engine and warm it to normal operating temperature, then select view DTC and data stream.
- If the DTC is detected, the DTC condition is current. Go to Diagnostic Procedure - Step 1.
- If the DTC is not detected, the DTC condition is intermittent (See Diagnostic Help and Intermittent DTC Troubleshooting in Section 03 Electronic Engine Controls for more information.

NOTE :
While performing electrical diagnosis & testing, always refer to the electrical schematics for specific circuit and component information.

Diagnostic Procedure

1. CHECK GROUND CONNECTIONS

- Turn ignition switch off.
- Loosen and retighten ground screws on the body (See Ground Inspection in Section 03 Electronic Engine Controls).
- Inspect ground connections E-207 and E-208 mounting position (See Vehicle Wiring Harness Layout - Engine Room Harness (With 2.0L Engine) in Section 16 Wiring).

Are the ground connections OK?

Yes >> Go to the next step.

No >> Repair or replace ground connections.

Downloaded from www.Manualslib.com manuals search engine

2. CHECK ENGINE COOLANT TEMPERATURE (ECT) SENSOR ELECTRICAL CONNECTOR

- Disconnect the ECT sensor electrical connector (1).
- Inspect the electrical connector for damage.

Is the electrical connector OK?

Yes >> Go to the next step.

No >> Repair or replace the electrical connector as necessary.

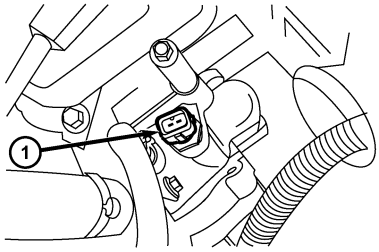

besm030019

3. CHECK THE ECT SENSOR SIGNAL CIRCUIT FOR A SHORT

- Turn ignition switch on.
- Check ECT sensor reference voltage between sensor terminal 2 and ground in the sensor electrical connector E-019.
- 4.5 - 4.9 V should exist.

Is the check result normal?

Yes >> Go to the next step.

No >> Repair or replace harness for an open or short to power between ECT connector terminal 2 and ECM connector E-001, terminal 39.
If harness is normal, replace the ECM.

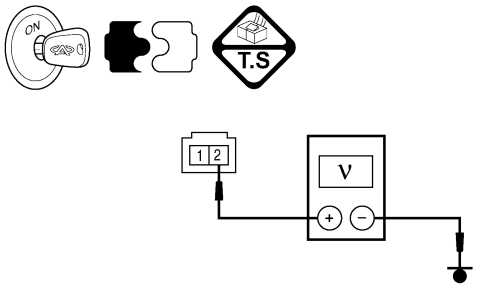

ltsmd030032

NOTE : The Immobilizer control module must be matched to the new ECM (See ECM Removal & Installation in Section 03 Electronic Engine Controls).

4. CHECK ECT SENSOR GROUND CIRCUIT FOR AN OPEN AND SHORT

- Turn ignition switch off.
- Check harness continuity between following terminals.

ECT SENSOR TERMINAL	ECM TERMINAL	CONTINUITY
1	17	Yes

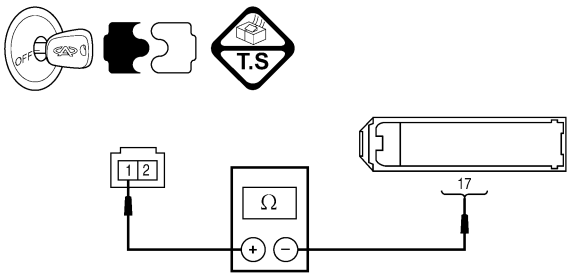

ltsmd030033

Downloaded from www.Manualslib.com manuals search engine

- Continuity should exist.
- Check harness for short to power.

Is the check result normal?

Yes >> Go to the next step.

No >> Repair circuit for an open or short to power in harness or connectors.

5. CHECK ECT SENSOR

- Check resistance between ECT sensor terminal 1 and 2.

ECT°C	RESISTANCE KΩ
-10°C	8.62 - 10.28
20°C	2.37 - 2.63
80°C	0.299 - 0.345

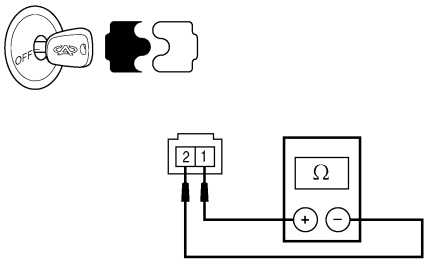

ltsmd030034

- Connect ECT sensor connector.
- Connect ECM connector.
- Turn ignition switch on.
- Check sensor signal output.

TERMINAL NO.	ITEM	CONDITION		DATA (DC VOLTAGE)
39	ECT sensor	Ignition switch: ON	ECT: 59°C	1.89 V
			ECT: 78°C	1.25 V
			ECT: 90°C	0.94 V
17	Sensor (GND)		-	Approximately 0 V

Is the check result normal?

Yes >> Go to the next step.

No >> Replace ECT sensor.

Downloaded from www.Manualslib.com manuals search engine

6. CHECK DTC

- With the X-431 scan tool, read ECM DTCs.
- Refer to ″DTC Confirmation Procedure″.

Is DTC P0118 still present?

Yes >> Replace the ECM.

NOTE : The Immobilizer control module must be matched to the new ECM (See ECM Removal & Installation in Section 03 Electronic Engine Controls).

No >> The system is now operating properly.
Reassemble the vehicle and road test to verify the customers complaint is repaired.

Downloaded from www.Manualslib.com manuals search engine

P0122 - Throttle Position Sensor A Circuit Low Input

EEC - 2.0L - TPS - 01

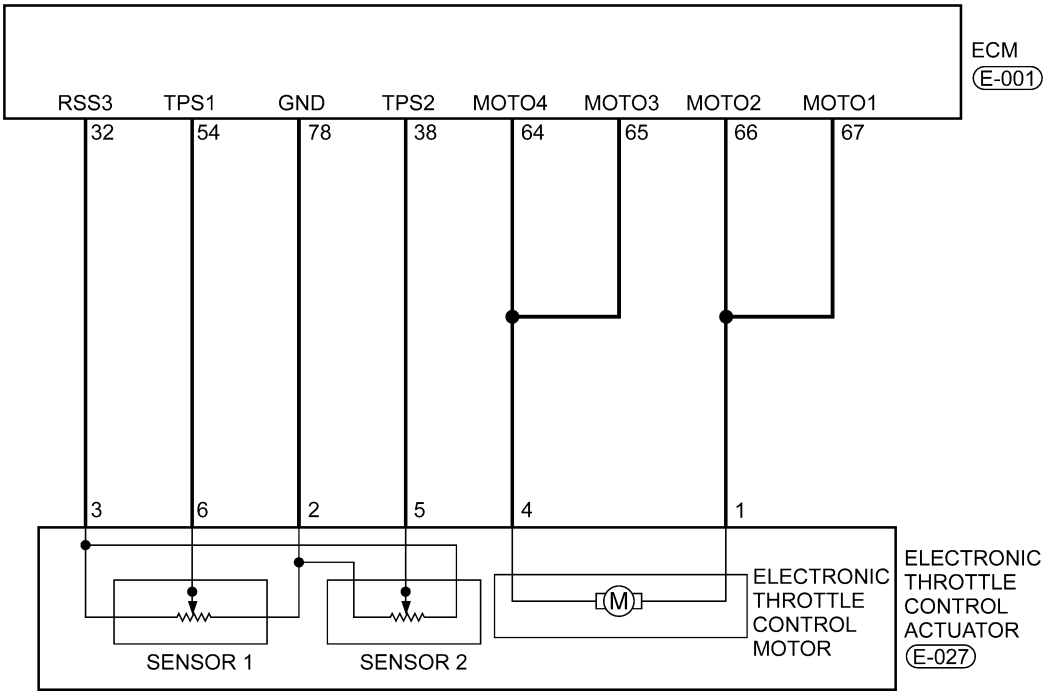

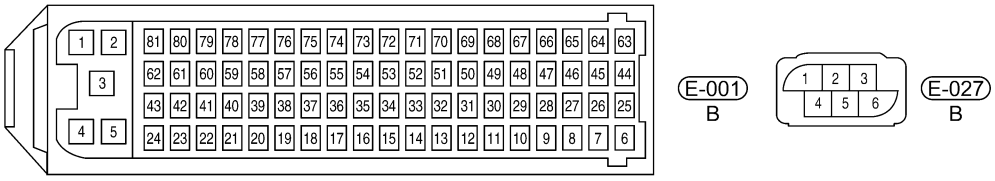

ltsmw030025t

Downloaded from www.Manualslib.com manuals search engine

Check reference values between ECM terminals and ground under the following conditions:

ECM TERMINAL NO.	ITEM	CONDITION		DATA (DC VOLTAGE)
32	Regulated sensor supply	Ignition switch: ON	-	Approximately 5 V
38	Electronic throttle control actuator (position sensor)		• Engine stopped • Accelerator pedal: Fully released	4.24 V
			• Engine stopped • Accelerator pedal: Fully depressed	0.72 V
54	Electronic throttle control actuator		• Engine stopped • Accelerator pedal: Fully released	0.74 V
			• Engine stopped • Accelerator pedal: Fully depressed	4.62 V
64	Motor 4		-	12 V or 0 V
65	Motor 3			
66	Motor 2			12 V or 0 V
67	Motor 1			
78	Sensor (GND)			Approximately 0 V

On Board Diagnostic Logic

- Self-diagnosis detection logic.

DTC NO.	DTC DEFINITION	DTC DETECTION CONDITION	DTC SET CONDITION	POSSIBLE CAUSE
P0122	Throttle position sensor A circuit low input	• Ignition switch: ON • Engine: Running	Signal output is below minimum acceptable range for a few seconds continuously.	• TPS or misalignment • Harness or connectors • ECM

DTC Confirmation Procedure:

Before performing the following procedure, confirm that battery voltage is more than 12 V.

- Turn ignition switch off.
- Connect the X-431 scan tool to the Data Link Connector (DLC) - use the most current software available.
- Turn ignition switch on.
- With the scan tool, record and erase stored DTCs in the ECM.
- Start engine and warm it to normal operating temperature, then select view DTC and data stream.
- If the DTC is detected, the DTC condition is current. Go to Diagnostic Procedure - Step 1.
- If the DTC is not detected, the DTC condition is intermittent (See Diagnostic Help and Intermittent DTC Troubleshooting in Section 03 Electronic Engine Controls for more information.

NOTE :

While performing electrical diagnosis & testing, always refer to the electrical schematics for specific circuit and component information.

Downloaded from www.Manualslib.com manuals search engine

Diagnostic Procedure

1. CHECK GROUND CONNECTIONS

- Turn ignition switch off.
- Loosen and retighten ground screws on the body (See Ground Inspection in Section 03 Electronic Engine Controls).
- Inspect ground connections E-207 and E-208 mounting position (See Vehicle Wiring Harness Layout - Engine Room Harness (With 2.0L Engine) in Section 16 Wiring).

Are the ground connections OK?

Yes >> Go to the next step.

No >> Repair or replace ground harness or connections.

2. CHECK TPS SENSOR ELECTRICAL CONNECTOR

- Disconnect the TPS electrical connector (1).
- Inspect the electrical connector for damage.

Is the electrical connector OK?

Yes >> Go to the next step.

No >> Repair or replace the electrical connector as necessary.

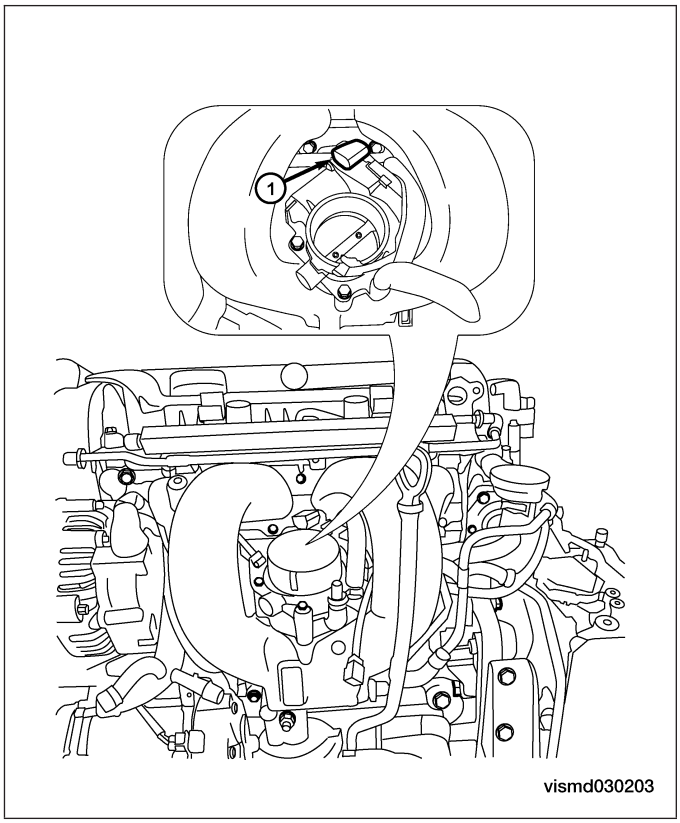

Downloaded from www.Manualslib.com manuals search engine

3. CHECK THE TPS POWER SUPPLY CIRCUIT

- Turn ignition switch on.
- Check throttle position sensor supply voltage between sensor terminal 3 and ground in the sensor electrical connector E-027.
- 5.0 V should exist.

Is the check result normal?

Yes >> Go to the next step.

No >> Repair circuit for an open or short to ground in harness or connectors.
If harness is normal, replace the ECM.

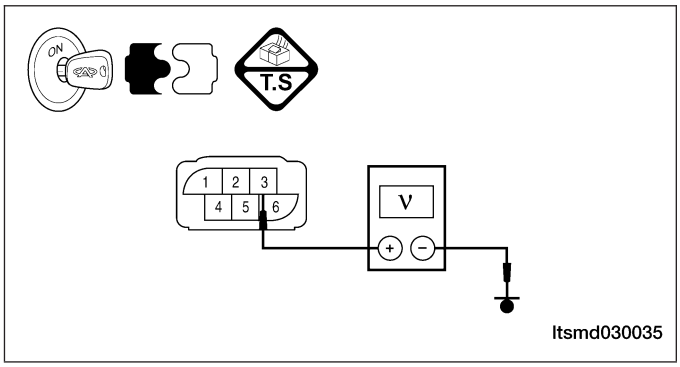

NOTE : The Immobilizer control module must be matched to the new ECM (See ECM Removal & Installation in Section 03 Electronic Engine Controls).

4. CHECK TPS SIGNAL CIRCUIT FOR AN OPEN OR SHORT

- Turn ignition switch off.
- Disconnect ECM harness connector.
- Check harness continuity between following terminals.

TPS TERMINAL	ECM TERMINAL
6	54
5	38

- Continuity should exist.
- Check harness for a short to power.

Is the check result normal?

Yes >> Go to step 6.

No >> Go to the next step.

5. DETECT MALFUNCTIONING PART

- Check harness for an open or a short to ground between TPS connector terminal 2 and ECM connector E-001, terminal 78.

Is the check result normal?

Yes >> Go to the next step.

No >> Repair or replace harness or connectors.

Downloaded from www.Manualslib.com manuals search engine

6. CHECK TPS RESISTANCE

- Check resistance between TPS terminal 2 and terminal 3.
- 2 kΩ ± 20 % (20°C) should exist.
- Check the resistance between TPS terminal 6 and terminal 2 while moving the throttle.
- The resistance should be a linear change.

Is the check result normal?

Yes >> Go to the next step.

No >> Replace TPS.
Perform TPS self-learning.

7. CHECK THE TPS

- Turn ignition switch off.
- Connect ECM connector.
- Connect TPS connector.
- Turn ignition switch on.
- Check voltage between TPS terminal 3 and ground under the following conditions:

TERMINAL NO.	ITEM	CONDITION		DATA (DC VOLTAGE)
32	Regulated sensor supply 2	Ignition switch: ON	-	Approximately 5 V
38	Electronic throttle control actuator (position sensor)		• Engine stopped • Accelerator pedal: Fully released	4.24 V
			• Engine stopped • Accelerator pedal: Fully pressed	0.72 V
54	Electronic throttle control actuator (position sensor)		• Engine stopped • Accelerator pedal: Fully released	0.74 V
			• Engine stopped • Accelerator pedal: Fully depressed	4.62 V
64	Motor 4		-	12 V or 0 V
65	Motor 3			
66	Motor 2			12 V or 0 V
67	Motor 1			
78	Sensor (GND)			Approximately 0 V

Is the check result normal?

Yes >> Go to the next step.

No >> Replace the TPS.
Perform the TPS self-learning.

Downloaded from www.Manualslib.com manuals search engine

8. CHECK DTC

- With the X-431 scan tool, read ECM DTCs.
- Refer to ″DTC Confirmation Procedure″.

Is DTC P0122 still present?

Yes >> Replace the ECM.

NOTE : The Immobilizer control module must be matched to the new ECM (See ECM Removal & Installation in Section 03 Electronic Engine Controls).

No >> The system is now operating properly.
Reassemble the vehicle and road test to verify the customers complaint is repaired.

Downloaded from www.Manualslib.com manuals search engine

P0123 - Throttle Position Sensor A Circuit High Input

EEC - 2.0L - TPS - 01

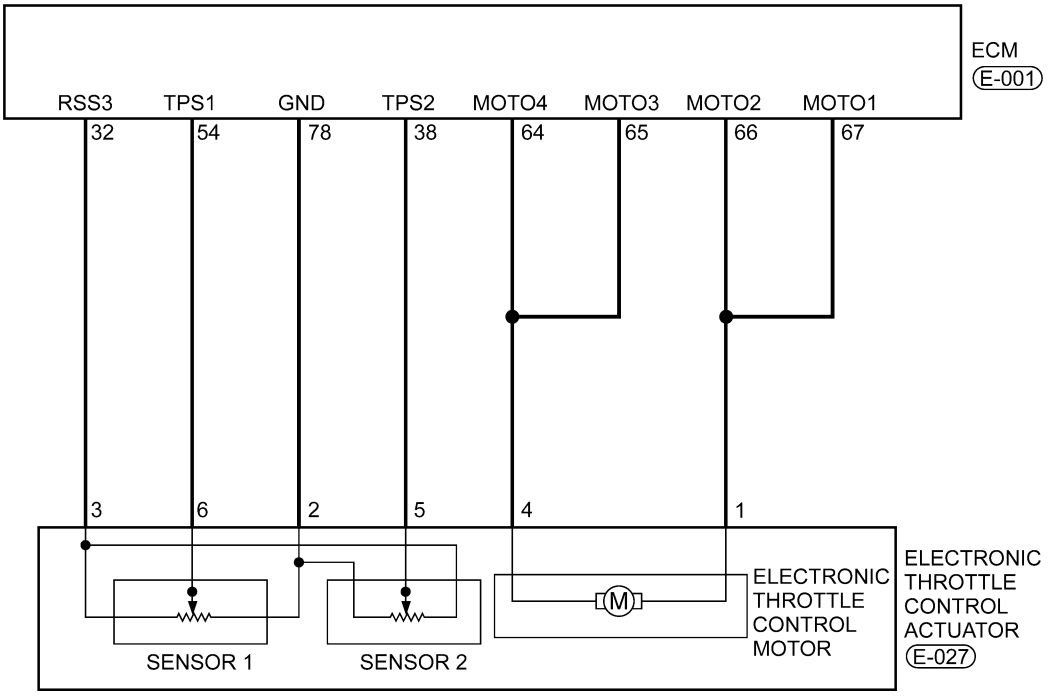

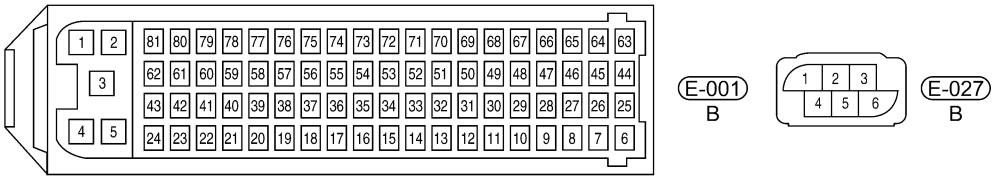

ltsmw030025t

Downloaded from www.Manualslib.com manuals search engine

Check reference values between ECM terminals and ground under the following conditions:

ECM TERMINAL NO.	ITEM	CONDITION		DATA (DC VOLTAGE)
32	Regulated sensor supply 2	Ignition switch: ON	-	Approximately 5 V
38	Electronic throttle control actuator (position sensor)		• Engine stopped • Accelerator pedal: Fully released	4.24 V
			• Engine stopped • Accelerator pedal: Fully depressed	0.72 V
54	Electronic throttle control actuator		• Engine stopped • Accelerator pedal: Fully released	0.74 V
			• Engine stopped • Accelerator pedal: Fully depressed	4.62 V
64	Motor 4		-	12 V or 0 V
65	Motor 3			
66	Motor 2			12 V or 0 V
67	Motor 1			
78	Sensor (GND)			Approximately 0 V

On Board Diagnostic Logic

- Self-diagnosis detection logic.

DTC NO.	DTC DEFINITION	DTC DETECTION CONDITION	DTC SET CONDITION	POSSIBLE CAUSE
P0123	Throttle position sensor A circuit high input	• Ignition switch: ON • Engine: Running	Signal output is above maximum acceptable range for a few seconds continuously.	• TPS or misalignment • Harness or connectors • ECM

DTC Confirmation Procedure:

Before performing the following procedure, confirm that battery voltage is more than 12 V.

- Turn ignition switch off.
- Connect the X-431 scan tool to the Data Link Connector (DLC) - use the most current software available.
- Turn ignition switch on.
- With the scan tool, record and erase stored DTCs in the ECM.
- Start engine and warm it to normal operating temperature, then select view DTC and data stream.
- If the DTC is detected, the DTC condition is current. Go to Diagnostic Procedure - Step 1.
- If the DTC is not detected, the DTC condition is intermittent (See Diagnostic Help and Intermittent DTC Troubleshooting in Section 03 Electronic Engine Controls for more information.

NOTE :
While performing electrical diagnosis & testing, always refer to the electrical schematics for specific circuit and component information.

Downloaded from www.Manualslib.com manuals search engine

Diagnostic Procedure

1. CHECK GROUND CONNECTIONS

- Turn ignition switch off.
- Loosen and retighten ground screws on the body (See Ground Inspection in Section 03 Electronic Engine Controls).
- Inspect ground connections E-207 and E-208 mounting position (See Vehicle Wiring Harness Layout - Engine Room Harness (With 2.0L Engine) in Section 16 Wiring).

Are the ground connections OK?

Yes >> Go to the next step.

No >> Repair or replace ground harness or connections.

2. CHECK TPS SENSOR ELECTRICAL CONNECTOR

- Disconnect the TPS electrical connector (1).
- Inspect the electrical connector for damage.

Is the electrical connector OK?

Yes >> Go to the next step.

No >> Repair or replace the electrical connector as necessary.

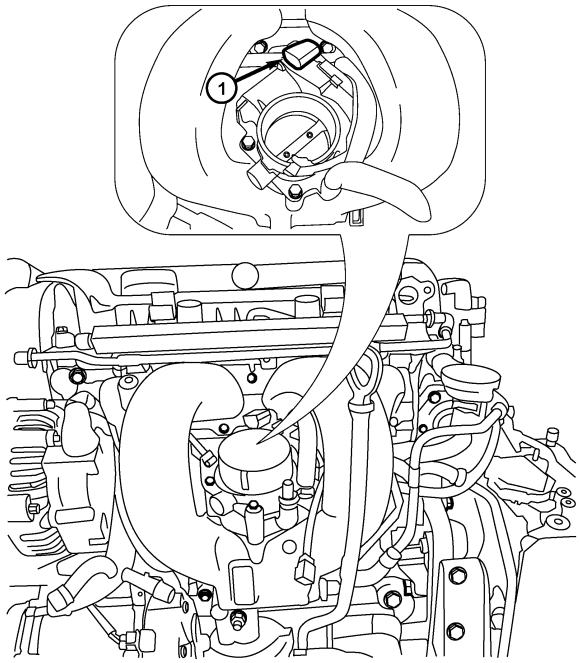

vismd030203

Downloaded from www.Manualslib.com manuals search engine

3. CHECK THE TPS POWER SUPPLY CIRCUIT

- Turn ignition switch on.
- Check supply voltage between TPS terminal 3 and ground in the TPS electrical connector E-027.
- 5 V should exist.

Is the check result normal?

Yes >> Go to the next step.

No >> Repair circuit for a short to power in harness or connectors.
If harness is normal, replace the ECM.

NOTE : The Immobilizer control module must be matched to the new ECM (See ECM Removal & Installation in Section 03 Electronic Engine Controls).

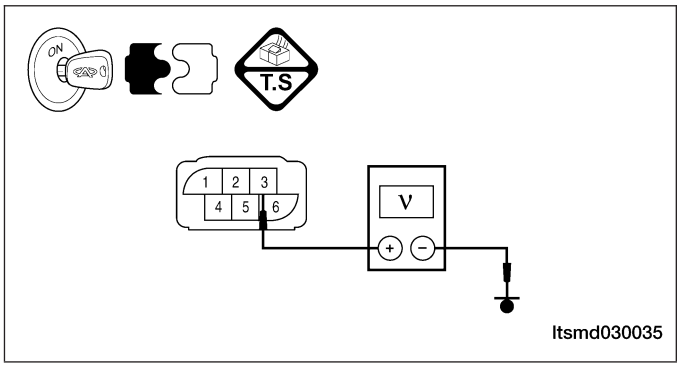

4. CHECK TPS SIGNAL CIRCUIT FOR A SHORT

- Turn ignition switch off.
- Disconnect ECM harness connector.
- Check harness for short to power.

Is the check result normal?

Yes >> Go to step 6.

No >> Go to the next step.

5. CHECK THE TPS GROUND CIRCUIT FOR AN OPEN OR SHORT

- Check harness continuity between following terminals.

TPS TERMINAL	ECM TERMINAL
2	78

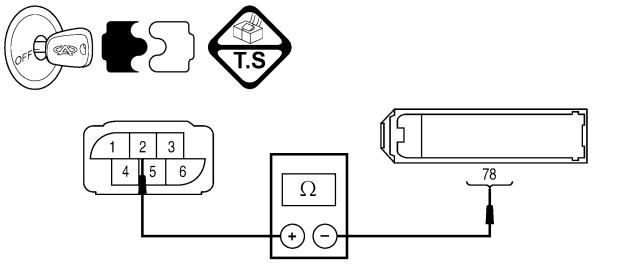

- Continuity should exist.
- Check harness for short to power.

Is the check result normal?

Yes >> Go to the next step.

No >> Repair open circuit or short to power in harness or connectors.

Downloaded from www.Manualslib.com manuals search engine

6. CHECK THE TPS RESISTANCE

- Check resistance between the TPS terminal 2 and terminal 3.
- 2 kΩ ± 20 % (20°C) should exist.

Is the check result normal?

Yes >> Go to the next step.

No >> Replace the TPS.
Perform the TPS self-learning.

7. CHECK THE TPS

- Turn ignition switch off.
- Connect ECM connector.
- Connect TPS connector.
- Turn ignition switch on.
- Check voltage between TPS terminal 3 and ground under the following conditions:

ECM TERMINAL NO.	ITEM	CONDITION		DATA (DC VOLTAGE)
32	Regulated sensor supply 2	Ignition switch: ON	-	Approximately 5 V
38	Electronic throttle control actuator (position sensor)		• Engine stopped • Accelerator pedal: Fully released	4.24 V
			• Engine stopped • Accelerator pedal: Fully depressed	0.72 V
54	Electronic throttle control actuator		• Engine stopped • Accelerator pedal: Fully released	0.74 V
			• Engine stopped • Accelerator pedal: Fully depressed	4.62 V
64	Motor 4		-	12 V or 0 V
65	Motor 3			
66	Motor 2			12 V or 0 V
67	Motor 1			
78	Sensor (GND)			Approximately 0 V

Is the check result normal?

Yes >> Go to the next step.

No >> Replace the TPS.
Perform TPS self-learning.

Downloaded from www.Manualslib.com manuals search engine

8. CHECK DTC

- With the X-431 scan tool, read ECM DTCs.
- Refer to ″DTC Confirmation Procedure″.

Is DTC P0123 still present?

Yes >> Replace the ECM.

NOTE : The Immobilizer control module must be matched to the new ECM (See ECM Removal & Installation in Section 03 Electronic Engine Controls).

No >> The system is now operating properly.
Reassemble the vehicle and road test to verify the customers complaint is repaired.

Downloaded from www.Manualslib.com manuals search engine

P0132 - O_2 Sensor Circuit 1 High Voltage

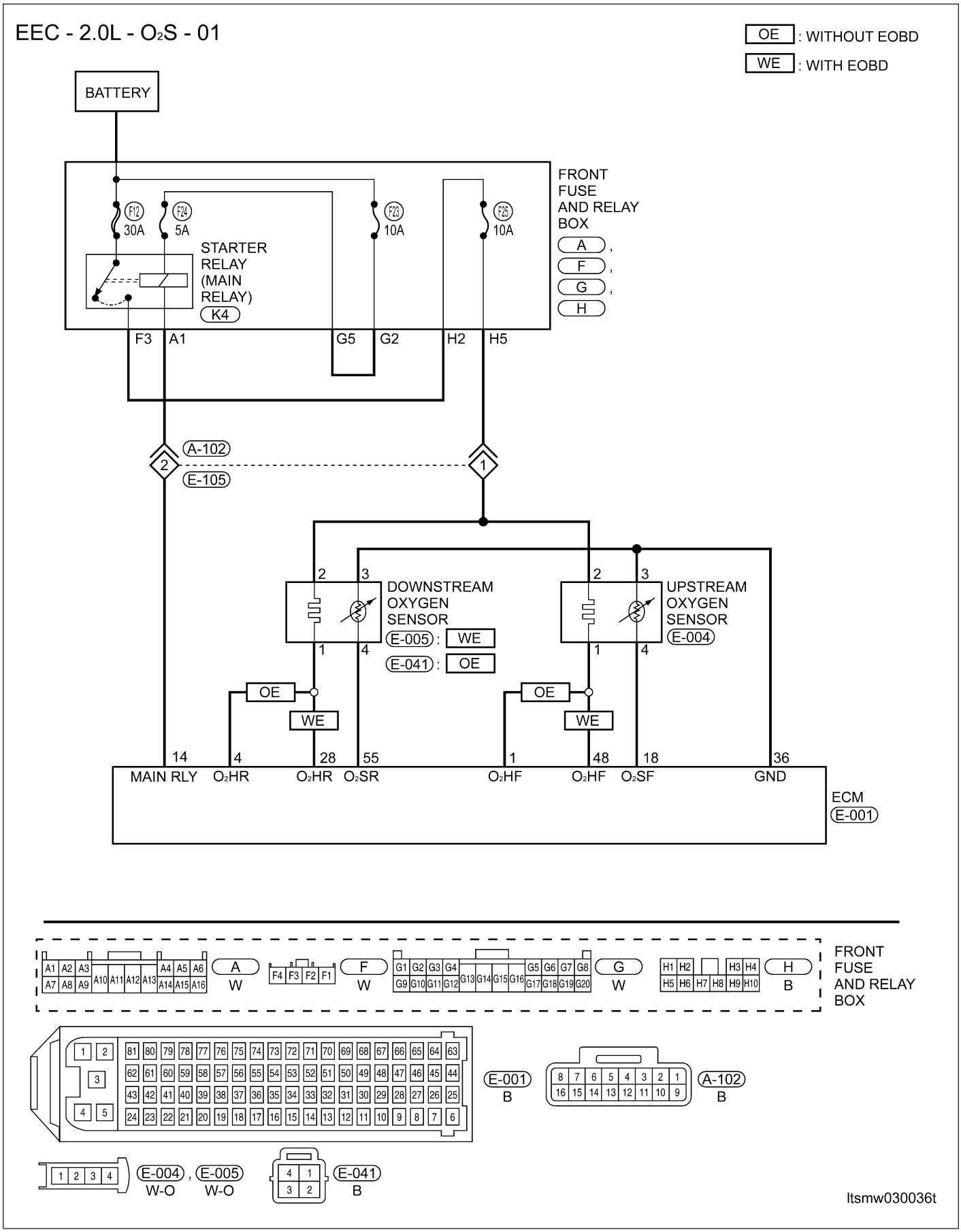

Downloaded from www.Manualslib.com manuals search engine

Check reference values between ECM terminals and ground under the following conditions:

ECM TERMINAL NO.	ITEM	CONDITION	DATA (DC VOLTAGE)
18	Upstream oxygen sensor	• Engine is running • Warm-up condition	Approximately 0.1 - 0.9 V (change 5 - 8 times in 10 seconds periodically)
28	Downstream oxygen sensor heating (with EOBD)	-	-
36	Oxygen sensor signal ground	• Warm-up condition • Idle	Approximately 0 V
48	Upstream oxygen sensor heating (with EOBD)	-	-
55	Downstream oxygen sensor	• Engine is running • Warm-up condition	Approximately 100 mV

On Board Diagnostic Logic

- Self-diagnosis detection logic.

DTC NO.	DTC DEFINITION	DTC DETECTION CONDITION	POSSIBLE CAUSE
P0132	O_2 sensor 1 (upstream) circuit high voltage	Engine is running	• Fuel quality • Oxygen Sensor 1 (upstream) • Harness or connectors • ECM

DTC Confirmation Procedure:

Before performing the following procedure, confirm that battery voltage is more than 12 V.

- Turn ignition switch off.
- Connect the X-431 scan tool to the Data Link Connector (DLC) - use the most current software available.
- Turn ignition switch on.
- With the scan tool, record and erase stored DTCs in the ECM.
- Start engine and warm it up to the normal operating temperature.
- Turn ignition switch off and wait at least 10 seconds.
- Start engine and keep the engine speed 2000 RPM for at least 1 minute.
- Let engine idle for 2 minutes.
- Select view data stream and DTC.
- If DTC is detected, go to Diagnostic Procedure - Step 1.
- If the DTC is not detected, the DTC condition is intermittent (See Diagnosis & Testing Diagnostic Help in Section 03 Electronic Engine Controls).

NOTE :
While performing electrical diagnosis & testing, always refer to the electrical schematics for specific circuit and component information.

Downloaded from www.Manualslib.com manuals search engine

Diagnostic Procedure

1. CHECK GROUND CONNECTIONS

- Turn ignition switch off.
- Loosen and retighten ground screws on the body (See Ground Inspection in Section 03 Electronic Engine Controls).
- Inspect ground connections E-207 and E-208 mounting position (See Vehicle Wiring Harness Layout - Engine Room Harness (With 2.0L Engine) in Section 16 Wiring).

Are the ground connections OK?

Yes >> Go to the next step.

No >> Repair or replace ground harness or connections.

2. CHECK O_2 SENSOR ELECTRICAL CONNECTOR

- Disconnect the O_2 sensor (1) electrical connector.
- Inspect the electrical connector for damage.

Is the electrical connector OK?

Yes >> Go to the next step.

No >> Repair or replace the electrical connector as necessary.

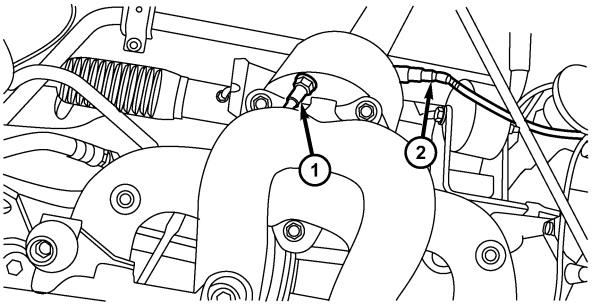

besm030017

3. CHECK O_2 SENSOR GROUND CIRCUIT

- Disconnect ECM harness connector.
- Check harness continuity between ECM terminal 18 and O_2 sensor terminal 4.
- Continuity should exist.
- Check harness for an open and short to power supply circuit.

Is the check result normal?

Yes >> Go to the next step.

No >> Repair or replace circuit for an open or short to power in harness or connectors.

4. CHECK O_2 SENSOR INPUT SIGNAL CIRCUIT FOR AN OPEN AND SHORT

- Check harness continuity between ECM terminal and O_2 sensor terminal as follows.

COMPONENT	ECM	UPSTREAM O_2 SENSOR
TERMINAL	18	4

Downloaded from www.Manualslib.com manuals search engine

- Continuity should exist.
- Check harness short to power supply circuit.

Is the check result normal?

Yes >> Go to the next step.

No >> Repair or replace circuit for an open or short to power in harness or connectors.

5. CHECK O_2 SENSOR

- Connect O_2 sensor connector.
- Connect ECM connector.
- If with the X-431, refer to data stream value.
- If without the X-431, as following procedure:
  - Start engine and warm it up to normal operating temperature 350°C.
  - Turn ignition switch off.
  - Start engine and keep the engine speed between 3,500 and 4,000 RPM for at least 1 minute.
  - Let engine idle for 1 minute.
  - Set digital multimeter probes between ECM terminal 4 and ground.

CHECK ITEM	CHECK CONTENT		NORMAL VALUE
Oxygen sensor	• Warm-up condition • Become lean while decelerate	Decelerate from 4,000 RPM suddenly	Below 100 mV
	• Warm-up condition • Become rich while accelerate	Accelerate suddenly	Approximately 600 - 900 mV
	• Warm-up condition • Check with O_2 sensor signal	Idle	100 - 900 mV
		2500 RPM	Approximately 600 - 900 mV

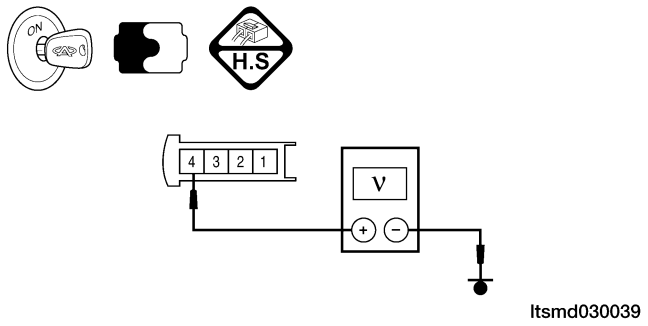

Is the check result normal?

Yes >> Go to the next step.

No >> Replace O_2 sensor.

6. CHECK DTC

- With the X-431 scan tool, read ECM DTCs.
- Refer to ″DTC Confirmation Procedure″.

Is DTC P0132 still present?

Yes >> Replace the ECM.

NOTE : The Immobilizer control module must be matched to the new ECM (See ECM Removal & Installation in Section 03 Electronic Engine Controls).

No >> The system is now operating properly.
Reassemble the vehicle and road test to verify the customers complaint is repaired.

Downloaded from www.Manualslib.com manuals search engine

P0171 - Fuel Trim System Too Lean

EEC - 2.0L - MAF - 01

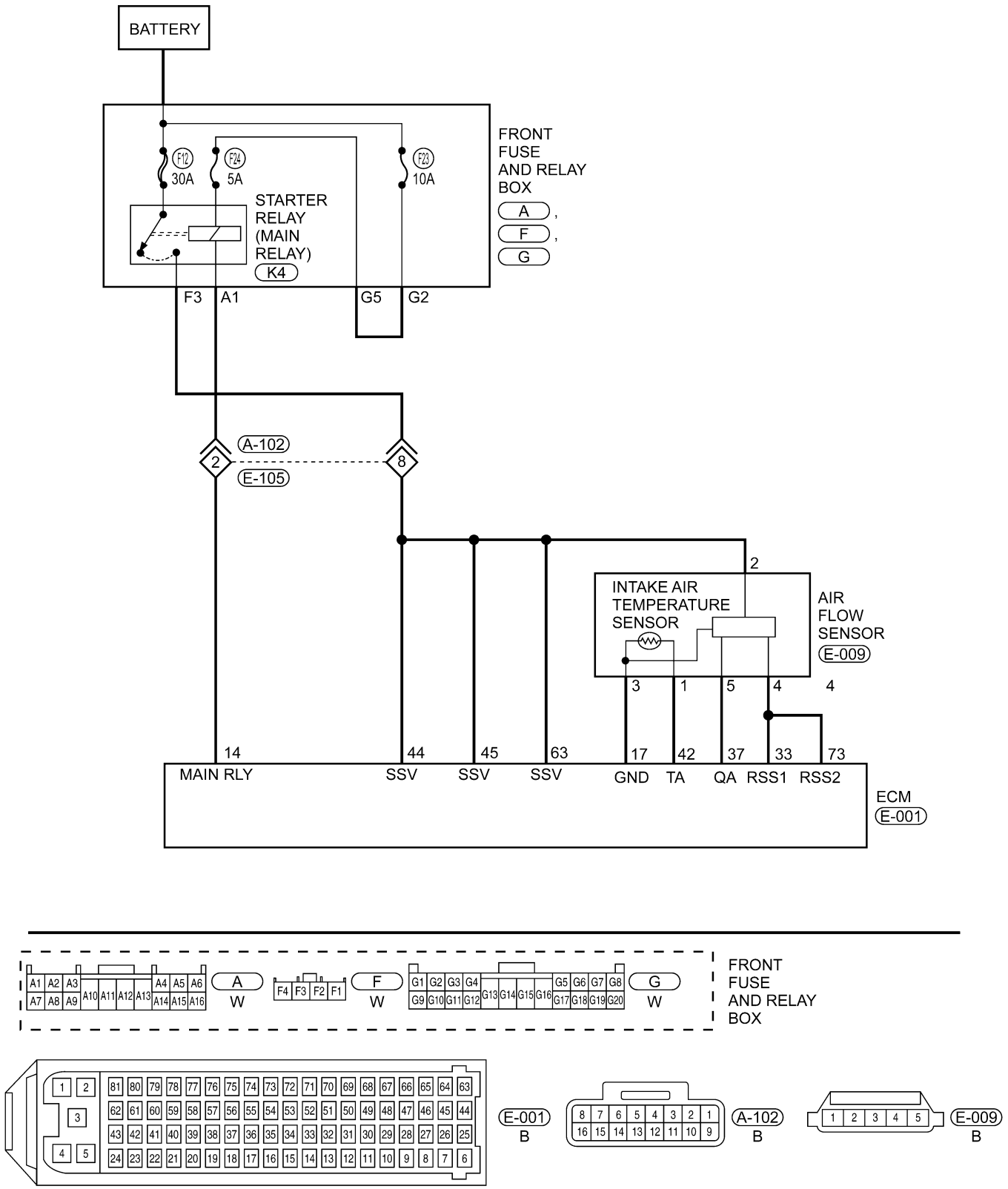

ltsmw030033t

Downloaded from www.Manualslib.com manuals search engine

EEC - 2.0L - INJ - 01

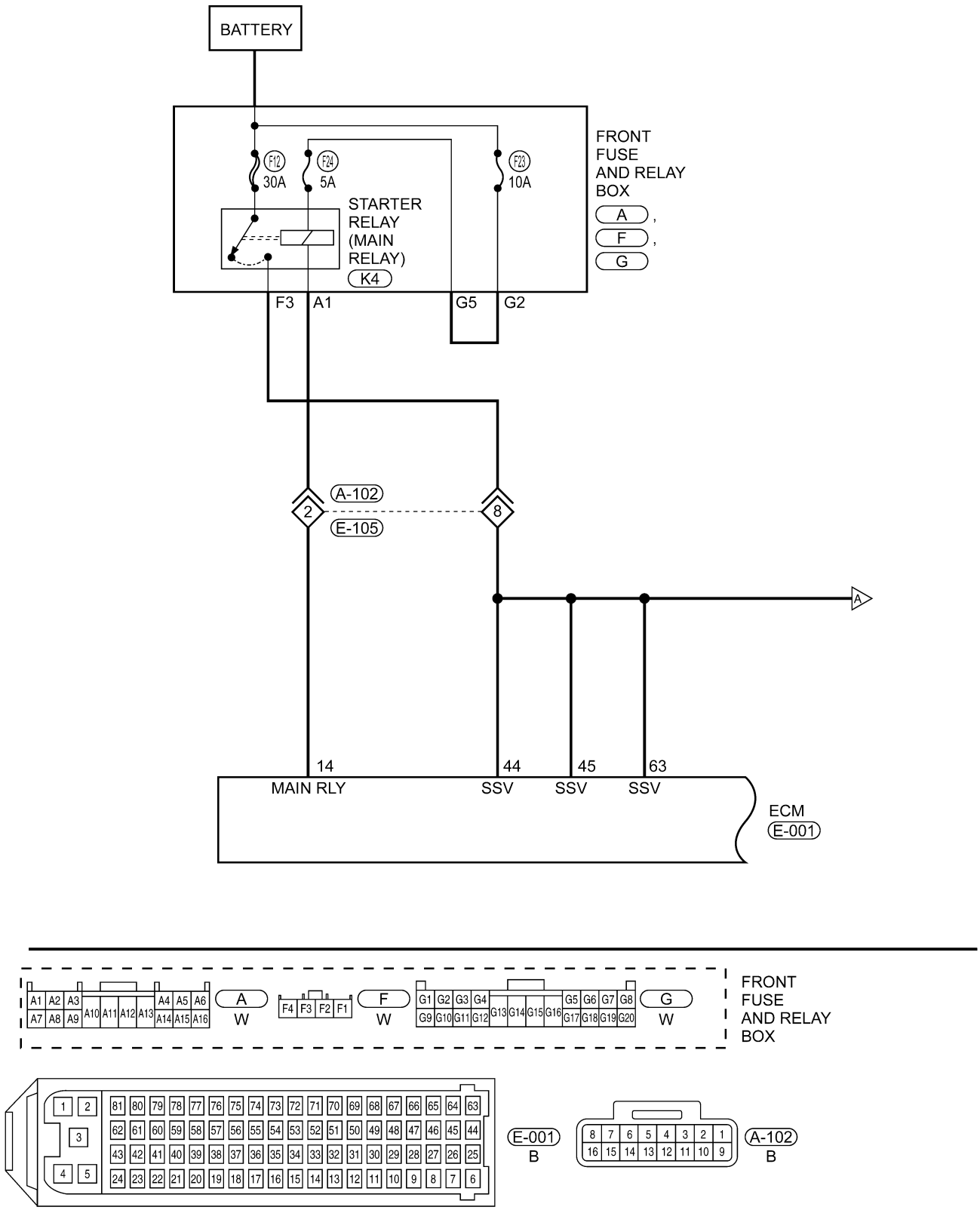

ltsmw030029t

Downloaded from www.Manualslib.com manuals search engine

EEC - 2.0L - INJ - 02

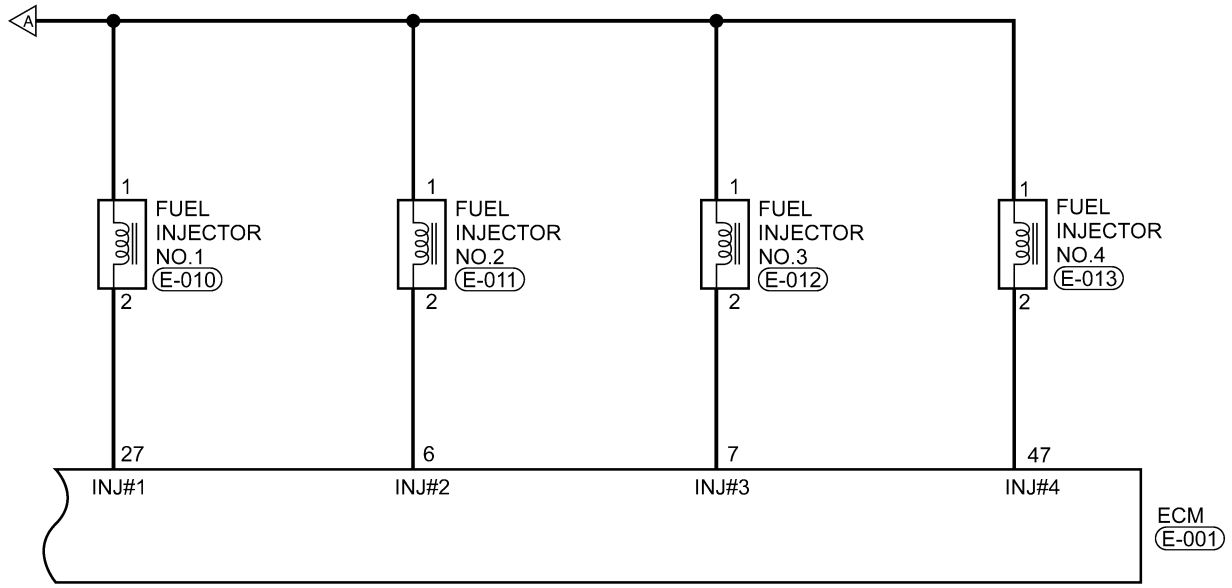

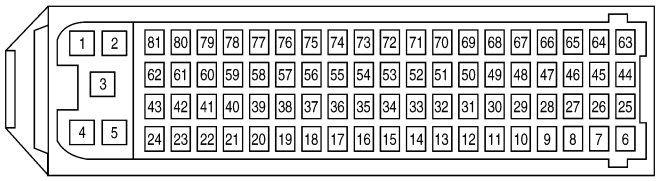

E-001
B

E-010, E-011, E-012, E-013
B B B B

ltsmw030030t

Downloaded from www.Manualslib.com manuals search engine

Check reference values between ECM terminals and ground under the following conditions:

ECM TERMINAL NO.	ITEM	CONDITION	DATA (AVERAGE DC VOLTAGE)
6	Injector 2	• Engine is running • Warm-up condition • Idle • Accelerate suddenly	Voltage: 11 - 14 V
7	Injector 3		
27	Injector 1		
47	Injector 4		

ECM TERMINAL NO.	ITEM	CONDITION	DATA (AVERAGE DC VOLTAGE)
17	Sensor (GND)	• Engine is running • Warm-up condition: 78°C • Idle: 795 RPM • IAT: 36°C • IAT signal: 1.88 V	0 V
33	Regulated sensor supply 1		Approximately 5 V
37	Air flow sensor		Approximately 322 kg/h
			Approximately 1.39 V

On Board Diagnostic Logic

- Self-diagnosis detection logic.

DTC NO.	DTC DEFINITION	DTC DETECTION CONDITION	DTC SET CONDITION	POSSIBLE CAUSE
P0171	Fuel trim system too lean	Engine is running	The amount of mixture ratio compensation is too large (The mixture ratio is too lean).	• Intake air leaks • Air flow sensor • Fuel injector • Exhaust gas leaks • Incorrect fuel pressure • lack of fuel • Incorrect PCV hose connection • Upstream O_2 sensor • ECM

DTC Confirmation Procedure:

Before performing the following procedure, confirm that battery voltage is more than 12 V.

- Turn ignition switch off.
- Connect the X-431 scan tool to the Data Link Connector (DLC) - use the most current software available.
- Turn ignition switch on.
- With the scan tool, record and erase stored DTCs in the ECM.
- Start engine and warm it to normal operating temperature, then select view DTC and data stream.
- If the DTC is detected, the DTC condition is current. Go to Diagnostic Procedure - Step 1.
- If the DTC is not detected, the DTC condition is intermittent (See Diagnostic Help and Intermittent DTC Troubleshooting in Section 03 Electronic Engine Controls for more information.

NOTE :

While performing electrical diagnosis & testing, always refer to the electrical schematics for specific circuit and component information.

Downloaded from www.Manualslib.com manuals search engine

Diagnostic Procedure

1. CHECK EXHAUST GAS LEAK

- Start engine and run it at idle.
- Listen for exhaust gas leak before the three way catalyst.

Is the check result normal?

Yes >> Go to the next step.

No >> Repair or replace.

2. CHECK FOR INTAKE AIR LEAK

- Turn ignition switch on.
- Listen for intake air leak after the air flow sensor.
- Check PCV hose connector.

Is the check result normal?

Yes >> Go to the next step.

No >> Repair or replace.

3. CHECK ECM CONTROL SIGNAL IN DATA STREAM

- With the X-431, select view data stream.

MONITOR ITEM	CONDITION		DATA
Injector pulse	• Engine: warm up • Shift: P or N • Air conditioning: off • No load	Idle	Approximately 2.5 ms

Is the check result normal?

Yes >> Go to step 7.

No >> Go to the next step.

4. CHECK UPSTREAM O_2 SENSOR ELECTRICAL CONNECTOR

- Turn ignition switch off.
- Disconnect the upstream O_2 sensor (1) electrical connector.
- Inspect the electrical connector for damage.

Is the electrical connector OK?

Yes >> Go to the next step.

No >> Repair or replace the electrical connector as necessary.

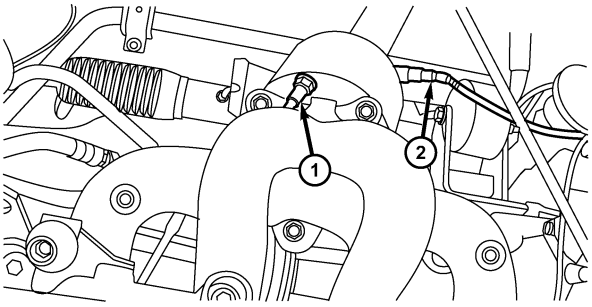

besm030017

Downloaded from www.Manualslib.com manuals search engine

5. CHECK UPSTREAM O_2 SENSOR SIGNAL CIRCUIT

- Disconnect ECM harness connector.
- Check harness continuity between the following terminals.

UPSTREAM O_2 SENSOR	ECM TERMINAL	O_2 SENSOR TERMINAL
O_2 sensor 1	36	3
	18	4

- Continuity should exist.
- Also check harness for short to ground.

Is the check result normal?

Yes >> Go to the next step.

No >> Repair or replace circuit for an open or short to ground in harness or connectors.

6. CHECK AIR FLOW SENSOR SIGNAL

- Check air flow in data stream.

TERMINAL NO.	ITEM	CONDITION	DATA (AVERAGE DC VOLTAGE)
37	Air flow sensor	• Engine is running • ECT: 78°C • Idle: 795 RPM • IAT: 36°C • IAT signal: 1.88 V	Approximately 322 kg/h
			Approximately 1.39 V

Is the check result normal?

Yes >> Go to the next step.

No >> Check connectors for rusted terminals or loose connectors in the air flow sensor circuit or ground.

Downloaded from www.Manualslib.com manuals search engine

7. CHECK FUEL PRESSURE

- Release fuel pressure to zero.
- Install fuel pressure gauge (2) and check fuel pressure.

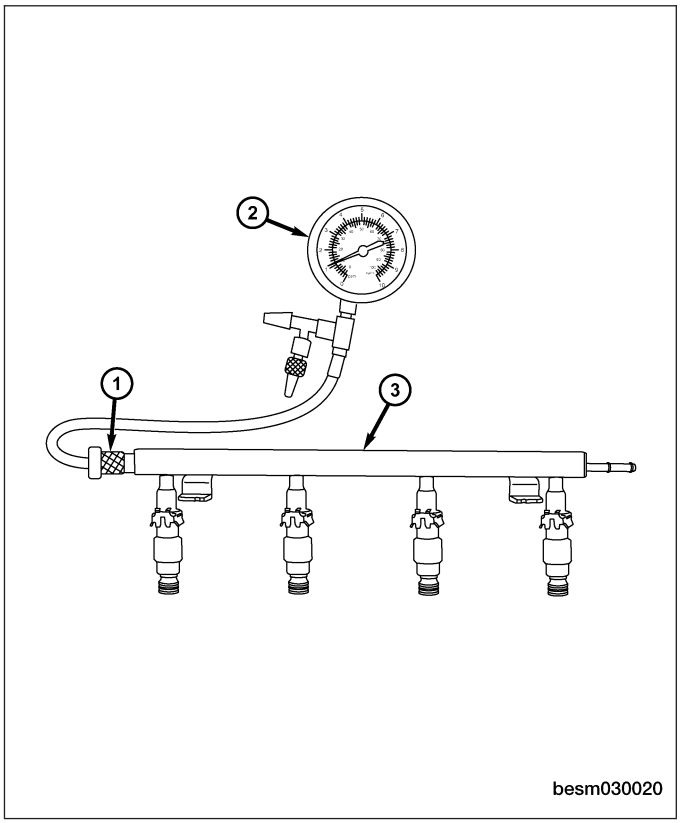

- Observe the following fuel pressures when testing (See Fuel Pressure Test in Section 04 Fuel Delivery).

FUEL PRESSURES	
Key On	400 kPa (4.0 bar)
Key Off	380 kPa (3.8 bar) in 10 minutes
Engine Idle	400 kPa (4.0 bar) - 420 kPa (4.2 bar)

Is the check result normal?

Yes >> Go to step 9.

No >> Go to the next step.

8. DETECT MALFUNCTIONING PART

- Check the following:
  - Fuel pump and circuit.
  - Fuel pressure regulator.
  - Fuel lines.
  - Fuel filter for clogging.

Is the check result normal?

Yes >> If with the X-431, go to the next step.
If without the X-431, go to step 10.

No >> Repair or Replace malfunctioning part.

Downloaded from www.Manualslib.com manuals search engine

9. PERFORM ACTUATE TEST FUNCTION

- Start engine.
- Select "ACTIVE TEST" menu.
- Perform injector active test.
- Make sure that each test produces a momentary engine speed drop.

Is the check result normal?

Yes >> Go to step 12.

No >> Go to the next step.

10. CHECK FUNCTION OF INJECTOR

- Listen to each injector operating sound.
- Operating sound should exist.

Is the check result normal?

Yes >> Go to step 12.

No >> Go to the next step.

Downloaded from www.Manualslib.com manuals search engine

11. CHECK INJECTOR POWER SUPPLY CIRCUIT AND CONTROL CIRCUIT

- Turn ignition switch off.
- Disconnect injector harness connector (1).

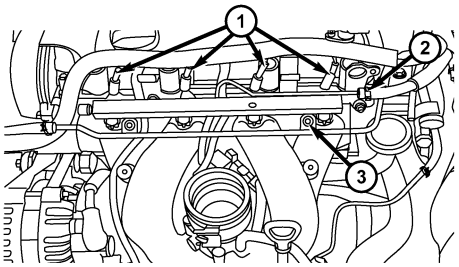

besm040006

- Turn ignition switch on.
- Check injector supply voltage between sensor terminal and ground in the electrical connector.

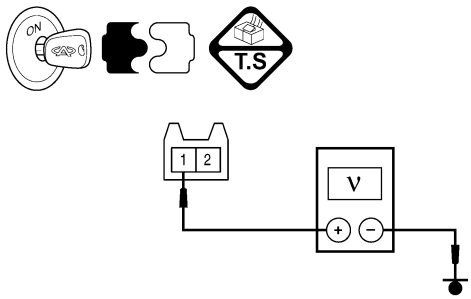

ltsmd030024

- Battery voltage should exist.
- Turn ignition switch off
- Disconnect ECM harness connector.
- Check harness continuity between following terminals.

INJECTOR NO.	ECM TERMINAL	INJECTOR TERMINAL
1	27	2
2	6	2
3	7	2
4	47	2

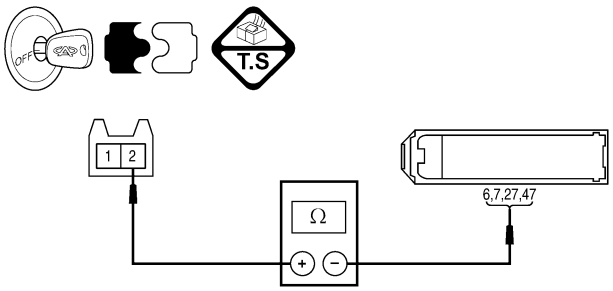

ltsmd030025

- Continuity should exist.
- Check harness for short to power.

Is the check result normal?

Yes >> Go to the next step.

No >> Repair or replace circuit for an open or short to power or short to ground in harness or connectors.

Downloaded from www.Manualslib.com manuals search engine

12. CHECK INJECTOR RESISTANCE

- Disconnect injector harness connectors (See Fuel Pressure Test in Section 04 Fuel Delivery).
- Check the resistance of the injectors.

INJECTOR NO.	INJECTOR TERMINAL	RESISTANCE (APPROXIMATELY) Ω (20°C)
1	1 & 2	16
2	1 & 2	
3	1 & 2	
4	1 & 2	

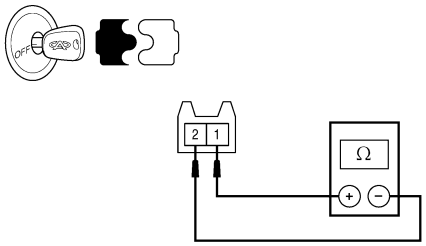

ltsmd030027

Is the check result normal?

Yes >> Go to the next step.

No >> Replace injector.
Go to step 14.

13. CHECK INJECTOR

- Confirm that the engine is cooled down and there are no fire hazards near the vehicle.
- Remove fuel delivery rail with injectors (See Fuel Injector Rail Removal & Installation 1.6L/1.8L/2.0L in Section 04 Fuel Delivery).

NOTE :
Be careful not to drop the fuel injectors when removing the fuel delivery rail.
- Keep fuel hose and all injectors connected to injector rail.
- Disconnect all ignition coil harness connectors.
- Prepare pans or saucers under each injector.
- Crank engine for about 3 seconds.
- Fuel should be sprayed evenly for each injector.

Is the check result normal?

Yes >> Go to next step.

No >> Clean or replace the defective fuel injector.

14. CHECK DTC

- With the X-431 scan tool, read ECM DTCs.
- See DTC Confirmation Procedure.

Is DTC P0171 still present?

Yes >> Replace the ECM.

NOTE : The Immobilizer control module must be matched to the new ECM (See ECM Removal & Installation in Section 03 Electronic Engine Controls).

No >> The system is now operating properly.
Reassemble the vehicle and road test to verify the customers complaint is repaired.

Downloaded from www.Manualslib.com manuals search engine

P0172 - Fuel Trim System Too Rich

EEC - 2.0L - MAF - 01

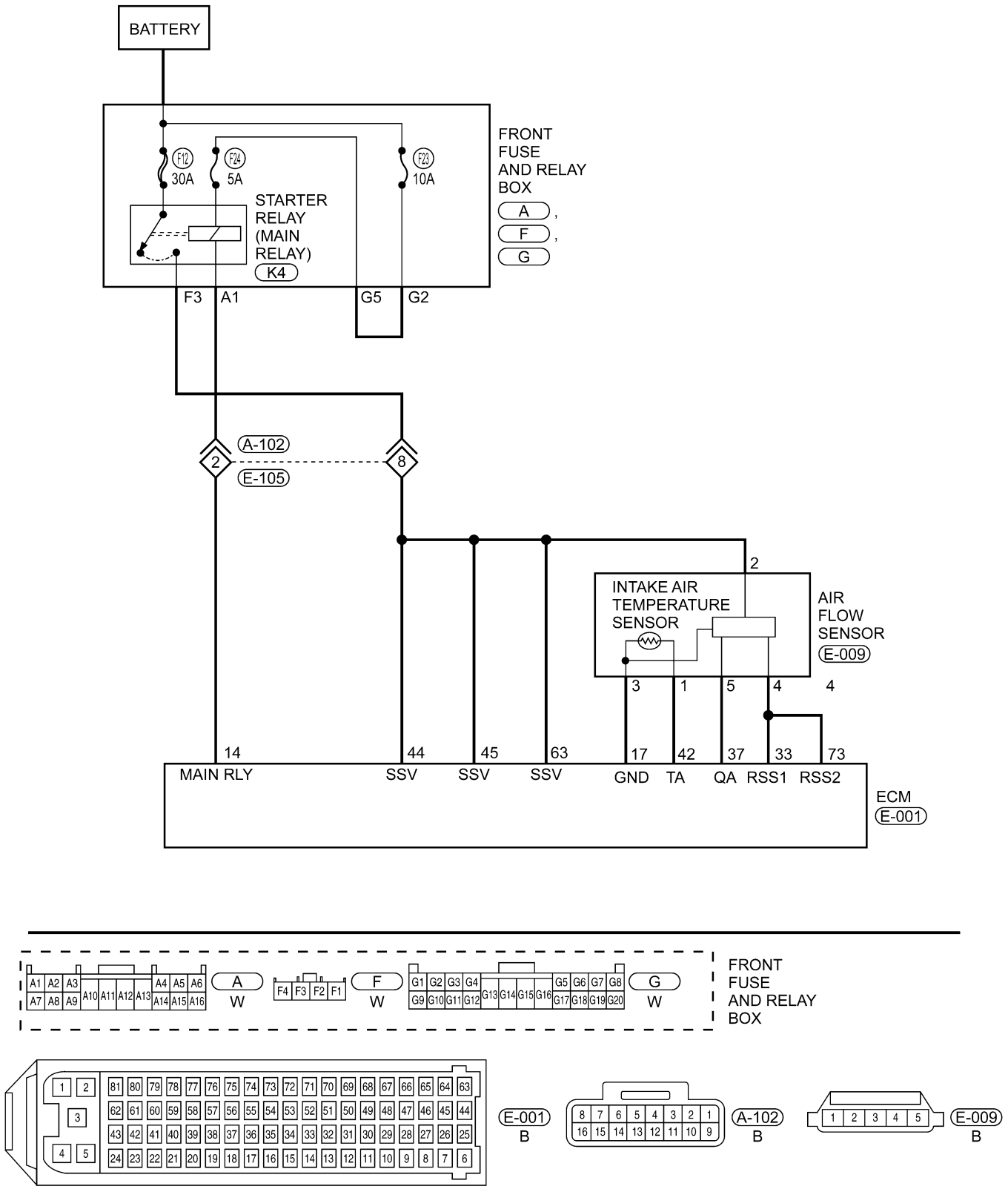

ltsmw030033t

Downloaded from www.Manualslib.com manuals search engine

EEC - 2.0L - INJ - 01

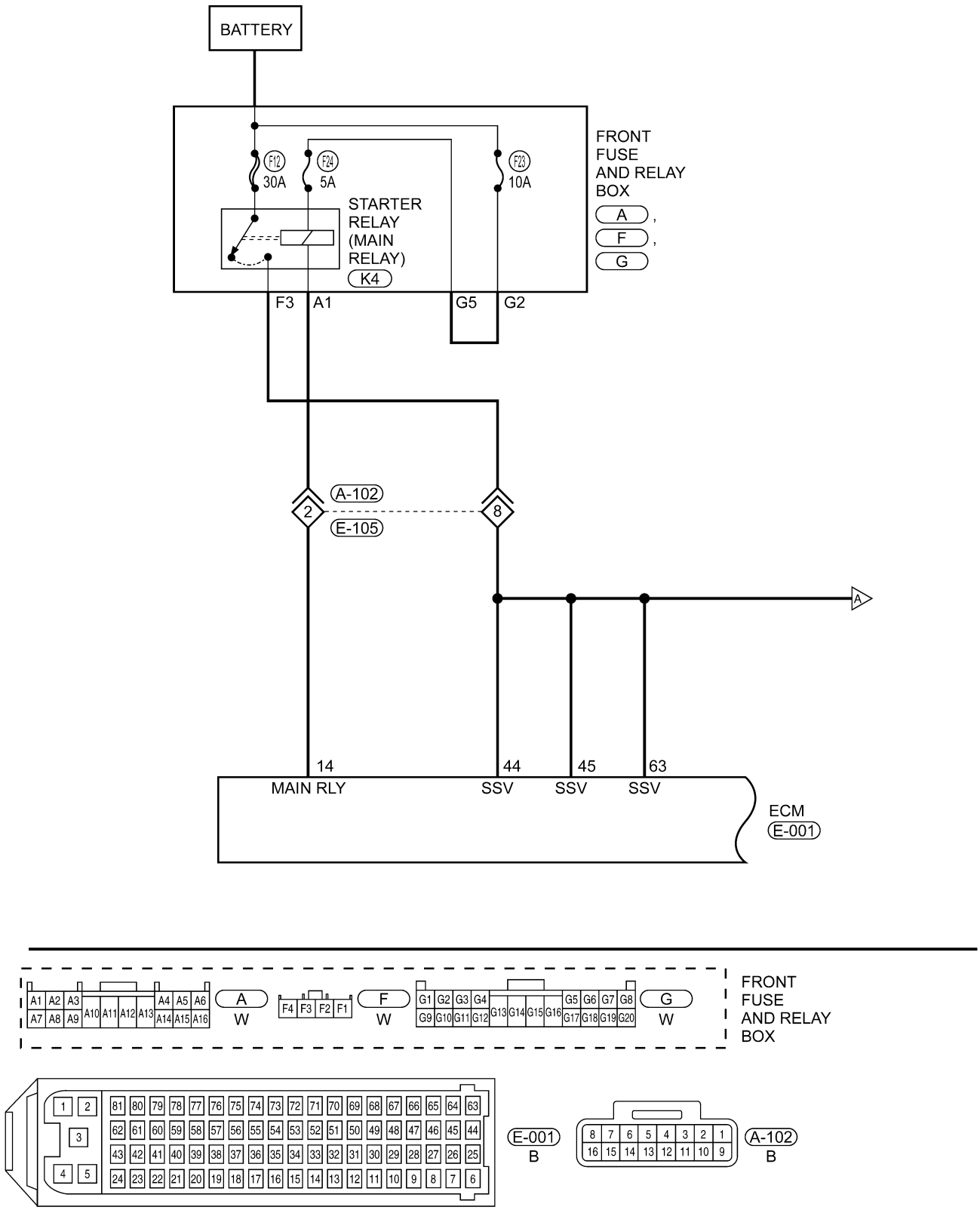

ltsmw030029t

Downloaded from www.Manualslib.com manuals search engine

EEC - 2.0L - INJ - 02

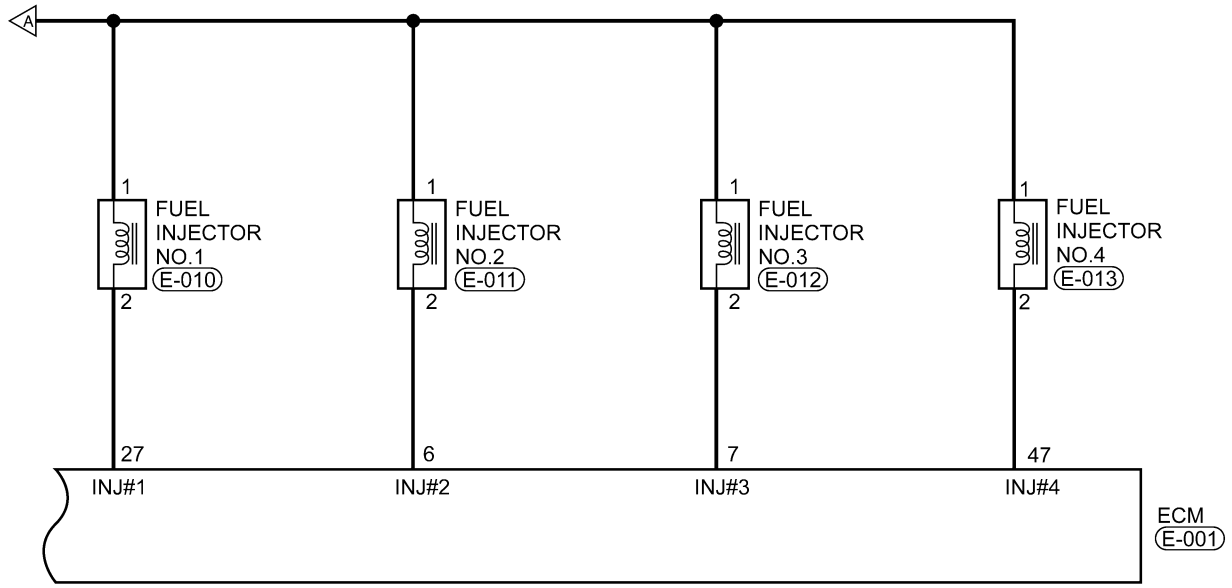

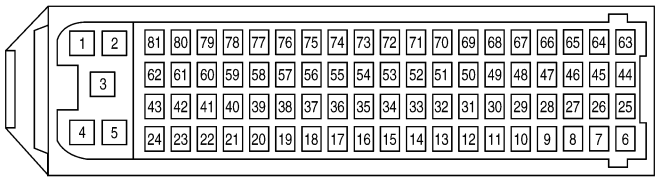

E-001
B

E-010, E-011, E-012, E-013
B B B B

ltsmw030030t

Downloaded from www.Manualslib.com manuals search engine

Check reference values between ECM terminals and ground under the following conditions:

ECM TERMINAL NO.	ITEM	CONDITION	DATA (AVERAGE DC VOLTAGE)
6	Injector 2	• Engine is running • Warm-up condition • Idle • Accelerate suddenly	Voltage: 11 - 14 V
7	Injector 3		
27	Injector 1		
47	Injector 4		

ECM TERMINAL NO.	ITEM	CONDITION	DATA
17	Sensor (GND)	• Engine is running • ECT: 78°C • Idle: 795 RPM • IAT: 36°C • IAT signal: 1.88 V	0 V
33	Regulated sensor supply 1		5 V
37	Air flow sensor		322 kg/h
			1.39 V

On Board Diagnostic Logic

- Self-diagnosis detection logic.

DTC NUMBER	DTC DEFINITION	DTC DETECTION CONDITION	DTC SET CONDITION	POSSIBLE CAUSE
P0172	Fuel trim system too rich	Engine is running	The amount of mixture ratio compensation is too large (The mixture ratio is too rich).	• MAF sensor • Fuel injector • Exhaust gas leaks • Incorrect fuel pressure • Upstream O_2 sensor • ECM

DTC Confirmation Procedure:

Before performing the following procedure, confirm that battery voltage is more than 12 V.

- Turn ignition switch off.
- Connect the X-431 scan tool to the Data Link Connector (DLC) - use the most current software available.
- Turn ignition switch on.
- With the scan tool, record and erase stored DTCs in the ECM.
- Start engine and warm it to normal operating temperature, then select view DTC and data stream.
- If the DTC is detected, the DTC condition is current. Go to Diagnostic Procedure - Step 1.
- If the DTC is not detected, the DTC condition is intermittent (See Diagnostic Help and Intermittent DTC Troubleshooting in Section 03 Electronic Engine Controls for more information.

NOTE :

While performing electrical diagnosis & testing, always refer to the electrical schematics for specific circuit and component information.

Downloaded from www.Manualslib.com manuals search engine

Diagnostic Procedure

1. CHECK EXHAUST GAS LEAK

- Start engine and run it at idle.
- Listen exhaust gas leak before three way catalyst.

Is the check result normal?

Yes >> Go to the next step.

No >> Repair or replace.

2. CHECK ECM CONTROL SIGNAL IN DATA STREAM

- With the X-431, select view data stream.

REFERENCE DATA			
MONITOR ITEM	**CONDITION**		**DATA**
Injector pulse	• Engine: warm up • Shift: P or N • Air condition: Off • No load	Idle	Approximately 2.5 ms

Is the check result normal?

Yes >> Go to step 5.

No >> Go to the next step.

3. CHECK UPSTREAM O_2 SENSOR ELECTRICAL CONNECTOR

- Turn ignition switch off.
- Disconnect the upstream O_2 sensor (1) electrical connector.
- Inspect the electrical connector for damage.

Is the electrical connector OK?

Yes >> Go to the next step.

No >> Repair or replace the electrical connector as necessary.

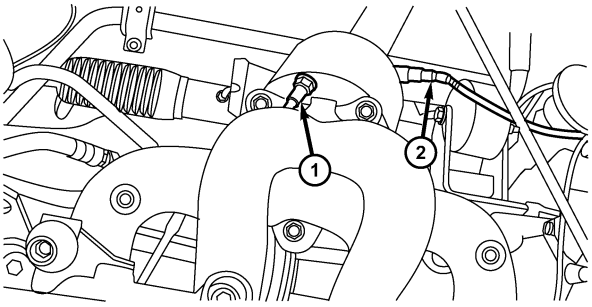

besm030017

4. CHECK UPSTREAM O_2 SENSOR SIGNAL CIRCUIT

- Disconnect ECM harness connector.
- Check harness continuity between the following terminals.

UPSTREAM O_2 SENSOR	ECM TERMINAL	O_2 SENSOR TERMINAL
O_2 sensor 1	36	3
	18	4

Downloaded from www.Manualslib.com manuals search engine

- Continuity should exist.
- Also check harness for short to power.

Is the check result normal?

Yes >> Go to the next step.

No >> Repair or replace the circuit for an open or short to power in harness or connectors.

5. CHECK FUEL PRESSURE

- Release fuel pressure to zero.
- Install fuel pressure gauge (2) and check fuel pressure.

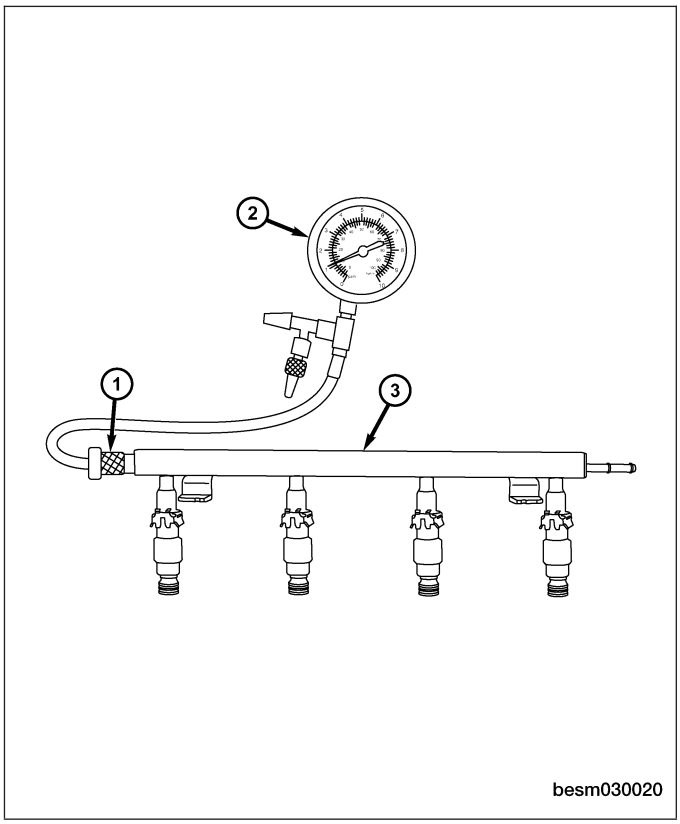

- Observe the following fuel pressures when testing (See Fuel Pressure Test in Section 04 Fuel Delivery)

FUEL PRESSURES	
Key On	400 kPa (4 bar)
Key Off	380 kPa (3.8 bar) in 10 minutes
Engine Idle	400 kPa (4.0 bar) - 420 kPa (4.2 bar)

Is the check result normal?

Yes >> Go to step 7.

No >> Go to the next step.

Downloaded from www.Manualslib.com manuals search engine

6. DETECT MALFUNCTIONING PART

- Check the following:
  - Fuel pump and circuit
  - Fuel pressure regulator

Is the check result normal?

Yes >> Go to the next step.

No >> Repair or replace malfunctioning part.

7. CHECK MAF SENSOR

- Turn ignition switch off.
- Install all removed parts.
- Check air flow in data stream.

MAF SENSOR SIGNAL			
TERMINAL NO.	ITEM	CONDITION	DATA
37	Air flow sensor	• Engine is running • ECT: 78°C • Idle: 795 RPM • IAT: 36°C • IAT signal: 1.88 V	322 kg/h
			1.39 V

Is the check result normal?

Yes >> If with the X-431, go to the next step.
If without the X-431, go to step 9.

No >> Check connectors for damaged or air flow signal circuit for short to power.

8. PERFORM ACTIVE TEST FUNCTION

- Start engine.
- Select "ACTIVE TEST" menu.
- Perform injector active test.
- Make sure that each test produces a momentary engine speed drop.

Is the check result normal?

Yes >> Go to step 11.

No >> Go to the next step.

9. CHECK FUNCTION OF INJECTOR

- Listen to each injector operating sound.
- Operating sound should exist.

Is the check result normal?

Yes >> Go to step 11.

No >> Go to the next step.

Downloaded from www.Manualslib.com manuals search engine

10. CHECK INJECTOR CONTROL CIRCUIT

- Turn ignition switch off.
- Disconnect injector harness connector (1).

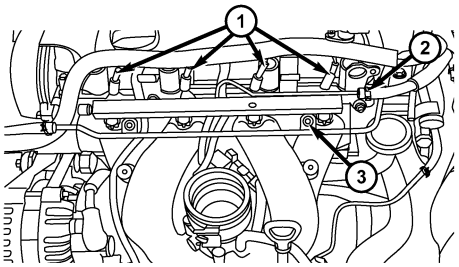

besm040006

- Disconnect ECM harness connector.
- check harness for short to ground between following terminals.
- Continuity should not exist.

INJECTOR NO.	ECM TERMINAL	INJECTOR TERMINAL
1	27	2
2	6	2
3	7	2
4	47	2

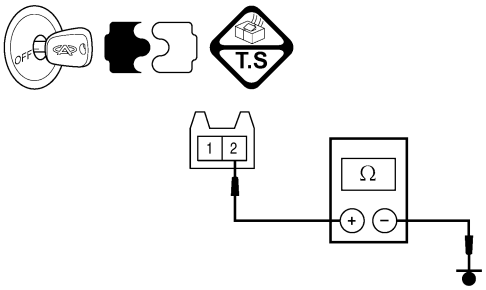

ltsmd030040

Is the check result normal?

Yes >> Go to the next step.

No >> Repair or replace the circuit for short to ground in harness or connectors.

11. CHECK INJECTOR RESISTANCE

- Disconnect injector harness connectors (See Fuel Pressure Test in Section 04 Fuel Delivery).
- Check the fuel injector resistance as shown in the following:

INJECTOR RESISTANCE		
INJECTOR NO.	INJECTOR TERMINAL	RESISTANCE (APPROXIMATELY) Ω (20°C)
1	1 & 2	11 - 16
2	1 & 2	
3	1 & 2	
4	1 & 2	

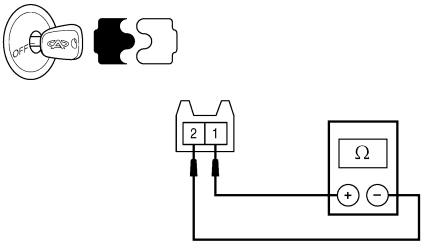

ltsmd030027

Downloaded from www.Manualslib.com manuals search engine

Is the check result normal?

Yes >> Go to the next step.

No >> Replace injector.
Go to step 14.

12. CHECK INJECTOR

WARNING!

Confirm that the engine is cooled down and there are no fire hazards near the vehicle.

- Remove fuel delivery rail with injectors (See Fuel Injector Rail Removal & Installation 1.6L/1.8L/2.0L in Section 04 Fuel Delivery).

NOTE :
Be careful not to drop the fuel injectors when removing the fuel delivery rail.
- Keep fuel hose and all injectors connected to injector rail.
- Disconnect all injector harness connectors.
- Disconnect all ignition coil harness connectors.
- Prepare pans or saucers under each injector.
- Crank engine for about 3 seconds.
- Make sure fuel does not drip from injector.

Is the check result normal?

Yes >> Go to next step.

No >> Replace any leaking injectors as necessary. Always replace the O-ring seal when replacing the fuel injector .

13. CHECK DTC

- With the X-431 scan tool, read ECM DTCs.
- Refer to ″DTC Confirmation Procedure″.

Is DTC P0172 still present?

Yes >> Replace the ECM.

NOTE : The Immobilizer control module must be matched to the new ECM (See ECM Removal & Installation in Section 03 Electronic Engine Controls).

No >> The system is now operating properly.
Reassemble the vehicle and road test to verify the customers complaint is repaired.

Downloaded from www.Manualslib.com manuals search engine

P0201 - Cylinder 1 - Injector Circuit
P0202 - Cylinder 2 - Injector Circuit
P0203 - Cylinder 3 - Injector Circuit
P0204 - Cylinder 4 - Injector Circuit

EEC - 2.0L - INJ - 01

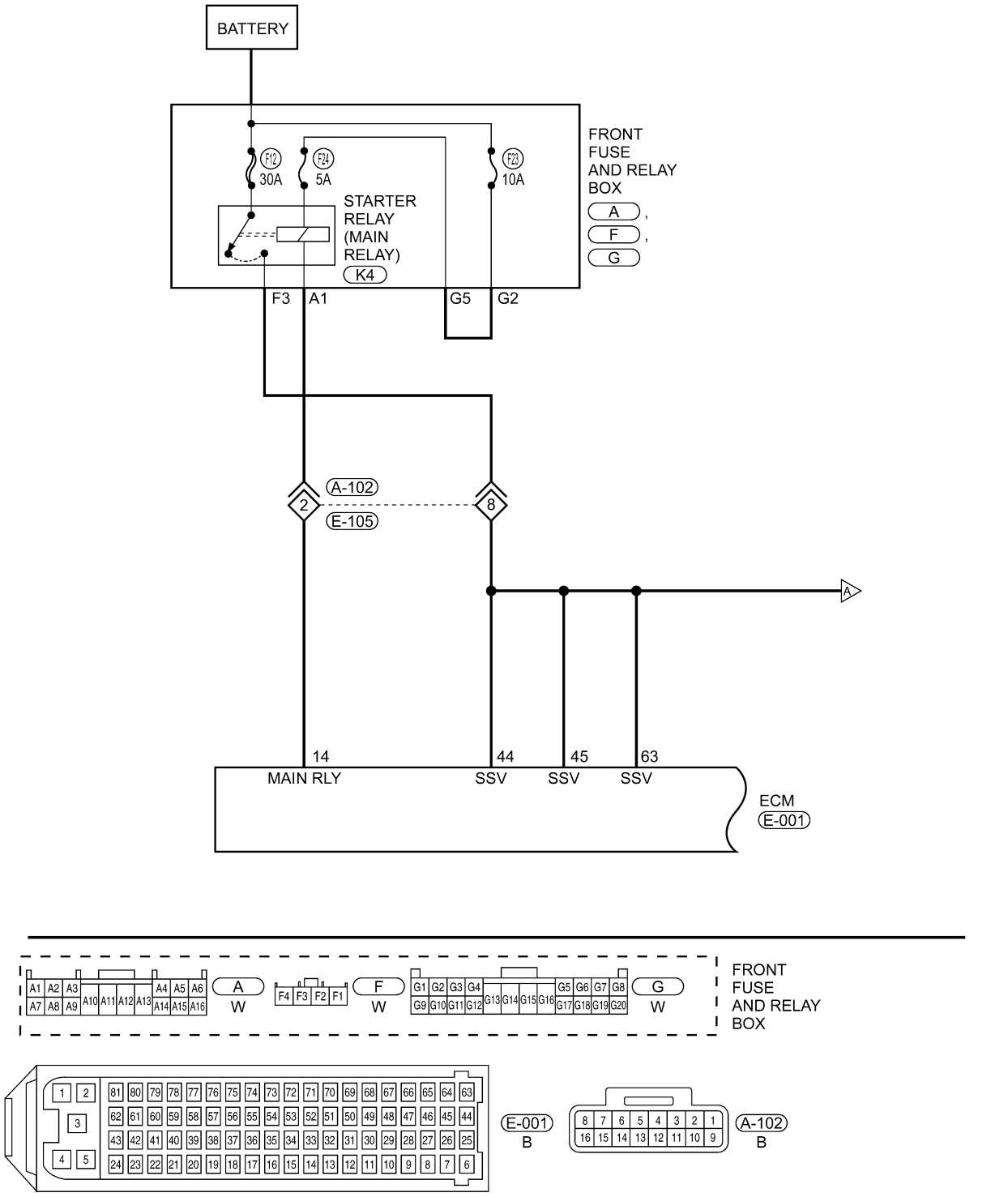

ltsmw030029t

Downloaded from www.Manualslib.com manuals search engine

EEC - 2.0L - INJ - 02

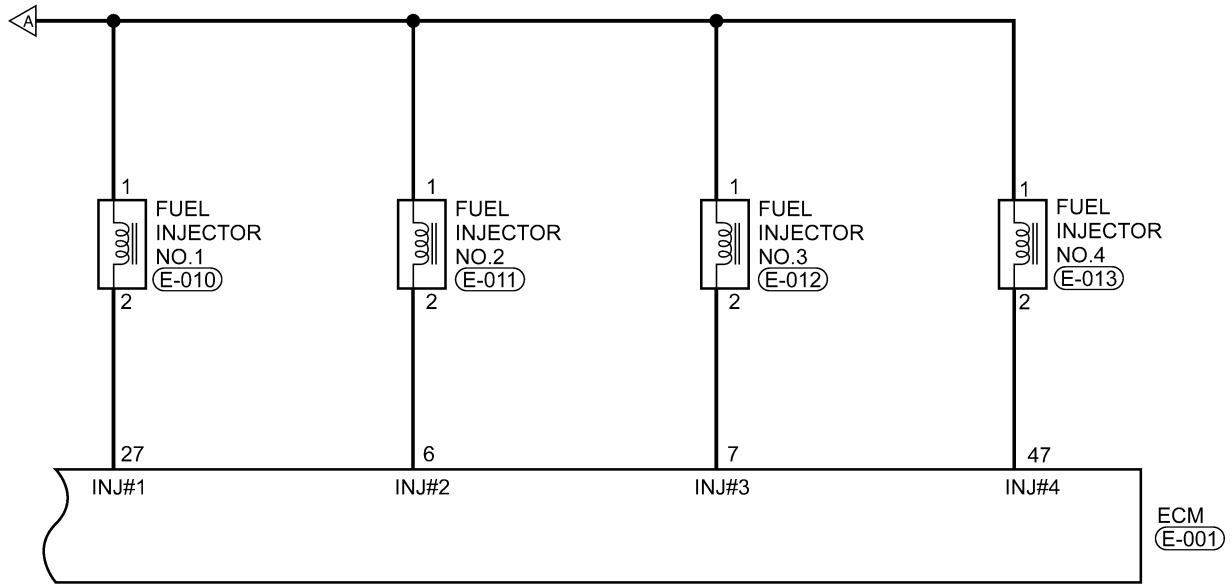

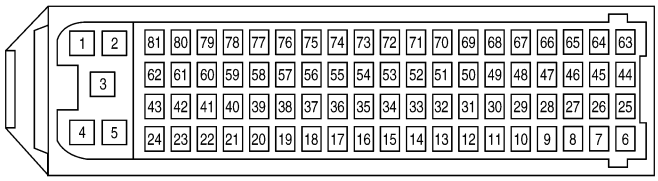

E-001
B

E-010, E-011, E-012, E-013
B B B B

ltsmw030030t

Downloaded from www.Manualslib.com manuals search engine

Check reference values between ECM terminals and ground under the following conditions:

ECM TERMINAL NO.	ITEM	CONDITION	DATA (AVERAGE DC VOLTAGE)
6	Injector 2	• Engine is running • Warm-up condition • Idle • Accelerate suddenly	Voltage: 11 - 14 V
7	Injector 3		
27	Injector 1		
47	Injector 4		

On Board Diagnostic Logic

- Self-diagnosis detection logic.

DTC NO.	DTC DEFINITION	DTC DETECTION CONDITION	POSSIBLE CAUSE
P0201	Cylinder 1 - Injector Circuit	Engine is running	• Injector • Harness or connectors • ECM
P0202	Cylinder 2 - Injector Circuit		
P0203	Cylinder 3 - Injector Circuit		
P0204	Cylinder 4 - Injector Circuit		

DTC Confirmation Procedure:

Before performing the following procedure, confirm that battery voltage is more than 12 V.

- Turn ignition switch off.
- Connect the X-431 scan tool to the Data Link Connector (DLC) - use the most current software available.
- Turn ignition switch on.
- With the scan tool, record and erase stored DTCs in the ECM.
- Start engine and warm it to normal operating temperature then select view DTC.
- If DTC is detected, go to Diagnostic Procedure - Step 1.
- If the DTC is not detected, the DTC condition is intermittent (See Diagnosis & Testing Diagnostic Help in Section 03 Electronic Engine Controls).

NOTE :
While performing electrical diagnosis & testing, always refer to the electrical schematics for specific circuit and component information.

Diagnostic Procedure

1. CHECK GROUND CONNECTIONS

- Turn ignition switch off.
- Loosen and retighten ground screws on the body (See Ground Inspection in Section 03 Electronic Engine Controls).
- Inspect ground connections E-207 and E-208 mounting position (See Vehicle Wiring Harness Layout - Engine Room Harness (With 2.0L Engine) in Section 16 Wiring).

Are the ground connections OK?

Yes >> Go to the next step.

No >> Repair or replace ground harness or connections.

Downloaded from www.Manualslib.com manuals search engine

2. INSPECTION START

- Start engine.

Is any cylinder ignited?

Yes >> If with the X-431, go to the next step.
If without the X-431, go to step 4.

No >> Go to step 5.

3. PERFORM ACTIVE TEST FUNCTION

- Start engine.
- Select ″ACTIVE TEST″ menu.
- Perform injector active test.
- Make sure that each test produces a momentary engine speed drop.

Is the check result normal?

Yes >> Go to step 11.

No >> Go to step 5.

4. CHECK FUNCTION OF INJECTORS

- Listen to injectors for operating sound one by one.

Does a clicking noise exist for all injectors?

Yes >> Go to step 11.

No >> Go to the next step.

5. CHECK INJECTOR ELECTRICAL CONNECTOR

- Turn ignition switch off.
- Disconnect the injector electrical connector (1).
- Inspect the electrical connector for damage.

Is the electrical connector OK?

Yes >> Go to the next step.

No >> Repair or replace the electrical connector as necessary.

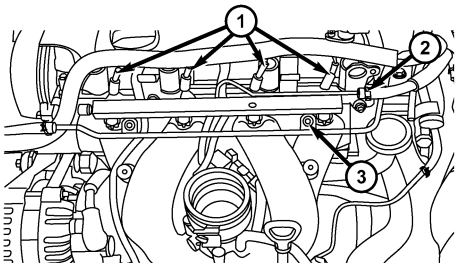

besm040006

Downloaded from www.Manualslib.com manuals search engine

6. CHECK INJECTOR POWER SUPPLY CIRCUIT FOR OPEN

- Turn ignition switch on.
- Check injector supply voltage between sensor terminal and ground in the electrical connector.
- Battery voltage should exist.

Is the check result normal?

Yes >> Go to step 8.

No >> Go to the next step.

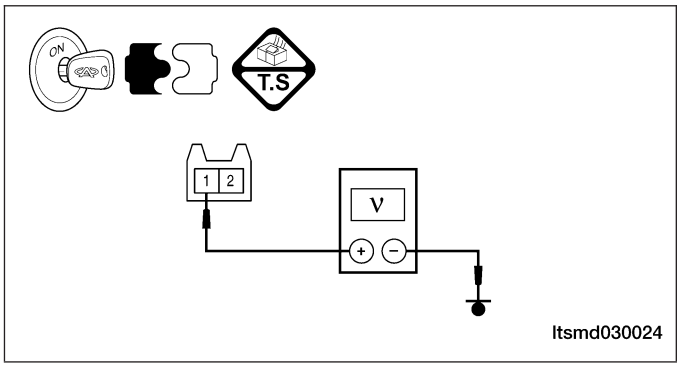

7. DETECT MALFUNCTIONING PART

- Check the following:
  - Harness connectors A-102, E-105
  - Front fuse and relay box F3
  - Fuse 12, fuse 23, fuse 24
  - Check harness for an open or short to ground between injector and fuse.

Is the check result normal?

Yes >> With the X-431, check the system, If OK, go to the next step.

No >> Repair or replace malfunctioning part.

8. CHECK INJECTOR CONTROL CIRCUITS FOR AN OPEN

- Check injector control circuit voltage.
- 3.6 V should exist.

Is the check result normal?

Yes >> Go to step 10.

No >> Go to the next step.

Downloaded from www.Manualslib.com manuals search engine

9. DETECT MALFUNCTIONING PART

- Turn ignition switch off.
- Disconnect ECM harness connector.
- Check harness continuity between following terminals.

INJECTOR NO.	ECM TERMINAL	INJECTOR TERMINAL
1	27	2
2	6	2
3	7	2
4	47	2

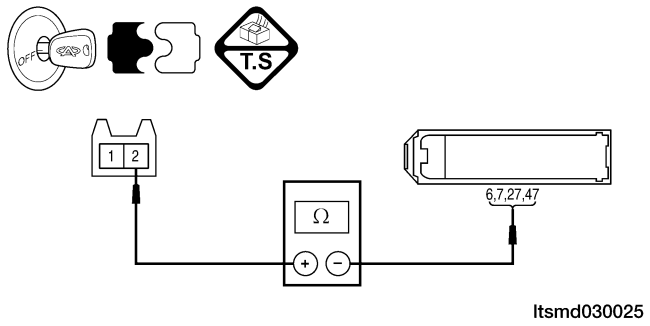

- Continuity should exist.

Is the check result normal?

Yes >> Go to the next step.

No >> Repair circuit for an open in harness or connectors.

10. CHECK INJECTOR RESISTANCE

- Check resistance as table shown.
- Check the fuel injector resistance as shown in the following:

INJECTOR NO.	INJECTOR TERMINAL	RESISTANCE (APPROXIMATELY) Ω (20°C)
1	1 & 2	11 - 16
2	1 & 2	
3	1 & 2	
4	1 & 2	

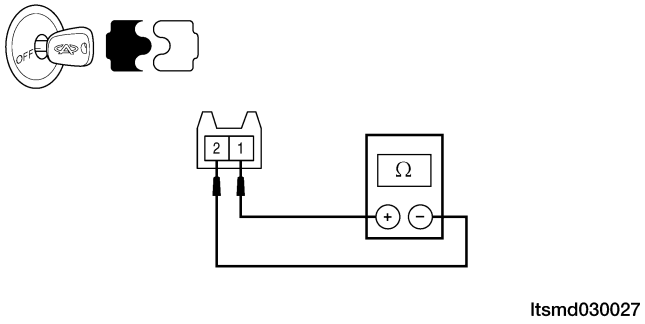

- Also check sensor signal output.
- Connect ECM connector.
- Connect injector connector.
- Check the fuel injector voltage as shown in the following:

TERMINAL NO.	ITEM	CONDITION	DATA (AVERAGE DC VOLTAGE)
6	Injector 2	• Engine is running • Idle • Warm-up condition • Accelerate suddenly	Voltage: 11 - 14 V
7	Injector 3		
27	Injector 1		
47	Injector 4		

Downloaded from www.Manualslib.com manuals search engine

Is the check result normal?

Yes >> Go to the next step.

No >> Replace injector.

11. CHECK DTC

- With the X-431 scan tool, read ECM DTCs.
- See "DTC Confirmation Procedure".

Is DTC P0201, P0202, P0203 or P0204 still present?

Yes >> Replace the ECM.

NOTE : The Immobilizer control module must be matched to the new ECM (See ECM Removal & Installation in Section 03 Electronic Engine Controls).

No >> The system is now operating properly.
Reassemble the vehicle and road test to verify the customers complaint is repaired.

Downloaded from www.Manualslib.com manuals search engine

P0221 - Throttle Position Sensor B Performance

EEC - 2.0L - TPS - 01

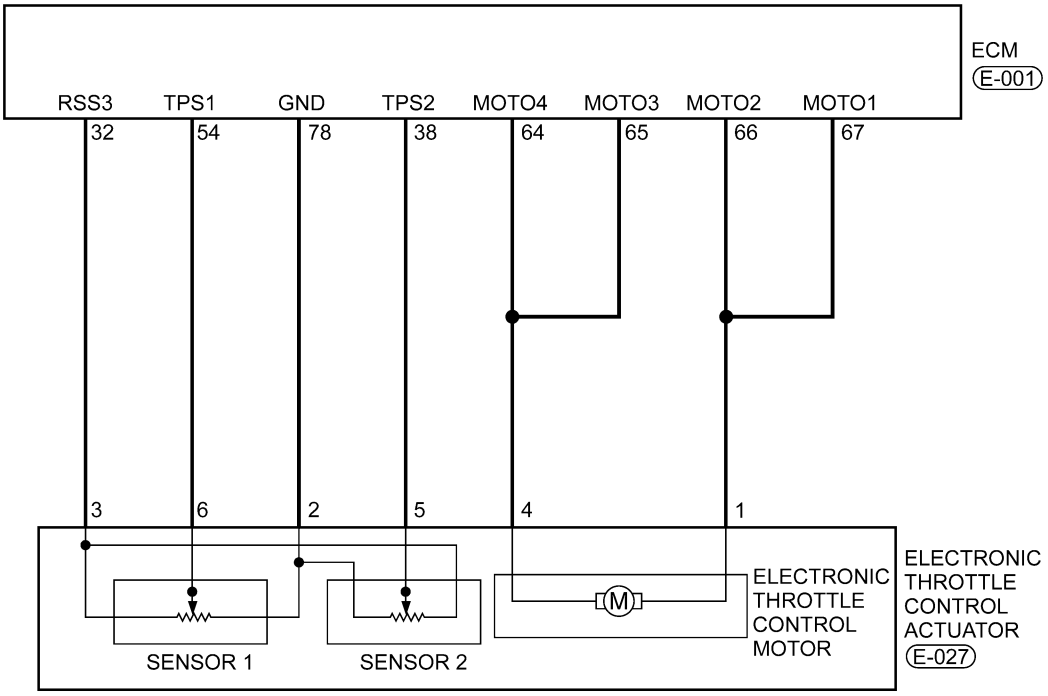

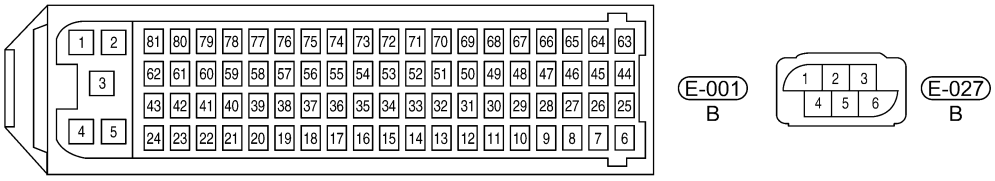

ltsmw030025t

Downloaded from www.Manualslib.com manuals search engine

Check reference values between ECM terminals and ground under the following conditions:

ECM TERMINAL NO.	ITEM	CONDITION		DATA (DC VOLTAGE)
32	Regulated sensor supply 2	Ignition switch: ON	-	Approximately 5 V
38	Electronic throttle control actuator (Position sensor)		• Engine stopped • Accelerator pedal: Fully released	4.24 V
			• Engine stopped • Accelerator pedal: Fully depressed	0.72 V
54	Electronic throttle control actuator		• Engine stopped • Accelerator pedal: Fully released	0.74 V
			• Engine stopped • Accelerator pedal: Fully depressed	4.62 V
64	Motor 4		-	12 V or 0 V
65	Motor 3			
66	Motor 2			0 V or 12 V
67	Motor 1			
78	Sensor (GND)			Approximately 0 V

On Board Diagnostic Logic

- Self-diagnosis detection logic.

DTC NO.	DTC DEFINITION	DTC DETECTION CONDITION	DTC SET CONDITION	POSSIBLE CAUSE
P0221	Throttle position sensor B performance	• Ignition switch: ON • Engine: Running	Rationally incorrect voltage is sent to ECM compared with the signals from TPS1 and TPS2.	• Electronic throttle control actuator (TPS1 and TPS2) • Harness or connectors • Accelerator pedal position sensor 2 • ECM

DTC Confirmation Procedure:

Before performing the following procedure, confirm that battery voltage is more than 12 V.

- Turn ignition switch off.
- Connect the X-431 scan tool to the Data Link Connector (DLC) - use the most current software available.
- Turn ignition switch on.
- With the scan tool, record and erase stored DTCs in the ECM.
- Start engine and warm it to normal operating temperature then select view DTC.
- If DTC is detected, go to Diagnostic Procedure - Step 1.
- If the DTC is not detected, the DTC condition is intermittent (See Diagnosis & Testing Diagnostic Help in Section 03 Electronic Engine Controls).

NOTE :

While performing electrical diagnosis & testing, always refer to the electrical schematics for specific circuit and component information.

Downloaded from www.Manualslib.com manuals search engine

Diagnostic Procedure

1. CHECK GROUND CONNECTIONS

- Turn ignition switch off.
- Loosen and retighten ground screws on the body (See Ground Inspection in Section 03 Electronic Engine Controls).
- Inspect ground connections E-207 and E-208 mounting position (See Vehicle Wiring Harness Layout - Engine Room Harness (With 2.0L Engine) in Section 16 Wiring).

Are the ground connections OK?

Yes >> Go to the next step.

No >> Repair or replace ground harness or connections.

2. CHECK TPS ELECTRICAL CONNECTOR

- Disconnect the TPS electrical connector (1).
- Inspect the electrical connector for damage.

Is the electrical connector OK?

Yes >> Go to the next step.

No >> Repair or replace the electrical connector as necessary.

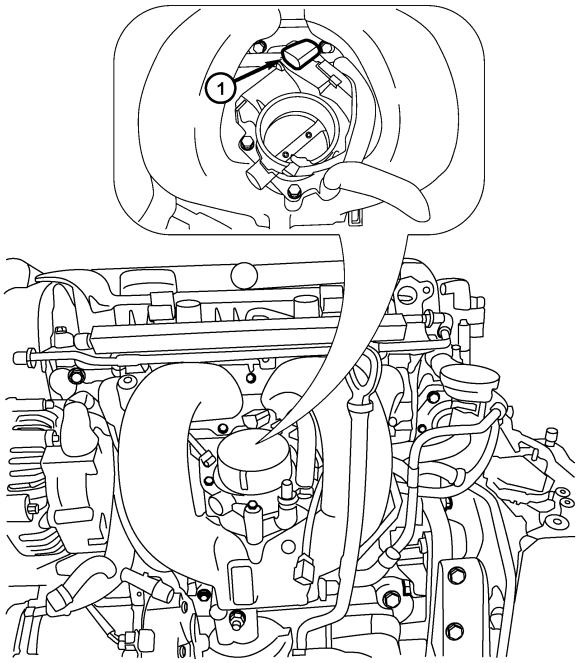

vismd030203

Downloaded from www.Manualslib.com manuals search engine

3. CHECK THE TPS POWER SUPPLY CIRCUIT

- Turn ignition switch on.
- Check supply voltage between TPS terminal 3 and ground in the TPS electrical connector E-027.
- Approximately 5.0 V should exist.

Is the check result normal?

Yes >> Go to step 8.

No >> Go to the next step.

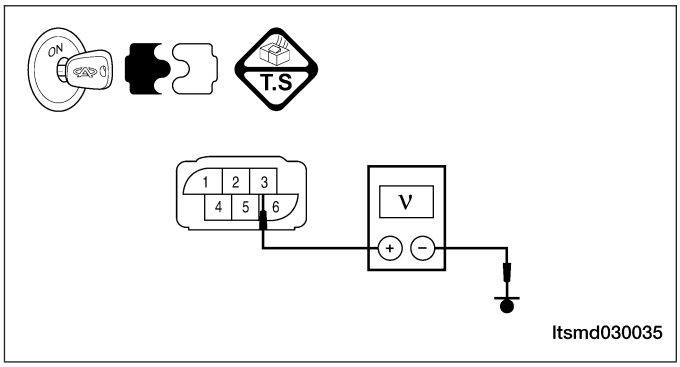

4. CHECK THE TPS POWER SUPPLY CIRCUIT

- Turn ignition switch off.
- Disconnect ECM harness connector.
- Check harness continuity between TPS terminal 3 and ECM terminal 32.
- Continuity should exist.

Is the check result normal?

Yes >> Go to the next step.

No >> Repair or replace circuit for an open.

5. CHECK THE TPS AND THE ACCELERATOR PEDAL POSITION (APP) SENSOR POWER SUPPLY CIRCUIT

- Check harness for short to power and short to ground between following terminals.

ECM TERMINAL	TPS TERMINAL
32	TPS terminal 3
32	APP sensor terminal 3
33	APP sensor terminal 6

Is the check result normal?

Yes >> Go to the next step.

No >> Repair circuit for short to ground or short to power in harness or connectors.

Downloaded from www.Manualslib.com manuals search engine

6. CHECK APP SENSOR

- Connect all harness connectors disconnected.
- Turn ignition switch on.
- Check voltage between ECM terminals 16 (APP sensor 1 signal), 40 (APP sensor 2 signal) and ground under the following conditions:

ECM TERMINAL NO.	APP SENSOR TERMINAL	ITEM	CONDITION		DATA (DC VOLTAGE)
16	APP sensor terminal 4	Accelerator pedal position sensor 1	Ignition switch on	• Engine stopped • Accelerator pedal: Fully released	0.72 - 0.74 V
				• Engine stopped • Accelerator pedal: Fully depressed	3.95 V
40	APP sensor terminal 1	Accelerator pedal position sensor 2		• Engine stopped • Accelerator pedal: Fully released	0.36 - 0.37 V
				• Engine stopped • Accelerator pedal: Fully depressed	1.97 V

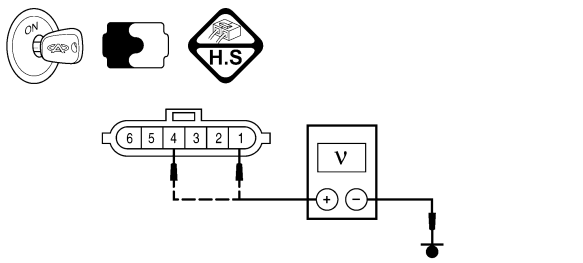

Is the check result normal?

Yes >> Go to step 10.

No >> Replace the Accelerator Pedal Assembly (See Accelerator Pedal Position Sensor Removal & Installation in Section 03 Electronic Engine Controls).

7. CHECK THE TPS SIGNAL CIRCUIT FOR AN OPEN OR SHORT

- Turn ignition switch off.
- Disconnect ECM harness connector.
- Check harness continuity between TPS terminal 5 and ECM terminal 38.
- Continuity should exist.
- Also check harness for short to power and short to ground.

Is the check result normal?

Yes >> Go to the next step.

No >> Repair circuit for an open or short to power or short to ground in harness or connectors.

Downloaded from www.Manualslib.com manuals search engine

8. CHECK THE TPS GROUND CIRCUIT FOR AN OPEN OR SHORT

- Check harness continuity between electronic throttle control actuator terminal 2 and ECM terminal 78.
- Continuity should exist.
- Also check harness for short to power and short to ground.

Is the check result normal?

Yes >> Go to the next step.

No >> Repair or replace circuit for an open or short to power or short to ground in harness or connectors.

9. CHECK TPS

- Connect all harness connectors disconnected.
- Turn ignition switch on.
- Check voltage between ECM terminals 54 (TPS1 signal), 38 (TPS2 signal) and ground under the following conditions:

TPS TERMINAL NO.	ITEM	CONDITION		DATA (DC VOLTAGE)
5	Throttle Position Sensor 2 (TPS2)	Ignition switch: ON	• Engine stopped • Accelerator pedal: Fully released	4.24 V
			• Engine stopped • Accelerator pedal: Fully depressed	0.72 V
6	Throttle Position Sensor 1 (TPS1)		• Engine stopped • Accelerator pedal: Fully released	0.74 V
			• Engine stopped • Accelerator pedal: Fully depressed	4.62 V

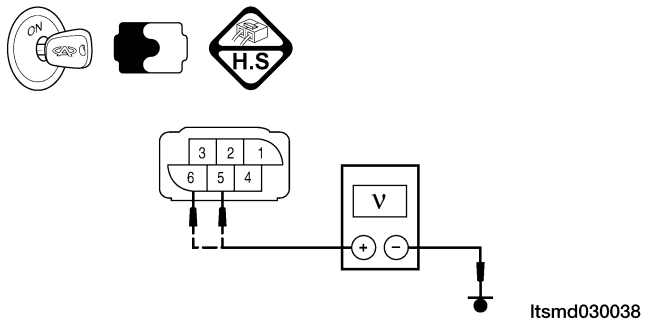

Is the check result normal?

Yes >> Go to the next step.

No >> Replace the Electronic Throttle Control Actuator (See Electronic Throttle Control Actuator Removal & Installation in Section 03 Electronic Engine Controls).

Downloaded from www.Manualslib.com manuals search engine

10. CHECK DTC

- With the X-431 scan tool, read ECM DTCs.
- Refer to ″DTC Confirmation Procedure″.

Is DTC P0221 still present?

Yes >> Replace the ECM.

NOTE : The Immobilizer control module must be matched to the new ECM (See ECM Removal & Installation in Section 03 Electronic Engine Controls).

No >> The system is now operating properly.
Reassemble the vehicle and road test to verify the customers complaint is repaired.

Downloaded from www.Manualslib.com manuals search engine

P0261 - Cylinder 1 Injector Circuit Low
P0264 - Cylinder 2 Injector Circuit Low
P0267 - Cylinder 3 Injector Circuit Low
P0270 - Cylinder 4 Injector Circuit Low

EEC - 2.0L - INJ - 01

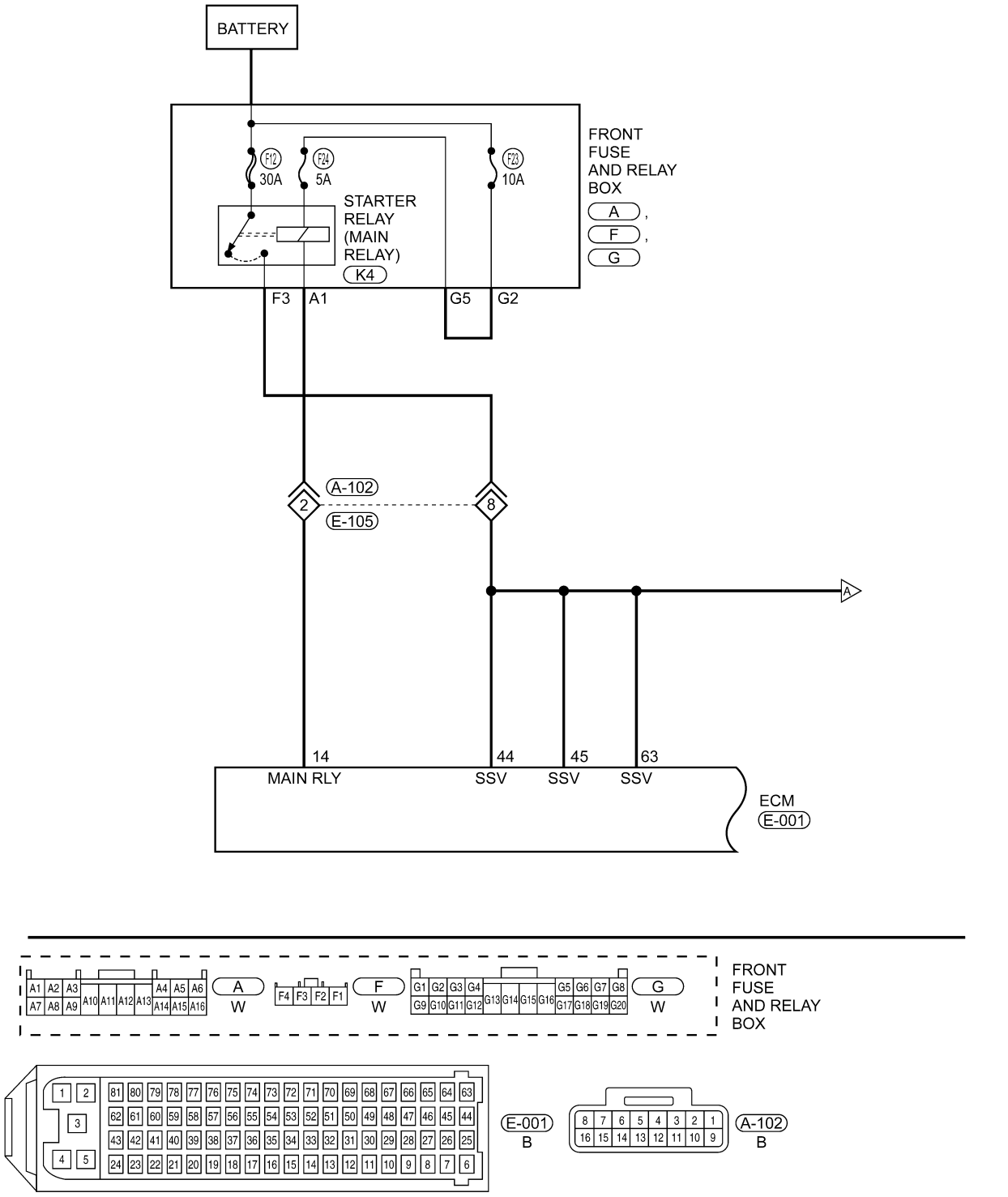

ltsmw030029t

Downloaded from www.Manualslib.com manuals search engine

EEC - 2.0L - INJ - 02

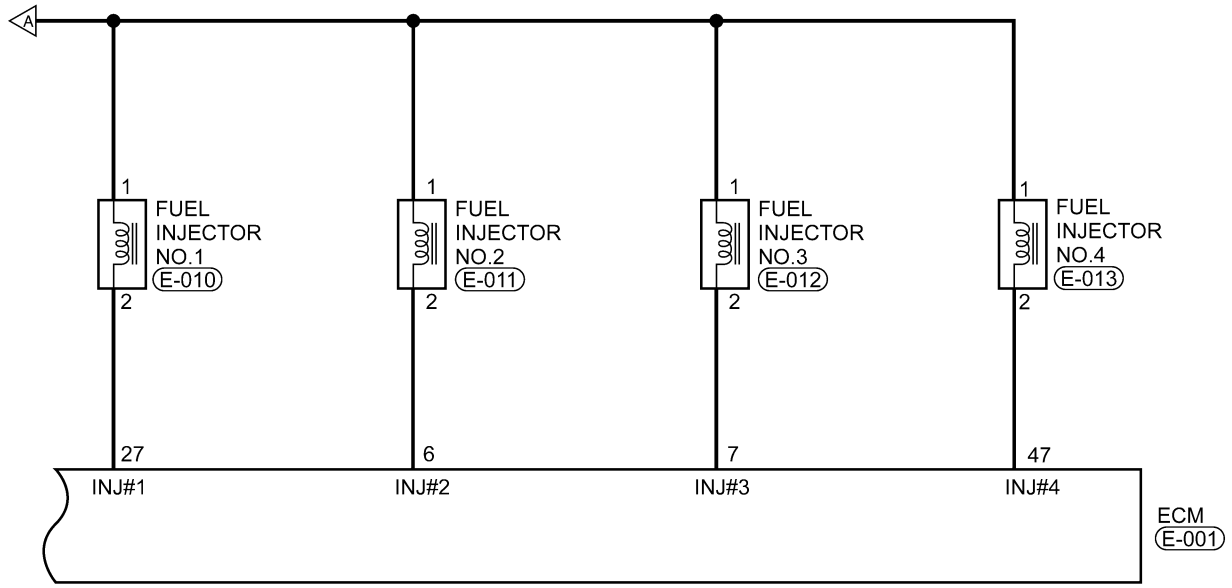

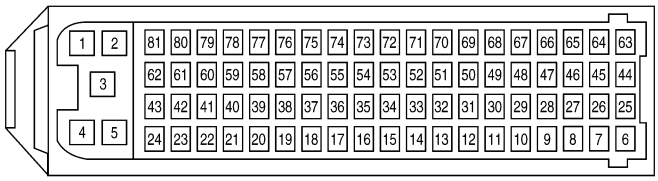

E-001
B

E-010, E-011, E-012, E-013
B B B B

ltsmw030030t

Downloaded from www.Manualslib.com manuals search engine

Check reference values between ECM terminals and ground under the following conditions:

ECM TERMINAL NO.	ITEM	CONDITION	DATA (AVERAGE DC VOLTAGE
6	Injector 2	• Engine is running • Warm-up condition • Idle • Accelerate suddenly	Voltage: 11 - 14 V
7	Injector 3		
27	Injector 1		
47	Injector 4		

On Board Diagnostic Logic

- Self-diagnosis detection logic.

DTC NO.	DTC DEFINITION	DTC DETECTION CONDITION	POSSIBLE CAUSE
P0261	Cylinder 1 - Injector Circuit Low	Engine is running	• Injector • Harness or connectors • ECM
P0264	Cylinder 2 - Injector Circuit Low		
P0267	Cylinder 3 - Injector Circuit Low		
P0270	Cylinder 4 - Injector Circuit Low		

DTC Confirmation Procedure:

Before performing the following procedure, confirm that battery voltage is more than 12 V.

- Turn ignition switch off.
- Connect the X-431 scan tool to the Data Link Connector (DLC) - use the most current software available.
- Turn ignition switch on.
- With the scan tool, record and erase stored DTCs in the ECM.
- Start engine and warm it to normal operating temperature then select view DTC.
- If DTC is detected, go to Diagnostic Procedure - Step 1.
- If the DTC is not detected, the DTC condition is intermittent (See Diagnosis & Testing Diagnostic Help in Section 03 Electronic Engine Controls).

NOTE :
While performing electrical diagnosis & testing, always refer to the electrical schematics for specific circuit and component information.

Diagnostic Procedure

1. CHECK GROUND CONNECTIONS

- Turn ignition switch off.
- Loosen and retighten ground screws on the body (See Ground Inspection in Section 03 Electronic Engine Controls).
- Inspect ground connections E-207 and E-208 mounting position (See Vehicle Wiring Harness Layout - Engine Room Harness (With 2.0L Engine) in Section 16 Wiring).

Are the ground connections OK?

Yes >> Go to the next step.

No >> Repair or replace ground harness or connections.

Downloaded from www.Manualslib.com manuals search engine

2. INSPECTION START

- Start the engine.

Is any cylinder ignited?

Yes >> If with the X-431, go to the next step.
If without the X-431, go to step 4.

No >> Go to step 5.

3. PERFORM ACTIVE TEST FUNCTION

- Select ″ACTIVE TEST″ menu.
- Perform injector active test.
- Make sure that each test produces a momentary engine speed drop.

Is the check result normal?

Yes >> Go to step 10.

No >> Go to step 5.

4. CHECK FUNCTION OF INJECTOR

- Listen to injector operating sound one by one.

Do all injectors clicking noise exist?

Yes >> Go to step 10.

No >> Go to the next step.

5. CHECK INJECTOR ELECTRICAL CONNECTOR

- Turn ignition switch off.
- Disconnect the injector electrical connector (1).
- Inspect the electrical connector for damage.

Is the electrical connector OK?

Yes >> Go to the next step.

No >> Repair or replace the electrical connector as necessary.

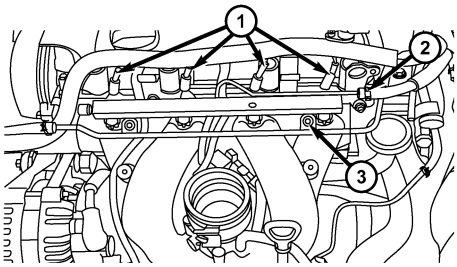

besm040006

Downloaded from www.Manualslib.com manuals search engine

6. CHECK INJECTOR POWER SUPPLY CIRCUIT FOR AN OPEN

- Turn ignition switch on.
- Check injector supply voltage between sensor terminal and ground in the electrical connector.
- Battery voltage should exist.

Is the check result normal?

Yes >> Go to step 8.

No >> Go to the next step.

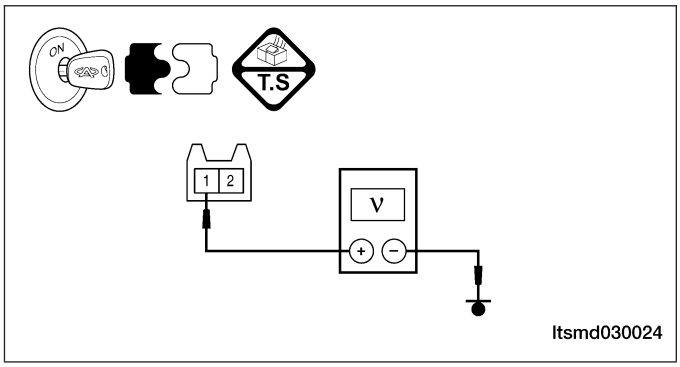

7. DETECT MALFUNCTIONING PART

- Check the following:
  - Harness connectors A-102, E-105
  - Front fuse and relay box F3
  - Fuse 12, fuse 23, fuse 24
  - Harness for shorted between injector and fuse

Is the check result normal?

Yes >> Go to the next step.

No >> Repair malfunctioning part.

8. CHECK INJECTOR CONTROL CIRCUITS FOR A SHORT

- Check injector control circuit voltage.
- 3.6 V should exist.

Is the check result normal?

Yes >> Go to step 10.

No >> Go to the next step.

Downloaded from www.Manualslib.com manuals search engine

9. DETECT MALFUNCTIONING PART

- Turn ignition switch off.
- Disconnect ECM harness connector (1).

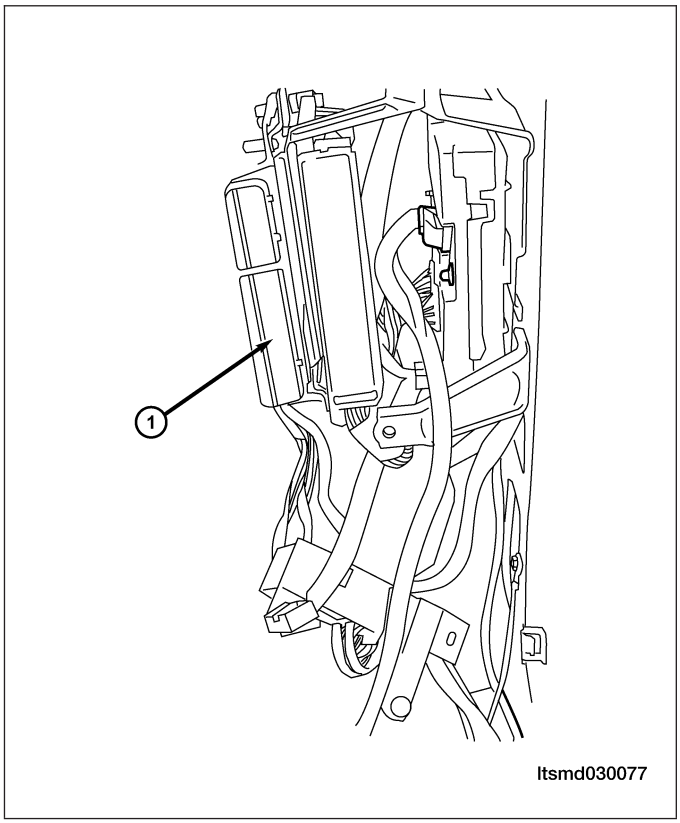

- Check for harness continuity between the following terminals.
- Continuity should not exist.

INJECTOR NO.	INJECTOR TERMINAL	GROUND
1	2	Ground
2	2	
3	2	
4	2	

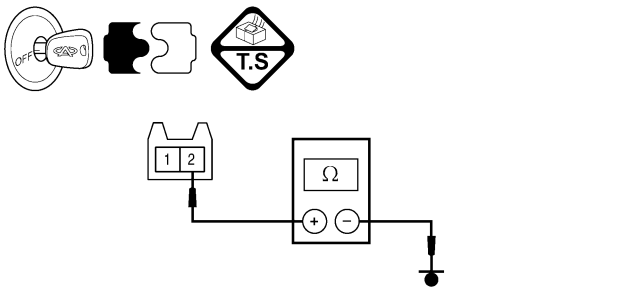

Is the check result normal?

Yes >> Replace the ECM.

NOTE : The Immobilizer control module must be matched to the new ECM (See ECM Removal & Installation in Section 03 Electronic Engine Controls).

No >> Repair circuit for a short in harness or connectors.

Downloaded from www.Manualslib.com manuals search engine

10. CHECK INJECTOR RESISTANCE

- Check resistance as table shown.
- Check the fuel injector resistance as shown in the following:

INJECTOR NO.	INJECTOR TERMINAL	RESISTANCE (APPROXIMATELY) Ω (20°C)
1	1 & 2	11 - 16
2	1 & 2	
3	1 & 2	
4	1 & 2	

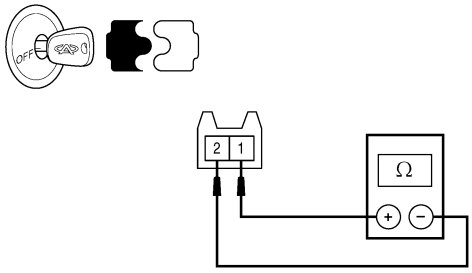

ltsmd030027

- Connect ECM connector.
- Connect injector connector.
- Check the fuel injector voltage as shown in the following:

TERMINAL NO.	ITEM	CONDITION	DATA (AVERAGE DC VOLTAGE)
6	Injector 2	• Engine is running • Warm-up condition • Idle • Accelerate suddenly	Voltage: 11 - 14 V
7	Injector 3		
27	Injector 1		
47	Injector 4		

Is the check result normal?

Yes >> Go to the next step.

No >> Replace injector.

11. CHECK DTC

- With the X-431 scan tool, read ECM DTCs.
- See "DTC Confirmation Procedure".

Is DTC P0261, P0264, P0267 or P0270 still present?

Yes >> Replace the ECM.

NOTE : The Immobilizer control module must be matched to the new ECM (See ECM Removal & Installation in Section 03 Electronic Engine Controls).

No >> The system is now operating properly.
Reassemble the vehicle and road test to verify the customers complaint is repaired.

Downloaded from www.Manualslib.com manuals search engine

P0262 - Cylinder 1 Injector Circuit High
P0265 - Cylinder 2 Injector Circuit High
P0268 - Cylinder 3 Injector Circuit High
P0271 - Cylinder 4 Injector Circuit High

EEC - 2.0L - INJ - 01

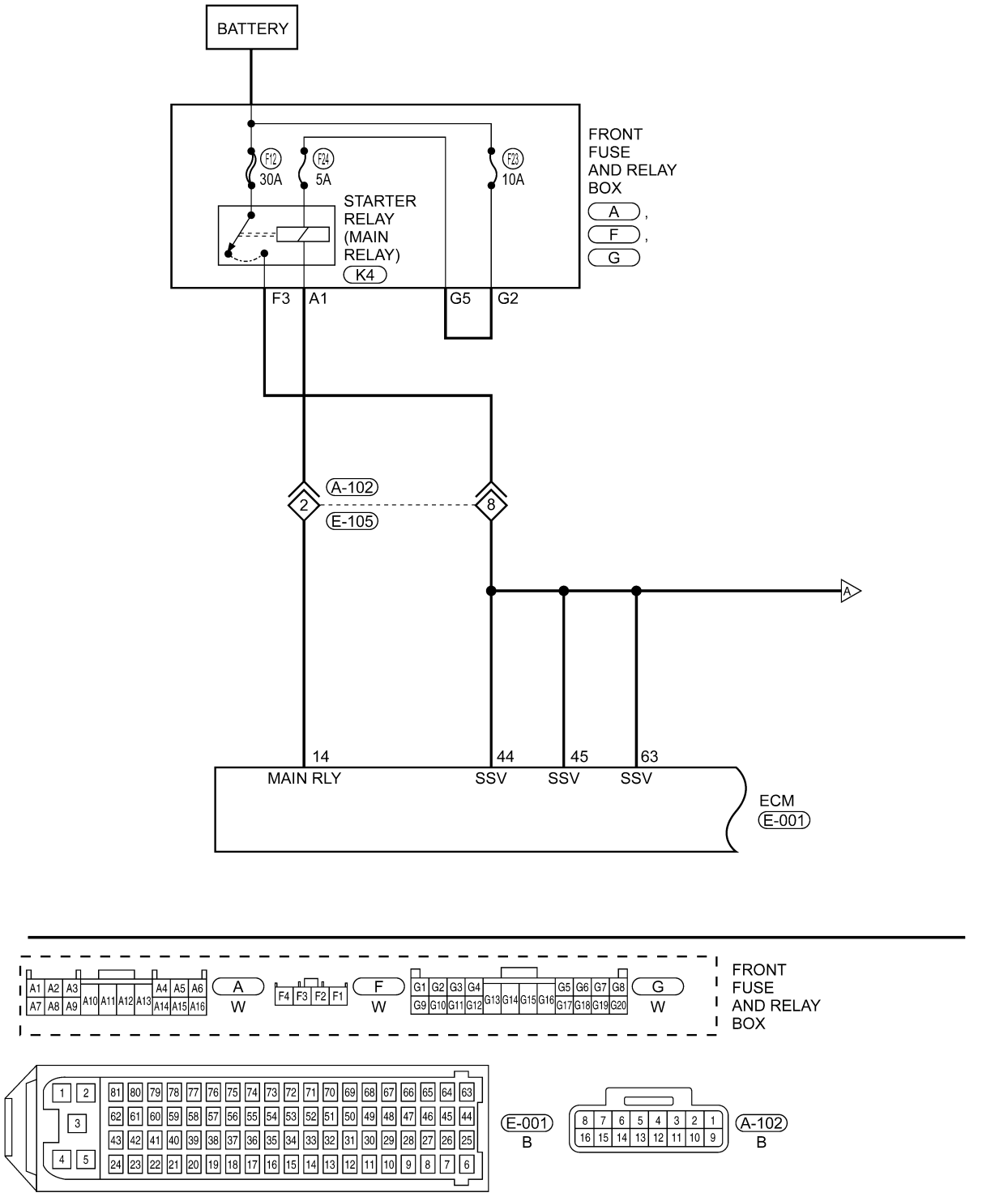

ltsmw030029t

Downloaded from www.Manualslib.com manuals search engine

EEC - 2.0L - INJ - 02

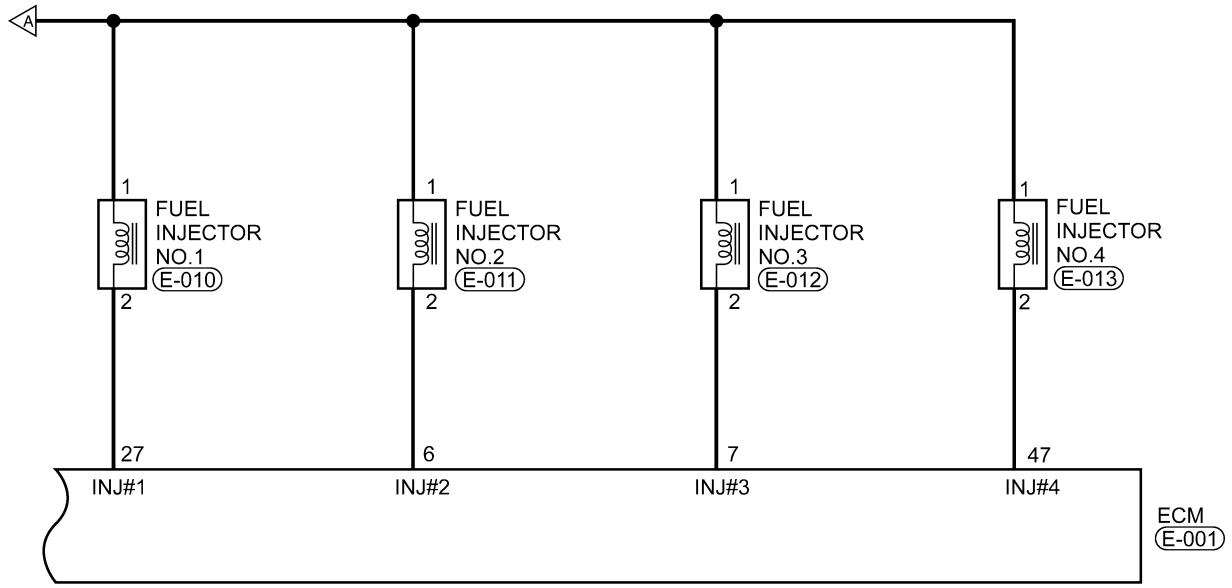

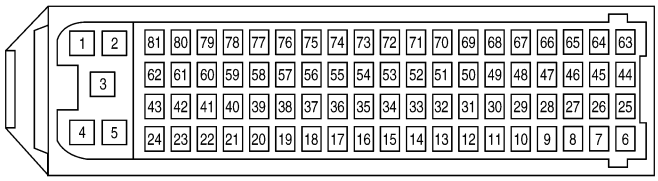

E-001
B

E-010, E-011, E-012, E-013
B B B B

ltsmw030030t

Downloaded from www.Manualslib.com manuals search engine

Check reference values between ECM terminals and ground under the following conditions:

ECM TERMINAL NO.	ITEM	CONDITION	DATA (AVERAGE DC VOLTAGE)
6	Injector 2	• Engine is running • Warm-up condition • Idle • Accelerate suddenly	Voltage: 11 V - 14 V
7	Injector 3		
27	Injector 1		
47	Injector 4		

On Board Diagnostic Logic

- Self-diagnosis detection logic.

DTC NO.	DTC DEFINITION	DTC DETECTION CONDITION	POSSIBLE CAUSE
P0262	Cylinder 1 - Injector Circuit High	Engine is running	• Injector • Harness or connectors • ECM
P0265	Cylinder 2 - Injector Circuit High		
P0268	Cylinder 3 - Injector Circuit High		
P0271	Cylinder 4 - Injector Circuit High		

DTC Confirmation Procedure:

Before performing the following procedure, confirm that battery voltage is more than 12 V.

- Turn ignition switch off.
- Connect the X-431 scan tool to the Data Link Connector (DLC) - use the most current software available.
- Turn ignition switch on.
- With the scan tool, record and erase stored DTCs in the ECM.
- Start engine and warm it to normal operating temperature then select view DTC.
- If DTC is detected, go to Diagnostic Procedure - Step 1.
- If the DTC is not detected, the DTC condition is intermittent (See Diagnosis & Testing Diagnostic Help in Section 03 Electronic Engine Controls).

NOTE :
While performing electrical diagnosis & testing, always refer to the electrical schematics for specific circuit and component information.

Diagnostic Procedure

1. CHECK GROUND CONNECTIONS

- Turn ignition switch off.
- Loosen and retighten ground screws on the body (See Ground Inspection in Section 03 Electronic Engine Controls).
- Inspect ground connections E-207 and E-208 mounting position (See Vehicle Wiring Harness Layout - Engine Room Harness (With 2.0L Engine) in Section 16 Wiring).

Are the ground connections OK?

Yes >> Go to the next step.

No >> Repair or replace ground harness or connections.

Downloaded from www.Manualslib.com manuals search engine

2. INSPECTION START

- Start the engine.

Is any cylinder ignited?

Yes >> If with the X-431, go to the next step.
If without the X-431, go to step 4.

No >> Go to step 5.

3. PERFORM ACTIVE TEST FUNCTION

- Start engine.
- Select ″ACTIVE TEST″ menu.
- Perform injector active test.
- Make sure that each test produces a momentary engine speed drop.

Is the check result normal?

Yes >> Go to step 10.

No >> Go to step 5.

4. CHECK FUNCTION OF INJECTOR

- Listen to injector operating sound one by one.

Do all injectors clicking noise exist?

Yes >> Go to step 10.

No >> Go to the next step.

5. CHECK INJECTOR ELECTRICAL CONNECTOR

- Turn ignition switch off.
- Disconnect the injector electrical connector (1).
- Inspect the electrical connector for damage.

Is the electrical connector OK?

Yes >> Go to the next step.

No >> Repair or replace the electrical connector as necessary.

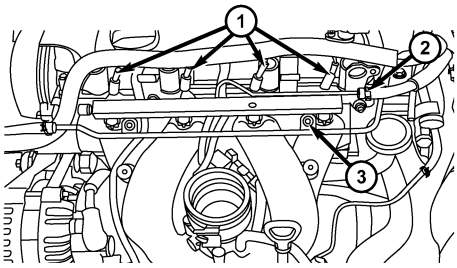

besm040006

Downloaded from www.Manualslib.com manuals search engine

6. CHECK INJECTOR POWER SUPPLY CIRCUIT FOR SHORTED

- Turn ignition switch on.
- Check injector supply voltage between sensor terminal and ground in the electrical connector.
- Battery voltage should exist.

Is the check result normal?

Yes >> Go to step 8.

No >> Go to the next step.

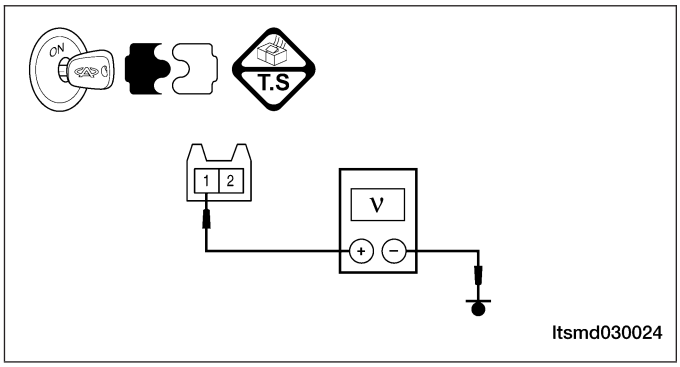

7. DETECT MALFUNCTIONING PART

- Check the following:
  - Harness connectors A-102, E-105
  - Front fuse and relay box F3
  - Fuse 12, fuse 23, fuse 24
  - Harness for an open or short between injector and fuse

Is the check result normal?

Yes >> With the X-431, check the system, If OK, go to the next step.

No >> Repair malfunctioning part.

8. CHECK INJECTOR CONTROL CIRCUITS FOR A SHORT

- Check injector control circuit voltage.
- 3.6 V should exist.

Is the check result normal?

Yes >> Go to step 10.

No >> Go to the next step.

9. DETECT MALFUNCTIONING PART

- Turn ignition switch off.
- Disconnect ECM harness connector.
- Check if the injector control circuits short to power supply circuits.
- Check the following.
- Voltage should not exist.

INJECTOR NO.	POWER SUPPLY CIRCUIT	INJECTOR TERMINAL
1	Power supply circuit	2
2		2
3		2
4		2

Downloaded from www.Manualslib.com manuals search engine

Is the check result normal?

Yes >> Replace the ECM.

NOTE : The Immobilizer control module must be matched to the new ECM (See ECM Removal & Installation in Section 03 Electronic Engine Controls).

No >> Repair circuit for a short in harness or connectors.

10. CHECK INJECTOR RESISTANCE

- Check resistance as table shown.
- Check the fuel injector resistance as shown in the following:

INJECTOR NO.	INJECTOR TERMINAL	RESISTANCE (APPROXIMATELY) Ω (20°C)
1	1 & 2	11 - 16
2	1 & 2	
3	1 & 2	
4	1 & 2	

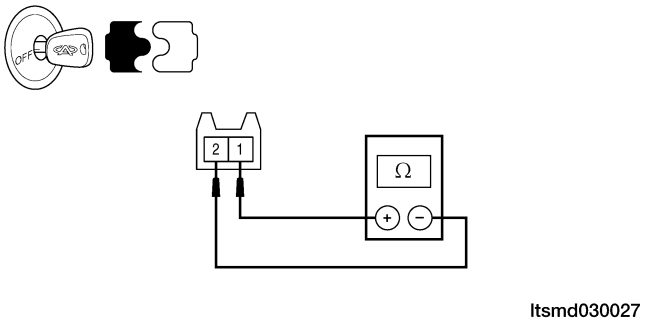

- Connect ECM connector.
- Connect injector connector.
- Check the fuel injector voltage as shown in the following:

TERMINAL NO.	ITEM	CONDITION	DATA (AVERAGE DC VOLTAGE)
6	Injector 2	• Engine is running • Warm-up condition • Idle • Accelerate suddenly	Voltage: 11 V - 14 V
7	Injector 3		
27	Injector 1		
47	Injector 4		

Is the check result normal?

Yes >> Go to the next step.

No >> Replace injector.

Downloaded from www.Manualslib.com manuals search engine

11. CHECK DTC

- With the X-431 scan tool, read ECM DTCs.
- See "DTC Confirmation Procedure".

Is DTC P0262, P0265, P0268 or P0271 still present?

Yes >> Replace the ECM.

NOTE : The Immobilizer control module must be matched to the new ECM (See ECM Removal & Installation in Section 03 Electronic Engine Controls).

No >> The system is now operating properly.
Reassemble the vehicle and road test to verify the customers complaint is repaired.

Downloaded from www.Manualslib.com manuals search engine

P0321 - Distributor Engine Speed In Phase Circuit Performance

EEC - 2.0L - POS - 01

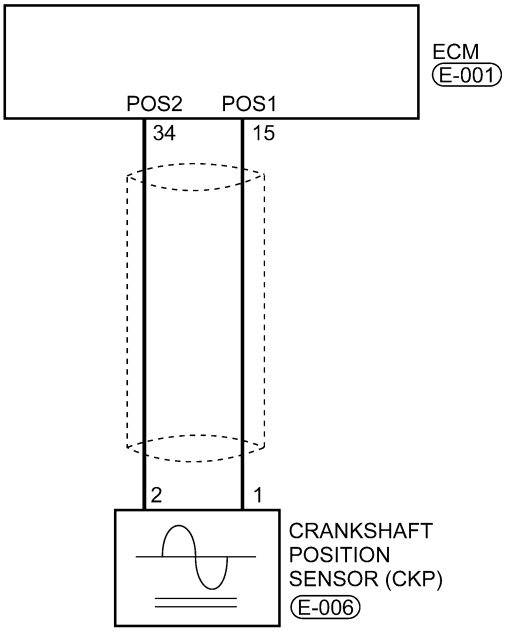

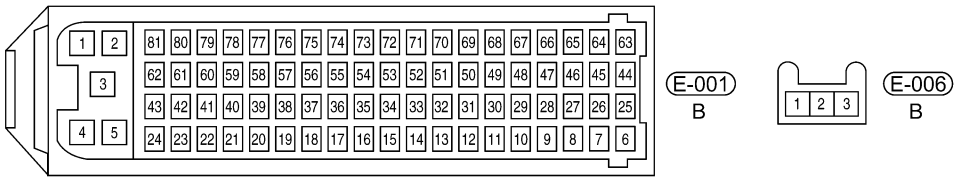

ltsmw030027t

Downloaded from www.Manualslib.com manuals search engine

Check reference values between ECM terminals and ground under the following conditions:

ECM TERMINAL NO.	ITEM	CONDITION	DATA (AVERAGE DC VOLTAGE)
15	Crankshaft Position (CKP) sensor	• Ignition switch: ON • Engine: Not cranking	3 V
34			

On Board Diagnostic Logic

- Self-diagnosis detection logic.

DTC NO.	DTC DEFINITION	DTC DETECTION CONDITION	DTC SET CONDITION	POSSIBLE CAUSE
P0321	Distributor engine speed in phase circuit performance	Engine is running	ECM detected that the input signal is out of the acceptable range.	• CKP • Crankshaft signal plate • Harness or connectors • ECM

DTC Confirmation Procedure:

Before performing the following procedure, confirm that battery voltage is more than 12 V.

- Turn ignition switch off.
- Connect the X-431 scan tool to the Data Link Connector (DLC) - use the most current software available.
- Turn ignition switch on.
- With the scan tool, record and erase stored DTCs in the ECM.
- Start engine and warm it to normal operating temperature then select view DTC.
- If DTC is detected, go to Diagnostic Procedure - Step 1.
- If the DTC is not detected, the DTC condition is intermittent (See Diagnosis & Testing Diagnostic Help in Section 03 Electronic Engine Controls).

NOTE :
While performing electrical diagnosis & testing, always refer to the electrical schematics for specific circuit and component information.

Diagnostic Procedure

1. CHECK GROUND CONNECTIONS

- Turn ignition switch off.
- Loosen and retighten ground screws on the body (See Ground Inspection in Section 03 Electronic Engine Controls).
- Inspect ground connections E-207 and E-208 mounting position (See Vehicle Wiring Harness Layout - Engine Room Harness (With 2.0L Engine) in Section 16 Wiring).

Are the ground connections OK?

Yes >> Go to the next step.

No >> Repair or replace ground harness or connections.

Downloaded from www.Manualslib.com manuals search engine

2. CHECK CKP SENSOR ELECTRICAL CONNECTOR

- Turn ignition switch off.
- Disconnect the CKP sensor (1) electrical connector.
- Inspect the electrical connector for damage.

Is the electrical connector OK?

Yes >> Go to the next step.

No >> Repair or replace the electrical connector as necessary.

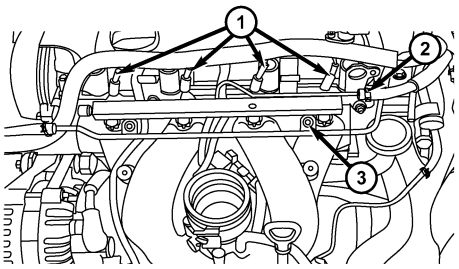

besm040006

3. CHECK CKP SENSOR REFERENCE VOLTAGE

- Turn ignition switch on.
- Check CKP sensor supply voltage between sensor connector E-006, terminal 1 and ground, terminal 2 and ground in the sensor electrical connector.
- 3 V should exist.

Is the check result normal?

Yes >> Go to step 5.

No >> Go to the next step.

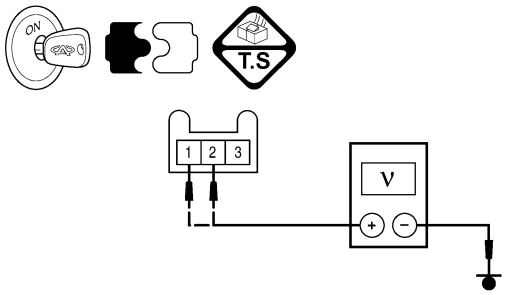

ltsmd030048

4. DETECT MALFUNCTIONING PART

- Check the following:
  - Harness for an open or short between CKP sensor and ECM.

Is the check result normal?

Yes >> Replace the ECM.

NOTE : The Immobilizer control module must be matched to the new ECM (See ECM Removal & Installation in Section 03 Electronic Engine Controls).

No >> Repair circuit for an open or short in harness or connectors.

Downloaded from www.Manualslib.com manuals search engine

5. CHECK CKP SENSOR SIGNAL WAVE PATTERN

- Connect ECM connector.
- Connect CKP sensor connector.
- Check sensor output signal when engine is running.

	CKP SENSOR SIGNAL
ENGINE ANALYZER (KES-200)	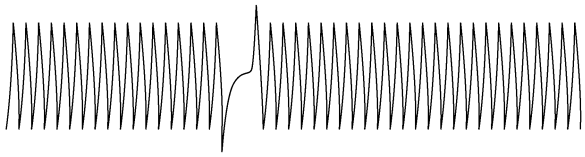 vismd030002

Is the CKP sensor output signal normal?

Yes >> Go to step 9.

No >> Go to the next step.

6. CHECK CKP SENSOR

- Check resistance as table shown.
- Remove the sensor.
- Visually check the sensor for chipping.

TERMINAL NO.	RESISTANCE Ω (25°C)	
1 & 2	Approximately 860 Ω	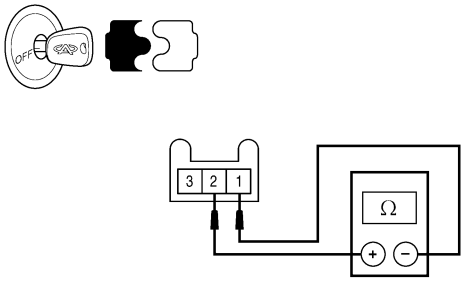 ltsmd030049

Is the check result normal?

Yes >> Replace the CKP sensor with a known good CKP sensor.
Monitor the CKP sensor signal on the KES-200 screen.
– If the CKP sensor signals were normal, the system is OK.
– If the CKP sensor signals were still irregular or missing, go to step 7.

No >> Replace CKP sensor.

Downloaded from www.Manualslib.com manuals search engine

7. CHECK INSTALLED CLEARANCE

- Check the installed clearance (See CKP sensor Removal & Installation in Section 08 Transaxle & Transfer Case).
- 0.8 - 1.2 mm should exist.

Is the check result normal?

Yes >> Go to the next step.

No >> Reinstall CKP sensor.

8. CHECK GEAR TOOTH

- Visually check for chipping signal plate gear tooth.

Is the check result normal?

Yes >> Go to the next step.

No >> Replace the signal plate

9. CHECK DTC

- With the X-431 scan tool, read ECM DTCs.
- Refer to ″DTC Confirmation Procedure″.

Is DTC P0321 still present?

Yes >> Replace the ECM.

NOTE : The Immobilizer control module must be matched to the new ECM (See ECM Removal & Installation in Section 03 Electronic Engine Controls).

No >> The system is now operating properly.
Reassemble the vehicle and road test to verify the customers complaint is repaired.

Downloaded from www.Manualslib.com manuals search engine

P0324 - Knock Control System Error

EEC - 2.0L - KS - 01

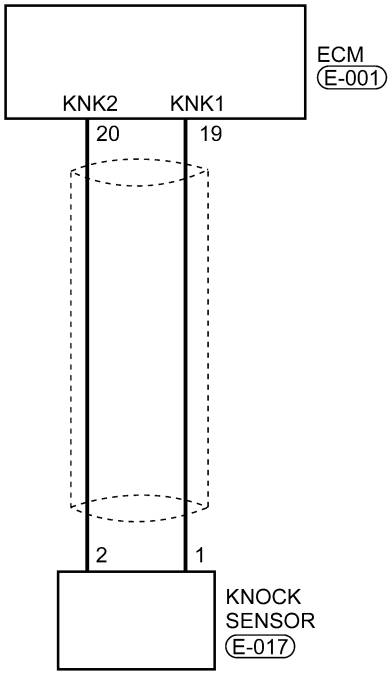

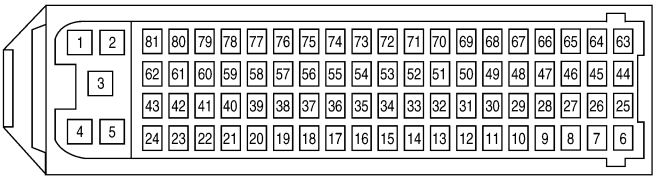

E-001
B

E-017
L

ltsmw030028t

Downloaded from www.Manualslib.com manuals search engine

Check reference values between ECM terminals and ground under the following conditions:

ECM TERMINAL NO.	ITEM	TEST METHOD	DATA (AVERAGE DC VOLTAGE)
19	Knock sensor 1	• Test Method 1: Knock at cylinder with rubber hammer • Test Method 2: Knock at sensor slightly	Output signal voltage should exist.
20	Knock sensor 2		

On Board Diagnostic Logic

- Self-diagnosis detection logic.

DTC NO.	DTC DEFINITION	DTC SET CONDITION	POSSIBLE CAUSE
P0324	Knock control system error	ECM detected that the input signal is out of the acceptable range.	• Knock sensor • Harness or connectors • ECM

DTC Confirmation Procedure:

Before performing the following procedure, confirm that battery voltage is more than 12 V.

- Turn ignition switch off.
- Connect the X-431 scan tool to the Data Link Connector (DLC) - use the most current software available.
- Turn ignition switch on.
- With the scan tool, record and erase stored DTCs in the ECM.
- Run engine for a while then select view DTC.
- If DTC is detected, go to Diagnostic Procedure - Step 1.
- If the DTC is not detected, the DTC condition is intermittent (See Diagnosis & Testing Diagnostic Help in Section 03 Electronic Engine Controls).

NOTE :
While performing electrical diagnosis & testing, always refer to the electrical schematics for specific circuit and component information.

Diagnostic Procedure

1. CHECK GROUND CONNECTIONS

- Turn ignition switch off.
- Loosen and retighten ground screws on the body (See Ground Inspection in Section 03 Electronic Engine Controls).
- Inspect ground connections E-207 and E-208 mounting position (See Vehicle Wiring Harness Layout - Engine Room Harness (With 2.0L Engine) in Section 16 Wiring).

Are the ground connections OK?

Yes >> Go to the next step.

No >> Repair or replace ground harness or connections.

Downloaded from www.Manualslib.com manuals search engine

2. CHECK KNOCK SENSOR ELECTRICAL CONNECTOR

- Turn ignition switch off.
- Disconnect the knock sensor (1) electrical connector.
- Inspect the electrical connector for damage.

Is the electrical connector OK?

Yes >> Go to the next step.

No >> Repair or replace the electrical connector as necessary.

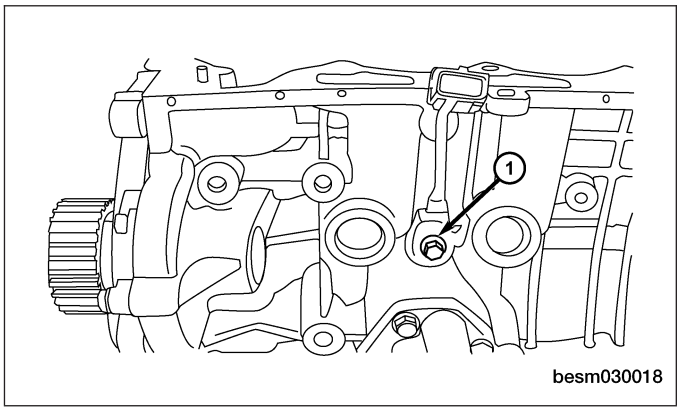

3. CHECK KNOCK SENSOR RESISTANCE

- Check resistance between knock sensor connector E-017, terminal 1 and terminal 2.
- The resistance should above 1 MΩ.

Is the check result normal?

Yes >> Go to the next step.

No >> Replace knock sensor.

4. CHECK KNOCK SENSOR INPUT SIGNAL CIRCUIT

- Disconnect ECM harness connector.
- Check harness continuity between sensor connector E-017, terminal 1 and ECM terminal 19,, sensor terminal 2 and ECM terminal 20.

ECM TERMINAL	KNOCK SENSOR TERMINAL
19	1
20	2

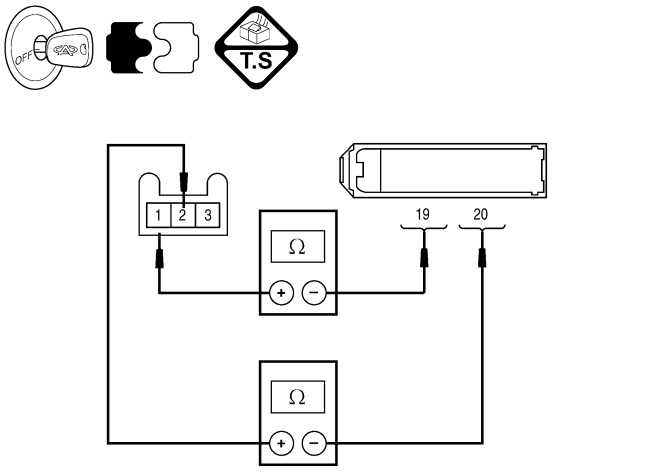

Downloaded from www.Manualslib.com manuals search engine

- continuity should exist.
- Also check harness for short to ground and short to power.

Is the check result normal?

Yes >> Go to step 5.

No >> Repair circuit for an open or short in harness or connectors.

5. CHECK KNOCK SENSOR SIGNAL

- Connect knock sensor connector.
- Check knock sensor (1) output signal as table shown.

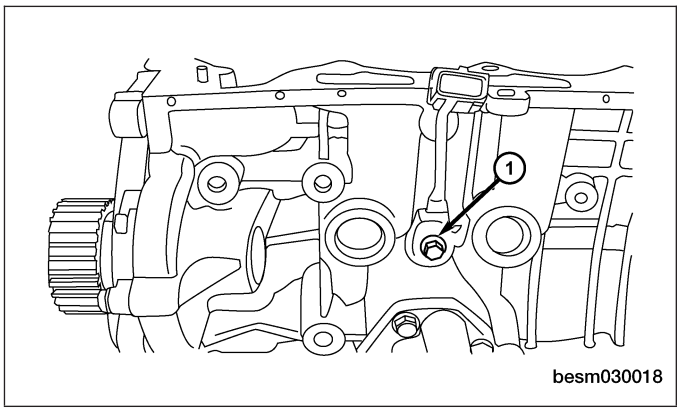

- Set digital multimeter to the voltage range.

KNOCK SENSOR TERMINAL NO.	TEST METHOD	
1 & 2	Test Method 1: Knock at cylinder with rubber hammer	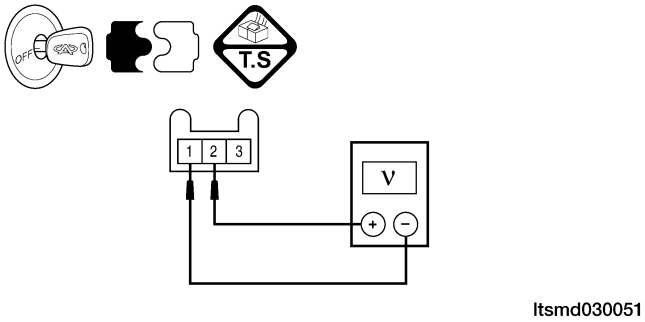
	Test Method 2: Knock at sensor slightly	

- Output signal voltage should exist.

Is the check result normal?

Yes >> Go to the next step.

No >> Replace knock sensor.

Downloaded from www.Manualslib.com manuals search engine

6. CHECK DTC

- With the X-431 scan tool, read ECM DTCs.
- Refer to ″DTC Confirmation Procedure″.

Is DTC P0324 still present?

Yes >> Replace the ECM.

NOTE : The Immobilizer control module must be matched to the new ECM (See ECM Removal & Installation in Section 03 Electronic Engine Controls).

No >> The system is now operating properly.
Reassemble the vehicle and road test to verify the customers complaint is repaired.

Downloaded from www.Manualslib.com manuals search engine

P0343 - Camshaft Position Sensor Circuit High Input

EEC - 2.0L - PHASE - 01

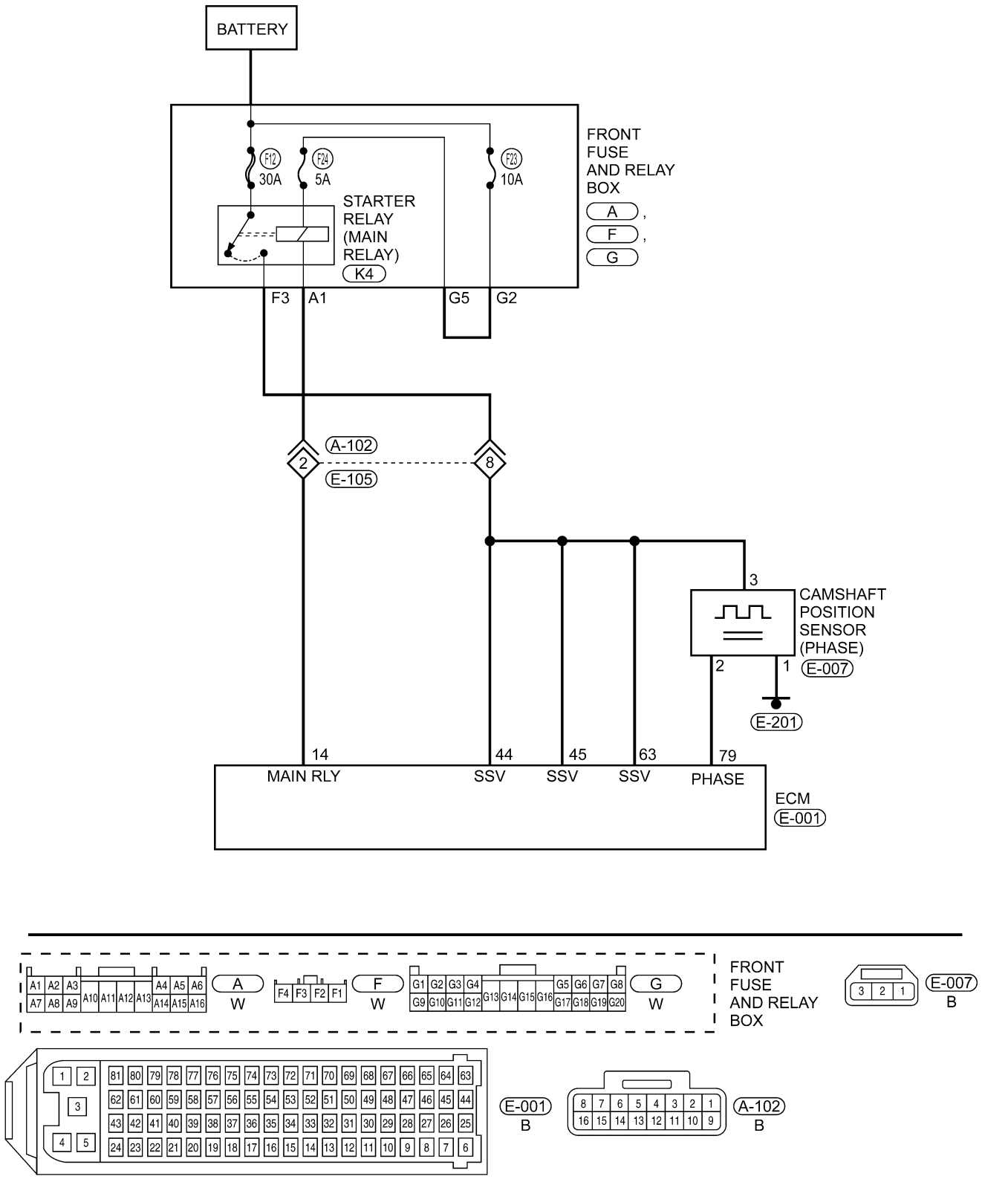

ltsmw030032t

Downloaded from www.Manualslib.com manuals search engine

Check reference values between ECM terminals and ground under the following conditions:

ECM TERMINAL NO.	ITEM	CONDITION	DATA (AVERAGE DC VOLTAGE)
79	Camshaft Position (CMP) sensor	• Ignition switch: ON • Engine: Not cranking	11 V

On Board Diagnostic Logic

- Self-diagnosis detection logic.

DTC NO.	DTC DEFINITION	DTC DETECTION CONDITION	DTC SET CONDITION	POSSIBLE CAUSE
P0343	Camshaft Position (CMP) sensor circuit high input	Engine is running	ECM detected that the input signal is out of the acceptable range.	• CMP sensor • Camshaft • Harness or connectors • ECM

DTC Confirmation Procedure:

Before performing the following procedure, confirm that battery voltage is more than 12 V.

- Turn ignition switch off.
- Connect the X-431 scan tool to the Data Link Connector (DLC) - use the most current software available.
- Turn ignition switch on.
- With the scan tool, record and erase stored DTCs in the ECM.
- Run engine for a while then select view DTC.
- If DTC is detected, go to Diagnostic Procedure - Step 1.
- If the DTC is not detected, the DTC condition is intermittent (See Diagnosis & Testing Diagnostic Help in Section 03 Electronic Engine Controls).

NOTE :
While performing electrical diagnosis & testing, always refer to the electrical schematics for specific circuit and component information.

Diagnostic Procedure

1. CHECK GROUND CONNECTIONS

- Turn ignition switch off.
- Loosen and retighten ground screws on the body (See Ground Inspection in Section 03 Electronic Engine Controls).
- Inspect ground connections E-207 and E-208 mounting position (See Vehicle Wiring Harness Layout - Engine Room Harness (With 2.0L Engine) in Section 16 Wiring).

Are the ground connections OK?

Yes >> Go to the next step.

No >> Repair or replace ground harness or connections.

Downloaded from www.Manualslib.com manuals search engine

2. CHECK THE CMP SENSOR ELECTRICAL CONNECTOR

- Disconnect the CMP sensor electrical connector (1).
- Inspect the electrical connector for damage.

Is the electrical connector OK?

Yes >> Go to the next step.

No >> Repair or replace the electrical connector as necessary.

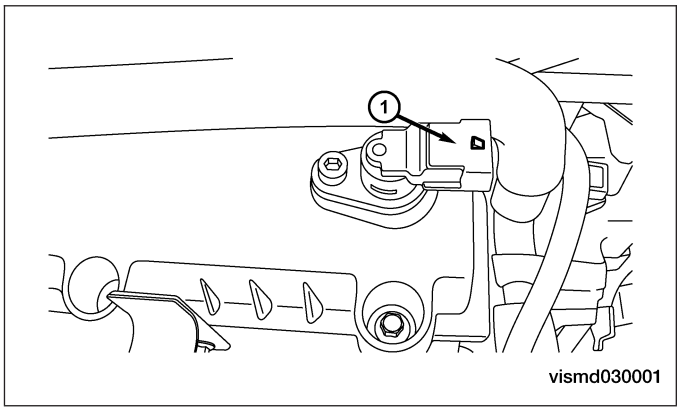

3. CHECK THE CMP SENSOR POWER SUPPLY CIRCUIT FOR AN OPEN OR SHORT

- Turn ignition switch on.
- Check CMP sensor supply voltage between sensor connector E-007, terminal 3 and ground in the sensor electrical connector.
- 12 V should exist.

Is the check result normal?

Yes >> Go to step 5.

No >> Go to the next step.

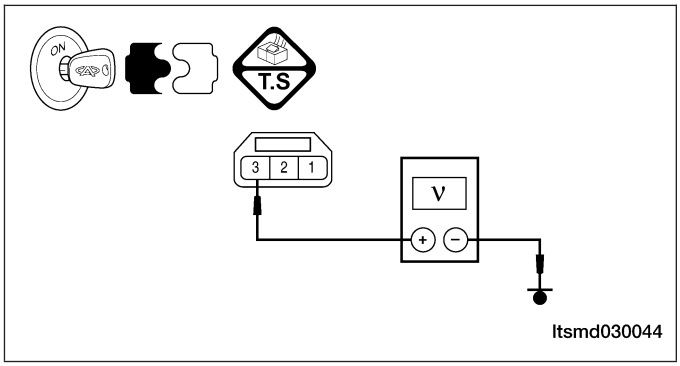

4. DETECT MALFUNCTIONING PART

- Check the following:
  - Harness connectors A-102, E-105
  - Front fuse and relay box F3
  - Fuse 12, fuse 23, fuse 24
  - Harness for an open or short between CMP sensor and fuse

Is the check result normal?

Yes >> Go to the next step.

No >> Repair or replace malfunctioning part.

Downloaded from www.Manualslib.com manuals search engine

5. CHECK THE CMP SENSOR GROUND CIRCUIT FOR AN OPEN OR SHORT

- Turn ignition switch off.
- Check harness continuity between CMP sensor terminal 1 and ground.
- Continuity should exist.
- Also check harness for a short to power.

Is the check result normal?

Yes >> Go to the next step.

No >> Repair or replace circuit for an open or short to power in harness or connectors.

6. CHECK THE CMP SENSOR SIGNAL CIRCUIT FOR AN OPEN OR SHORT TO POWER

- Turn ignition switch on.
- Check voltage between CMP sensor terminal 2 and ground.
- 10 V should exist.

Is the check result normal?

Yes >> Go to the next step.

No >> Repair or replace circuit for an open or short to power in harness or connectors.
If circuit is normal, go to the next step.

7. CHECK CMP SENSOR SIGNAL

- Connect CMP sensor connector.
- Check signal voltage between CMP sensor terminal 2 and ground when engine is running.
- Approximately 6 V square wave signal should exist.

	CMP SENSOR SIGNAL
ENGINE ANALYZER (KES-200)	vismd030003

Is the CMP output signal normal?

Yes >> Go to step 10.

No >> Go to the next step.

Downloaded from www.Manualslib.com manuals search engine

8. CHECK THE CMP SENSOR

- Turn ignition switch off.
- Disconnect CMP sensor connector.
- Check resistance as table shown.
- Remove the sensor.
- Visually check and clean the sensor for chipping.

TERMINAL NO.	RESISTANCE Ω (25°C)
1 & 2	Except 0 or ∞
1 & 3	
2 & 3	

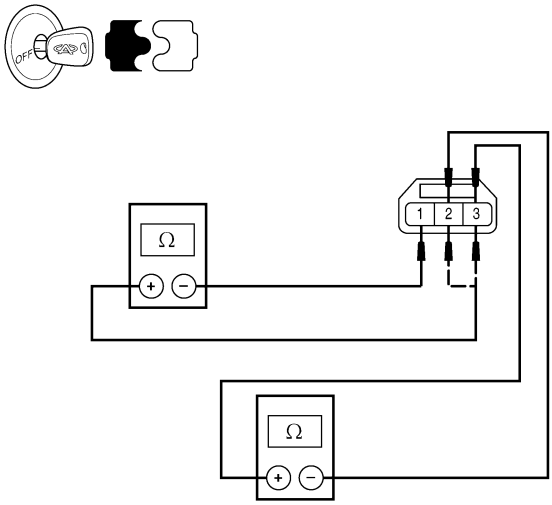

Is the check result normal?

Yes >> Replace the CMP sensor with a known good CMP sensor.
Monitor the CMP sensor signal on the KES-200 screen.
– If the CMP sensor signals were normal, the system is OK.
– If the CMP sensor signals were still irregular or missing, go to step 9.

No >> Replace CMP sensor.

9. CHECK INSTALLED CLEARANCE

- Check the installed clearance (See CMP Sensor Removal & Installation in Section 03 Electronic Engine Controls).
- 0.8 - 1.2 mm should exist.

Is the check result normal?

Yes >> Go to the next step.

No >> Reinstall CMP sensor.

Downloaded from www.Manualslib.com manuals search engine

10. CHECK CAMSHAFT

- Check the following:
  - Accumulation of debris to the signal plate of camshaft rear end
  - Chipping signal plate of camshaft rear end

Is the check result normal?

Yes >> Go to the next step.

No >> Remove debris and clean the signal plate of camshaft rear end or replace camshaft.

11. CHECK DTC

- With the X-431 scan tool, read ECM DTCs.
- Refer to ″DTC Confirmation Procedure″.

Is DTC P0343 still present?

Yes >> Replace the ECM.

NOTE : The Immobilizer control module must be matched to the new ECM (See ECM Removal & Installation in Section 03 Electronic Engine Controls).

No >> The system is now operating properly.
Reassemble the vehicle and road test to verify the customers complaint is repaired.

Downloaded from www.Manualslib.com manuals search engine

P0444 - Evaporative Emission System Purge Control Valve Circuit Open

EEC - 2.0L - EVAP - 01

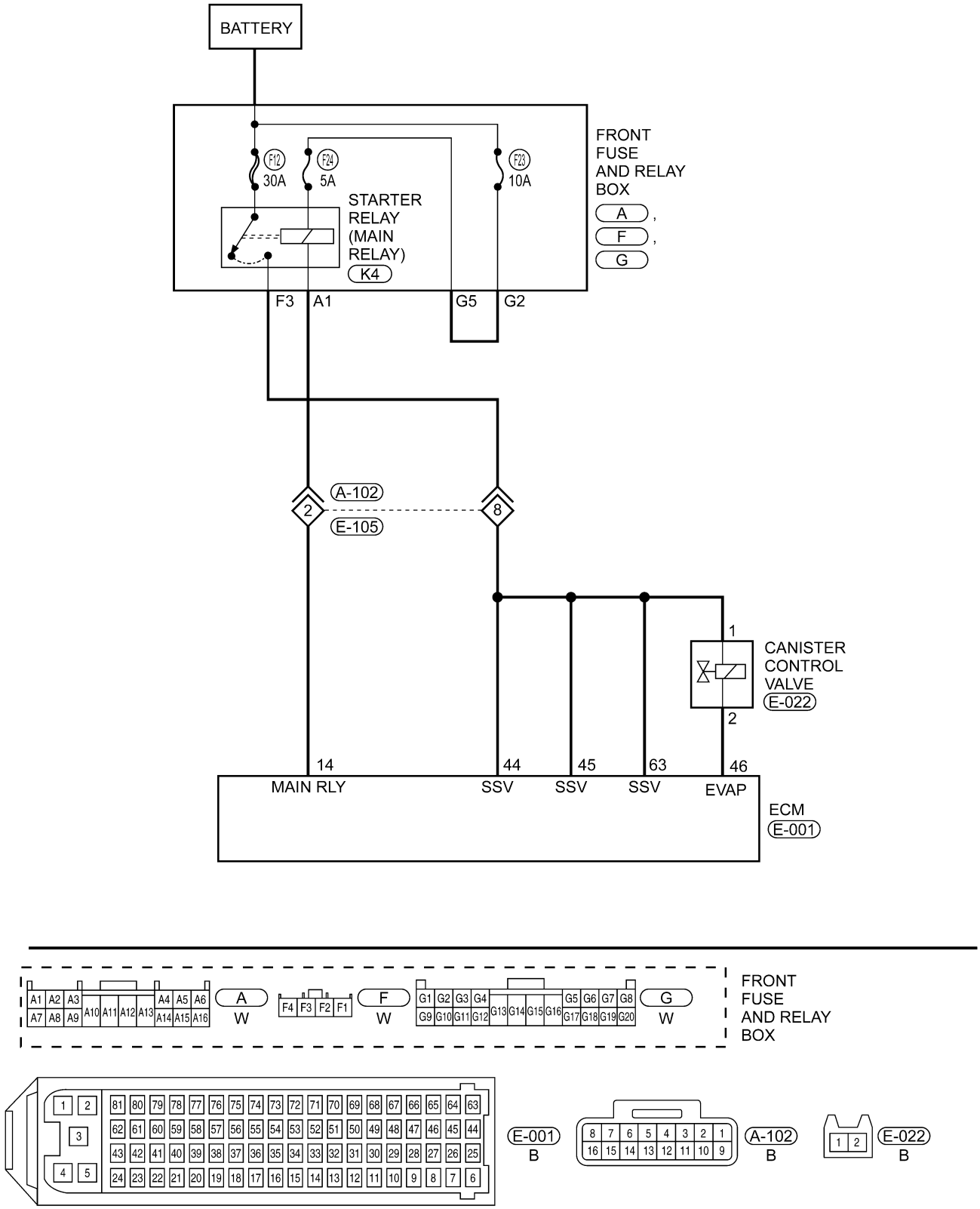

ltsmw030031t

Downloaded from www.Manualslib.com manuals search engine

Check reference values between ECM terminals and ground under the following conditions:

ECM TERMINAL NO.	ITEM	CONDITION	X-431 DATA STREAM
46	Canister control valve	Engine is running	0 % - 99.9 %

On Board Diagnostic Logic

- Self-diagnosis detection logic.

DTC NO.	DTC DEFINITION	DTC DETECTION CONDITION	DTC SET CONDITION	POSSIBLE CAUSE
P0444	Evaporative emission system purge control valve circuit open	Engine is running	ECM detected that the improper voltage signal is sent to ECM.	• EVAP canister control valve • Harness or connectors • ECM

DTC Confirmation Procedure:

Before performing the following procedure, confirm that battery voltage is more than 12 V.

- Turn ignition switch off.
- Connect the X-431 scan tool to the Data Link Connector (DLC) - use the most current software available.
- Turn ignition switch on.
- With the scan tool, record and erase stored DTCs in the ECM.
- Start engine and warm it up to the normal operating temperature then select view DTC.
- If DTC is detected, go to Diagnostic Procedure - Step 1.
- If the DTC is not detected, the DTC condition is intermittent (See Diagnosis & Testing Diagnostic Help in Section 03 Electronic Engine Controls).

NOTE :
While performing electrical diagnosis & testing, always refer to the electrical schematics for specific circuit and component information.

Diagnostic Procedure

1. CHECK GROUND CONNECTIONS

- Turn ignition switch off.
- Loosen and retighten ground screws on the body (See Ground Inspection in Section 03 Electronic Engine Controls).
- Inspect ground connections E-207 and E-208 mounting position (See Vehicle Wiring Harness Layout - Engine Room Harness (With 2.0L Engine) in Section 16 Wiring).

Are the ground connections OK?

Yes >> Go to the next step.

No >> Repair or replace ground harness or connections.

Downloaded from www.Manualslib.com manuals search engine

2. CHECK EVAP CANISTER CONTROL VALVE ACTION

- Start engine and warm it up to the normal operating temperature then select view DTC.
- Touch the EVAP canister valve body, raise engine speed up to 2,000 RPM.
- If the scan tool X-431 with the ″ACTIVE TEST″ function of the EVAP canister valve, touch the EVAP canister valve body, perform the action test.
- Slight vibration and concussion should exist.

Is the check result normal?

Yes >> Go to step 8.

No >> Go to the next step.

3. CHECK THE EVAP CANISTER CONTROL VALVE ELECTRICAL CONNECTOR

- Turn ignition switch off.
- Disconnect the EVAP canister control valve (1) electrical connector.
- Inspect the electrical connector for damage.

Is the electrical connector OK?

Yes >> Go to the next step.

No >> Repair or replace the electrical connector as necessary.

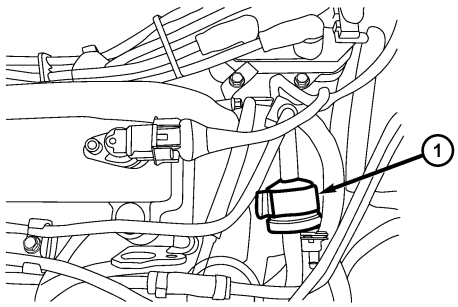

vismd030007

4. CHECK EVAP CANISTER CONTROL VALVE POWER SUPPLY CIRCUIT

- Turn ignition switch on.
- Check supply voltage between EVAP canister control valve terminal 1 and ground.
- 12 V should exist.

Is the check result normal?

Yes >> Go to step 7.

No >> Go to the next step.

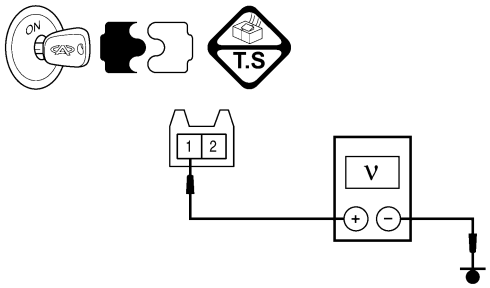

ltsmd030046

Downloaded from www.Manualslib.com manuals search engine

5. DETECT MALFUNCTIONING PART

- Check the following:
  - Harness connectors A-102, E-105
  - Front fuse and relay box
  - Fuse 23, fuse 24, fuse 12
  - Harness between EVAP canister control valve and fuse

Is the check result normal?

Yes >> Go to the next step.

No >> Repair or replace malfunctioning part.

6. CHECK EVAP CANISTER CONTROL VALVE CONTROL CIRCUIT FOR AN OPEN

- Check voltage between EVAP canister control valve terminal 2 and ground.
- Approximately 3.6 V should exist.

Is the check result normal?

Yes >> Go to the next step.

No >> Repair or replace circuit for an open in harness or connectors.
If harness is normal, go to the next step.

7. CHECK EVAP CANISTER CONTROL VALVE

- Turn ignition switch off.
- Remove EVAP canister control valve.
- Check resistance between EVAP canister terminal 1 and 2 as shown in table.

EVAP CANISTER CONTROL VALVE TERMINAL NO.	RESISTANCE Ω (20°C)	
1 - 2	Approximately 26 Ω	

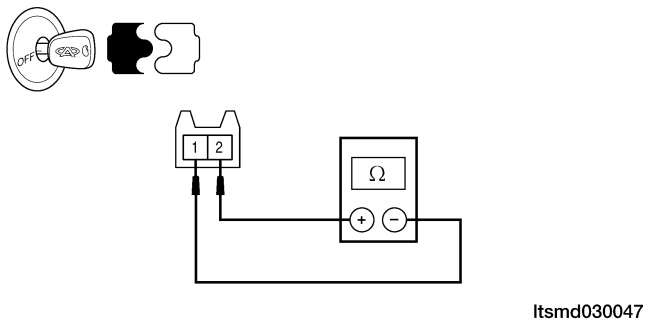

- Check air passage continuity and operation when apply 12 V current supply voltage between terminal 1 and 2.
- The check results should match specification.

Is the check result normal?

Yes >> Go to the next step.

No >> Repair or replace EVAP canister control valve.

Downloaded from www.Manualslib.com manuals search engine

8. CHECK DTC

- With the X-431 scan tool, read ECM DTCs.
- Refer to ″DTC Confirmation Procedure″.

Is DTC P0444 still present?

Yes >> Replace the ECM.

NOTE : The Immobilizer control module must be matched to the new ECM (See ECM Removal & Installation in Section 03 Electronic Engine Controls).

No >> The system is now operating properly.
Reassemble the vehicle and road test to verify the customers complaint is repaired.

Downloaded from www.Manualslib.com manuals search engine

P0506 - Idle Control System RPM Lower Than Expected

On Board Diagnostic Logic

- Self-diagnosis detection logic.
- If DTC P0506 is displayed with other DTC, first perform the trouble diagnosis for the other DTC.

DTC NO.	DTC DEFINITION	DTC DETECTION CONDITION	DTC SET CONDITION	POSSIBLE CAUSE
P0506	Idle control system RPM lower than expected	• Engine is running • With the engine idling in drive, the brake applied, engine run time below a calibrated minimum value, and no VSS, MAF/MAP, ECT, TPS, ETC, Crankshaft Position sensor, fuel system, or injector DTCs present.	ECM detected that the idle speed is less than the acceptable range.	• Electronic throttle control actuator • Intake air leak • ECM

DTC Confirmation Procedure:

Before performing the following procedure, confirm that battery voltage is more than 12 V.

- Turn ignition switch off.
- Connect the X-431 scan tool to the Data Link Connector (DLC) - use the most current software available.
- Turn ignition switch on.
- With the scan tool, record and erase stored DTCs in the ECM.
- Start engine and warm it up to the normal operating temperature then select view DTC.
- If DTC is detected, go to Diagnostic Procedure - Step 1.
- If the DTC is not detected, the DTC condition is intermittent (See Diagnosis & Testing Diagnostic Help in Section 03 Electronic Engine Controls).

NOTE :
While performing electrical diagnosis & testing, always refer to the electrical schematics for specific circuit and component information.

Downloaded from www.Manualslib.com manuals search engine

Diagnostic Procedure

1. CHECK INTAKE AIR LEAK

- Start engine and let it idle.
- Listen for an intake air leak after the mass air flow sensor.

Is the check result normal?

Yes >> Go to the next step.

No >> Discover air leak location and repair.

2. CHECK THE ELECTRIC THROTTLE CONTROL ACTUATOR

- Check the electronic throttle open degree.
- Check the electronic throttle clearance.

Is the check result normal?

Yes >> Go to the next step.

No >> Clean or replace as necessary.

3. CHECK DTC

- With the X-431 scan tool, read ECM DTCs.
- Refer to ″DTC Confirmation Procedure″.

Is DTC P0506 still present?

Yes >> Replace the ECM.

NOTE : The Immobilizer control module must be matched to the new ECM (See ECM Removal & Installation in Section 03 Electronic Engine Controls).

No >> The system is now operating properly.
Reassemble the vehicle and road test to verify the customers complaint is repaired.

Downloaded from www.Manualslib.com manuals search engine

P0604 - Internal Controller Module Random Access Memory (RAM) Error
P0605 - Internal Controller Module ROM Test Error
P0606 - ECM Processor

On Board Diagnostic Logic

- Self-diagnosis detection logic.

DTC NO.	DTC DEFINITION	DTC DETECTION CONDITION	POSSIBLE CAUSE
P0604	Internal controller module Random Access Memory (RAM) error	ECM detected an internal failure	ECM
P0605	Internal controller module ROM test error		
P0606	ECM processor		

DTC Confirmation Procedure:

Before performing the following procedure, confirm that battery voltage is more than 12 V.

- Turn ignition switch off.
- Connect the X-431 scan tool to the Data Link Connector (DLC) - use the most current software available.
- Turn ignition switch on.
- With the scan tool, record and erase stored DTCs in the ECM.
- Start the engine and warm it to normal operating temperature.
- With the scan tool, select view DTC and data stream.
- If the DTC is detected, the DTC condition is current. Go to Diagnostic Procedure - Step 1.
- If the DTC is not detected, the DTC condition is intermittent (See Diagnostic Help and Intermittent DTC Troubleshooting in Section 03 Electronic Engine Controls for more information.

NOTE :
While performing electrical diagnosis & testing, always refer to the electrical schematics for specific circuit and component information.

Downloaded from www.Manualslib.com manuals search engine

Diagnostic Procedure

1. CHECK DTC

- Perform DTC confirmation procedure.

Is DTC P0604, P0605 or P0606 present?

Yes >> Go to the next step.

No >> The DTC condition is intermittent (See Diagnostic Help in Section 03 Electronic Engine Controls).

2. CHECK ECM POWER SUPPLY AND GROUND

- Check if the ECM supply voltage circuit, ground circuit open, high resistance or short circuits existing.

Is the check result normal?

Yes >> Go to the next step.

No >> Repair or replace circuit for open or short in harness and connectors.

3. CHECK DTC

- With the X-431 scan tool, read ECM DTCs.
- Refer to ″DTC Confirmation Procedure″.

Is the check result normal?

Yes >> The system is now operating properly.
Reassemble the vehicle and road test to verify the customers complaint is repaired.

No >> Replace the ECM.

NOTE : The Immobilizer control module must be matched to the new ECM (See ECM Removal & Installation in Section 03 Electronic Engine Controls).

Downloaded from www.Manualslib.com manuals search engine

P0602 - ECM Programming Error

On Board Diagnostic Logic

- Self-diagnosis detection logic.

DTC NO.	DTC DEFINITION	POSSIBLE CAUSE
P0602	ECM programming error	ECM

DTC Confirmation Procedure:

Before performing the following procedure, confirm that battery voltage is more than 12 V.

- Turn ignition switch off.
- Connect the X-431 scan tool to the Data Link Connector (DLC) - use the most current software available.
- Turn ignition switch on.
- With the scan tool, record and erase stored DTCs in the ECM.
- Start the engine and warm it to normal operating temperature.
- With the scan tool, select view DTC and data stream.
- If the DTC is detected, the DTC condition is current. Go to Diagnostic Procedure - Step 1.
- If the DTC is not detected, the DTC condition is intermittent (See Diagnostic Help and Intermittent DTC Troubleshooting in Section 03 Electronic Engine Controls for more information.

NOTE :
While performing electrical diagnosis & testing, always refer to the electrical schematics for specific circuit and component information.

Downloaded from www.Manualslib.com manuals search engine

Diagnostic Procedure

1. CHECK DTC

- Perform DTC confirmation procedure.

Is DTC P0602 present?

Yes >> Go to the next step.

No >> The DTC condition is intermittent (See Diagnostic Help in Section 03 Electronic Engine Controls).

2. CHECK THE ECM POWER SUPPLY AND GROUND

- Check if the ECM supply voltage circuit, ground circuit open, high resistance or short circuits existing.

Is the check result normal?

Yes >> Go to the next step.

No >> Repair or replace circuit for an open or short in harness and connectors.

3. MATCH ECM

With the scan tool X-431, match ECM before replace it (See ECM Removal & Installation in Section 03 Electronic Engine Controls), and view the DTC with the X-431.

Is DTC P0602 setting again?

Yes >> Go to the next step.
Refer to Technical Bulletin that issued.

No >> The system is now operating properly.
Reassemble the vehicle and road test to verify the customers complaint is repaired.

4. CHECK DTC

- With the X-431 scan tool, read ECM DTCs.
- See DTC Confirmation Procedure.

Is DTC P0602 still present?

Yes >> Replace the ECM.

NOTE : The Immobilizer control module must be matched to the new ECM (See ECM Removal & Installation in Section 03 Electronic Engine Controls).

No >> The system is now operating properly.
Reassemble the vehicle and road test to verify the customers complaint is repaired.

Downloaded from www.Manualslib.com manuals search engine

P0645 - A/C Clutch Relay Circuit

EEC - 2.0L - A/C - 01

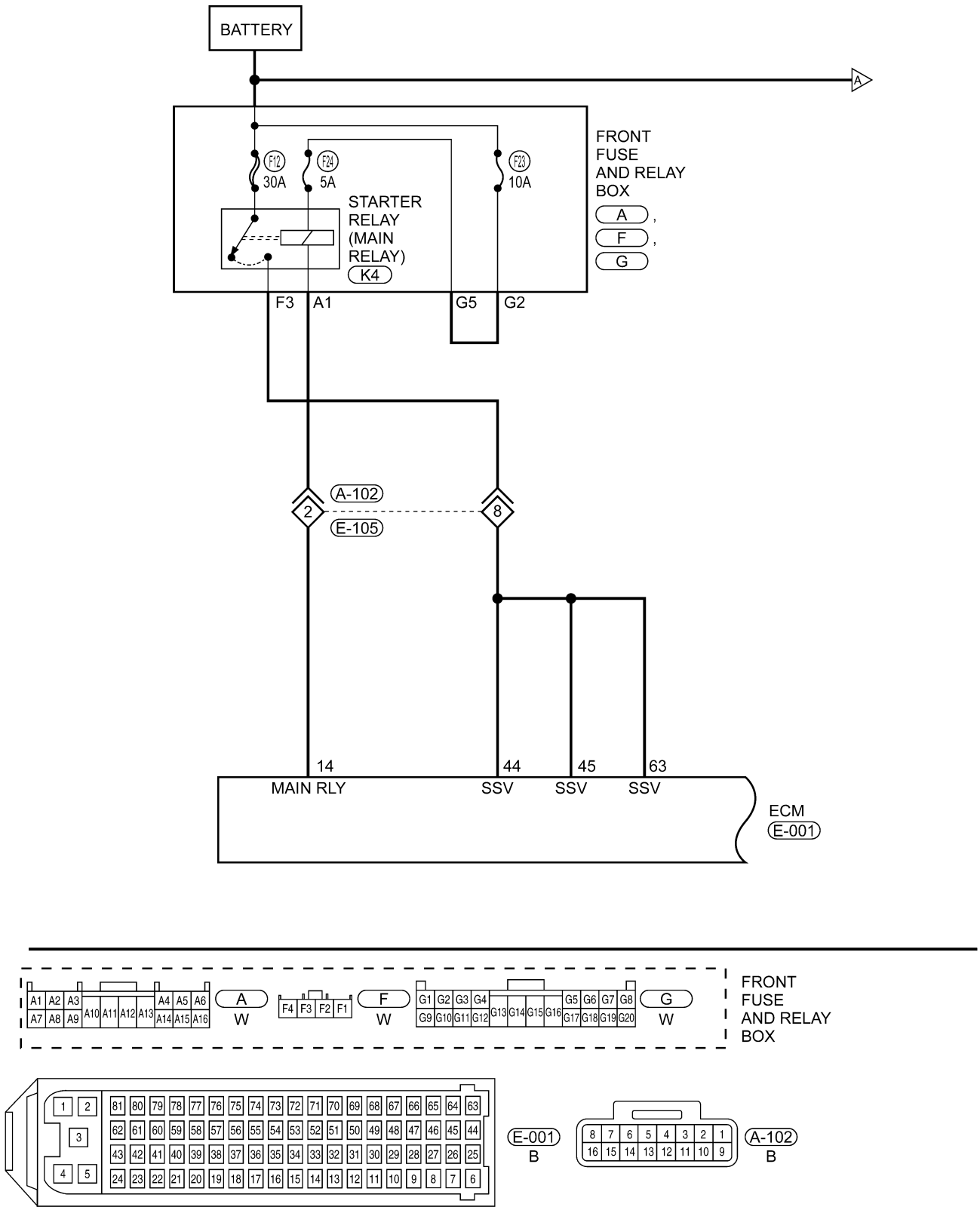

ltsmw030063t

Downloaded from www.Manualslib.com manuals search engine

EEC - 2.0L - A/C - 02

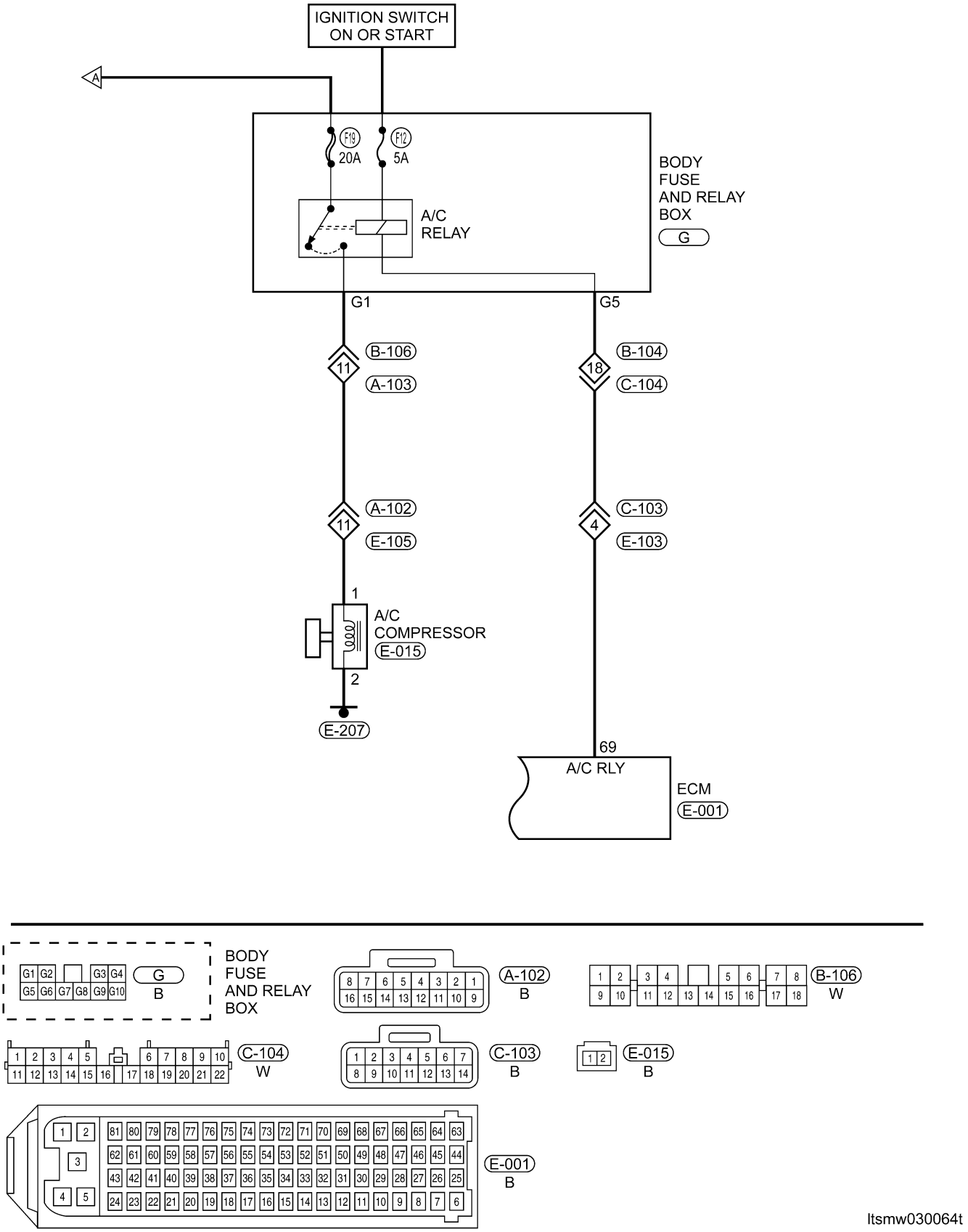

Downloaded from www.Manualslib.com manuals search engine

Check reference values between ECM terminals and ground under the following conditions:

ECM TERMINAL NO.	ITEM	CONDITION	DATA (AVERAGE DC VOLTAGE)
69	Air Condition (A/C) relay control signal	• After engine is started for 5 seconds, A/C can be turned on. • If IAT above 140.3 , A/C will be shut off. • If ECT is above 140.3°C, A/C will be shut off. If ECT is below 111.8°C, A/C will be resume. • If A/C high pressure is above 20 bar, A/C will be shut off. If A/C high pressure is below 19.5 bar, A/C will be resume. • If evaporator temperature is below 1.5°C, A/C will be shut off. If evaporator temperature is above 4.5°C, A/C will be resume. • If system voltage is below 8.04 V, A/C will be shut off. If system voltage is above 10.01 V, A/C will be resume.	0 V or 12 V

On Board Diagnostic Logic

- Self-diagnosis detection logic.

DTC NO.	DTC DEFINITION	DTC DETECTION CONDITION	DTC SET CONDITION	POSSIBLE CAUSE
P0645	A/C clutch relay circuit	Engine is running	ECM detected that the input signal is out of the acceptable range.	• Fuse • A/C relay • Harness or connectors • ECM

DTC Confirmation Procedure:

Before performing the following procedure, confirm that battery voltage is more than 12 V.

- Turn ignition switch off.
- Connect the X-431 scan tool to the Data Link Connector (DLC) - use the most current software available.
- Turn ignition switch on.
- With the scan tool, record and erase stored DTCs in the ECM.
- Start engine and warm it to normal operating temperature.
- Turn A/C switch on, then select view DTC and data stream.
- If the DTC is detected, the DTC condition is current. Go to Diagnostic Procedure - Step 1.
- If the DTC is not detected, the DTC condition is intermittent (See Diagnostic Help and Intermittent DTC Troubleshooting in Section 03 Electronic Engine Controls for more information.

NOTE :

While performing electrical diagnosis & testing, always refer to the electrical schematics for specific circuit and component information.

Downloaded from www.Manualslib.com manuals search engine

Diagnostic Procedure

1. CHECK GROUND CONNECTIONS

- Turn ignition switch off.
- Loosen and retighten ground screws on the body (See Ground Inspection in Section 03 Electronic Engine Controls).
- Inspect ground connections E-207 and E-208 mounting position (See Vehicle Wiring Harness Layout - Engine Room Harness (With 2.0L Engine) in Section 16 Wiring).

Are the ground connections OK?

Yes >> Go to the next step.

No >> Repair or replace ground harness or connections.

2. CHECK AIR CONDITION CLUTCH RELAY CONTROL CIRCUIT POWER SUPPLY CIRCUIT FOR OPEN

- Turn ignition switch on.
- Turn A/C switch off.
- Check A/C clutch relay control circuit supply voltage between ECM terminal 69 and ground in the ECM electrical connector E-001.
- 12 V should exist.

Is the check result normal?

Yes >> Go to step 4.

No >> Go to the next step.

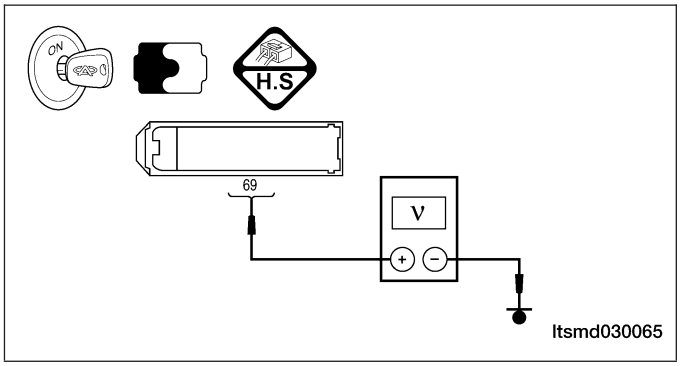

3. DETECT MALFUNCTIONING PART

- Check the following:
  - Fuse 12
  - A/C relay
  - Body fuse and relay box G5
  - Harness connectors C-103, E-103, B-104, C-104
  - Harness for open between ECM terminal 69 and fuse 12

Is the check result normal?

Yes >> Go to the next step.

No >> Repair or replace malfunctioning part.

Downloaded from www.Manualslib.com manuals search engine

4. CHECK DTC

- With the X-431 scan tool, read ECM DTCs.
- Refer to ″DTC Confirmation Procedure″.

Is DTC P0645 still present?

Yes >> Replace the ECM.

NOTE : The Immobilizer control module must be matched to the new ECM (See ECM Removal & Installation in Section 03 Electronic Engine Controls).

No >> The system is now operating properly.
Reassemble the vehicle and road test to verify the customers complaint is repaired.

Downloaded from www.Manualslib.com manuals search engine

P1545 - Throttle Position Control Performance

EEC - 2.0L - TPS - 01

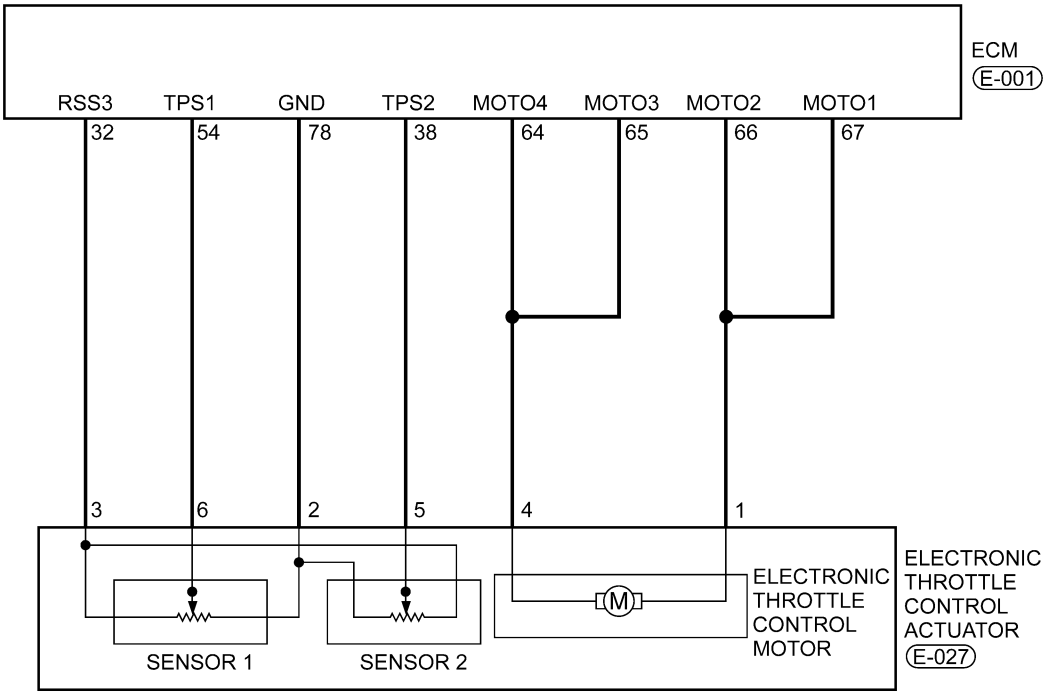

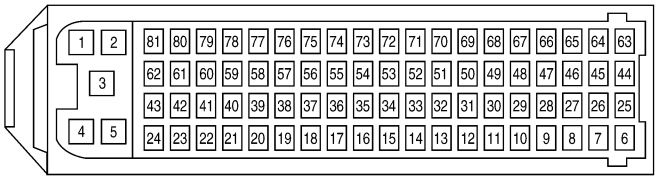

E-001
B

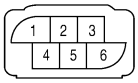

E-027
B

ltsmw030025t

Downloaded from www.Manualslib.com manuals search engine

EEC - 2.0L - APS - 01

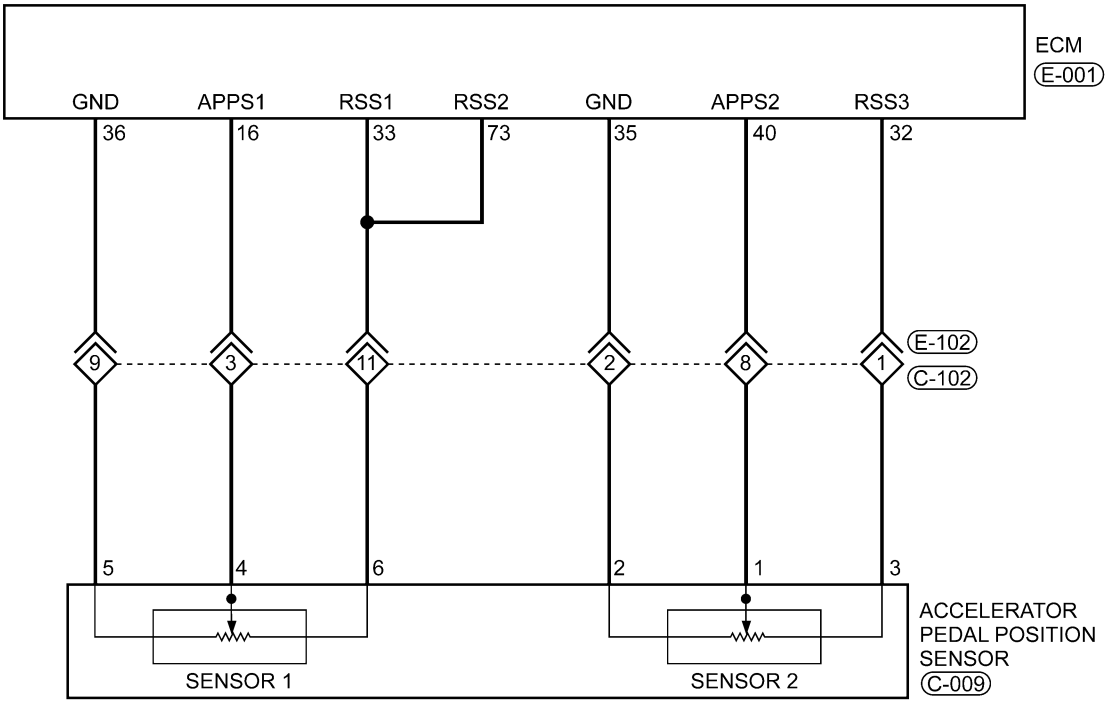

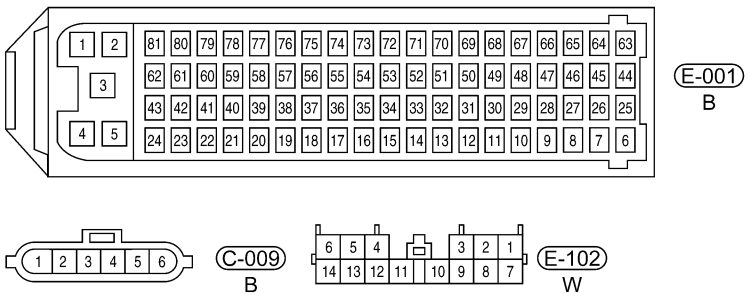

ltsmw030026t

Downloaded from www.Manualslib.com manuals search engine

Check reference values between ECM terminals and ground under the following conditions:

ECM TERMINAL NO.	ITEM	CONDITION		DATA (DC VOLTAGE)
32	Regulated sensor supply 2	Ignition switch: ON -	-	Approximately 5 V
38	Electronic throttle control actuator (position sensor)		• Engine stopped • Accelerator pedal: Fully released	4.24 V
			• Engine stopped • Accelerator pedal: Fully depressed	0.72 V
54	Electronic throttle control actuator		• Engine stopped • Accelerator pedal: Fully released	0.74 V
			• Engine stopped • Accelerator pedal: Fully depressed	4.62 V
64	Motor 4		-	12 or 0 V
65	Motor 3			
66	Motor 2			12 or 0 V
67	Motor 1			
78	Sensor (GND)			Approximately 0 V

On Board Diagnostic Logic

- Self-diagnosis detection logic.

DTC NO.	DTC DEFINITION	DTC DETECTION CONDITION	DTC SET CONDITION	POSSIBLE CAUSE
P1545	Throttle position control performance	• Ignition switch: ON • Engine: Running	Rationally incorrect voltage is sent to ECM compared with the signals from TPS1 and TPS2.	• Electronic throttle control actuator (TPS1 and TPS2) • Harness or connectors • Accelerator pedal position sensor 2 • ECM

DTC Confirmation Procedure:

Before performing the following procedure, confirm that battery voltage is more than 12 V.

- Turn ignition switch off.
- Connect the X-431 scan tool to the Data Link Connector (DLC) - use the most current software available.
- Turn ignition switch on.
- With the scan tool, record and erase stored DTCs in the ECM.
- Start engine and warm it to normal operating temperature, then select view DTC and data stream.
- If the DTC is detected, the DTC condition is current. Go to Diagnostic Procedure - Step 1.
- If the DTC is not detected, the DTC condition is intermittent (See Diagnostic Help and Intermittent DTC Troubleshooting in Section 03 Electronic Engine Controls for more information.

NOTE :

While performing electrical diagnosis & testing, always refer to the electrical schematics for specific circuit and component information.

Downloaded from www.Manualslib.com manuals search engine

Diagnostic Procedure

1. CHECK GROUND CONNECTIONS

- Turn ignition switch off.
- Loosen and retighten ground screws on the body (See Ground Inspection in Section 03 Electronic Engine Controls).
- Inspect ground connections E-207 and E-208 mounting position (See Vehicle Wiring Harness Layout - Engine Room Harness (With 2.0L Engine) in Section 16 Wiring).

Are the ground connections OK?

Yes >> Go to the next step.

No >> Repair or replace ground harness or connections.

2. CHECK THE TPS ELECTRICAL CONNECTOR

- Disconnect the TPS electrical connector (1).
- Inspect the electrical connector for damage.

Is the electrical connector OK?

Yes >> Go to the next step.

No >> Repair or replace the electrical connector as necessary.

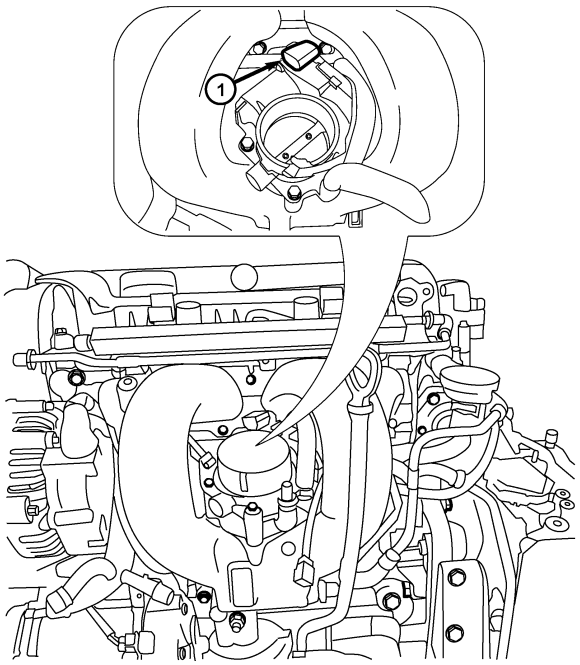

vismd030203

Downloaded from www.Manualslib.com manuals search engine

3. CHECK THE TPS POWER SUPPLY CIRCUIT - (1)

- Turn ignition switch on.
- Check TPS supply voltage between sensor terminal 3 and ground in the sensor electrical connector E-027.
- Approximately 5 V should exist.

Is the check result normal?

Yes >> Go to step 8.

No >> Go to the next step.

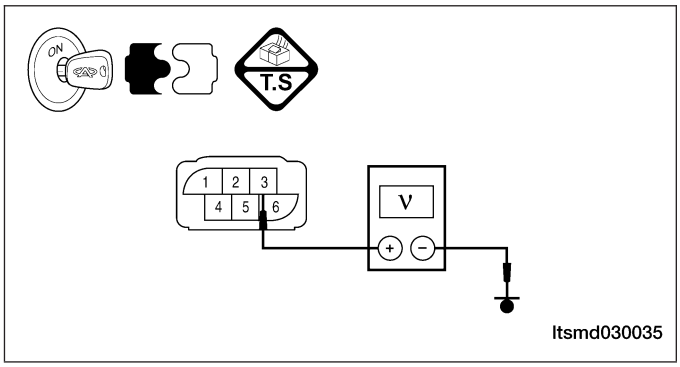

4. CHECK THE TPS POWER SUPPLY CIRCUIT - (2)

- Disconnect ECM harness connector (1).

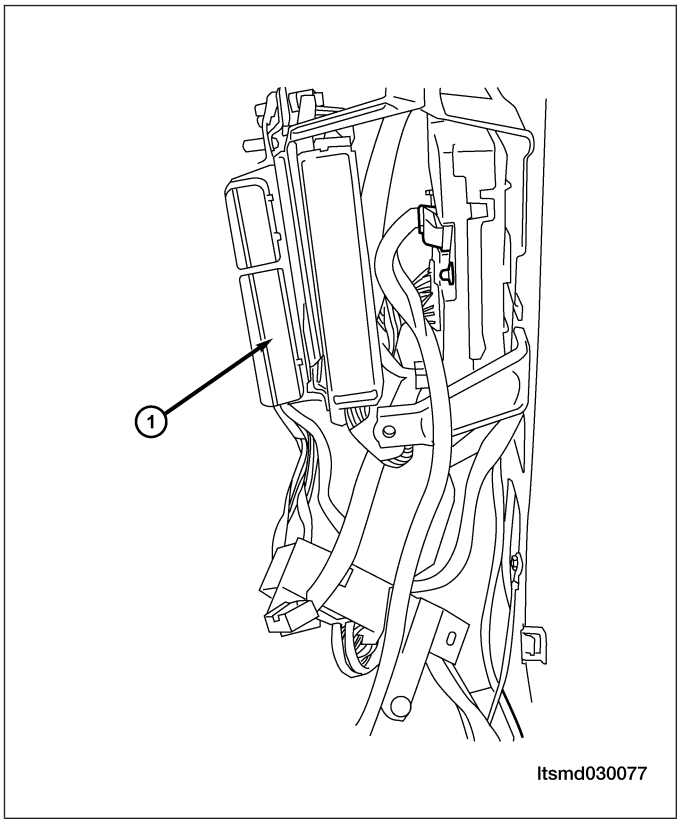

- Turn ignition switch off.
- Check harness continuity between TPS terminal 3 and ECM terminal 32.
- Continuity should exist.

Is the check result normal?

Yes >> Go to the next step.

No >> Repair or replace circuit for an open.

Downloaded from www.Manualslib.com manuals search engine

5. CHECK THE TPS POWER SUPPLY CIRCUIT - (3)

- Check harness for short to power and short to ground, between following terminals.

ECM TERMINAL	TPS TERMINAL
32	TPS terminal 3
32	APP sensor terminal 3
33	APP sensor terminal 6

Is the check result normal?

Yes >> Go to the next step.

No >> Repair or replace circuit for a short to ground or short to power in harness or connectors.

6. CHECK THE APP SENSOR

- Connect all harness connectors disconnected.
- Turn ignition switch on.
- Check voltage between ECM terminals 16 (APP sensor 1) and ground, terminal 40 (APP sensor 2) and ground under the following conditions:

ECM TERMINAL	APP SENSOR TERMINAL	
16	APP sensor terminal 4	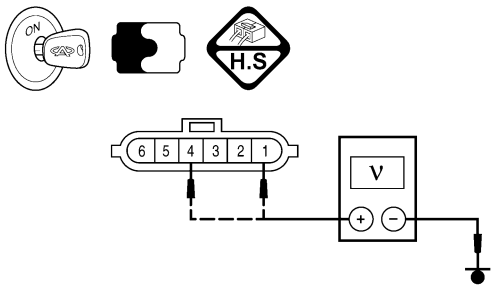
40	APP sensor terminal 1	ltsmd030037

TERMINAL NO.	ITEM	CONDITION		DATA (DC VOLTAGE)
16	Accelerator pedal position sensor	Turn ignition switch on	• Engine stopped • Accelerator pedal: Fully released	0.72 - 0.74 V
			• Engine stopped • Accelerator pedal: Fully depressed	3.95 V
40	Accelerator pedal position sensor		• Engine stopped • Accelerator pedal: Fully released	0.36 - 0.37 V
			• Engine stopped • Accelerator pedal: Fully depressed	1.97 V

Downloaded from www.Manualslib.com manuals search engine

Is the check result normal?

Yes >> Go to step 10.

No >> Replace the Accelerator Pedal Assembly (See Accelerator Pedal Position Sensor Removal & Installation in Section 03 Electronic Engine Controls).

7. CHECK THE TPS SIGNAL CIRCUIT FOR OPEN AND SHORT

- Turn ignition switch off.
- Disconnect ECM harness connector.
- Check harness continuity between electronic throttle control actuator terminal 5 and ECM terminal 38, electronic throttle control actuator terminal 6 and ECM terminal 54.
- Continuity should exist.
- Also check harness for short to power and short to ground.

Is the check result normal?

Yes >> Go to the next step.

No >> Repair circuit for an open or short to power or short to ground in harness or connectors.

8. CHECK THE TPS GROUND CIRCUIT FOR AN OPEN AND SHORT

- Check harness continuity between electronic throttle control actuator terminal 2 and ECM terminal 78.
- Continuity should exist.
- Also check harness for short to power and short to ground.

Is the check result normal?

Yes >> Go to the next step.

No >> Repair circuit for an open or short to power in harness or connectors.

Downloaded from www.Manualslib.com manuals search engine

9. CHECK TPS

- Connect all harness connectors disconnected.
- Turn ignition switch on.
- Check voltage between ECM terminals 54 (TPS1) and ground, terminal 38 (TPS2) and ground under the following conditions:

TPS TERMINAL NO.	ITEM	CONDITION		DATA (DC VOLTAGE)
5	Electronic throttle control actuator (TPS2)	Ignition switch: ON	• Engine stopped • Accelerator pedal: Fully released	4.24 V
			• Engine stopped • Accelerator pedal: Fully depressed	0.72 V
6	Electronic throttle control actuator (TPS1)		• Engine stopped • Accelerator pedal: Fully released	0.74 V
			• Engine stopped • Accelerator pedal: Fully depressed	4.62 V

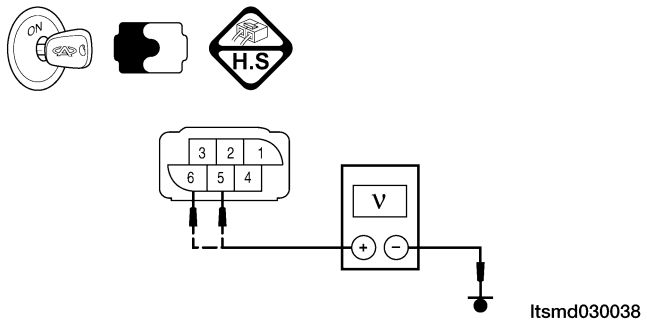

Is the check result normal?

Yes >> Go to the next step.

No >> Replace electronic throttle control actuator, and perform throttle valve position learning.

10. CHECK DTC

- With the X-431 scan tool, read ECM DTCs.
- See DTC Confirmation Procedure.

Is DTC P1545 still present?

Yes >> Replace the ECM.

NOTE : The Immobilizer control module must be matched to the new ECM (See ECM Removal & Installation in Section 03 Electronic Engine Controls).

No >> The system is now operating properly.
Reassemble the vehicle and road test to verify the customers complaint is repaired.

Downloaded from www.Manualslib.com manuals search engine

P2138 - Pedal Position Sensor Performance

EEC - 2.0L - APS - 01

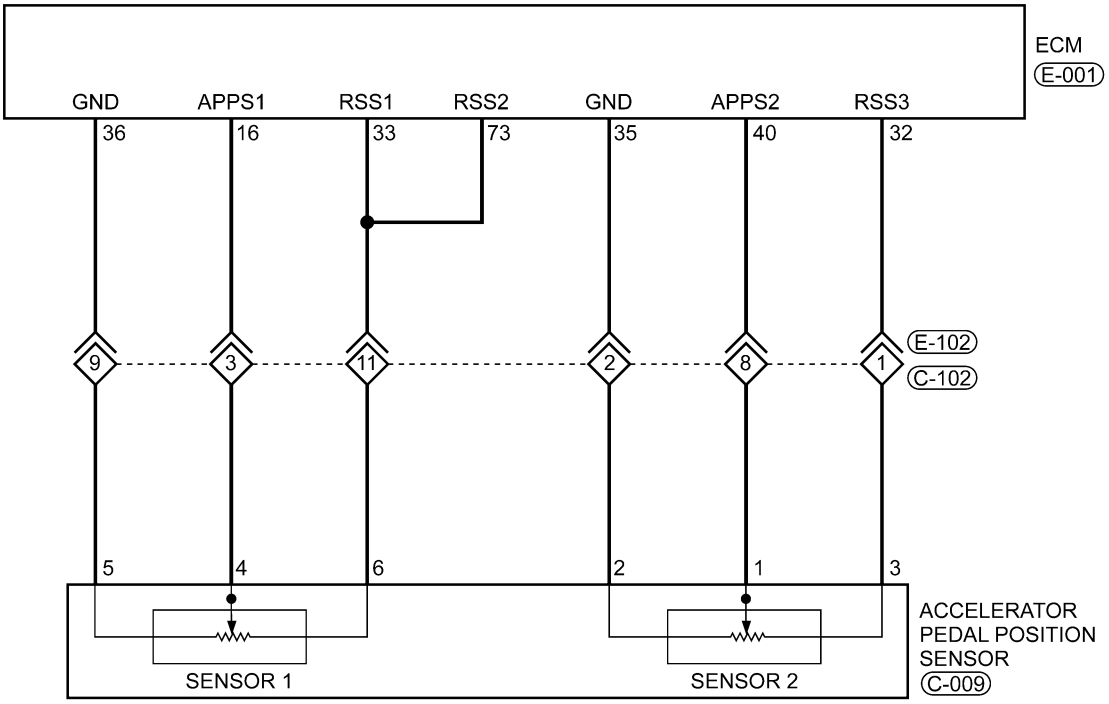

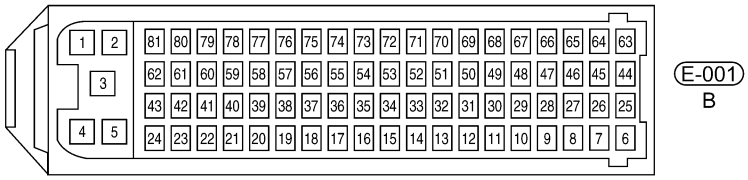

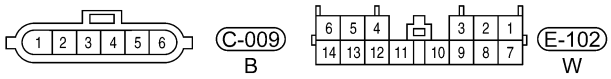

ltsmw030026t

Downloaded from www.Manualslib.com manuals search engine

EEC - 2.0L - TPS - 01

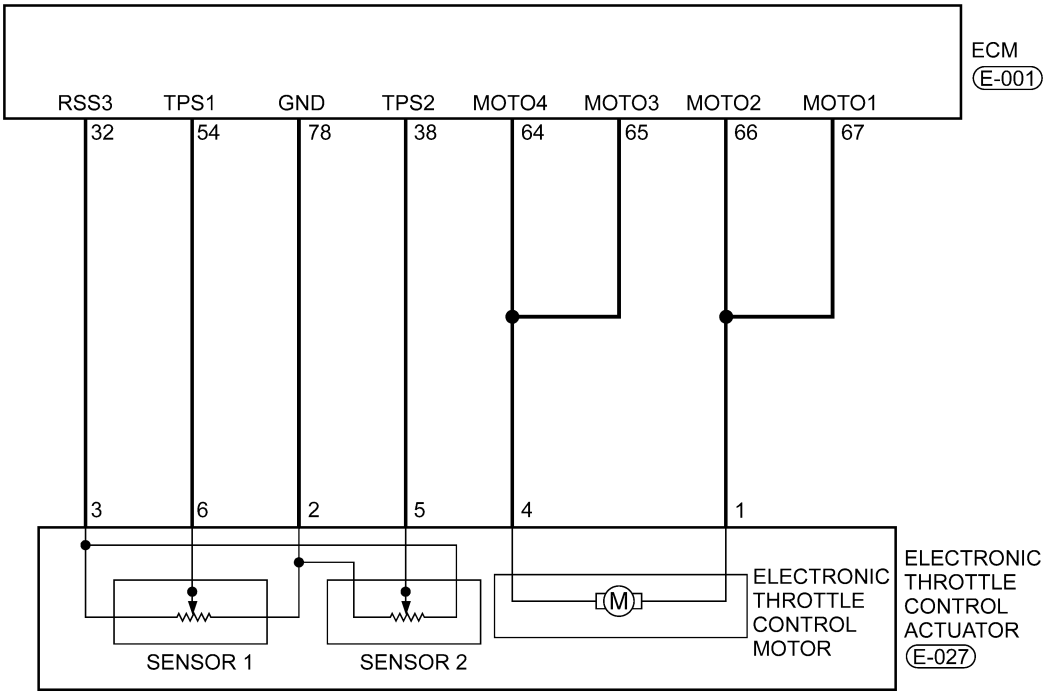

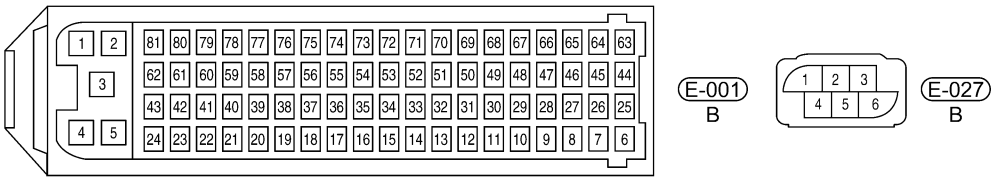

ltsmw030025t

Downloaded from www.Manualslib.com manuals search engine

Check reference values between ECM terminals and ground under the following conditions:

ECM TERMINAL NO.	ITEM	CONDITION		DATA (DC VOLTAGE)
32	Regulated sensor supply 2	Ignition switch: ON	-	Approximately 5 V
33	Regulated sensor supply 1		-	Approximately 5 V
16	Accelerator pedal position sensor		• Engine stopped • Accelerator pedal: Fully released	0.72 - 0.74 V
			• Engine stopped • Accelerator pedal: Fully depressed	3.95 V
40	Accelerator pedal position sensor		• Engine stopped • Accelerator pedal: Fully released	0.36 - 0.37 V
			• Engine stopped • Accelerator pedal: Fully depressed	1.97 V
35	Sensor (GND)		-	Approximately 0 V
36	Sensor (GND)		-	Approximately 0 V

On Board Diagnostic Logic

- Self-diagnosis detection logic.

DTC NO.	DTC DEFINITION	DTC DETECTION CONDITION	DTC SET CONDITION	POSSIBLE CAUSE
P2138	Accelerator pedal position sensor performance	• Ignition switch: ON • Engine: Running	Rationally incorrect voltage is sent to ECM compared with the signals from Accelerator Pedal Position (APP) sensor 1 and APP sensor 2.	• Accelerator pedal position sensor 1 and 2 • Harness or connectors • Electronic throttle control actuator (TPS1 and TPS2) • ECM

DTC Confirmation Procedure:

Before performing the following procedure, confirm that battery voltage is more than 12 V.

- Turn ignition switch off.
- Connect the X-431 scan tool to the Data Link Connector (DLC) - use the most current software available.
- Turn ignition switch on.
- With the scan tool, record and erase stored DTCs in the ECM.
- Start engine then select view DTC and data stream.
- If the DTC is detected, the DTC condition is current. Go to Diagnostic Procedure - Step 1.
- If the DTC is not detected, the DTC condition is intermittent (See Diagnostic Help and Intermittent DTC Troubleshooting in Section 03 Electronic Engine Controls for more information.

NOTE :

While performing electrical diagnosis & testing, always refer to the electrical schematics for specific circuit and component information.

Downloaded from www.Manualslib.com manuals search engine

Diagnostic Procedure

1. CHECK GROUND CONNECTIONS

- Turn ignition switch off.
- Loosen and retighten ground screws on the body (See Ground Inspection in Section 03 Electronic Engine Controls).
- Inspect ground connections E-207 and E-208 mounting position (See Vehicle Wiring Harness Layout - Engine Room Harness (With 2.0L Engine) in Section 16 Wiring).

Are the ground connections OK?

Yes >> Go to the next step.

No >> Repair or replace ground harness or connections.

2. CHECK THE ACCELERATOR PEDAL POSITION (APP) SENSOR ELECTRICAL CONNECTOR

- Disconnect the APP sensor electrical connector (1).
- Inspect the electrical connector for damage.

Is the electrical connector OK?

Yes >> Go to the next step.

No >> Repair or replace the electrical connector as necessary.

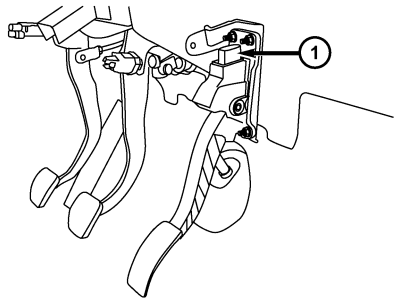

vismd030008

3. CHECK THE ACCELERATOR PEDAL POSITION (APP) SENSOR 1 POWER SUPPLY CIRCUIT

- Turn ignition switch on.
- Check APP sensor 1 supply voltage between sensor terminal 6 and ground in the sensor electrical connector C-009.
- Approximately 5 V should exist.

Is the check result normal?

Yes >> Go to step 5.

No >> Go to the next step.

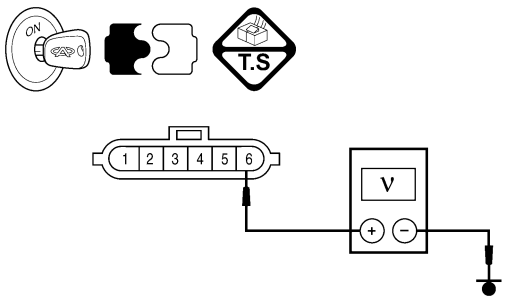

ltsmd030053

Downloaded from www.Manualslib.com manuals search engine

4. DETECT MALFUNCTIONING PART

- Check the following:
  - Harness connectors E-102, C-102
  - Harness open and short between APP sensor 1 and ECM

Is the check result normal?

Yes >> Replace the ECM.

NOTE : The Immobilizer control module must be matched to the new ECM (See ECM Removal & Installation in Section 03 Electronic Engine Controls).

No >> Repair or replace malfunctioning part.

5. CHECK APP SENSOR 2 POWER SUPPLY CIRCUIT

- Check APP sensor supply voltage between sensor terminal 3 and ground in the sensor electrical connector C-009.
- Approximately 5 V should exist.

Is the check result normal?

Yes >> Go to step 7.

No >> Go to the next step.

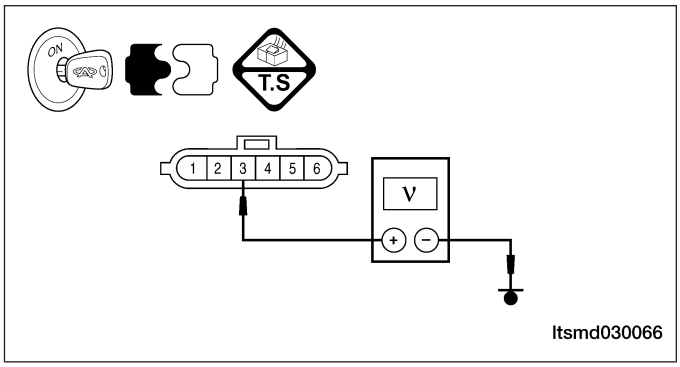

6. DETECT MALFUNCTIONING PART

- Check the following:
  - Harness connectors E-102, C-102
  - Harness open and short between APP sensor 2 and ECM

Is the check result normal?

Yes >> Replace the ECM.

NOTE : The Immobilizer control module must be matched to the new ECM (See ECM Removal & Installation in Section 03 Electronic Engine Controls).

No >> Repair or replace malfunctioning part.

7. CHECK TPS POWER SUPPLY CIRCUIT

- Check harness for short to power and short to ground, between following terminals.

Check TPS Power Supply

ECM TERMINAL	TPS TERMINAL
32	3

Is the check result normal?

Yes >> Go to the next step.

No >> Repair circuit for a short to ground or short to power in harness or connectors.

Downloaded from www.Manualslib.com manuals search engine

8. CHECK TPS

- Connect all harness connectors disconnected.
- Turn ignition switch on.
- Check voltage between ECM terminals 54 (TPS1) and ground, terminal 38 (TPS2) and ground under the following conditions:

TPS TERMINAL NO.	ITEM	CONDITION		VOLTAGE (DC VOLTAGE)
5	Electronic throttle control actuator (TPS2)	Ignition switch: ON	• Engine stopped • Accelerator pedal: Fully released	4.24 V
			• Engine stopped • Accelerator pedal: Fully depressed	0.72 V
6	Electronic throttle control actuator (TPS1)		• Engine stopped • Accelerator pedal: Fully released	0.74 V
			• Engine stopped • Accelerator pedal: Fully depressed	4.62 V

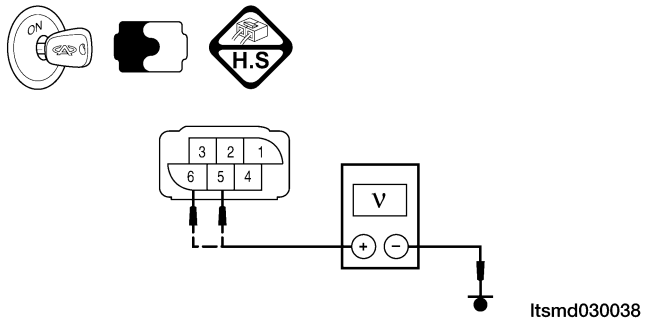

Is the check result normal?

Yes >> Go to the next step.

No >> Repair or replace TPS circuits for open or short.
If the TPS circuits are normal, replace electronic throttle control actuator. Perform throttle valve position self-learning.

9. CHECK APP SENSOR GROUND CIRCUIT FOR AN OPEN OR SHORT

- Turn ignition switch off.
- Disconnect ECM harness connector.
- Check harness continuity between APP sensor terminal 2 and ECM terminal 35, APP sensor terminal 5 and ECM terminal 36.
- Continuity should exist.
- Also check harness for short to power.

Is the check result normal?

Yes >> Go to the next step.

No >> Repair circuit for an open or short to power in harness or connectors.

Downloaded from www.Manualslib.com manuals search engine

10. CHECK APP SENSOR CIRCUIT FOR AN OPEN OR SHORT

- Check harness continuity between APP sensor 1 terminal 4 and ECM terminal 16, APP sensor 2 terminal 1 and ECM terminal 40.
- Continuity should exist.
- Also check harness for short to power and short to ground.

Is the check result normal?

Yes >> Go to the next step.

No >> Repair circuit for an open or short to power or short to ground in harness or connectors.

11. CHECK APP SENSOR

- Connect all harness connectors disconnected.
- Turn ignition switch on.
- Check voltage between ECM terminals 16 (APP sensor 1 signal), 40 (APP sensor 2 signal) and ground under the following conditions:

TERMINAL NO.	ITEM	CONDITION		DATA (DC VOLTAGE)
16	Accelerator Pedal Position sensor	Turn ignition switch on	• Engine stopped • Accelerator pedal: Fully released	0.72 - 0.74 V
			• Engine stopped • Accelerator pedal: Fully depressed	3.95 V
40	Accelerator Pedal Position sensor		• Engine stopped • Accelerator pedal: Fully released	0.36 - 0.37 V
			• Engine stopped • Accelerator pedal: Fully depressed	1.97 V

Is the check result normal?

Yes >> Go to the next step.

No >> Replace accelerator pedal assembly.
Perform Accelerator pedal position self-learning.

12. CHECK DTC

- With the X-431 scan tool, read ECM DTCs.
- Refer to ″DTC Confirmation Procedure″.

Is DTC P2138 still present?

Yes >> Replace the ECM.

NOTE : The Immobilizer control module must be matched to the new ECM (See ECM Removal & Installation in Section 03 Electronic Engine Controls).

No >> The system is now operating properly.
Reassemble the vehicle and road test to verify the customers complaint is repaired.

Downloaded from www.Manualslib.com manuals search engine

U0001 - High Speed CAN Defective

EEC - 2.0L - CAN - 01

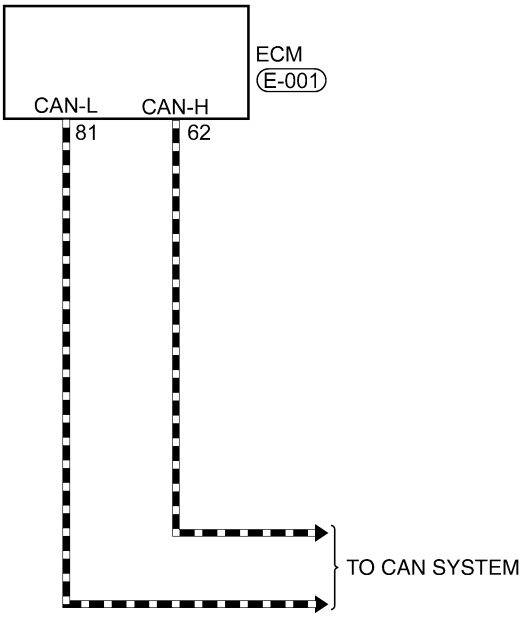

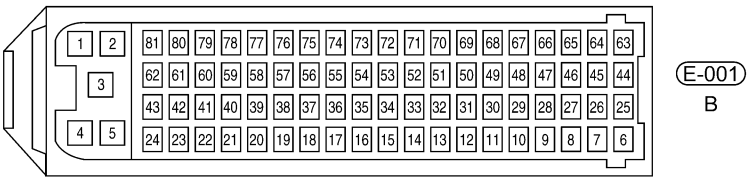

ltsmw030038t

Downloaded from www.Manualslib.com manuals search engine

On Board Diagnostic Logic

- Self-diagnosis detection logic.

DTC NO.	DTC DEFINITION	DTC DETECTION CONDITION	DTC SET CONDITION	POSSIBLE CAUSE
U0001	High speed CAN defective	With the ignition switch on	ECM detected that lost communication over the CAN BUS circuit. The circuit is continuously monitored.	• Harness or connectors • TCM • ECM

DTC Confirmation Procedure:

Before performing the following procedure, confirm that battery voltage is more than 12 V.

- Turn ignition switch off.
- Connect the X-431 scan tool to the Data Link Connector (DLC) - use the most current software available.
- Turn ignition switch on.
- With the scan tool, record and erase stored DTCs in the ECM.
- Cycle ignition switch several times then select view DTC and data stream.
- If the DTC is detected, the DTC condition is current. Go to Diagnostic Procedure - Step 1.
- If the DTC is not detected, the DTC condition is intermittent (See Diagnostic Help and Intermittent DTC Troubleshooting in Section 03 Electronic Engine Controls for more information.

NOTE :

- Ensure that the battery is fully charged.
- Before performing any DTC diagnostic procedures, verify the ECM power and ground circuits are properly connected.
- Before performing the diagnostic procedure, settle all other ECM DTCs first.

NOTE :

While performing electrical diagnosis & testing, always refer to the electrical schematics for specific circuit and component information.

Downloaded from www.Manualslib.com manuals search engine

Diagnostic Procedure

1. CHECK GROUND CONNECTIONS

- Turn ignition switch off.
- Loosen and retighten ground screws on the body (See Ground Inspection in Section 03 Electronic Engine Controls).
- Inspect ground connections E-207 and E-208 mounting position (See Vehicle Wiring Harness Layout - Engine Room Harness (With 2.0L Engine) in Section 16 Wiring).

Are the ground connections OK?

Yes >> Go to the next step.

No >> Repair or replace ground harness or connections.

2. CHECK DTC

- Turn ignition switch on.
- With the scan tool, select view ECM CAN DTC and data stream.

Is DTC U0001 present?

Yes >> Go to the next step.

No >> The conditions that caused this code to set are not present at this time. See Diagnostic Help in Section 03 Electronic Engine Controls.
Erase all codes and test drive the vehicle to verify the repair is complete.

3. CHECK THE OTHER MODULES CAN DTC

- With the scan tool X-431, enter all the other CAN communication modules such as TCM, CAN converter module.
- Read the CAN DTC.

Were other modules CAN DTCs found?

Yes >> If all of the other modules have the same DTC ″CAN Communication″, go to the next step.
If all of the other modules have the DTC ″Lost communication with ECM″, and do not have the ″CAN Communication″, Replace and program the ECM module.

No >> Go to step 8.

Downloaded from www.Manualslib.com manuals search engine

4. CHECK CAN-BUS LINE TERMINAL RESISTANCE IN ECM

- Turn ignition switch off.
- Disconnect battery positive cable.
- Disconnect ECM connector (1).

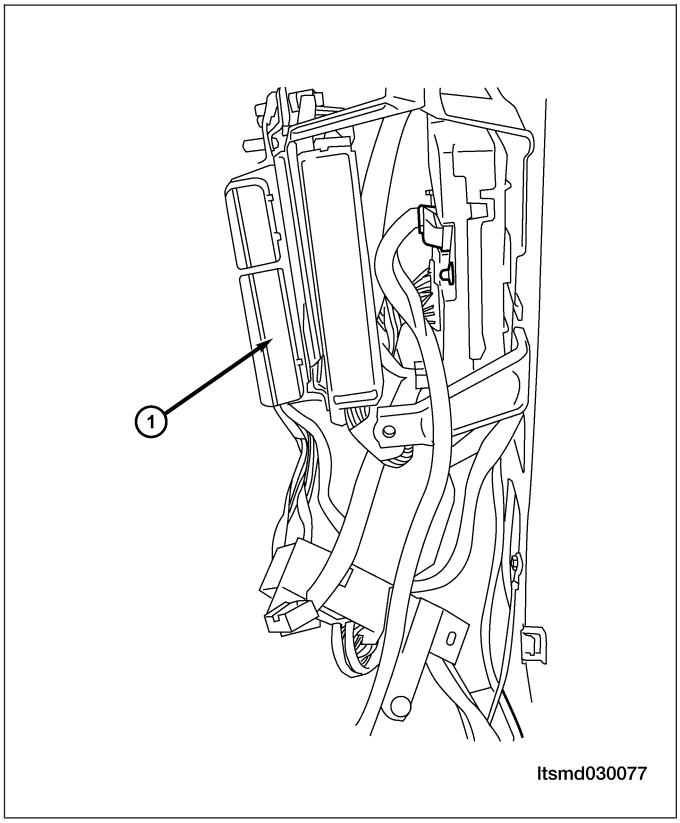

- Check resistance between ECM connector terminal 62 and 81.

ECM CONNECTOR TERMINAL (CAN-H)	ECM CONNECTOR TERMINAL (CAN-L)	RESISTANCE
62	81	123 Ω

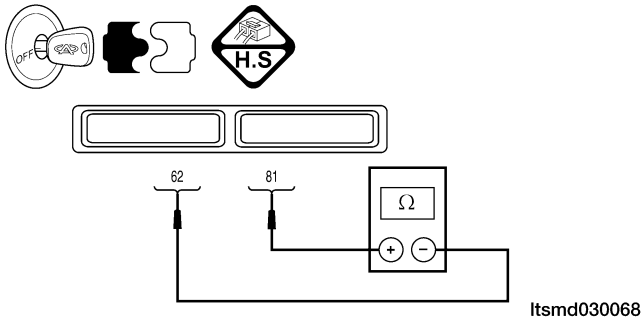

Is the check result normal?

Yes >> Go to the next step.

No >> Replace the ECM.

NOTE : The Immobilizer control module must be matched to the new ECM (See ECM Removal & Installation in Section 03 Electronic Engine Controls).
The problem caused by ECM internal error.

Downloaded from www.Manualslib.com manuals search engine

5. CHECK THE CAN-BUS LINE

- Disconnect TCM and CAN converter connectors (See Transaxle Control Module Remove & Installation in Section 08 Transaxle).
- Check harness (CAN-H) continuity between following terminals.

CAN	TCM CONNECTOR TERMINAL	ECM CONNECTOR TERMINAL	CONTINUITY
CAN-H	38	62	Yes

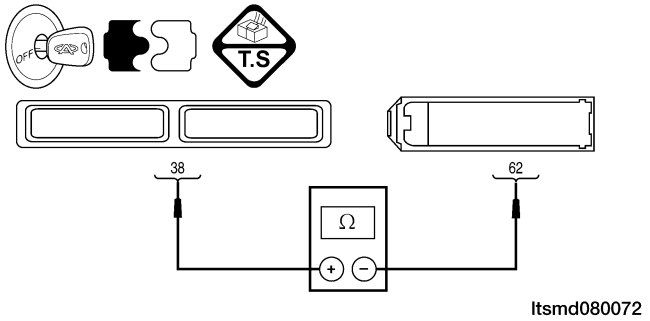

- Check harness (CAN-L) continuity between following terminals.

CAN	TCM CONNECTOR TERMINAL	ECM CONNECTOR TERMINAL	CONTINUITY
CAN-L	39	81	Yes

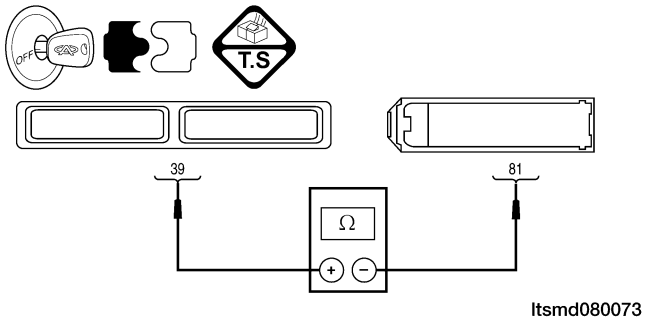

- Also check harness for short to ground and short to power.

Is the check result normal?

Yes >> Go to the next step.

No >> Repair or replace the CAN-Bus line.

Downloaded from www.Manualslib.com manuals search engine

6. CHECK CAN-BUS LINE

- Connect battery positive cable.
- Connect TCM and ECM connectors (See Transaxle Control Module Remove & Installation in Section 08 Transaxle).
- Turn ignition switch on.
- Check CAN-Bus voltage between following terminals.

CAN-H

– 0.025 V should exist while not activate communication.
– 0.65 V should exist while activate communication.

CAN-L

– 11 V should exist while not activate communication.
– 4.65 V should exist while activate communication.

DLC TERMINAL	GROUND
6 (CAN-H)	Ground
14 (CAN-L)	

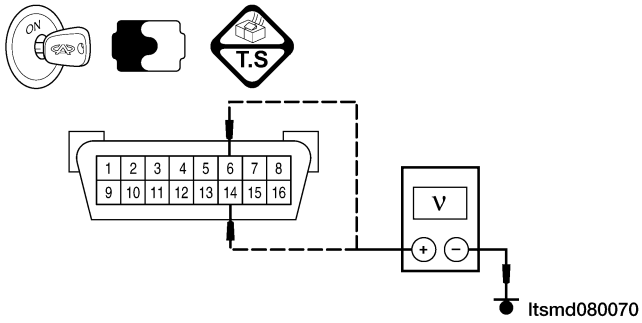

Is the check result normal and DTC U0001 not present?

Yes >> Replace the CAN converter.
The problem caused by the CAN converter internal error.

No >> Go to the next step.

7. CHECK CAN-BUS LINE

- Turn ignition switch off.
- Connect CAN converter.
- Disconnect TCM connectors (See Transaxle Control Module Remove & Installation in Section 08 Transaxle).
- Turn ignition switch on.
- Check CAN-Bus voltage as the standard value.

Is the check result normal and DTC U0001 not present?

Yes >> Replace TCM.
The problem caused by TCM internal error.

No >> Go to the next step.

Downloaded from www.Manualslib.com manuals search engine

8. CHECK ECM ELECTRICAL CONNECTOR

- Inspect the ECM electrical connector pins for proper fit or any chafed, pierced, pinched, or partially broken wires.
- With the X-431 scan tool, read ECM DTC.

Is the check result normal and DTC U0001 not present?

Yes >> The system is now operating properly.
Reassemble the vehicle and road test to verify the customers complaint is repaired.

No >> Replace the ECM.

NOTE : The Immobilizer control module must be matched to the new ECM (See ECM Removal & Installation in Section 03 Electronic Engine Controls).

The problem caused by ECM internal error.

Downloaded from www.Manualslib.com manuals search engine

ON-VEHICLE SERVICE

Engine Coolant Temperature (ECT) Sensor

Description

The Engine Coolant Temperature (ECT) sensor threads into the coolant outlet connector. The ECT is a negative thermal coefficient sensor.

Operation

The ECT provides an input to the Engine Control Module (ECM). As temperature increases, resistance of the sensor decreases. As coolant temperature varies, the ECT sensor resistance changes resulting in a different voltage value at the ECT sensor signal circuit. The ECM uses the input to control air-fuel mixture, timing, A/C compressor and radiator fan on/off times.

Removal & Installation

1. Disconnect the negative battery cable.
2. Drain the cooling system (See Cooling System Draining Procedure in Section 06 Cooling System).

WARNING!

Never remove the pressure relief cap under any conditions while the engine is operating or hot. Failure to follow these instructions could result in personal injury or damage to the cooling system or engine. To avoid having scalding hot coolant or steam blow out of the cooling system, use extreme care when removing the pressure relief cap. Wait until the engine has cooled, then wrap a thick cloth around the pressure relief cap and turn it slowly one turn (counterclockwise). Step back while the pressure is released from the cooling system. When you are certain all the pressure has been released, (with a cloth) turn and remove the pressure relief cap. Failure to follow these instructions may result in series personal injury.

3. Disconnect the coolant temperature sensor electrical connector.

CAUTION:
Remove the coolant temperature sensor when the engine is cold.

4. Remove the engine coolant temperature sensor (1).
   (Tighten: Engine coolant temperature sensor to 20 N·m)

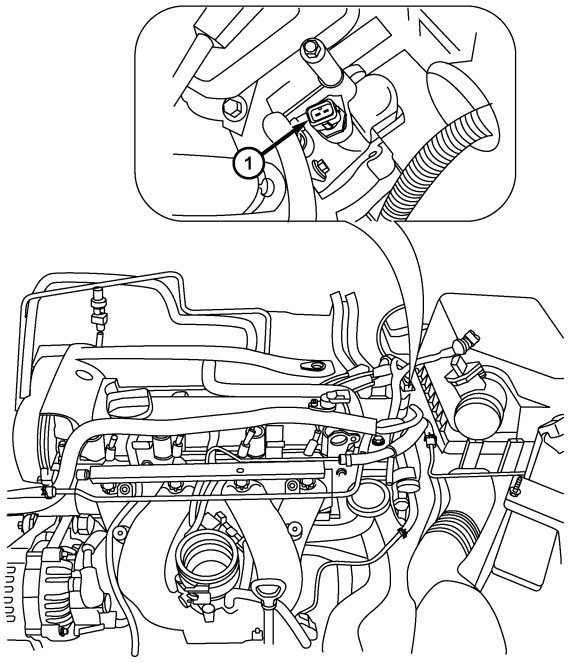

5. Discard the O-ring.

Downloaded from www.Manualslib.com manuals search engine

6. Installation is in the reverse order of removal.

NOTE :
After installing the engine coolant temperature sensor, check the coolant level.

Knock Sensor

Description

The knock sensor is attached to the cylinder block. The knock sensor is designed to detect engine vibration that is caused by detonation.

Operation

When the knock sensor detects a knock in one of the cylinders, it sends an input signal to the Engine Control Module (ECM). In response, the ECM retards ignition timing for all cylinders by a specified amount.

The knock sensor contains a piezoelectric material which constantly vibrates and sends an input voltage (signal) to the ECM while the engine operates. As the intensity of the vibration increases, the knock sensor output voltage also increases.

The ECM ignores knock sensor input during engine idle conditions. Once the engine speed exceeds a specified value, knock retard is allowed.

Removal & Installation

1. Disconnect and isolate the negative battery cable.
2. Disconnect the knock sensor electrical connector.
3. Remove the knock sensor retaining bolt (1) and remove the knock sensor.
   (Tighten: Knock sensor retaining bolt to 20 N·m)

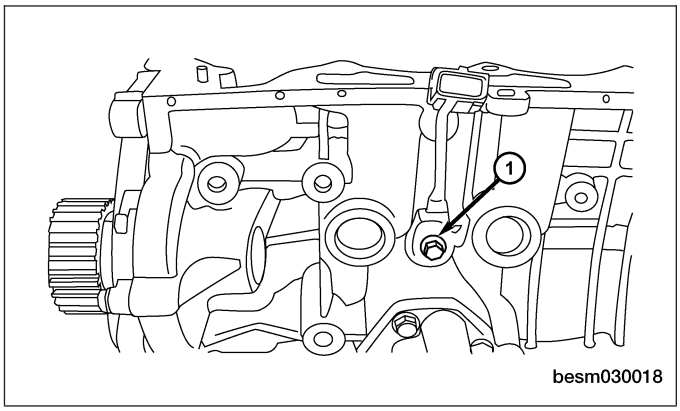

4. Installation is in the reverse order of removal.

Oxygen Sensor

Description

This vehicle is equipped with two oxygen sensors (upstream oxygen sensor & downstream oxygen sensor). The oxygen sensors are located before and after the three way catalyst. The oxygen sensors continually monitor the oxygen level in the exhaust gas. The sensor is made of ceramic zirconia. The zirconia generates voltage from approximately 1 volt in richer conditions to 0 volt in leaner conditions.

Operation

The O2 sensors produce voltages from 0 to 1 volt, depending upon the oxygen content of the exhaust gas. When a large amount of oxygen is present (caused by a lean air/fuel mixture, can be caused by misfire and exhaust leaks), the sensors produces a low voltage. When there is a lesser amount of oxygen present (caused by a rich air/fuel mixture, can be caused by internal engine problems) it produces a higher voltage. By monitoring the oxygen content and converting it to electrical voltage, the sensors act as a rich-lean switch.

The oxygen sensors are equipped with a heating element that keeps the sensors at proper operating temperature during all operating modes. Maintaining correct sensor temperature at all times allows the system to enter into closed loop operation sooner. Also, it allows the system to remain in closed loop operation during periods of extended idle.

Downloaded from www.Manualslib.com manuals search engine

Upstream Oxygen Sensor

The input from the upstream heated oxygen sensor tells the Engine Control Module (ECM) the oxygen content of the exhaust gas. Based on this input, the ECM fine tunes the air-fuel ratio by adjusting injector pulse width.

Downstream Oxygen Sensor

The downstream heated oxygen sensor signal is used to detect catalytic convertor deterioration. As the convertor deteriorates, the signal from the downstream sensor begins to match the upstream sensor signal except for a slight time delay. By comparing the downstream heated oxygen sensor signal to the signal from the upstream sensor, the ECM calculates catalytic convertor efficiency. This calculation is also used to establish the upstream O2 goal voltage (switching point).

Removal & Installation - Upstream Oxygen Sensor

1. Disconnect the negative battery cable.
2. Disconnect the oxygen sensor electrical connector.

CAUTION:
Remove the oxygen sensor after the exhaust pipe has cooled.

3. Remove the upstream oxygen sensor (1).
   (Tighten: Upstream oxygen sensor to 45 N·m)

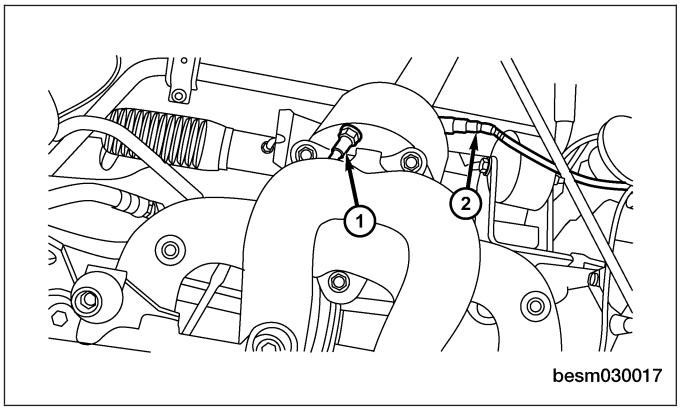

4. Installation is in the reverse order of removal.

Installation Notes:

- Before installing the oxygen sensor, coat the threads with rust inhibiting lubricant.

Removal & Installation - Downstream Oxygen Sensor

1. Disconnect the negative battery cable.
2. Disconnect the oxygen sensor electrical connector.

CAUTION:
Remove the oxygen sensor after the exhaust pipe has cooled.

3. Remove the downstream oxygen sensor (2).
   (Tighten: Downstream oxygen sensor to 45 N·m)

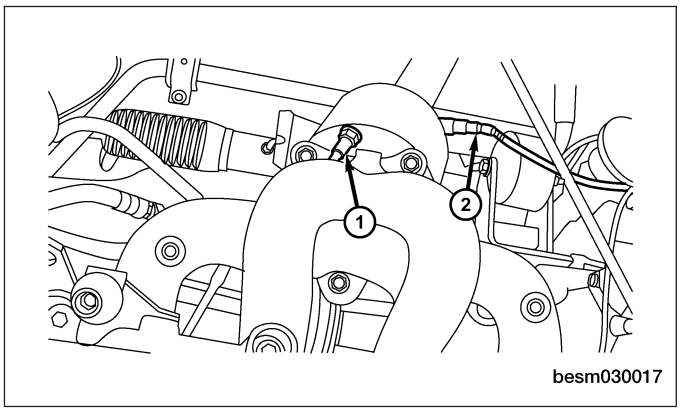

Downloaded from www.Manualslib.com manuals search engine

4. Installation is in the reverse order of removal.

Installation Notes:

- Before installing the oxygen sensor, coat the threads with rust inhibiting lubricant.

Crankshaft Position (CKP) Sensor

Description

The Crankshaft Position (CKP) sensor is located on the flywheel shell facing the gear teeth of the signal plate. It detects the fluctuation of the engine revolution. The sensor consists of a permanent magnet and Induction coil.

Operation

When the engine is running, the high and low parts of the teeth cause the gap with the sensor to change. The changing gap causes the magnetic field near the sensor to change. Due to the changing magnetic field, the voltage from the sensor changes. The Engine Control Module (ECM) receives the voltage signal and detects the fluctuation of the engine revolution.

Removal & Installation

1. Disconnect and isolate the negative battery cable.
2. Disconnect the CKP sensor electrical connector.
3. Remove the CKP sensor retaining bolt (1) and remove the CKP sensor.
   (Tighten: Crankshaft position sensor retaining bolt to 10 N·m)

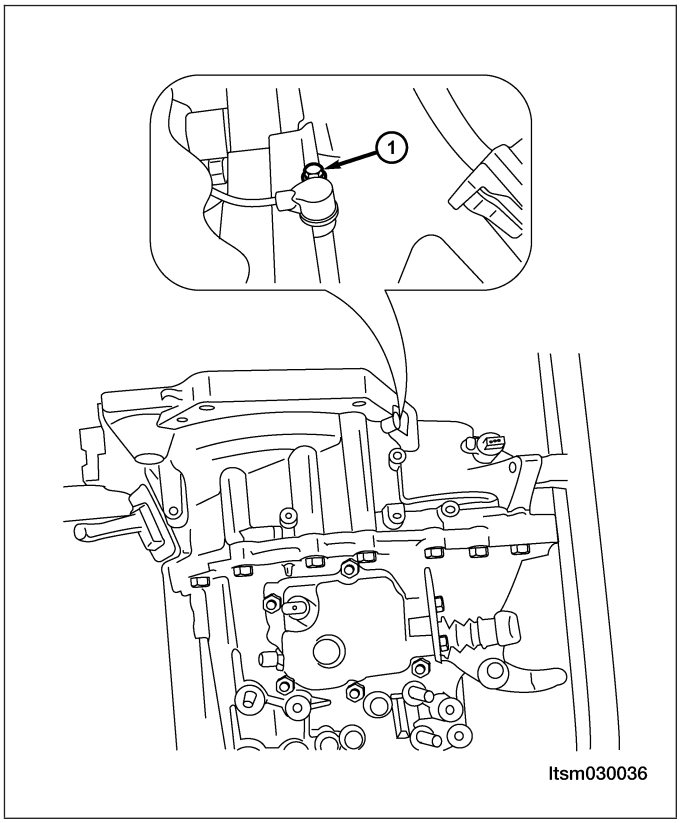

4. Installation is in the reverse order of removal.

Downloaded from www.Manualslib.com manuals search engine

Camshaft Position (CMP) Sensor

Description

The Camshaft Position (CMP) sensor senses the protrusion of inlet valve cam sprocket to identify a particular cylinder. The CMP sensor senses the piston position. When the Crankshaft Position (CKP) sensor becomes inoperative, the CMP sensor provides various controls of engine parts instead, utilizing timing of cylinder identification signals. The sensor consists of a permanent magnet and Hall IC.

Operation

When engine is running, the high and low parts of the teeth cause the gap with the sensor to change. The changing gap causes the magnetic field near the sensor to change. Due to the changing magnetic field, the voltage from the sensor changes. The Engine Control Module (ECM) detects the voltage signal and identify piston position and cylinder timing.

Removal & Installation

1. Disconnect the negative battery cable.
2. Disconnect the CMP sensor electrical connector.
3. Remove the CMP sensor retaining bolt (1).
   (Tighten: Camshaft position sensor retaining bolt to 7 N·m)
4. Remove CMP sensor.
5. Pull sensor up out of the cylinder head cover.
6. Installation is in the reverse order of removal.

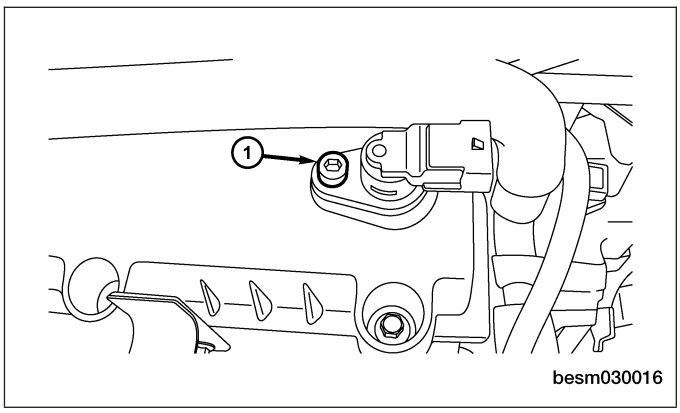

Air Flow Sensor

Description

The air flow sensor is placed in the air intake hose. The air flow sensor measures the intake flow rate by measuring a part of the entire intake flow. The air flow sensor converts the amount of air drawn into the engine into a voltage signal. The Engine Control Module (ECM) needs to know intake air volume to calculate engine load. This is necessary to determine how much fuel to inject.

Operation

The air flow sensor controls the temperature of the hot wire to a certain amount. The heat generated by the hot wire is reduced as the intake air flows around it. The more air, the greater the heat loss. Therefore, the electric current supplied to the hot wire is changed to maintain the temperature of the hot wire as air flow increases. The ECM detects the air flow by means of this voltage signal change.

Removal & Installation

1. Disconnect the negative battery cable.
2. Remove the engine cover.
3. Disconnect the air flow sensor electrical connector.

Downloaded from www.Manualslib.com manuals search engine

4. Remove the air flow sensor retaining bolts (1).
   (Tighten: Air flow sensor retaining bolts to 5 N·m)

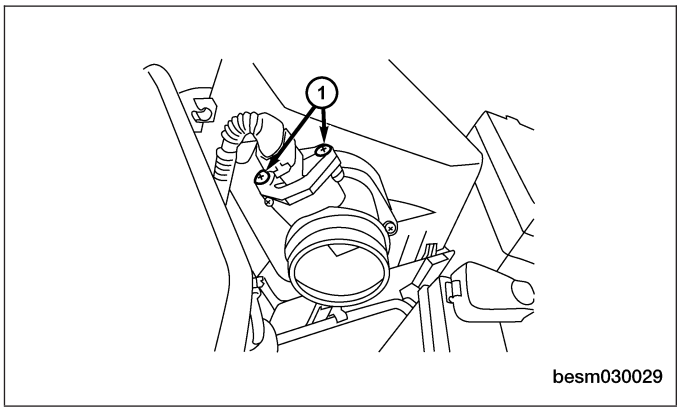

5. Pull sensor up and take out of the air cleaner case.
6. Installation is in the reverse order of removal.

Accelerator Sensor

Description

The accelerator sensor is located on the right front crossbeam.

Operation

The accelerator sensor monitors the road conditions. It sends a signal to the ECM, the ECM determines if a possible misfire condition exists.

Removal & Installation

1. Disconnect the negative battery cable.
2. Disconnect the accelerator sensor connect.
3. Remove the accelerator sensor (1).

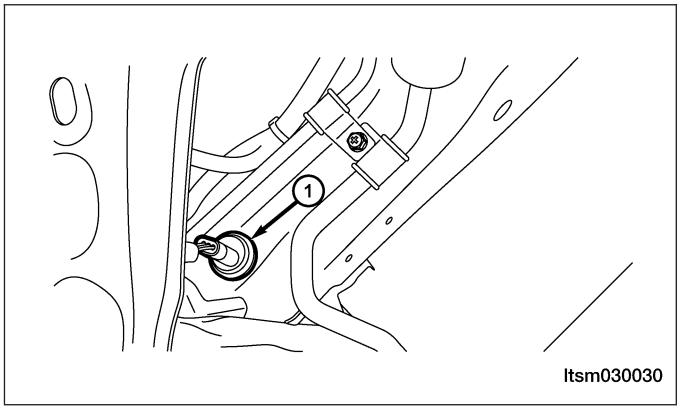

4. Installation is in the reverse order of removal.

Speed Control System

Description

The Speed Control System allows a driver to keep the vehicle at a predetermined speed without depressing the accelerator pedal. The driver can set vehicle speed in advance between approximately 25 km/h and 130 km/h.

ECM controls throttle angle of electronic throttle control actuator to regulate engine speed.

If any malfunction occurs in the Speed Control System, it automatically deactivates the system and the cruise indicator flashes.

Downloaded from www.Manualslib.com manuals search engine

Operation

Set Operation

- Press CRUISE combination switch (ON/OFF switch). The CRUISE indicator in instrument cluster illuminates.
- When vehicle speed reaches a desired speed between approximately 25 km/h and 130 km/h, press SET switch.

Speed Operation

- If the vehicle speed has been increased by during cruise control driving, the SET switch is pressed and then Speed Control System will keep the new set speed.
- If the RESUME/ACC switch is pressed (less than 0.5 seconds) during cruise control operation, the cruising speed is higher than the original speed of 2 km/h.
- If the DEC switch is pressed (less than 0.5 seconds) during cruise control operation, the cruising speed is less than the original speed of 2 km/h.

Cancel Operation

- When any of following conditions exist, cruise operation will be canceled.
  - OFF switch is pressed
  - Brake pedal is depressed
  - If any malfunction occurs in Speed Control System, it automatically deactivates control.

Downloaded from www.Manualslib.com manuals search engine

Electrical Schematics

Speed Control System (page 1 of 4)

SPEED CONTROL - WITH DP0 TRANSMISSION

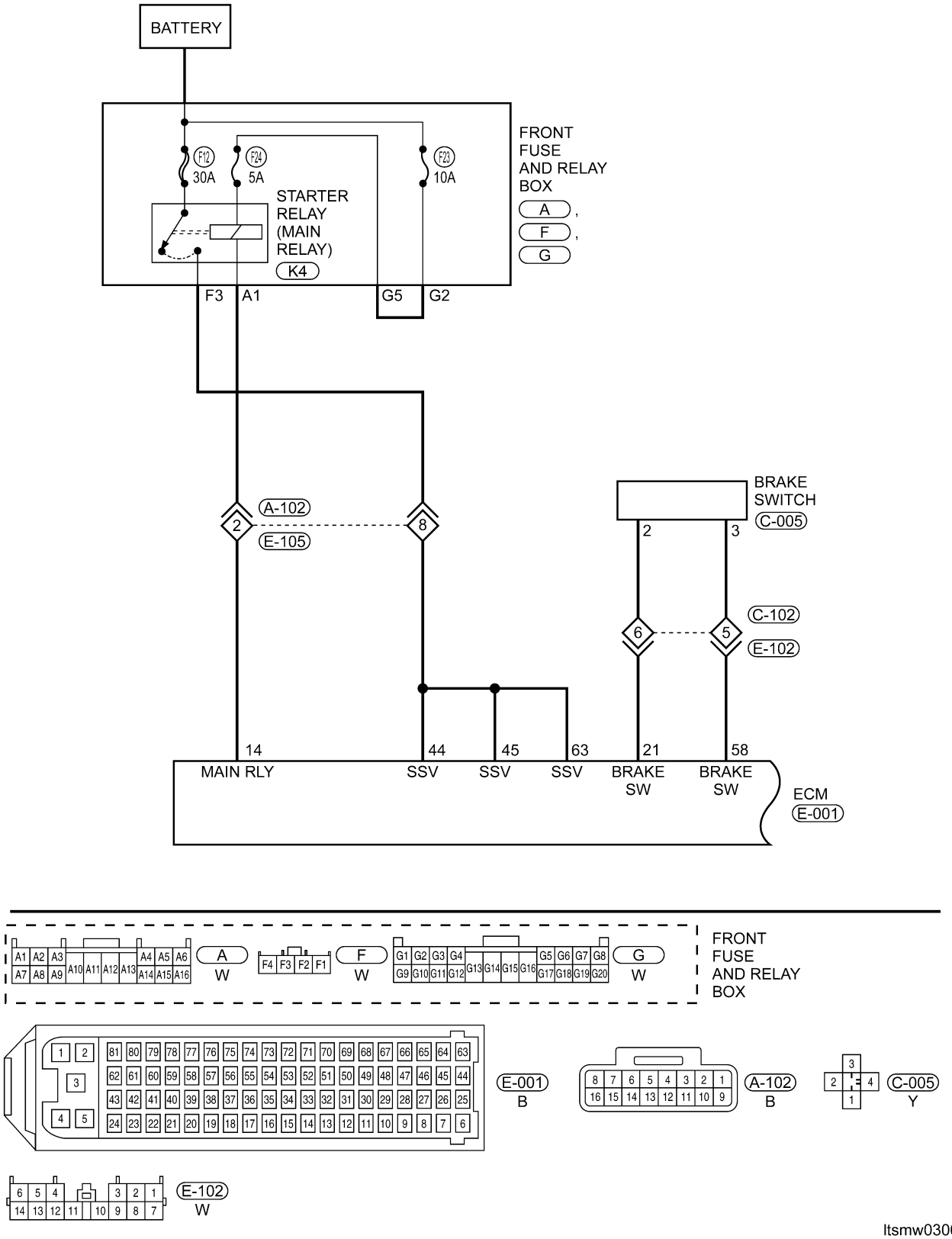

ltsmw030060t

Downloaded from www.Manualslib.com manuals search engine

Speed Control System (page 2 of 4)

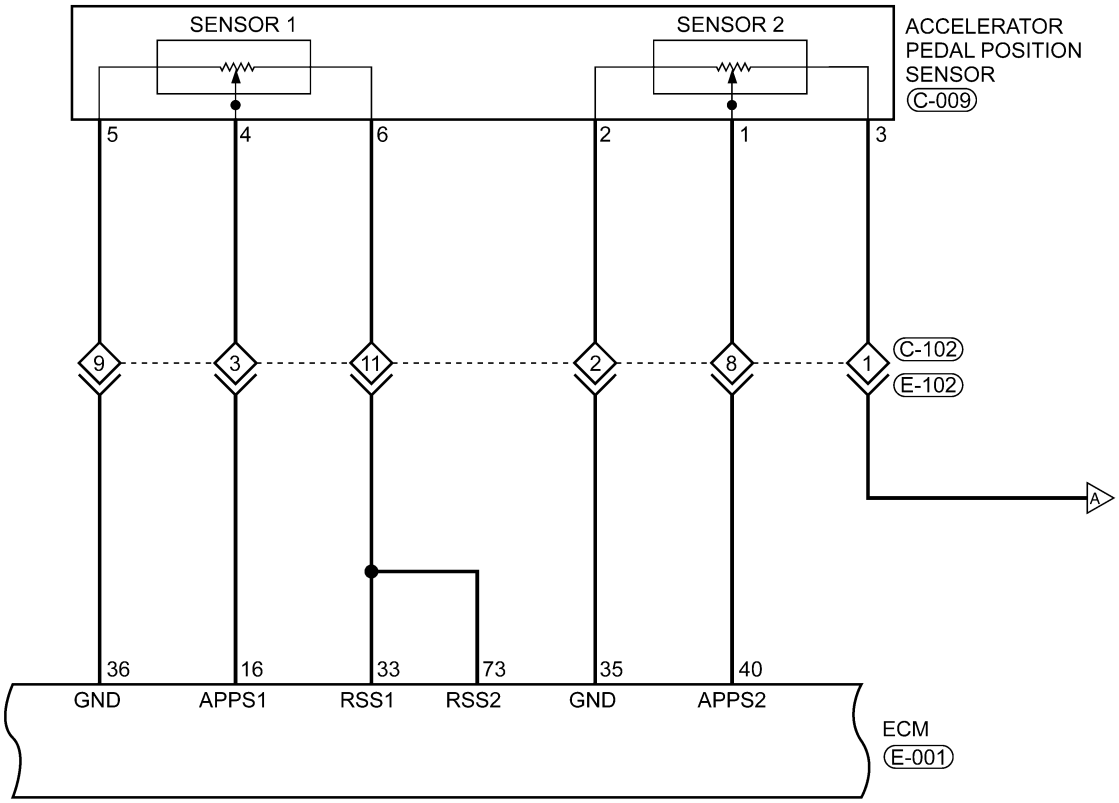

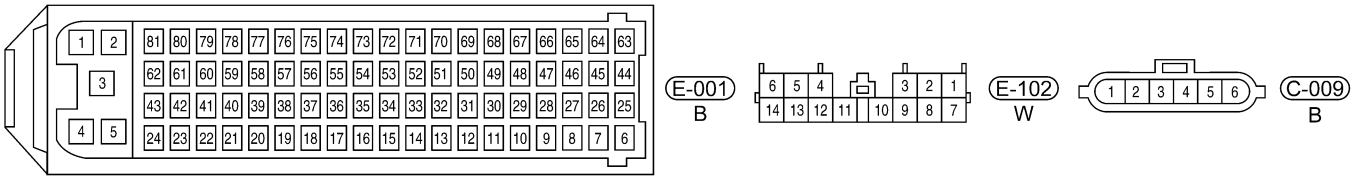

ltsmw030061t

Downloaded from www.Manualslib.com manuals search engine

Speed Control System (page 3 of 4)

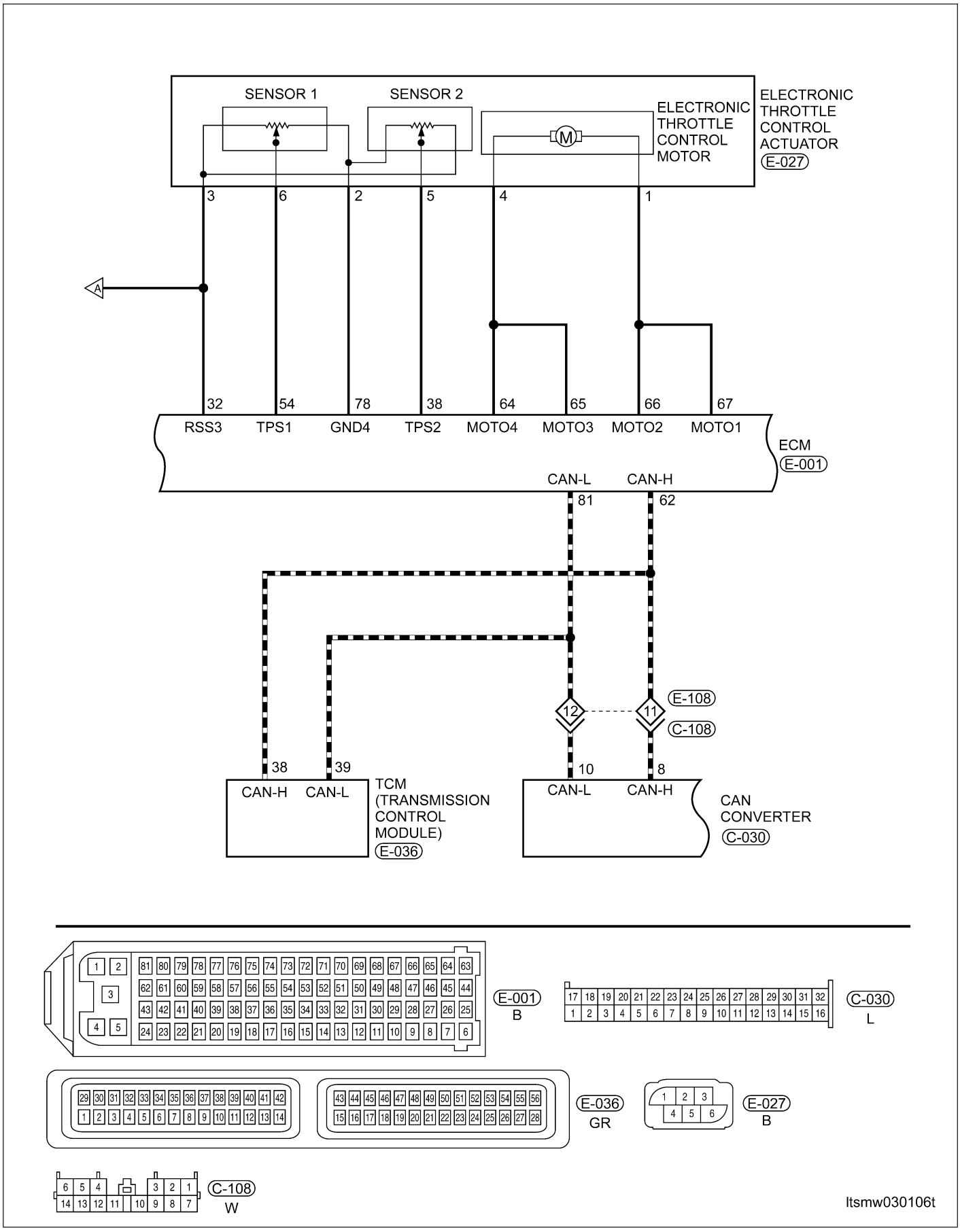

Downloaded from www.Manualslib.com manuals search engine

Speed Control System (page 4 of 4)

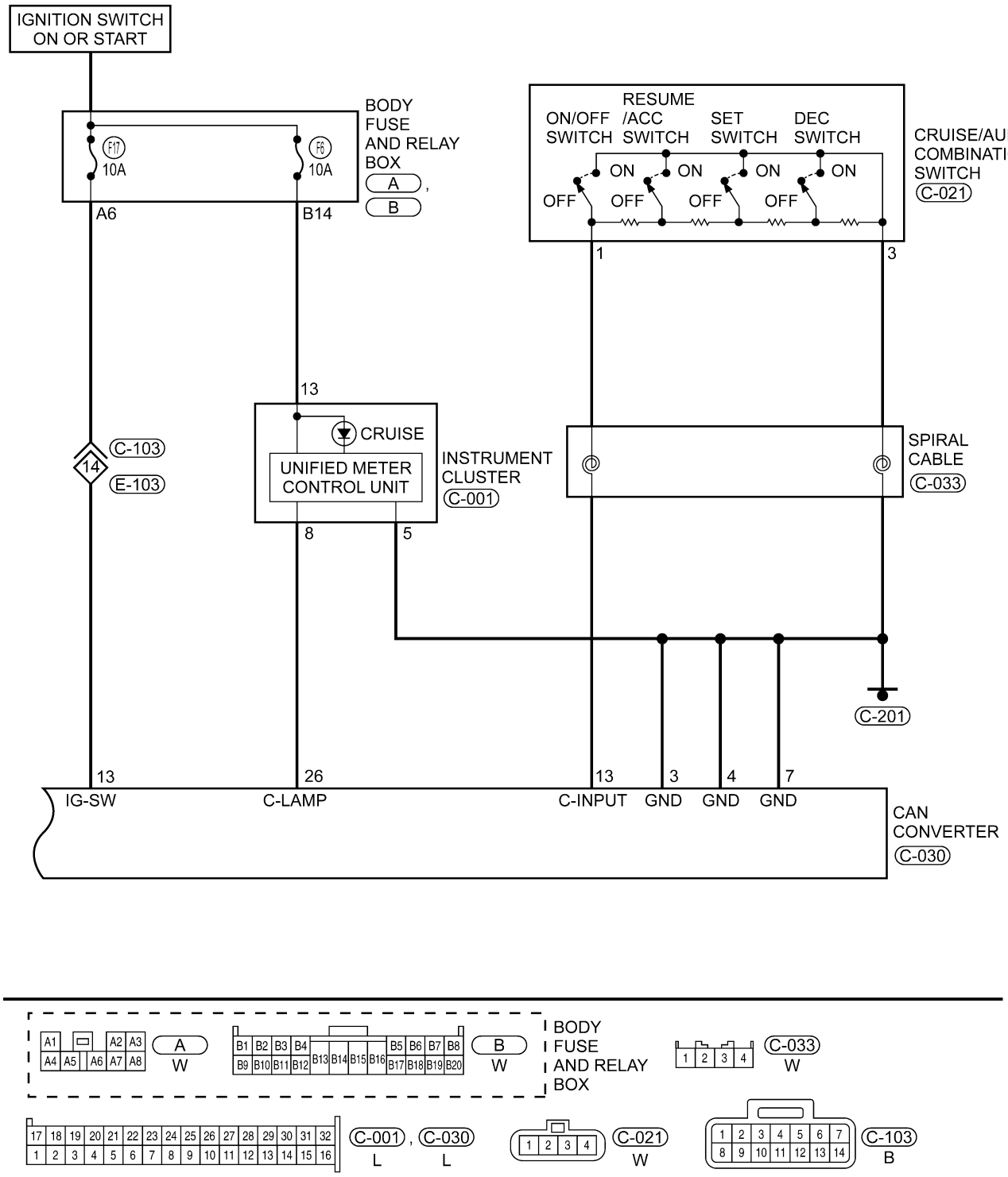

ltsmw030062t

Downloaded from www.Manualslib.com manuals search engine

Accelerator Pedal Position (APP) Sensor

Description

The Accelerator Pedal Position (APP) sensor is located inside the accelerator pedal. The accelerator pedal position sensor cannot be disassembled by itself. The accelerator pedal must be replaced as a unit.

Operation

The Accelerator Pedal Position (APP) sensor on the accelerator pedal works according to the Hall principal. The sensor is integrated into the pedal lever axis. It consists of a shaft with a ring magnet. This rotates in a printed circuit board with a stator in the fixed Hall elements. This produces a change in the voltage. The APP sensor is supplied with 5 V from the Engine Control Module (ECM). The information regarding accelerator position is supplied to the ECM by means of two voltages.

Removal & Installation

1. Disconnect the negative battery cable.
2. Remove the instrument panel lower trim panel.
3. Disconnect the APP sensor electrical connector (2).
4. Remove the three APP sensor mounting bolts (1). (Tighten: APP sensor mounting bolts to 11 N·m)
5. Remove the APP sensor with the pedal.
6. Installation is in the reverse order of removal.

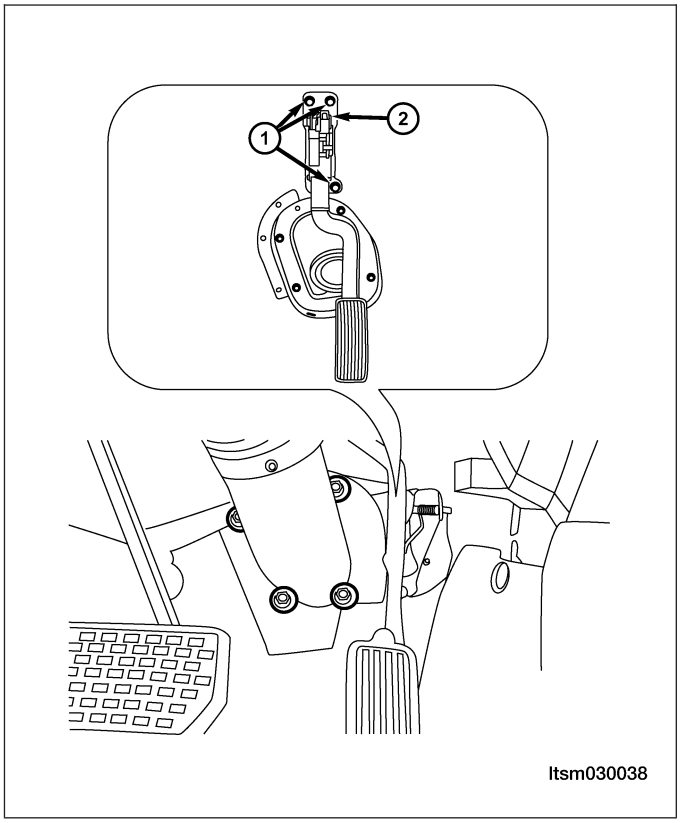

Downloaded from www.Manualslib.com manuals search engine

Electronic Throttle Control Actuator

Description

The throttle body is located on the intake manifold. It controls air into the intake manifold. The Electronic Throttle Control Actuator consists of a throttle control motor and the throttle position sensor. The throttle control motor is operated by the ECM and it opens and closes the throttle valve. The throttle position sensor detects the throttle valve position.

Operation

Filtered air from the air cleaner enters the intake manifold through the throttle body. A throttle valve (plate) is used to supply air for idle and driving conditions. The throttle position sensor is part the throttle body. The throttle position sensor signal is used by the ECM to determine throttle position. The ECM controls the electronic throttle control to meter air into the engine. This regulates engine power. The vehicle is in sense a “Drive by Wire” system.

Removal & Installation

1. Remove the engine cover.
2. Disconnect the negative battery cable.
3. Disconnect the electronic throttle control actuator connector.
4. Remove two hoses on electronic throttle control actuator.
5. Remove four electronic throttle control actuator mounting bolts.
   (Tighten: Electronic throttle control actuator bolts to 10 N·m)
6. Remove the throttle control actuator carefully.
7. Installation is in the reverse order of removal.

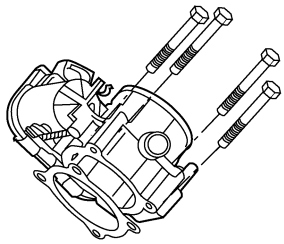

besm030022

Downloaded from www.Manualslib.com manuals search engine

Engine Control Module (ECM)

Description

The Engine Control Module (ECM) for this model is serviced only as a complete unit.

Operation

The ECM is a pre-programmed, microprocessor-based digital computer. It regulates ignition timing, air-fuel ratio, emission control devices, charging system, certain transmission features, speed control, air conditioning compressor clutch engagement and idle speed. The ECM can adapt its programming to meet changing operating conditions.

Removal & Installation

1. Disconnect the negative battery cable.
2. Remove the glove box (See Instrument Panel Removal & Installation in Section 15 Body).
3. Disconnect the ECM electrical connector.
4. Remove the ECM retaining bolts (1).
   (Tighten: ECM retaining bolts to 10 N·m)
5. Remove the ECM.
6. Installation is in the reverse order of removal.

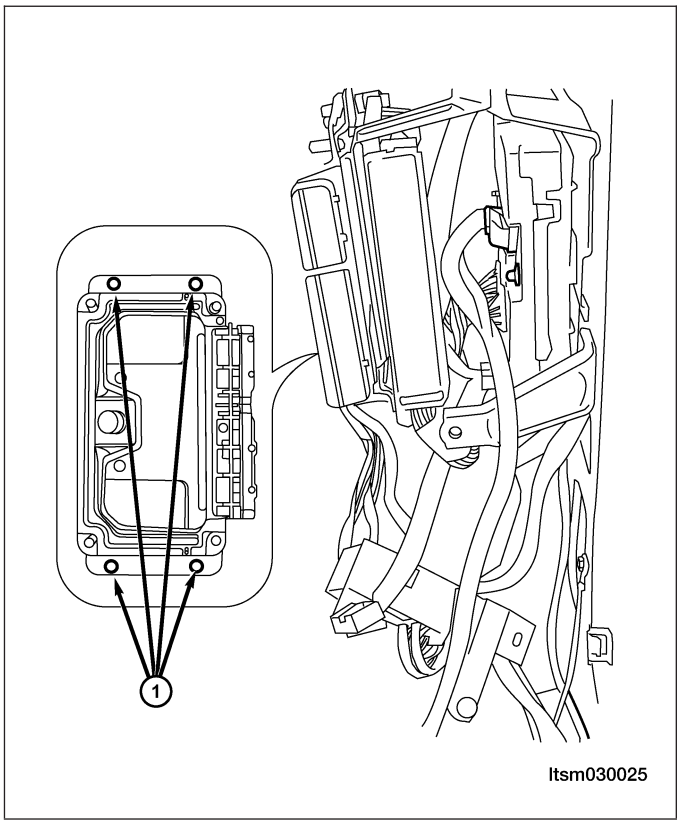

Installation Notes:

NOTE :
The Immobilizer control module must be matched to the new ECM before the vehicle will start.

Matching Immobilizer Control Module to New Engine Control Module (ECM)

Perform the following to match the Immobilizer control module to the new ECM:

- With the X-431 scan tool, choose T11 series.
- Choose ″immobilize″.
- Choose ″input code″.
- Input the safety code.
- Click the small keyboard.
- Click ″OK″.
- Choose ″Immobilizer adapt″.
- Choose ″read Immobilizer to ECM″ immediately.
- Click ″OK″.

Downloaded from www.Manualslib.com manuals search engine

2.4L ENGINE CONTROLS

GENERAL INFORMATION 03-442
Description 03-442
Operation 03-442
Electronic Engine Control Input & Output Device Failure Modes 03-443
Specifications 03-444
Special Tools 03-445
Electrical Schematics 03-447
ECM Connector Pin-Out Table 03-457

DIAGNOSIS & TESTING 03-458
Diagnostic Help 03-458
Diagnostic Logic 03-458
Ground Inspection 03-459
Diagnostic Tools 03-459
Diagnostic Trouble Code (DTC) List 03-461

ECM Power Supply and Ground Circuit Test 03-462
Power Supply And Ground Circuit Diagnostic Check 03-462

Diagnostic Trouble Code (DTC) Tests 03-469
11 - Oxygen Sensor 03-469
12- Air Flow Sensor 03-476
13 - Air Temperature Sensor 03-482
14 - Throttle Position Sensor 03-487
21 - Coolant Temperature Sensor 03-493
22 - Crankshaft Position Sensor 03-498
23 - Camshaft Position Sensor 03-504
25 - Atmosphere Pressure Sensor 03-510
31 - Knock Sensor 03-515
41 - Injector 03-519
44 - Ignition Signal 03-525

ON-VEHICLE SERVICE 03-531

Engine Coolant Temperature (ECT) Sensor 03-531
Description 03-531
Operation 03-531
Removal & Installation 03-531

Coolant Temperature Sensor (For Instrument Cluster) 03-532
Description 03-532
Operation 03-532
Removal & Installation 03-532

Knock Sensor 03-533
Description 03-533
Operation 03-533
Removal & Installation 03-533

Oxygen Sensor 03-533
Description 03-533
Operation 03-533
Upstream Oxygen Sensor 03-534
Downstream Oxygen Sensor 03-534
Removal & Installation - Upstream Oxygen Sensor 03-534
Removal & Installation - Downstream Oxygen Sensor 03-535

Camshaft Position (CMP) Sensor 03-536
Description 03-536
Operation 03-536
Removal & Installation 03-536

Air Flow Sensor 03-537
Description 03-537
Operation 03-537
Removal & Installation 03-537

Throttle Control Actuator 03-538
Description 03-538
Operation 03-538
Removal & Installation 03-538

Engine Control Module (ECM) 03-539
Description 03-539
Operation 03-539
Removal & Installation 03-539

Throttle Position Sensor (TPS) 03-540
Description 03-540
Operation 03-540
Removal & Installation 03-540

Idle Air Control (IAC) Motor 03-541
Description 03-541
Operation 03-541
Removal & Installation 03-541

Crankshaft Position (CKP) Sensor 03-542
Description 03-542
Operation 03-542
Removal & Installation 03-542

Downloaded from www.Manualslib.com manuals search engine

GENERAL INFORMATION

Description

The Engine Control Module (ECM) consists of a microcomputer and connectors for signal input and output and for power supply. The ECM controls the engine.

The following are the input and output components monitored by the ECM. The monitored functions include components from the engine, ignition, transaxle, air conditioning, or any other ECM supported subsystem.

ECM Inputs

- Brake Switch Sensor
- Camshaft Position (CMP) Sensor
- Crankshaft Position (CKP) Sensor
- Engine Coolant Temperature (ECT) Sensor
- Air Flow Sensor
- Coolant Temperature Sensor (For Instrument Cluster)
- Throttle Position Sensor (Integral with Electronic Throttle Control Actuator)
- Power Steering Switch
- Knock Sensor
- Oxygen Sensor (Upstream & Downstream)
- Clutch Pedal Switch (Manual transmission only)

ECM Outputs

- Canister Control Valve
- Fuel Injectors
- Fuel Pump Relay
- Electronic Throttle Control Actuator
- Ignition Coil
- A/C Compressor
- Cooling Fan
- Oxygen Sensor heating coil (Upstream & Downstream)

Operation

The ECM monitors components and circuits and tests them in various ways depending on the hardware, function, and type of signal. For example, analog inputs such as throttle position or engine coolant temperature are typically checked for opens, shorts and out-of-range values. This type of monitoring is carried out continuously. Some digital inputs like vehicle speed or crankshaft position rely on rationality checks - checking to see if the input value makes sense at the current engine operating conditions. These types of tests may require monitoring several components and can only be carried out under appropriate test conditions.

The ECM is a pre-programmed, microprocessor-based digital computer. It regulates ignition timing, air-fuel ratio, emission control devices, charging system, certain transmission features, speed control, air conditioning compressor clutch engagement and idle speed. The ECM can adapt its programming to meet changing operating conditions.

Downloaded from www.Manualslib.com manuals search engine

Electronic Engine Control Input & Output Device Failure Modes

NUMBER	ITEM	FAILURE MODE	CORRECTION
1	CKP	• Engine is hard to start. • The engine RPM will be limited after the engine starts. • The highest RPM is less than 3800. • Excessive exhaust emissions. • No ignition signal to the ECM. • The tachometer does not work. • Rough engine operation.	Replace
2	CMP	• The fuel injector ON time may vary from 720 degrees to 360 degrees. • The sensor output is not correct, the MIL light will turn on when with the second revolution after the engine starts. • Engine is hard to start. • The highest RPM is less than 4000.	Replace
3	APPS	• The MIL light will turn on. • Poor acceleration. • The engine RPM will be limited after the engine starts.	Replace
4	ECT	• Engine hard to start when cold. • Engine hard to start when hot. • Poor driving capability. • If the sensor circuit is shorted to power, the engine will run under the default values. • The temperature gauge indicates too high. • The temperature gauge indicates too low. • The cooling fan operates continuously on high speed. • The high temperature warning lamp will flash when the IP indicates low temperature.	Replace
5	MAF	• The cooling fan will operate for approximately 60 seconds on high speed after the ignition switch is turned off. • Poor acceleration. • Poor driving capability.	Replace
6	O_2 Sensor	• Poor fuel economy. • Excessive exhaust emissions. • Sluggish acceleration. • Poor driving capability.	Replace
7	Knock Sensor	• The engine produces an engine knock. • Overheated engine. • Excessive exhaust emissions. • Poor fuel economy. • Lack of engine power. • Internal engine damage.	Replace
8	ECM	• Unstable engine idle. • Poor acceleration. • Unable to start. • High engine idle. • The engine exhaust exceeds emission standards. • Engine is hard to start. • Air conditioner does not operate. • Fuel injector control failure. • Engine stalls out.	Replace
9	Ignition Coil	• Unstable idle. • Lack of engine power. • Poor fuel economy. • Excessive exhaust emissions. • Weak spark.	Replace

Downloaded from www.Manualslib.com manuals search engine

NUMBER	ITEM	FAILURE MODE	CORRECTION
10	Fuel Injector	• Unstable idle. • Lack of engine power. • Poor acceleration. • Engine will not start. • Plugged injector.	Replace
11	TPS	• Poor acceleration. • The MIL light will turn on.	Replace
12	EVAP	• The engine base fuel closed-loop control self-learning will be shut off. • The engine idle air control self-learning will be shut off. • Unstable idle or high idle.	Replace
13	Fuel Pump	• Noisy fuel pump operation. • Poor acceleration. • Engine will not start.	Replace
14	MAP	• Poor acceleration. • Unstable idle. • Rough engine operation.	Replace
15	IAT	• Intake air temperature will be equal to the coolant temperature.	Replace
16	Cooling Fan	• High engine temperature. • Poor air conditioner performance.	Replace
17	Accelerator Sensor	• Misfire • Poor driving capability. • Rough engine operation.	Replace

Specifications

Torque Specifications

DESCRIPTION	TORQUE (N·m)
Engine Coolant Temperature Sensor	20
Knock Sensor	20
Oxygen Sensors	45
Crankshaft Position Sensor	20
Camshaft Position Sensor	10
Air Flow Sensor	8
Engine Control Module	10
Electronic Throttle Control Actuator	10
Vehicle Speed Sensor	10
Coolant Temperature Sensor (For Instrument Cluster)	14

Downloaded from www.Manualslib.com manuals search engine

Special Tools

Diagnostic Scan Tool X-431	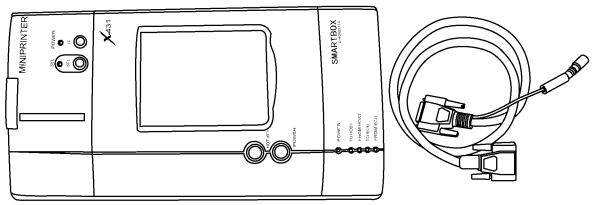
Engine Analyzer KES-200	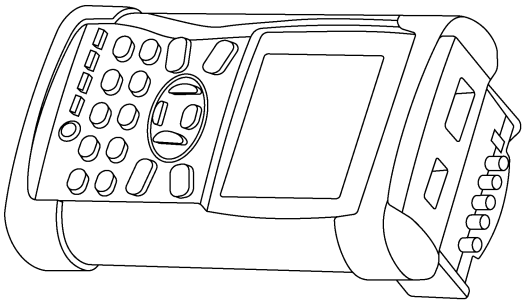
Digital Multimeter Fluke 15B & 17B	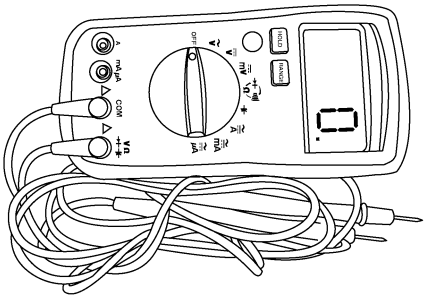

Downloaded from www.Manualslib.com manuals search engine

Compression Gauge	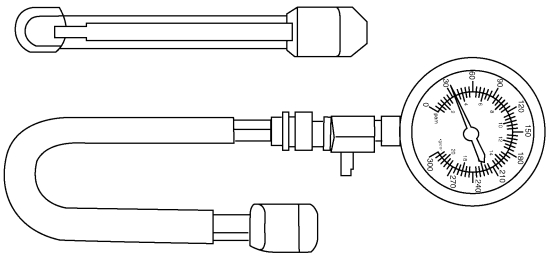 besm030009
Fuel Pressure Gauge	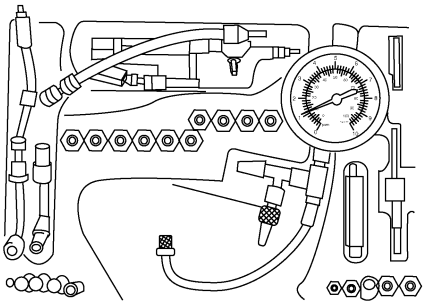 besm030008

Downloaded from www.Manualslib.com manuals search engine

Electrical Schematics

Electronic Engine Controls (Page 1 of 10)

ENGINE CONTROL SYSTEM - WITH MITSUBISHI 2.4L

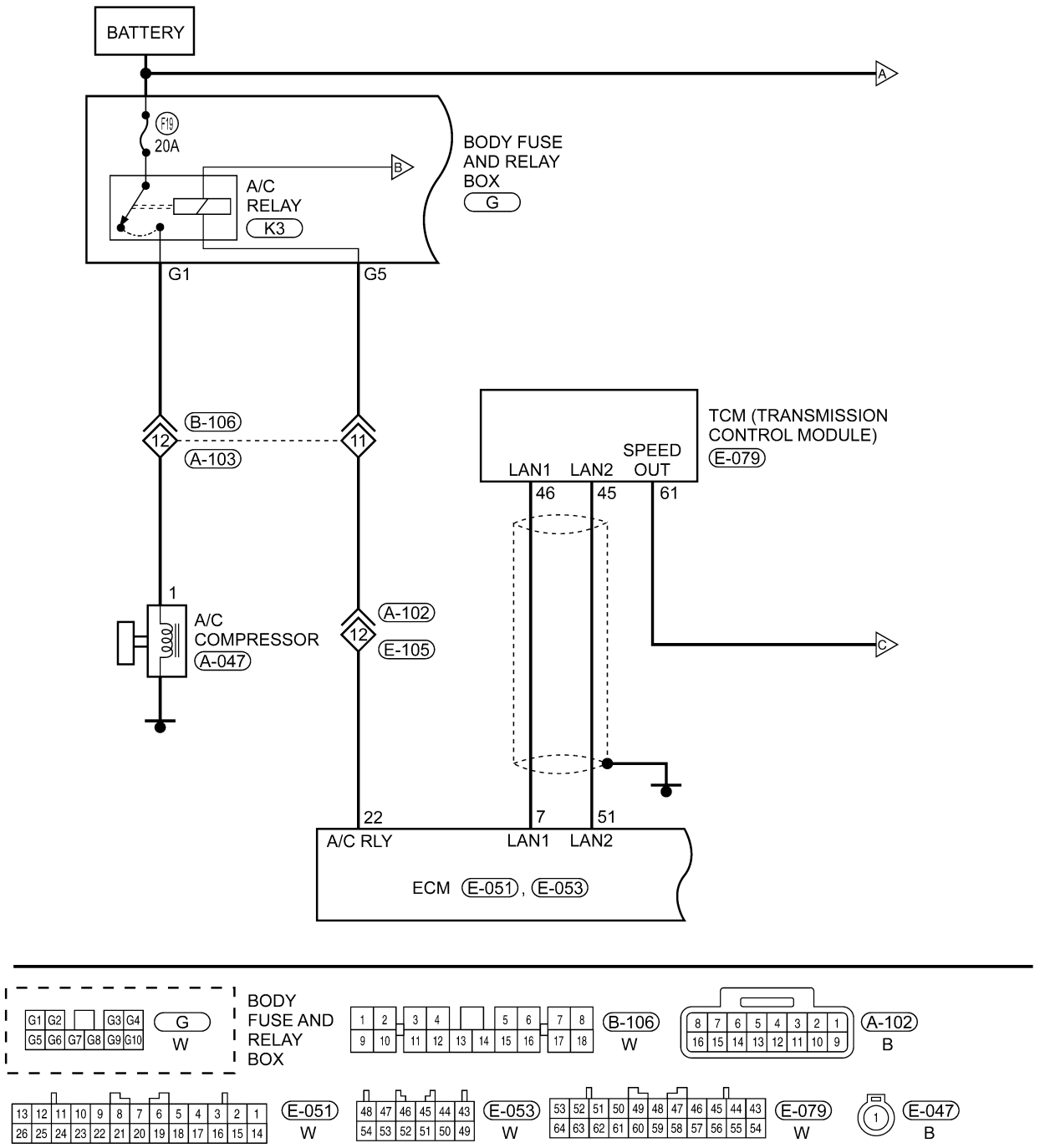

ltsmw030067t

Downloaded from www.Manualslib.com manuals search engine

Electronic Engine Controls (Page 2 of 10)

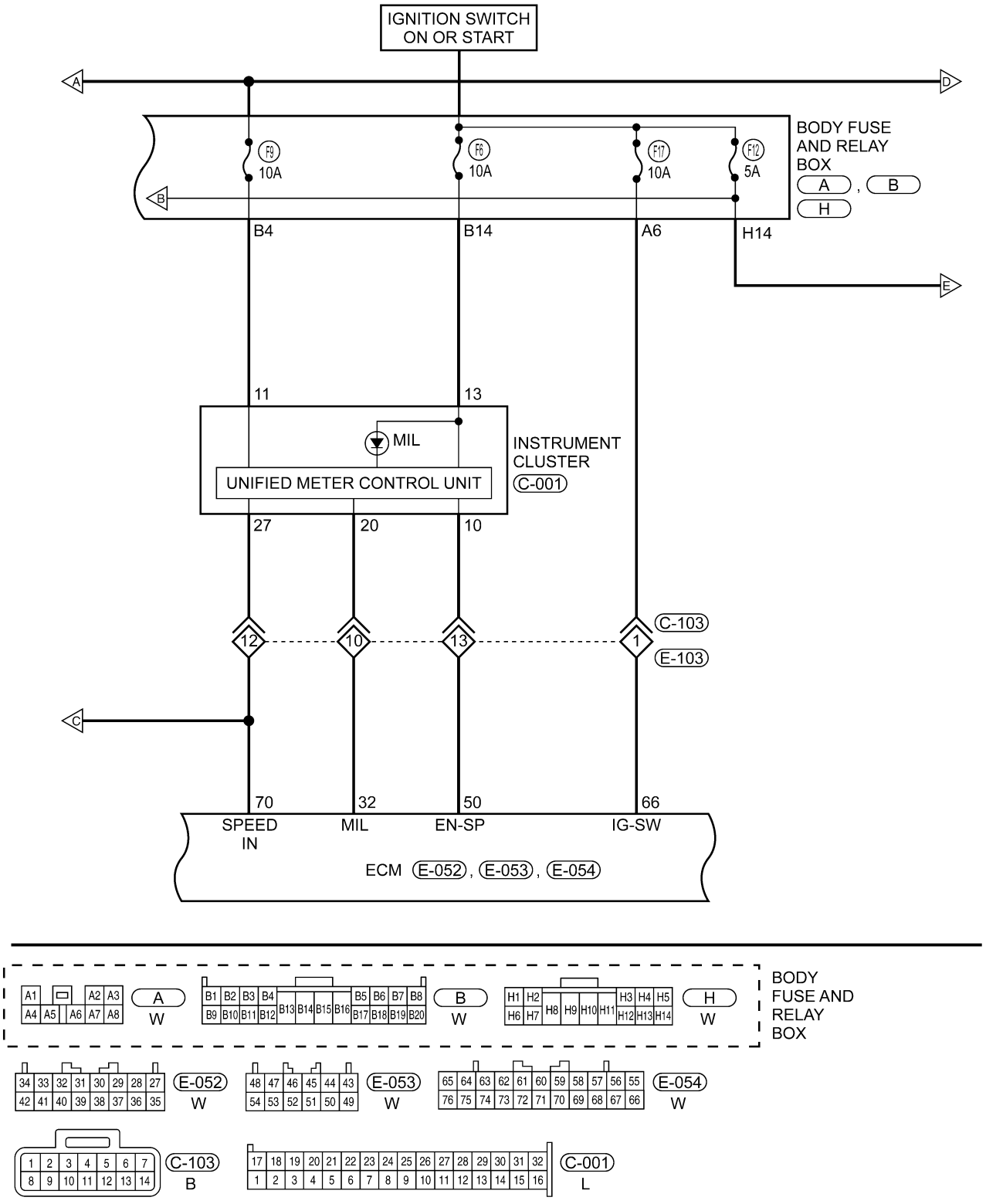

Downloaded from www.Manualslib.com manuals search engine

Electronic Engine Controls (Page 3 of 10)

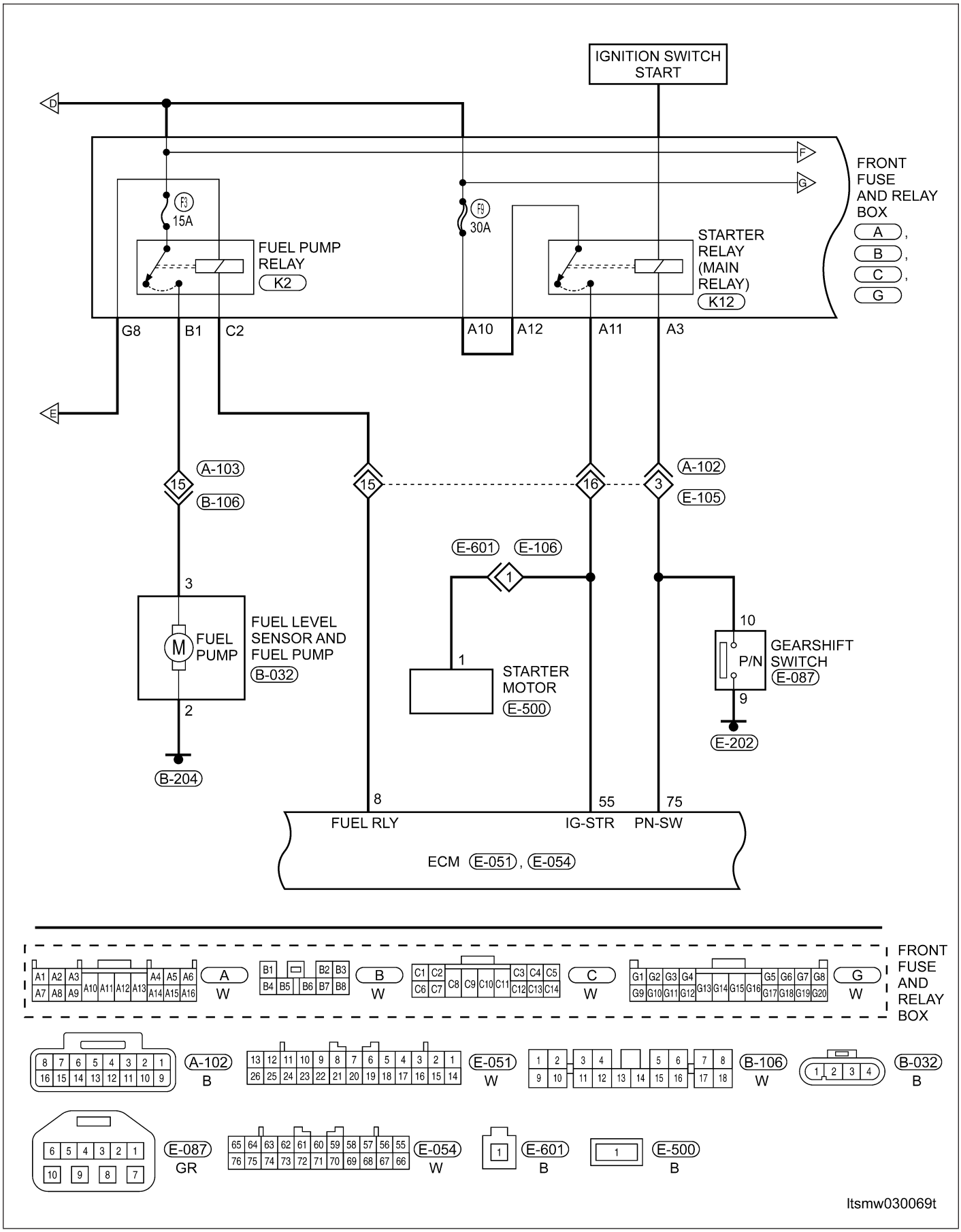

Downloaded from www.Manualslib.com manuals search engine

Electronic Engine Controls (Page 4 of 10)

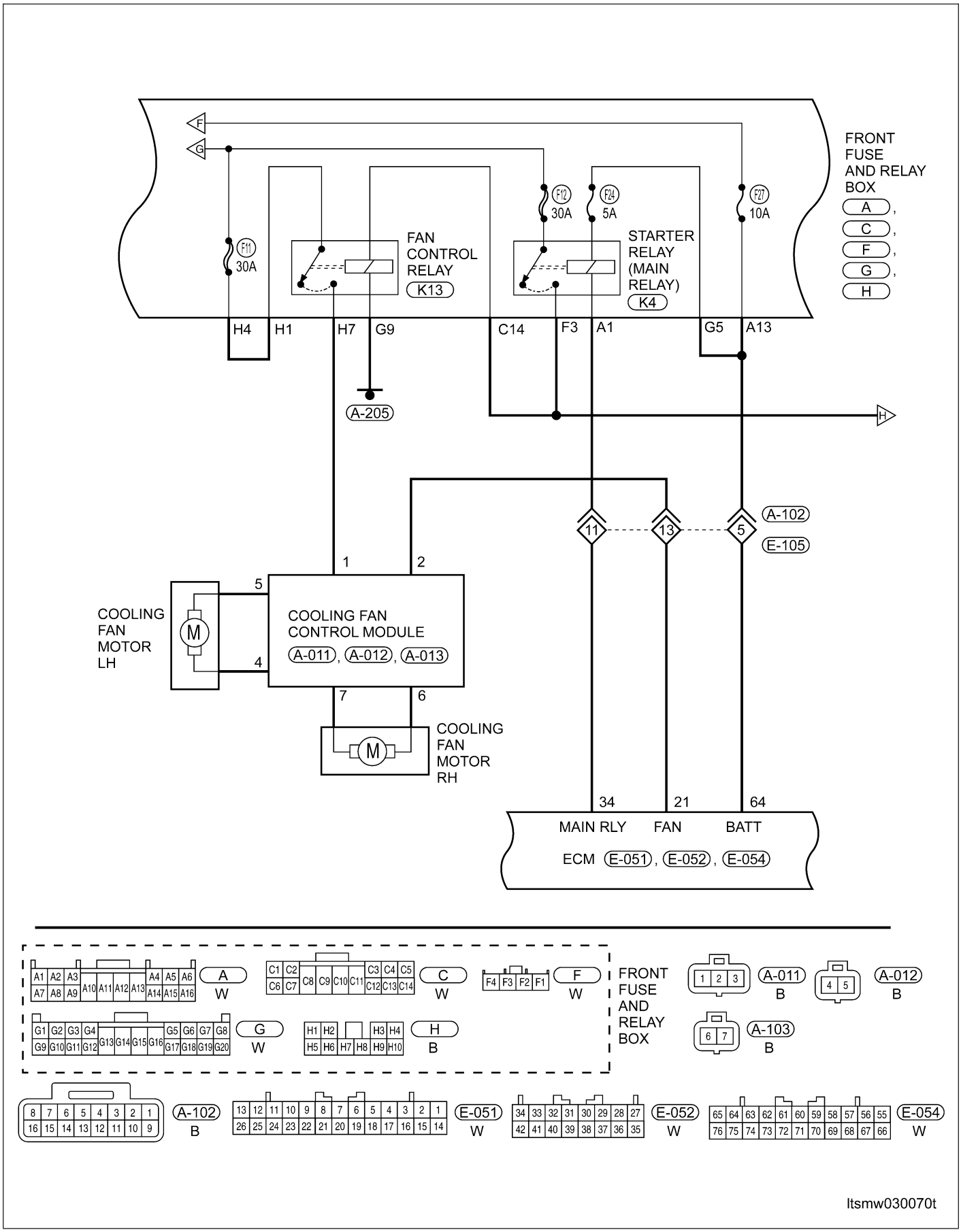

Downloaded from www.Manualslib.com manuals search engine

Electronic Engine Controls (Page 5 of 10)

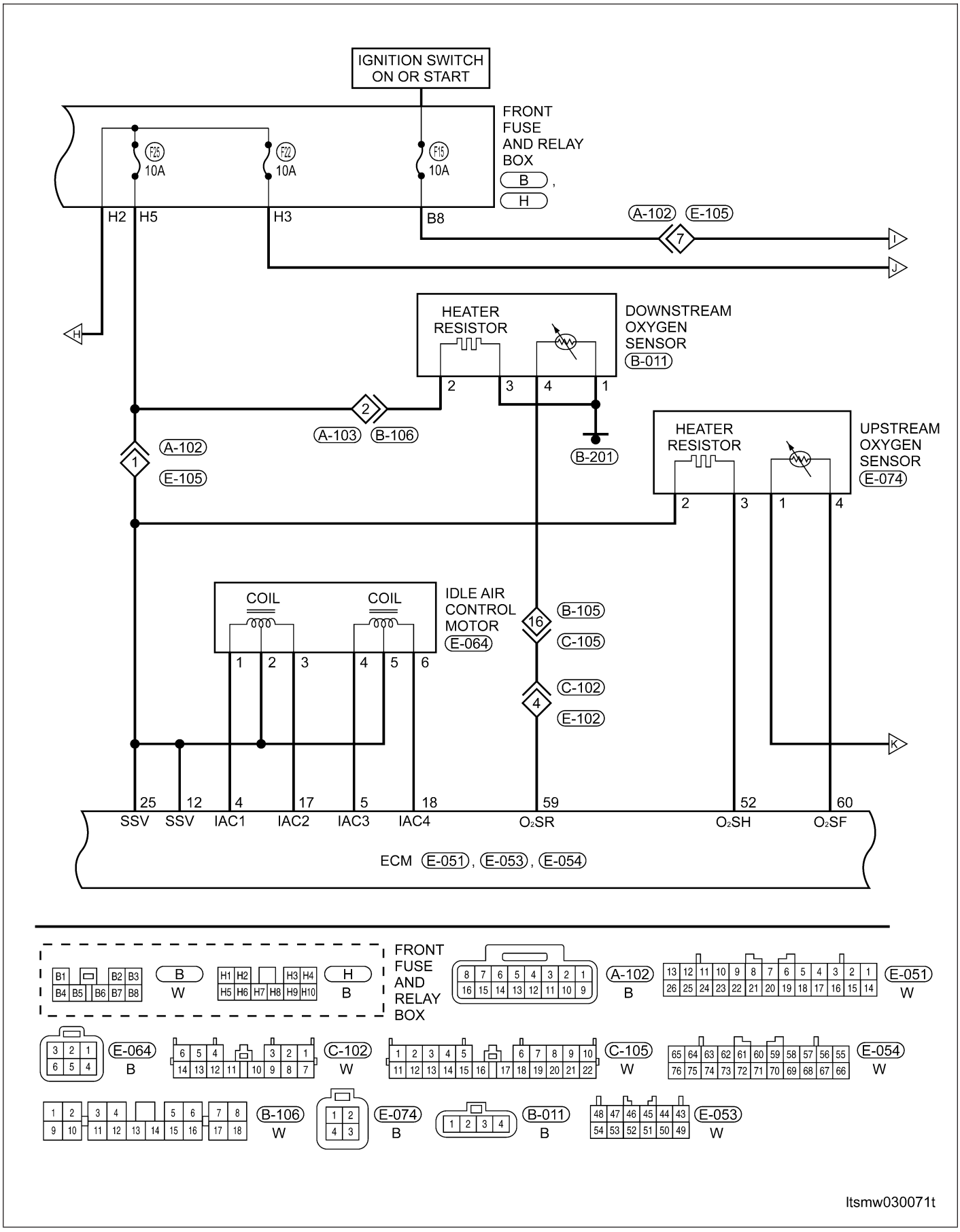

ltsmw030071t

Downloaded from www.Manualslib.com manuals search engine

Electronic Engine Controls (Page 6 of 10)

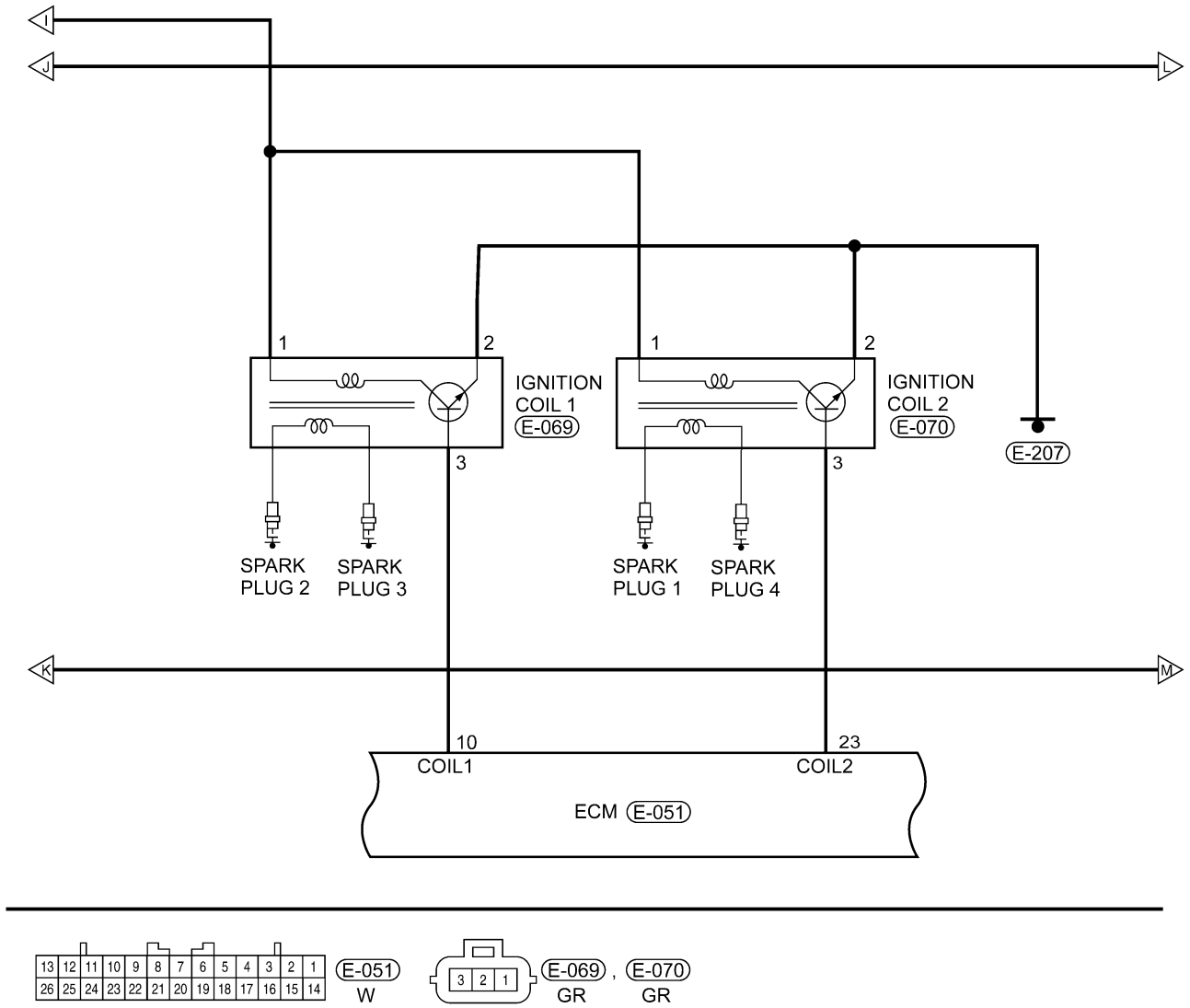

ltsmw030072t

Downloaded from www.Manualslib.com manuals search engine

Electronic Engine Controls (Page 7 of 10)

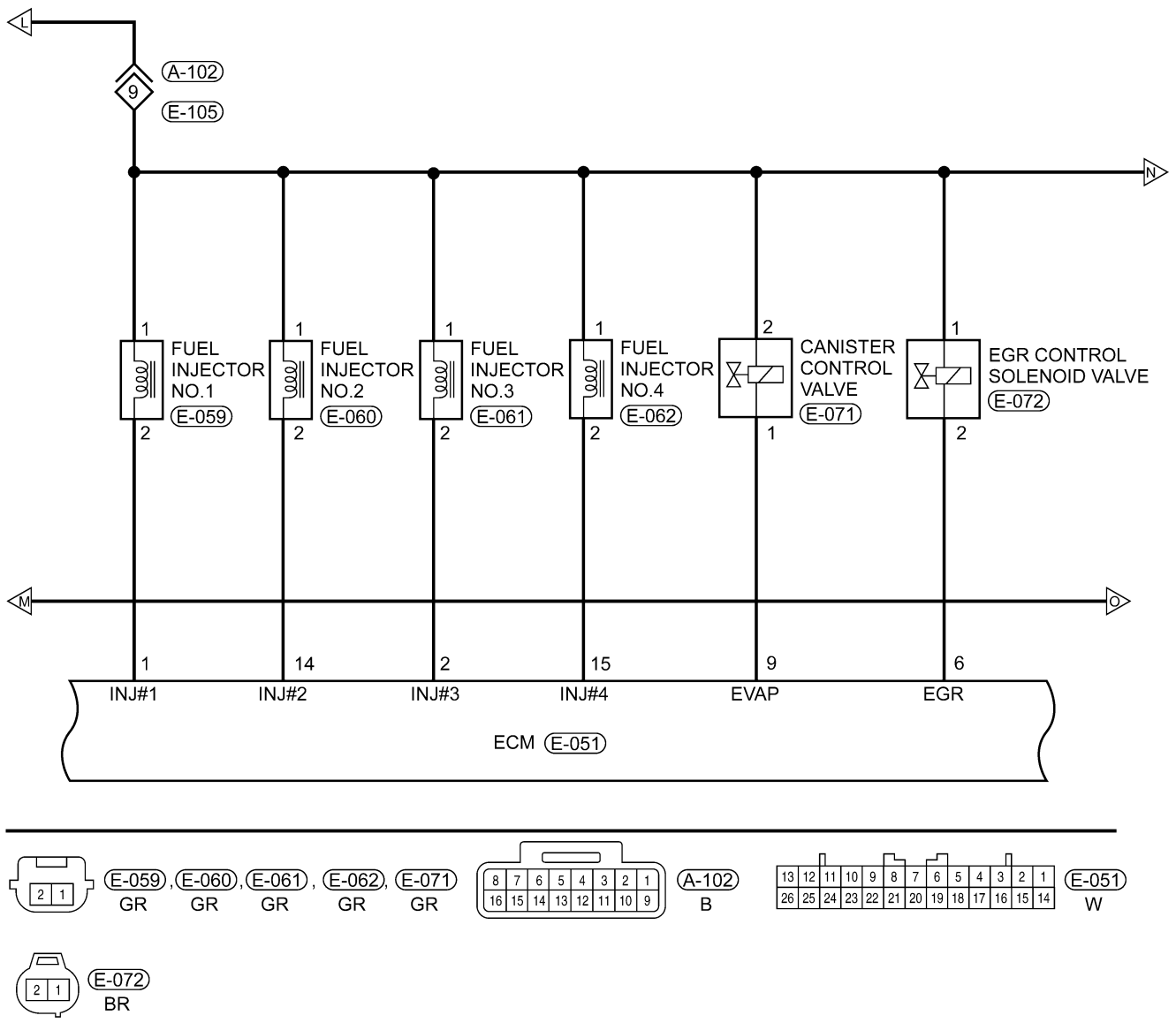

ltsmw030073t

Downloaded from www.Manualslib.com manuals search engine

Electronic Engine Controls (Page 8 of 10)

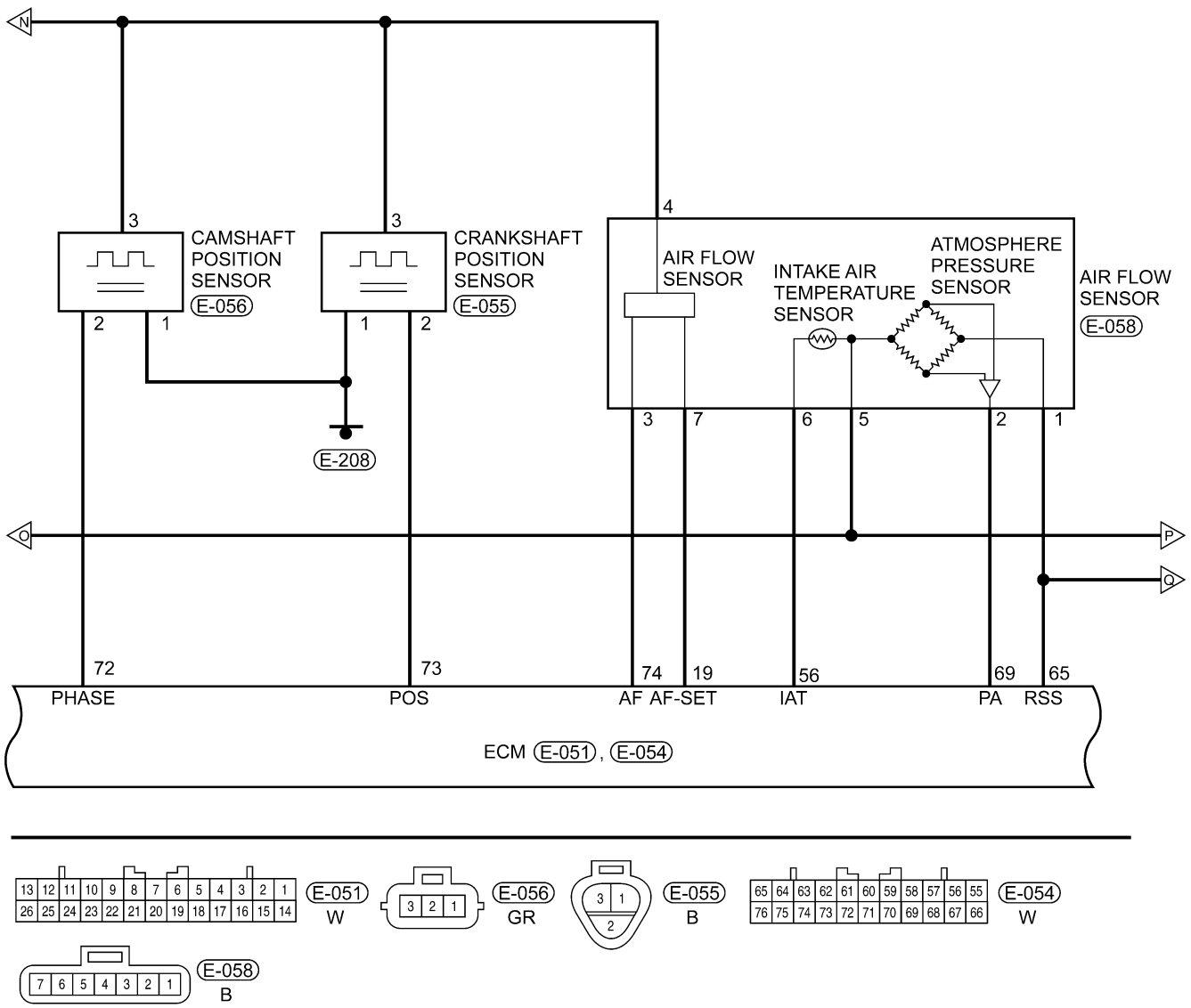

ltsmw030074t

Downloaded from www.Manualslib.com manuals search engine

Electronic Engine Controls (Page 9 of 10)

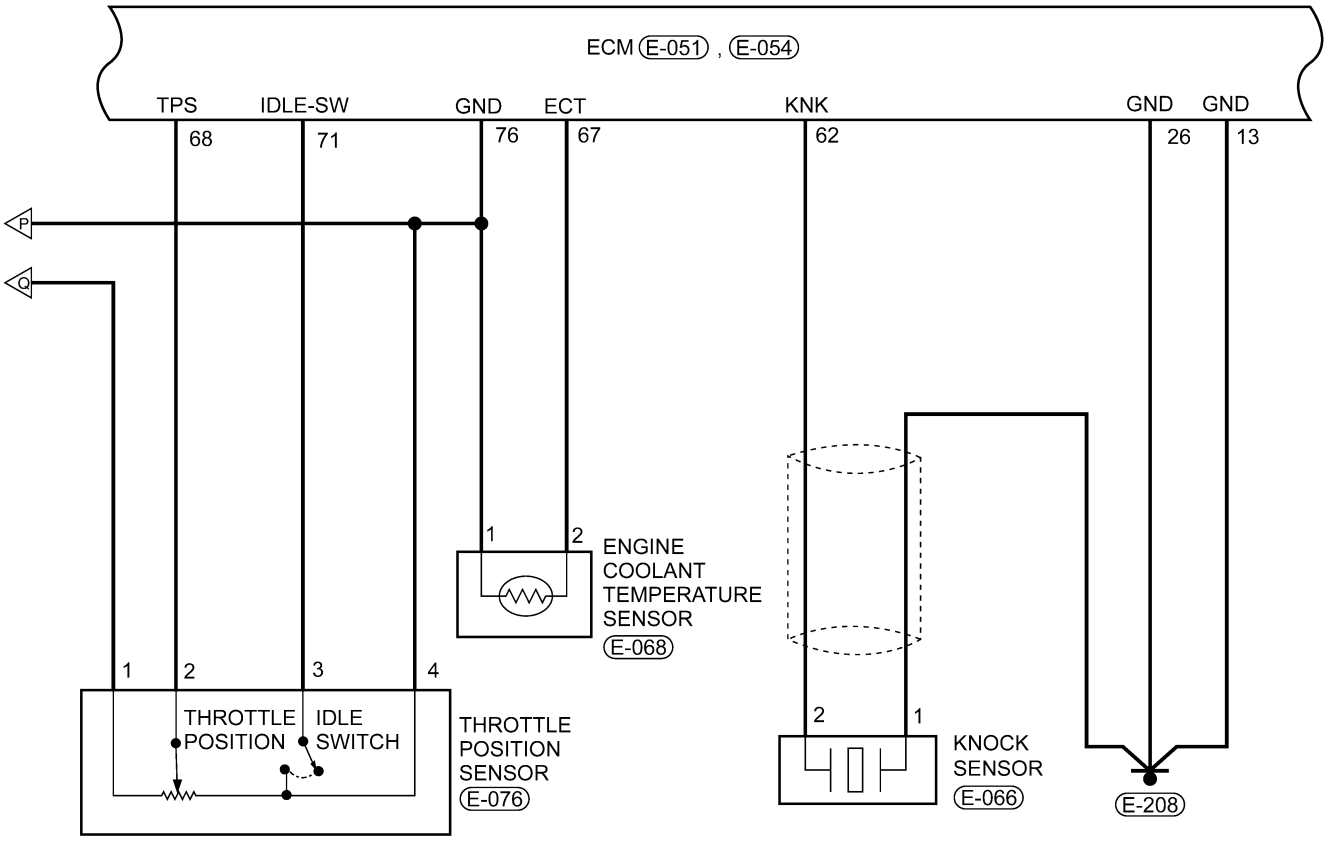

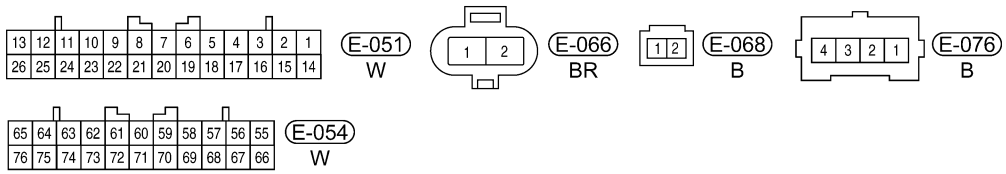

ltsmw030075t

Downloaded from www.Manualslib.com manuals search engine

Electronic Engine Controls (Page 10 of 10)

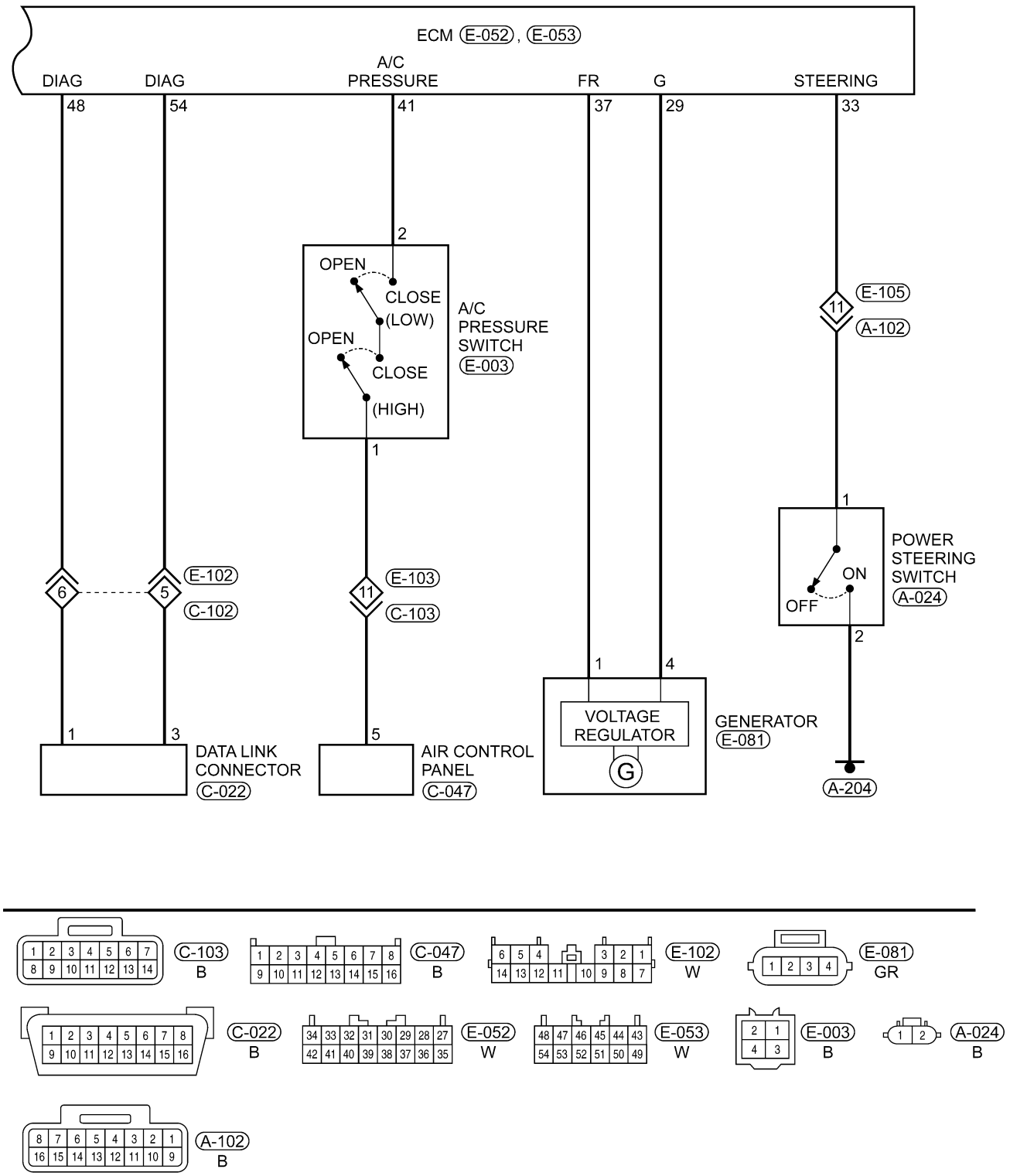

ltsmw030076t

Downloaded from www.Manualslib.com manuals search engine

ECM Connector Pin-Out Table

ECM PIN-OUT TABLE

PIN	CIRCUIT IDENTIFICATION	PIN	CIRCUIT IDENTIFICATION
1	Injector 1	39	-
2	Injector 3	40	-
3	-	41	A/C Pressure Switch
4	Idle Air Control 1	42	-
5	Idle Air Control 3	43	-
6	EGR Control	44	-
7	Lan 1	45	-
8	Fuel Pump Relay	46	-
9	EVAP Control	47	-
10	Ignition Coil 1	48	Diagnostic Link K
11	-	49	-
12	Switched Supply Voltage	50	RPM
13	GND	51	Lan 2
14	Injector 2	52	Upstream Oxygen Sensor Heater
15	Injector 4	53	-
16	-	54	Diagnostic Link K
17	Idle Air Control 2	55	Ignition Switch Start
18	Idle Air Control 4	56	Intake Air Temperature Sensor
19	Air Flow Sensor	57	-
20	-	58	-
21	Cooling Fan Control	59	Downstream Oxygen Sensor
22	A/C Relay	60	Upstream Oxygen Sensor
23	Ignition Coil 2	61	-
24	-	62	Knock Sensor
25	Switched Supply Voltage	63	-
26	GND	64	Continuous Supply Voltage
27	-	65	Regulated Sensor Supply
28	-	66	Ignition Switch On
29	Generator G	67	Engine Coolant Temperature Sensor
30	-	68	Throttle Position Sensor
31	-	69	Atmosphere Pressure Sensor
32	MIL Lamp	70	Speed In
33	Power Steering Switch	71	Idle Position Switch
34	Main Relay	72	Camshaft Position Sensor
35	-	73	Crankshaft Sensor
36	-	74	Air Flow Sensor
37	Generator FR	75	P/N Switch
38	-	76	Sensor (GND)

Downloaded from www.Manualslib.com manuals search engine

DIAGNOSIS & TESTING

Diagnostic Help

1. Confirm that the malfunction is current and carry-out the diagnostic tests and repair procedures.
2. If the Diagnostic Trouble Code (DTC) cannot be deleted, it is a current fault.
3. Use a digital multimeter to perform voltage readings on the Electronic Fuel Injection (EFI) system.
4. The scan tool connects to the Data Link Connector (DLC) and communicates with the ECM.
5. If the failure is intermittent perform the following:
   - Check for loose connectors.
   - Look for any chafed, pierced, pinched, or partially broken wires.
   - Monitor the scan tool data relative to this circuit and wiggle test the wiring and connectors.
   - Look for the data to change or for the DTC to reset during the wiggle test.
   - Look for broken, bent, pushed out or corroded terminals.
   - Inspect the sensor and mounting area for any condition that would result in an incorrect signal, such as damage or foreign material.
6. Remove the ECM from the troubled vehicle and install in a new vehicle and test. If the DTC can not be deleted, the ECM is malfunctioning. If the DTC can be deleted, return the ECM to the original vehicle.

Diagnostic Logic

If the DTC can not be deleted, it is a current failure.

If the DTC can be deleted, it is an intermittent incident. In many cases, the malfunction resolves itself (the part or circuit function returns to normal without intervention). It is important to realize that the symptoms described in the customer's complaint often do not recur on (1st trip) DTC visits. Realize also that the most frequent causes of intermittent incidents occurrences is poor electrical connections. Because of this, the conditions under which the incident occurred may not be clear. Therefore, circuit checks made as part of the standard diagnostic procedure may not indicate the specific malfunctioning area.

Check if it is because of the loosening of cable joint.

Look for any chafed, pierced, pinched, or partially broken wires.

Monitor the scan tool data relative to this circuit and wiggle test the wiring and connectors.

Look for the data to change or for the DTC to reset during the wiggle test.

Look for broken, bent, pushed out or corroded terminals.

Inspect the sensor and mounting area for any condition that would result in an incorrect signal, such as damage, foreign material.

Refer to any Technical Service Bulletins that may apply.

DIAGNOSTIC REFERENCE

- Check ground terminals for corroding or loose connection. Refer to ″Ground Inspection″.
- Search for electrical incident. Refer to ″Diagnosis for an Electrical Incident″.
- Check connector terminals. Refer to ″How to Check Terminal″.

DURING ENGINE CHECKS AND REPAIRS USE CAUTION NOT TO HARM THE ENGINE MECHANICAL SYSTEM

- Check cylinder pressure.
- Check ignition timing.
- Check fuel system pressure.
- Check the EVAP system.
- Check for vacuum leaks.
- Check output of the TPS.
- Check the injectors for leaks.

Remove and install the doubtful ECM to a new vehicle and test it. If the DTC can not be deleted, the malfunction is inside of ECM; if the DTC can be deleted, change the original ECM back and check it again according to above items.

Inspect and clean all ECM, engine, and body grounds that are related to the DTC. If numerous trouble codes were set, use a wire schematic and look for any common ground or supply circuits for any camshaft pulley DTCs inspect for dirt/metal debris.

Downloaded from www.Manualslib.com manuals search engine

Use the scan tool to perform a System Test if one applies to a failing component. A co-pilot, data recorder, and/or oscilloscope should be used to help diagnose intermittent conditions.

CAUTION:
Before starting repairs which do not require battery power:
- **Turn ignition switch off.**
- **Disconnect the negative battery terminal.**

Ground Inspection

Ground connections are very important to the proper operation of electrical and electronic circuits. Ground connections are often exposed to moisture, dirt and other corrosive elements. The corrosion (rust) can become an unwanted resistance. This added resistance can alter the way a circuit works.

Electronically controlled circuits are very sensitive to proper grounding. A loose or corroded ground can drastically affect an electronically controlled circuit. A poor or corroded ground can effect the circuit. Perform the following when inspecting a ground connection:

1. Remove the ground bolt or screw.
2. Inspect all mating surface for tarnish, dirt, rust, etc.
3. Clean as required to assure good contact.
4. Reinstall bolt or screw securely.
5. Inspect for ″add-on″ accessories which may be interfering with the ground circuit.
6. If several wires are crimped into one ground eyelet terminal, check for proper crimps. Make sure all of the wires are clean, securely fastened and providing a good ground path. If multiple wires are crimped to one eyelet, make sure no excess wire insulation has been crimped creating a bad ground.

Diagnostic Tools

1. Scan Tool X-431
2. Engine Analyzer (KES-200)
3. Digital Multimeter
4. Jumper Wire

Hardware Requirements

The hardware configuration of X-431 is as follows:

Downloaded from www.Manualslib.com manuals search engine

Diagnostic Scan Tool Configuration

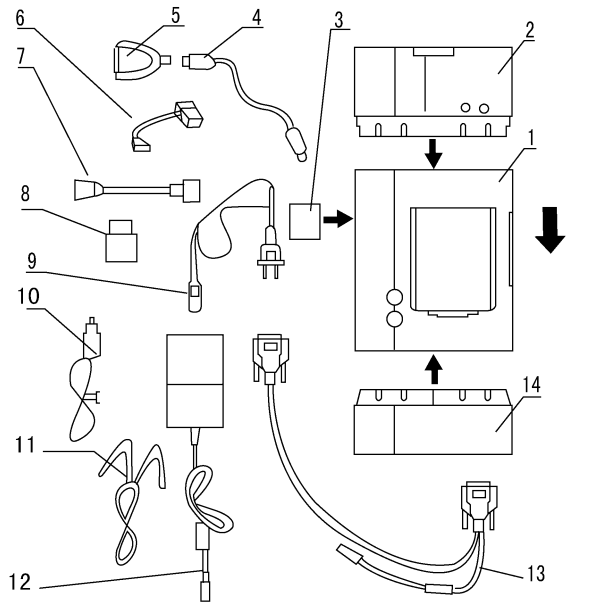

besm030003

ITEM	NAME	DESCRIPTION
1	X-431 Main Unit	To Display Operational Buttons, Test Results, Help Information, etc.
2	Mini-Printer	To Print Test Results. (Optional)
3	CF Card	To Store Diagnostic Software and Data
4	USB Cable	To Connect CF Card Reader/Writer and Computer
5	CF Card Reader/Writer	To Read or Write Data On The CF Card
6	Mitsubishi-12+16 Pin Connector	To Diagnose Mitsubishi Electronic Control Systems On Chery B11 Series
7	Fiat-3 Pin Connector	To Diagnose Vehicles With Fiat-3 Pin Diagnostic Connector

ITEM	NAME	DESCRIPTION
8	Smart OBDII-16 Pin Connector	To Diagnose Other Systems Of Vehicle With OBDII-16 Pin Diagnostic Connector
9	Power Cord	To Connect AC 100 - 240 V Outlet and Power Adapter
10	Cigarette Lighter Cable	To Get Power From Vehicle Cigarette Lighter
11	Battery Cable W/Two Clips	To Get Power From Vehicle Battery
12	Power Adapter	To Convert 100 - 240 V AC Power Into 12 V DC Power
13	Main Cable	To Connect The Diagnostic Connector and Smartbox
14	Smartbox	To Perform Vehicle Diagnosis

Downloaded from www.Manualslib.com manuals search engine

Diagnostic Trouble Code (DTC) List

DTC	DTC DEFINITION
11	Oxygen Sensor
12	Air Flow Sensor
13	Air Temperature Sensor
14	Throttle Position Sensor
21	Coolant Temperature Sensor
22	Crankshaft Position Sensor
23	Camshaft Position Sensor
24	Speed Sensor
25	Atmosphere Pressure Sensor
31	Knock Sensor
36	Ignition Signal Terminal
41	Injector
44	Ignition Signal
54	Immobilizer Communication
61	Electronic 4AT Communication
64	ALT FR Signal

Downloaded from www.Manualslib.com manuals search engine

ECM Power Supply and Ground Circuit Test

Power Supply And Ground Circuit Diagnostic Check

EEC - 2.4L - PWR - 01

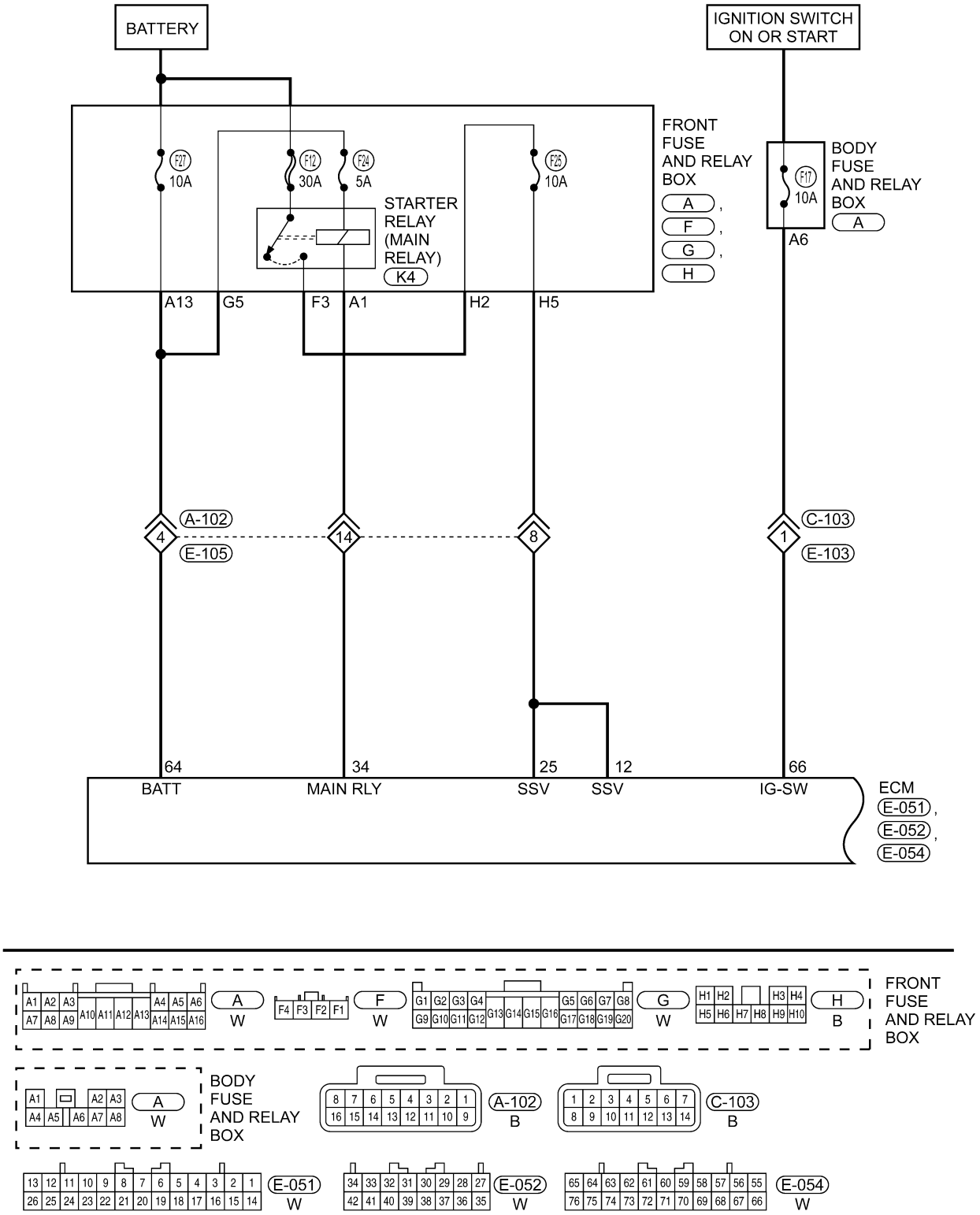

Downloaded from www.Manualslib.com manuals search engine

Check reference values between ECM terminals and ground under the following conditions:

TERMINAL NO.	ITEM	CONDITION	DATA (DC VOLTAGE)
12	Power supply for ECM	Ignition switch: ON	Battery Voltage (11 - 14 V)
25			
34	ECM relay	Ignition switch: OFF More than a few seconds after turning ignition switch OFF	Battery Voltage (11 - 14 V)
64	Battery	All time	Battery Voltage (11 - 14 V)
66	Ignition switch	Ignition switch: ON	Battery Voltage (11 - 14 V)
		Ignition switch: OFF	Approximately 0 V

Downloaded from www.Manualslib.com manuals search engine

EEC - 2.4L - GND - 01

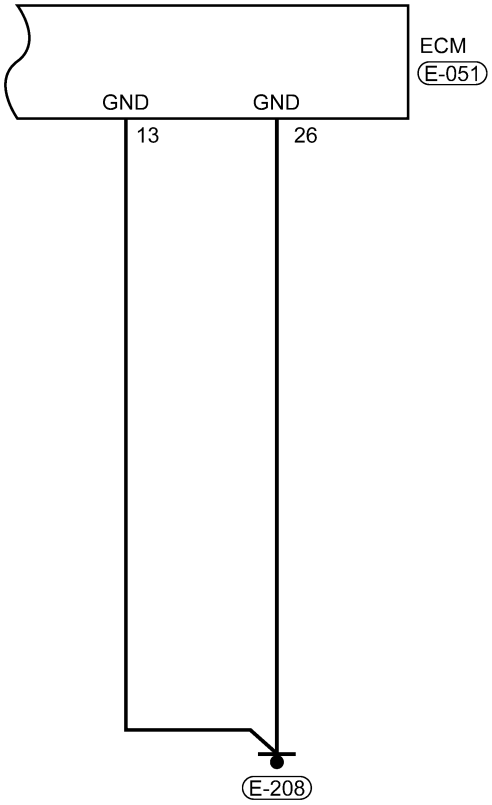

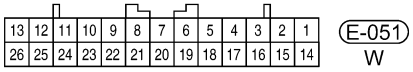

ltsmw030004t

Downloaded from www.Manualslib.com manuals search engine

Specification data are reference values and are measured between each terminal and ground.

TERMINAL NO.	ITEM	CONDITION	DATA (DC VOLTAGE)
13	ECM ground	Ignition switch: ON	Approximately 0 V
26	ECM ground	Ignition switch: ON	Approximately 0 V

Confirmation Procedure:

Before performing the following procedure, confirm that battery voltage is more than 12 V.
- Turn ignition switch off.
- Connect the X-431 scan tool to the Data Link Connector (DLC) - use the most current software available.
- Start the engine and warm it to normal operating temperature.
- With the scan tool, select view data stream.
- If the data stream is not detected, the condition is current. Go to Diagnostic Procedure Step 1.
- If the data stream is detected, the condition is intermittent (See Diagnosis & Testing Diagnostic Help in Section 03 Electronic Engine Controls).

NOTE :
While performing electrical diagnosis & testing, always refer to the electrical schematics for specific circuit and component information.

Diagnostic Procedure

1. INSPECTION START

- Start engine.

Is engine running?

Yes >> Go to step 8.

No >> Go to step 2.

2. CHECK ECM POWER SUPPLY CIRCUIT - (1)

- Turn ignition switch OFF and then ON position.
- Check voltage between ECM terminal 66 and ground.
- Battery voltage should exist.

Is the check result normal?

Yes >> Go to step 5.

No >> Go to step 3.

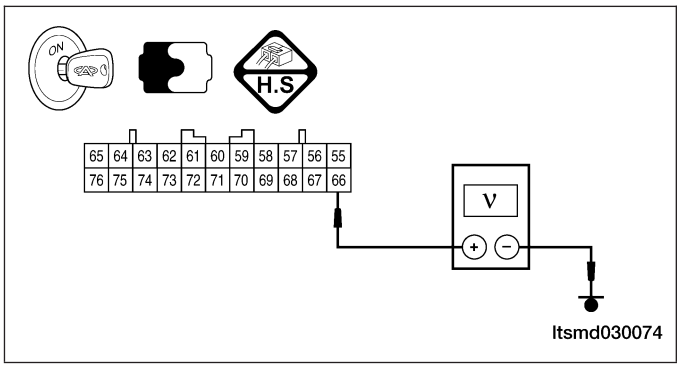

Downloaded from www.Manualslib.com manuals search engine

3. DETECT MALFUNCTIONING PART

- Check the following:
  - Fuse 17
  - Harness connectors C-103, E-103, terminal 1
  - Front fuse and relay box connector A
  - Harness open or short between ECM and fuse

Is the check result normal?

Yes >> Go to the next step.

No >> Repair or replace malfunctioning parts.

4. CHECK ECM POWER SUPPLY CIRCUIT - (2)

- Check voltage between ECM terminal 64 and ground.
- Battery voltage should exist.

Is the check result normal?

Yes >> Go to the next step.

No >> Check the following:

– Harness connectors A-102, E-105, terminal 4
– Front fuse and relay box connector A
– Harness open or short between ECM and battery

5. CHECK GROUND CONNECTIONS

- Turn ignition switch off.
- Loosen and retighten ground screws on the body.

Is the check result normal?

Yes >> Go to the next step.

No >> Repair or replace ground connections.

6. CHECK ECM GROUND CIRCUIT FOR AN OPEN OR SHORT

- Disconnect ECM harness connector.
- Check harness continuity between ECM terminals 13, 26 and ground.
- Continuity should exist.
- Also check harness for short to power.

Is the check result normal?

Yes >> Go to step 8.

No >> Go to the next step.

7. DETECT MALFUNCTIONING PART

- Check harness for open or short between ECM terminals 13, 26 and ground.
- Repair open circuit or short to power in harness or connectors.

Is the check result normal?

Yes >> Go to the next step.

No >> Repair circuit for an open or short to power in harness or connectors.

Downloaded from www.Manualslib.com manuals search engine

8. CHECK ECM POWER SUPPLY CIRCUIT - (3)

- Turn ignition switch on and then off.
- Check voltage between ECM terminals 12, 25 and ground.
- Voltage: Turn ignition switch on battery voltage will be exist and after turning ignition switch off, battery voltage will exist a few seconds, then drop to approximately 0 V.

Is the check result normal?

Yes >> Check the starting system.

No >> Go to the next step.

9. CHECK STARTER RELAY SUPPLY VOLTAGE

- Turn ignition switch off. Wait for at least 10 seconds.
- Check voltage between ECM terminal 34 and ground.
- Battery voltage should exist.

Is the check result normal?

Yes >> Go to the next step.

No >> Go to step 11.

10. CHECK ECM POWER SUPPLY CIRCUIT - (4)

- Disconnect ECM harness connector.
- Disconnect front fuse and relay box harness connector F.
- Check harness continuity between ECM terminals 12, 25 and front fuse and relay box terminal F3.
- Continuity should exist.
- Also check harness for short to ground and short to power.

Is the check result normal?

Yes >> Go to step 12.

No >> Repair circuit for an open or short in harness or connectors.

11. CHECK STARTER RELAY CIRCUIT

- Disconnect ECM harness connector.
- Disconnect front fuse and relay box harness connector A, G.
- Check harness continuity between ECM terminal 34 and front fuse and relay box terminal A1.
- Check harness continuity between front fuse and relay box terminal A1 and G5,
- Check harness continuity between front fuse and relay box terminal A13 and G5,
- Continuity should exist.
- Also check harness for short to ground and short to power.

Is the check result normal?

Yes >> Go to the next step.

No >> Repair circuit for an open or short to ground or short to power in harness or connectors.

Downloaded from www.Manualslib.com manuals search engine

12. CHECK FUSE

- Disconnect fuse 12 (30A), fuse 24 (5A), fuse 25 (10A), front fuse and relay box.
- Check fuse.

Is the check result normal?

Yes >> Go to the next step.

No >> Replace fuse 12, 23, 24.

13. CHECK FRONT FUSE AND RELAY BOX

- Check front fuse and relay box.
- Check harness continuity between front fuse and relay box and battery.

Is the check result normal?

Yes >> Replace the ECM.

No >> Replace or repair front fuse and relay box or harness.

Downloaded from www.Manualslib.com manuals search engine

Diagnostic Trouble Code (DTC) Tests

11 - Oxygen Sensor

EEC - 2.4L - O_2S - 01

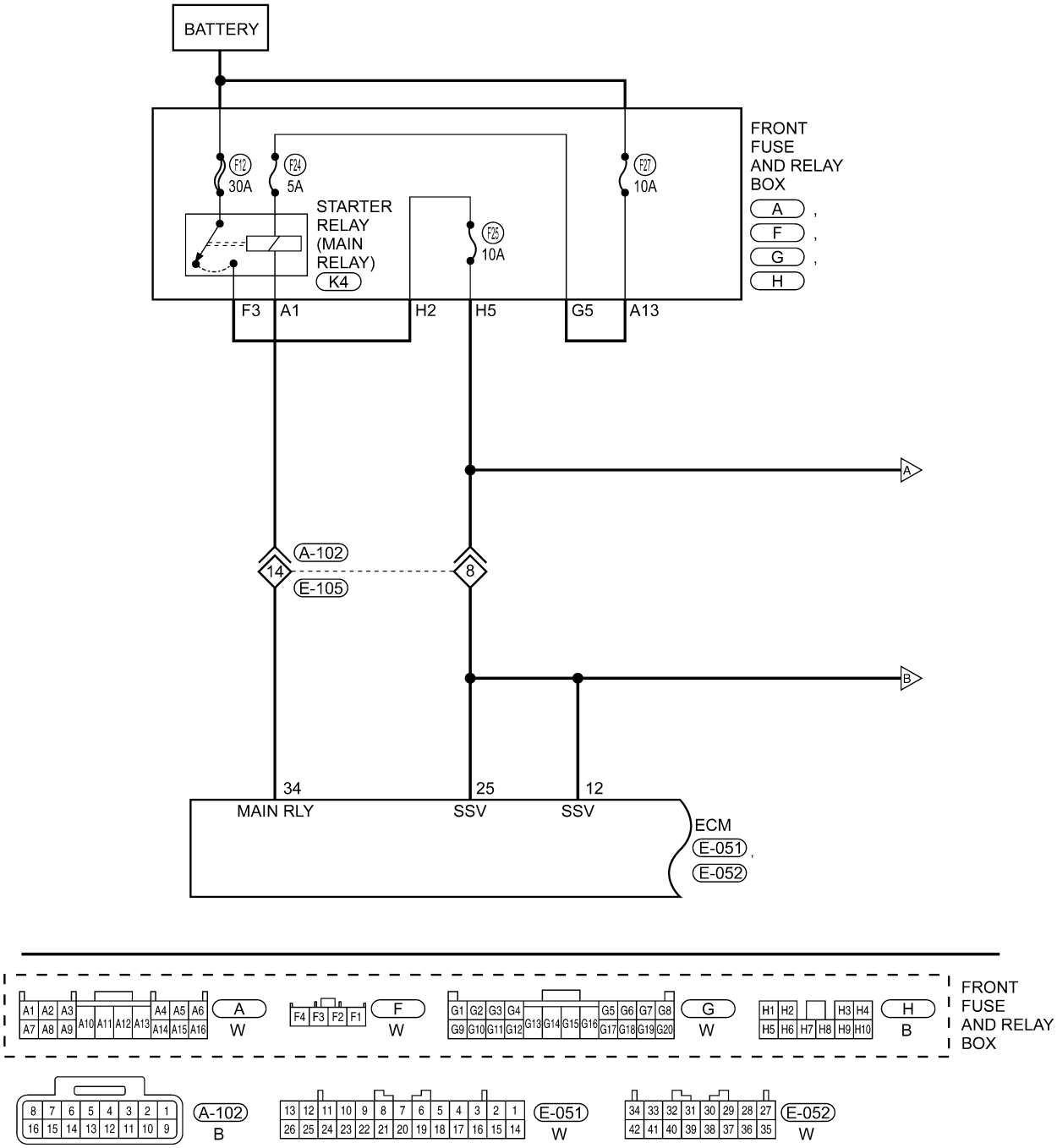

ltsmw030016t

Downloaded from www.Manualslib.com manuals search engine

EEC - 2.4L - O_2S - 02

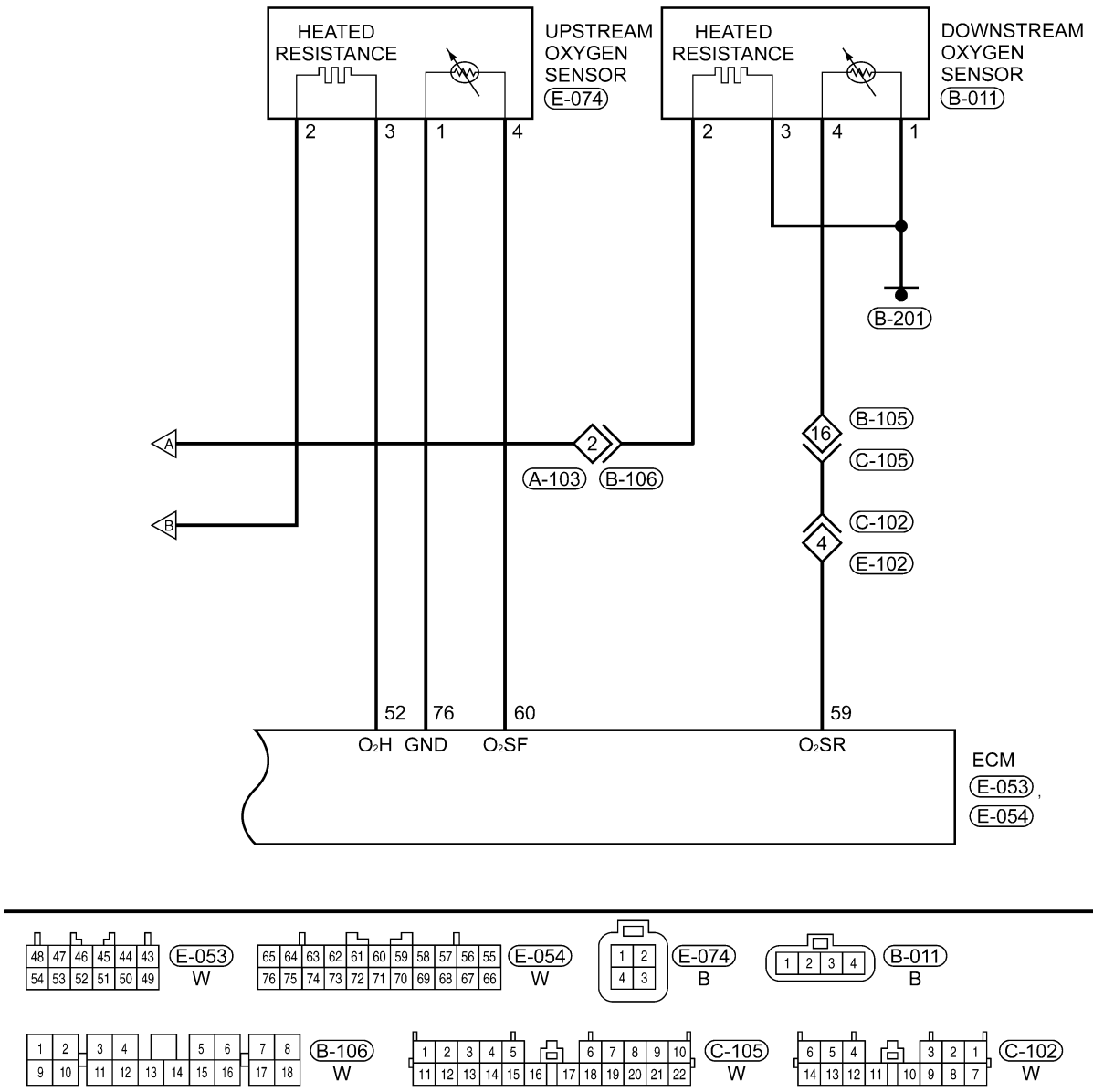

ltsmw030017t

Downloaded from www.Manualslib.com manuals search engine

ECM TERMINAL NO.	ITEM	CONDITION	DATA (DC VOLTAGE)
52	Upstream oxygen sensor heating	• Warm-up condition • Idle	0 - 3 V
		• Engine is running • Keep the engine speed 5000 RPM	System voltage
59	Downstream oxygen sensor	• Engine is running • Warm-up condition • Keep the engine speed 2000 RPM	0 - 0.8 V (recycle)
60	Upstream oxygen sensor	• Engine is running • Warm-up condition • Keep the engine speed 2000 RPM	0 - 0.8 V (recycle)
76	Sensor (GND)	• Warm-up condition • Idle	Approximately 0 V

On Board Diagnostic Logic

- Self-diagnosis detection logic.

DTC NO.	DTC DEFINITION	DTC DETECTION CONDITION	POSSIBLE CAUSE
11	Oxygen sensor	Engine is running	• Fuel quality • Oxygen sensor • Harness or connectors • ECM

DTC Confirmation Procedure:

Before performing the following procedure, confirm that battery voltage is more than 12 V.

- Turn ignition switch off.
- Connect the X-431 scan tool to the Data Link Connector (DLC) - use the most current software available.
- Turn ignition switch on.
- With the scan tool, record and erase stored DTCs in the ECM.
- Start engine and warm it up to the normal operating temperature.
- Turn ignition switch off and wait at least 10 seconds.
- Start engine and keep the engine speed 2000 RPM for at least 1 minute.
- Let engine idle for 2 minutes and select view DTC.
- If DTC is detected, go to Diagnostic Procedure - Step 1.
- If the DTC is not detected, the DTC condition is intermittent (See Diagnosis & Testing Diagnostic Help in Section 03 Electronic Engine Controls).

NOTE :
Before performing the following procedure, make sure that ECM ground connections are in good condition.

NOTE :
While performing electrical diagnosis & testing, always refer to the electrical schematics for specific circuit and component information.

Downloaded from www.Manualslib.com manuals search engine

Diagnostic Procedure

1. CHECK GROUND CONNECTION.

- Turn ignition switch off.
- Loosen and retighten ground screws on the body (See Ground Inspection in Section 03 Electronic Engine Controls).
- Inspect the ground connection B-201 (See Vehicle Wiring Harness Layout - Body Harness in Section 16 Wiring).
- Inspect the ground connection E-208 (See Vehicle Wiring Harness Layout - Engine Control Harness (With MITSUBISHI 2.4L Engine) in Section 16 Wiring).

Are the ground connections OK?

Yes >> Go to the next step.

No >> Repair or replace the ground connection.

2. CHECK UPSTREAM O_2 SENSOR ELECTRICAL CONNECTOR

- Disconnect the upstream O_2 sensor (1) electrical connector.
- Inspect the electrical connector for damage.

Is the electrical connector OK?

Yes >> Go to the next step.

No >> Repair or replace the electrical connector as necessary.

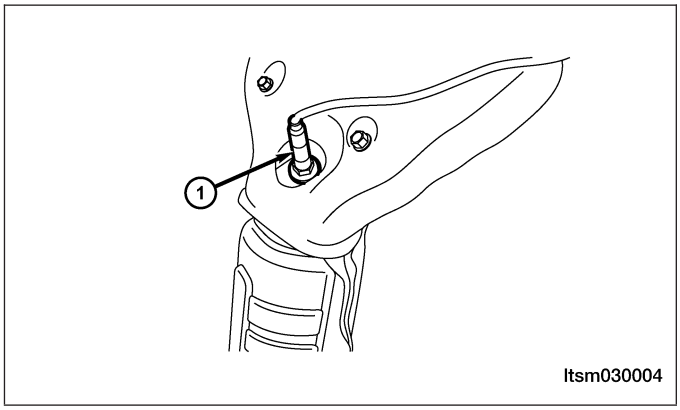

3. CHECK DOWNSTREAM O_2 SENSOR ELECTRICAL CONNECTOR

- Disconnect the downstream O_2 sensor (2) electrical connector.
- Inspect the electrical connector for damage.

Is the electrical connector OK?

Yes >> Go to the next step.

No >> Repair or replace the electrical connector as necessary.

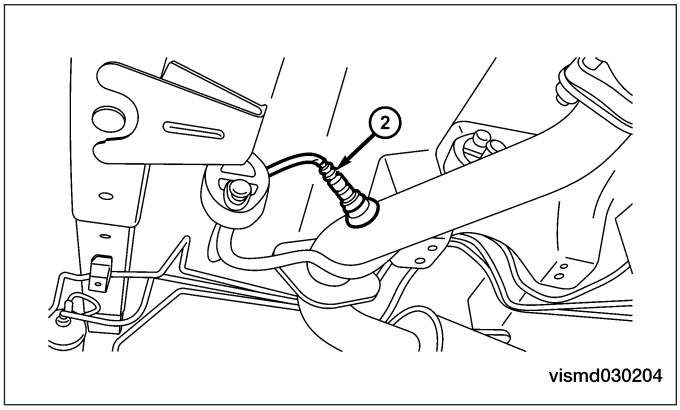

Downloaded from www.Manualslib.com manuals search engine

4. CHECK THE O_2 SENSOR GROUND CIRCUIT FOR AN OPEN OR SHORT

- Disconnect ECM harness connector.
- Check harness continuity between upstream O_2 sensor terminal 1 in connector E-074 and ECM terminal 76 in connector E-054.
- Check harness continuity between downstream O_2 sensor terminal 1 in connector B-011 and ground.
- Continuity should exist.
- Check harness for a short to power and short to ground.

Is the check result normal?

Yes >> Go to the next step.

No >> Repair the circuits for an open or short to power or short to ground in harness or connectors.

5. CHECK THE O_2 SENSOR INPUT SIGNAL CIRCUIT FOR AN OPEN OR SHORT

- Check harness continuity between ECM terminal and O_2 sensor terminal as follows.
- Continuity should exist.
- Check harness continuity between following terminals and ground.
- Continuity should not exist.

COMPONENT	ECM TERMINAL	O_2 SENSOR TERMINAL
Upstream O_2 sensor	60	4
Downstream O_2 sensor	59	4

- Also Check harness short to power supply circuit.

Is the check result normal?

Yes >> Go to the next step.

No >> Repair circuit for an open or short to power or short to ground in harness or connectors.

6. CHECK O_2 SENSOR POWER SUPPLY

- Turn ignition switch on.
- Check power supply between O_2 sensor E-074, terminal 2 and ground.
- Battery voltage should exist.

Is the check result normal?

Yes >> Go to step 8.

No >> Go to the next step.

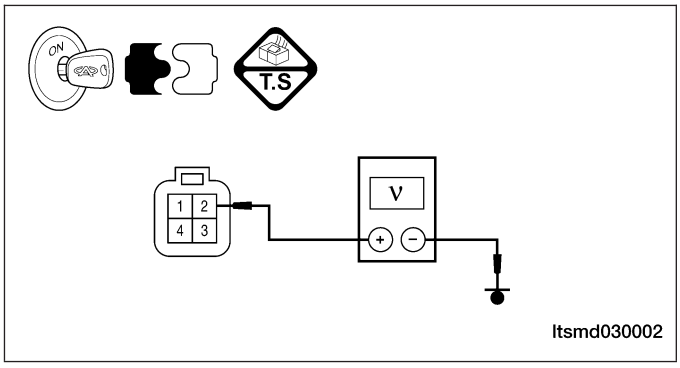

Downloaded from www.Manualslib.com manuals search engine

7. DETECT MALFUNCTIONING PART

- Check the following:
  - Fuse 25, Fuse 12, Fuse 24
  - Front fuse and relay box H5
  - Harness connectors A-102, E-105
  - Harness open or short between O_2 sensor and fuse

Is the check result normal?

Yes >> Go to the next step.

No >> Repair or replace malfunctioning parts.

8. CHECK O_2 SENSOR HEATER CONTROL CIRCUIT FOR AN OPEN AND SHORT

- Turn ignition switch off.
- Check harness continuity between ECM terminal and O_2 sensor terminal.

COMPONENTS	ECM	O_2 SENSOR
TERMINAL	52	3

- Continuity should exist.
- Check harness short to power supply circuit and ground.

Is the check result normal?

Yes >> Go to the next step.

No >> Repair the circuit for an open or short to power supply circuit or ground in harness or connectors.

9. CHECK O_2 SENSOR HEATER

- Check resistance between O_2 sensor terminals.

TERMINAL NO.	RESISTANCE
2 & 3 (including cable and connector)	Approximately 9 Ω
1 & 2 and 1 & 3	∞ Ω (Continuity should not exist)
4 & 2 and 4 & 3	

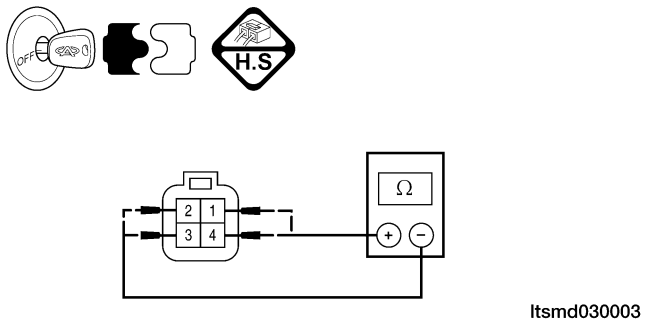

Is the check result normal?

Yes >> Go to the next step.

No >> Replace O_2 sensor.

Downloaded from www.Manualslib.com manuals search engine

10. CHECK O_2 SENSOR

- Connect O_2 sensor connector.
- Connect ECM connector.
- If with the X-431, reference data stream value.
- If without the X-431, as following.
  - Start engine and warm it up to normal operating temperature.
  - Turn ignition switch off.
  - Start engine and keep the engine speed between 3.500 and 4,000 RPM for at least 1 minute.
  - Let engine idle for 1 minute.
  - Set digital multimeter probes between ECM terminal 60 and ground.

CHECK ITEM	CHECK CONTENT		NORMAL VALUE
Oxygen sensor	• Warm-up condition • Become lean while decelerate	Decelerate from 4,000 RPM suddenly	below 200 mV
	• Warm-up condition • Become rich while accelerate	Accelerate suddenly	600 - 1,000 mV
	• Warm-up condition • Check with O_2 sensor signal	Idle	100 - 900 mV
		2500 RPM	600 - 1,000 mV

Is the check result normal?

Yes >> Go to the next step.

No >> Replace O_2 sensor.

11. CHECK DTC

- With the X-431 scan tool, read ECM DTCs.
- Refer to ″DTC Confirmation Procedure″.

Is DTC 11 still present?

Yes >> Replace the ECM.

No >> The system is now operating properly.
Reassemble the vehicle and road test to verify the customers complaint is repaired.

Downloaded from www.Manualslib.com manuals search engine

12 - Air Flow Sensor

EEC - 2.4L - MAF - 01

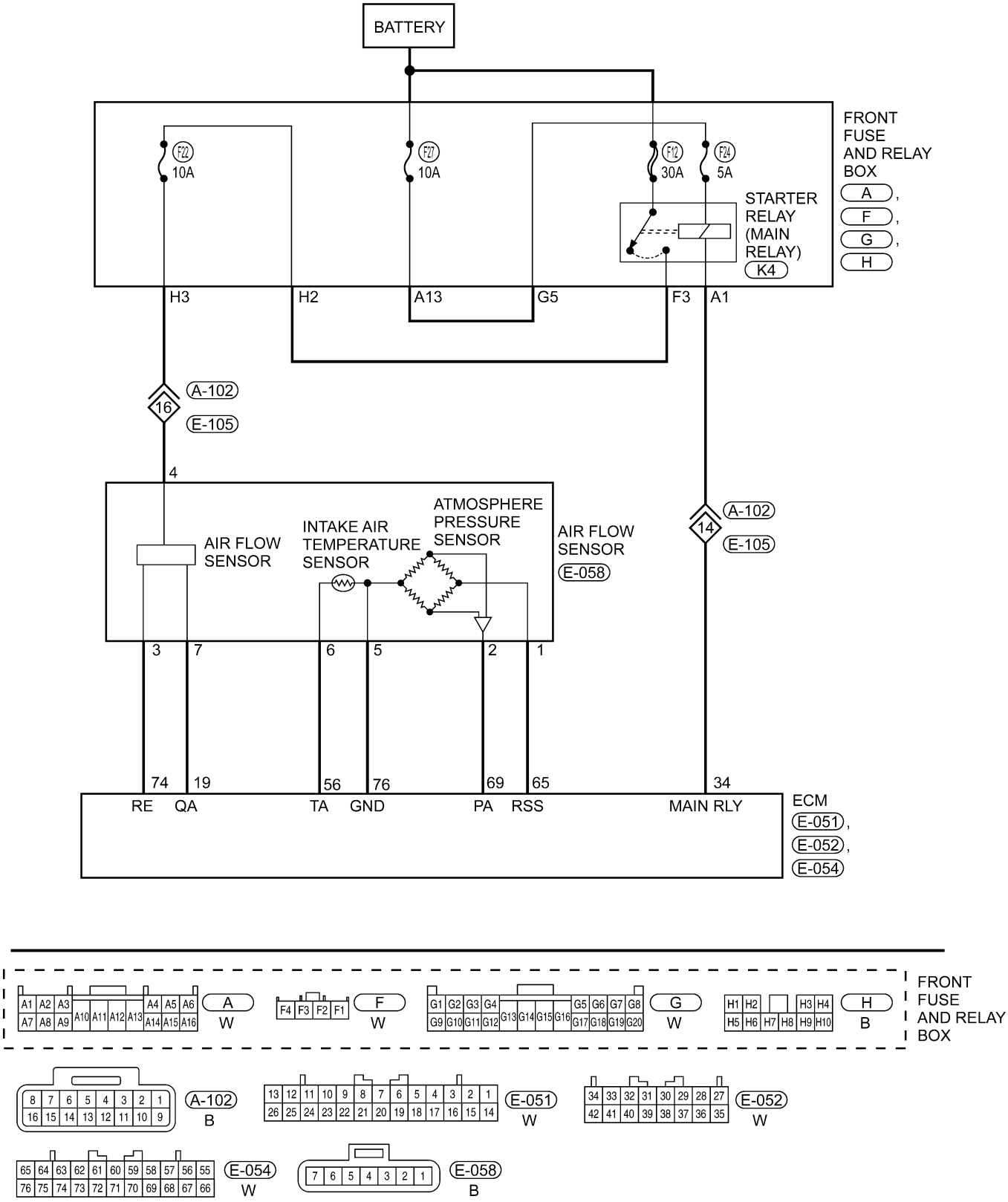

Downloaded from www.Manualslib.com manuals search engine

Check reference values between ECM terminals and ground under the following conditions:

ECM TERMINAL NO.	ITEM	CONDITION	DATA (DC VOLTAGE)
19	Air flow sensor	• Engine is running • Warm-up condition • Idle	0 - 1 V
		• Engine is running: 3,000 RPM	6 - 9 V
74	Air flow sensor	• Engine is running • Warm-up condition • Idle	2.2 - 3.2 V
		• Engine is running: 2,500 RPM	

On Board Diagnostic Logic

- Self-diagnosis detection logic.

DTC NO.	DTC DEFINITION	DTC DETECTION CONDITION	DTC SET CONDITION	POSSIBLE CAUSE
12	Air flow sensor	Engine speed is above 500 RPM	Sensor output frequency is below 3 HZ for 4 seconds.	• Air flow sensor • Harness or connectors • ECM

DTC Confirmation Procedure:

Before performing the following procedure, confirm that battery voltage is more than 12 V.

- Turn ignition switch off.
- Connect the X-431 scan tool to the Data Link Connector (DLC) - use the most current software available.
- Turn ignition switch on and record and erase DTC.
- Start engine and keep the engine speed above 500 RPM and select view DTC and data stream.
- If the DTC is detected, the DTC condition is current. Go to Diagnostic Procedure - Step 1.
- If the DTC is not detected, the DTC condition is intermittent (See Diagnostic Help and Intermittent DTC Troubleshooting in Section 03 Electronic Engine Controls for more information.

NOTE :
Before performing the following procedure, make sure that the ECM connection is in good condition.

NOTE :
While performing electrical diagnosis & testing, always refer to the electrical schematics for specific circuit and component information.

Diagnostic Procedure

1. CHECK GROUND CONNECTION

- Turn ignition switch off.
- Loosen and retighten ground screws on the body (See Ground Inspection in Section 03 Electronic Engine Controls).
- Inspect the ground connection E-208 (See Vehicle Wiring Harness Layout - Engine Room Harness (With Mitsubishi 2.4L Engine) in Section 16 Wiring).

Is the ground connections OK?

Yes >> Go to the next step.

No >> Repair or replace ground connection.

Downloaded from www.Manualslib.com manuals search engine

2. CHECK AIR FLOW SENSOR ELECTRICAL CONNECTOR

- Turn ignition switch off.
- Disconnect the air flow sensor electrical connector.
- Inspect the electrical connector for damage.

Is the electrical connector OK?

Yes >> Go to the next step.

No >> Repair or replace the electrical connector as necessary.

3. CHECK AIR FLOW SENSOR POWER SUPPLY CIRCUIT

- Turn ignition switch on.
- Check supply voltage between air flow sensor terminal 4 and ground in the air flow sensor electrical connector E-058.
- Battery voltage should exist.

Is the check result normal?

Yes >> Go to step 5.

No >> Go to the next step.

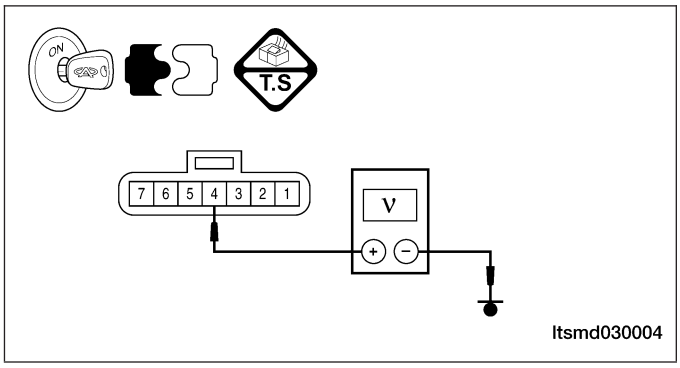

4. DETECT MALFUNCTIONING PART

- Check the following:
  - Harness connectors A-102, E-105
  - Front fuse and relay box H3
  - Fuse 22, Fuse 12
  - Harness open or short between air flow sensor and fuse

Is the check result normal?

Yes >> Go to the next step.

No >> Repair or replace malfunctioning parts.

5. CHECK MAF SENSOR REFERENCE VOLTAGE

- Check reference voltage between air flow sensor terminal 7 and ground in the air flow sensor electrical connector E-058.
- 4.8 - 5.2 V should exist.

Is the check result normal?

Yes >> Go to step 7.

No >> Go to the next step.

Downloaded from www.Manualslib.com manuals search engine

6. CHECK MAF SENSOR REFERENCE CIRCUIT FOR AN OPEN OR SHORT

- Turn ignition switch off.
- Disconnect ECM harness connector.
- Check harness continuity between following terminals.

AIR FLOW SENSOR TERMINAL	ECM TERMINAL	
3	74	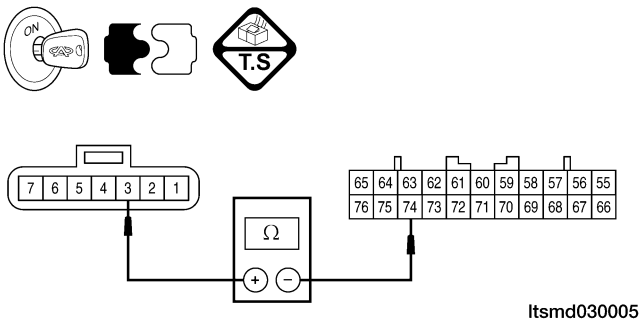

- Continuity should exist.
- Check harness for short to power or short to ground.

Is the check result normal?

Yes >> Go to the next step.

No >> Repair or replace the circuit for an open or short to power or short to ground in harness or connectors.

7. CHECK MAF SENSOR

- Connect air flow sensor connector.
- Connect ECM connector.
- With digital multimeter and the X-431, check sensor signal output data and data stream value.

CAUTION:

To new vehicle (less than 500 km mileage), the sensor output frequency is 10 % higher than standard value.

CHECK ITEM	CHECK CONTENT		NORMAL VALUE
Air flow sensor	• Engine coolant temperature: 80 - 95°C • Lamp and all other condition: OFF • Transaxle: Neutral	• Engine is running • Warm-up running • Idle	19 - 45 HZ
		• Engine is running: 2,500 RPM	72 - 112 HZ
		• Engine is accelerating	Frequency direct proportion with speed

Downloaded from www.Manualslib.com manuals search engine

- Check the sensor signal output data and data stream value.

TERMINAL NO.	ITEM	CONDITION	DATA (DC VOLTAGE)
19	Air flow sensor	• Engine is running • Warm-up running • Idle	0 - 1 V
		• Engine is running: 3,000 RPM	6 - 9 V
74	Air flow sensor	• Engine is running • Warm-up running • Idle	2.2 - 3.2 V
		• Engine is running: 2,500 RPM	

Is the check result normal?

Yes >> Go to step 9.

No >> Go to the next step.

8. CHECK MAF SENSOR REFERENCE CIRCUIT FOR AN OPEN OR SHORT

- Turn ignition switch off.
- Disconnect ECM harness connector.
- Check harness continuity between following terminals.

AIR FLOW SENSOR TERMINAL	ECM TERMINAL
7	19

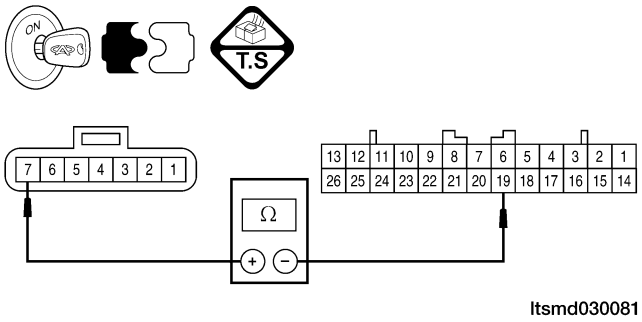

- Continuity should exist.
- Check harness for short to power or short to ground.

Is the check result normal?

Yes >> Go to the next step.

No >> Repair or replace the circuits for an open or short to power or short to ground in harness or connectors.

Downloaded from www.Manualslib.com manuals search engine

9. CHECK DTC

- With the X-431 scan tool, read ECM DTCs.
- Refer to ″DTC Confirmation Procedure″.

Is DTC 12 still present?

Yes >> Replace the ECM.

No >> The system is now operating properly.
Reassemble the vehicle and road test to verify the customers complaint is repaired.

Downloaded from www.Manualslib.com manuals search engine

13 - Air Temperature Sensor

EEC - 2.4L - MAF - 01

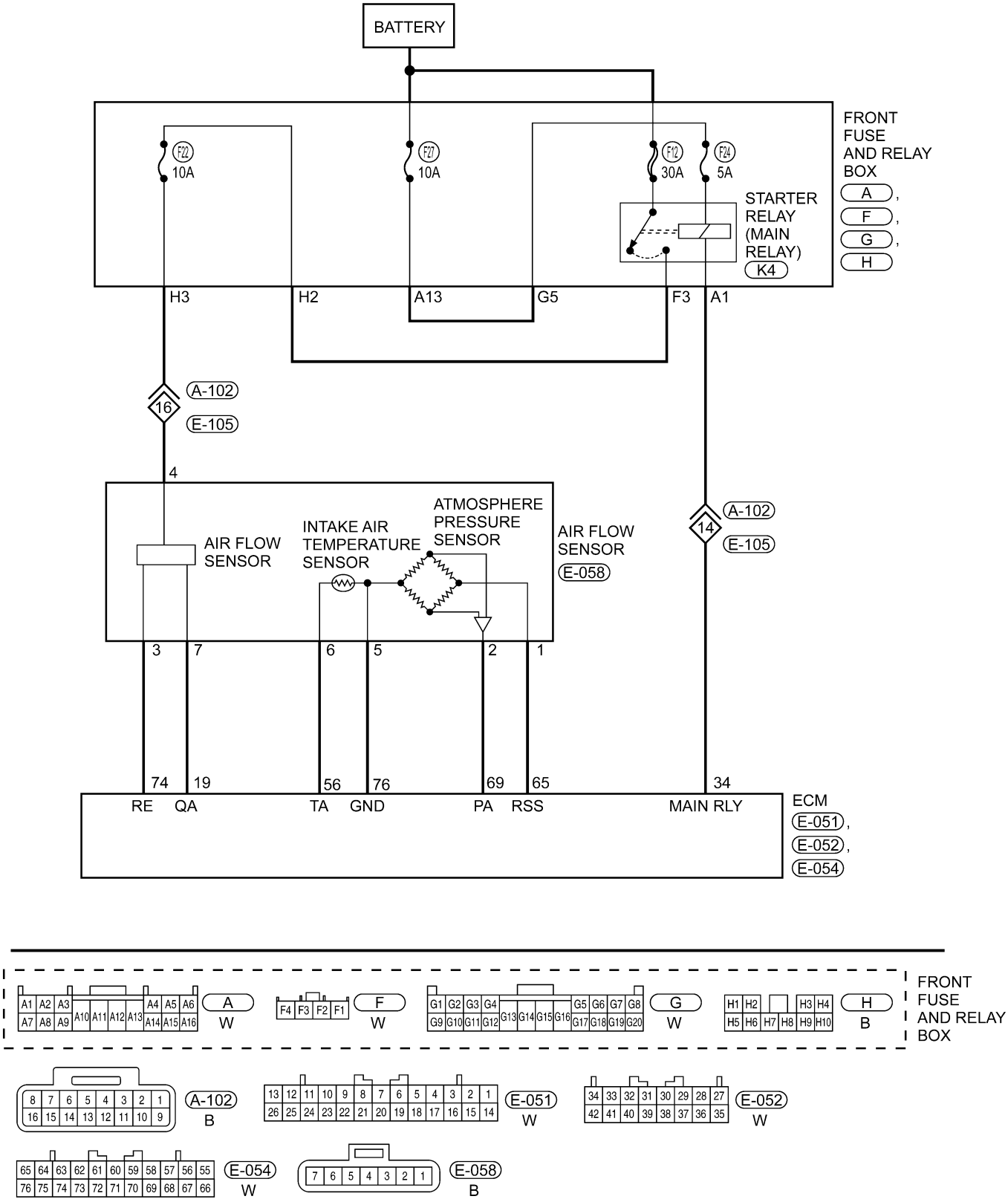

Downloaded from www.Manualslib.com manuals search engine

Check reference values between ECM terminals and ground under the following conditions:

ECM TERMINAL NO.	ITEM	CONDITION		DATA (DC VOLTAGE)
56	Intake Air Temperature (IAT) sensor	Ignition switch: ON	IAT: 0°C	3.2 - 3.8 V
			IAT: 20°C	2.3 - 2.9 V
			IAT: 40°C	1.5 - 2.1 V
			IAT: 80°C	0.4 - 1.0 V
76	Sensor (GND)	Ignition switch on		0 V

On Board Diagnostic Logic

- Self-diagnosis detection logic.

DTC NO.	DTC DEFINITION	DTC DETECTION CONDITION	DTC SET CONDITION	POSSIBLE CAUSE
13	Air temperature sensor	• Ignition switch ON position for 60 seconds • Engine: Running	• Signal output is over 4.6 V for 4 seconds continuously (amount to -45°C intake air temperature). • Signal output is below 0.2 V for 4 seconds continuously (amount to 125°C intake air temperature).	• Intake Air Temperature (IAT) sensor • Harness or connectors • ECM

DTC Confirmation Procedure:

Before performing the following procedure, confirm that battery voltage is more than 12 V.

- Turn ignition switch off.
- Connect the X-431 scan tool to the Data Link Connector (DLC) - use the most current software available.
- Turn ignition switch on.
- With the scan tool, record and erase stored DTCs in the ECM.
- Start engine and warm it to normal operating temperature, then select view DTC and data stream.
- If the DTC is detected, the DTC condition is current. Go to Diagnostic Procedure - Step 1.
- If the DTC is not detected, the DTC condition is intermittent (See Diagnostic Help and Intermittent DTC Troubleshooting in Section 03 Electronic Engine Controls for more information.

NOTE :
Before performing the following procedure, make sure that the ECM connection is in good condition.

NOTE :
While performing electrical diagnosis & testing, always refer to the electrical schematics for specific circuit and component information.

Downloaded from www.Manualslib.com manuals search engine

Diagnostic Procedure

1. CHECK GROUND CONNECTION

- Turn ignition switch off.
- Loosen and retighten ground screws on the body (See Ground Inspection in Section 03 Electronic Engine Controls).
- Inspect the ground connection E-208 (See Vehicle Wiring Harness Layout - Engine Room Harness (With Mitsubishi 2.4L Engine) in Section 16 Wiring).

Is the ground connections OK?

Yes >> Go to the next step.

No >> Repair or replace ground connection.

2. CHECK INTAKE AIR TEMPERATURE (IAT) SENSOR ELECTRICAL CONNECTOR

- Turn ignition switch off.
- Disconnect the IAT sensor (IAT sensor is built-into) (1) electrical connector.
- Inspect the electrical connector for damage.

Is the electrical connector OK?

Yes >> Go to the next step.

No >> Repair or replace the electrical connector as necessary.

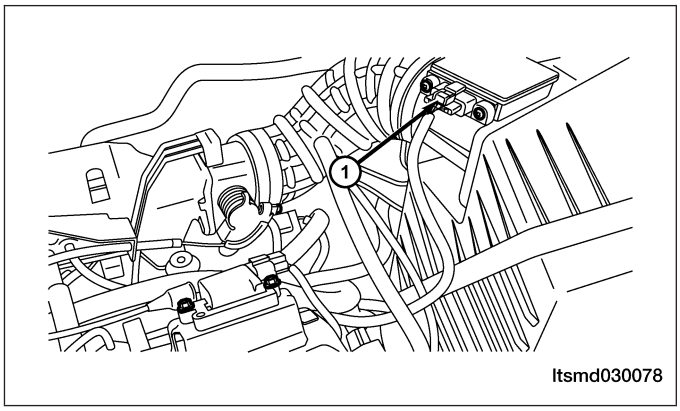

3. CHECK THE INTAKE AIR TEMPERATURE (IAT) SENSOR POWER SUPPLY CIRCUIT

- Turn ignition switch on.
- Check supply voltage between IAT sensor terminal 6 and ground in the IAT sensor electrical connector E-058.
- 4.5 - 4.9 V should exist.

Is the check result normal?

Yes >> Go to the next step.

No >> Repair the circuit for an open or short to power or short to ground in harness or connectors.
If the circuit is normal, go to the next step.

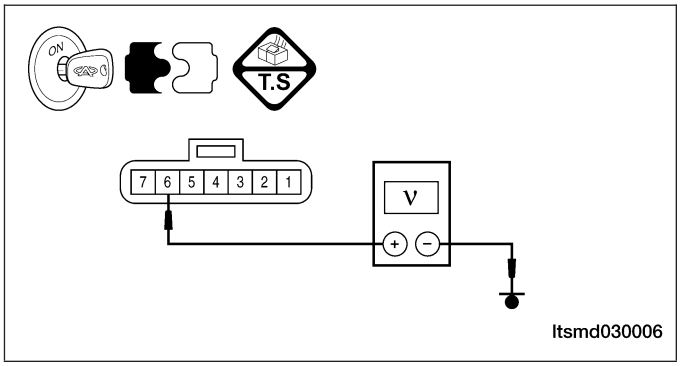

Downloaded from www.Manualslib.com manuals search engine

4. CHECK IAT SENSOR GROUND CIRCUIT FOR AN OPEN OR SHORT

- Turn ignition switch off.
- Disconnect ECM harness connector.
- Check harness continuity between following terminals.

A/T SENSOR TERMINAL	ECM TERMINAL	CONTINUITY
5	76	Yes

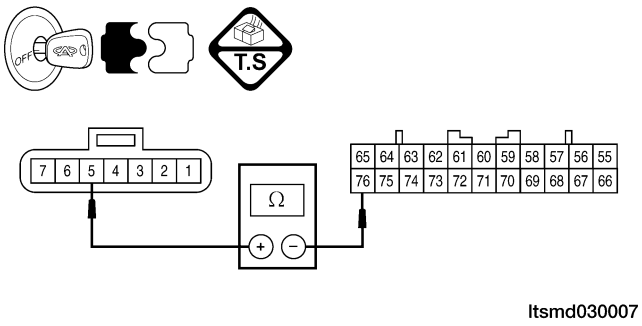

- Continuity should exist.
- Check harness for short to power and short to ground.

Is the check result normal?

Yes >> Go to the next step.

No >> Repair circuit for an open or short to power or short to ground in harness or connectors.

5. CHECK IAT SENSOR

- Check resistance between MAF sensor terminal 5 and 6 under the following conditions:

IAT°C	RESISTANCE KΩ
20°C	2.3 - 3.0
80°C	0.30 - 0.42

- Connect IAT sensor connector.
- Connect ECM connector.
- Turn ignition switch on.
- Check sensor signal output.

TERMINAL NO.	ITEM	CONDITION		DATA (DC VOLTAGE)
56	IAT sensor	Ignition switch: ON	IAT: 0°C	3.2 - 3.8 V
			IAT: 20°C	2.3 - 2.9 V
			IAT: 40°C	1.5 - 2.1 V
			IAT: 80°C	0.4 - 1.0 V
76	Sensor (GND)	Ignition switch: ON		0 V

Is the check result normal?

Yes >> Go to the next step.

No >> Replace IAT sensor.

Downloaded from www.Manualslib.com manuals search engine

6. CHECK DTC

- With the X-431 scan tool, read ECM DTCs.
- Refer to ″DTC Confirmation Procedure″.

Is DTC 13 still present?

Yes >> Replace the ECM.

No >> The system is now operating properly.
Reassemble the vehicle and road test to verify the customers complaint is repaired.

Downloaded from www.Manualslib.com manuals search engine

14 - Throttle Position Sensor

EEC - 2.4L - TPS - 01

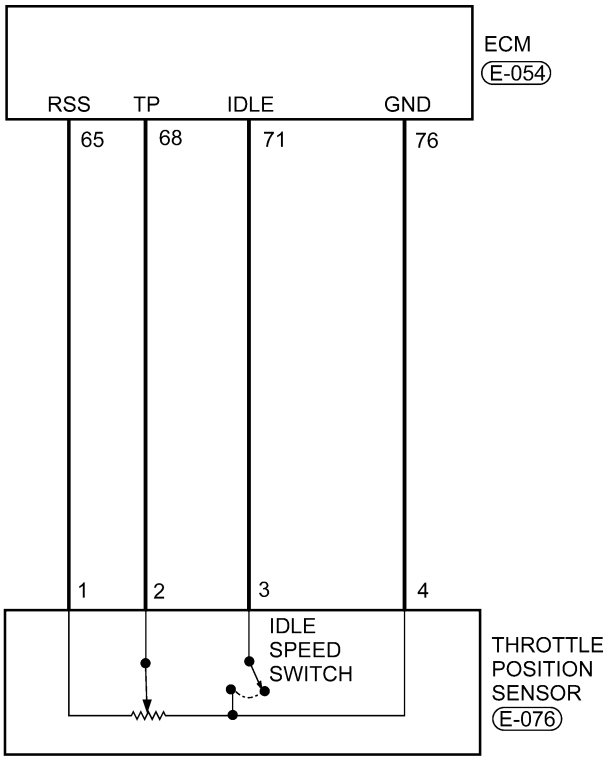

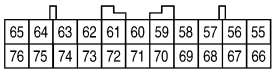

E-054
W

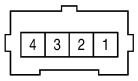

E-076
B

ltsmw030014t

Downloaded from www.Manualslib.com manuals search engine

Check reference values between ECM terminals and ground under the following conditions:

ECM TERMINAL NO.	ITEM	CONDITION		DATA (DC VOLTAGE)
65	Regulated sensor supply	Ignition switch: ON	-	Approximately 5 V
68	Throttle Position (TP) sensor		TP is in idle position	0.3 - 1.0 V
			TP is full opening	4.5 - 5.5 V
71	Idle position switch		Adjust TP to idle position	0 - 1 V
			TP is ajar	Above 4 V
76	Sensor (GND)		-	Approximately 0 V

On Board Diagnostic Logic

- Self-diagnosis detection logic.

DTC NO.	DTC DEFINITION	DTC DETECTION CONDITION	DTC SET CONDITION	POSSIBLE CAUSE
14	Throttle position sensor	Ignition switch on for 60 seconds or after engine start	• Idle position switch is in ON position and output is over 2 V for 4 seconds continuously. • Signal output is below 0.2 V for 4 seconds continuously.	• Throttle Position Sensor (TPS) or misalignment • Harness or connectors • Idle position switch ON position is not normal • Idle position switch signal circuit shorted • ECM

DTC Confirmation Procedure:

Before performing the following procedure, confirm that battery voltage is more than 12 V.

- Turn ignition switch off.
- Connect the X-431 scan tool to the Data Link Connector (DLC) - use the most current software available.
- Turn ignition switch on.
- With the scan tool, record and erase stored DTCs in the ECM.
- Start engine and warm it to normal operating temperature, then select view DTC and data stream.
- If the DTC is detected, the DTC condition is current. Go to Diagnostic Procedure - Step 1.
- If the DTC is not detected, the DTC condition is intermittent (See Diagnostic Help and Intermittent DTC Troubleshooting in Section 03 Electronic Engine Controls for more information.

NOTE :
Before performing the following procedure, make sure that the ECM connection is in good condition.

NOTE :
While performing electrical diagnosis & testing, always refer to the electrical schematics for specific circuit and component information.

Downloaded from www.Manualslib.com manuals search engine

Diagnostic Procedure

1. CHECK GROUND CONNECTION

- Turn ignition switch off.
- Loosen and retighten ground screws on the body (See Ground Inspection in Section 03 Electronic Engine Controls).
- Inspect the ground connection E-208 (See Vehicle Wiring Harness Layout - Engine Room Harness (With Mitsubishi 2.4L Engine) in Section 16 Wiring).

Is the ground connections OK?

Yes >> Go to the next step.

No >> Repair or replace ground connection.

2. CHECK THROTTLE POSITION SENSOR (TPS) ELECTRICAL CONNECTOR

- Turn ignition switch off.
- Disconnect the TPS (1) electrical connector.
- Inspect the electrical connector for damage.

Is the electrical connector OK?

Yes >> Go to the next step.

No >> Repair or replace the electrical connector as necessary.

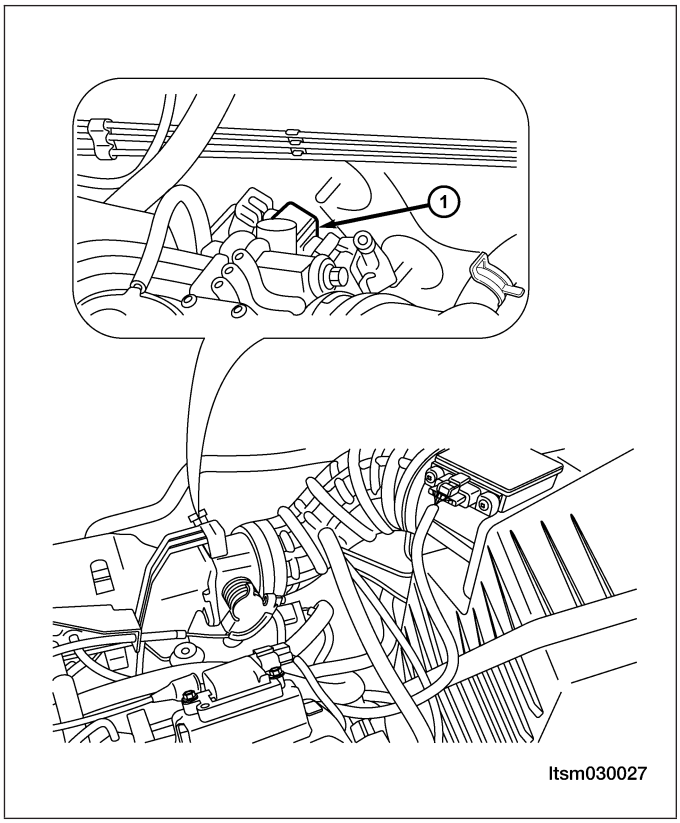

Downloaded from www.Manualslib.com manuals search engine

3. CHECK THE THROTTLE POSITION SENSOR (TPS) POWER SUPPLY CIRCUIT

- Turn ignition switch on.
- Check supply voltage between TPS terminal 1 and ground in the TPS electrical connector E-076.
- 4.5 - 5.5 V should exist.

Is the check result normal?

Yes >> Go to the next step.

No >> Repair the circuit for an open or short to power supply or ground in harness or connectors.
If the circuit is normal, go to the next step.

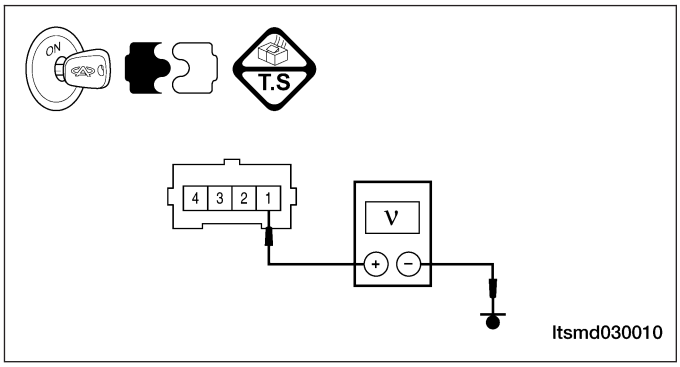

4. CHECK THE TPS SIGNAL CIRCUIT FOR AN OPEN OR SHORT

- Turn ignition switch off.
- Disconnect ECM harness connector.
- Check harness continuity between following terminals.

TPS TERMINAL	ECM TERMINAL
2	68

- Continuity should exist.
- Also check harness for short to power and short to ground.

Is the check result normal?

Yes >> Go to the next step.

No >> Repair the circuit for an open or short to power or short to ground in harness or connectors.

5. CHECK TPS IDLE SWITCH CIRCUIT FOR AN OPEN OR SHORT

- Check harness continuity between following terminals.

TPS TERMINAL	ECM TERMINAL
3	71

- Continuity should exist.
- Check harness for short to power or short to ground.

Is the check result normal?

Yes >> Go to the next step.

No >> Repair the circuit for an open or short to power or short to ground in harness or connectors.

Downloaded from www.Manualslib.com manuals search engine

6. CHECK TPS GROUND CIRCUIT FOR AN OPEN OR SHORT

- Check harness continuity between following terminals.

TPS TERMINAL	ECM TERMINAL
4	76

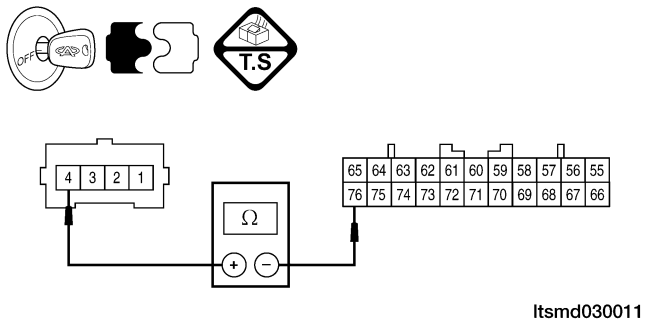

- Continuity should exist.
- Check harness for short to power.

Is the check result normal?

Yes >> Go to the next step.

No >> Repair the circuit for an open or short to power in harness or connectors.

7. CHECK THE TPS RESISTANCE

- Check the resistance between TPS terminal 1 and terminal 3.
- 28 - 33 Ω (20°C) should exist.
- Also check the resistance between TPS terminal 2 and terminal 4 while turn the throttle.
- The resistance should linear change.

Is the check result normal?

Yes >> Go to the next step.

No >> Replace the TPS.

Downloaded from www.Manualslib.com manuals search engine

8. CHECK THE TPS SIGNAL

- Turn ignition switch off.
- Connect ECM connector.
- Connect TPS connector.
- Turn ignition switch on.
- Check voltage between TPS terminal 2 and terminal 3 and ground under the following conditions:

TERMINAL NO.	ITEM	CONDITION		DATA (DC VOLTAGE)
65	Regulated sensor supply	Ignition switch: ON	-	Approximately 5 V
68	Throttle Position (TP) sensor		TP is in idle position	0.3 - 1.0 V
			TP is fully opened	4.5 - 5.5 V
			TP is open step by step	Value is directly proportional to TP opening angle
71	Idle position switch		Adjust TP to idle position	0 - 1 V
			TP is ajar	Above 4 V
76	Sensor (GND)		-	Approximately 0 V

Is the check result normal?

Yes >> Go to the next step.

No >> Replace the TPS.

9. CHECK DTC

- With the X-431 scan tool, read ECM DTCs.
- Refer to ″DTC Confirmation Procedure″.

Is DTC 14 still present?

Yes >> Replace the ECM.

No >> The system is now operating properly.
Reassemble the vehicle and road test to verify the customers complaint is repaired.

Downloaded from www.Manualslib.com manuals search engine

21 - Coolant Temperature Sensor

EEC - 2.4L - ECT - 01

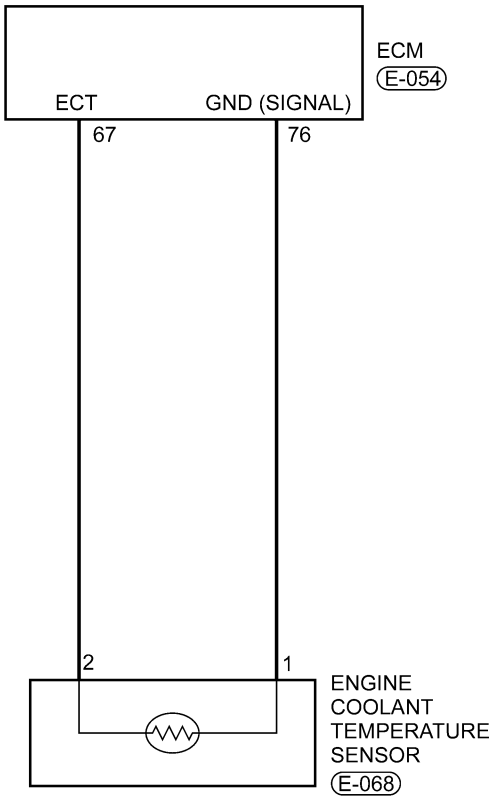

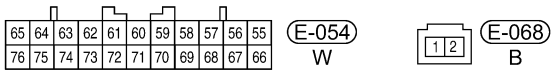

ltsmw030005t

Downloaded from www.Manualslib.com manuals search engine

Check reference values between ECM terminals and ground under the following conditions:

ECM TERMINAL NO.	ITEM	CONDITION		DATA (DC VOLTAGE)
67	Engine Coolant Temperature (ECT) sensor	Ignition switch: ON	ECT: 0°C	3.2 - 3.8 V
			ECT: 20°C	2.3 - 2.9 V
			ECT: 40°C	1.3 - 1.9 V
			ECT: 80°C	0.3 - 0.9 V
76	Sensor (GND)		-	Approximately 0 V

On Board Diagnostic Logic

- Self-diagnosis detection logic.

DTC NO.	DTC DEFINITION	DTC DETECTION CONDITION	DTC SET CONDITION	POSSIBLE CAUSE
21	Coolant temperature sensor	• Ignition switch: ON position for 60 seconds • Engine: Running	• Signal output is above 4.6 V for 4 seconds continuously (amount to -45°C engine coolant temperature). • Signal output is below 0.1 V for 4 seconds continuously (amount to 145°C engine coolant temperature).	• Engine Coolant Temperature (ECT) sensor • Harness or connectors • ECM
		• Ignition switch: ON • Engine speed is above 500 RPM	• Signal output raise from below 1.6 V to above 1.6 V (amount to 40°C engine coolant temperature). • Signal output is above 1.6 V for 5 minutes.	

DTC Confirmation Procedure:

Before performing the following procedure, confirm that battery voltage is more than 12 V.

- Turn ignition switch off.
- Connect the X-431 scan tool to the Data Link Connector (DLC) - use the most current software available.
- Turn ignition switch on.
- With the scan tool, record and erase stored DTCs in the ECM.
- Start engine and warm it to normal operating temperature, then select view DTC and data stream.
- If the DTC is detected, the DTC condition is current. Go to Diagnostic Procedure - Step 1.
- If the DTC is not detected, the DTC condition is intermittent (See Diagnostic Help and Intermittent DTC Troubleshooting in Section 03 Electronic Engine Controls for more information.

NOTE :
Before performing the following procedure, make sure that the ECM connection is in good condition.

NOTE :
While performing electrical diagnosis & testing, always refer to the electrical schematics for specific circuit and component information.

Downloaded from www.Manualslib.com manuals search engine

Diagnostic Procedure

1. CHECK GROUND CONNECTION

- Turn ignition switch off.
- Loosen and retighten ground screws on the body (See Ground Inspection in Section 03 Electronic Engine Controls).
- Inspect the ground connection E-208 (See Vehicle Wiring Harness Layout - Engine Room Harness (With Mitsubishi 2.4L Engine) in Section 16 Wiring).

Is the ground connections OK?

Yes >> Go to the next step.

No >> Repair or replace ground connection.

2. CHECK ENGINE COOLANT TEMPERATURE (ECT) SENSOR ELECTRICAL CONNECTOR

- Disconnect the ECT (1) electrical connector.
- Inspect the electrical connector for damage.

Is the electrical connector OK?

Yes >> Go to the next step.

No >> Repair or replace the electrical connector as necessary.

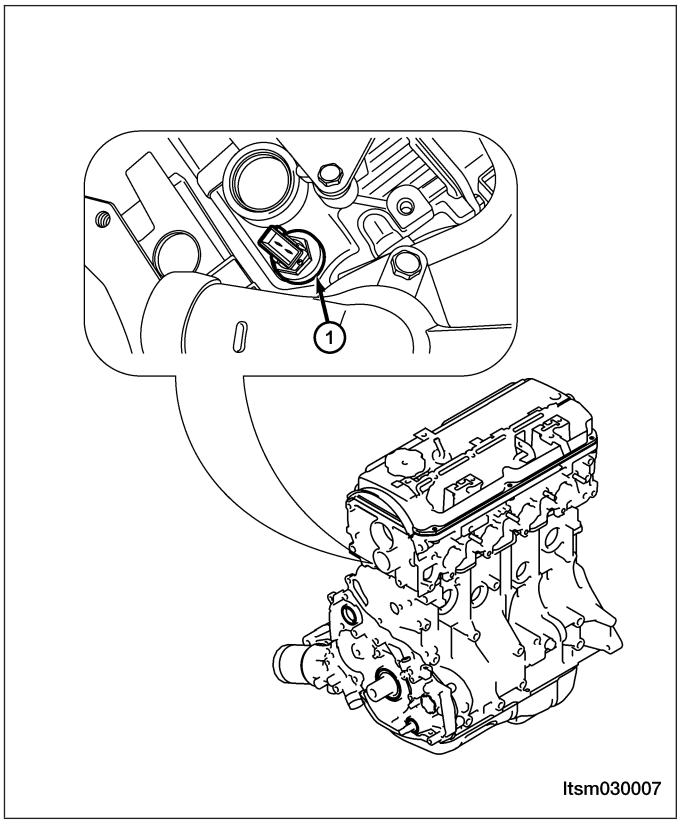

Downloaded from www.Manualslib.com manuals search engine

3. CHECK ENGINE COOLANT TEMPERATURE (ECT) SENSOR SIGNAL CIRCUIT FOR AN OPEN OR SHORT

- Turn ignition switch on.
- Check reference voltage between sensor terminal 2 and ground in the sensor electrical connector E-068.
- 4.5 - 4.9 V should exist.

Is the check result normal?

Yes >> Go to step 5.

No >> Go to the next step.

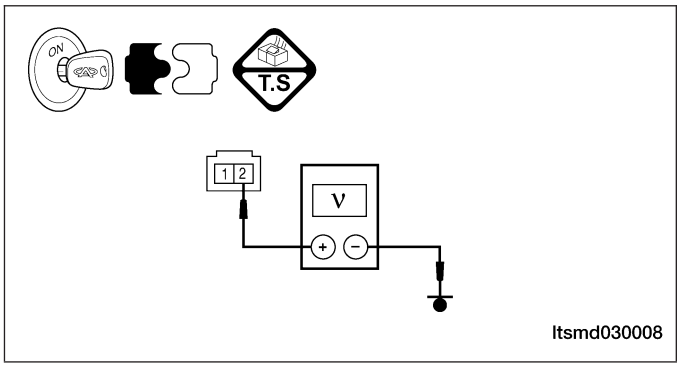

4. DETECT MALFUNCTIONING PART

- Turn ignition switch off.
- Disconnect ECM connector.
- Check harness for an open or short between ECT connector terminal 2 and ECM connector E-054, terminal 67.

Is the check result normal?

Yes >> Replace the ECM.

No >> Repair circuit for an open or short in harness or connectors.

5. CHECK ECT SENSOR GROUND CIRCUIT FOR AN OPEN AND SHORT

- Check harness continuity between following terminals.

ECT SENSOR TERMINAL	ECM TERMINAL
1	76

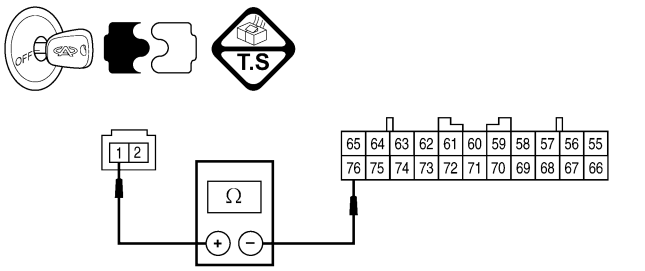

- Continuity should exist.
- Also check harness for short to power and short to ground.

Is the check result normal?

Yes >> Go to the next step.

No >> Repair circuit for an open or short to power or short to ground in harness or connectors.

Downloaded from www.Manualslib.com manuals search engine

6. CHECK THE ECT SENSOR

- Check resistance between ECT sensor terminal 1 and 2.

ECT°C	RESISTANCE KΩ
0°C	5.1 - 6.5
20°C	2.1 - 2.7
40°C	0.9 - 1.3
80°C	0.26 - 0.36

- Connect ECT sensor connector.
- Connect ECM connector.
- Turn ignition switch on.
- Check sensor signal output.

TERMINAL NO.	ITEM	CONDITION		DATA (DC VOLTAGE)
67	ECT sensor	Ignition switch: ON	ECT: 0°C	3.2 - 3.8 V
			ECT: 20°C	2.3 - 2.9 V
			ECT: 40°C	1.3 - 1.9 V
			ECT: 80°C	0.3 - 0.9 V
76	Sensor (GND)		-	Approximately 0 V

Is the check result normal?

Yes >> Go to the next step.

No >> Replace ECT sensor.

7. CHECK DTC

- With the X-431 scan tool, read ECM DTCs.
- Refer to ″DTC Confirmation Procedure″.

Is DTC 21 still present?

Yes >> Replace the ECM.

No >> The system is now operating properly.
Reassemble the vehicle and road test to verify the customers complaint is repaired.

Downloaded from www.Manualslib.com manuals search engine

22 - Crankshaft Position Sensor

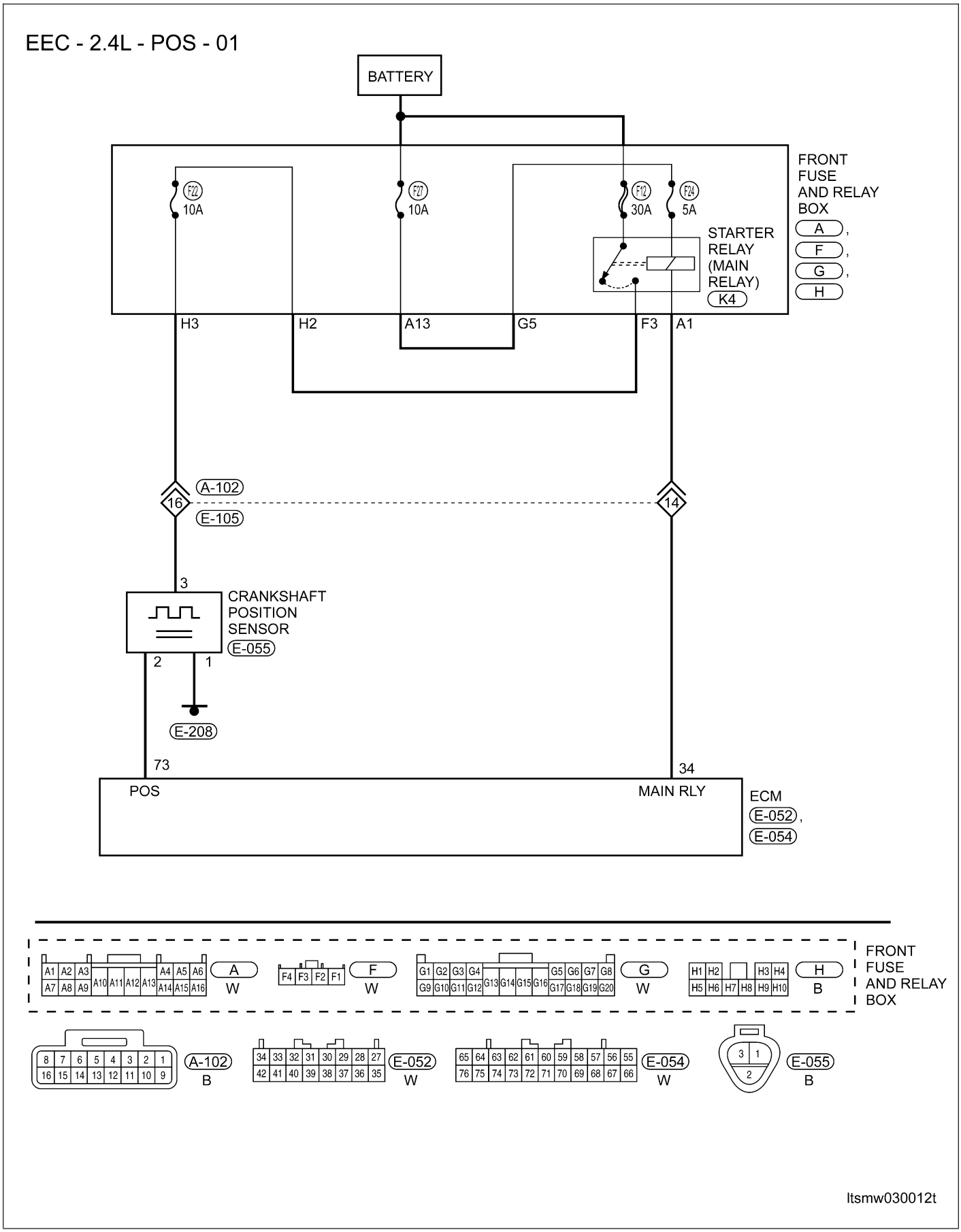

Downloaded from www.Manualslib.com manuals search engine

Check reference values between ECM terminals and ground under the following conditions:

ECM TERMINAL NO.	ITEM	CONDITION	DATA (DC Voltage)
73	Crankshaft Position (CKP) sensor	Ignition switch: ON Engine: Not cranking	4.8 - 5.2 V
		Engine: Cranking	0.4 - 4.0 V
		Engine: Idle	1.5 - 2.5 V

On Board Diagnostic Logic

- Self-diagnosis detection logic.

DTC NO.	DTC DEFINITION	DTC DETECTION CONDITION	DTC SET CONDITION	POSSIBLE CAUSE
22	CKP sensor	Crank engine	Signal output is no variance for 4 seconds continuously (no pulse signal).	• CKP sensor • Harness or connectors • Signal plate gear tooth • ECM

DTC Confirmation Procedure:

Before performing the following procedure, confirm that battery voltage is more than 12 V.

- Turn ignition switch off.
- Connect the X-431 scan tool to the Data Link Connector (DLC) - use the most current software available.
- Turn ignition switch on.
- With the scan tool, record and erase stored DTCs in the ECM.
- Start engine and warm it to normal operating temperature, then select view DTC and data stream.
- If the DTC is detected, the DTC condition is current. Go to Diagnostic Procedure - Step 1.
- If the DTC is not detected, the DTC condition is intermittent (See Diagnostic Help and Intermittent DTC Troubleshooting in Section 03 Electronic Engine Controls for more information.

NOTE :
Before performing the following procedure, make sure that the ECM connection is in good condition.

NOTE :
While performing electrical diagnosis & testing, always refer to the electrical schematics for specific circuit and component information.

Diagnostic Procedure

1. CHECK GROUND CONNECTION

- Turn ignition switch off.
- Loosen and retighten ground screws on the body (See Ground Inspection in Section 03 Electronic Engine Controls).
- Inspect the ground connection E-208 (See Vehicle Wiring Harness Layout - Engine Room Harness (With Mitsubishi 2.4L Engine) in Section 16 Wiring).

Is the ground connections OK?

Yes >> Go to the next step.

No >> Repair or replace ground connection.

Downloaded from www.Manualslib.com manuals search engine

2. CHECK CRANKSHAFT POSITION (CKP) SENSOR ELECTRICAL CONNECTOR

- Disconnect the CKP electrical connector (1).
- Inspect the electrical connector for damage.

Is the electrical connector OK?

Yes >> Go to the next step.

No >> Repair or replace the electrical connector as necessary.

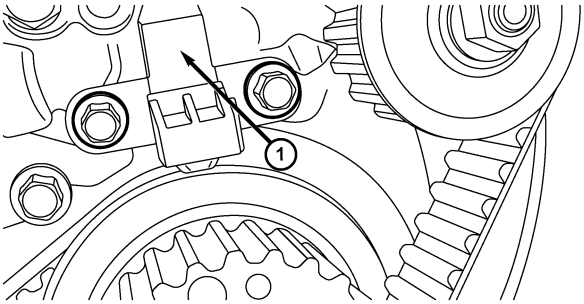

ltsmd030079

3. CHECK CRANKSHAFT POSITION (CKP) SENSOR POWER SUPPLY CIRCUIT FOR AN OPEN OR SHORT

- Turn ignition switch on.
- Check supply voltage between CKP sensor terminal 3 and ground in the CKP sensor electrical connector E-055.
- Battery voltage should exist.

Is the check result normal?

Yes >> Go to step 5.

No >> Go to the next step.

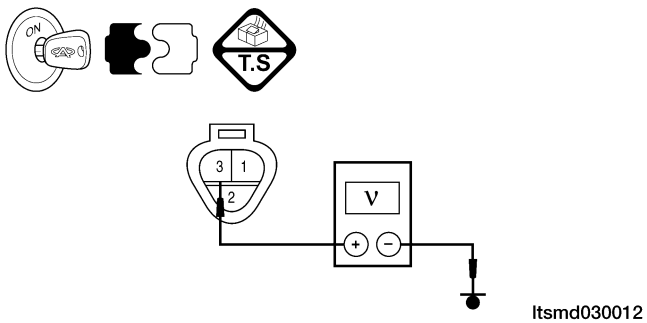

ltsmd030012

4. DETECT MALFUNCTIONING PART

- Check the following:
  - Fuse 22, Fuse 12
  - Front fuse and relay box H3
  - Harness connectors A-102, E-105
  - Harness open or short between CKP sensor and fuse

Is the check result normal?

Yes >> Go to the next step.

No >> Repair or replace malfunctioning parts.

Downloaded from www.Manualslib.com manuals search engine

5. CHECK CKP SENSOR GROUND CIRCUIT FOR OPEN OR SHORT TO POWER

- Turn ignition switch off.
- Check harness continuity between following terminals.

CKP SENSOR TERMINAL	TERMINAL	CONTINUITY
1	Ground	Yes

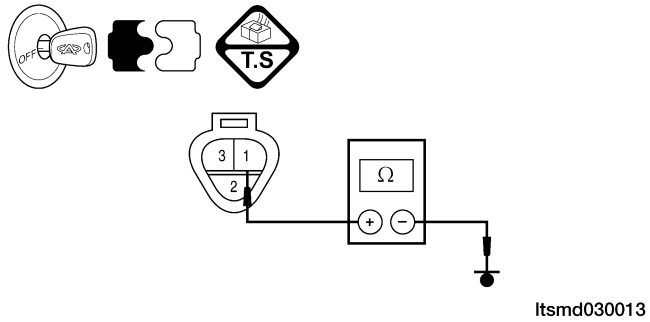

- Continuity should exist.
- Also check harness for short to power.

Is the check result normal?

Yes >> Go to step 7.

No >> Go to the next step.

6. DETECT MALFUNCTIONING PART

- Check harness for an open or short between CKP sensor and ground.

Is the check result normal?

Yes >> Go to the next step.

No >> Repair or replace harness or connectors.

7. CHECK CKP SENSOR REFERENCE VOLTAGE

- Turn ignition switch on.
- Check voltage between CKP sensor terminal 2 and ground.
- 4.8 - 5.2 V should exist.

Is the check result normal?

Yes >> Go to step 9.

No >> Go to the next step.

Downloaded from www.Manualslib.com manuals search engine

8. CHECK CKP SENSOR INPUT SIGNAL CIRCUIT FOR AN OPEN OR SHORT

- Turn ignition switch off.
- Disconnect ECM connector.
- Check harness continuity between ECM terminal 73 and CKP sensor terminal 2.
- Continuity should exist.
- Also check harness for short to power and short to ground.

Is the check result normal?

Yes >> Replace the ECM.

No >> Repair circuit for an open or short circuit in harness or connectors.

9. CHECK CKP SENSOR SIGNAL

- Turn ignition switch off.
- Connect ECM connector.
- Connect CKP sensor connector.
- Check sensor signal output.

TERMINAL NO.	ITEM	CONDITION	DATA (DC VOLTAGE)
73	Crankshaft Position (CKP) sensor	• Ignition switch: ON • Engine: Not cranking	4.8 - 5.2 V
		• Engine: Cranking	0.4 - 4.0 V
		• Engine: Idle	1.5 - 2.5 V

Is the check result normal?

Yes >> Go to step 12.

No >> Go to the next step.

10. CHECK CKP SENSOR

- Check resistance as table shown:
  - Remove the sensor.
  - Visually check the sensor for chipping.
  - Continuity should exist.

TERMINAL NO.	RESISTANCE Ω (25°C)
1 & 2	Except 0 or ∞
1 & 3	
2 & 3	

Is the check result normal?

Yes >> Replace the CKP sensor with a known good CKP sensor.
Monitor the CKP sensor signal on the KES-200 screen.
- If the CKP sensor signals were normal, the system is OK.
- If the CKP sensor signals were still irregular or missing, go to step 11.

No >> Replace CKP sensor.

Downloaded from www.Manualslib.com manuals search engine

11. CHECK GEAR TOOTH

- Visually check for chipping signal plate gear tooth.

Is the check result normal?

Yes >> Go to the next step.

No >> Replace the signal plate.

12. CHECK DTC

- With the X-431 scan tool, read ECM DTCs.
- Refer to ″DTC Confirmation Procedure″.

Is the check result normal?

Yes >> The system is now operating properly.
Reassemble the vehicle and road test to verify the customers complaint is repaired.

No >> Replace the ECM.

Downloaded from www.Manualslib.com manuals search engine

23 - Camshaft Position Sensor

EEC - 2.4L - PHASE - 01

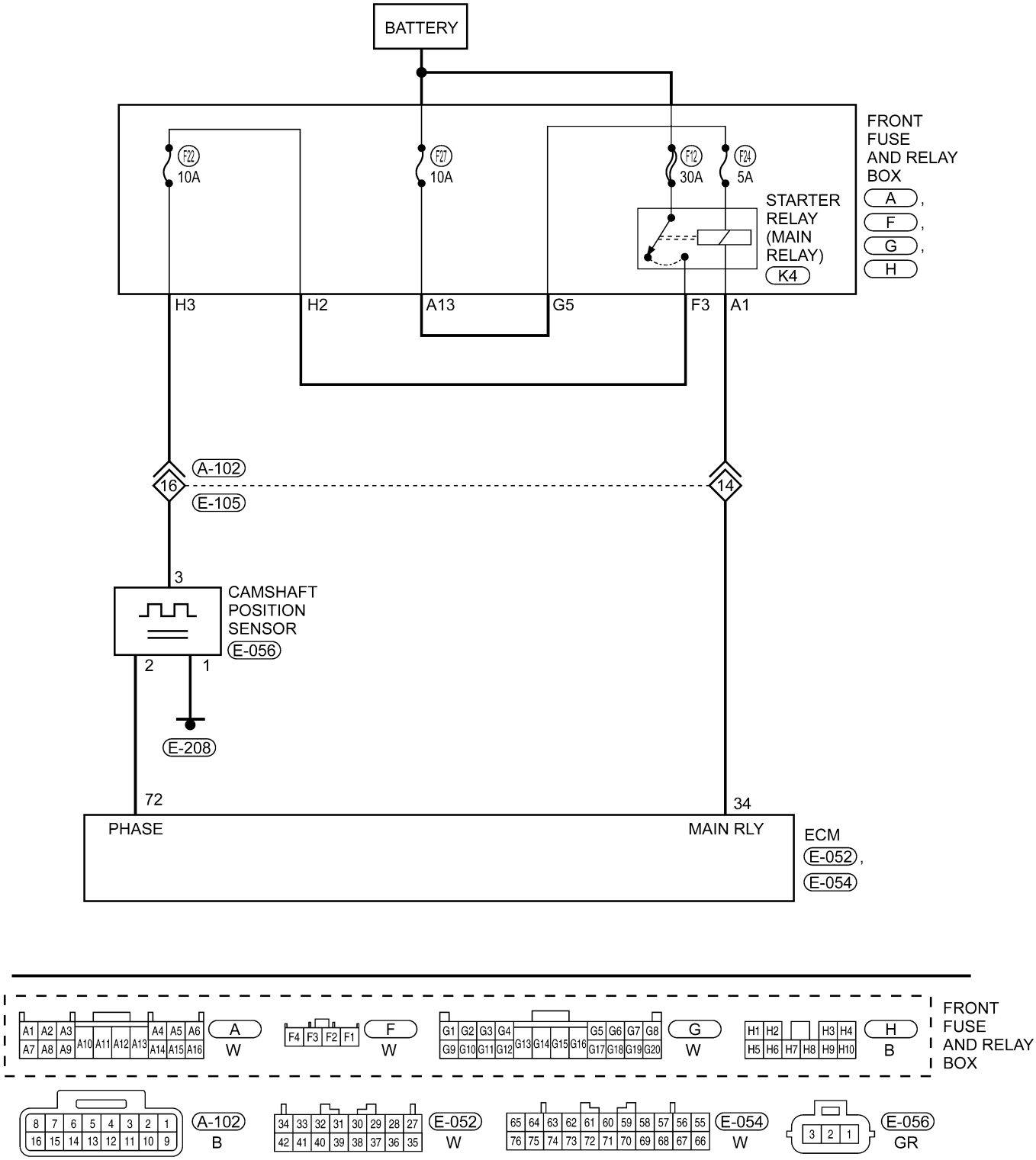

Downloaded from www.Manualslib.com manuals search engine

Check reference values between ECM terminals and ground under the following conditions:

ECM TERMINAL NO.	ITEM	CONDITION	DATA (DC VOLTAGE)
72	Camshaft Position (CMP) sensor	• Ignition switch: ON • Engine: Not cranking	4.8 - 5.2 V
		• Engine: Cranking	0.4 - 3.0 V
		• Engine: Idle	0.5 - 2.0 V

On Board Diagnostic Logic

- Self-diagnosis detection logic.

DTC NO.	DTC DEFINITION	DTC DETECTION CONDITION	DTC SET CONDITION	POSSIBLE CAUSE
23	CMP sensor	Crank engine	Signal output is no variance for 4 seconds continuously (no pulse signal).	• CMP sensor • Harness or connectors • ECM

DTC Confirmation Procedure:

Before performing the following procedure, confirm that battery voltage is more than 12 V.
- Turn ignition switch off.
- Connect the X-431 scan tool to the Data Link Connector (DLC) - use the most current software available.
- Turn ignition switch on.
- With the scan tool, record and erase stored DTCs in the ECM.
- Start engine and warm it to normal operating temperature, then select view DTC and data stream.
- If the DTC is detected, the DTC condition is current. Go to Diagnostic Procedure - Step 1.
- If the DTC is not detected, the DTC condition is intermittent (See Diagnostic Help and Intermittent DTC Troubleshooting in Section 03 Electronic Engine Controls for more information.

NOTE :
While performing electrical diagnosis & testing, always refer to the electrical schematics for specific circuit and component information.

Diagnostic Procedure

1. CHECK GROUND CONNECTION

- Turn ignition switch off.
- Loosen and retighten ground screws on the body (See Ground Inspection in Section 03 Electronic Engine Controls).
- Inspect the ground connection E-208 (See Vehicle Wiring Harness Layout - Engine Room Harness (With Mitsubishi 2.4L Engine) in Section 16 Wiring).

Is the ground connections OK?

Yes >> Go to the next step.

No >> Repair or replace ground connection.

Downloaded from www.Manualslib.com manuals search engine

2. CHECK CAMSHAFT POSITION (CMP) SENSOR ELECTRICAL CONNECTOR

- Disconnect the CMP electrical connector (1).
- Inspect the electrical connector for damage.

Is the electrical connector OK?

Yes >> Go to the next step.

No >> Repair or replace the electrical connector as necessary.

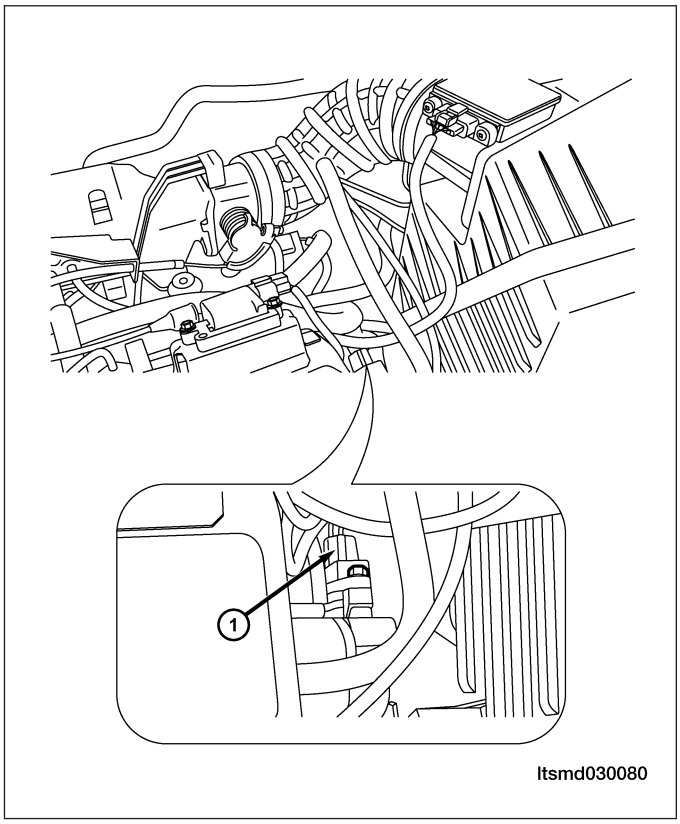

3. CHECK CAMSHAFT POSITION (CMP) SENSOR POWER SUPPLY CIRCUIT FOR AN OPEN OR SHORT

- Turn ignition switch on.
- Check supply voltage between CMP sensor connector E-056, terminal 3 and ground in the sensor electrical connector E-056.
- Battery voltage should exist.

Is the check result normal?

Yes >> Go to step 5.

No >> Go to the next step.

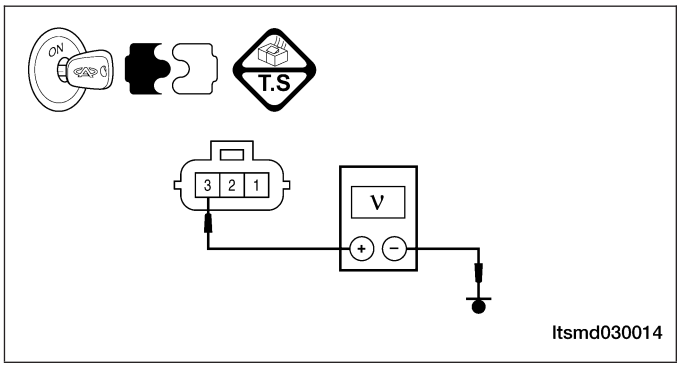

Downloaded from www.Manualslib.com manuals search engine

4. DETECT MALFUNCTIONING PART

- Check the following:
  - Fuse 22, Fuse 12
  - Front fuse and relay box H3
  - Harness connectors A-102, E-105
  - Harness open or short between CMP sensor and fuse

Is the check result normal?

Yes >> Go to the next step.

No >> Repair or replace malfunctioning parts.

5. CHECK THE CMP SENSOR GROUND CIRCUIT FOR AN OPEN

- Turn ignition switch off.
- Check harness continuity between following terminals.

CKP SENSOR TERMINAL	TERMINAL	CONTINUITY
1	Ground	Yes

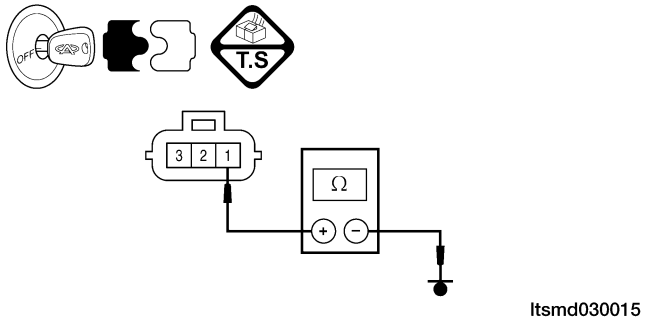

- Continuity should exist.

Is the check result normal?

Yes >> Go to step 7.

No >> Go to the next step.

6. DETECT MALFUNCTIONING PART

- Check harness for open or short between CMP sensor and ground.

Is the check result normal?

Yes >> Go to the next step.

No >> Repair or replace the circuit for an open or short in harness or connectors.

Downloaded from www.Manualslib.com manuals search engine

7. CHECK CMP SENSOR INPUT SIGNAL CIRCUIT FOR AN OPEN OR SHORT

- Turn ignition switch on.
- Check voltage between CMP sensor terminal 2 and ground.
- 4.8 - 5.2 V should exist.

Is the check result normal?

Yes >> Go to the next step.

No >> Repair or replace harness for open or short to power or short to ground between CMP sensor connector terminal 2 and ECM connector E-054, terminal 72.
If the harness is normal, go to the next step.

8. CHECK CMP SENSOR SIGNAL

- Connect ECM connector.
- Connect CMP sensor connector.
- Check signal voltage between CMP sensor terminal 2 and ground.

TERMINAL NO.	ITEM	CONDITION	DATA (DC VOLTAGE)
72	Camshaft Position (CMP) sensor	• Ignition switch: ON • Engine: Not cranking	4.8 - 5.2 V
		• Engine: Cranking	0.4 - 3.0 V
		• Engine: Idle	0.5 - 2.0 V

Is the check result normal?

Yes >> Go to step 11.

No >> Go to the next step.

9. CHECK CMP SENSOR

- Check resistance as table shown.
  - Remove the sensor.
  - Visually check the sensor for chipping.
  - Continuity should exist.

TERMINAL NO.	RESISTANCE Ω (25°C)
1 & 2	Except 0 or ∞
1 & 3	
2 & 3	

Is the check result normal?

Yes >> Replace the CMP sensor with a known good CMP sensor.
Monitor the CMP sensor signal on the KES-200 screen.
- If the CMP sensor signals were normal, the system is OK.
- If the CMP sensor signals were still irregular or missing, go to step 10.

No >> Replace the CMP sensor.

Downloaded from www.Manualslib.com manuals search engine

10. CHECK CAMSHAFT

- Check the following:
  - There should be no accumulation of debris on the signal plate of camshaft rear end.
  - There should be no chip on the signal plate of camshaft rear end.

Is the check result normal?

Yes >> Go to the next step.

No >> Remove debris and clean the signal plate of camshaft rear end or replace camshaft.

11. CHECK DTC

- With the X-431 scan tool, read ECM DTCs.
- Refer to ″DTC Confirmation Procedure″.

Is DTC 23 still present?

Yes >> Replace the ECM.

No >> The system is now operating properly.
Reassemble the vehicle and road test to verify the customers complaint is repaired.

Downloaded from www.Manualslib.com manuals search engine

25 - Atmosphere Pressure Sensor

EEC - 2.4L - MAF - 01

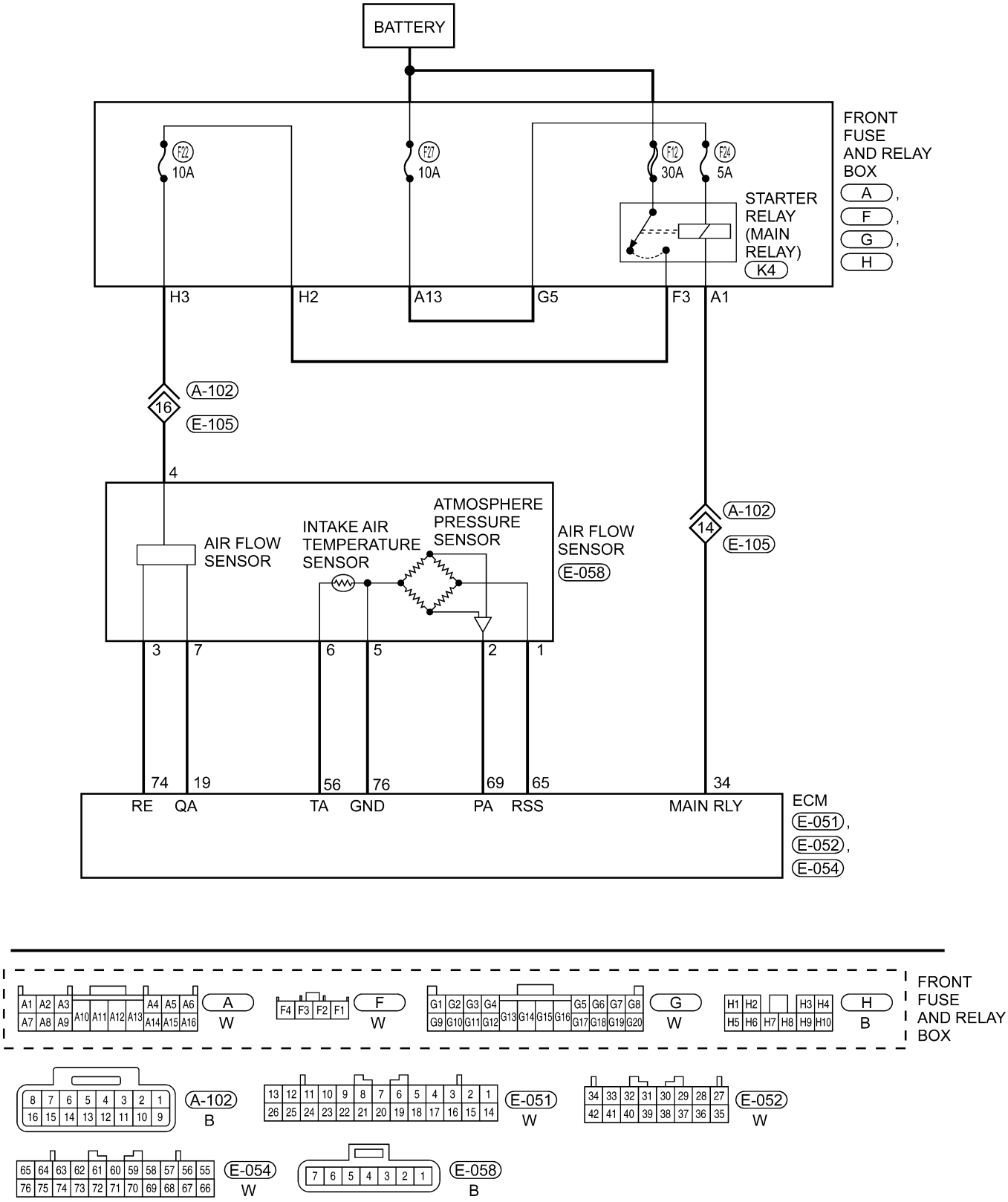

Downloaded from www.Manualslib.com manuals search engine

Check reference values between ECM terminals and ground under the following conditions:

ECM TERMINAL NO.	ITEM	CONDITION		DATA VOLTAGE
65	Regulated sensor supply	Ignition switch: ON	-	4.8 - 5.2 V
69	Atmosphere pressure sensor		Sea level altitude: 0 M	3.7 - 4.3 V (101 kPa)
			Sea level altitude: 600 M	95 kPa
			Sea level altitude: 1200 M	3.2 - 3.8 V (88 kPa)
			Sea level altitude: 1800 M	81 kPa
76	Sensor (GND)	Ignition switch: ON		0 V

On Board Diagnostic Logic

- Self-diagnosis detection logic.

DTC NO.	DTC DEFINITION	DTC DETECTION CONDITION	DTC SET CONDITION	POSSIBLE CAUSE
25	Atmosphere pressure sensor	• Ignition switch ON position for 60 seconds • Engine: Running	• Signal output is over 4.6 V for 4 seconds continuously (amount to 114 kPa atmosphere pressure). • Signal output is below 0.2 V for 4 seconds continuously (amount to 5.33 kPa atmosphere pressure).	• Atmosphere pressure sensor • Harness or connectors • ECM

DTC Confirmation Procedure:

Before performing the following procedure, confirm that battery voltage is more than 12 V.

- Turn ignition switch off.
- Connect the X-431 scan tool to the Data Link Connector (DLC) - use the most current software available.
- Turn ignition switch on.
- With the scan tool, record and erase stored DTCs in the ECM.
- Start engine and warm it to normal operating temperature, then select view DTC and data stream.
- If the DTC is detected, the DTC condition is current. Go to Diagnostic Procedure - Step 1.
- If the DTC is not detected, the DTC condition is intermittent (See Diagnostic Help and Intermittent DTC Troubleshooting in Section 03 Electronic Engine Controls for more information.

NOTE :
Before performing the following procedure, make sure that the ECM ground connection is in good condition.

NOTE :
While performing electrical diagnosis & testing, always refer to the electrical schematics for specific circuit and component information.

Downloaded from www.Manualslib.com manuals search engine

Diagnostic Procedure

1. CHECK ATMOSPHERE PRESSURE SENSOR ELECTRICAL CONNECTOR

- Turn ignition switch off.
- Disconnect the atmosphere pressure sensor (atmosphere pressure sensor is built-into) electrical connector (1).
- Inspect the electrical connector for damage.

Is the electrical connector OK?

Yes >> Go to the next step.

No >> Repair or replace the electrical connector as necessary.

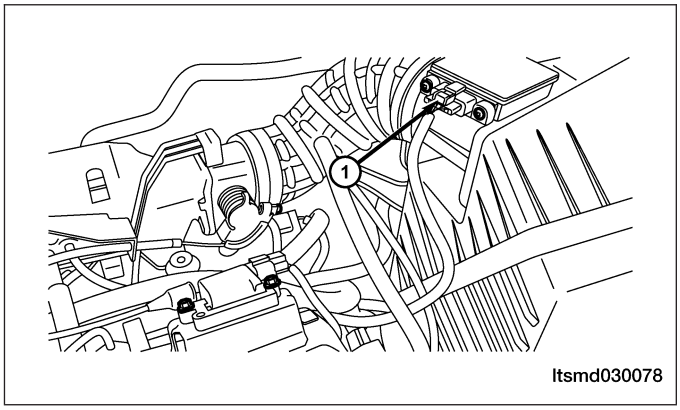

2. CHECK ATMOSPHERE PRESSURE SENSOR POWER SUPPLY CIRCUIT

- Turn ignition switch on.
- Check supply voltage between atmosphere pressure sensor connector E-058, terminal 1 and ground in the atmosphere pressure sensor electrical connector E-058.
- 4.8 - 5.2 V should exist.

Is the check result normal?

Yes >> Go to the next step.

No >> Repair circuit for an open or short in harness or connectors.
If circuit is normal, go to the next step.

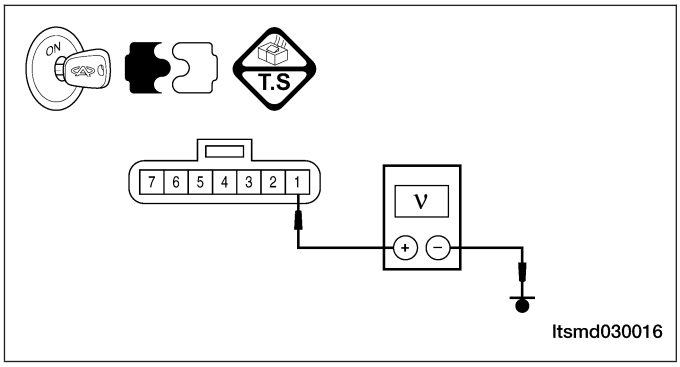

3. CHECK ATMOSPHERE PRESSURE SENSOR GROUND CIRCUIT FOR AN OPEN OR SHORT

- Turn ignition switch off.
- Disconnect ECM harness connector.
- Check harness continuity between following terminals.

ATMOSPHERE PRESSURE SENSOR TERMINAL	ECM TERMINAL
5	76

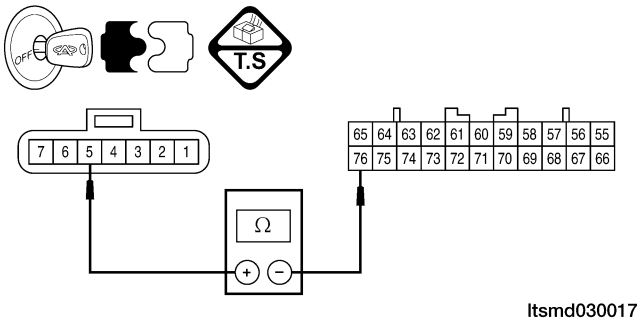

Downloaded from www.Manualslib.com manuals search engine

- Continuity should exist.
- Also check harness for short to power and short to ground.

Is the check result normal?

Yes >> Go to the next step.

No >> Repair or replace circuit for an open or short to power or short to ground in harness or connectors.

4. CHECK ATMOSPHERE PRESSURE SENSOR SIGNAL CIRCUIT

- Check harness continuity between ECM terminal 69 and atmosphere pressure sensor terminal 2.
- Continuity should exist.
- Also check harness for short to power and short to ground.

Is the check result normal?

Yes >> Go to the next step.

No >> Repair or replace harness or connectors.

5. CHECK ATMOSPHERE PRESSURE SENSOR

- Connect ECM connector.
- Connect atmosphere pressure sensor connector.
- With the X-431, select view data stream.
- Check sensor signal output.

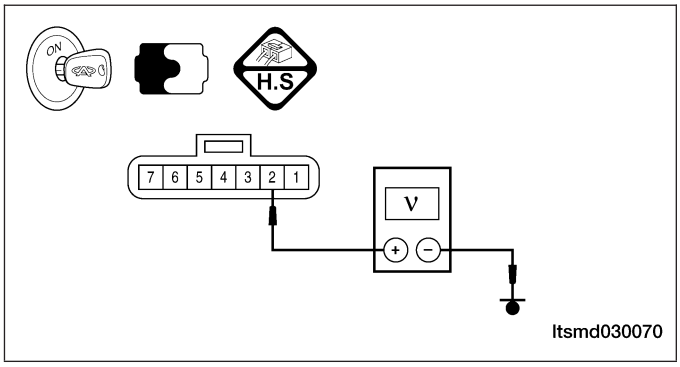

TERMINAL NO.	ITEM	CONDITION		DATA (DC VOLTAGE)
65	Regulated sensor supply	Ignition switch: ON	-	4.8 - 5.2 V
69	Atmosphere pressure sensor		• Sea level altitude: 0 M	3.7 - 4.3 V (101 kPa)
			• Sea level altitude: 600 M	95 kPa
			• Sea level altitude: 1200 M	3.2 - 3.8 V (88 kPa)
			• Sea level altitude: 1800 M	81 kPa
76	Sensor (GND)	Ignition switch: ON		0 V

Is the check result normal?

Yes >> Go to the next step.

No >> Replace atmosphere pressure sensor.

Downloaded from www.Manualslib.com manuals search engine

6. CHECK DTC

- With the X-431 scan tool, read ECM DTCs.
- Refer to ″DTC Confirmation Procedure″.

Is DTC 25 still present?

Yes >> Replace the ECM.

No >> The system is now operating properly.
Reassemble the vehicle and road test to verify the customers complaint is repaired.

Downloaded from www.Manualslib.com manuals search engine

31 - Knock Sensor

EEC - 2.4L - KS - 01

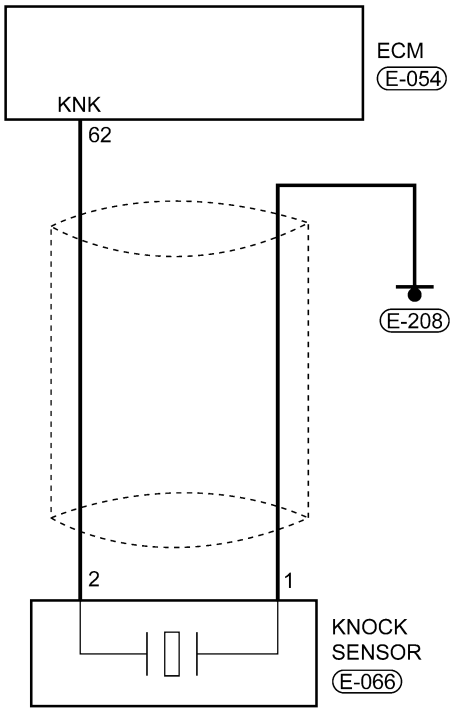

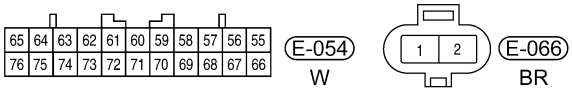

ltsmw030006t

Downloaded from www.Manualslib.com manuals search engine

Check reference values between ECM terminals and ground under the following conditions:

ECM TERMINAL NO.	ITEM	TEST METHOD	DATA (DC VOLTAGE)
62	Knock sensor	• Test Method 1: Knock at cylinder with rubber hammer • Test Method 2: Knock at sensor slightly	Output signal voltage should exist.

On Board Diagnostic Logic

- Self-diagnosis detection logic.

DTC NO.	DTC DEFINITION	DTC DETECTION CONDITION	POSSIBLE CAUSE
31	Knock sensor	An excessive voltage from the sensor is sent to ECM.	• Knock sensor • Harness or connectors • ECM

DTC Confirmation Procedure:

Before performing the following procedure, confirm that battery voltage is more than 12 V.

- Turn ignition switch off.
- Connect the X-431 scan tool to the Data Link Connector (DLC) - use the most current software available.
- Turn ignition switch on.
- With the scan tool, record and erase stored DTCs in the ECM.
- Run engine for a while then select view DTC.
- If DTC is detected, go to Diagnostic Procedure - Step 1.
- If the DTC is not detected, the DTC condition is intermittent (See Diagnosis & Testing Diagnostic Help in Section 03 Electronic Engine Controls).

NOTE :
Before performing the following procedure, make sure that the ECM ground connection is in good condition.

NOTE :
While performing electrical diagnosis & testing, always refer to the electrical schematics for specific circuit and component information.

Diagnostic Procedure

1. CHECK GROUND CONNECTION

- Turn ignition switch off.
- Loosen and retighten ground screws on the body (See Ground Inspection in Section 03 Electronic Engine Controls).
- Inspect the ground connection E-208 (See Vehicle Wiring Harness Layout - Engine Room Harness (With Mitsubishi 2.4L Engine) in Section 16 Wiring).

Is the ground connections OK?

Yes >> Go to the next step.

No >> Repair or replace ground connection.

Downloaded from www.Manualslib.com manuals search engine

2. CHECK KNOCK SENSOR ELECTRICAL CONNECTOR

- Disconnect the knock sensor electrical connector E-066 (1).
- Inspect the electrical connector for damage.

Is the electrical connector OK?

Yes >> Go to the next step.

No >> Repair or replace the electrical connector as necessary.

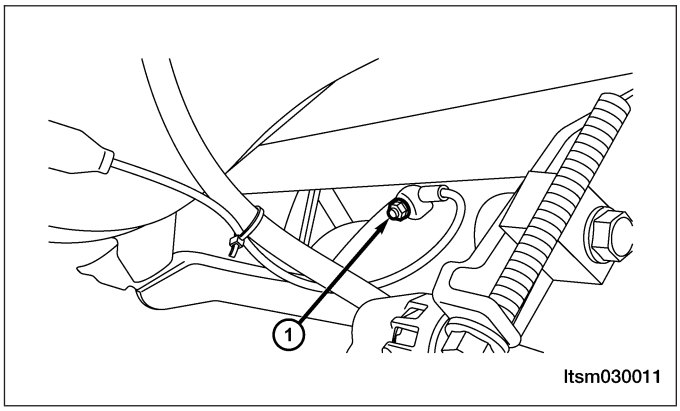

3. CHECK THE KNOCK SENSOR GROUND CIRCUIT

- Check continuity between knock sensor terminal 1 and ground.
- Continuity should exist.

Is the check result normal?

Yes >> Go to the next step.

No >> Repair or replace the knock sensor ground circuit.

4. CHECK KNOCK SENSOR SIGNAL CIRCUIT

- Disconnect ECM harness connector.
- Check harness continuity between sensor connector E-066, terminal 1 and ground, sensor terminal 2 and ECM terminal 62.

CHECK SENSOR CIRCUIT	
ECM TERMINAL	KNOCK SENSOR TERMINAL
62	2

- Also check harness for short to power and short to ground.

Is the check result normal?

Yes >> Go to the next step.

No >> Repair circuit for an open or short in harness or connectors.

Downloaded from www.Manualslib.com manuals search engine

5. CHECK KNOCK SENSOR SIGNAL

- Connect knock sensor (1) connector.
- Set multimeter to voltage range.
- Check knock sensor (1) output signal as table shown.

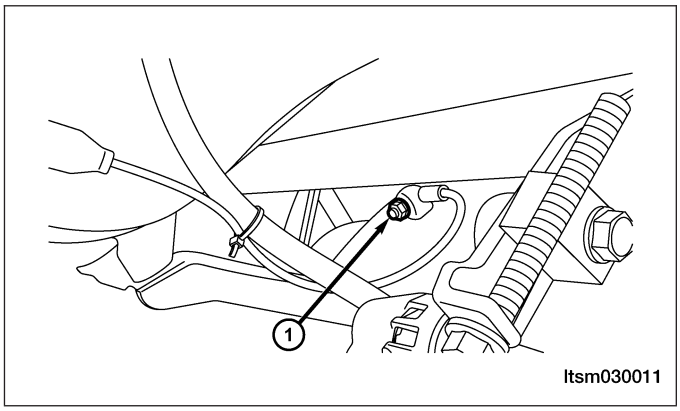

CHECK OUTPUT SIGNAL		
KNOCK SENSOR TERMINAL NO.	TEST METHOD	DATA (AVERAGE DC VOLTAGE)
1 & 2	• Test Method 1: Knock at cylinder with rubber hammer.	Output signal voltage should exist.
	• Test Method 2: Knock at sensor slightly.	

- Output signal voltage should exist.

Is the check result normal?

Yes >> Go to the next step.

No >> Replace knock sensor.

6. CHECK DTC

- With the X-431 scan tool, read ECM DTCs.
- Refer to ″DTC Confirmation Procedure″.

Is DTC 31 still present?

Yes >> Replace the ECM.

No >> The system is now operating properly.
Reassemble the vehicle and road test to verify the customers complaint is repaired.

Downloaded from www.Manualslib.com manuals search engine

41 - Injector

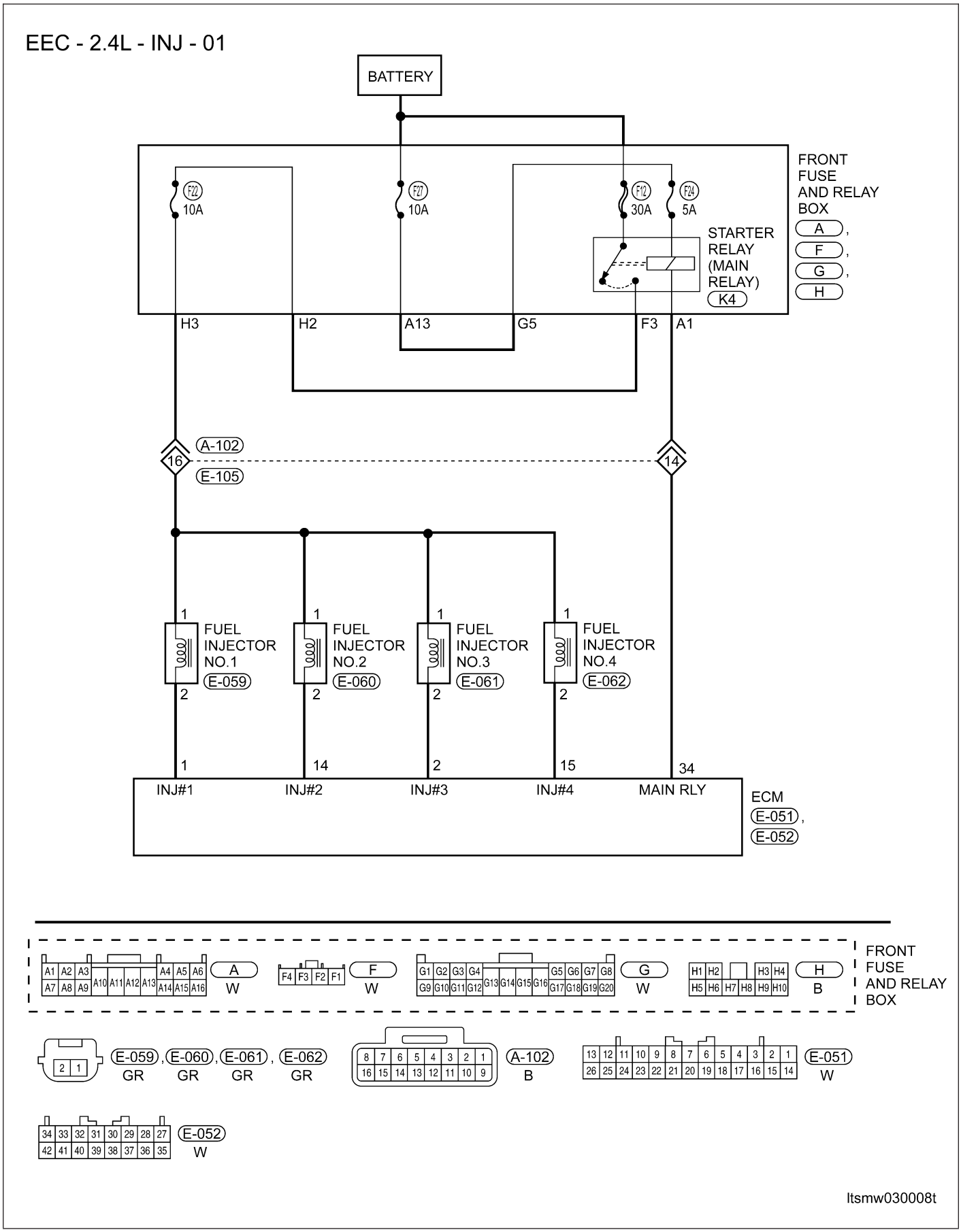

Downloaded from www.Manualslib.com manuals search engine

Check reference values between ECM terminals and ground under the following conditions:

ECM TERMINAL NO.	ITEM	CONDITION	DATA (DC VOLTAGE)
1	Injector 1	• Engine is running • Warm-up condition • Accelerate suddenly	Voltage: 11 - 14 V
2	Injector 3		
14	Injector 2		
15	Injector 4		

On Board Diagnostic Logic

- Self-diagnosis detection logic.

DTC NO.	DTC DEFINITION	DTC DETECTION CONDITION	POSSIBLE CAUSE
41	Injector	Engine is running	• Injector • Harness or connectors • ECM

DTC Confirmation Procedure:

Before performing the following procedure, confirm that battery voltage is more than 12 V.
- Turn ignition switch off.
- Connect the X-431 scan tool to the Data Link Connector (DLC) - use the most current software available.
- Turn ignition switch on.
- With the scan tool, record and erase stored DTCs in the ECM.
- Start engine and warm it to normal operating temperature then select view DTC.
- If DTC is detected, go to Diagnostic Procedure - Step 1.
- If the DTC is not detected, the DTC condition is intermittent (See Diagnosis & Testing Diagnostic Help in Section 03 Electronic Engine Controls).

NOTE :
Before performing the following procedure, make sure that the ECM ground connection is in good condition.

NOTE :
While performing electrical diagnosis & testing, always refer to the electrical schematics for specific circuit and component information.

Diagnostic Procedure

1. CHECK GROUND CONNECTION

- Turn ignition switch off.
- Loosen and retighten ground screws on the body (See Ground Inspection in Section 03 Electronic Engine Controls).
- Inspect the ground connection E-208 (See Vehicle Wiring Harness Layout - Engine Room Harness (With Mitsubishi 2.4L Engine) in Section 16 Wiring).

Is the ground connections OK?

Yes >> Go to the next step.

No >> Repair or replace ground connection.

Downloaded from www.Manualslib.com manuals search engine

2. INSPECTION START

- Start engine.

Is any cylinder ignited?

Yes >> If with the X-431, go to the next step.
If without the X-431, go to step 4.

No >> Go to step 5.

3. PERFORM ACTIVE TEST FUNCTION

- Select ″ACTIVE TEST″ menu.
- Perform injector active test.
- Make sure that each test produces a momentary engine speed drop.

Is the check result normal?

Yes >> The system is OK.

No >> Go to step 5.

4. CHECK FUNCTION OF INJECTOR

- Listen to injector operating sound one by one.

Do all injectors clicking noise exist?

Yes >> Go to step 10.

No >> Go to the next step.

5. CHECK INJECTOR ELECTRICAL CONNECTOR

- Turn ignition switch off.
- Disconnect the injector electrical connector (1).
- Inspect the electrical connector for damage.

Is the electrical connector OK?

Yes >> Go to the next step.

No >> Repair or replace the electrical connector as necessary.

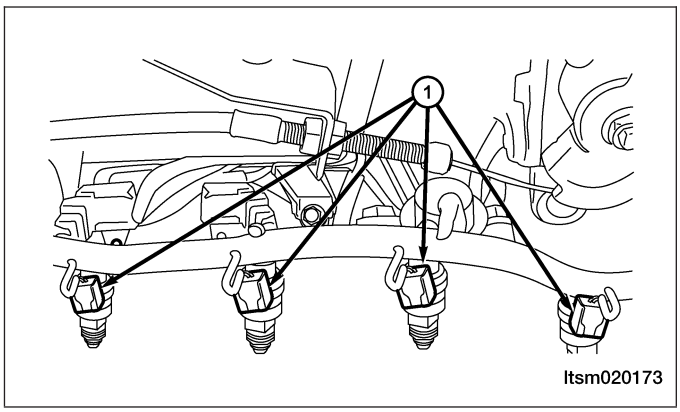

Downloaded from www.Manualslib.com manuals search engine

6. CHECK INJECTOR POWER SUPPLY CIRCUIT FOR OPEN OR SHORT

- Turn ignition switch on.
- Check injector supply voltage between sensor terminal 1 and ground in the electrical connector.
- Battery voltage should exist.

Is the check result normal?

Yes >> Go to step 8.

No >> Go to the next step.

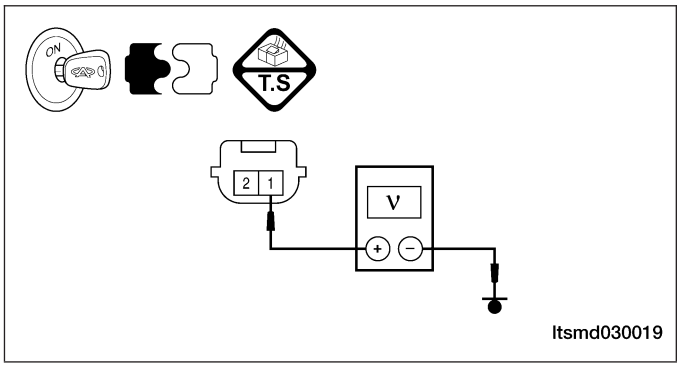

7. DETECT MALFUNCTIONING PART

- Disconnect injector harness connector.
- Check the following:
  - Harness connectors A-102, E-105
  - Front fuse and relay box H3
  - Fuse 22, Fuse 12
  - Harness for open or short between injector and fuse

Is the check result normal?

Yes >> Go to the next step.

No >> Repair or replace malfunctioning part.

8. CHECK INJECTOR CONTROL CIRCUITS FOR AN OPEN AND SHORT

- Turn ignition switch off.
- Disconnect ECM harness connector.
- Check harness continuity between following terminals.

INJECTOR NO.	ECM TERMINAL	INJECTOR TERMINAL
1	1	2
2	14	2
3	2	2
4	15	2

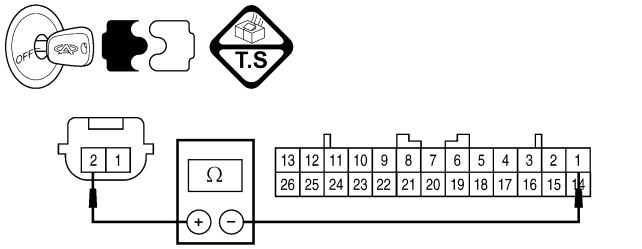

Downloaded from www.Manualslib.com manuals search engine

- Continuity should exist.
- Also check harness for short to power or short to ground.

Is the check result normal?

Yes >> Go to step 10.

No >> Go to the next step.

9. DETECT MALFUNCTIONING PART

- Check harness for an open or short between injector control circuit and ground.

Is the check result normal?

Yes >> Go to the next step.

No >> Repair harness or connectors.

10. CHECK INJECTOR

- Check resistance as table shown.

INJECTOR NO.	INJECTOR TERMINAL	RESISTANCE (APPROXIMATELY) Ω (20°C)
1	1 & 2	13 - 16
2	1 & 2	
3	1 & 2	
4	1 & 2	

- Also check signal output.
- Connect ECM connector.
- Connect injector connector.

TERMINAL NO.	ITEM	CONDITION	DATA (DC VOLTAGE)
1	Injector 1	• Engine is running • Warm-up condition • Accelerate suddenly	Voltage: 11 - 14 V
2	Injector 3		
14	Injector 2		
15	Injector 4		

Downloaded from www.Manualslib.com manuals search engine

- With the X-431, select data stream:
  - Injector (condition 1) - Idle switch is close while TPS signal output is high 50 - 100 mV than signal output in idle position.
  - Injector (condition 2) - This inject control time under two condition: crank speed below 250 RPM, power supply is 11 voltage.

CHECK ITEM	CHECK CONTENT		NORMAL VALUE: MS
Injector (condition 1)	• Engine condition: Running	ECT: 0°C	13 - 20
		ECT: 20°C	27 - 41
		ECT: 80°C	6.8 - 10.2
Injector (condition 2)	• ECT: 80 - 95°C • Lamp and all accessories: OFF • Transaxle: Neutral	Engine condition: Idle	1.9 - 3.1
		2500 RPM	1.7 - 2.9
		Engine high running idle suddenly	Raise

Is the check result normal?

Yes >> Go to the next step.

No >> Replace injector.

11. CHECK DTC

- With the X-431 scan tool, read ECM DTCs.
- Refer to ″DTC Confirmation Procedure″.

Is DTC 41 still present?

Yes >> Replace the ECM.

No >> The system is now operating properly.
Reassemble the vehicle and road test to verify the customers complaint is repaired.

Downloaded from www.Manualslib.com manuals search engine

44 - Ignition Signal

IGNITION CONTROL SYSTEM - WITH 2.4L ENGINE SYSTEM

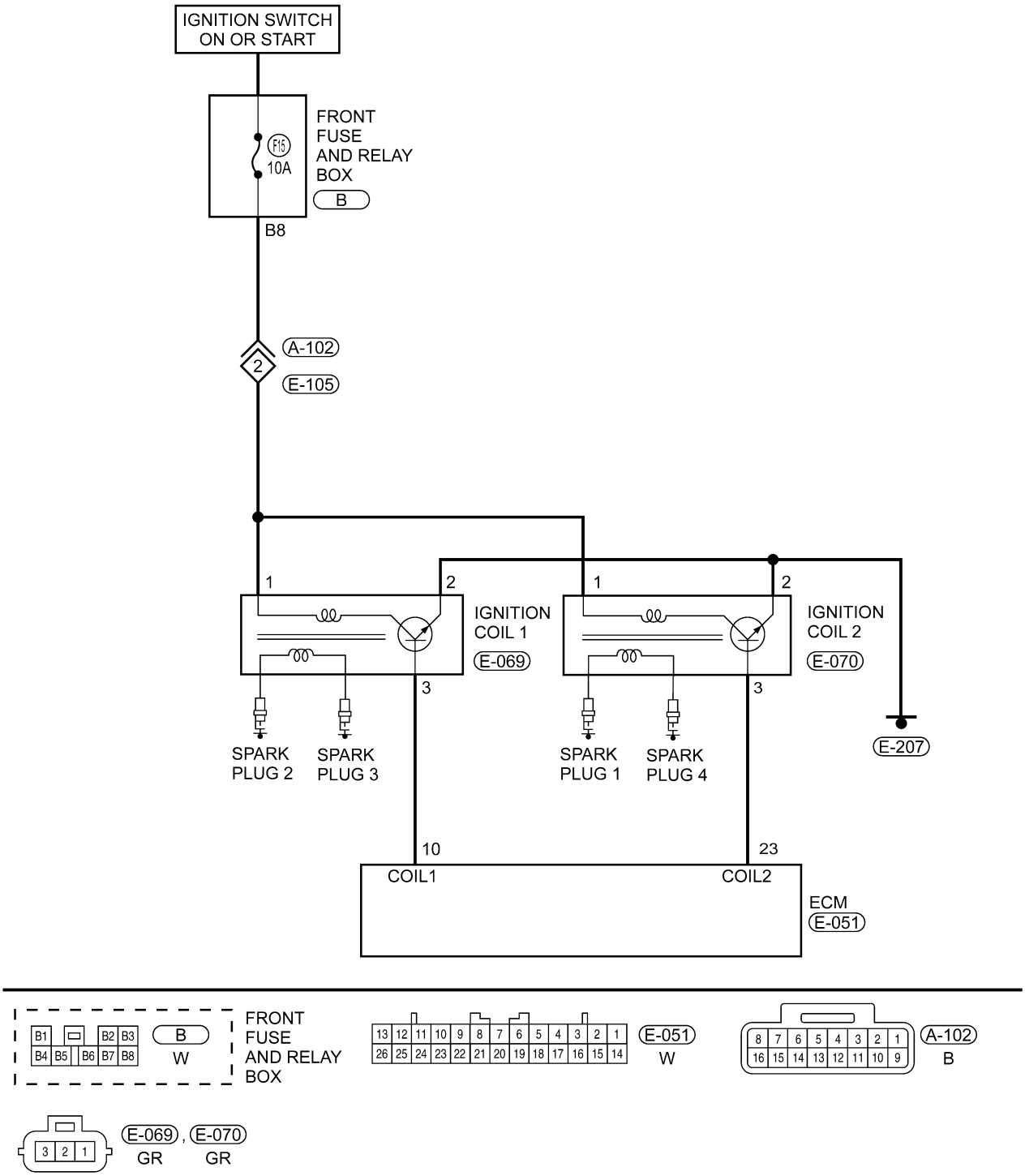

ltsmw030007t

Downloaded from www.Manualslib.com manuals search engine

Check reference values between ECM terminals and ground under the following conditions:

ECM TERMINAL NO.	ITEM	CONDITION	DATA (DC VOLTAGE)
10	Ignition coil 1	Engine: 3000 RPM	0.3 - 3.0 V
23	Ignition coil 2		0.3 - 3.0 V

On Board Diagnostic Logic

- Self-diagnosis detection logic.

DTC NO.	DTC DEFINITION	DTC DETECTION CONDITION	DTC SET CONDITION	POSSIBLE CAUSE
44	Ignition signal	• Engine speed: 50 - 4000 RPM • Except decelerate and accelerate suddenly or decelerate suddenly	The misfire times of No.1 and No.4 or No.2 and No.3 is more than the reset misfire times of per 1000 RPM.	• Ignition coil • Ignition primary harness or connectors • Spark plug and tension cable • Cylinder pressure • ECM

DTC Confirmation Procedure:

Before performing the following procedure, confirm that battery voltage is more than 12 V.

- Turn ignition switch off.
- Connect the X-431 scan tool to the Data Link Connector (DLC) - use the most current software available.
- Turn ignition switch on.
- With the scan tool, record and erase stored DTCs in the ECM.
- Start engine and warm it to normal operating temperature then select view DTC.
- If DTC is detected, go to Diagnostic Procedure - Step 1.
- If the DTC is not detected, the DTC condition is intermittent (See Diagnosis & Testing Diagnostic Help in Section 03 Electronic Engine Controls).

NOTE :
Before performing the following procedure, make sure that the ECM ground connection is in good condition.

NOTE :
While performing electrical diagnosis & testing, always refer to the electrical schematics for specific circuit and component information.

Diagnostic Procedure

1. CHECK GROUND CONNECTION

- Turn ignition switch off.
- Loosen and retighten ground screws on the body (See Ground Inspection in Section 03 Electronic Engine Controls).
- Inspect the ground connections E-207 and E-208 (See Vehicle Wiring Harness Layout - Engine Room Harness (With Mitsubishi 2.4L Engine) in Section 16 Wiring).

Is the ground connections OK?

Yes >> Go to the next step.

No >> Repair or replace ground connection.

Downloaded from www.Manualslib.com manuals search engine

2. CHECK ENGINE START

- Start the engine.

Is any cylinder ignited?

Yes >> If with the X-431, go to the next step.
If without the X-431, go to step 3.

No >> Go to step 4.

3. PERFORM ACTIVE TEST FUNCTION

- Select "ACTIVE TEST" menu.
- Perform ignition active test (If the X-431 has the function).
- Make sure that each test produces a momentary engine speed drop.

Is the check result normal?

Yes >> Inspection end.

No >> Go to step 4.

4. CHECK FUNCTION OF IGNITION

- Let engine run at 3000 RPM.
- Read voltage signal between ECM terminals 10, 23 and ground.

IGNITION COIL TERMINAL NO.	ITEM	CONDITION	DATA (DC VOLTAGE)
10	Ignition coil 1 terminal 3	Engine: 3000 RPM	0.3 - 3.0 V
23	Ignition coil 2 terminal 3		0.3 - 3.0 V

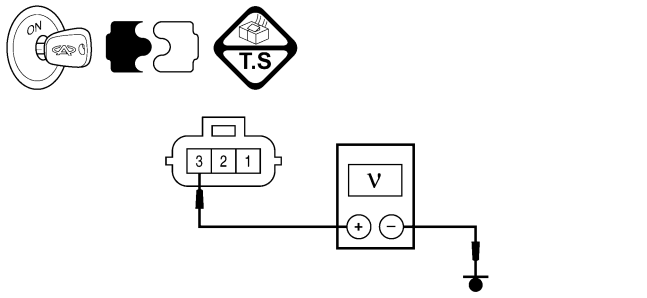

- If with check tool-timing mark lamp, check the actual ignition time.

CHECK ITEM	CONTENT		NORMAL VALUE
Ignition coil with power transistor	• Engine: Warm-up condition • Timing lamp (For check the actual ignition time)	Engine: Idle	2 - 18° BTDC
		Engine: 2500 RPM	18 - 38° BTDC

Is the check result normal?

Yes >> Go to step 10.

No >> Go to the next step.

Downloaded from www.Manualslib.com manuals search engine

5. CHECK IGNITION COIL ELECTRICAL CONNECTOR

- Turn ignition switch off.
- Disconnect the ignition coil electrical connector (1).
- Inspect the electrical connector for damage.

Is the electrical connector OK?

Yes >> Go to the next step.

No >> Repair or replace the electrical connector as necessary.

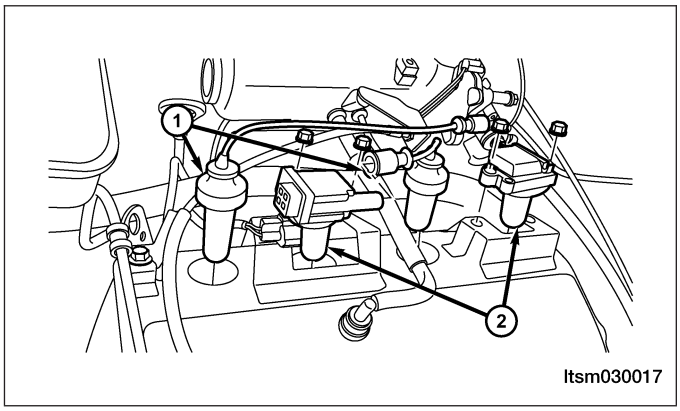

6. CHECK IGNITION COIL POWER SUPPLY CIRCUIT FOR AN OPEN OR SHORT

- Turn ignition switch on.
- Check supply voltage between ignition coil terminal 1 and ground in the ignition coil electrical connector.
- Battery voltage should exist.

Is the check result normal?

Yes >> Go to step 8.

No >> Go to the next step.

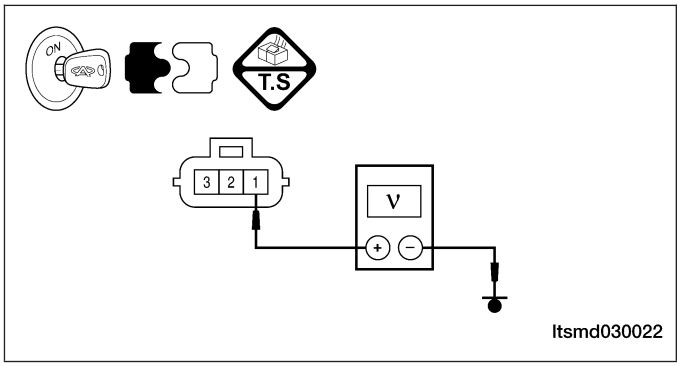

7. DETECT MALFUNCTIONING PART

- Check the following:
  - Fuse 15
  - Front fuse and relay box B8
  - Harness connectors A-102, E-105
  - Harness open or short between ignition coil and fuse

Is the check result normal?

Yes >> Go to the next step.

No >> Repair or replace malfunctioning parts.

Downloaded from www.Manualslib.com manuals search engine

8. CHECK IGNITION COIL GROUND CIRCUIT FOR AN OPEN

- Turn ignition switch off.
- Check harness continuity between ignition coil terminal 2 and ground.
- Continuity should exist.

Is the check result normal?

Yes >> Go to step 10.

No >> Go to the next step.

9. DETECT MALFUNCTIONING PART

- Check harness for an open or short between ignition coil and ground.

Is the check result normal?

Yes >> Go to the next step.

No >> Repair or replace the circuit for an open or short in harness or connectors.

10. CHECK IGNITION COIL INPUT SIGNAL CIRCUIT FOR AN OPEN OR SHORT

- Disconnect ECM connector.
- Check harness continuity between ECM terminal 10, 23 and ignition coil E-069, E-070, terminal 3.
- Continuity should exist.
- Check harness for short to power and short to ground.

Is the check result normal?

Yes >> Go to the next step.

No >> Repair harness in harness or connectors.

11. CHECK IGNITION COIL

- Check power transistor conducting state.
- Use simulation resistance meter.
- Connect the positive lead of the simulation resistance meter to the terminal of the power transistor.

CAUTION:

This test should be completed quickly (in 10 seconds), to prevent ignition coil from burning and power transistor from damaging.

- Also check resistance between ignition coil terminals as table shown.
- Also check ignition coil signal output.

Downloaded from www.Manualslib.com manuals search engine

TERMINAL NO.	RESISTANCE Ω (25°C)	
1 & 2	Except 0 or ∞	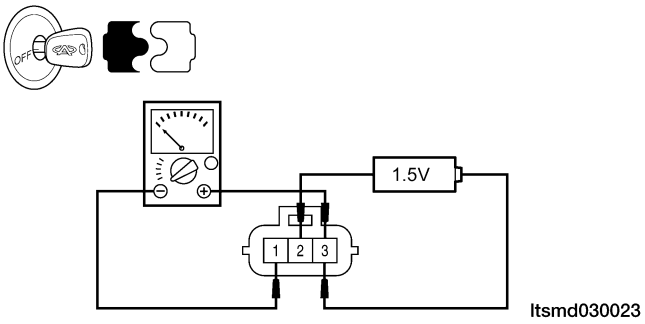
1 & 3	Except 0	
2 & 3		

Is the check result normal?

Yes >> Go to the next step.

No >> Replace the ignition coil.

12. CHECK HIGH TENSION CABLE RESISTANCE

- Check if there is crack exist.
- Check if the limited resistance value is 22 kΩ.

Is the check result normal?

Yes >> Go to the next step.

No >> Replace high tension cable.

13. CHECK SPARK PLUG

- Remove spark plug high tension cable.
- Remove spark plug.
- Check if there is burned electrode or damaged nonconductor. And check if the burned mark is even.
- Check if there is carbon deposit exist. Use steel wire or tool to eliminate it.
- Check if the clearance meet standard. The standard is: 1.1 mm.

Is the check result normal?

Yes >> Go to the next step.

No >> Replace or eliminate or adjust the spark plug.

14. CHECK DTC

- With the X-431 scan tool, read ECM DTCs.
- Refer to ″DTC Confirmation Procedure″.

Is DTC 44 still present?

Yes >> Replace the ECM.

No >> The system is now operating properly.
Reassemble the vehicle and road test to verify the customers complaint is repaired.

Downloaded from www.Manualslib.com manuals search engine

ON-VEHICLE SERVICE

Engine Coolant Temperature (ECT) Sensor

Description

The Engine Coolant Temperature (ECT) Sensor is beside the thermostat. The ECT Sensor is a negative thermal coefficient sensor.

Operation

The ECT sensor provides an input signal to the ECM. As temperature increases, resistance of the sensor decreases. As coolant temperature varies, the ECT sensor resistance changes resulting in a different voltage value at the ECT sensor signal circuit. The ECM uses the input to control air-fuel mixture, timing, and radiator fan on/off times.

Removal & Installation

1. Disconnect and isolate the negative battery cable.
2. Release the coolant system pressure.

WARNING!

Never remove the radiator pressure relief cap under any conditions while the engine is operating or hot. Failure to follow these instructions could result in personal injury or damage to the cooling system or engine. To avoid having scalding hot coolant or steam blow out of the cooling system, use extreme care when removing the pressure relief cap. Wait until the engine has cooled, then wrap a thick cloth around the pressure relief cap and turn it slowly one turn (counterclockwise). Step back while the pressure is released from the cooling system. When you are certain all the pressure has been released, (with a cloth) turn and remove the pressure relief cap. Failure to follow these instructions may result in serious personal injury.

3. Disconnect the coolant temperature sensor electrical connector.

CAUTION:
Remove the coolant temperature sensor when the engine is cold.

Downloaded from www.Manualslib.com manuals search engine

4. Remove the engine coolant temperature sensor (1).
   (Tighten: Engine coolant temperature sensor to 20 N·m).

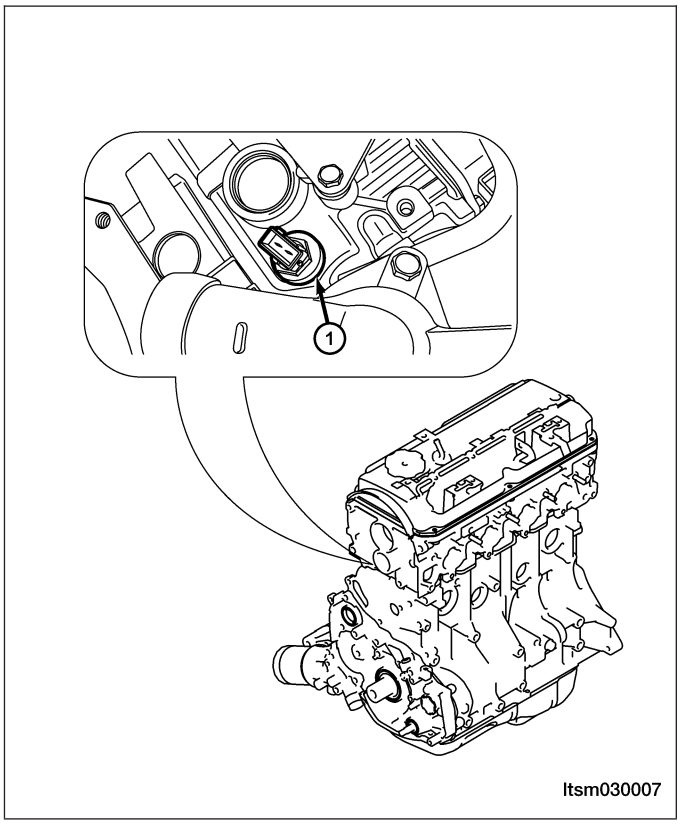

5. Discard the O-ring.
6. Installation is in the reverse order of removal.
   NOTE: Replace a new O-ring when installing.

Coolant Temperature Sensor (For Instrument Cluster)

Description

The coolant temperature sensor (for instrument cluster) is located on the water outlet fitting. It is bimetallic strip structure.

Operation

The coolant temperature sensor (for instrument cluster) provides an input to the instrument cluster. With the coolant temperature changes the bimetallic strip will curve complete the circuit and the temperature gauge will change.

Removal & Installation

1. Disconnect and isolate the negative battery cable.
2. Disconnect the coolant temperature sensor (for instrument cluster) electrical connector.
3. Remove the coolant temperature sensor (1) (for instrument cluster).
   (Tighten: Coolant temperature sensor (for instrument cluster) to 14 N·m)

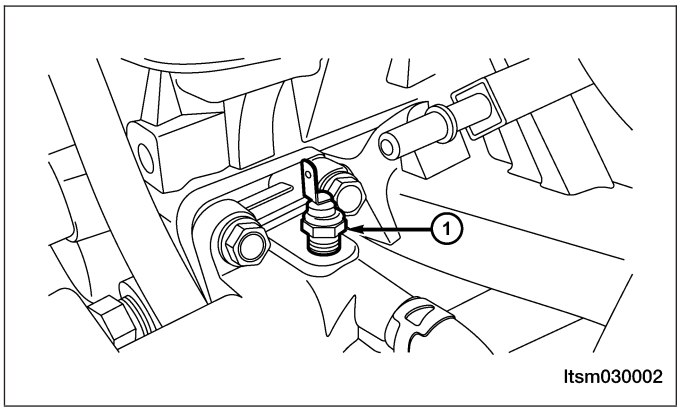

Downloaded from www.Manualslib.com manuals search engine

4. Installation is in the reverse order of removal.

CAUTION:
Before removing the coolant temperature sensor (for instrument cluster), release the coolant pressure and make sure the engine is cold.

Knock Sensor

Description

The knock sensor is attached to the cylinder block. The knock sensor is designed to detect engine vibration that is caused by detonation.

Operation

When the knock sensor detects a knock in one of the cylinders, it sends an input signal to the ECM. In response, the ECM retards ignition timing for all cylinders by a scheduled amount.

Knock sensors contain a piezoelectric material which constantly vibrates and sends an input voltage (signal) to the ECM while the engine operates. As the intensity of the vibration increases, the knock sensor output voltage also increases.

The voltage signal produced by the knock sensor increases with the amplitude of vibration. The ECM receives an input knock sensor voltage signal. If the signal rises above a predetermined level, the ECM will store that value in memory and retard ignition timing to reduce engine knock. If the knock sensor voltage exceeds a present value, the ECM retards ignition timing for all cylinders. It is not a selective cylinder retard.

The ECM ignores knock sensor input signal during engine idle conditions. Once the engine speed exceeds a specified value, knock retard is allowed.

Removal & Installation

1. Disconnect and isolate the negative battery cable.
2. Disconnect the knock sensor electrical connector.
3. Remove the knock sensor retaining bolt (1) and remove the knock sensor.
   (Tighten: Knock sensor retaining bolt to 20 N·m).

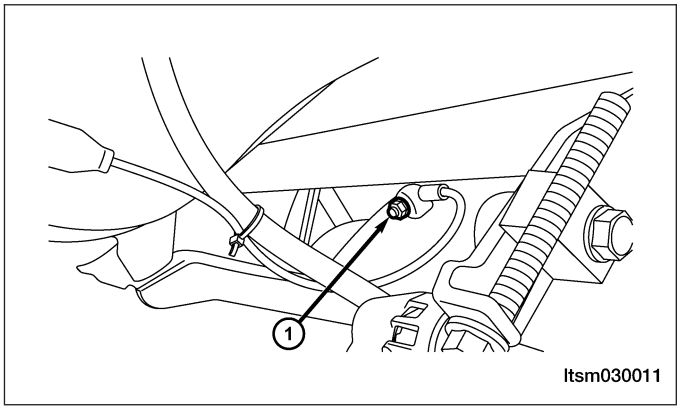

4. Installation is in the reverse order of removal.

Oxygen Sensor

Description

This vehicle is equipped with two oxygen sensors (upstream oxygen sensor & downstream oxygen sensor). The oxygen sensors are located before and after the three way catalyst. The oxygen sensors continually monitor the oxygen level in the exhaust gas. The sensor is made of ceramic zirconia. The zirconia generates voltage from approximately 1 volt in richer conditions to 0 volt in leaner conditions.

Operation

The O2 sensors produce voltages from 0 to 1 volt, depending upon the oxygen content of the exhaust gas. When a large amount of oxygen is present (caused by a lean air/fuel mixture, can be caused by misfire and exhaust leaks), the sensors produces a low voltage. When there is a lesser amount of oxygen present (caused by a rich air/fuel mixture, can be caused by internal engine problems) it produces a higher voltage. By monitoring the oxygen content and converting it to electrical voltage, the sensors act as a rich-lean switch.

Downloaded from www.Manualslib.com manuals search engine

The oxygen sensors are equipped with a heating element that keeps the sensors at proper operating temperature during all operating modes. Maintaining correct sensor temperature at all times allows the system to enter into closed loop operation sooner. Also, it allows the system to remain in closed loop operation during periods of extended idle.

Upstream Oxygen Sensor

The input from the upstream heated oxygen sensor tells the Engine Control Module (ECM) the oxygen content of the exhaust gas. Based on this input, the ECM fine tunes the air-fuel ratio by adjusting injector pulse width.

Downstream Oxygen Sensor

The downstream heated oxygen sensor signal is used to detect catalytic convertor deterioration. As the convertor deteriorates, the signal from the downstream sensor begins to match the upstream sensor signal except for a slight time delay. By comparing the downstream heated oxygen sensor signal to the signal from the upstream sensor, the ECM calculates catalytic convertor efficiency. This calculation is also used to establish the upstream O2 goal voltage (switching point).

Removal & Installation - Upstream Oxygen Sensor

1. Disconnect the negative battery cable.
2. Disconnect the oxygen sensor electrical connector.

CAUTION:
Remove the oxygen sensor after the exhaust pipe has cooled.

3. Remove the upstream oxygen sensor (1).
   (Tighten: Upstream oxygen sensor to 45 N·m)

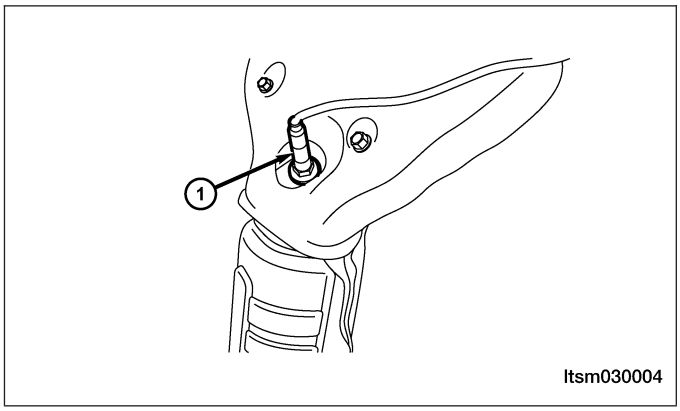

4. Installation is in the reverse order of removal.

Installation Notes:

- Before installing the oxygen sensor, coat the threads with rust inhibiting lubricant.

Downloaded from www.Manualslib.com manuals search engine

Removal & Installation - Downstream Oxygen Sensor

1. Disconnect the negative battery cable.
2. Disconnect the oxygen sensor electrical connector.

CAUTION:
Remove the oxygen sensor after the exhaust pipe has cooled.

3. Remove the downstream oxygen sensor (1).
   (Tighten: Downstream oxygen sensor to 45 N·m)

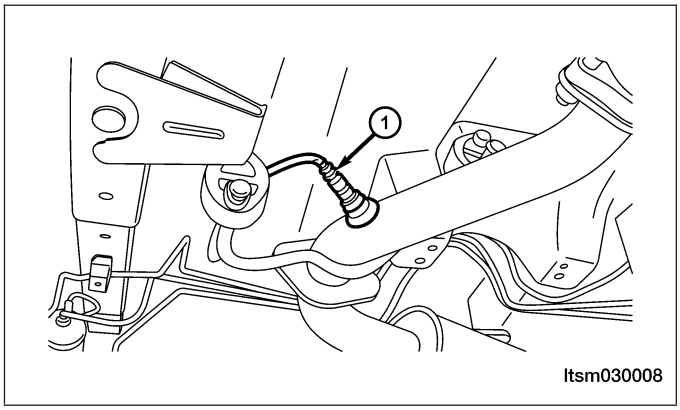

4. Installation is in the reverse order of removal.

Installation Notes:

- Before installing the oxygen sensor, coat the threads with rust inhibiting lubricant.

Downloaded from www.Manualslib.com manuals search engine

Camshaft Position (CMP) Sensor

Description

The Camshaft Position (CMP) sensor senses the protrusion of inlet valve cam sprocket to identify a particular cylinder. The CMP sensor senses the piston position. When the Crankshaft Position (CKP) sensor becomes inoperative, the CMP sensor provides various controls of engine parts instead, utilizing timing of cylinder identification signals. The sensor consists of a permanent magnet and Hall IC.

Operation

When engine is running, the high and low parts of the teeth cause the gap with the sensor to change. The changing gap cause the magnetic field near the sensor to change. Due to the changing magnetic field, the voltage from the sensor changes. The Engine Control Module (ECM) detects the voltage signal and identify piston position and cylinder timing.

Removal & Installation

1. Disconnect the negative battery cable.
2. Disconnect camshaft position sensor electrical connector from the wiring harness connector.
3. Remove the camshaft position sensor retaining bolt (1).
   (Tighten: Camshaft position sensor retaining bolt to 10 N·m)

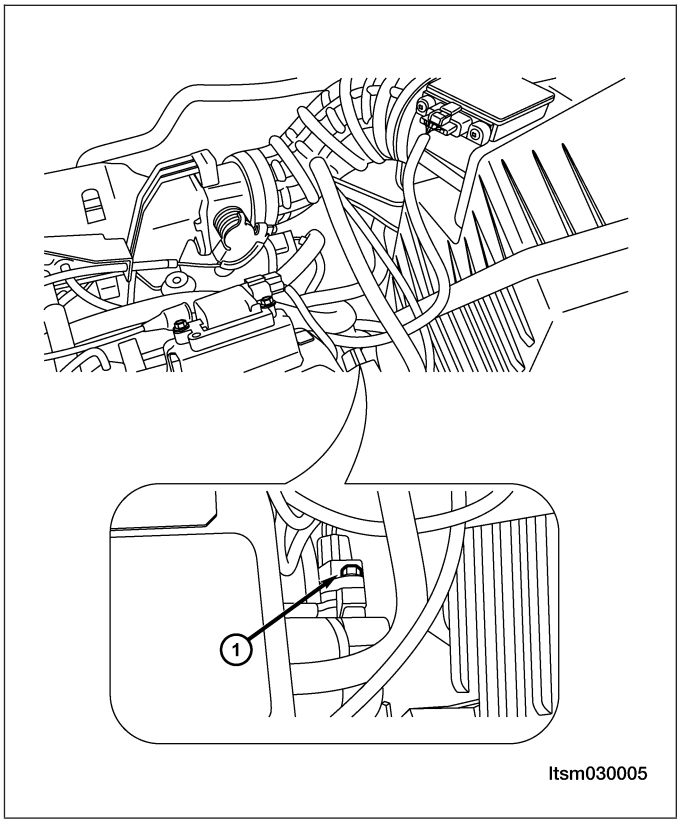

4. Remove camshaft position sensor.
5. Pull sensor up out of the cylinder head cover.
6. Installation is in the reverse order of the removal.

Downloaded from www.Manualslib.com manuals search engine

Air Flow Sensor

Description

The air flow sensor is placed in the air intake hose. The air flow sensor measures the intake flow rate by measuring a part of the entire intake flow. The air flow sensor converts the amount of air drawn into the engine into a voltage signal. The Engine Control Module (ECM) needs to know intake air volume to calculate engine load. This is necessary to determine how much fuel to inject.

Operation

The air flow sensor controls the temperature of the hot wire to a certain amount. The heat generated by the hot wire is reduced as the intake air flows around it. The more air, the greater the heat loss. Therefore, the electric current supplied to the hot wire is changed to maintain the temperature of the hot wire as air flow increases. The ECM detects the air flow by means of this voltage signal change.

Removal & Installation

1. Disconnect the negative battery cable.
2. Disconnect air flow sensor electrical connector from the wiring harness connector.
3. Remove the air flow sensor retaining bolts (1). (Tighten: Air flow sensor retaining bolt to 8 N·m)

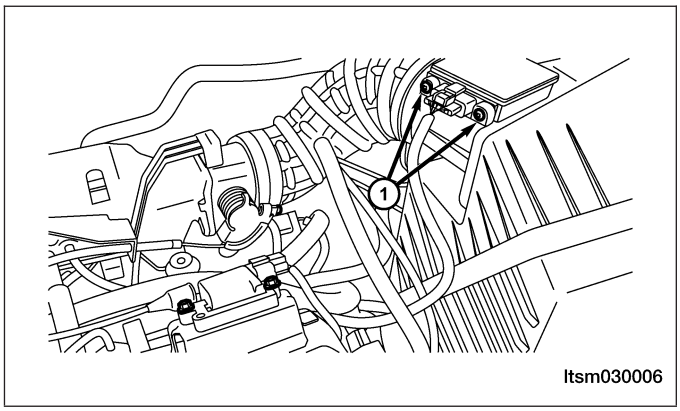

4. Remove the air flow sensor.
5. Installation is in the reverse order of removal.

Downloaded from www.Manualslib.com manuals search engine

Throttle Control Actuator

Description

The throttle body is located on the intake manifold. The throttle body meters air into the intake manifold.

Throttle control actuator consists of throttle control valve, throttle position sensor, idle air control motor, etc.

Operation

Filtered air from the air cleaner enters the intake manifold through the throttle body. A throttle valve (plate) is used to supply air for idle and driving conditions. The throttle position sensor is part the throttle body. The throttle position sensor signal is used by the ECM to determine throttle position. The ECM controls the throttle control to meter air into the engine. This regulates engine power. The vehicle is in sense a “Drive by Wire” system.

Removal & Installation

1. Remove the engine cover.
2. Disconnect the negative battery cable.
3. Disconnect the throttle position sensor and idle air control motor electrical connect on the throttle control actuator.
4. Remove the accelerator cable on the throttle control actuator.
5. Remove three hoses on the throttle control actuator.
6. Remove four throttle control actuator mounting bolts (1).
   (Tighten: Throttle control actuator bolts to 10 N·m)

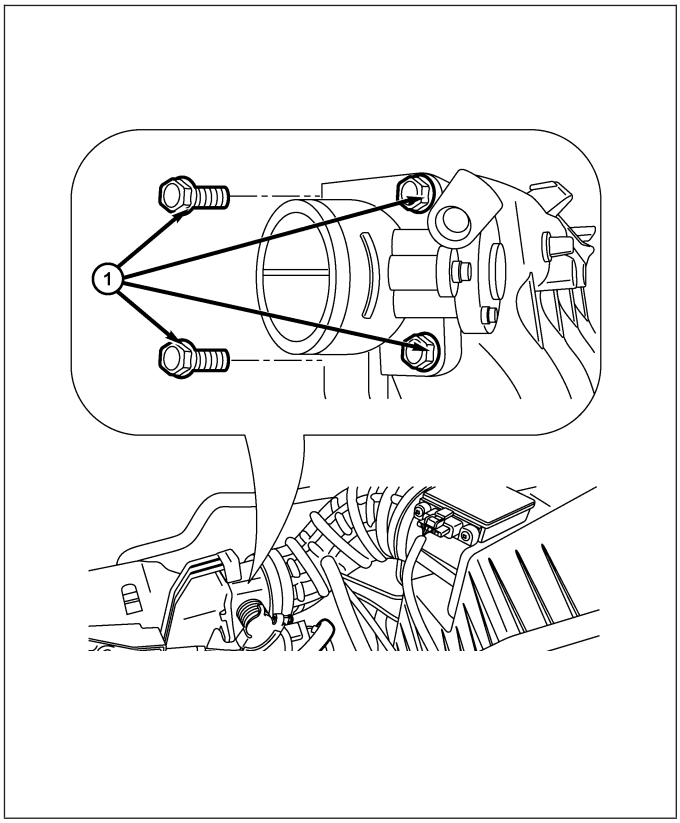

7. Remove the throttle control actuator and gasket carefully.
8. Installation is in the reverse order of removal.

NOTE :
Replace a new throttle control actuator gasket when installing.

Downloaded from www.Manualslib.com manuals search engine

Engine Control Module (ECM)

Description

The Engine Control Module (ECM) for this model is serviced only as a complete unit.

Operation

The ECM is a pre-programmed, microprocessor-based digital computer. It regulates ignition timing, air-fuel ratio, emission control devices, charging system, certain transmission features, speed control, air conditioning compressor clutch engagement and idle speed. The ECM can adapt its programming to meet changing operating conditions.

Removal & Installation

1. Disconnect the negative battery cable.
2. Remove the glove box (See Instrument Panel Removal & Installation in Section 15 Body & Accessories).
3. Disconnect the ECM connector.
4. Remove the ECM retaining bolts (1).
   (Tighten: ECM retaining bolts to 10 N·m)

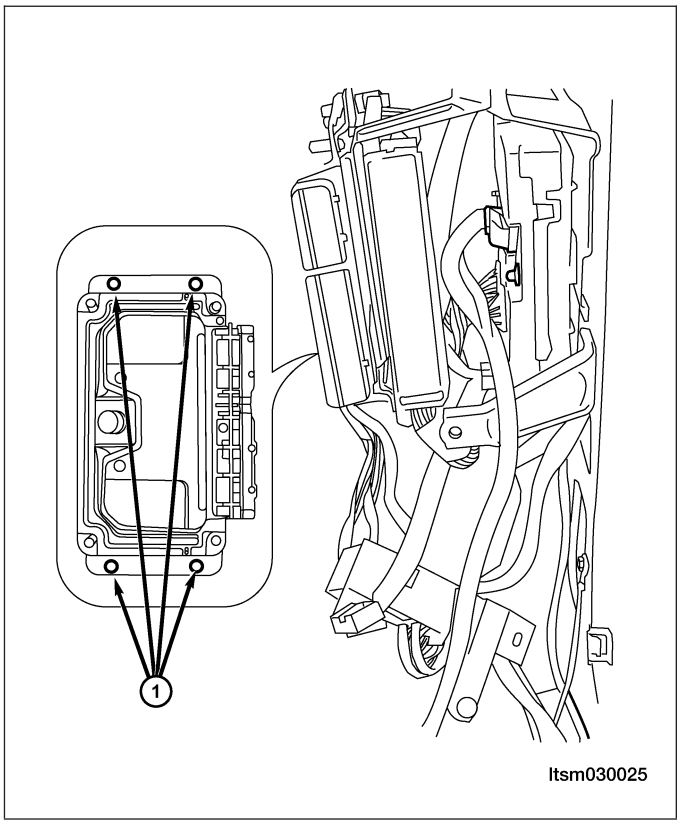

5. Remove the ECM.
6. Installation is in the reverse order of removal.

Downloaded from www.Manualslib.com manuals search engine

Throttle Position Sensor (TPS)

Description

The 4-wire throttle position sensor (TPS) is mounted on the throttle body and is connected to the throttle valve.

Operation

The TPS is a 4-wire variable resistor that provides the Engine Control Module (ECM) with an input signal that represents the throttle valve position of the throttle body. The sensor is connected to the throttle valve shaft. As the position of the throttle valve changes, the resistance (output voltage) of the TPS changes.

Removal & Installation

1. Disconnect the negative battery cable.
2. Disconnect throttle position sensor electrical connector clamp from the wiring harness connector.
3. Remove the throttle position sensor retaining bolts (1).

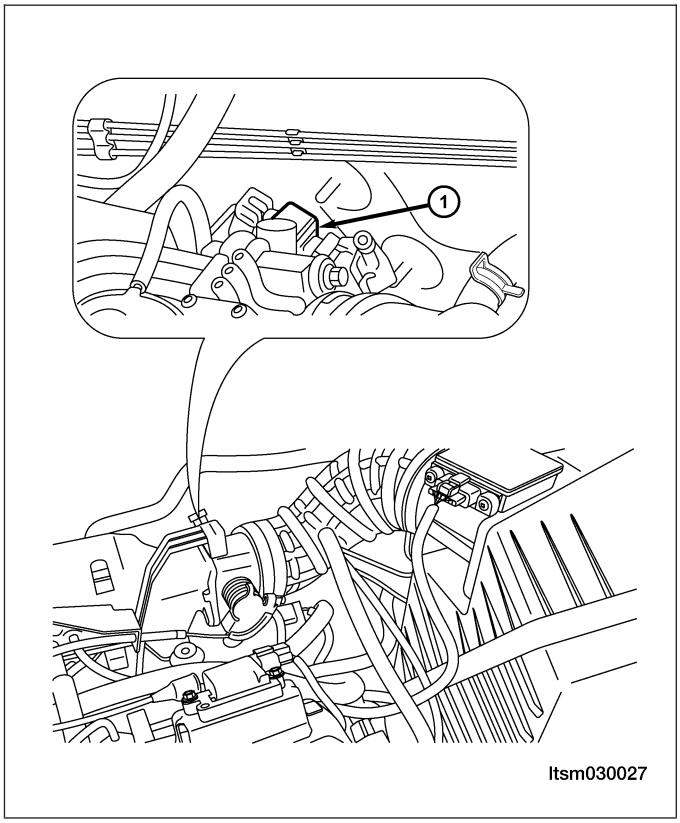

4. Remove the throttle position sensor.
5. Installation is in the reverse order of removal.

Downloaded from www.Manualslib.com manuals search engine

Idle Air Control (IAC) Motor

Description

The Idle Air Control (IAC) motor is mounted to the throttle body, and regulates the amount of air bypassing the control of the throttle valve. As engine loads and ambient temperatures change, engine RPM changes. A pintle on the IAC motor protrudes into a passage in the throttle body, controlling air flow through the passage. The IAC motor is control by the ECM to maintain the target engine idle speed.

Operation

At idle, engine speed can be increased by retracting the IAC motor pintle and allowing more air to pass through the port, or it can be decreased by restricting the passage with the pintle and diminishing the amount of air bypassing the throttle valve.

The IAC is called a stepper motor because it is moved in steps, or increments. Opening the IAC opens an air passage around the throttle valve with increases RPM.

Removal & Installation

1. Disconnect the negative battery cable.
2. Disconnect idle air control motor electrical connector from the wiring harness connector.
3. Remove the idle air control motor retaining bolts (1).
   (Tighten: Air control motor retaining bolt to 10 N·m)

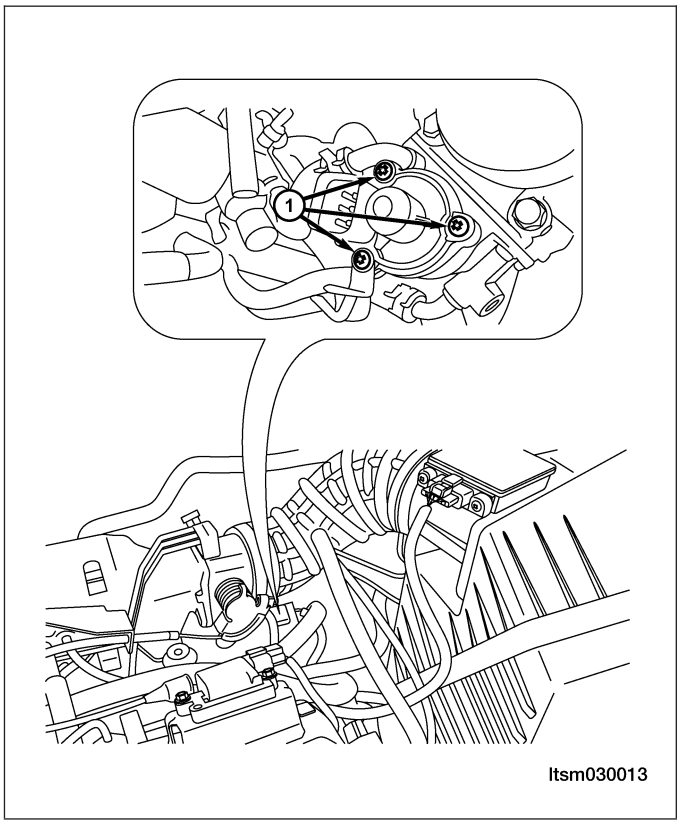

4. Remove the idle air control motor.
5. Installation is in the reverse order of removal.

Downloaded from www.Manualslib.com manuals search engine

Crankshaft Position (CKP) Sensor

Description

The Crankshaft Position (CKP) sensor is located on the flywheel shell facing the gear teeth of the signal plate. It detects the fluctuation of the engine revolution. The sensor consists of a permanent magnet and Induction coil.

Operation

When the engine is running, the high and low parts of the teeth cause the gap with the sensor to change. The changing gap cause the magnetic field near the sensor to change. Due to the changing magnetic field, the voltage from the sensor changes. The Engine Control Module (ECM) receives the voltage signal and detects the fluctuation of the engine revolution.

Removal & Installation

1. Disconnect the negative battery cable.
2. Disconnect the crankshaft position sensor electrical connector from the crankshaft position sensor.
3. Remove the accessory drive belt (See Accessory Drive Belt Removal & Installation in Section 02 Engine).
4. Remove the crankshaft pulley (See Crankshaft Pulley Removal & Installation in Section 02 Engine).
5. Remove the timing belt lower cover (See Timing Belt Lower Cover Removal & Installation in Section 02 Engine).
6. Remove the crankshaft position sensor retaining bolts (1).
   (Tighten: Crankshaft position sensor retaining bolt to 20 N·m)
7. Installation is in the order of removal.

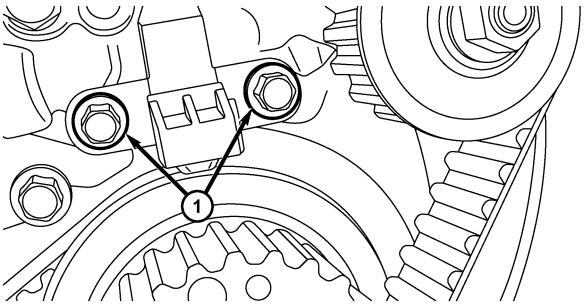

ltsm030012

Downloaded from www.Manualslib.com manuals search engine

2.4L ENGINE SYMPTOM DIAGNOSIS

Symptom Diagnostic Tests 03-544
General Troubleshooting Checks 03-544
Visual Inspection 03-544
Diagnostic Help 03-544
Symptom Diagnostic Test List 03-544
Engine Cranks Normal But Will Not Start 03-545
Engine Will Not Crank 03-547
Hard Start / Long Crank / Erratic Start / Erratic Crank 03-549
Fast Idle 03-552
Lack / Loss Of Power 03-553
Back Fires 03-556
Engine Poor Driveability 03-558
Low Idle / Stalls During Deceleration 03-562
Idle Speed Slow Return To Normal Idle 03-564

Downloaded from www.Manualslib.com manuals search engine

Symptom Diagnostic Tests

General Troubleshooting Checks

- Confirm the engine trouble light is working properly.
- Confirm that there are no DTCs recorded with the X-431 Scan Tool.
- Confirm that the customer's complaint is current, and the conditions that are causing the failure are present.

Visual Inspection

- Check the fuel system for any fuel leakage.
- Check the vacuum system for any broken, kinked or incorrectly linked vacuum pipes or hoses.
- Check the intake air pipe for being jammed, leaking, or damaged.
- Check the ignition system for any broken or aging spark plug wires and verify the engine firing order is correct.
- Check the engine ground cable and verify a clean and tight connection.
- Check the sensors and actuators electrical connectors and verify good contact and tight connection.

NOTE :
Repair any of the above conditions first before continuing with symptom diagnostics.

Diagnostic Help

- Confirm there are no current engine DTCs.
- Confirm that the failure exists and the customer complaint can be verified.
- Inspect the engine following the above steps and verify all engine features are operating properly.
- While servicing the vehicle, verify the service record, vehicle maintenance, engine compression pressures, mechanical ignition timing and fuel conditions.
- If replacing the Engine Control Module (ECM), carry out the validation test. If the failure no longer exists, the failure is in the ECM; if the failure still exists, reinstall the original ECM and repeat the diagnostic test.

Symptom Diagnostic Test List

SYMPTOM DEFINITION
Engine Cranks Normal But Will Not Start
Engine Will Not Crank
Hard Start / Long Crank Time
Fast Idle
Lack / Loss Of Power
Back Fires
Engine Poor Driveability
Low Idle / Stalls During Deceleration
Idle Speed Slow Return To Normal Idle

Downloaded from www.Manualslib.com manuals search engine

Engine Cranks Normal But Will Not Start

The following conditions apply to this symptom:

- The engine cranks at normal speed.
- The engine will not start.
- The battery is fully charged.

1. PRELIMINARY CHECKS

CAUTION:

Extended cranking because of a No Start can load the exhaust system with raw fuel, damaging the catalytic converter after the engine starts.

- Carry out the following preliminary checks:
  - Fuel quality
  - Electrical connections
  - Intake air tube integrity
  - Fuses and relays

Is the check result normal?

Yes >> Go to the next step.

No >> Repair as necessary.
Verify the symptom no longer exists.

2. CHECK DTC

- Turn the ignition switch on.
- With the scan tool X-431, select view DTC.

Are there any DTCs present?

Yes >> See the Diagnostic Trouble Code (DTC) List.
Go to the specific diagnostic test to troubleshoot the DTC.

No >> Go to the next step.

3. TRY TO START THE ENGINE WITH THE THROTTLE CLOSED

- Attempt to start the engine.

Does the engine start now with the throttle closed?

Yes >> Verify the symptom no longer exists.

No >> Go to the next step.

4. CHECK EXHAUST SYSTEM

- Inspect the vehicles exhaust system for restriction.

Is there a restriction in the exhaust system?

Yes >> Repair as necessary.

No >> Go to the next step.

Downloaded from www.Manualslib.com manuals search engine

5. CHECK ENGINE CYLINDER COMPRESSION

- Perform a compression test on the engine.

Is engine compression correct?

Yes >> Verify test results. If OK, see Diagnostic Test List to repair any additional symptoms.

No >> Check for cause.

Downloaded from www.Manualslib.com manuals search engine

Engine Will Not Crank

The following conditions apply to this symptom:

- The engine will not crank.

1. PRELIMINARY CHECKS

- Carry out the following preliminary vehicle inspection:
  - Fuel quality
  - Battery connections
  - Starter relay connections
  - Manual transmission clutch fully depressed
  - Engine immobilizer activated
  - Fuses/Fuse links

Is the check result normal?

Yes >> Go to the next step.

No >> Repair as necessary.
Verify the symptom no longer exists.

2. LISTEN FOR STARTER RELAY CLICKING

- Attempt to start the engine.

Is a clicking sound heard from the starter relay when the ignition key is turned to START?

Yes >> Go to the next step.

No >> Go to step 5.

3. CHECK STARTING SYSTEM

- Check the starter, starter ground, starter relay cable to starter and battery.

Is a fault indicated?

Yes >> Repair as necessary.

No >> Go to the next step.

4. CHECK OPERATION OF OTHER ELECTRICAL ACCESSORIES

- Check all accessories.

Do any other electrical accessories work?

Yes >> Go to the next step.

No >> Check the charging system.

Downloaded from www.Manualslib.com manuals search engine

5. CHECK DTC

- Turn the ignition switch on.
- With the scan tool X-431, read the DTC.

Are there any DTCs present?

Yes >> Check for cause.

No >> Go to the next step.

6. CHECK STARTING SYSTEM PRIMARY CIRCUITS

- Check the starting system primary circuits as follows:
  - Starter relay
  - Ignition switch

Are components/systems OK?

Yes >> Ensure customer's concern has been resolved.

No >> Repair as necessary.

Downloaded from www.Manualslib.com manuals search engine

Hard Start / Long Crank / Erratic Start / Erratic Crank

The following conditions apply to this symptom:

- The engine cranks for an extended period of time.
- The engine starts hard during a long cranking time.

1. PRELIMINARY CHECKS

- Confirm that the correct starting procedure was used by the customer before proceeding with diagnosis.
- Carry out the following preliminary checks:
  - Vacuum leaks
  - Fuel quality (concerns such as correct octane, contamination, winter/summer blend)
  - Intake air system (tubes)
  - Air cleaner (restrictions)
  - Battery condition and starter current draw.

Are all checks OK?

Yes >> Go to the next step.

No >> Repair as necessary.
Verify the symptom no longer exists.

2. CHECK ECM DTC

- With scan tool X-431, select view DTC and data stream in ECM.

Are there any DTCs present?

Yes >> See the Diagnostic Trouble Code (DTC) List.
Go to the specific diagnostic test to troubleshoot the DTC.

No >> Go to the next step.

3. CHECK SECONDARY IGNITION SYSTEM

- Perform the following to test the secondary ignition system:
  - Disconnect the injector fuse.
  - Remove any of the 4 spark plugs.
  - Connect the spark plug to spark plug wire.
  - Ground the spark plug on the cylinder block.
  - Crank the engine to test the secondary ignition system with the spark plugs removed.

Is a strong blue spark visible at each spark plug while cranking the engine?

Yes >> Go to the next step.

No >> Check Camshaft Position (CMP) sensor signal at ECM.
If CMP sensor is OK, check the following:
- Crankshaft Position (CKP) sensor malfunction
- Faulty spark plug wires
- Faulty spark plugs

Downloaded from www.Manualslib.com manuals search engine

4. CHECK FUEL SYSTEM PRESSURE

- Release the fuel system pressure (See Fuel Pressure Relief Procedure in Section 04 Fuel Delivery).
- Check fuel system pressure (See Fuel Pressure Test in Section 04 Fuel Delivery).

Is fuel pressure correct?

Yes >> Go to the next step.

No >> If the fuel pressure is greater than 400 kPa (4.0 bar):
– Replace the fuel pressure regulator.
If the fuel pressure is less than 400 kPa (4.0 bar):
– Check the fuel supply system for restrictions or leaks.
– If no problems, repair or replace fuel filter, pressure regulator or fuel pump assembly.

5. CHECK EXHAUST SYSTEM

- Check the exhaust system for restrictions.

Is there a restriction in the exhaust system?

Yes >> Repair as necessary.

No >> Go to the next step.

6. CHECK ENGINE OVERHEATING

- Is the engine overheating (hot start concern only)?

For hot start concerns, does engine appear to be overheating?

Yes >> Repair the engine cooling system.

No >> Go to the next step.

7. CHECK POSITIVE CRANKCASE VENTILATION (PCV) SYSTEM

- Remove the PCV valve and shake it.

Does PCV valve rattle?

Yes >> Go to the next step.

No >> Replace the PCV valve.

Downloaded from www.Manualslib.com manuals search engine

8. CHECK EVAPORATIVE EMISSIONS (EVAP) SYSTEM

- Disconnect the canister control valve (1) hose.
- Place a stiff piece of paper over the hose end and start the engine.

Does vacuum hold the paper?

Yes >> Check for a vacuum leak in EVAP system (refer to EVAP system) and refer to EVAP control circuit relative DTC.

No >> Go to the next step.

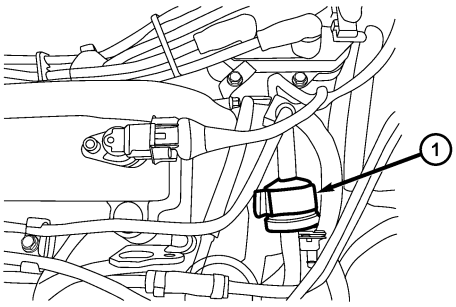

vismd030007

9. CHECK INTAKE AIR SYSTEM

- Check for MAP/MAF sensor.

Is there any contamination?

Yes >> Install a new MAF/IAT or MAP/IAT sensor.

No >> See Diagnostic Help for additional information.

Downloaded from www.Manualslib.com manuals search engine

Fast Idle

The following conditions apply to this symptom:

- The engine idles at a higher than recommended speed.

1. VERIFY ENGINE OPERATES AT NORMAL OPERATING TEMPERATURE

- Check the engine operating temperature.

Does the engine appear to be either overheating or not reaching normal operating temperature?

Yes >> Repair the engine cooling system.

No >> Go to the next step.

2. PRELIMINARY CHECKS

- Carry out the following preliminary checks:
  - Vacuum leaks
  - Throttle plate and linkage
  - Intake air tube (leaks)
  - Correct sealing of intake manifold and components attached to intake air tube

Are all checks OK?

Yes >> Go to the next step.

No >> Repair as necessary.
Verify the symptom no longer exists.

3. CHECK ECM DTC

- Turn the ignition switch on.
- With the scan tool X-431, select view DTC and data stream in ECM.

Are there any DTCs present?

Yes >> See the Diagnostic Trouble Code (DTC) List.
Go to the specific diagnostic test to troubleshoot the DTC.

No >> See Diagnostic Help for additional information.

Downloaded from www.Manualslib.com manuals search engine

Lack / Loss Of Power

The following conditions apply to this symptom:

- The engine has poor performance.
- The engine has poor acceleration.

1. PRELIMINARY CHECKS

- Verify symptom is reported under normal driving conditions without excessive engine/vehicle load conditions.
- Carry out the following preliminary checks:
  - Fuel quality
  - Vacuum lines (check for damage and correct routing)
  - Intake air system (check for damaged tubes and dirty air filter)
  - Vehicle wiring (disconnected, corroded/damaged)
  - Throttle linkage
  - Radiator (obstructed)
  - Transaxle

NOTE :
Be aware of the over RPM limiting functions of the ECM.

Are all checks OK?

Yes >> Go to the next step.

No >> Repair as necessary.
Verify the symptom no longer exists.

2. CHECK ECM DTC

- Turn ignition switch on.
- With the scan tool X-431, read the DTC.

Do any DTC displayed on the scan tool?

Yes >> See the Diagnostic Trouble Code (DTC) List.
Go to the specific diagnostic test to troubleshoot the DTC.

No >> Go to the next step.

3. CHECK FUEL SYSTEM PRESSURE

- Release the fuel system pressure (See Fuel Pressure Relief Procedure in Section 04 Fuel Delivery).
- Check fuel system pressure (See Fuel Pressure Test in Section 04 Fuel Delivery).

Is fuel pressure correct?

Yes >> Go to the next step.

No >> If the fuel pressure is greater than 400 kPa (4.0 bar):
- Replace the fuel pressure regulator.

If the fuel pressure is less than 400 kPa (4.0 bar):
- Check the fuel supply system for restrictions or leaks.
- If no problems, repair or replace fuel filter, pressure regulator or fuel pump assembly.

Downloaded from www.Manualslib.com manuals search engine

4. CHECK SECONDARY IGNITION SYSTEM

- Perform the following to test the secondary ignition system:
  - Disconnect the injector fuse.
  - Remove any of the 4 spark plugs.
  - Connect the spark plug to spark plug wire.
  - Ground the spark plug on the cylinder block.
  - Crank the engine to test the secondary ignition system with the spark plugs removed.

Is a strong blue spark visible at each spark plug while cranking the engine?

Yes >> Go to the next step.

No >> Check Camshaft Position (CMP) sensor signal at ECM.
If CMP sensor is OK, check the following:
- Crankshaft Position (CKP) sensor malfunction
- Spark plug wires
- Spark plugs

5. CHECK INTAKE AIR SYSTEM

- Check for MAP/MAF sensor.

Is there any contamination?

Yes >> Clean or replace the sensor.

No >> Go to the next step.

6. CHECK EXHAUST SYSTEM

- Check the exhaust system for restrictions.

Is there a restriction in the exhaust system?

Yes >> Repair as necessary.

No >> Go to the next step.

7. CHECK BASE ENGINE CONCERNS

- Check for base engine concerns (such as improper compression, worn camshaft/valve train, gasket leaks).

Is a fault indicated?

Yes >> Repair as necessary.

No >> Go to the next step.

8. CHECK AUTOMATIC/MANUAL TRANSAXLE OPERATION

- Check the operation of the transaxle.

Is the transaxle operation normal?

Yes >> Go to the next step.

No >> Repair as necessary.

Downloaded from www.Manualslib.com manuals search engine

9. CHECK FOR BRAKE SYSTEM CONCERNS

- Check the operation of the brakes.

Is a fault indicated?

Yes >> Repair as necessary.

No >> Go to the next step.

10. ADDITIONAL CHECKS

- Check the following for possible additional causes:
  - Customer driving habits (such as excessive loads or over RPM limiting functions enabled).
  - Clutch.
  - Charging system.
  - Ignition base timing (if not previously checked).
- If the base timing is not correct, align the engine timing belt (See Engine Timing Belt Removal & Installation in 02 Engine).

Are all checks OK?

Yes >> See Diagnostic Help for additional information.

No >> Repair as necessary.
Verify the symptom no longer exists.

Downloaded from www.Manualslib.com manuals search engine

Back Fires

The following conditions apply to this symptom:

- The engine will back fire when operated.
- The engine back fire occurs at all operating parameters.

1. PRELIMINARY CHECKS

- Carry out the following preliminary checks:
  - Vacuum lines (check for damage and correct routing).
  - Spark plug wire routing (correct firing order).

Are all checks OK?

Yes >> Go to the next step.

No >> Repair as necessary.
Verify the symptom no longer exists.

2. CHECK ECM DTC

- Turn the ignition switch on.
- With the scan tool X-431, select view DTC and stream data in ECM.

Are there any DTCs present?

Yes >> See the Diagnostic Trouble Code (DTC) List.
Go to the specific diagnostic test to troubleshoot the DTC.

No >> Go to the next step.

3. CHECK SECONDARY IGNITION SYSTEM

- Perform the following to test the secondary ignition system:
  - Disconnect the injector fuse.
  - Remove any of the 4 spark plugs.
  - Connect the spark plug to spark plug wire.
  - Ground the spark plug on the cylinder block.
  - Crank the engine to test the secondary ignition system with the spark plugs removed.

Is a strong blue spark visible at each spark plug while cranking the engine?

Yes >> Go to the next step.

No >> Check Camshaft Position (CMP) sensor signal at ECM.
If CMP sensor is OK, check the following:
- Crankshaft Position (CKP) sensor malfunction
- Spark plug wires
- Spark plugs

4. CHECK FUEL QUALITY

- Check fuel quality (concerns such as correct octane, contamination).

Is the fuel quality OK?

Yes >> Go to the next step.

No >> Repair as necessary.
Verify the symptom no longer exists.

Downloaded from www.Manualslib.com manuals search engine

5. CHECK KNOCK SENSOR

- Check knock sensor.

Is the check result normal?

Yes >> Go to the next step.

No >> Repair as necessary.
Verify the symptom no longer exists.

6. CHECK TIMING

- Check for the timing misalignment.

Is the check result normal?

Yes >> Go to the next step.

No >> Align the engine timing belt (See Engine Timing Belt Removal & Installation in Section 02 Engine).

7. CHECK FUEL SYSTEM PRESSURE

- Release the fuel system pressure (See Fuel Pressure Relief Procedure in Section 04 Fuel Delivery).
- Check fuel system pressure (See Fuel Pressure Test in Section 04 Fuel Delivery).

Is fuel pressure correct?

Yes >> Go to the next step.

No >> If the fuel pressure is greater than 400 kPa (4.0 bar):
– Replace the fuel pressure regulator.
If the fuel pressure is less than 400 kPa (4.0 bar):
– Check the fuel supply system for restrictions or leaks.
– If no problems, repair or replace fuel filter, pressure regulator or fuel pump assembly.

8. CHECK FOR BASE ENGINE CONCERNS

- Check for base engine concerns (such as improper cylinder compression, worn camshaft/valve train, gasket leaks).

Is a fault indicated?

Yes >> Repair as necessary.

No >> See Diagnostic Help for additional information.

Downloaded from www.Manualslib.com manuals search engine

Engine Poor Driveability

The following conditions apply to this symptom:

- Engine stalls/quits, engine runs rough, misses, buck/jerk, hesitation/stumble acceleration, surges, rolling idle.
- Engine stops unexpectedly at beginning of acceleration or during acceleration.
- Engine stops unexpectedly while cruising.
- Engine speed fluctuates during acceleration.
- Engine misses during acceleration.
- Vehicle bucks/jerks during acceleration, cruising or deceleration.
- Momentary pause during acceleration.
- Momentary minor loss in engine output.

1. PRELIMINARY CHECKS

NOTE :
Be aware of the over RPM limiting functions of the ECM.

- Carry out the following preliminary checks:
  - Fuel quality
  - Vacuum lines (check for damage and correct routing)
  - Intake air system (check for damaged tubes and dirty air filter)
  - Vehicle wiring (disconnected, corroded/damaged)
  - Throttle linkage.
  - Radiator (obstructed)
  - Transaxle

Are all checks OK?

Yes >> Go to the next step.

No >> Repair as necessary.
Verify the symptom no longer exists.

2. CHECK FOR STALL AT IDLE

- Check for engine stall at idle.

NOTE :
Confirm that proper vehicle maintenance has been performed before continuing with engine diagnosis.

- Inspect the following components:
  - Clean the injectors
  - Fuel filter
  - Intake air filter
  - Throttle body
  - Spark plugs
  - Spark plug wires

Does the engine now stall at idle?

Yes >> Repair as necessary.

No >> Go to the next step.

Downloaded from www.Manualslib.com manuals search engine

3. CHECK FOR ROUGH IDLE

- Check for engine rough idle.

NOTE :
Confirm that proper vehicle maintenance has been performed before continuing with engine diagnosis.
- Inspect the following components:
  - Clean the carbon deposit on intake and exhaust valves
  - Valve stem
  - Spark plugs
  - Throttle body
  - Spark plugs and combustion chamber

Does the engine idle rough?

Yes >> Repair as necessary.

No >> Go to the next step.

4. CHECK ECM DTC

- Turn the ignition switch on.
- With the scan tool X-431, read the DTC.

Are there any DTCs present?

Yes >> Repair as necessary.

No >> Go to the next step.

5. CHECK THE ELECTRONIC THROTTLE CONTROL (ETC) ACTUATOR

- Start engine and let idle.
- While checking for RPM drop or engine stall, disconnect ETC actuator connector.

Did RPM drop or engine stall when the ETC connector was disconnected?

Yes >> Connect ETC actuator connector.
Go to the next step.

No >> Repair as necessary.

Downloaded from www.Manualslib.com manuals search engine

6. CHECK SECONDARY IGNITION SYSTEM

- Perform the following to test the secondary ignition system:
  - Disconnect the injector fuse.
  - Remove any of the 4 spark plugs.
  - Connect the spark plug to spark plug wire.
  - Ground the spark plug on the cylinder block.
  - Crank the engine to test the secondary ignition system with the spark plugs removed.

Is a strong blue spark visible at each spark plug while cranking the engine?

Yes >> Go to the next step.

No >> Check Camshaft Position (CMP) sensor signal at ECM.
If CMP sensor is OK, check the following:
- Crankshaft Position (CKP) sensor malfunction
- Spark plug wires
- Spark plugs

7. CHECK FUEL SYSTEM PRESSURE

- Release the fuel system pressure (See Fuel Pressure Relief Procedure in Section 04 Fuel Delivery).
- Check fuel system pressure (See Fuel Pressure Test in Section 04 Fuel Delivery).

Is fuel pressure correct?

Yes >> Go to the next step.

No >> If the fuel pressure is greater than 400 kPa (4.0 bar):
- Replace the fuel pressure regulator.

If the fuel pressure is less than 400 kPa (4.0 bar):
- Check the fuel supply system for restrictions or leaks.
- If no problems, repair or replace fuel filter, pressure regulator or fuel pump assembly.

8. CHECK EXHAUST SYSTEM

- Check the exhaust system for restrictions.

Is there a restriction in the exhaust system?

Yes >> Repair as necessary.

No >> Go to the next step.

9. CHECK PCV SYSTEM

- Check the Positive Crankcase Ventilation (PCV) system.
- Remove PCV valve and shake it.

Is PCV valve normal?

Yes >> Go to the next step.

No >> Replace the PCV valve.

Downloaded from www.Manualslib.com manuals search engine

10. CHECK EVAPORATIVE EMISSIONS (EVAP) SYSTEM

- Disconnect the canister control valve (1) hose.
- Place a stiff piece of paper over the hose end, start engine.

Does vacuum hold the paper?

Yes >> Check for a vacuum leak in EVAP system (refer to EVAP system) and refer to EVAP control circuit relative DTC.

No >> Go to the next step.

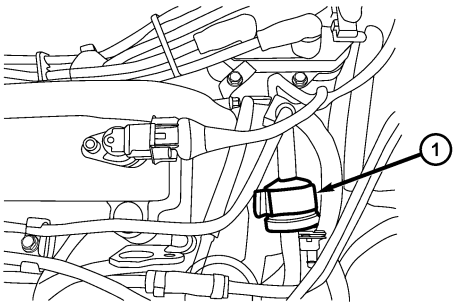

vismd030007

11. CHECK ENGINE CYLINDER COMPRESSION

- Check engine cylinder compression.
- Compression should not be less than 1,000 kPa, and not vary more than 25 percent from cylinder to cylinder.

Is engine compression correct?

Yes >> Go to the next step.

No >> Repair as necessary.

12. ADDITIONAL CHECKS

- Check the following for possible additional causes:
  - Driveline
  - Transaxle
  - Charging system
  - A/C system (for surge with A/C on)

Are the checks OK?

Yes >> See Diagnostic Help for additional information.

No >> Repair as necessary.

Downloaded from www.Manualslib.com manuals search engine

Low Idle / Stalls During Deceleration

The following conditions apply to this symptom:

- Engine stops unexpectedly at beginning of deceleration or recovery from deceleration.

1. PRELIMINARY CHECKS

- Carry out the following preliminary checks:
  - Vacuum lines (routing, leaks)
  - Intake air tubes
  - Wiring connections

Are all checks OK?

Yes >> Go to the next step.

No >> Repair as necessary.
Verify the symptom no longer exists.

2. CHECK FOR ROUGH OR STALL AT IDLE

- Check for rough idle or stall at idle.

NOTE :
Confirm that proper vehicle maintenance has been performed before continuing with engine diagnosis.

- Inspect the following components:
  - Clean the carbon deposit on intake and exhaust valves
  - Valve stem
  - Spark plugs and combustion chamber

Does the engine idle rough?

Yes >> Repair as necessary.

No >> Go to the next step.

3. CHECK ECM DTC

- Turn the ignition switch on.
- With the scan tool X-431, read the DTC.

Are there any DTCs present?

Yes >> Repair as necessary.

No >> Go to the next step.

4. CHECK THE ELECTRONIC THROTTLE CONTROL (ETC) ACTUATOR

- Start engine and let idle.
- Disconnect ETC actuator connector and check for RPM drop or engine stall.

Did RPM drop or engine stall when the ETC connector was disconnected?

Yes >> Connect ETC actuator connector.
Go to the next step.

No >> Repair as necessary.

Downloaded from www.Manualslib.com manuals search engine

5. CHECK CLUTCH OPERATION CONDITION

- Check clutch operation condition.

Is the transaxle clutch operation normal?

Yes >> Go to the next step.

No >> Repair as necessary.

6. CHECK A/C SYSTEM OPERATION

- Start engine.
- Cycle A/C switch from on to off (verify A/C clutch engages condition).
- Check the A/C system operation.

Does the A/C system operate normally?

Yes >> Go to the next step.

No >> Repair as necessary.

7. CHECK FUEL SYSTEM PRESSURE

- Release the fuel system pressure (See Fuel Pressure Relief Procedure in Section 04 Fuel Delivery).
- Check fuel system pressure (See Fuel Pressure Test in Section 04 Fuel Delivery).

Is fuel pressure correct?

Yes >> Go to the next step.

No >> If the fuel pressure is greater than 400 kPa (4.0 bar):
– Replace the fuel pressure regulator.
If the fuel pressure is less than 400 kPa (4.0 bar):
– Check the fuel supply system for restrictions or leaks.
– If no problems, repair or replace fuel filter, pressure regulator or fuel pump assembly.

8. CHECK FOR BASE ENGINE CONCERNS

- Check for base engine concerns (such as improper compression, worn camshaft/valve train, gasket leaks).

Is a fault indicated?

Yes >> Repair as necessary.

No >> See Diagnostic Help for additional information.

Downloaded from www.Manualslib.com manuals search engine

Idle Speed Slow Return To Normal Idle

The following conditions apply to this symptom:

- Slow return to idle.

1. PRELIMINARY CHECKS

- Carry out the following preliminary checks:
  - Vacuum leaks
  - Intake air system
  - Throttle body

Are all checks OK?

Yes >> Go to the next step.

No >> Repair as necessary.
Verify the symptom no longer exists.

2. CHECK ECM DTC

- Turn the ignition switch on.
- With the scan tool X-431, read the DTC.

Are there any DTCs present?

Yes >> Repair as necessary.

No >> Go to the next step.

3. CHECK PCV VALVE

- Remove Positive Crankcase Ventilation (PCV) valve and shake it.

Does PCV valve rattle?

Yes >> Install PCV valve, go to the next step.

No >> Replace the PCV valve.

4. CHECK PCV SYSTEM

- Start engine and bring to normal operating temperature. Disconnect crankcase ventilation hose from PCV valve. Place a stiff piece of paper over the hose. Wait 1 minute.

Does vacuum hold paper in place?

Yes >> Verify test results. If OK, see diagnostic index to repair any additional symptom.

No >> Check for vacuum leaks, obstructions in the PCV system, oil cap, PCV valve, rocker cover bolt torque/gasket leak. Repair as necessary.

Downloaded from www.Manualslib.com manuals search engine

IGNITION CONTROL

GENERAL INFORMATION 03-566
- Description 03-566
- Operation 03-566
- Specifications 03-566
- Special Tools 03-567
- Electrical Schematics 03-568

ON-VEHICLE SERVICE 03-571

Ignition Coil 1.6L & 1.8L & 2.0L 03-571
- Description 03-571
- Operation 03-571
- Removal & Installation 03-571

Ignition Coil 2.4L 03-572
- Description 03-572
- Operation 03-572
- Removal & Installation 03-572

Spark Plug Wire 1.6L & 1.8L & 2.0L 03-573
- Removal & Installation 03-573

Spark Plug Wire 2.4L 03-574
- Removal & Installation 03-574

Spark Plug 1.6L & 1.8L & 2.0L 03-574
- Removal & Installation 03-574

Spark Plug 2.4L 03-575
- Removal & Installation 03-575

Downloaded from www.Manualslib.com manuals search engine

GENERAL INFORMATION

Description

The electronic ignition system consists of the following components:
- Engine Control Module (ECM)
- Ignition Coil
- Spark Plugs
- Spark Plug Wires
- Camshaft Position (CMP) Sensor
- Crankshaft Position (CKP) Sensor

Operation

The ignition system utilizes a split ignition coil which supplies secondary voltage to two cylinders. When the ignition coil discharges, two spark plugs fire at the same time. The Engine Control Module (ECM) uses inputs from the Crankshaft Position (CKP) Sensor to determine the Top Dead Center (TDC) position of the piston for cylinder number one, and the Camshaft Position (CMP) Sensor to determine which ignition coil to energize.

Specifications

Torque Specifications

DESCRIPTION	TORQUE (N·m)
Spark Plugs	30
Ignition Coil Bolts	6

Spark Plug Specifications

DESCRIPTION	GAP
FR7DTC	0.7 mm - 1.1 mm

Downloaded from www.Manualslib.com manuals search engine

Special Tools

Diagnostic Scan Tool X-431	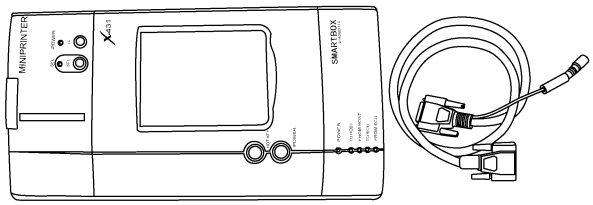
Engine Analyzer KES-200	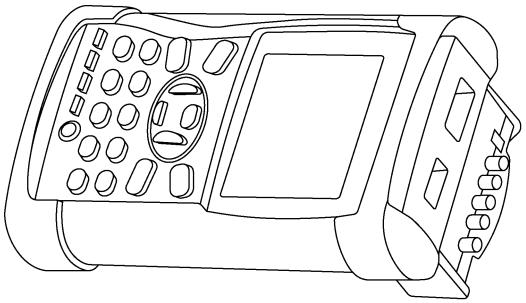

Downloaded from www.Manualslib.com manuals search engine

Electrical Schematics

Ignition Control System - 1.6L / 1.8L (Page 1 of 1)

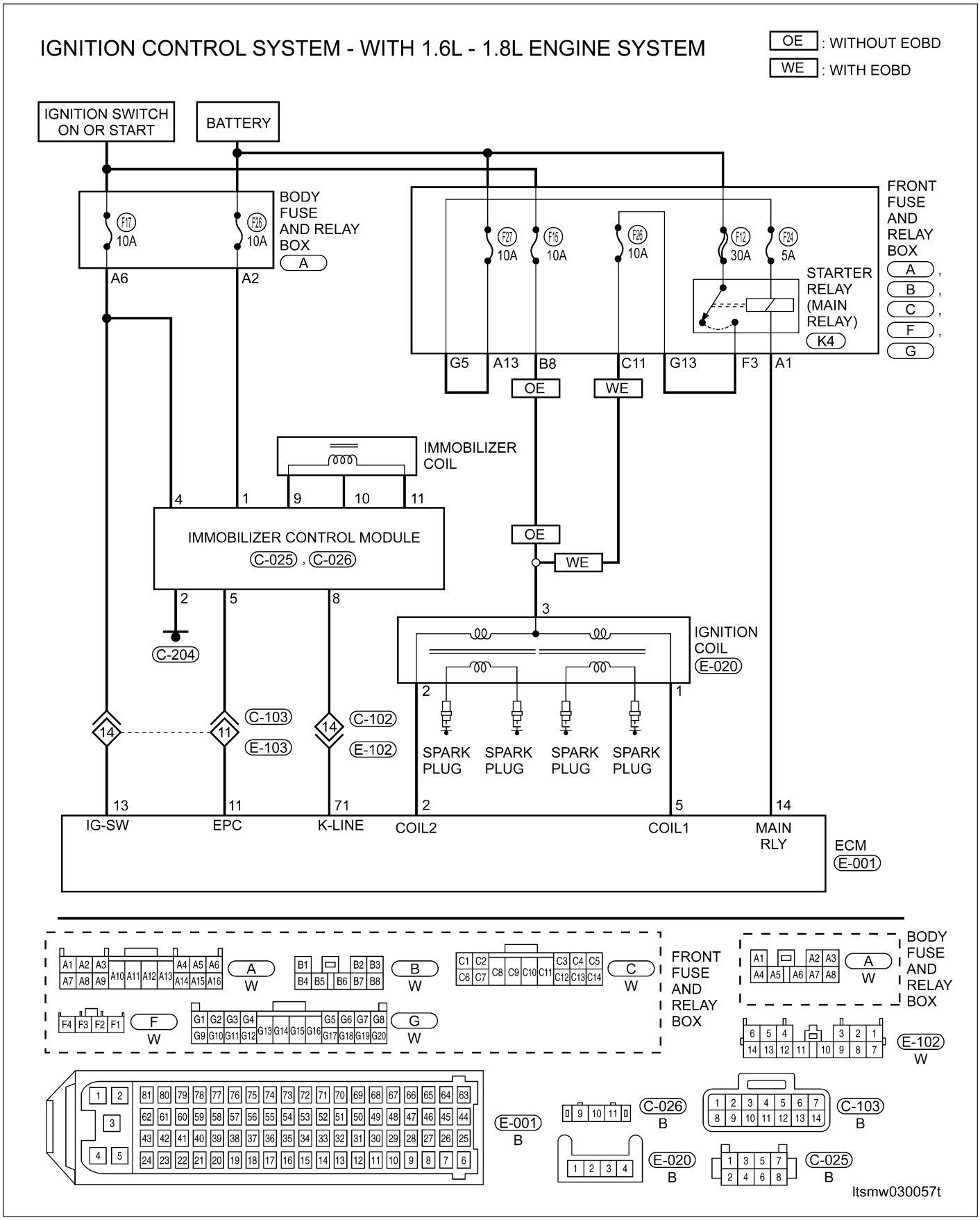

Downloaded from www.Manualslib.com manuals search engine

Ignition Control System - 2.0L (Page 1 of 1)

IGNITION CONTROL SYSTEM - WITH 2.0L ENGINE SYSTEM

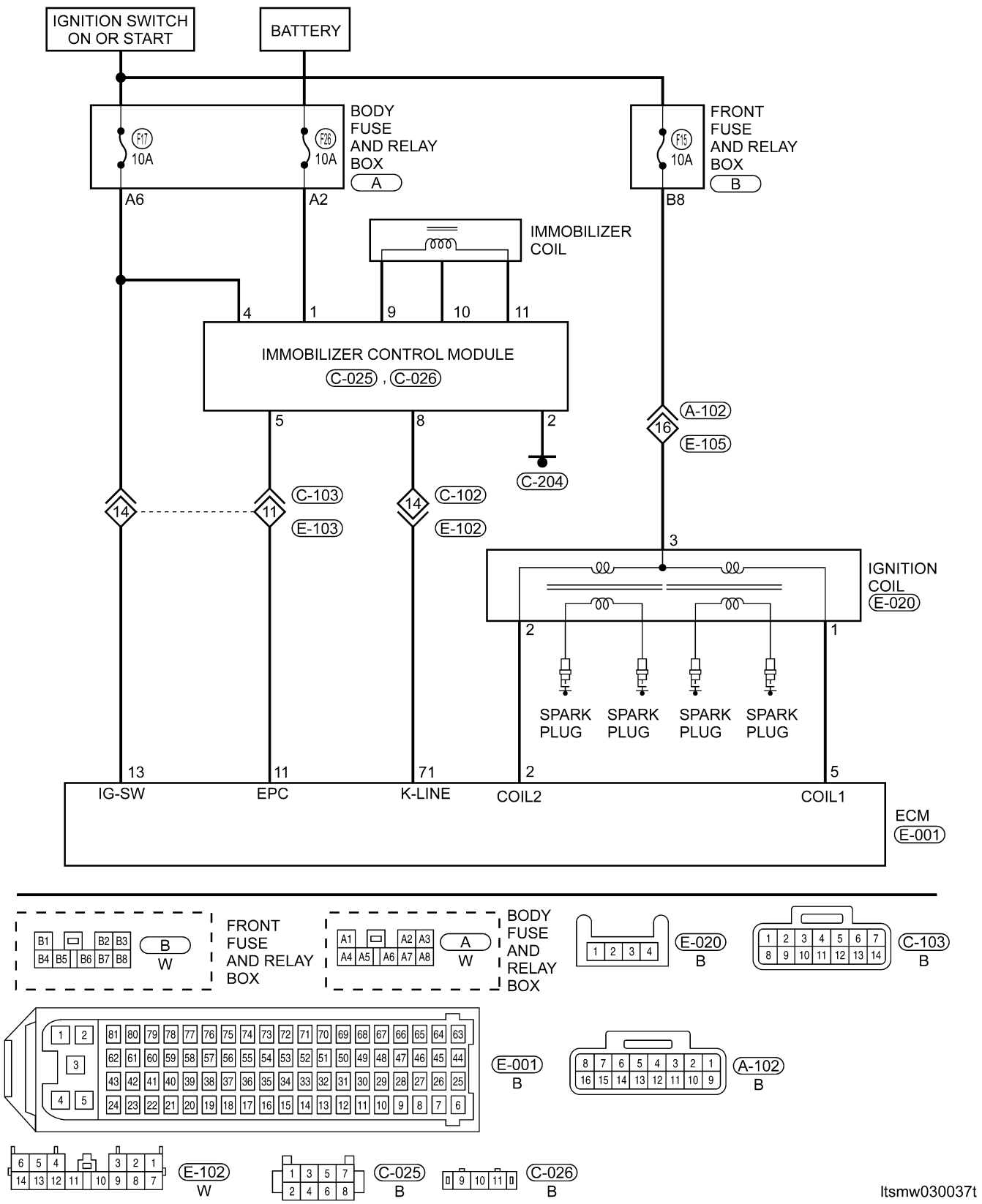

Downloaded from www.Manualslib.com manuals search engine

Ignition Control System - 2.4L (Page 1 of 1)

IGNITION CONTROL SYSTEM - WITH 2.4L ENGINE SYSTEM

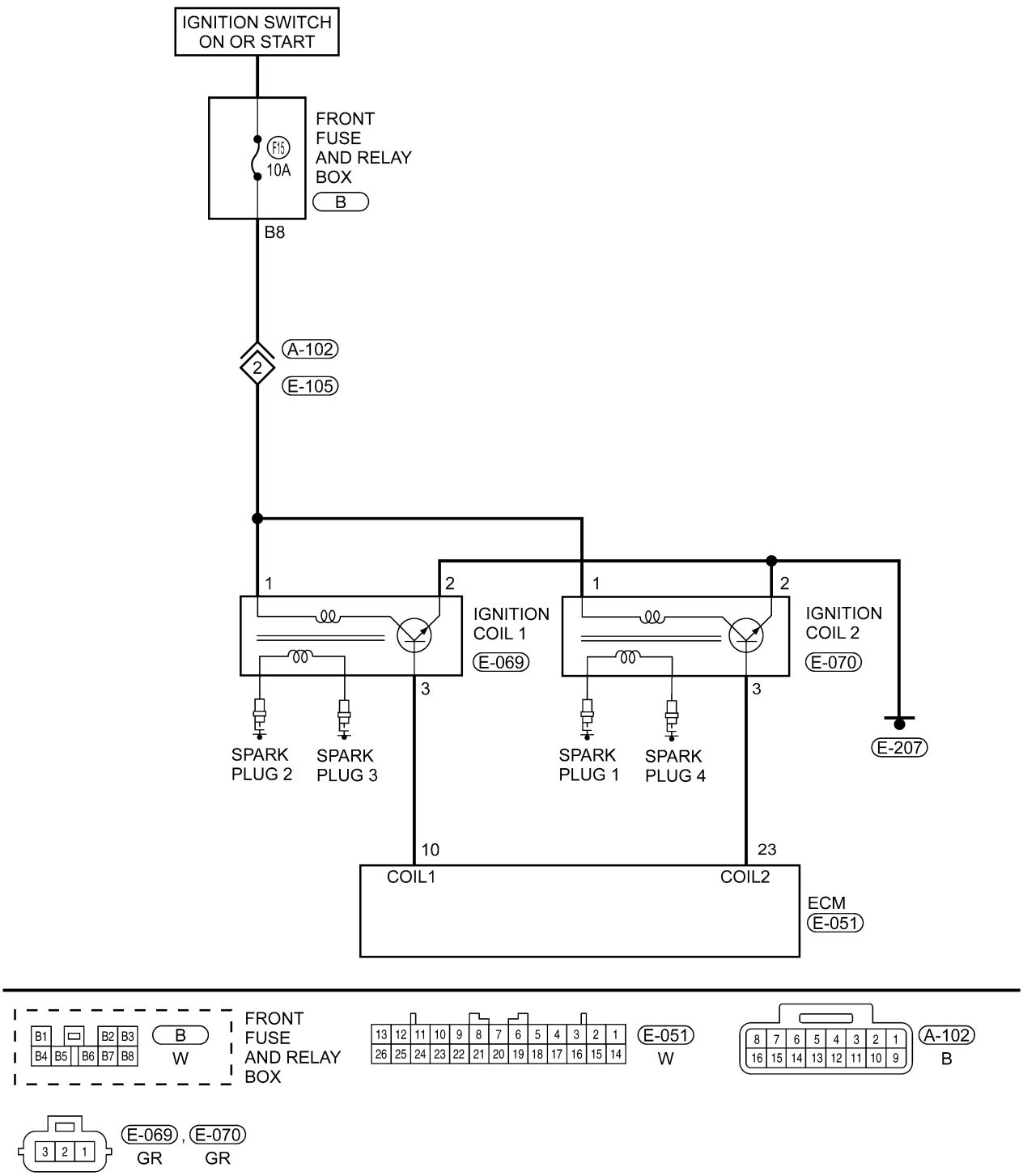

ltsmw030007t

Downloaded from www.Manualslib.com manuals search engine

ON-VEHICLE SERVICE

Ignition Coil 1.6L & 1.8L & 2.0L

Description

The ignition coil consists of primary and secondary groups of wire. The primary wire is located on one end of the coil. One end of the wire is connected to power and the other end is connected to the Engine Control Module (ECM). The secondary coil connects two spark plugs. They form a loop and provide high-voltage output.

Operation

When the primary wire is connected to power, current will flow causing a strong magnetic field to form. When the primary wire is disconnected, the magnetic field will collapse into the secondary wire causing very high voltage output.

Removal & Installation

1. Remove the engine cover.
2. Disconnect the negative battery cable.
3. Disconnect the ignition coil electrical connector.
4. Twist the spark plug wires (1) from the ignition coil and remove the four spark plug wires.

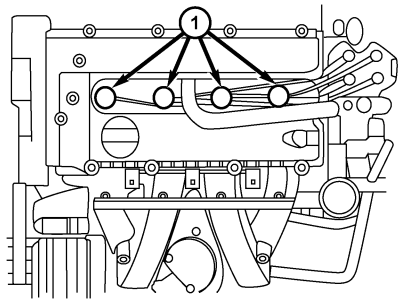

besm030028

Downloaded from www.Manualslib.com manuals search engine

5. Remove the 4 ignition coil retaining bolts (1).
   (Tighten: Ignition coil retaining bolts to 6 N·m)

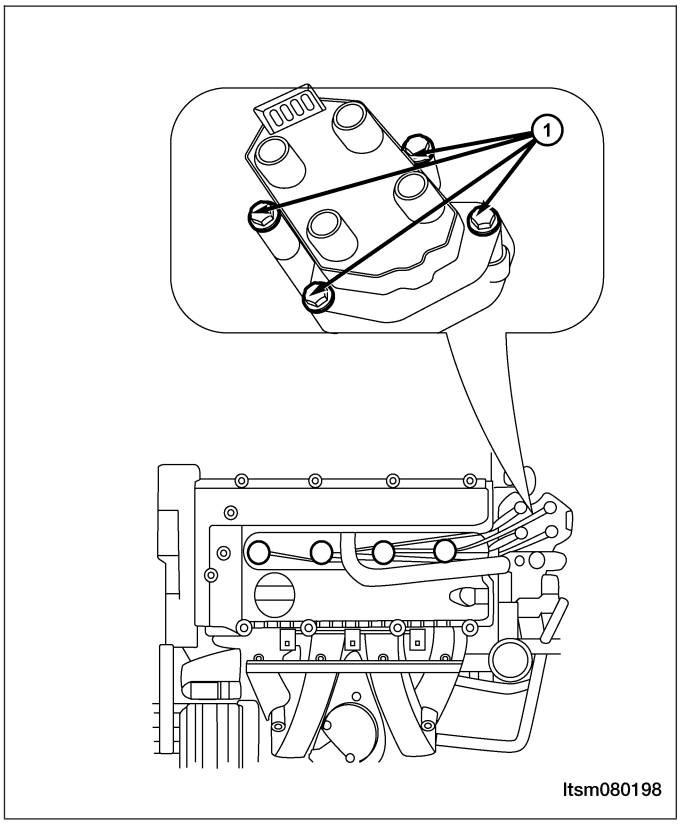

6. Remove the ignition coil.
7. Installation is in the reverse order of removal.

Ignition Coil 2.4L

Description

The ignition coil consists of primary and secondary groups of wire. The primary wire is located on one end of the coil. One end of the wire is connected to power and the other end is connected to the Engine Control Module (ECM). The secondary coil connects two spark plugs. They form a loop and provide high-voltage output.

Operation

When the primary wire is connected to power, current will flow causing a strong magnetic field to form. When the primary wire is disconnected, the magnetic field will collapse into the secondary wire causing very high voltage output.

Removal & Installation

1. Disconnect the negative battery cable.
2. Disconnect the ignition coil connector.
3. Twist the spark plug wire from ignition coils.
4. Remove the ignition coil retaining bolts (2).
   (Tighten: Ignition coils retaining bolt to 12 N·m)
5. Remove the ignition coils & spark plug wire assembly (1).

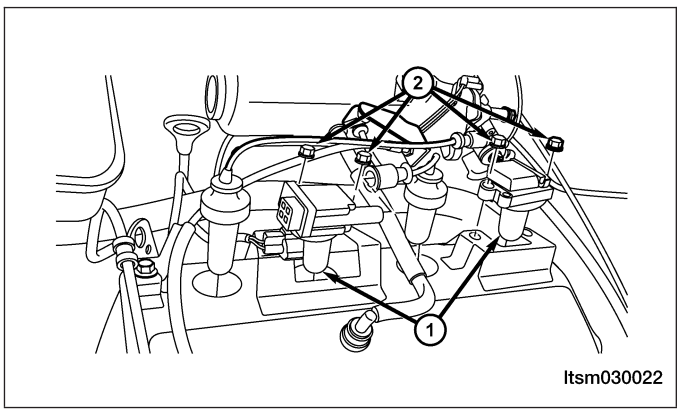

6. Installation is in the reverse order of removal.

Downloaded from www.Manualslib.com manuals search engine

Spark Plug Wire 1.6L & 1.8L & 2.0L

Removal & Installation

1. Remove the engine cover.
2. Disconnect the negative battery cable.
3. Remove the hose (1), if necessary.
4. Disconnect the ignition coil electrical connector (2).
5. Twist the spark plug wire (3) from ignition coil and remove the spark plug wire.
6. Twist the spark plug wire (3) from spark plug then pull the spark plug wire straight up.

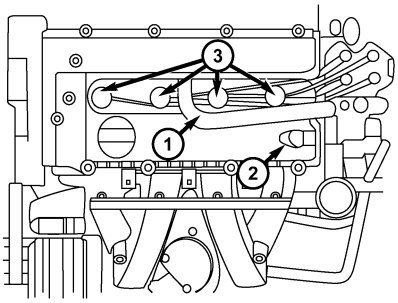

besm020022

7. Remove the spark plug wire (1).
8. Installation is in the reverse order of removal.

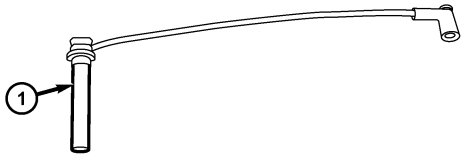

besm030013

Cylinder Number	1	2	3	4
Part Number	A11-3707130HA	A11-3707140HA	A11-3707150HA	A11-3707160HA
Length (mm)	405	275	165	125
Resistance (KΩ)	6.99 - 12.08	5.32 - 9.59	3.92 - 7.48	3.4 - 6.71

Downloaded from www.Manualslib.com manuals search engine

Spark Plug Wire 2.4L

Removal & Installation

1. Disconnect the negative battery cable.
2. Twist the spark plug wire (1) from ignition coils
3. Twist the ignition coils & spark plug wire assembly (2) from spark plug then pull straight up.

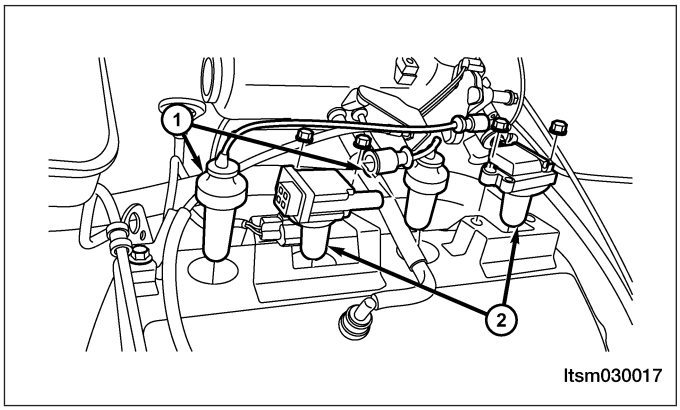

4. Remove the ignition coils & spark plug wire assembly (1).

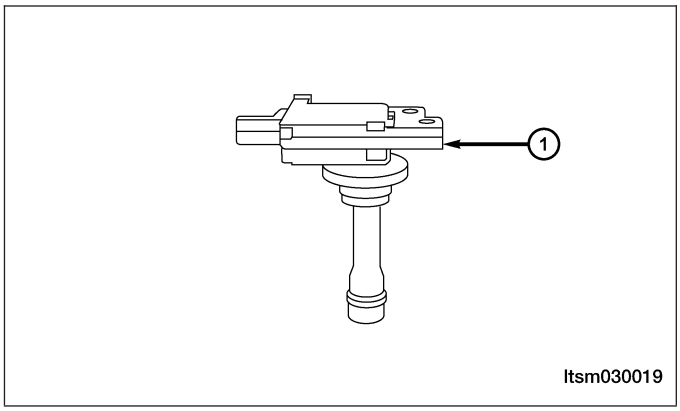

5. Installation is in the reverse order of removal.

Spark Plug 1.6L & 1.8L & 2.0L

Removal & Installation

1. Remove the engine cover.
2. Disconnect the negative battery cable.
3. Remove the hose (1), if necessary.
4. Twist the spark plug wire (3) from spark plug then pull the spark plug wire straight up.

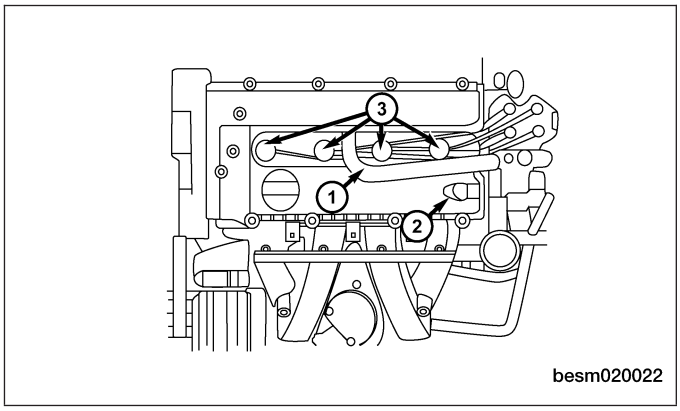

Downloaded from www.Manualslib.com manuals search engine

5. Remove the spark plug.
   (Tighten: Spark plugs to 30 N·m)
6. Inspect the spark plug condition.
7. Installation is in the reverse order of removal.

Installation Notes:

- Verify the proper spark plug gap before installing spark plugs.

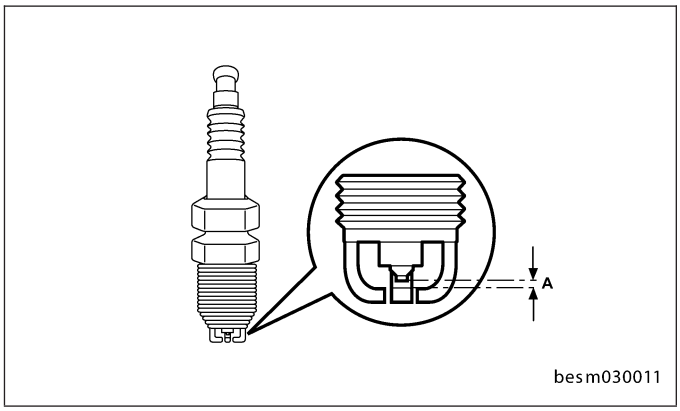

Spark Plug 2.4L

Removal & Installation

1. Disconnect the negative battery cable.
2. Twist the spark plug wire from spark plug then pull straight up.
3. Remove the ignition coils retaining bolts (2).
4. Remove ignition coils (1).

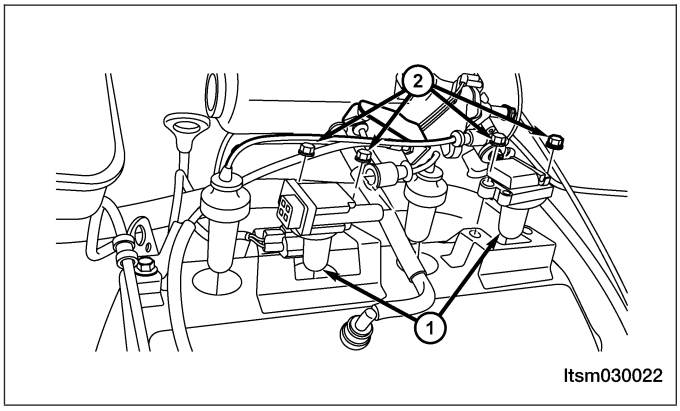

5. Remove the spark plug using a quality socket with a rubber or foam insert.
   (Tighten: Spark plug to 45 N·m)
6. Inspect the spark plug condition.
7. Installation is in the reverse order of removal.

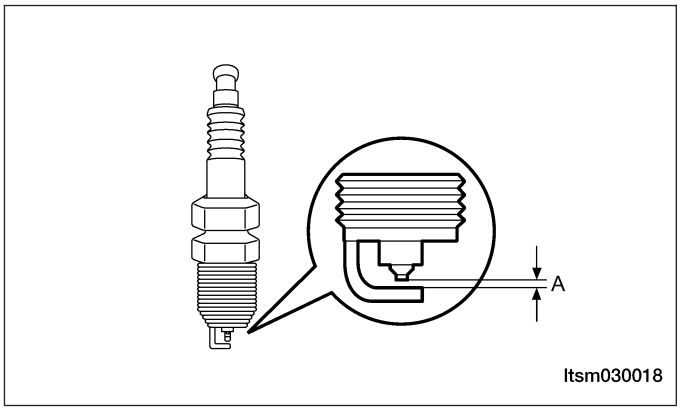

Downloaded from www.Manualslib.com manuals search engine

EVAPORATIVE EMISSIONS

GENERAL INFORMATION 03-577
Description 03-577
Operation 03-577
Electrical Schematics 03-579
Specifications 03-583
Special Tools 03-583

ON-VEHICLE SERVICE 03-584

Canister Control Valve 1.6L & 1.8L & 2.0L 03-584
Description 03-584
Operation 03-584
Removal & Installation 03-584

Canister Control Solenoid Valve 2.4L 03-584
Description 03-584
Operation 03-584
Removal & Installation 03-585

Vapor Canister 1.6L & 1.8L & 2.0L 03-585
Description 03-585
Operation 03-585
Removal & Installation 03-585

Vapor Canister 2.4L 03-586
Description 03-586
Operation 03-586
Removal & Installation 03-586

EGR Control Solenoid Valve 2.4L 03-587
Removal & Installation 03-587

EGR Valve 2.4L 03-588
Description 03-588
Operation 03-588
Removal & Installation 03-589

Downloaded from www.Manualslib.com manuals search engine

Description

The evaporation control system prevents the emission of fuel tank vapors into the atmosphere. When fuel evaporates in the fuel tank, the vapors pass through vent hoses or tubes to an activated carbon filled evaporative canister. The canister temporarily holds the vapors. The Engine Control Module (ECM) allows intake manifold vacuum to draw vapors into the combustion chambers during certain operating conditions.

Operation

1.6L / 1.8L / 2.0L

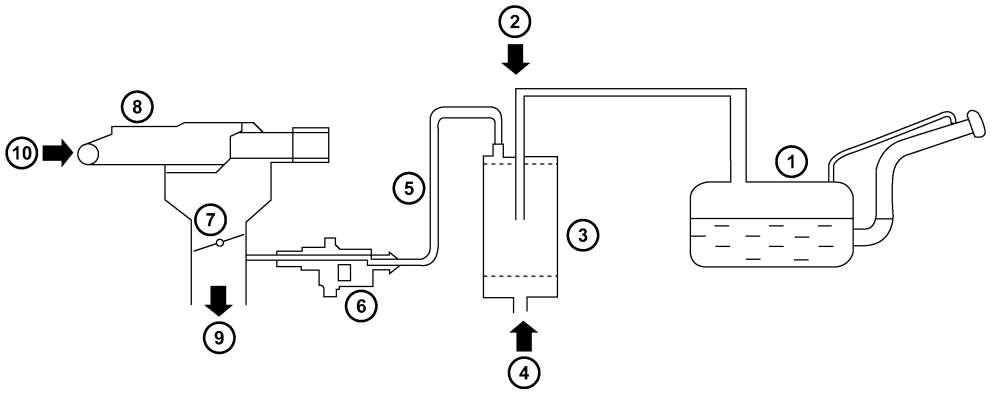

besm030026

1-Fuel Tank	2-Fuel Vapor
3-Canister	4-Air Intake
5-Hose	6-Canister Control Valve

7-Throttle Valve	8-Air Filter Assembly
9-To Engine	10-Air Intake

Downloaded from www.Manualslib.com manuals search engine

2.4L

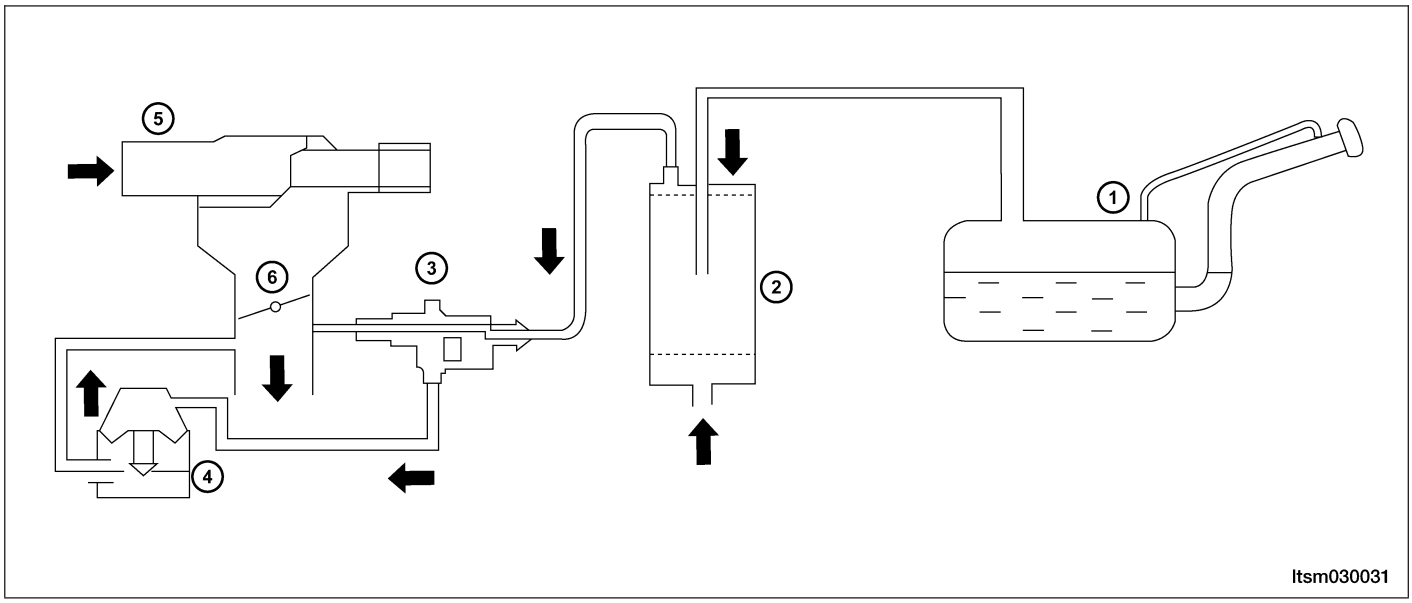

1 - Fuel Tank	2 - Canister
3 - Canister Control Valve	4 - EGR Valve

5 - Air Filter Assembly	6 - Throttle Valve

The ECM will only energize the solenoid when the engine is at operating temperature, but will de-energize it during periods of deceleration. When de-energized, no vapors are purged. The pulse-width modulated canister control valve modulates the fuel vapor purge rate from the vapor canister and fuel tank to the engine intake manifold.

Downloaded from www.Manualslib.com manuals search engine

Electrical Schematics

Canister Control Valve 1.6L /1.8L

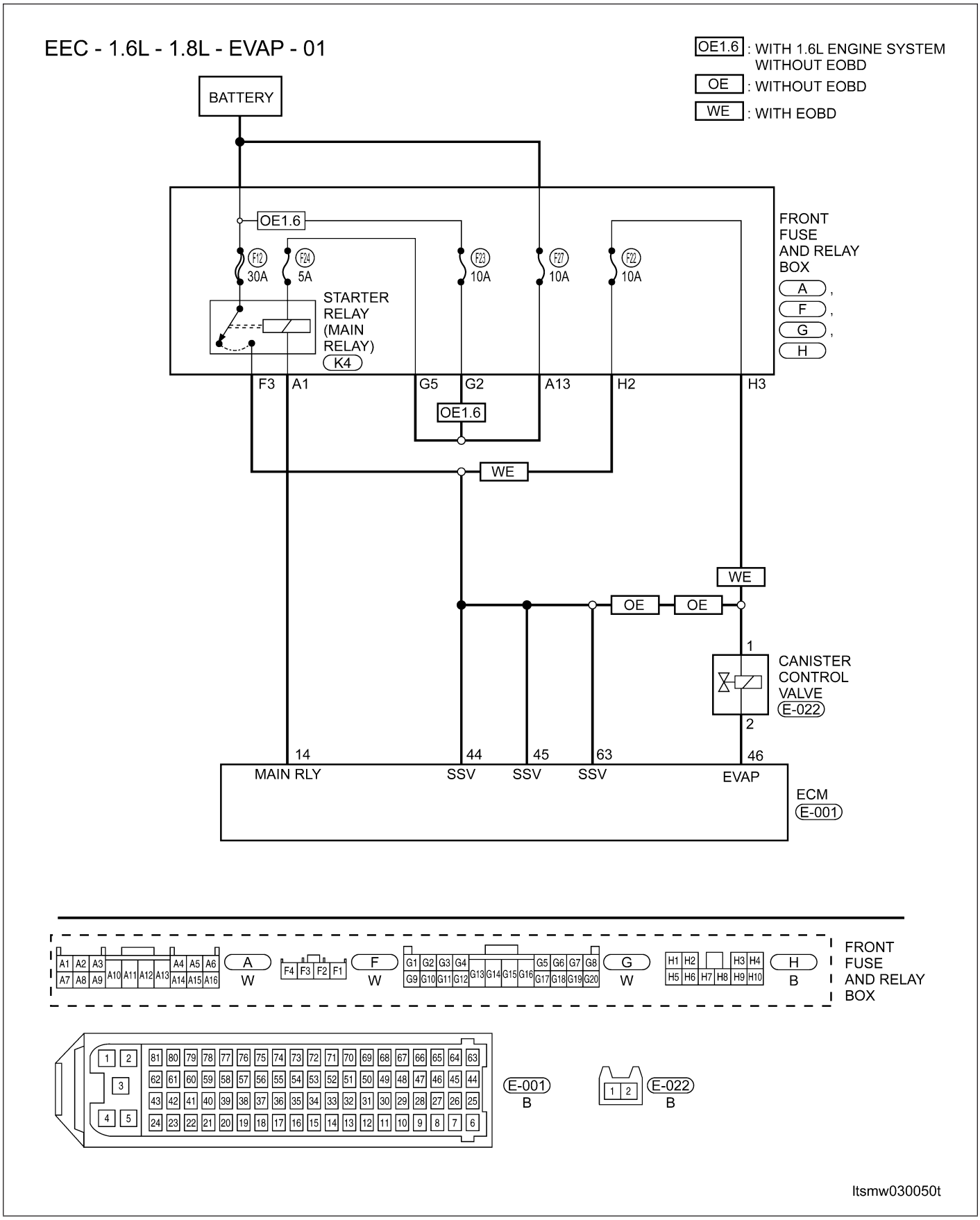

Downloaded from www.Manualslib.com manuals search engine

Canister Control Valve 2.0L

EEC - 2.0L - EVAP - 01

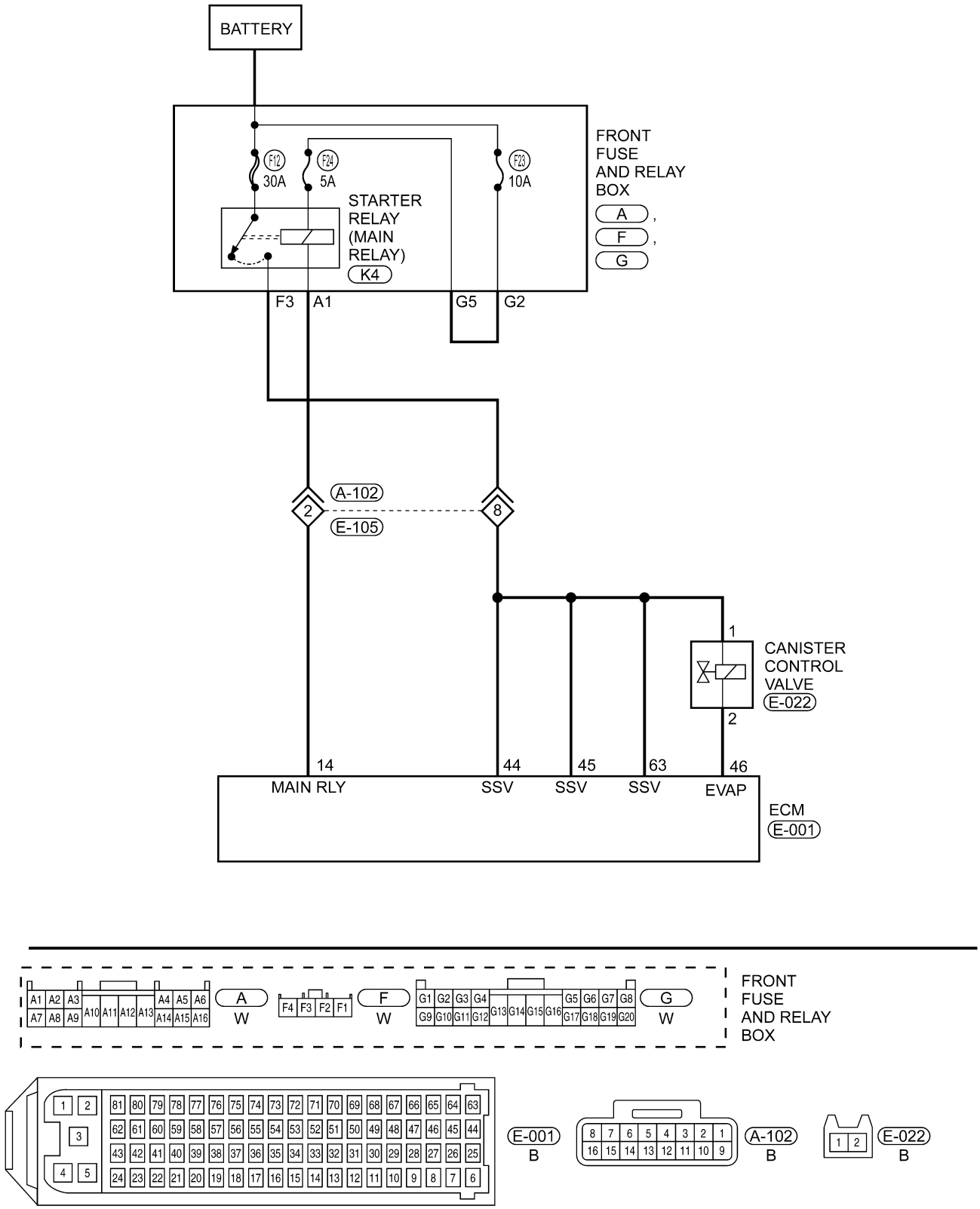

ltsmw030031t

Downloaded from www.Manualslib.com manuals search engine

Canister Control Valve 2.4L

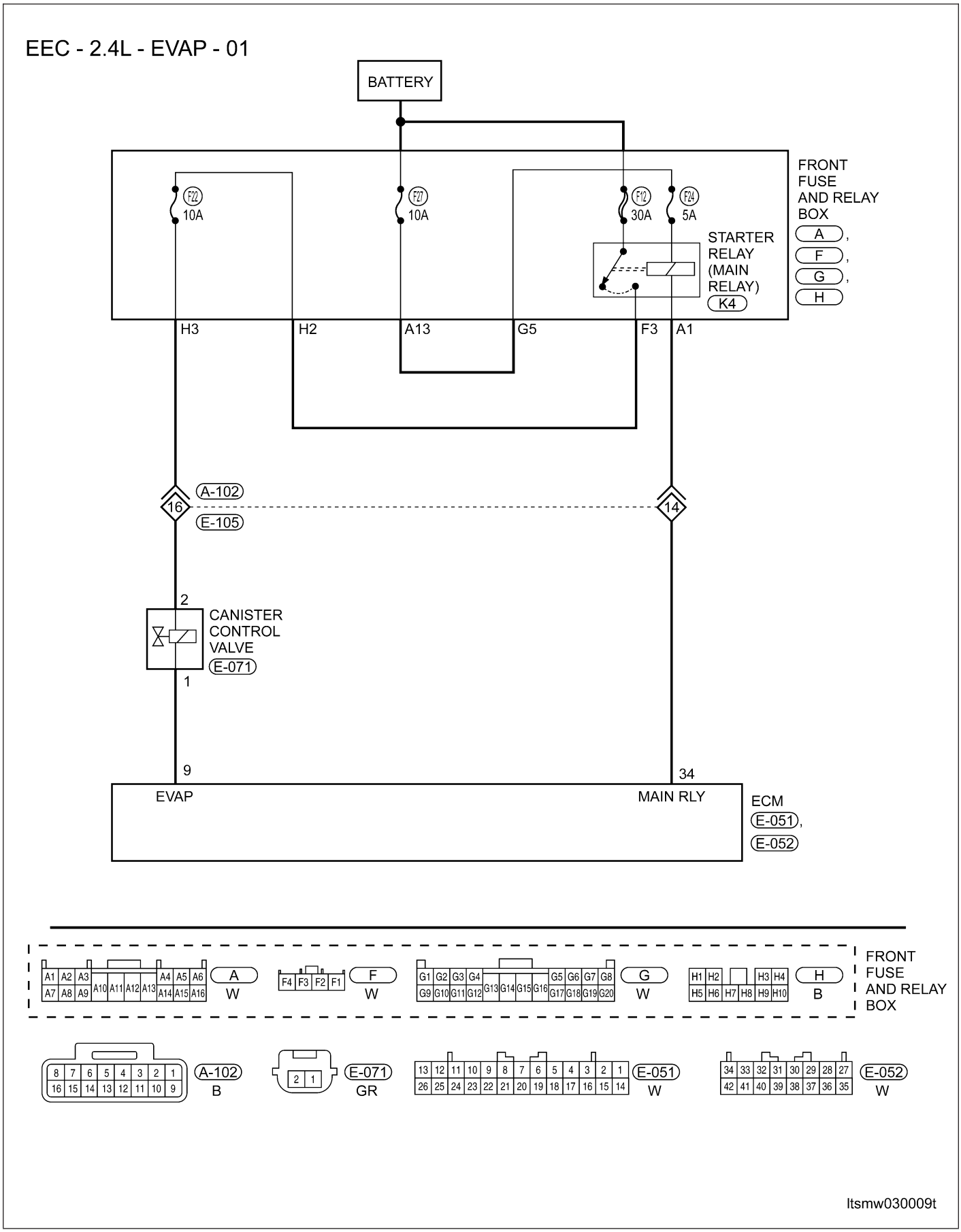

Downloaded from www.Manualslib.com manuals search engine

EGR Control Solenoid Valve 2.4L

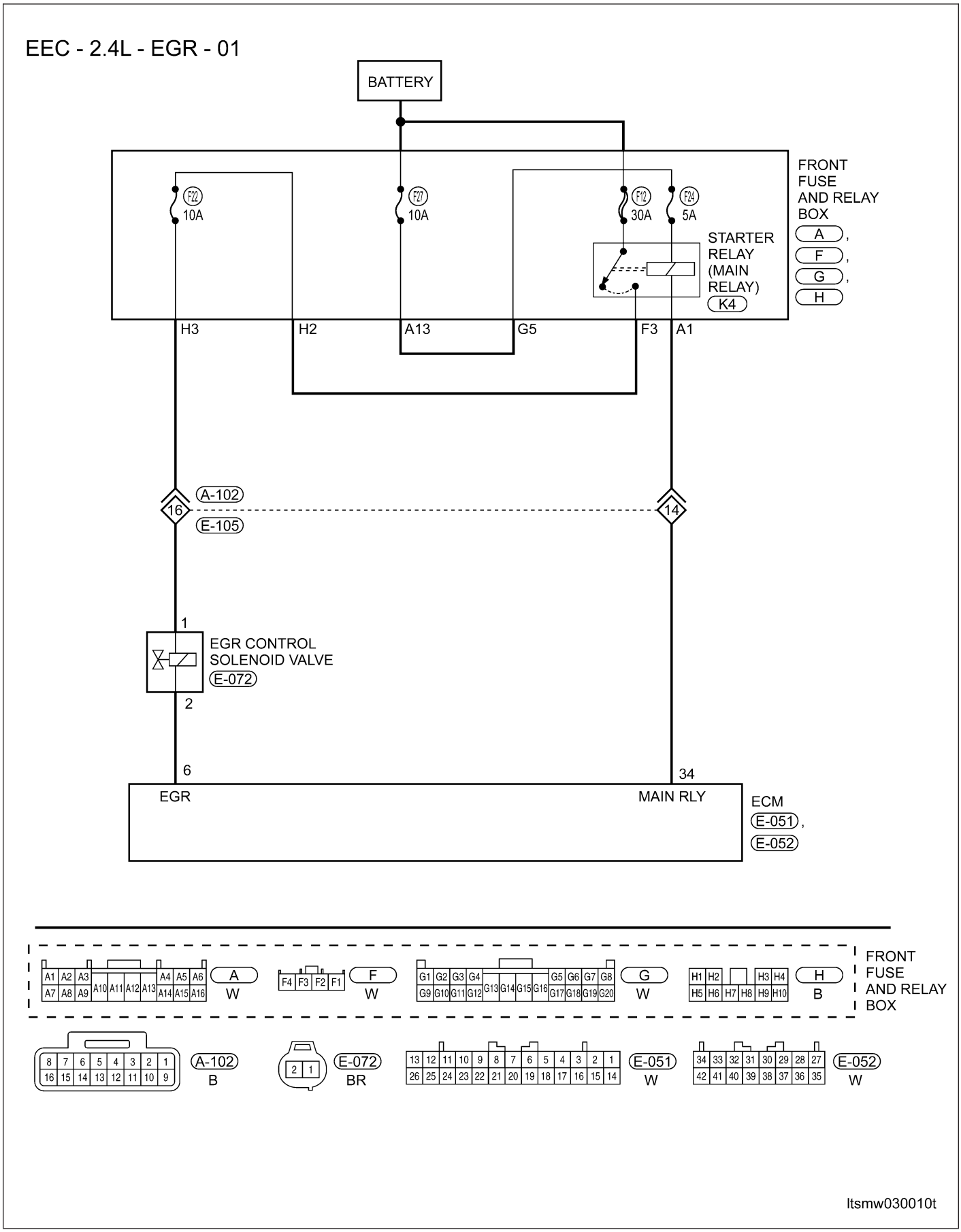

Downloaded from www.Manualslib.com manuals search engine

Specifications

Torque Specifications

DESCRIPTION	TORQUE (N·m)
Vapor Canister Bolts	10

Special Tools

Diagnostic Scan Tool X-431	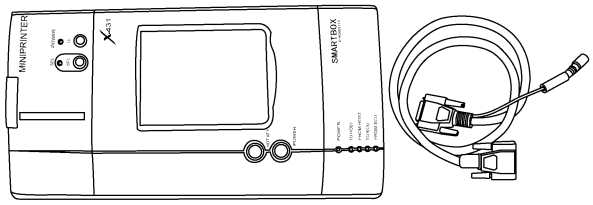
Engine Analyzer KES-200	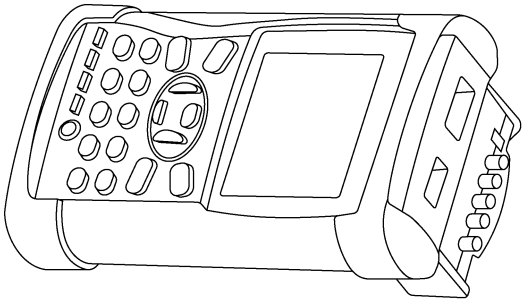

Downloaded from www.Manualslib.com manuals search engine

ON-VEHICLE SERVICE

Canister Control Valve 1.6L & 1.8L & 2.0L

Description

This vehicle uses a pulse-width modulated canister control valve. The canister control valve regulates the rate of vapor flow from the vapor canister to the throttle body. The Engine Control Module (ECM) controls the frequency at which the canister control valve operates in order to accommodate the vapor volume for each cylinder.

Operation

The canister control valve is installed near of the engine air filter. The Engine Control Module (ECM) controls the opening and closing of the canister control valve. When the ECM relay is energized, the canister control valve switches from closed to open.

Removal & Installation

1. Disconnect the negative battery cable.
2. Disconnect the canister control valve electrical connector.
3. Disconnect the lines from canister control valve (1).

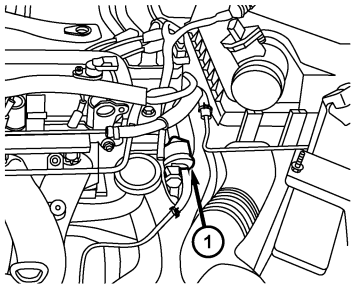

besm030027

4. Remove canister control valve (1) from the bracket.
5. Installation is in the reverse order of removal.

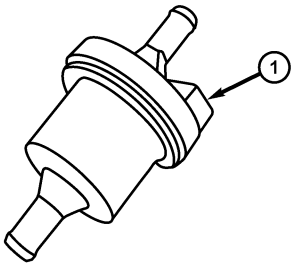

besm030014

Canister Control Solenoid Valve 2.4L

Description

The canister control valve is located near of the engine air filter.

Operation

The Engine Control Module (ECM) controls the opening and closing of the canister control valve. When the ECM relay is energized, the canister control valve switches from closed to open. The ECM uses a pulse-width modulated canister control valve to regulates the rate of vapor flow from the vapor canister to the throttle body. The ECM con-

Downloaded from www.Manualslib.com manuals search engine

trols the frequency when the canister control valve operates in order to accommodate the vapor volume for each cylinder.

Removal & Installation

1. Disconnect the battery negative cable.
2. Disconnect canister control solenoid valve electrical connector.
3. Remove the canister control solenoid valve retaining bolt (1).
   (Tighten: Canister control valve retaining bolt to 15 N·m)

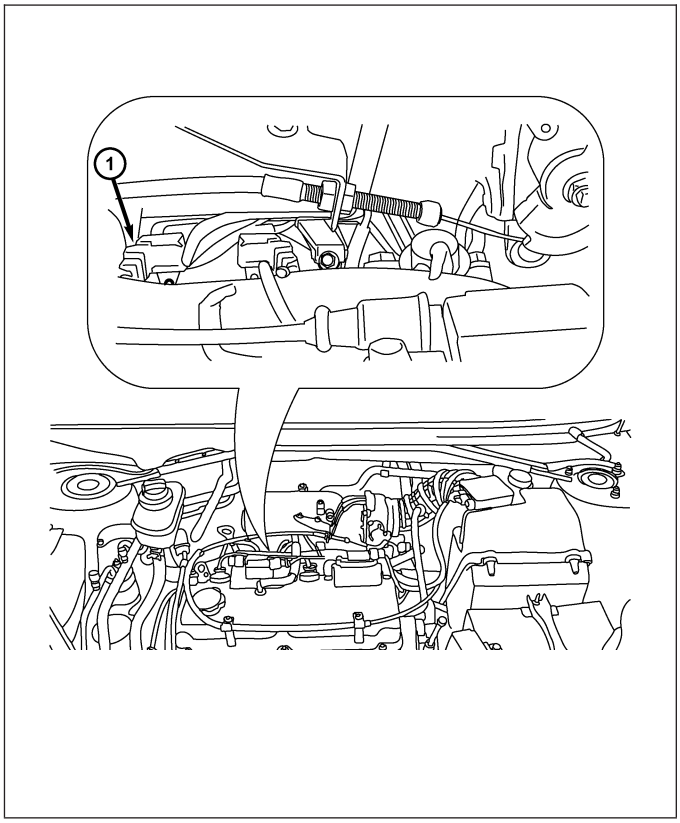

4. Remove the canister control valve.
5. Installation is in the reverse order of removal.

Vapor Canister 1.6L & 1.8L & 2.0L

Description

The vapor canister is located on the left side of the core support and is filled with activated carbon granules.

Operation

The vapor canister is filled with activated carbon granules. Fuel tank vapors are vented into the canister where they are absorbed by the activated carbon granules. The canister temporarily holds the fuel vapors until intake manifold vacuum draws them into the cylinder chamber. The Engine Control Module (ECM) purges the canister through the pulse-width modulated canister control valve. The ECM purges the canister at predetermined intervals and engine conditions.

Removal & Installation

1. Raise and support the vehicle.

Downloaded from www.Manualslib.com manuals search engine

2. Remove vapor canister retaining bolts (1).
   (Tighten: Vapor canister retaining bolt to 10 N·m)

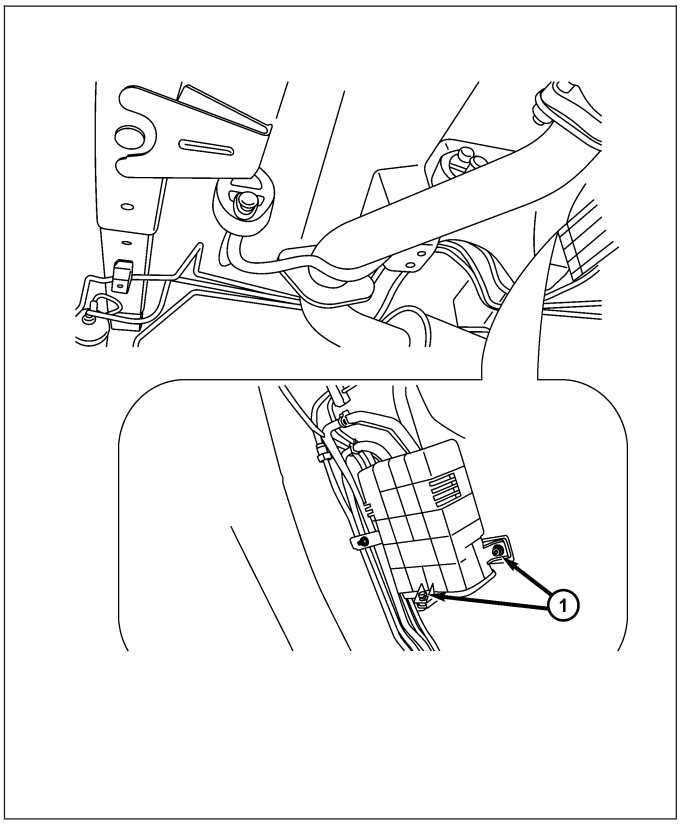

3. Loosen the vapor canister hose.
4. Pull canister rearward to remove.
5. Installation is in the reverse order of removal.

Vapor Canister 2.4L

Description

The vapor canister is located on the left side of the core support and is filled with activated carbon granules.

Operation

The vapor canister is filled with activated carbon granules. Fuel tank vapors are vented into the canister where they are absorbed by the activated carbon granules. The canister temporarily holds the fuel vapors until intake manifold vacuum draws them into the cylinder chamber. The Engine Control Module (ECM) purges the canister through the pulse-width modulated canister control valve. The ECM purges the canister at predetermined intervals and engine conditions.

Removal & Installation

1. Raise and support the vehicle.

Downloaded from www.Manualslib.com manuals search engine

2. Remove the vapor canister retaining bolts (1).
   (Tighten: Vapor canister retaining bolts to 10 N·m)

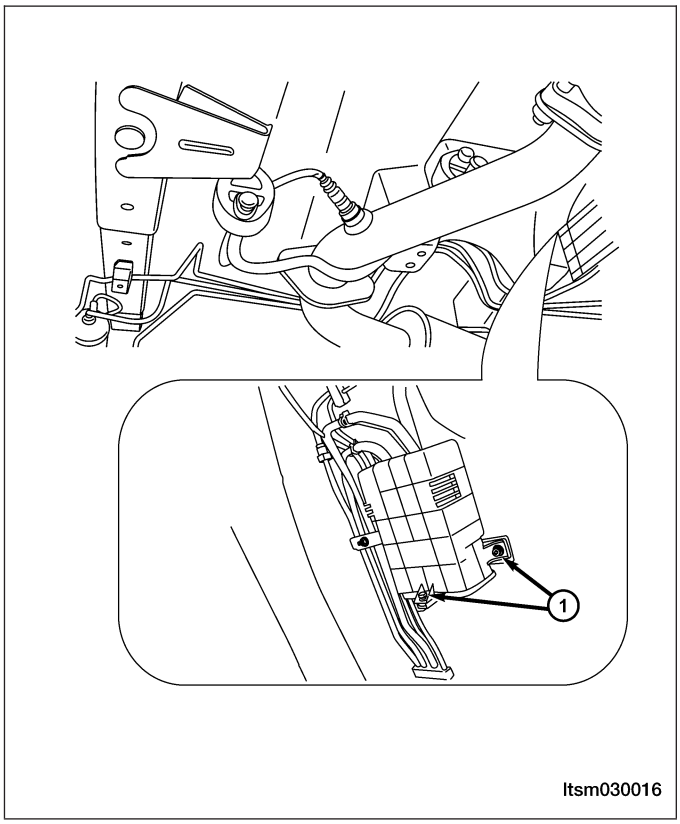

3. Loosen the vapor canister hose.
4. Pull canister rearward to remove.
5. Installation is in the reverse order of removal.

EGR Control Solenoid Valve 2.4L

Removal & Installation

1. Disconnect the battery negative cable.
2. Disconnect EGR control solenoid valve electrical connector from the wiring harness connector.
3. Remove the EGR control solenoid valve retaining bolt (1).
   (Tighten: EGR control solenoid valve retaining bolt to 15 N·m)

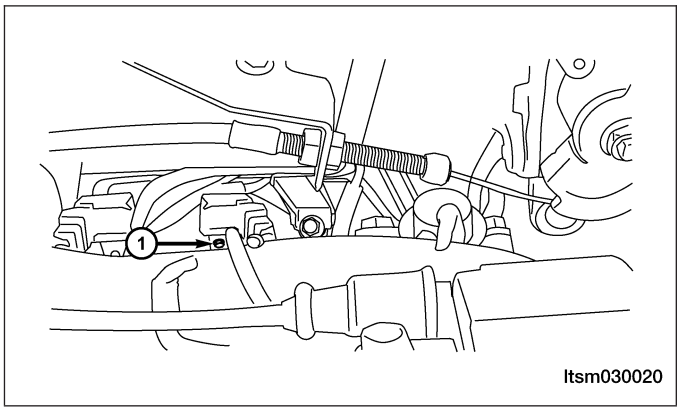

4. Installation is in the reverse order of removal.

Downloaded from www.Manualslib.com manuals search engine

EGR Valve 2.4L

Description

The EGR valve (1) is located on the underside of the idle air control motor. It is controlled by the vacuum hose.

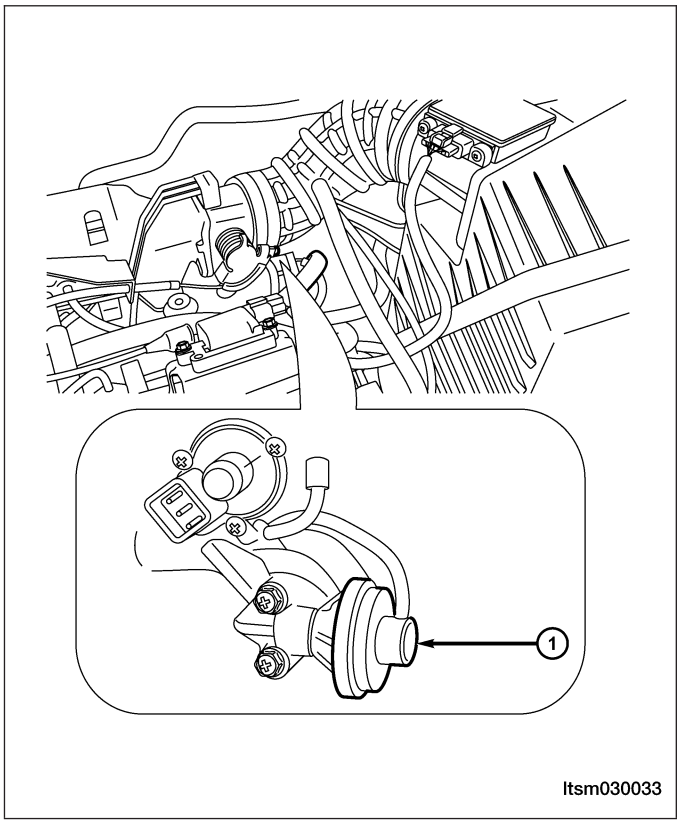

Operation

The EGR valve can heighten the intake air temperature and reduce the NOx content in the exhaust. It is controlled by the coolant temperature sensor and the throttle position sensor.

Downloaded from www.Manualslib.com manuals search engine

Removal & Installation

1. Remove the EGR vacuum hose.
2. Remove the EGR valve retaining bolts (1).
   (Tighten: EGR valve retaining bolts to 25 N·m)

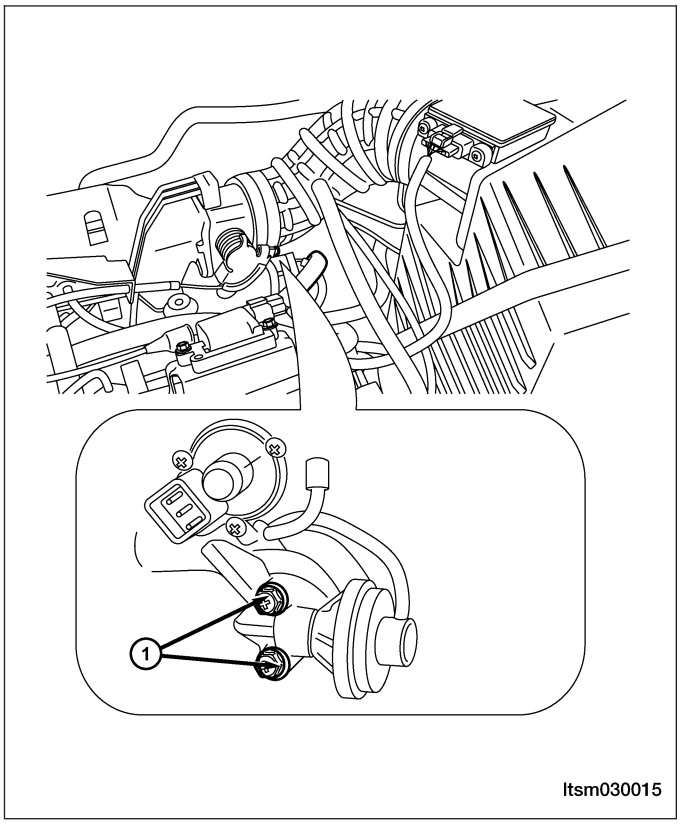

3. Installation is in the reverse order of removal.

Downloaded from www.Manualslib.com manuals search engine

FUEL DELIVERY
04

CONTENTS

page

Fuel Delivery System **04-1**

FUEL DELIVERY SYSTEM

GENERAL INFORMATION 04-2
- Description 04-2
- Operation 04-4
- Specifications 04-4
- Special Tools 04-5
- Electrical Schematics 04-6

DIAGNOSIS & TESTING 04-12
- Fuel Pressure Test 04-12

ON-VEHICLE SERVICE 04-15
- **Fuel Pressure Relief Procedure** 04-15
  - Description 04-15
- **Fuel Pump** 04-15
  - Description 04-15
  - Operation 04-15
  - Removal & Installation 04-15
  - Fuel Pump Inspection 04-17
- **Fuel Filter** 04-18
  - Description 04-18
  - Operation 04-18
  - Removal & Installation 04-18
- **Fuel Injector Rail** 04-19
  - Description 04-19
  - Operation 04-19
  - Removal & Installation - 1.6L & 1.8L & 2.0L 04-19
  - Removal & Installation - 2.4L 04-20
- **Fuel Injector** 04-20
  - Description 04-20
  - Operation 04-20
  - Removal & Installation - 1.6L & 1.8L & 2.0L 04-20
  - Removal & Installation - 2.4L 04-21
  - Fuel Injector Inspection 04-22
- **Fuel Pressure Regulator - With Mitsubishi 2.4L Engine** 04-23
  - Description 04-23
  - Operation 04-23
  - Removal & Installation 04-23
  - Fuel Pressure Regulator Inspection 04-24

Downloaded from www.Manualslib.com manuals search engine

GENERAL INFORMATION

Description

The fuel system consists of a fuel tank with a reservoir, fuel pump, fuel filter, fuel delivery line, fuel rail, fuel rail pulse damper and fuel injectors. The Engine Control Module (ECM) controls the fuel system based on signal inputs. The immobilizer module signals the ECM to activate the fuel system. If the ECM does not receive the proper signal from the immobilizer module, the ECM will not allow the fuel system to operate.

- The ACTECO engine utilizes a returnless fuel delivery system.
- The MITSUBISHI engine utilizes a fuel return fuel delivery system.

WARNING!

Do not smoke or carry lighted tobacco or open flame of any type when working on or near any fuel-related component. Highly flammable mixtures are always present and may be ignited. Failure to follow these instructions may result in serious personal injury.

Fuel Filler Assembly

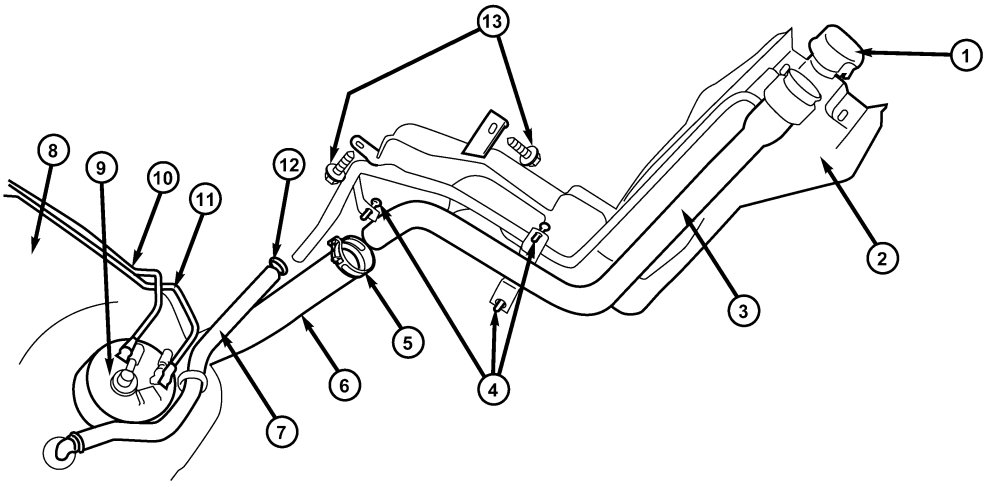

Itsm040008

1 - Fuel Filler Cap Assembly	8 - Fuel Tank Assembly
2 - Fuel Filler Shield	9 - Electric Fuel Pump Assembly
3 - Fuel Filler Tube Assembly	10 - Fuel Delivery Pipe Assembly
4 - Bolt	11 - Fuel Return Pipe Assembly
5 - Hose Clamp	12 - Hose Clamp
6 - Fuel Filler Hose	13 - Bolt
7 - Fuel Filler Air Hose	

Downloaded from www.Manualslib.com manuals search engine

Fuel Tank Assembly

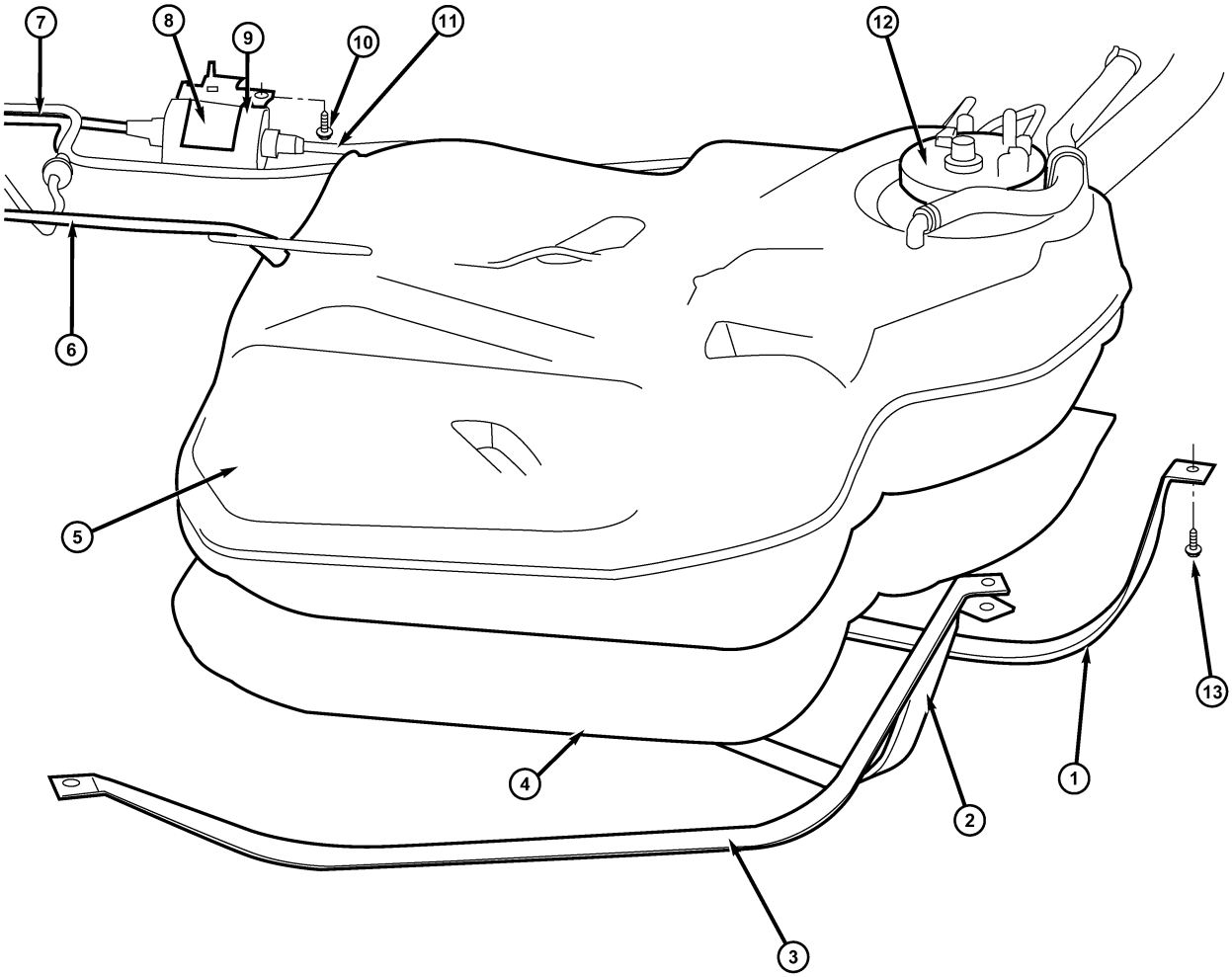

ltsm040009

1 - Fuel Tank Band I	8 - Fuel Filter Bracket
2 - Fuel Tank Band II	9 - Fuel Filter Assembly
3 - Fuel Tank Band III	10 - Bolt
4 - Fuel Tank Protector	11 - Fuel Delivery Pipe
5 - Fuel Tank Assembly	12 - Electric Fuel Pump Assembly
6 - EVAP Hose	13 - Bolt
7 - Fuel Delivery And Return Pipes Assembly	

Downloaded from www.Manualslib.com manuals search engine

EVAP Emissions Assembly

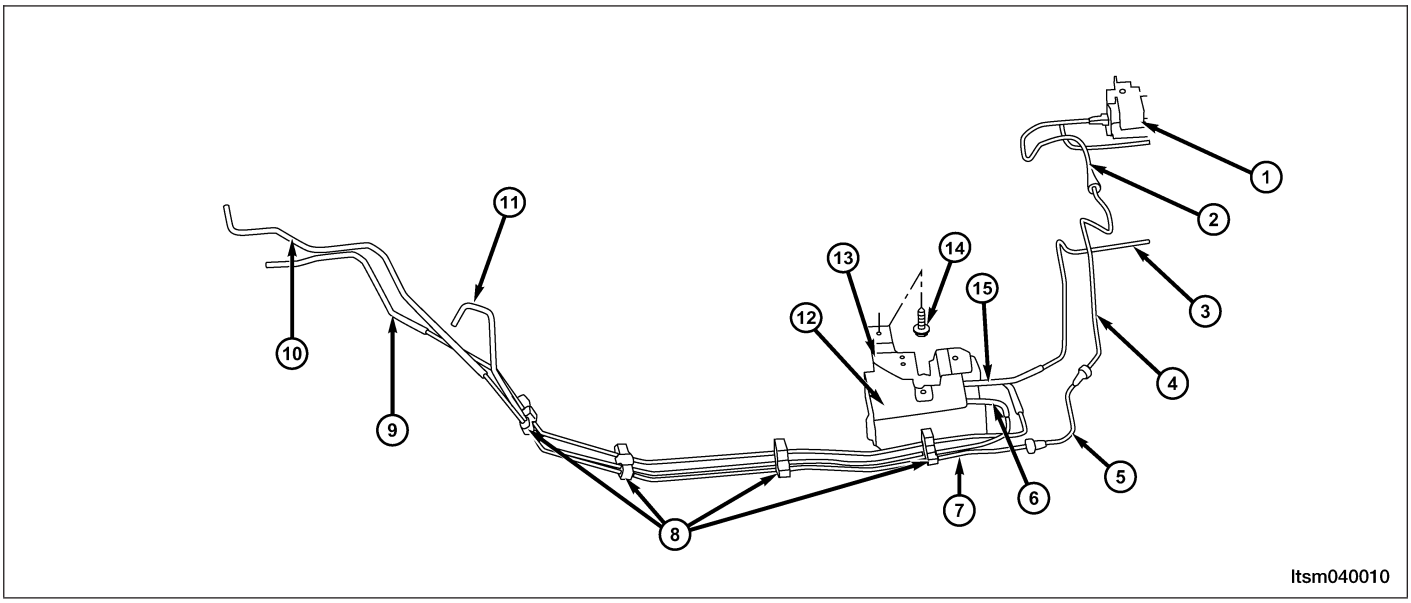

1 - Fuel Filter Assembly	9 - EVAP Hose V
2 - Fuel Delivery and Return Pipes	10 - Fuel Delivery Hose
3 - EVAP Pipe I	11 - Air Duct
4 - Fuel Delivery Pipe III	12 - Canister Assembly
5 - Fuel Delivery Pipe IV	13 - Canister Bracket Assembly
6 - Air Duct	14 - Bolt
7 - Fuel Delivery Pipe V	15 - EVAP Hose I
8 - Pipe Clamps	

Operation

The fuel delivery system is enabled when it reaches the following conditions:

- Turn the ignition switch ON (engine off), the fuel delivery system is enabled for 3-6 seconds.
- The Engine Control Module (ECM) receives a Crankshaft Position (CKP) sensor signal.

The fuel injectors are a solenoid-operated valve that meter fuel flow to each cylinder. The fuel injectors are opened and closed constantly during engine operation. The amount of fuel is controlled by the length of time the fuel injector is held open. The fuel injectors are powered by a 12 V source and are controlled through the ground side of the circuit by the ECM.

The fuel pump operation is defined in the fuel system control strategy and is controlled by the ECM.

Specifications

Torque Specifications

DESCRIPTION	TORQUE (N·m)
Fuel Rail Bracket Bolts	11
Fuel Filter Mounting Bolts	10

Downloaded from www.Manualslib.com manuals search engine

Fuel Pressure Specifications

1.6L & 1.8L & 2.0L	PRESSURE
Fuel Pressure at Fuel Rail - Key On	400 kPa (4.0 bar)
Fuel Pressure at Fuel Rail - Engine Idle	400 kPa (4.0 bar) - 420 kPa (4.2 bar)
Fuel Pressure at Fuel Rail - Key Off	380 kPa (3.8 bar) in 10 minutes

2.4L	PRESSURE
Fuel Pressure at Fuel Rail - Key On	329 kPa (3.29 bar)
Fuel Pressure at Fuel Rail - Engine Idle	320 kPa (3.2 bar) - 350 kPa (3.5 bar)
Fuel Pressure at Fuel Rail - Key Off	350 kPa (3.5 bar) in 10 minutes

Special Tools

Digital Multimeter Fluke 15B & 17B	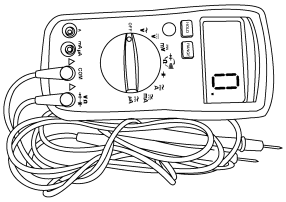 besm030002
Fuel Pressure Gauge	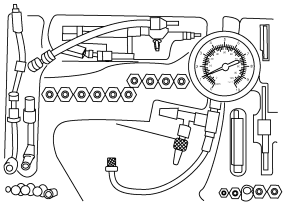 besm030008
Fuel Pump Remover CH-20032	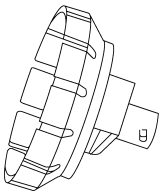 ltsm040011

Downloaded from www.Manualslib.com manuals search engine

Electrical Schematics

Fuel Delivery System (Page 1 of 6)

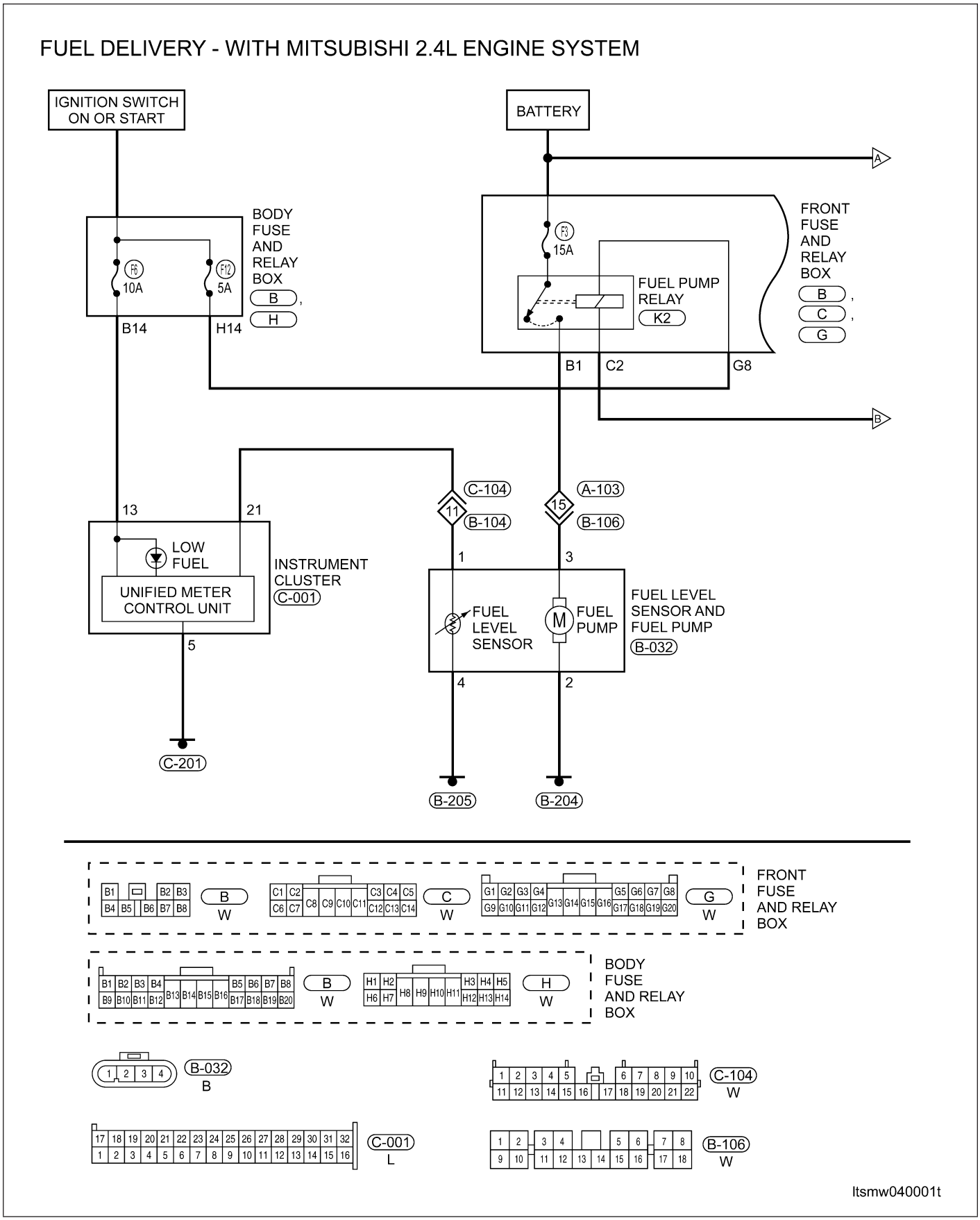

Downloaded from www.Manualslib.com manuals search engine

Fuel Delivery System (Page 2 of 6)

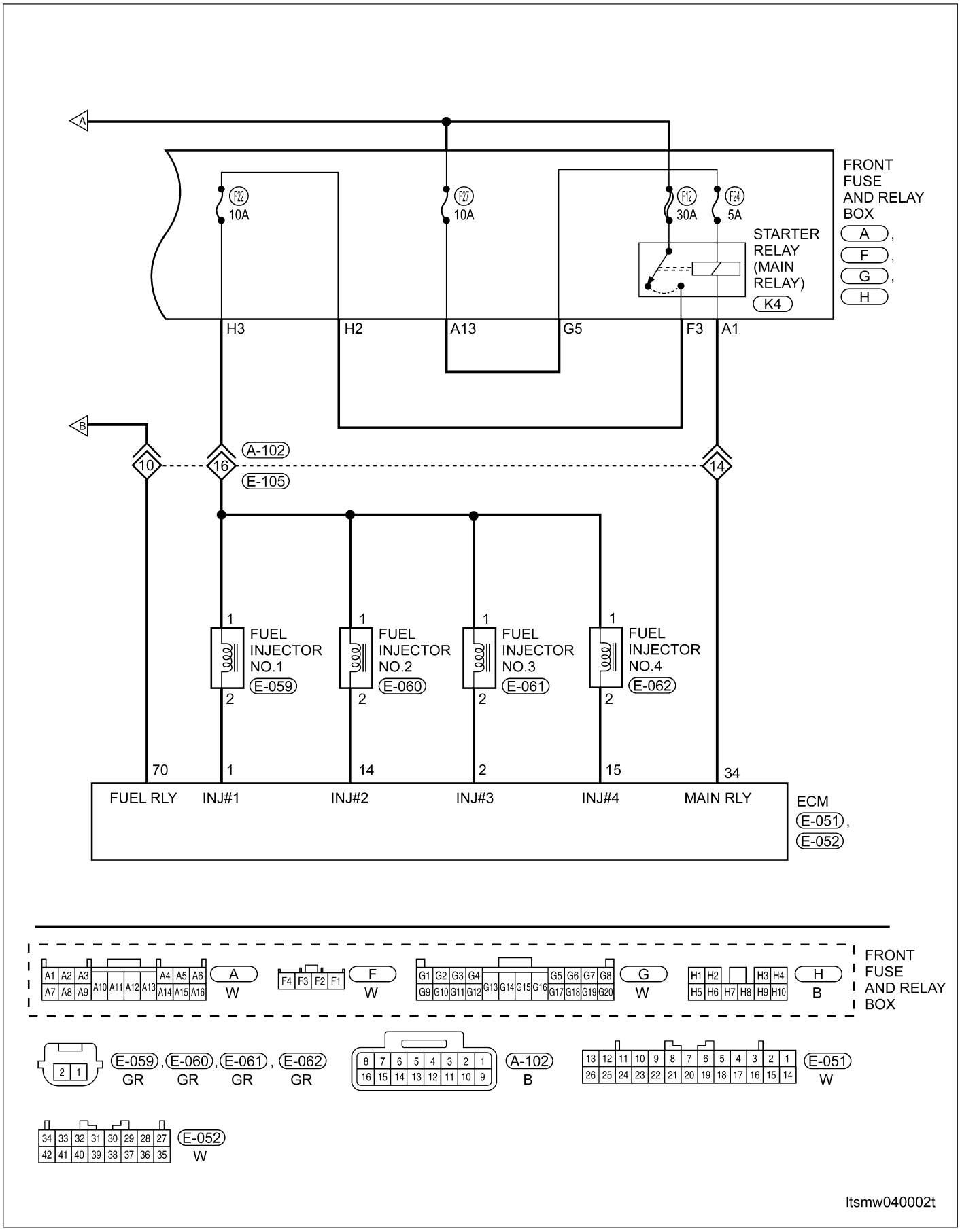

Downloaded from www.Manualslib.com manuals search engine

Fuel Delivery System (Page 3 of 6)

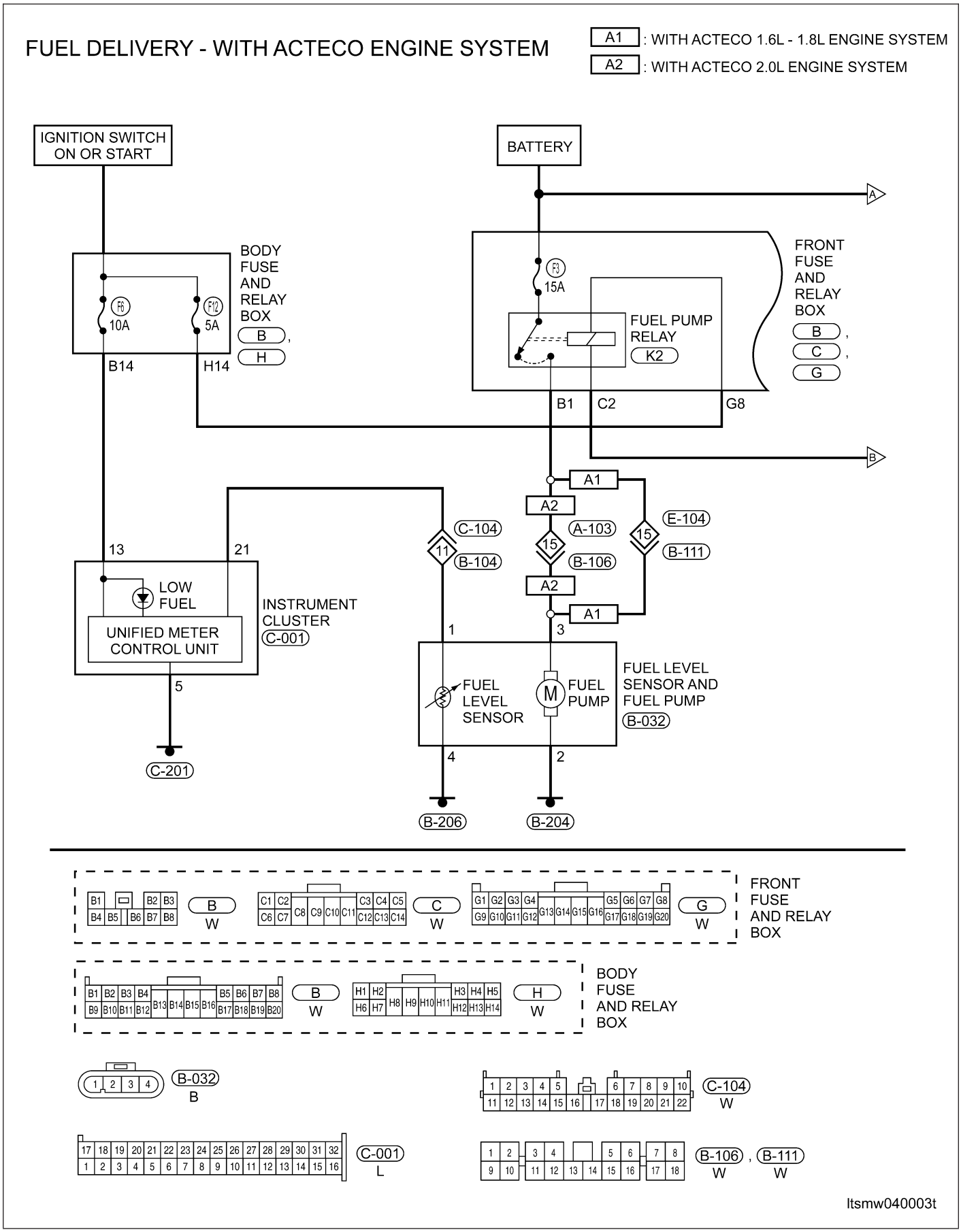

Downloaded from www.Manualslib.com manuals search engine

Fuel Delivery System (Page 4 of 6)

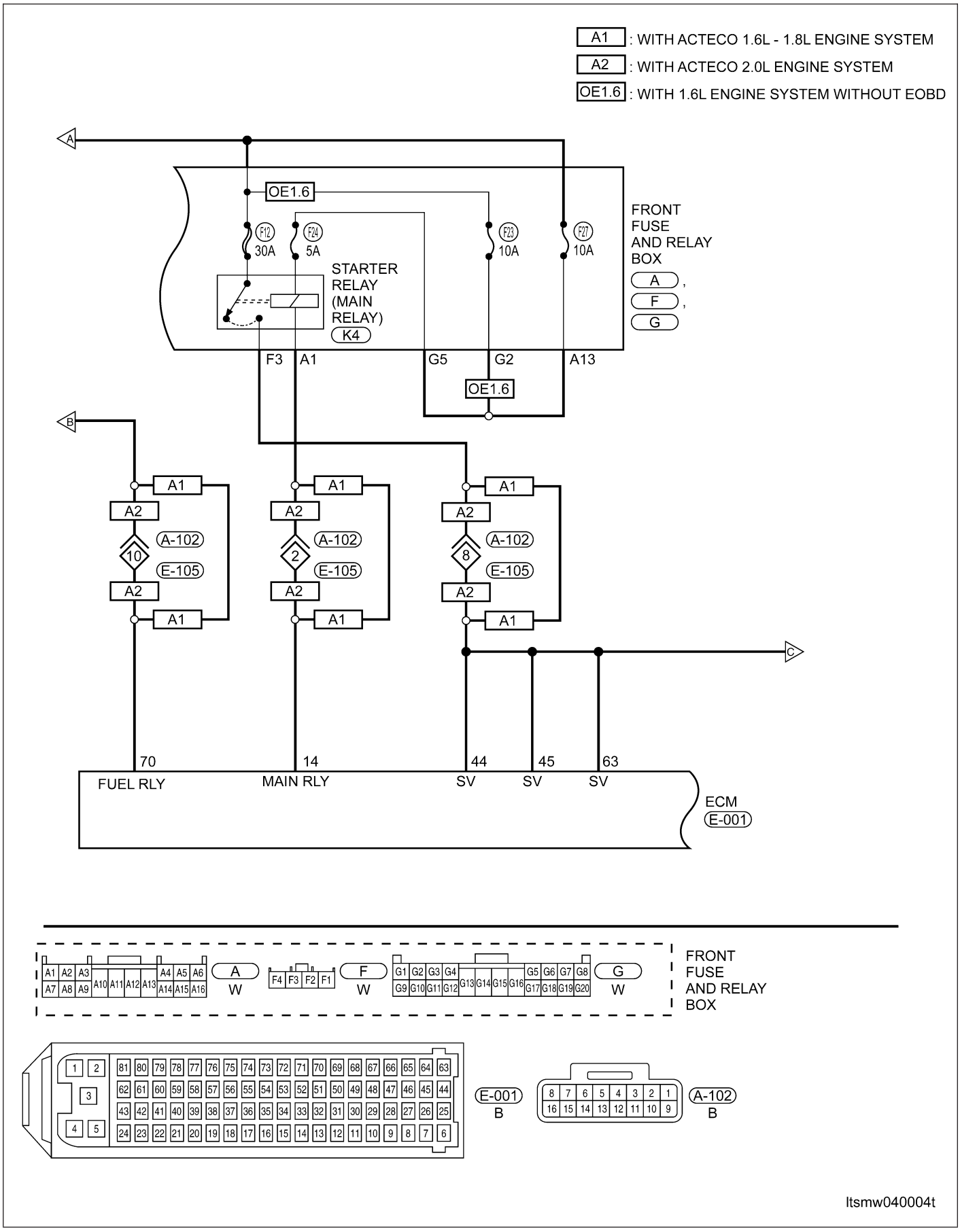

ltsmw040004t

Downloaded from www.Manualslib.com manuals search engine

Fuel Delivery System (Page 5 of 6)

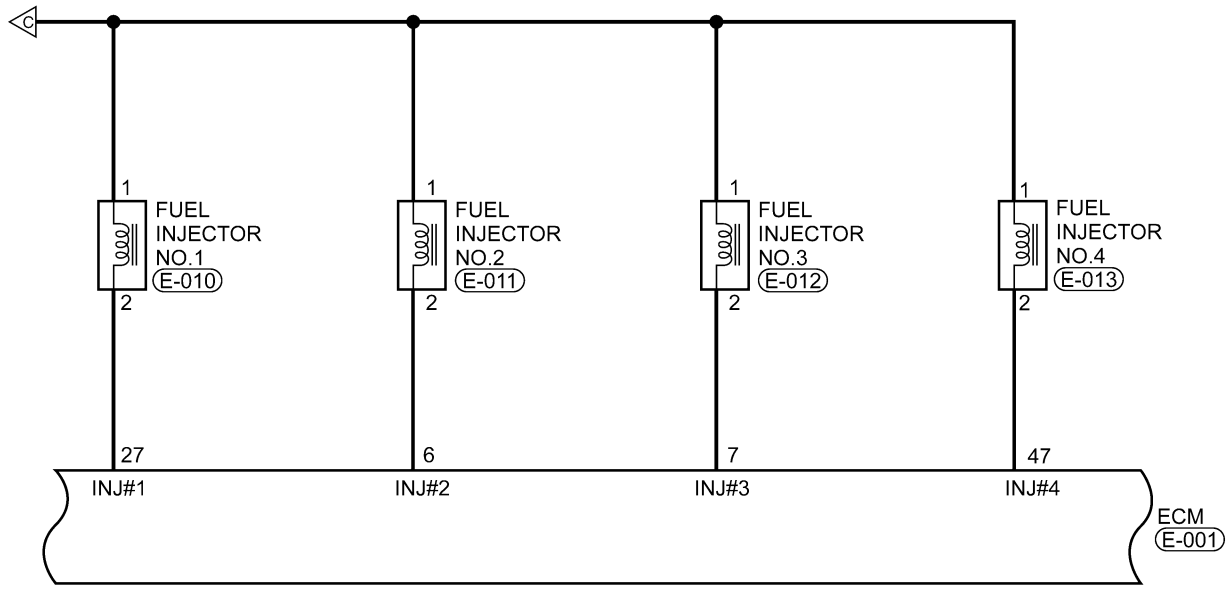

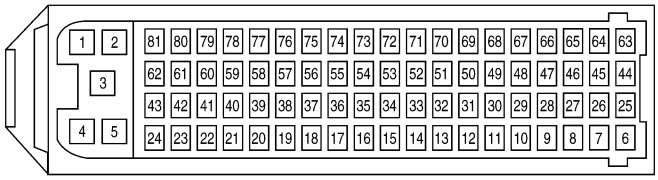

E-001
B

E-010, E-011, E-012, E-013
B B B B

ltsmw040005t

Downloaded from www.Manualslib.com manuals search engine

Fuel Delivery System (Page 6 of 6)

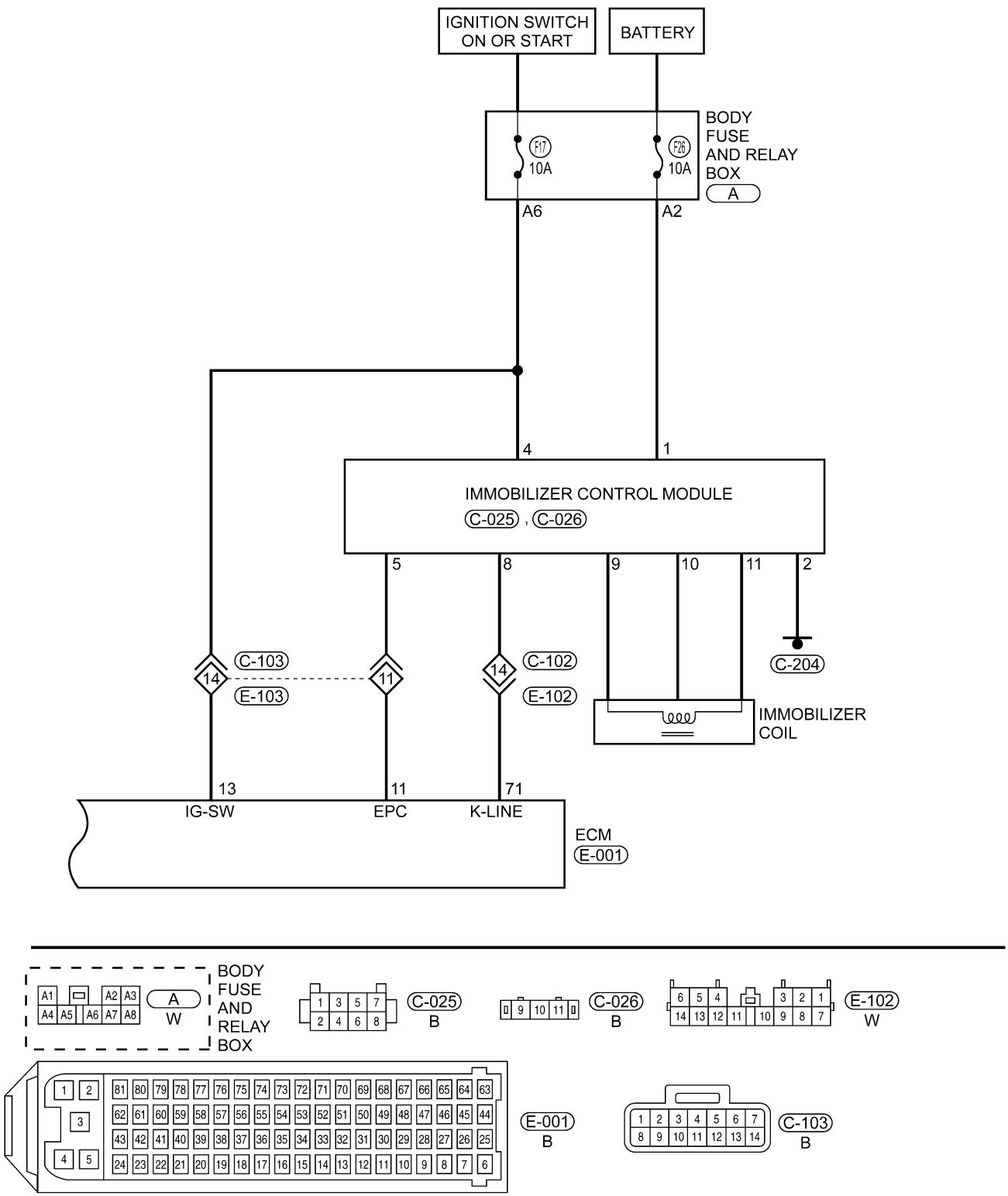

ltsmw040006t

Downloaded from www.Manualslib.com manuals search engine

Fuel Pressure Test

WARNING!

Fuel in the fuel system remains under high pressure, even when the engine is not running. Before servicing or disconnecting any of the fuel lines or fuel system components, the fuel system pressure must be relieved to prevent accidental spraying of fuel (See Fuel Pressure Relief Procedure in Section 04 Fuel Delivery). Failure to follow these instructions may result in serious personal injury or death.

Perform the following procedure to test for proper fuel pressure.

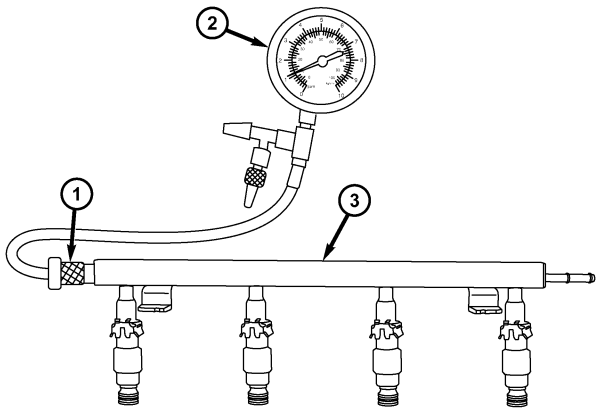

besm030020

WARNING!

Wrap towels around hoses to catch any gasoline spillage.

1. Remove the protective cap and connect the fuel pressure gauge (2) to the fuel rail service test port pressure fitting (1) on the fuel rail (3).
2. Start and warm the engine and note the pressure gauge reading:

1.6L & 1.8L & 2.0L

- Fuel pressure at idle: 400-420 kPa (4.0 - 4.2 bar)

Downloaded from www.Manualslib.com manuals search engine

2.4L

- Fuel pressure at idle: 320-350 kPa (3.2 - 3.5 bar)

3. If engine runs, but pressure is below minimum pressure, check the following:
   a. Check for a kinked fuel supply line between the fuel rail and the fuel pump, repair if necessary.
   b. Check the fuel filter for blockage, and replace the fuel filter if necessary (See Fuel Filter Removal & Installation in Section 04 Fuel Delivery).
   c. Check the fuel pump, and replace if necessary (See Fuel Pump Removal & Installation in Section 04 Fuel Delivery).
4. If operating pressure is above the maximum pressure, the electric fuel pump is OK, but fuel pressure regulator is defective. Replace the fuel pressure regulator (See Fuel Pump Removal & Installation in Section 04 Fuel Delivery).

NOTE:

- The 1.6L & 1.8L & 2.0L fuel pressure regulator is integrated into the fuel pump assembly and is not serviced separately.
- The 2.4L fuel pressure regulator is connected to the fuel rail, and is serviced separately.

5. Install the protective cap to the service test port pressure fitting (1) on the fuel rail.

Observe the following fuel pressures when testing:

FUEL PRESSURE - 1.6L & 1.8L & 2.0L	
Key On	400 kPa (4.0 bar)
Engine Idle	400-420 kPa (4.0 - 4.2 bar)
Key Off	380 kPa (3.8 bar) in 10 minutes

FUEL PRESSURE - 2.4L	
Key On	329 kPa (3.29 bar)
Engine Idle	320-350 kPa (3.2 - 3.5 bar)
Key Off	350 kPa (3.5 bar) in 10 minutes

Fuel System Troubleshooting Chart

CONDITION	POSSIBLE CAUSES	CORRECTION
No Start/Hard Start/Start and then Stall	· Contaminated fuel · Low fuel pressure · Restricted fuel filter · Fuel pump relay inoperative · Restricted or leaking fuel lines · Fuel pressure regulator	· Drain, flush and refill fuel system. · Check fuel pump pressure. · Replace fuel filter. · Test fuel pump relay. · Inspect/replace necessary fuel line(s), perform fuel system air purge. · Inspect/replace the fuel pump if necessary.
Stalls Under Aggressive Maneuvers/ Loss Of Fuel Pressure	· Restricted or damaged fuel filter · Contaminated fuel · Damaged fuel tank	· Replace fuel filter. · Drain, flush and refill fuel system. · Replace fuel tank.
Cannot Refill Fuel Tank/Excessive Pressure in Fuel Tank When Cap is Removed	· Sticking or damaged fuel tank fill/vent valve, hose or lines.	· Inspect, repair vent hose and lines, replace fuel tank.

Downloaded from www.Manualslib.com manuals search engine

Fuel Pump Troubleshooting Chart

CONDITION	POSSIBLE CAUSES	CORRECTION
Symptoms of a Defective Fuel Pump	· Noisy operation · Poor acceleration · Failure to start (starting difficulties)	· Replace the fuel pump
Reasons For Fuel Pump Failure	· Accumulated contaminants causing an insulation layer · Fuel pump bushing and armature blocked · Eroded fuel level sensor components	· Replace the fuel pump

Fuel Injector Troubleshooting Chart

CONDITION	POSSIBLE CAUSES	CORRECTION
Symptoms of a Defective Fuel Injector(s)	· Poor idling · Poor acceleration · Failure to start (starting difficulties)	· Replace the fuel injector(s)
Reasons For Fuel Injector Failure	· An accumulation of contaminants inside the injector due to lack of maintenance	· Clean injectors regularly with an approved method

Downloaded from www.Manualslib.com manuals search engine

ON-VEHICLE SERVICE

Fuel Pressure Relief Procedure

Description

WARNING!

Fuel in the fuel system remains under high pressure, even when the engine is not running. Before servicing or disconnecting any of the fuel lines or fuel system components, the fuel system pressure must be relieved to prevent accidental spraying of fuel. Failure to follow these instructions may result in serious personal injury or death.

Perform the following procedure to relieve fuel pressure from the fuel system:

1. Remove the cover of the front fuse and relay box.
2. Identify and remove the fuel pump relay from the front fuse and relay box.
3. Start and run engine until it stalls.
4. Attempt to restart engine until it will no longer run.
5. Turn the ignition key to the OFF position.

Fuel Pump

Description

The fuel pump assembly contains the fuel pump motor and fuel level sensor.

Operation

The Engine Control Module (ECM) activates the fuel pump relay for several seconds after the ignition switch is turned ON. When the relay is activated, it provides voltage to the fuel pump. When the ECM receives an engine speed signal from the Crankshaft Position (CKP) sensor and a signal from the Immobilizer control module, the ECM will energize the fuel pump relay.

NOTE :

- The electric fuel pump has different flow ratings based on engine requirements
- For service, the part number of the replacement fuel pump must be the equivalent of the original fuel pump
- Do not operate the fuel pump dry, this will damage the fuel pump
- Keep the fuel tank and pipeline clean, and replace the fuel filter if the fuel pump is replaced

Removal & Installation

WARNING!

Release fuel system pressure before servicing fuel system components. Service vehicles in well-ventilated areas and avoid ignition sources. Never smoke while servicing the vehicle. This may result in personal injury or death.

NOTE :

The following special tool is required to perform the repair procedure:

- CH-20032 - Fuel Pump Remover

1. Release the fuel system pressure (See Fuel Pressure Relief Procedure in Section 04 Fuel Delivery).
2. Disconnect the negative battery cable.
3. Remove the rear seat cushion.

Downloaded from www.Manualslib.com manuals search engine

4. Remove the fuel pump cover (1).

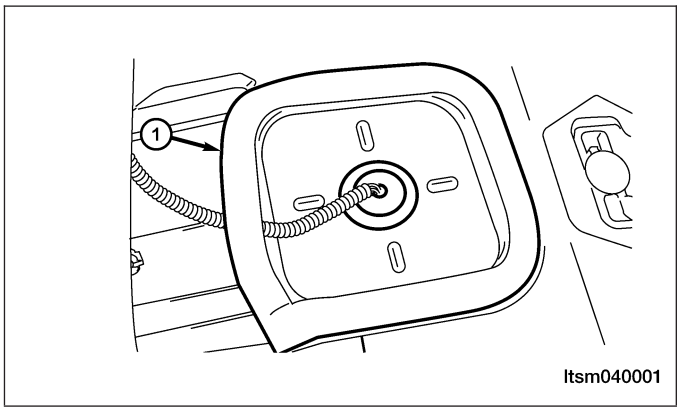

5. Disconnect the fuel pump connector (3) and the fuel delivery hose (2) and fuel return hose (1).
6. Using special tool CH-20032, remove the fuel pump mounting cover (4).

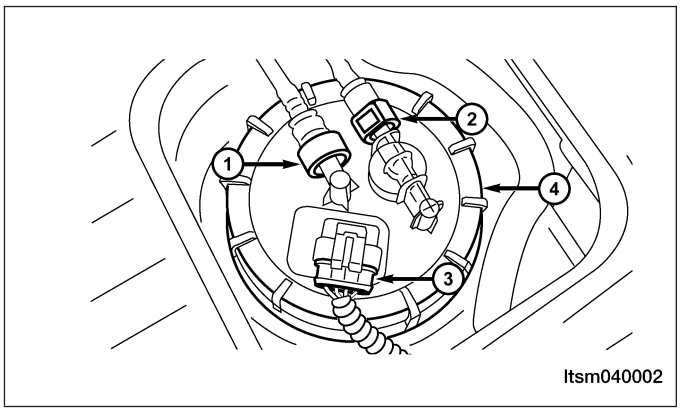

7. Pull the fuel pump up and out of the fuel tank.

WARNING!

Do not smoke, carry lighted tobacco or have an open flame of any type when working on or near any fuel-related component. Highly flammable mixtures are always present and may be ignited. Failure to follow these instructions may result in serious personal injury or death.

Do not carry personal electronic devices such as cell phones, pagers or audio equipment of any type when working on or near any fuel-related component. Highly flammable mixtures are always present and may be ignited. Failure to follow these instructions may result in serious personal injury or death.

When handling fuel, always observe fuel handling precautions and be prepared in the event of fuel spillage. Spilled fuel may be ignited by hot vehicle components or other ignition sources. Failure to follow these instructions may result in serious personal injury or death.

NOTE :
Make sure not to spill fuel inside of the vehicle.

8. Tip the fuel pump on its side and drain the fuel from the fuel pump and remove the fuel pump from the vehicle.
   NOTE: To keep the fuel tank portion clean and to avoid damage and foreign materials, cover them completely with plastic bags or something similar.
9. Remove and discard the seal from the fuel tank.
10. Installation is in the reverse order of removal.

Installation Notes:

- Install a new seal to the fuel pump sealing surface.
- Turn the ignition switch to ON (without starting the engine) to apply fuel pressure to the fuel system, then check the connections for fuel leaks.
- Start the engine and let it idle and check for fuel leaks at the fuel system connections.

Downloaded from www.Manualslib.com manuals search engine

Fuel Pump Inspection

1. Using the following table, apply battery voltage to the specified connector terminals.
2. Check the fuel pump resistance.
   - Take out the fuel pump.
   - Connect the digital multimeter to terminals 2 and 3. Check the fuel pump resistance.
   - If the result is not as specified, replace the fuel pump.
3. Check fuel pump operation.
   - Remove the fuel pump.
   - Apply battery voltage to terminals 2 and 3. Check that the pump operates within 10 seconds.
   - If the pump does not operate, replace the fuel pump.

   NOTE:
   - These tests must be completed within 10 seconds to prevent the coil from burning out.
   - Keep the fuel pump as far away from the battery as possible.
   - Always switch the voltage on and off on the battery side, not on the fuel pump side.

MEASURING CONDITION	SPECIFICATION	INSPECTION DIAGRAM
Digital Multimeter Positive (+) to terminal – 2 Digital Multimeter Negative (-) to terminal – 3	< 130 Ω	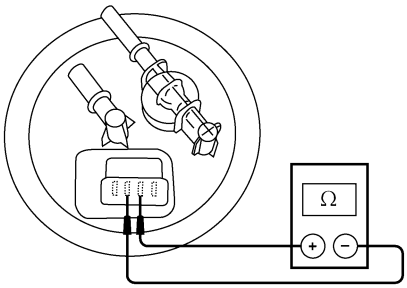 ltsm040012
Battery positive (+) to terminal – 2 Battery negative (-) to terminal – 3	8 - 16 V	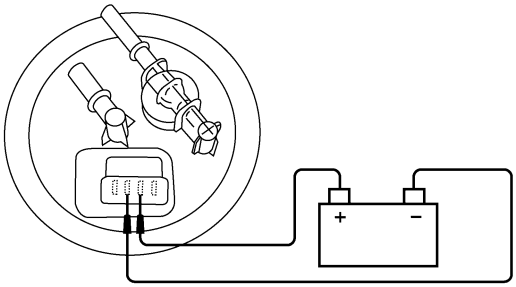 ltsm040013

Downloaded from www.Manualslib.com manuals search engine

Fuel Filter

Description

The fuel filter consists of a housing with an integrated filter element.

Operation

The fuel flows through the filter from the outside to the inside. As a result, any impurities are trapped inside the filter.

Removal & Installation

WARNING!

Release fuel system pressure before servicing fuel system components. Service vehicles in well-ventilated areas and avoid ignition sources. Never smoke while servicing the vehicle. This may result in personal injury or death.

1. Release the fuel system pressure (See Fuel Pressure Relief Procedure in Section 04 Fuel Delivery).
2. Disconnect the negative battery cable.
3. Remove the fuel delivery hose (1), fuel outlet hose (2) and the ground wire (3).
4. Remove the fuel filter.
5. Installation is in the reverse order of removal.

Installation Notes:

- Verify there are no leaks at the fuel line connections of the fuel filter.

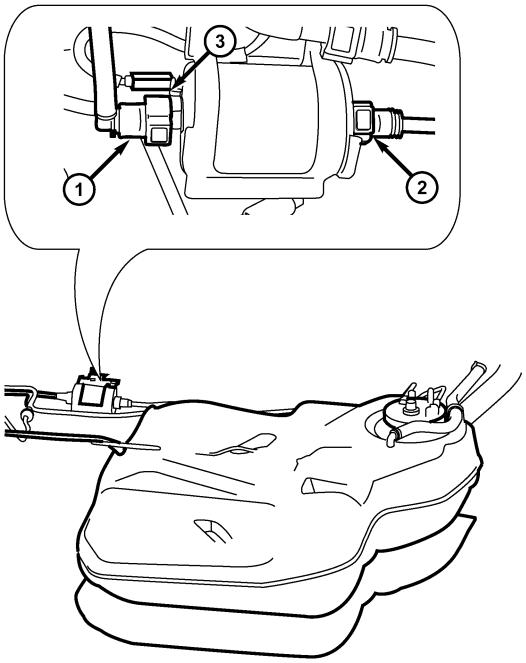

ltsm040003

Downloaded from www.Manualslib.com manuals search engine

Fuel Injector Rail

Description

The fuel rail is used to mount the fuel injectors to the engine and it is mounted to the intake manifold.

Operation

The fuel rail supplies the necessary fuel to each individual fuel injector and is located above the intake manifold and fuel injectors.

Removal & Installation - 1.6L & 1.8L & 2.0L

WARNING!

Release fuel system pressure before servicing fuel system components. Service vehicles in well-ventilated areas and avoid ignition sources. Never smoke while servicing the vehicle. This may result in personal injury or death.

1. Release the fuel system pressure (See Fuel Pressure Relief Procedure in Section 04 Fuel Delivery).
2. Disconnect the negative battery cable.
3. Remove the engine cover.
4. Disconnect the electrical connectors (1) from the fuel injectors.
5. Remove the fuel line (2) from the fuel rail.
6. Remove the two fuel rail (4) bracket bolts (3) that mount the fuel rail to the intake manifold. (Tighten: Fuel rail bracket bolts to 11 N·m)

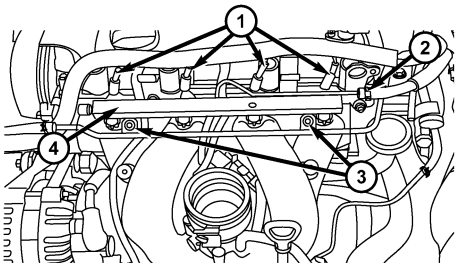

besm040003

7. Remove the fuel rail with the four fuel injectors (1).
8. Installation is in the reverse order of removal.

Installation Notes:

- Install new seals on the fuel injector sealing surfaces.

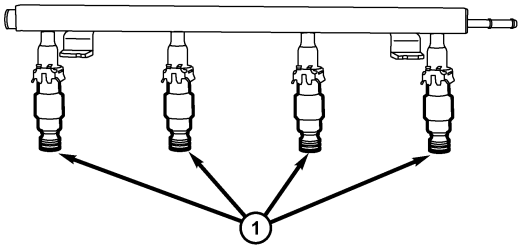

besm040005

Downloaded from www.Manualslib.com manuals search engine

Removal & Installation - 2.4L

WARNING!

Release fuel system pressure before servicing fuel system components. Service vehicles in well-ventilated areas and avoid ignition sources. Never smoke while servicing the vehicle. This may result in personal injury or death.

1. Release the fuel system pressure (See Fuel Pressure Relief Procedure in Section 04 Fuel Delivery).
2. Disconnect the negative battery cable.
3. Disconnect four fuel injector electrical connectors (1).

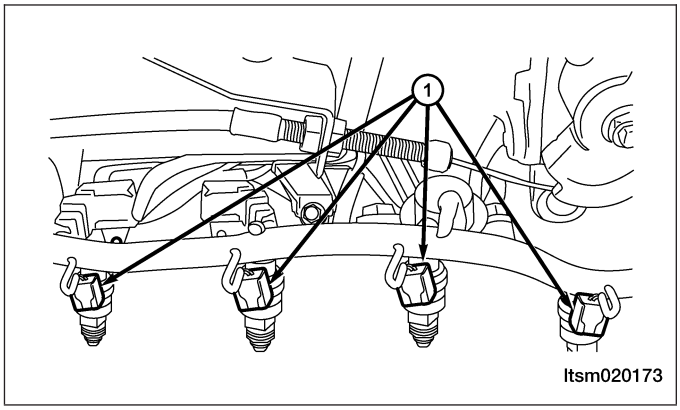

4. Remove the fuel pressure regulator (See Fuel Pressure Regulator Removal & Installation in Section 04 Fuel Delivery).
5. Remove the two fuel rail mounting bolts.
   (Tighten: Fuel rail mounting bolts to 12 N·m)
6. Remove the fuel rail with the four fuel injectors.
7. Installation is in the reverse order of removal.

Installation Notes:

- Install new seals on the fuel injector sealing surfaces.

Fuel Injector

Description

The fuel injectors are positioned in the intake manifold with the nozzle ends directly above the intake valve port.

Operation

Injector operation is controlled by a ground path provided for each injector by the Engine Control Module (ECM). Injector on-time (pulse-width) is variable, and is determined by the ECM. Based on the engine operating conditions, the ECM will control injector pulse-width operation to obtain optimum performance.

Removal & Installation - 1.6L & 1.8L & 2.0L

WARNING!

Release fuel system pressure before servicing fuel system components. Service vehicles in well ventilated areas and avoid ignition sources. Never smoke while servicing the vehicle. This may result in personal injury or death.

1. Release the fuel system pressure (See Fuel Pressure Relief Procedure in Section 04 Fuel Delivery).
2. Disconnect the negative battery cable.
3. Remove the engine cover.
4. Remove the ground cable on the cylinder head.

Downloaded from www.Manualslib.com manuals search engine

5. Disconnect the electrical connectors (1) from the fuel injectors.
6. Remove the fuel line (2) from the fuel rail.
7. Remove the two fuel rail (4) bracket bolts (3) that mount the fuel rail to the intake manifold. (Tighten: Fuel rail bracket bolts to 11 N·m)

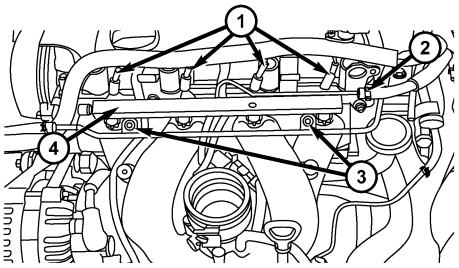

besm040003

8. Remove the fuel injectors (1) from the fuel rail.

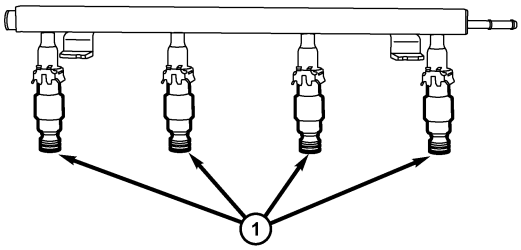

besm040005

9. Installation is in the reverse order of removal.

Installation Notes:

- Coat the surface of the O-ring seals with clean engine oil before installing the fuel injector. Be careful not to damage the O-ring seals when inserting the fuel injector into the fuel distribution tube.

Removal & Installation - 2.4L

WARNING!

Release fuel system pressure before servicing fuel system components. Service vehicles in well ventilated areas and avoid ignition sources. Never smoke while servicing the vehicle. This may result in personal injury or death.

1. Release the fuel system pressure (See Fuel Pressure Relief Procedure in Section 04 Fuel Delivery).
2. Disconnect the negative battery cable.
3. Disconnect four fuel injector electrical connectors (1).

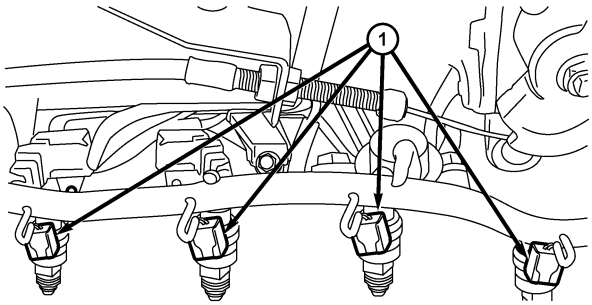

ltsm020173

Downloaded from www.Manualslib.com manuals search engine

4. Remove the fuel pressure regulator (See Fuel Pressure Regulator Removal & Installation in Section 04 Fuel Delivery).
5. Remove the two fuel rail mounting bolts.
   (Tighten: Fuel rail mounting bolts to 12 N·m)
6. Remove the fuel rail with the four fuel injectors.
7. Remove the clamp holding the fuel injector to the fuel rail.
8. Remove the fuel injector from the fuel rail.

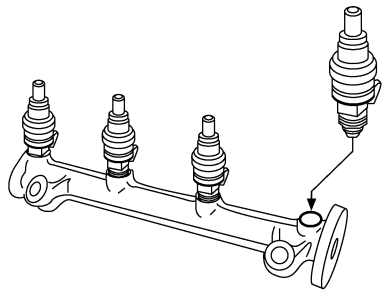

9. Installation is in the reverse order of removal.

Installation Notes:

- Install new seals on the fuel injector sealing surfaces.

Fuel Injector Inspection

1. Remove the fuel injector electrical connector.
2. Use a digital multimeter to measure the resistance between the two fuel injector pins (fuel injector side).

SPECIFICATION	TEMPERATURE
11 - 13 Ω	20°C

Downloaded from www.Manualslib.com manuals search engine

Fuel Pressure Regulator - With Mitsubishi 2.4L Engine

Description

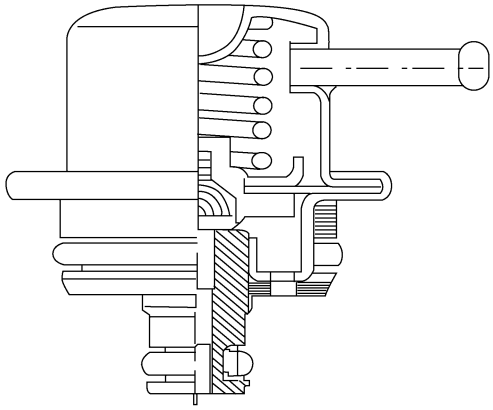

ltsm040007

The fuel pressure regulator is connected to the fuel rail. The fuel pressure regulator has a vacuum connection to it. The fuel pressure regulator is used to regulate the fuel pressure in the fuel system.

NOTE :
The 2.4L is the ONLY engine that uses an external fuel pressure regulator.

Operation

The fuel pressure regulator is designed to keep the fuel pressure in the fuel system at a constant pressure. It does this with a spring-loaded diaphragm that controls a valve. The valve, when opened by excessive pressure in the fuel lines, uncovers a fuel line that returns excess fuel to the fuel tank. The vacuum connection is there to help reduce emissions during deceleration. During deceleration, the vacuum connection serves to open the fuel return valve wider, which reduces pressure in the system and prevents excess hydrocarbon emissions due to less fuel being injected as a result of the lower pressure in the system.

Removal & Installation

WARNING!

Release fuel system pressure before servicing fuel system components. Service vehicles in well ventilated areas and avoid ignition sources. Never smoke while servicing the vehicle. This may result in personal injury or death.

1. Release the fuel system pressure (See Fuel Pressure Relief Procedure in Section 04 Fuel Delivery).
2. Disconnect the negative battery cable.

Downloaded from www.Manualslib.com manuals search engine

3. Disconnect the fuel return pipe (2).
4. Remove the fuel pressure regulator mounting bolts (1).
   (Tighten: Fuel pressure regulator mounting bolts to 9 N·m)

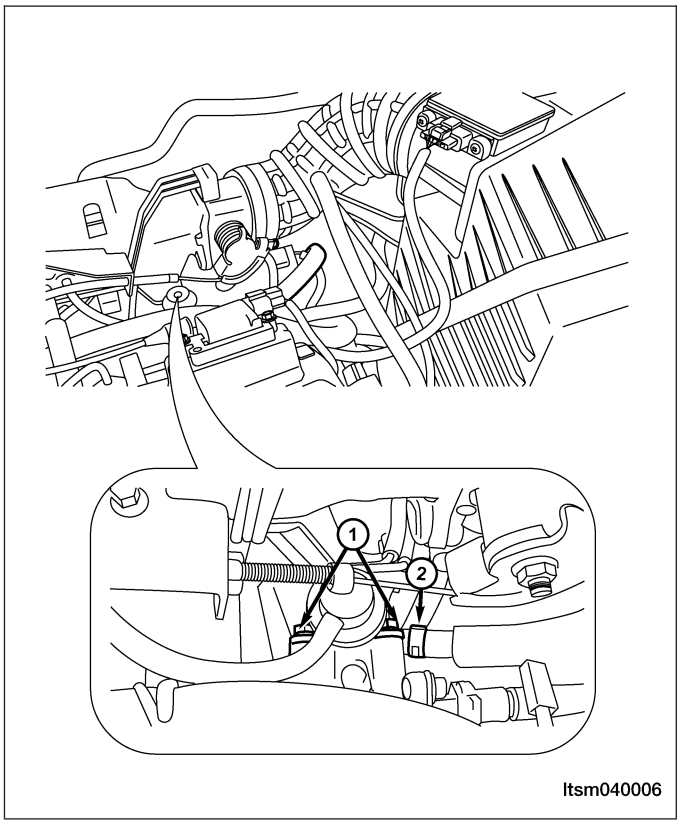

5. Remove the fuel pressure regulator.
6. Installation is in the reverse order of removal.

Installation Notes:

- Install new seals on the fuel pressure regulator sealing surfaces.
- Coat the surface of the fuel pressure regulator O-ring seal with clean engine oil before assembly.
- While installing the fuel pressure regulator, ensure that the fuel pressure regulator rotates smoothly in the fuel distribution tube. If it does not rotate smoothly, the O-ring seal may have been damaged. Remove the fuel pressure regulator and inspect the O-ring seal for damage.

Fuel Pressure Regulator Inspection

1. Connect a fuel pressure gauge to the inlet fuel pipe.
2. Start and idle the engine (note the fuel pressure).
3. Increase the engine speed to 2500 RPM (note the fuel pressure).

SPECIFICATION	PRESSURE
Idle	350 kPa
2500 RPM	350 kPa

Downloaded from www.Manualslib.com manuals search engine

STARTING & CHARGING

05

CONTENTS

page

Starting System 05-1

Charging System 05-11

STARTING SYSTEM

GENERAL INFORMATION 05-2
- Description 05-2
- Operation 05-3
- Specifications 05-3
- Special Tools 05-3
- Electrical Schematics 05-4

DIAGNOSIS AND TESTING 05-6
- Starter Motor Bench Test 05-6
- Starter Solenoid Test 05-6

ON-VEHICLE SERVICE 05-7

Battery 05-7
- Description 05-7
- Operation 05-7
- Removal & Installation 05-7

Positive Battery Cable 05-8
- Removal & Installation 05-8

Negative Battery Cable 05-8
- Removal & Installation 05-8

Battery Hold Down 05-8
- Removal & Installation 05-8

Battery Tray 05-9
- Removal & Installation 05-9

Starter Motor Assembly 05-9
- Description 05-9
- Operation 05-9
- Removal & Installation - 1.6L & 1.8L & 2.0L 05-9
- Removal & Installation - 2.4L 05-10

Downloaded from www.Manualslib.com manuals search engine

GENERAL INFORMATION

Description

1.6L & 1.8L & 2.0L

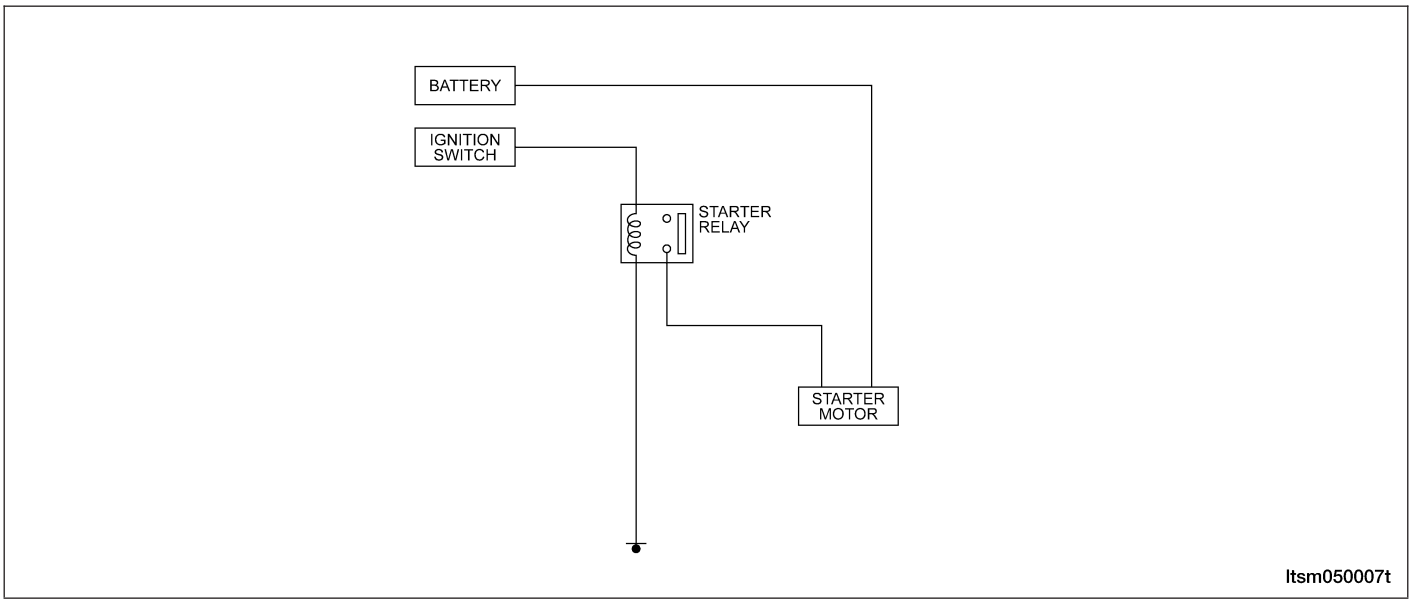

2.4L

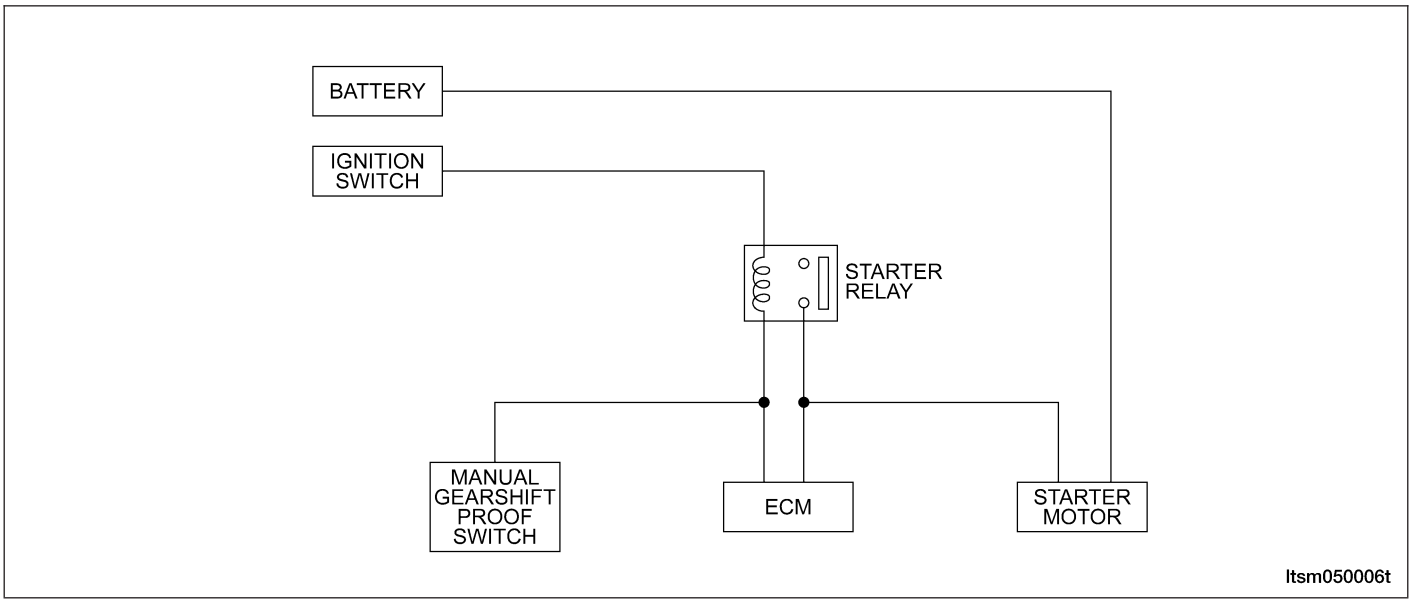

The starting system consists of the following components:
- Starter motor (including an integral starter solenoid)
- Battery
- Battery cables
- Ignition switch and key lock cylinder
- Wire harnesses and connections
- Starter relay and fuse
- Charge fuse

Downloaded from www.Manualslib.com manuals search engine

Operation

The battery, starting and charging systems operate in conjunction with one another, and must be tested as a complete system. For correct operation of starting/charging systems, all components used in these 3 systems must perform within specifications. When attempting to diagnose any of these systems, it is important that you keep their interdependency in mind. These components form two separate circuits, a high amperage circuit that feeds the starter motor up to 150 amps, and a control circuit that operates on less than 20 amps.

Specifications

Torque Specifications

DESCRIPTION	TORQUE (N·m)
Starter Mounting Bolts	30
Battery Positive Cable Nut	15

Special Tools

Digital Multimeter Fluke 15B & 17B	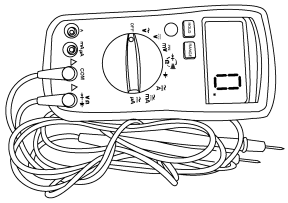 besm030002

Downloaded from www.Manualslib.com manuals search engine

Electrical Schematics

Starting System (Page 1 of 2)

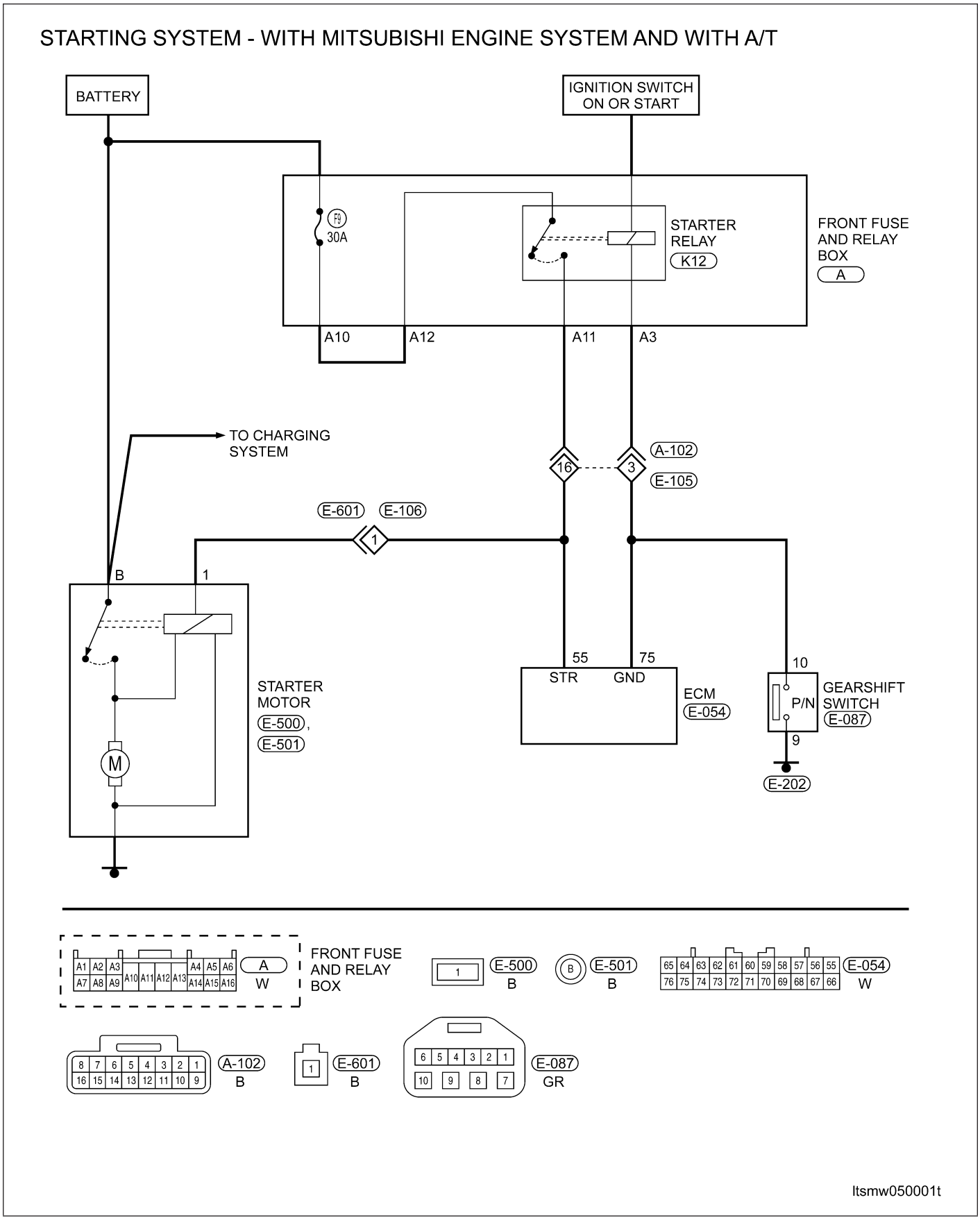

Downloaded from www.Manualslib.com manuals search engine

Starting System (Page 2 of 2)

STARTING SYSTEM - WITH ACTECO ENGINE SYSTEM

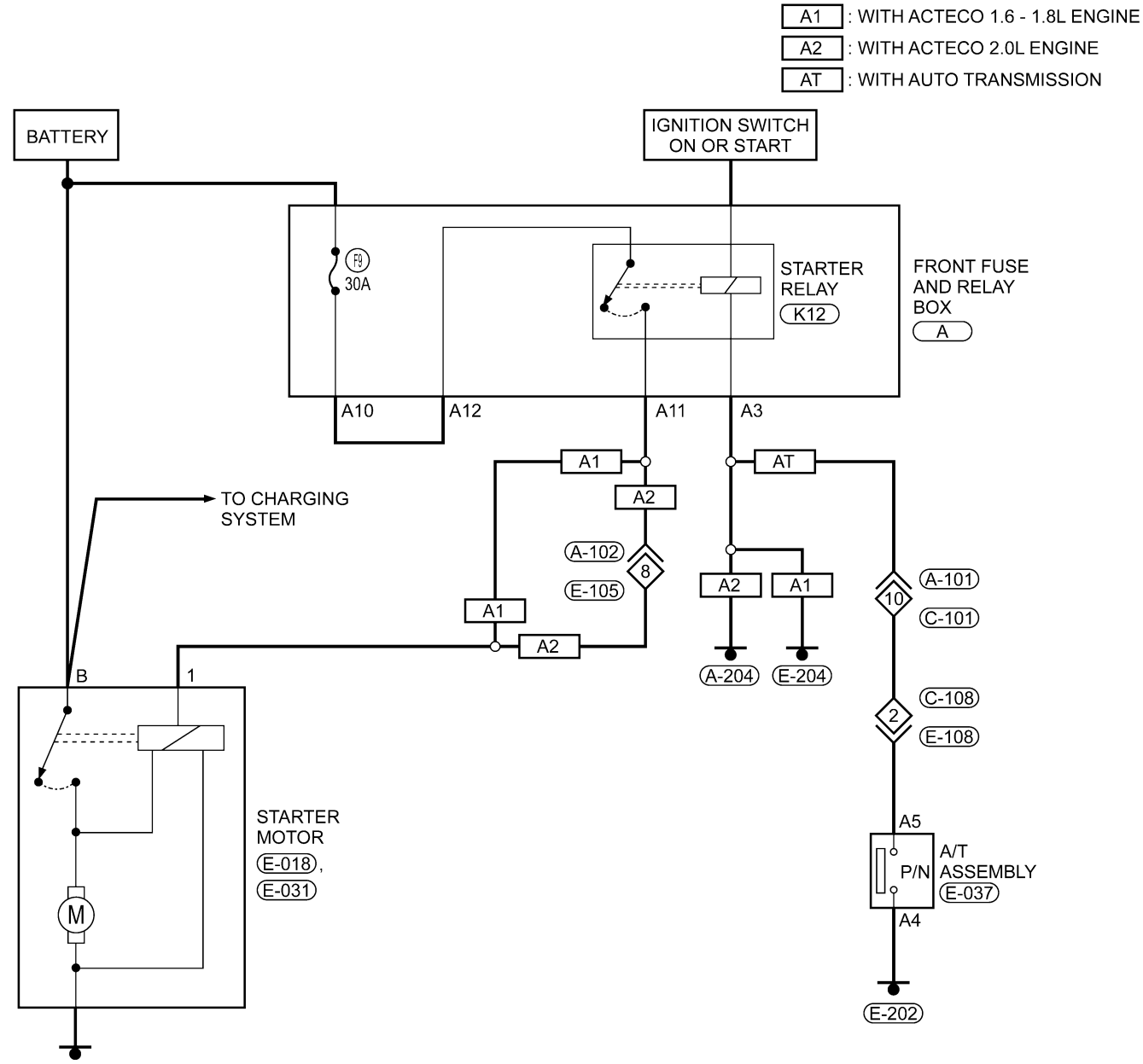

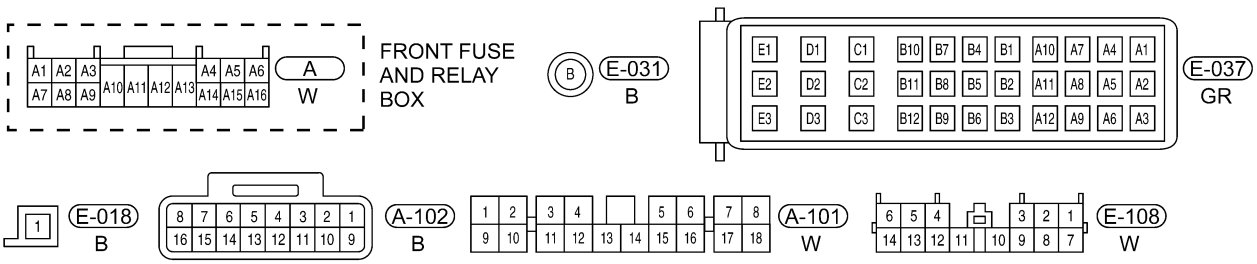

ltsmw050003t

Downloaded from www.Manualslib.com manuals search engine

DIAGNOSIS AND TESTING

Starter Motor Bench Test

Starter motor operation can be confirmed by performing the following free-running bench test. This test can only be performed with the starter motor removed from the vehicle.

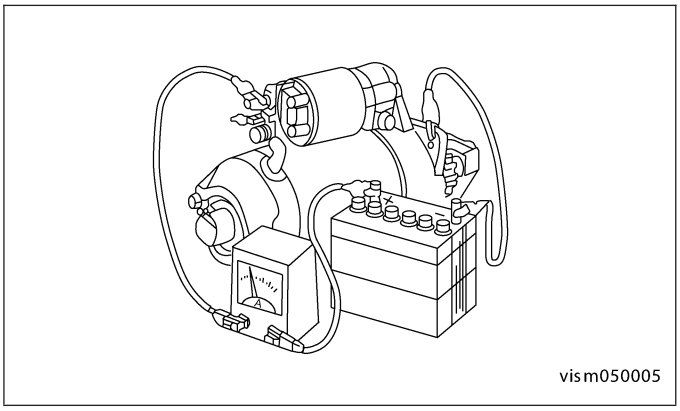

1. Remove the starter motor from the vehicle (See Starter Motor Removal & Installation in Section 05 Starting and Charging).
2. Mount the starter motor securely in a soft-jawed bench vise. The vise jaws should be clamped on the mounting flange of the starter motor (never clamp on the starter motor by the field frame).
3. Connect a suitable volt-ampere tester and a 12 V battery to the starter motor in series, and set the ammeter to the 100 A scale.
4. Install a jumper wire from the solenoid terminal to the solenoid battery terminal. The starter motor should operate. If the starter motor fails to operate, replace the faulty starter motor assembly.
5. Adjust the carbon pile load of the tester to obtain the free running test voltage.
6. Note the reading on the ammeter and compare this reading to the free-running test maximum amperage draw.
7. If the ammeter reading exceeds the maximum amperage draw specification, replace the faulty starter motor assembly.

Starter Solenoid Test

This test can only be performed with the starter motor removed from the vehicle.

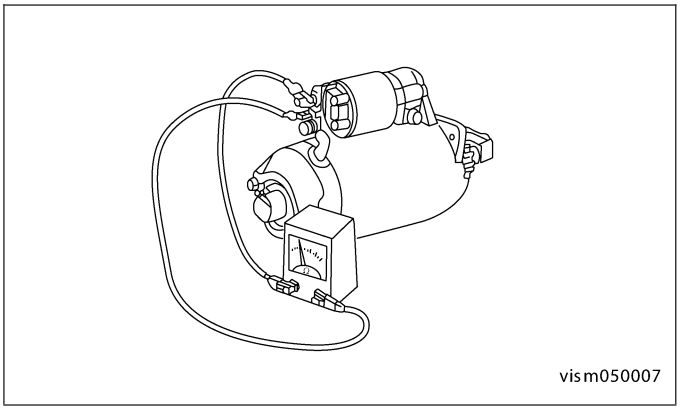

1. Remove the starter motor from the vehicle (See Starter Motor Removal & Installation in Section 05 Starting and Charging).
2. Disconnect the wire from the solenoid field coil terminal.
3. Check the solenoid for continuity between the solenoid terminal and the solenoid field coil terminal with a continuity tester. There should be continuity. If there is continuity, go to Step 4. If not, replace the faulty starter motor assembly.
4. Using a continuity tester, check for continuity between the solenoid terminal and the solenoid case. There should be continuity. If not, replace the faulty starter motor assembly.

Downloaded from www.Manualslib.com manuals search engine

ON-VEHICLE SERVICE

Battery

Description

This vehicle is equipped with a single 12 V battery. All of the components of the battery system are located within the engine compartment of the vehicle. The battery system for this vehicle contains the following components:

- Battery - The storage battery provides a reliable means of storing a renewable source of electrical energy within the vehicle.
- Battery Cables - The battery cables connect the positive and negative charged battery terminal posts to the vehicle electrical system.
- Battery Hold Down - The battery hold down hardware secures the battery in the battery tray.
- Battery Tray - The battery tray provides a secure mounting location in the vehicle for the battery and an anchor point for the battery hold down hardware.

Operation

The battery is designed to store electrical energy in a chemical form. When an electrical load is applied to the terminals of the battery, an electrochemical reaction occurs. This reaction causes the battery to discharge electrical current from its terminals. As the battery discharges, a gradual chemical change takes place within each cell. The sulfuric acid in the electrolyte combines with the plate materials, causing both plates to slowly change to lead sulfate. At the same time, oxygen from the positive plate material combines with hydrogen from the sulfuric acid, causing the electrolyte to become mainly water. The chemical changes within the battery are caused by the movement of excess or free electrons between the positive and negative plate groups. This movement of electrons produces a flow of electrical current through the load device attached to the battery terminals.

Removal & Installation

1. Disconnect the negative battery cable.
2. Disconnect the positive battery cable.
3. Remove the battery hold down retaining nuts (1).

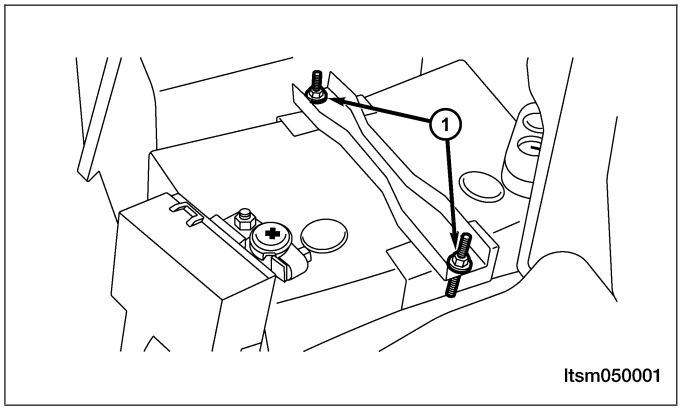

4. Remove the battery.
5. Installation is in the reverse order of removal.

Downloaded from www.Manualslib.com manuals search engine

Positive Battery Cable

Removal & Installation

1. Disconnect the negative battery cable.
2. Disconnect the positive battery cable.
3. Remove the battery cable from the B+ terminal of the generator.
4. Remove the battery cable from the B+ terminal of the starter motor.
5. One at a time, trace the battery cable retaining push pins, fasteners and routing clamps until the cables are free from the vehicle.
6. Remove the battery cable from the engine compartment.
7. Installation is in the reverse order of removal.

Negative Battery Cable

Removal & Installation

1. Disconnect the negative battery cable.
2. Remove the bolts securing the negative cable to the body ground and the transaxle.
3. One at a time, trace the battery cable retaining push pins, fasteners and routing clamps until the cables are free from the vehicle.
4. Remove the battery cable from the engine compartment.
5. Installation is in the reverse order of removal.

Battery Hold Down

Removal & Installation

1. Remove the retaining nuts (1).

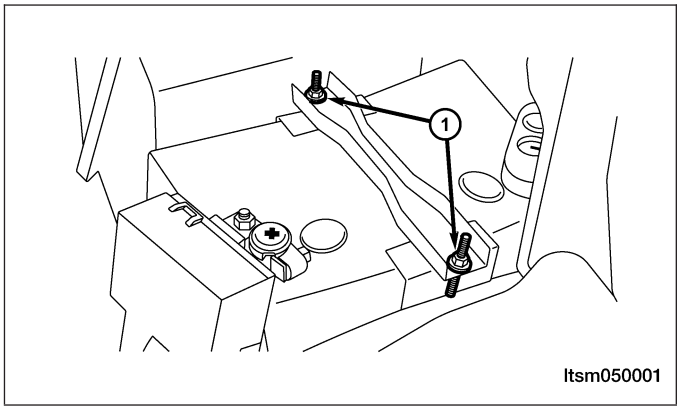

2. Remove the battery hold down.
3. Installation is in the reverse order of removal.

Downloaded from www.Manualslib.com manuals search engine

Battery Tray

Removal & Installation

1. Disconnect the negative battery cable.
2. Disconnect the positive battery cable.
3. Remove the battery hold down.
4. Remove the battery.
5. Remove the three bolts (1) from the battery tray.
6. Lift the battery tray out of the engine compartment and remove from the vehicle.
7. Installation is in the reverse order of removal.

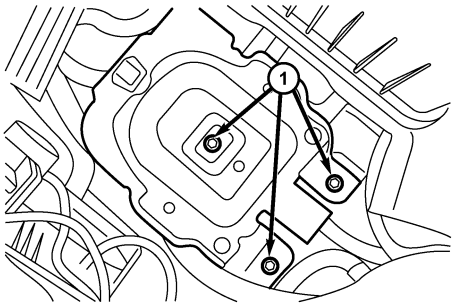

ltsm050002

Starter Motor Assembly

Description

The starter motor is mounted with two bolts to the transaxle housing and is located on the side of the engine. The starter motor incorporates several features to create a reliable, efficient, compact, lightweight and powerful unit. The electric motor of the starter features electromagnetic field coils wound around pole shoes, and brushes contact the motor commutator. The starter motor is serviced only as a unit and cannot be repaired.

Operation

The starter motor is equipped with a planetary gear reduction system. The planetary gear reduction system consists of a gear that is integral to the output end of the electric motor armature shaft that is in continual engagement with a larger gear that is splined to the input end of the starter pinion gear shaft. This feature makes it possible to reduce the dimensions of the starter. At the same time, it allows higher armature rotational speed and delivers increased torque through the starter pinion gear to the starter ring gear.

Removal & Installation - 1.6L & 1.8L & 2.0L

1. Disconnect the negative battery cable.
2. Disconnect the electrical connector from the starter.
3. Remove the bolts connecting the engine oil dipstick to the cylinder block and intake manifold.
4. Remove the engine oil dipstick.

NOTE :
After removing the engine oil dipstick, you should immediately plug the hole in the cylinder block in order to prevent any debris from entering the engine.

5. Remove the starter solenoid nut (1) from the starter.
   (Tighten: Starter solenoid nut to 10 N·m)

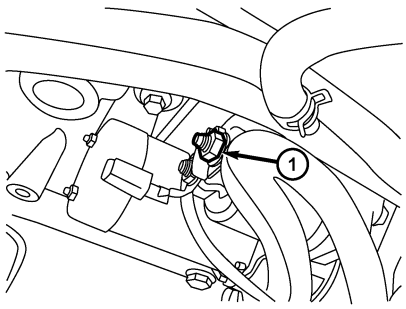

besm050004

Downloaded from www.Manualslib.com manuals search engine

6. Remove the two starter mounting bolts (1) connecting the starter and transaxle.
   (Tighten: Starter mounting bolts to 30 N·m)
7. Remove the starter from the engine.
8. Installation is in the reverse order of removal.

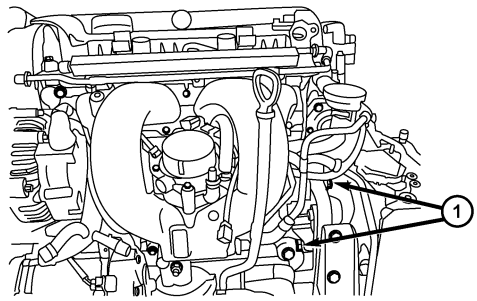

vism050006

Removal & Installation - 2.4L

1. Disconnect the negative battery cable.
2. Remove the exhaust manifold (See Exhaust Manifold Removal & Installation in Section 02 Engine).
3. Disconnect the electrical connector from the starter.
4. Remove the starter solenoid nuts from the starter.
   (Tighten: Starter solenoid nuts to 10 N·m)
5. Remove the two starter mounting bolts (1) connecting the starter and transaxle.
   (Tighten: Starter mounting bolts to 30 N·m)
6. Remove the starter from the engine.
7. Installation is in the reverse order of removal.

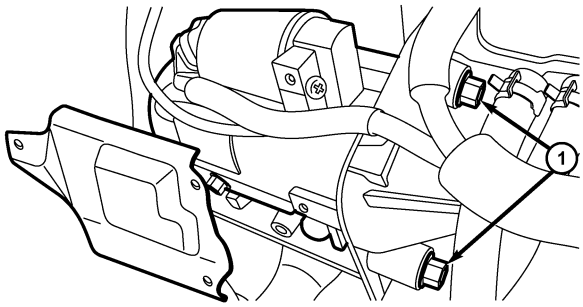

ltsm050005

Downloaded from www.Manualslib.com manuals search engine

CHARGING SYSTEM

GENERAL INFORMATION 05-12
- Description 05-12
- Operation 05-12
- Specifications 05-13
- Special Tools 05-13
- Electrical Schematics 05-14

DIAGNOSIS & TESTING 05-16
- Generator Noise 05-16

ON-VEHICLE SERVICE 05-17

Generator 05-17
- Removal & Installation - 1.6L & 1.8L & 2.0L 05-17
- Removal & Installation - 2.4L 05-18
- Generator Inspection 05-18

Downloaded from www.Manualslib.com manuals search engine

GENERAL INFORMATION

Description

1.6L & 1.8L & 2.0L

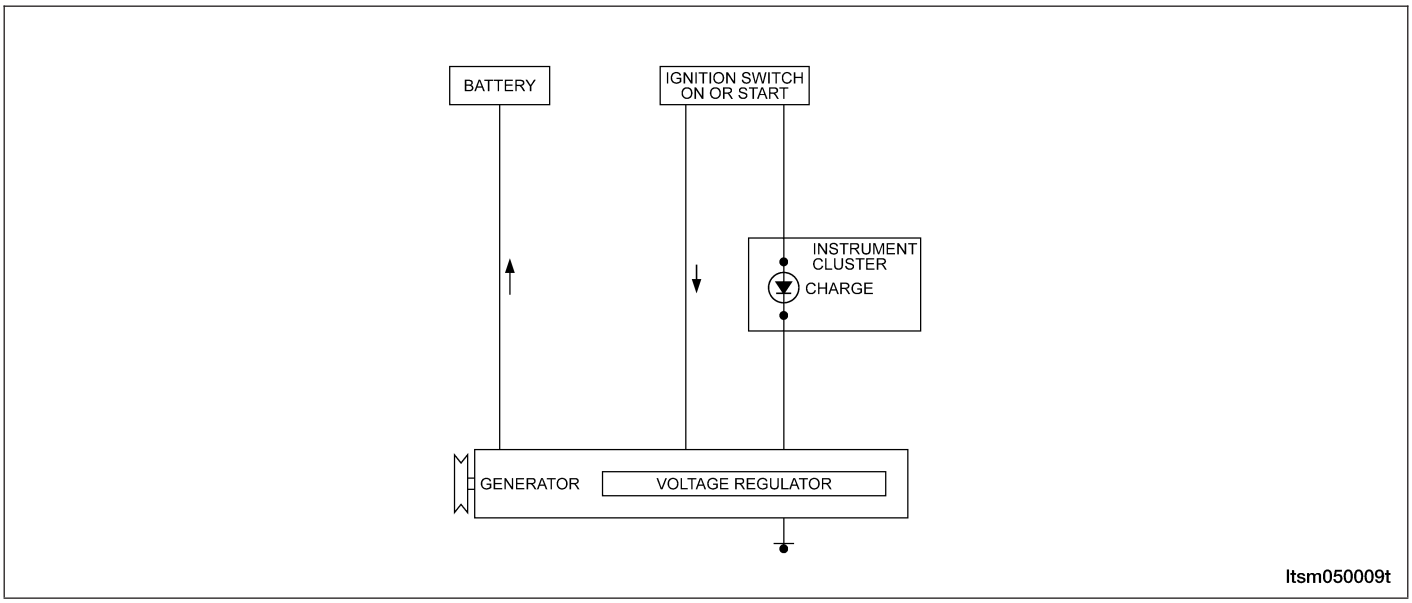

2.4L

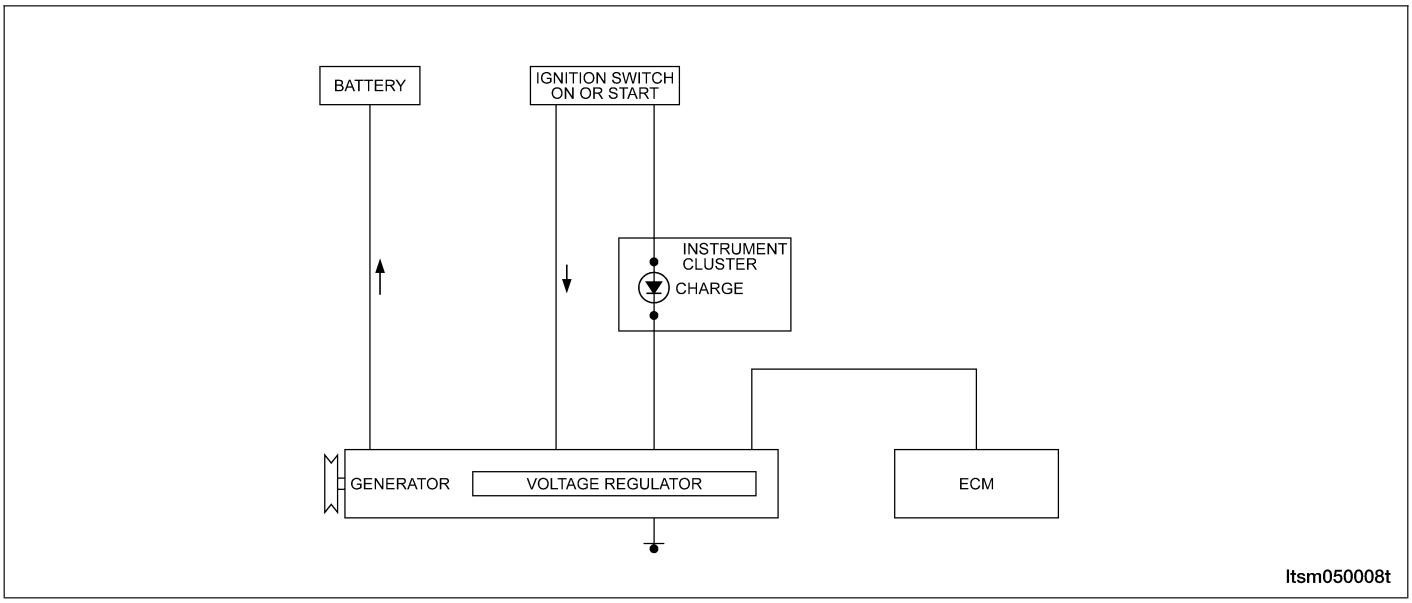

The generator is belt-driven by the engine. It is serviced only as a complete assembly. If the generator fails for any reason, the entire assembly must be replaced. The generator produces DC voltage.

Operation

As the energized rotor begins to rotate within the generator, the spinning magnetic field induces a current into the windings of the stator coil.

The Y-type stator winding connections deliver the induced AC current to 3 positive and 3 negative diodes for rectification. From the diodes, rectified DC current is delivered to the vehicle's electrical system through the generator, battery, and ground terminals.

Downloaded from www.Manualslib.com manuals search engine

Specifications

Torque Specifications

DESCRIPTION	TORQUE (N·m)
Generator Cable Nut	13
Generator Mounting Bolts	30
Generator Adjustment Bracket Bolts	25

Special Tools

Digital Multimeter Fluke 15B & 17B	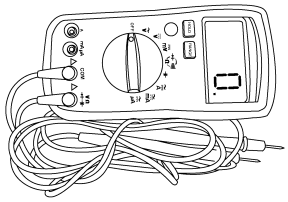 besm030002

Downloaded from www.Manualslib.com manuals search engine

Electrical Schematics

Charging System (Page 1 of 2)

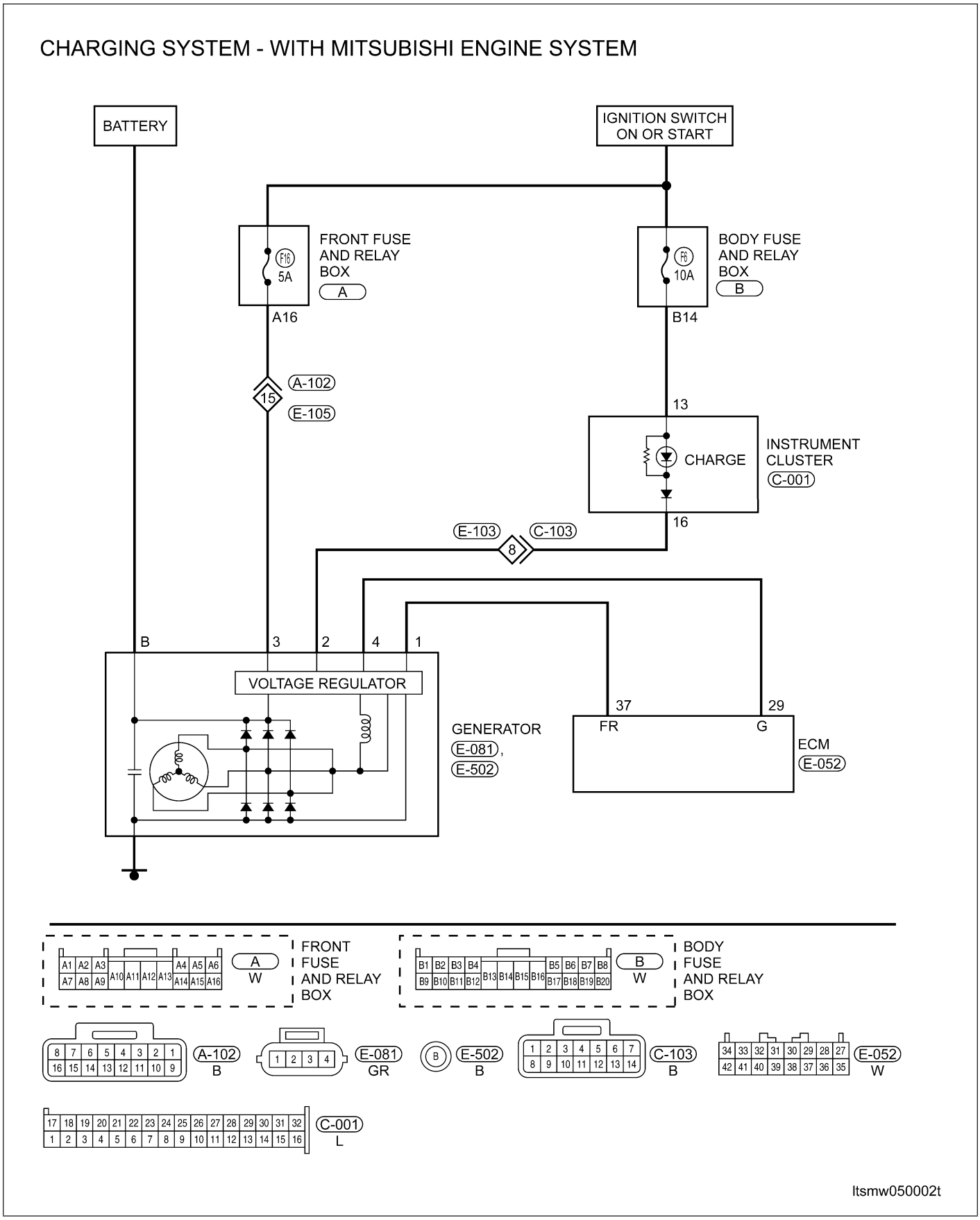

Downloaded from www.Manualslib.com manuals search engine

Charging System (Page 2 of 2)

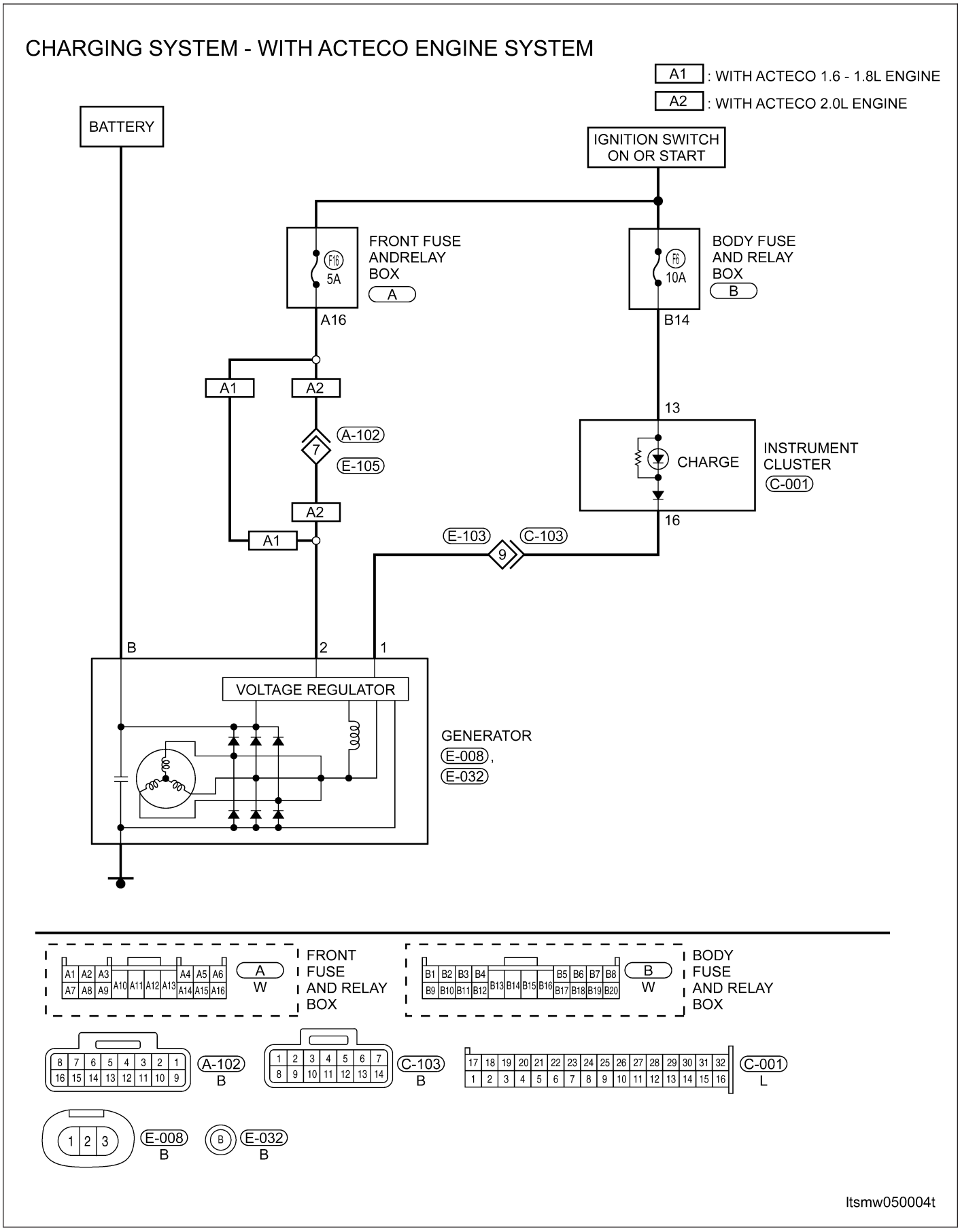

Downloaded from www.Manualslib.com manuals search engine

DIAGNOSIS & TESTING

Generator Noise

Noise emitting from the generator may be caused by the following:

- Worn, loose or defective bearings
- Loose or defective drive pulley
- Incorrect, worn, damaged or misadjusted drive belt
- Loose mounting bolts
- Misaligned drive pulley
- Defective stator
- Damaged internal fins

Downloaded from www.Manualslib.com manuals search engine

Generator

Removal & Installation - 1.6L & 1.8L & 2.0L

1. Disconnect the negative battery cable.
2. Disconnect the generator electrical connector.
3. Remove the engine drive belt (See Drive Belt Removal & Installation in Section 02 Engine).
4. Remove the generator cable nut (1) connecting the positive cable to the generator.
   (Tighten: Generator cable nut to 13 N·m)

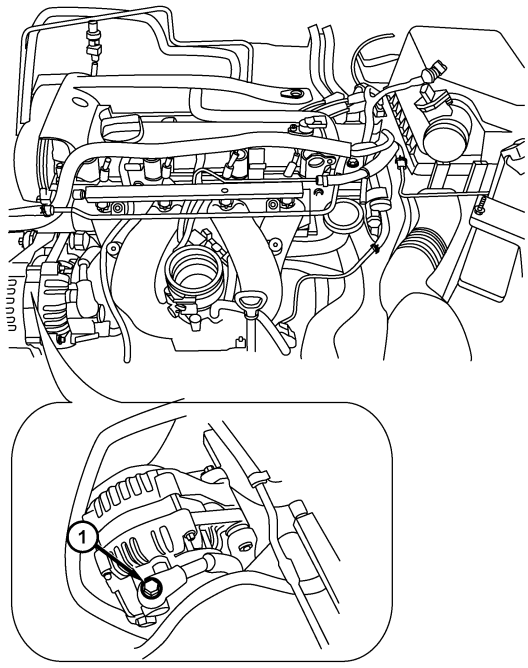

besm050002

5. Remove two generator mounting bolts (1).
   (Tighten: Generator mounting bolts to 30 N·m)
6. Remove the generator from the engine.
7. Installation is in the reverse order of removal.

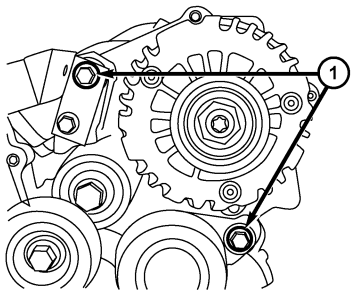

besm050003

Downloaded from www.Manualslib.com manuals search engine

Removal & Installation - 2.4L

1. Disconnect the negative battery cable.
2. Remove the engine drive belt (See Drive Belt Removal & Installation in Section 02 Engine).
3. Remove the generator cable nut (1) connecting the positive cable to the generator.
   (Tighten: Generator cable nut to 10 N·m)
4. Disconnect the electrical connector (2).

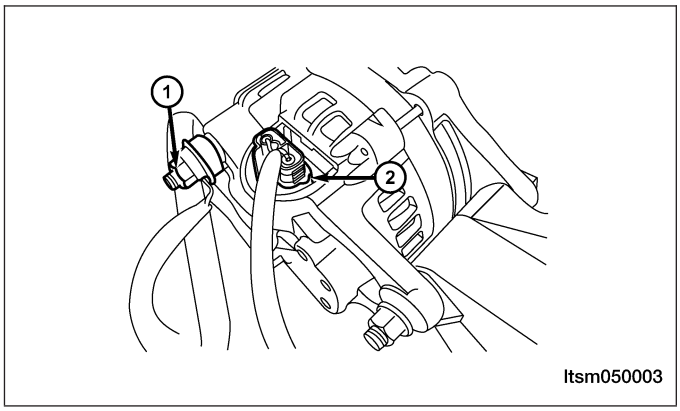

5. Remove the two generator adjustment bracket bolts (1).
   (Tighten: Generator adjustment bracket bolts to 25 N·m)

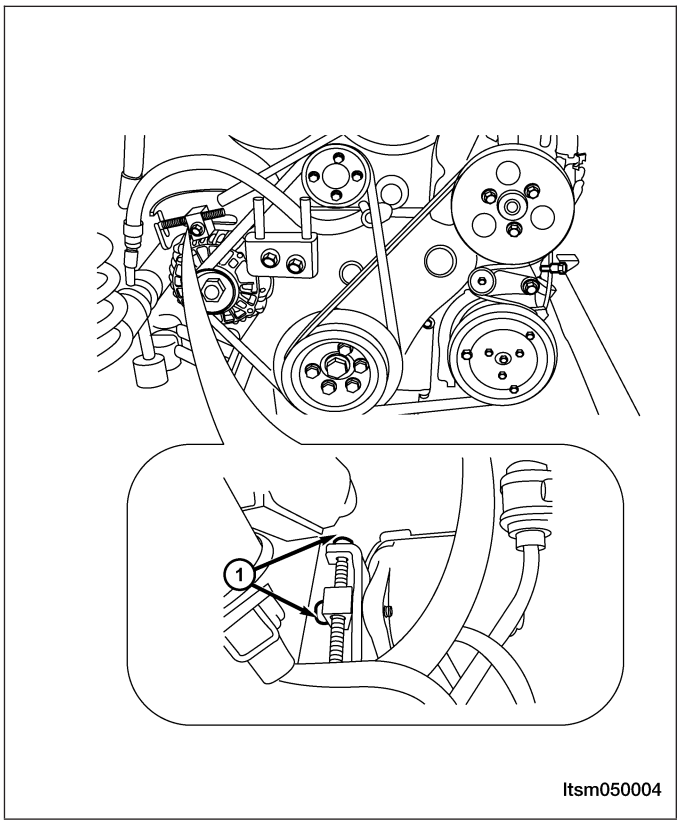

6. Remove the generator from the engine.
7. Installation is in the reverse order of removal.

Generator Inspection

1. Start the engine.
   NOTE: If the battery warning lamp illuminates, there may be a problem with the charging system.
2. With the engine running, check the output voltage of the generator with a digital multimeter (note the voltage).
3. If the voltage is between 14.1 V - 14.7 V, the generator is good.

Downloaded from www.Manualslib.com manuals search engine

COOLING
06

CONTENTS

page

Cooling System **06-1**

COOLING SYSTEM

GENERAL INFORMATION 06-2
- Description 06-2
- Operation 06-4
- Specifications 06-5
- Special Tools 06-5
- Electrical Schematics 06-6

DIAGNOSIS AND TESTING 06-11
- Cooling System Pressure Test 06-11
- Cooling System Concentration Test 06-11
- Cooling System Troubleshooting Chart 06-12

ON-VEHICLE SERVICE 06-13

Cooling System Draining and Filling 06-13
- Cooling System Draining Procedure 06-13
- Cooling System Filling Procedure 06-13

Thermostat 06-14
- Description 06-14
- Operation 06-14
- Removal & Installation - 1.6L & 1.8L & 2.0L 06-14
- Removal & Installation - 2.4L 06-15
- Thermostat Inspection 06-16

Coolant Pump 06-16
- Removal & Installation - 1.6L & 1.8L & 2.0L 06-16
- Removal & Installation - 2.4L 06-17
- Coolant Pump Inspection 06-17

Radiator 06-17
- Description 06-17
- Operation 06-17
- Removal & Installation 06-17

Cooling Fan 06-18
- Description 06-18
- Operation 06-19
- Removal & Installation 06-19
- Cooling Fan Inspection 06-19

Downloaded from www.Manualslib.com manuals search engine

Description

Water Pump Assembly - 1.6L & 1.8L & 2.0L

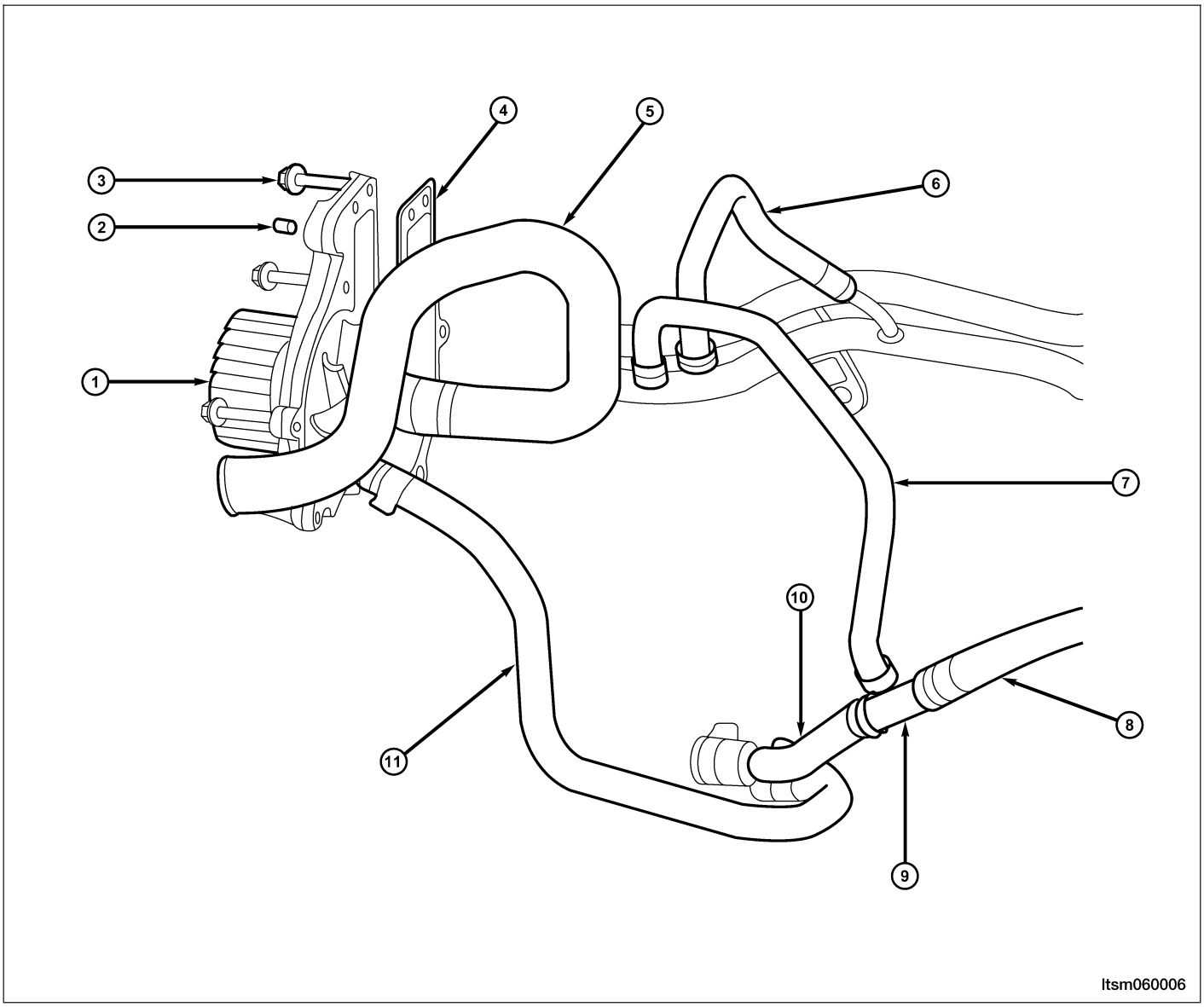

1 - Water Pump Assembly	7 - Restrictor Inlet Hose
2 - Water Pump Alignment Pin	8 - Engine Oil Cooler Inlet Hose (Part 1)
3 - Water Pump Bolt	9 - Three Way Connector
4 - Gasket	10 - Engine Oil Cooler Inlet Hose (Part 2)
5 - Engine Inlet Hose From Radiator	11 - Engine Oil Cooler Outlet Hose
6 - Restrictor Outlet Hose	

Downloaded from www.Manualslib.com manuals search engine

Thermostat Housing Assembly - 1.6L & 1.8L & 2.0L

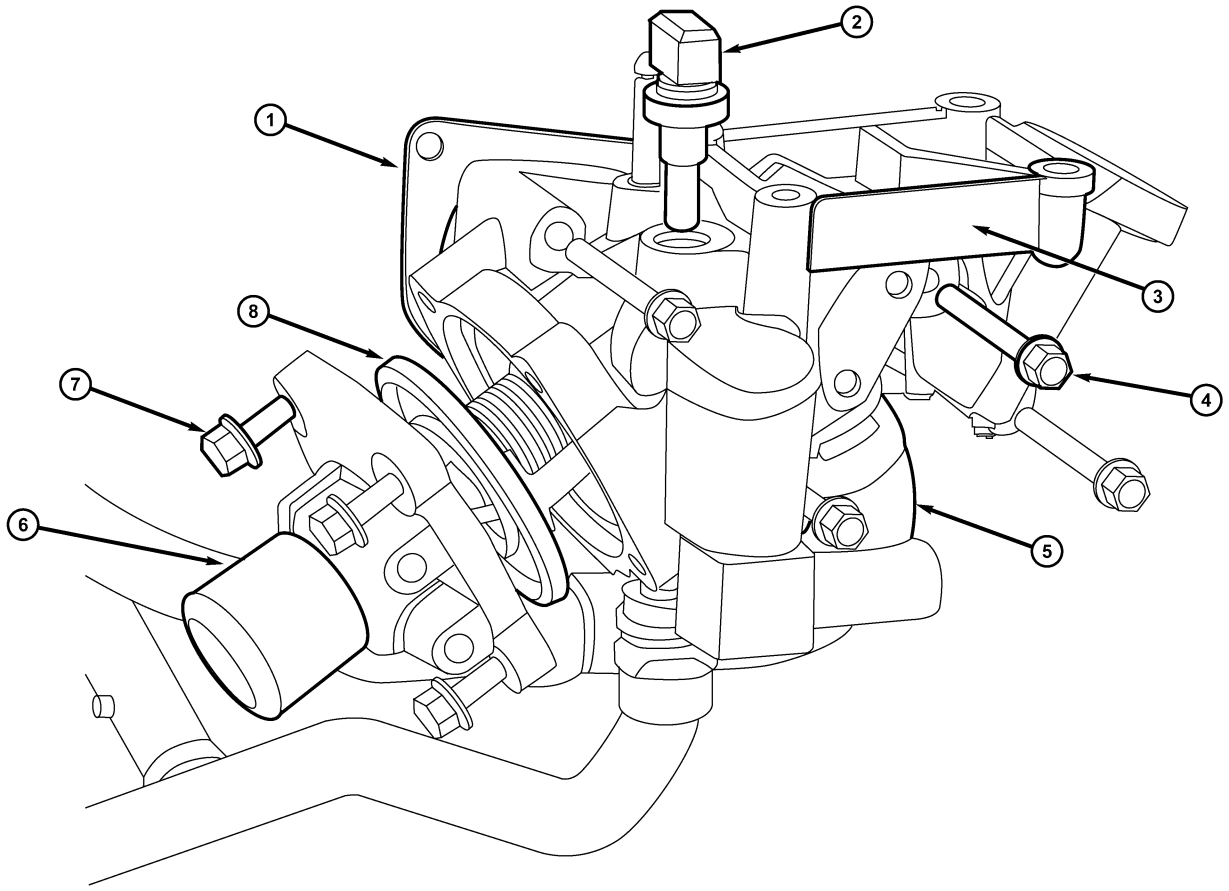

ltsm060007

1 - Gasket	5 - Minor Cycle Water Hose
2 - Coolant Temperature Sensor	6 - Thermostat Housing Cover
3 - Thermostat Housing Assembly	7 - Thermostat Housing Cover Mounting Bolts
4 - Thermostat Housing Mounting Bolts	8 - Thermostat Assembly

The cooling system regulates engine operating temperature. It allows the engine to reach normal operating temperature as soon as possible, maintains normal operating temperature and prevents overheating.

The cooling system also provides a means of heating the passenger compartment. The cooling system is pressurized and uses a centrifugal water pump to circulate coolant throughout the system.

The cooling system consists of the following components:
- Radiator
- Coolant
- Coolant pump
- Electric cooling fans
- Electric cooling fans control module
- Thermostat
- Coolant reservoir

Downloaded from www.Manualslib.com manuals search engine

- Hoses and clamps
- Coolant temperature sensor
- Coolant temperature sensor (for instrument cluster) (with 2.4L engine)
- Heater core

Operation

Engine Coolant Flow Diagram - 1.6L & 1.8L & 2.0L

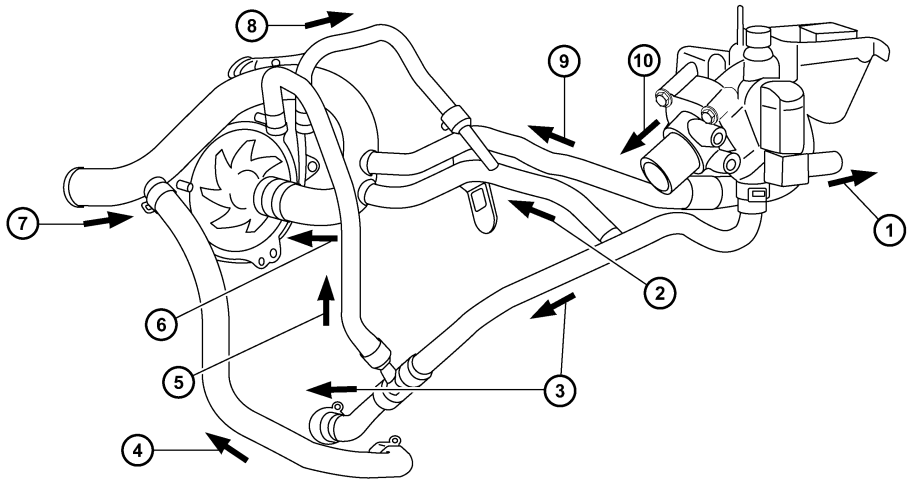

ltsm060005

1 - To Heater Core	6 - To Engine
2 - Heater Core Return	7 - Radiator Return
3 - To Oil Cooler	8 - Restrictor Return
4 - Oil Cooler Return	9 - Minor Cycle Coolant Hose
5 - To Restrictor	10 - To Radiator

The primary purpose of a cooling system is to maintain engine temperature in a range that will provide satisfactory engine performance and emission levels under all expected driving conditions. It also provides hot coolant for heater performance and cooling for automatic transmission oil. This is done by transferring heat from engine metal to coolant, moving the heated coolant to the radiator, and then transferring the heat to the ambient air.

Downloaded from www.Manualslib.com manuals search engine

Specifications

Torque Specifications

DESCRIPTION	TORQUE (N·m)
Coolant Pump Mounting Bolts	14
Radiator Support Mounting Bolts	5
Coolant Fan Mounting Bolts	5
Thermostat Mounting Bolts	13

Fluid Specifications

DESCRIPTION	CAPACITY (L)
Cooling System	7.0

Special Tools

Cooling System Pressure Tester	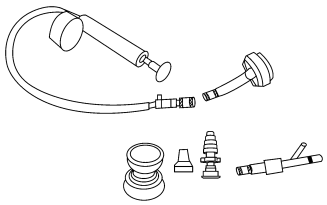 besm060005

Downloaded from www.Manualslib.com manuals search engine

Electrical Schematics

Cooling System (Page 1 of 5)

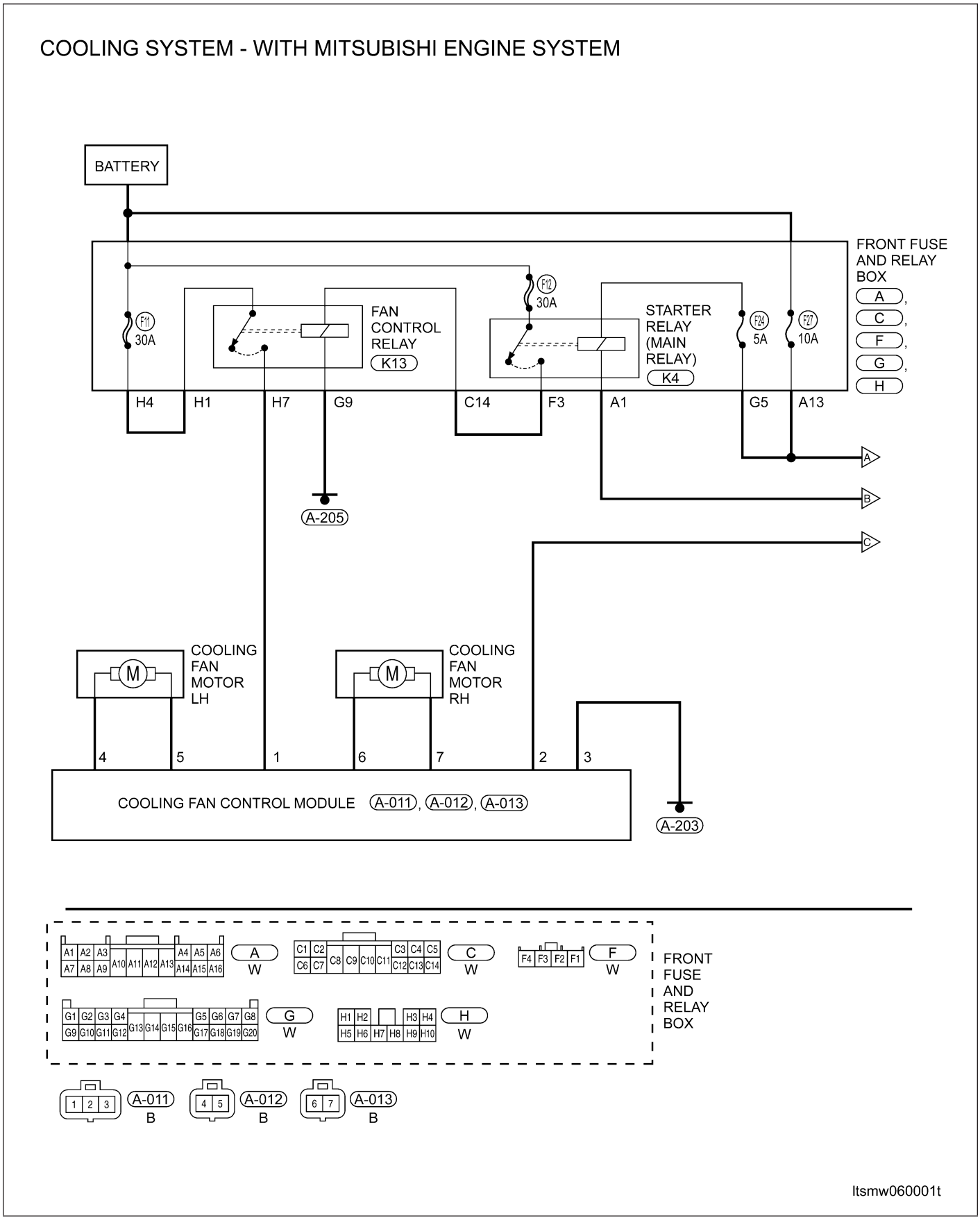

Downloaded from www.Manualslib.com manuals search engine

Cooling System (Page 2 of 5)

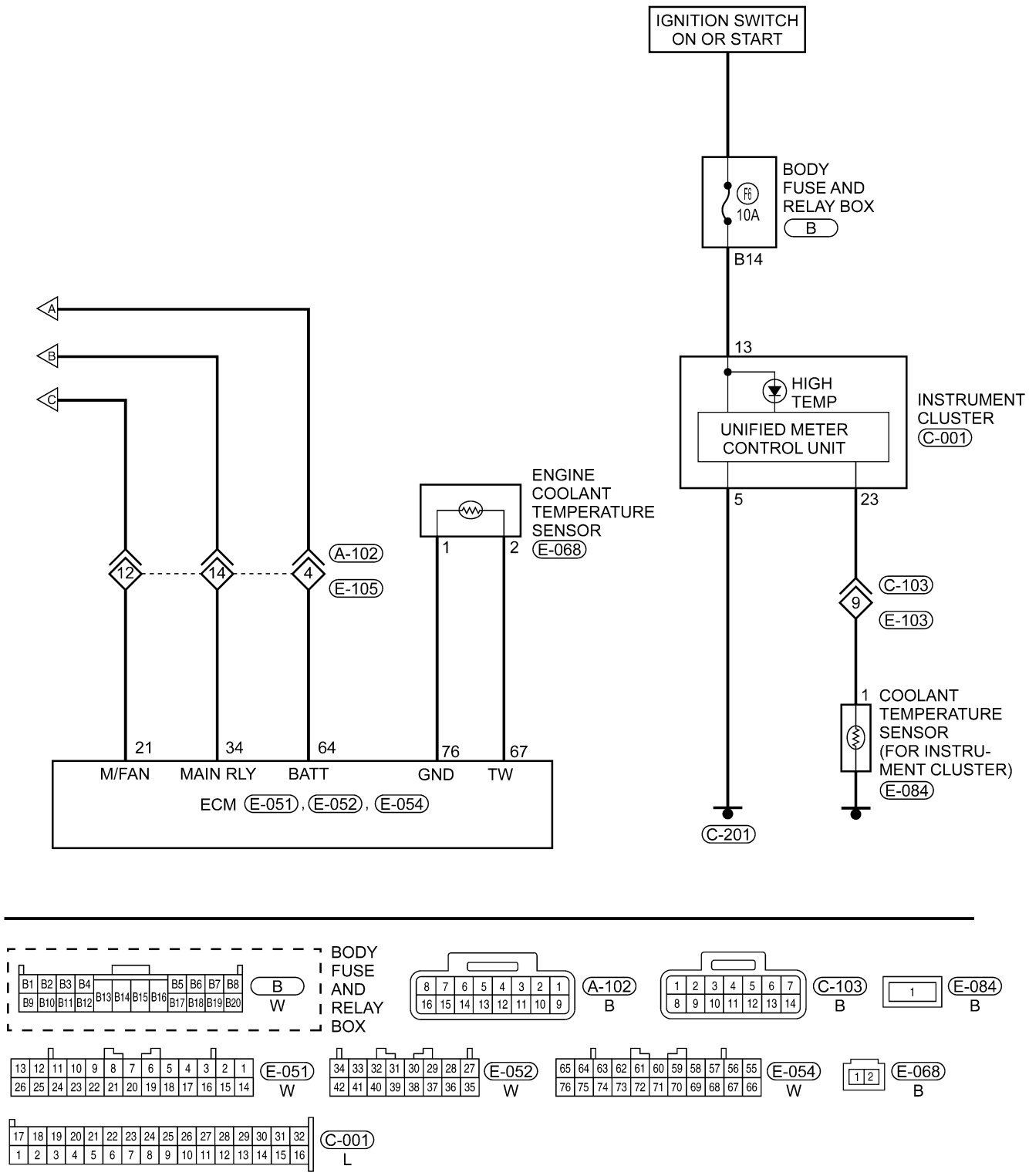

Downloaded from www.Manualslib.com manuals search engine

Cooling System (Page 3 of 5)

COOLING SYSTEM - WITH ACTECO ENGINE SYSTEM

A1 : WITH ACTECO 1.6L - 1.8L ENGINE SYSTEM

A2 : WITH ACTECO 2.0L ENGINE SYSTEM

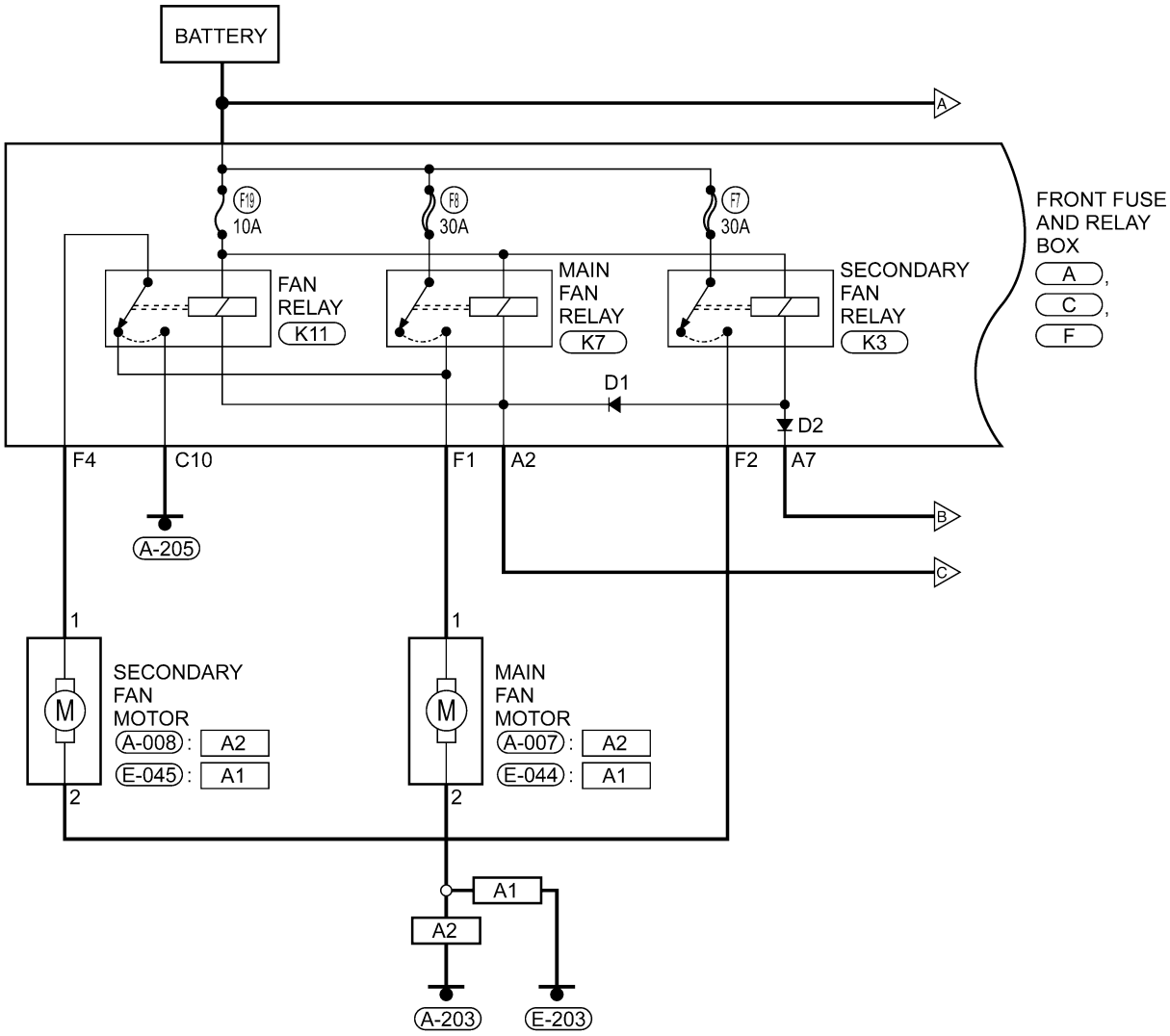

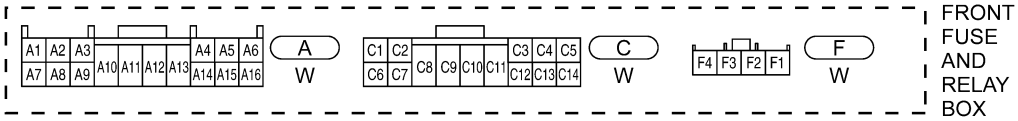

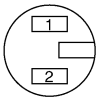

A-007 , E-044
B B

A-008 , E-045
B B

ltsmw060003t

Downloaded from www.Manualslib.com manuals search engine

Cooling System (Page 4 of 5)

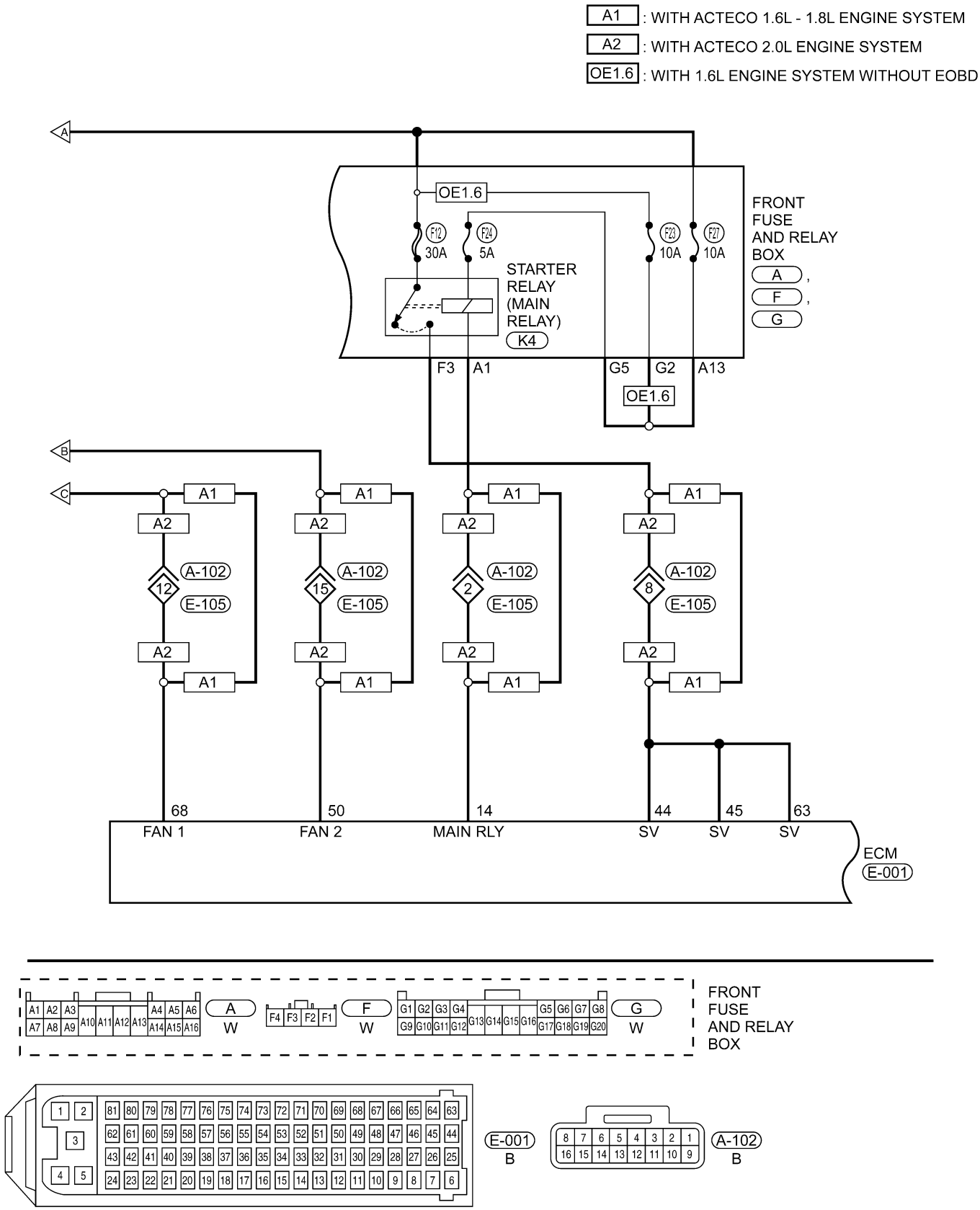

ltsmw060004t

Downloaded from www.Manualslib.com manuals search engine

Cooling System (Page 5 of 5)

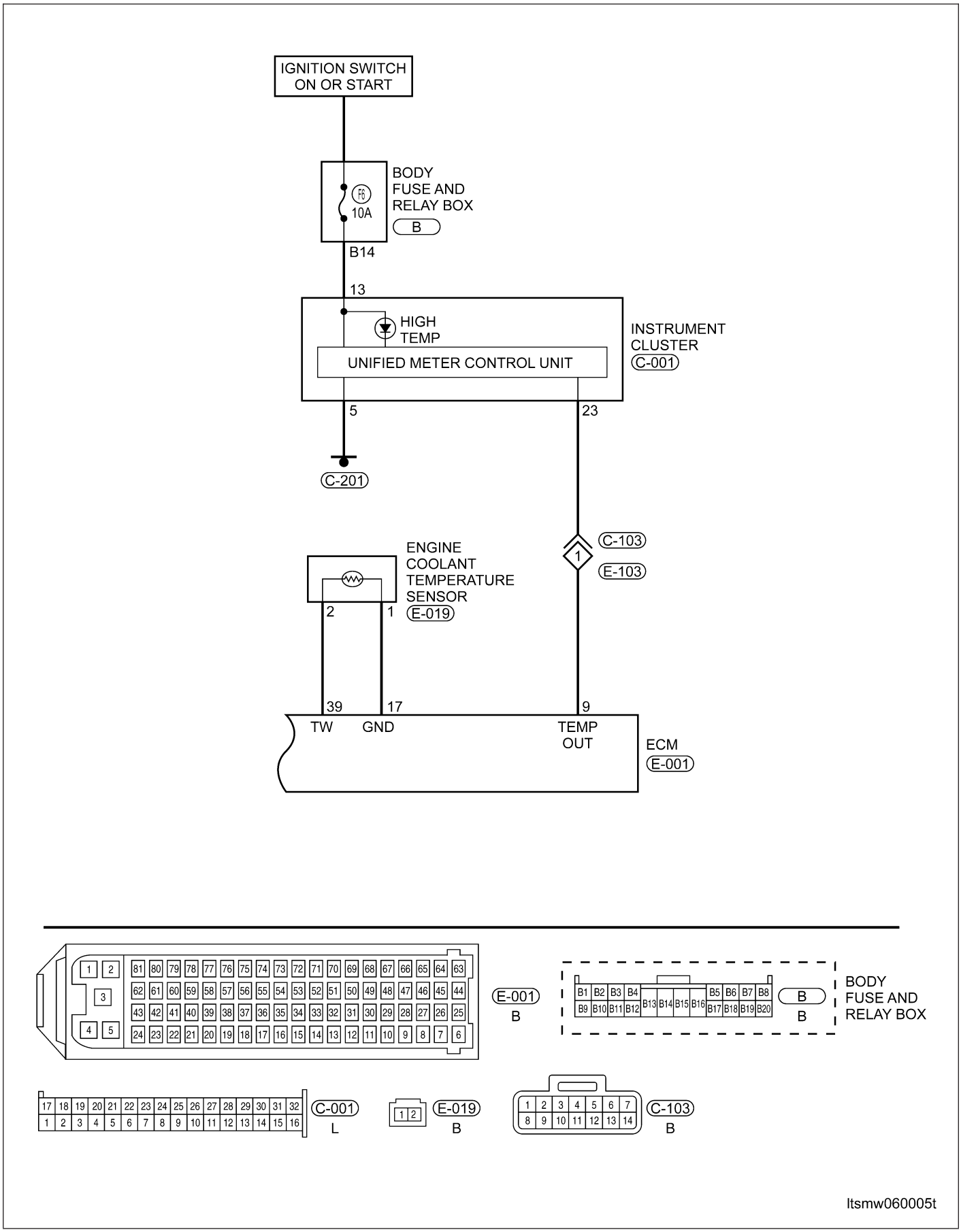

Downloaded from www.Manualslib.com manuals search engine

DIAGNOSIS AND TESTING

Cooling System Pressure Test

WARNING!

Always allow the engine to cool before opening the cooling system. Do not remove the coolant pressure relief cap when the engine is operating or the cooling system is hot. The cooling system is under pressure; steam and hot liquid can come out forcefully when the cap is loosened slightly. Failure to follow these instructions may result in serious personal injury.

CAUTION:

Do not pressurize the cooling system beyond the maximum pressure listed in the specifications table in this section, or cooling system components can be damaged.

1. Turn the engine off.
2. Check the engine coolant level. Adjust the coolant level as necessary.
3. Attach the pressure tester to the coolant recovery reservoir. Install a pressure test pump to the quick-connect fitting of the test adapter.
4. Pressurize the engine cooling system to 111 kPa. Observe the gauge reading for approximately 2 minutes. Pressure should not drop during this time. If the pressure drops within this time, inspect for leaks and repair as necessary.
5. If no leaks are found and the pressure drops, the pressure relief cap may be leaking. Install a new pressure relief cap and retest the system.
6. If no leaks are found after a new pressure relief cap is installed, and the pressure drops, the leak may be internal to the radiator transmission cooler (if equipped). Inspect the coolant for transmission fluid and the transmission fluid for coolant. Repair as necessary.
7. If there is no contamination of the coolant or transmission fluid, the leak may be internal to the engine. Inspect the coolant for engine oil and the engine oil for coolant.
8. Release the system pressure by loosening the pressure relief cap. Check the coolant level and adjust as necessary.

Cooling System Concentration Test

CAUTION:

Do not mix types of coolant, corrosion protection will be severely reduced.

Coolant concentration should be checked when any additional coolant is added to the cooling system or after a coolant drain, flush and refill. The coolant mixture offers optimum engine cooling and protection against corrosion when mixed to a freeze point of -37°C to -46°C. The use of a hydrometer or a refractometer can be used to test coolant concentration.

Downloaded from www.Manualslib.com manuals search engine

Cooling System Troubleshooting Chart

CONDITION	POSSIBLE CAUSES	CORRECTION
Loss of Coolant	· Coolant hoses or tubes · Hose clamps · Coolant pump gasket · Thermostat gasket · Thermostat housing · Radiator · Coolant reservoir · Pressure relief cap · Coolant pump leaking · Heater core · Engine gaskets (may leak internally or externally) · Cylinder block core plugs	· Replace coolant hoses or tubes · Replace hose clamps · Replace coolant pump gasket · Replace thermostat gasket · Repair/replace thermostat housing · Repair/replace radiator · Replace coolant reservoir · Replace pressure relief cap · Replace coolant pump · Replace heater core · Replace engine gaskets · Replace cylinder block core plugs
Engine Overheats	· Low coolant level · External engine coolant leak · Air lock in system · Pressure relief cap installation · Restricted airflow through the A/C condenser/radiator · Internal engine coolant leak · Coolant condition/concentration · Electric cooling fan · Radiator · Thermostat · Engine coolant temperature indicator gauge · Heater core · Coolant pump · Coolant flow restriction	· Add coolant as needed · Repair engine coolant leak · Bleed air from cooling system · Ensure pressure relief cap is installed correctly · Remove restriction from the A/C condenser/radiator · Repair internal engine coolant leak · Repair coolant condition/ concentration as needed · Replace electric cooling fan(s) · Repair/replace radiator · Replace thermostat · Verify engine coolant temperature indicator gauge operation · Replace heater core · Replace coolant pump · Repair cause of coolant flow restriction
Engine Does Not Reach Normal Operating Temperature	· Thermostat · Electric cooling fan always on · Engine coolant temperature indicator gauge	· Replace thermostat · Repair cause of electric cooling fan always on · Verify engine coolant temperature indicator gauge operation
Electric Cooling Fan(s) Does Not Operate	· Fuse and Relay Box · Wiring · Relay(s) · Fuse(s) · Engine Control Module (ECM) · Cooling fan motor(s)	· Repair/replace Fuse and Relay Box · Repair wiring · Replace relay(s) · Replace fuse(s) · Replace the ECM · Replace cooling fan motor(s)
Electric Cooling Fan(s) On All The Time	· Wiring · Relay(s) · Engine Control Module (ECM)	· Repair wiring · Replace relay(s) · Replace the ECM

Downloaded from www.Manualslib.com manuals search engine

ON-VEHICLE SERVICE

Cooling System Draining and Filling

Cooling System Draining Procedure

WARNING!

Never remove the pressure relief cap, under any conditions, while the engine is operating or hot. Failure to follow these instructions could result in personal injury or damage to the cooling system or engine. To avoid having scalding hot coolant or steam blow out of the cooling system, use extreme care when removing the pressure relief cap. Wait until the engine has cooled, then wrap a thick cloth around the pressure relief cap and turn it slowly one turn (counterclockwise). Step back while the pressure is released from the cooling system. When you are certain all the pressure has been released, using a cloth turn and remove the pressure relief cap. Failure to follow these instructions may result in serious personal injury.

Perform the following procedure when draining the cooling system.

1. Do not remove the pressure cap first.
2. With the engine cold, remove the pressure cap.
3. Raise and support the vehicle and locate the radiator drain plug.
4. Attach one end of a hose to the drain plug (1). Put the other end into a clean container. Open the drain plug and drain the coolant from the radiator.

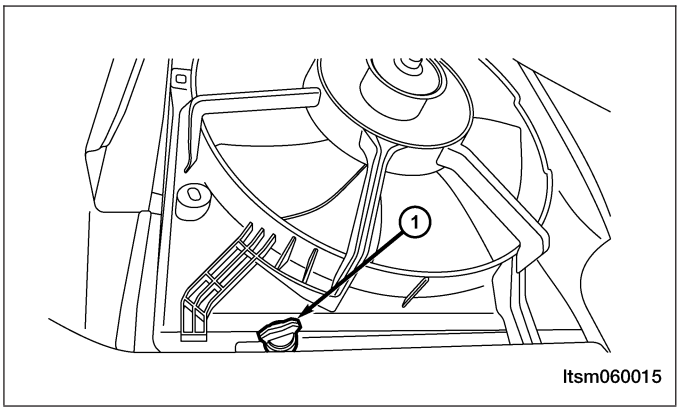

5. Tighten the radiator drain plug.

Cooling System Filling Procedure

CAUTION:
Failure to purge air from the cooling system can result in an overheating condition and severe engine damage.

Downloaded from www.Manualslib.com manuals search engine

Perform the following procedure when filling the cooling system.

1. Fill the system using the proper mixture of anti-freeze/coolant and water. Fill the coolant recovery reservoir to the ″MAX″ line and install the pressure cap.

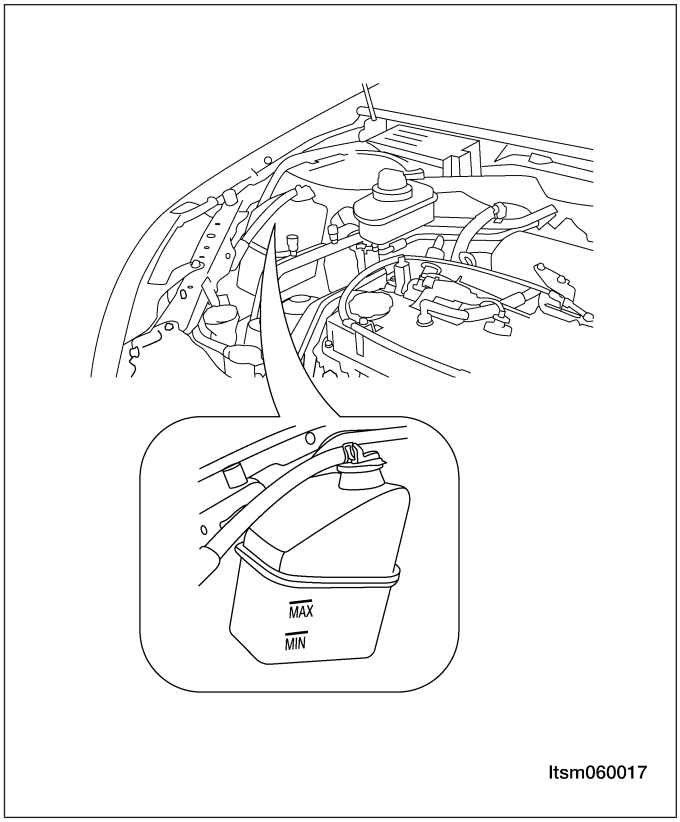

2. With the heater control in the HEAT position, start and operate the engine with coolant recovery reservoir cap in place.
3. Add coolant to the coolant recovery reservoir as necessary. Only add coolant to the coolant recovery reservoir when the engine is cold. Coolant level in a warm engine will be higher due to thermal expansion.

Thermostat

Description

The thermostat is located in the thermostat housing. The thermostat housing is located on the top of the engine between the engine and the radiator.

Operation

The thermostat controls the operating temperature of the engine by controlling the amount of engine coolant flow to the radiator. The thermostat opens when the engine coolant temperature is approximately 90°C. At this temperature, engine coolant is allowed to flow to the radiator. The thermostat provides quick engine warm up and overall temperature control. The thermostat begins to close below 90°C. The thermostat controls this by the use of a wax pellet located in a sealed container at the spring end of the thermostat. When heated, the pellet expands and overcomes the closing spring tension to force the valve to open, and when cooled, the pellet contracts and the closing spring then forces the valve to close.

Removal & Installation - 1.6L & 1.8L & 2.0L

WARNING!

Always allow the engine to cool before opening the cooling system. Do not remove the coolant pressure relief cap when the engine is operating or the cooling system is hot. The cooling system is under pressure; steam and hot liquid can come out forcefully when the cap is loosened slightly. Failure to follow these instructions may result in serious personal injury.

1. Drain the cooling system (See Cooling System Draining Procedure in Section 06 Cooling System).

Downloaded from www.Manualslib.com manuals search engine

2. Remove the thermostat mounting bolts (1).
   (Tighten: Thermostat mounting bolts to 15 N·m)

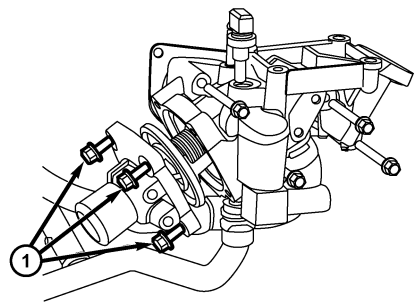

ltsm060001

3. Remove the thermostat and gasket.
4. Installation is in the reverse order of removal.

Installation Notes:

- Install a new thermostat gasket during installation.
- Verify the cooling system is filled to proper specifications.

Removal & Installation - 2.4L

WARNING!

Always allow the engine to cool before opening the cooling system. Do not remove the coolant pressure relief cap when the engine is operating or the cooling system is hot. The cooling system is under pressure; steam and hot liquid can come out forcefully when the cap is loosened slightly. Failure to follow these instructions may result in serious personal injury.

1. Drain the cooling system (See Cooling System Draining Procedure in Section 06 Cooling System).
2. Remove the thermostat mounting bolts (1).
   (Tighten: Thermostat mounting bolts to 13 N·m)
3. Remove the thermostat and gasket.
4. Installation is in the reverse order of removal.

Installation Notes:

- Install a new thermostat gasket during installation.
- Verify the cooling system is filled to proper specifications.

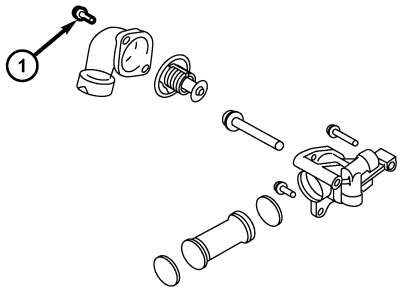

ltsm060009

Downloaded from www.Manualslib.com manuals search engine

Thermostat Inspection

1. Inspect the sealing surface of the thermostat (the seat should be tight at room temperature).
2. Inspect the opening temperature and maximum stroke of the thermostat.
   - Opening temperature of the thermostat is 87° ± 2°C
   - Maximum stroke of the thermostat is 8 mm
   - Full opening temperature of the thermostat is 104°C
3. Verify the thermostat closes 5°C lower than the opening temperature.
4. If the thermostat fails any of the inspection steps, replace the thermostat.

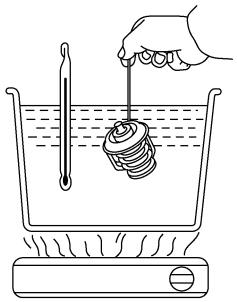

ltsm060014

Coolant Pump

Removal & Installation - 1.6L & 1.8L & 2.0L

WARNING!

Always allow the engine to cool before opening the cooling system. Do not remove the coolant pressure relief cap when the engine is operating or the cooling system is hot. The cooling system is under pressure; steam and hot liquid can come out forcefully when the cap is loosened slightly. Failure to follow these instructions may result in serious personal injury.

1. Drain the cooling system (See Cooling System Draining Procedure in Section 06 Cooling System).
2. Remove the timing belt (See Timing Belt Removal & Installation in Section 02 Engine).
3. Remove the coolant pump mounting bolts (1).
   (Tighten: Coolant pump mounting bolts to 15 N·m)

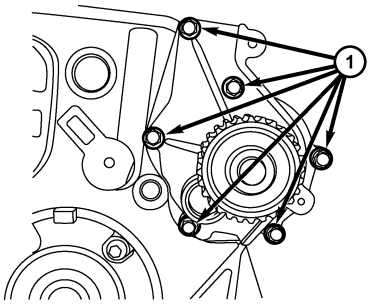

besm060001

4. Remove the water pump and gasket.
5. Installation is in the reverse order of removal.

Installation Notes:

- Install a new coolant pump gasket during installation (1).
- Verify the cooling system is filled to proper specifications.

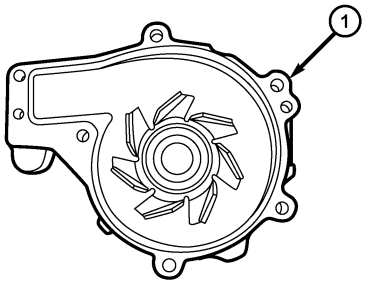

besm060002

Downloaded from www.Manualslib.com manuals search engine

Removal & Installation - 2.4L

WARNING!

Always allow the engine to cool before opening the cooling system. Do not remove the coolant pressure relief cap when the engine is operating or the cooling system is hot. The cooling system is under pressure; steam and hot liquid can come out forcefully when the cap is loosened slightly. Failure to follow these instructions may result in serious personal injury.

1. Drain the cooling system (See Cooling System Draining Procedure in Section 06 Cooling System).
2. Remove the accessory drive belt (See Accessory Drive Belt Removal & Installation in Section 02 Engine).
3. Remove the engine timing belt (See Engine Timing Belt Removal & Installation in Section 02 Engine).
4. Remove the upper balance shaft timing belt (See Upper Balance Shaft Timing Belt Removal & Installation in Section 02 Engine).
5. Remove the coolant pump mounting bolts (1).
   (Tighten: Coolant pump mounting bolts to 14 N·m)

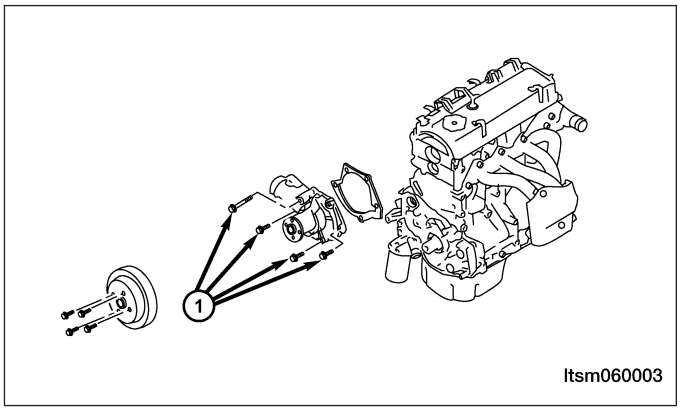

6. Remove the coolant pump and gasket.
7. Installation is in the reverse order of removal.

Installation Notes:

- Install a new coolant pump gasket during installation.
- Verify the cooling system is filled to proper specifications.

Coolant Pump Inspection

Check coolant seal of the coolant pump for coolant leak. If coolant pump bearing is loose, replace the assembly.

Radiator

Description

The radiator is a cross-flow type (horizontal tubes) with design features that provide greater strength, as well as sufficient heat transfer capabilities to keep the engine coolant within operating temperatures.

Operation

The radiator functions as a heat exchanger, using air flow across the exterior of the radiator tubes. Heat from the coolant is then transferred from the radiator into the moving air.

Removal & Installation

WARNING!

Always allow the engine to cool before opening the cooling system. Do not remove the coolant pressure relief cap when the engine is operating or the cooling system is hot. The cooling system is under pressure; steam and hot liquid can come out forcefully when the cap is loosened slightly. Failure to follow these instructions may result in serious personal injury.

Downloaded from www.Manualslib.com manuals search engine

1. Disconnect the negative battery cable.
2. Drain the cooling system (See Cooling System Draining Procedure in Section 06 Cooling System).
3. Disconnect the upper radiator hose from the radiator.
4. Disconnect the lower radiator hose from the radiator.
5. Disconnect the cooling fan electrical connectors.
6. Remove the cooling fan (See Cooling Fan Removal & Installation in Section 06 Cooling).
7. Remove the automatic transaxle fluid hose connecting bolts to radiator (only with 2.0L engine).
8. Remove the radiator support lever retaining bolts (1).

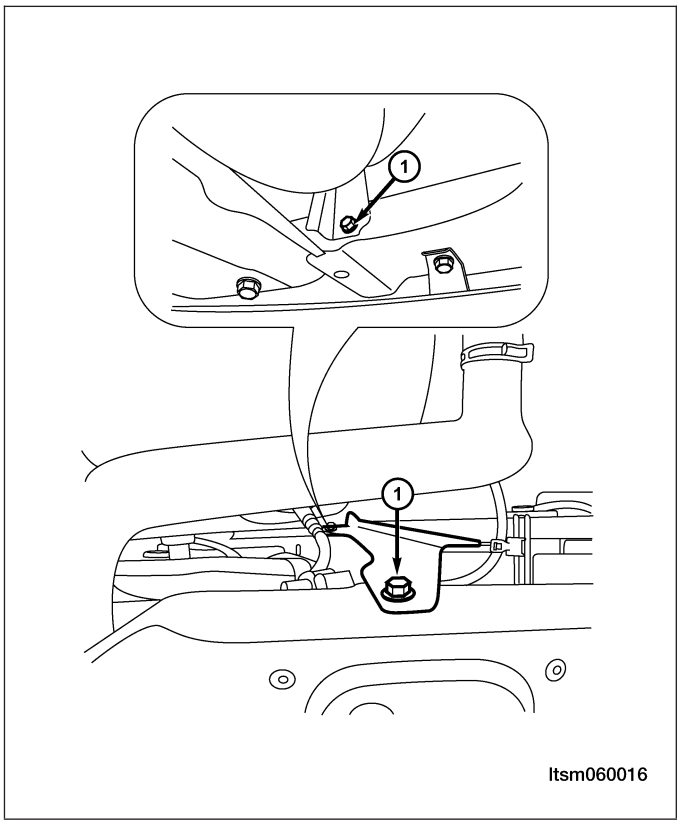

9. Remove the radiator support mounting bolts (1). (Tighten: Radiator support mounting bolts to 5 N·m)
10. Remove the radiator from the engine compartment.
11. Installation is in the reverse order of removal.

Installation Notes:

- Verify the cooling system is filled to proper specifications.

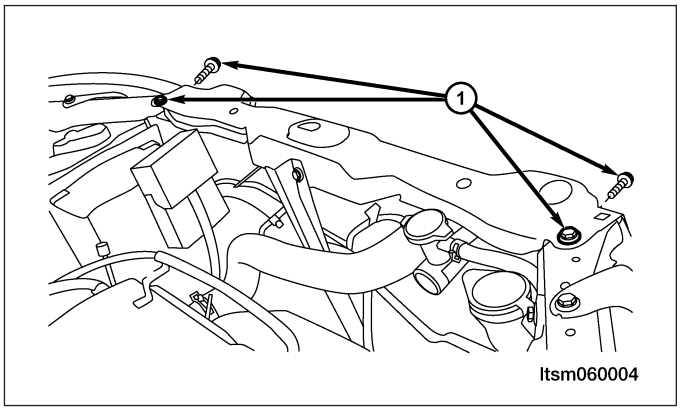

Cooling Fan

Description

The radiator cooling fans are dual-speed electric motor driven fans. The radiator fan assembly includes two electric motors, two five-blade fans, and a support shroud that is attached to the radiator. The radiator fans are serviced as an assembly.

Downloaded from www.Manualslib.com manuals search engine

Operation

The radiator cooling fan operation is controlled by the Engine Control Module (ECM) and the fan relays, with inputs from the following:

- Engine coolant temperature
- Automatic transaxle fluid temperature (with DP0 transaxle)
- A/C signal

Inspect the cooling fan for proper low speed and high speed operation:

- The low speed fan should be switched on at 98°C and switched off at 94°C.
- The high speed fan should be switched on at 105°C and switched off at 101°C.
- If the water temperature is greater than 101°C after the fan is switched off, the fan will continue to operate for 1 minute.
- If the water temperature is greater than 94°C after the fan is switched off, the fan will continue to operate for 0.5 minute.
- If the water temperature is less than 85°C after the fan is switched off, the fan will stop operating.

Removal & Installation

WARNING!

Always allow the engine to cool before opening the cooling system. Do not remove the coolant pressure relief cap when the engine is operating or the cooling system is hot. The cooling system is under pressure; steam and hot liquid can come out forcefully when the cap is loosened slightly. Failure to follow these instructions may result in serious personal injury.

1. Disconnect the negative battery cable.
2. Drain the cooling system (See Cooling System Draining Procedure in Section 06 Cooling System).
3. Disconnect the upper radiator hose from the radiator.
4. Disconnect the cooling fan electrical connector and the cooling fan ground cable connected to the body.
5. Remove the cooling fan mounting bolts (1) to the radiator.
   (Tighten: Cooling fan mounting bolts to 5 N·m)

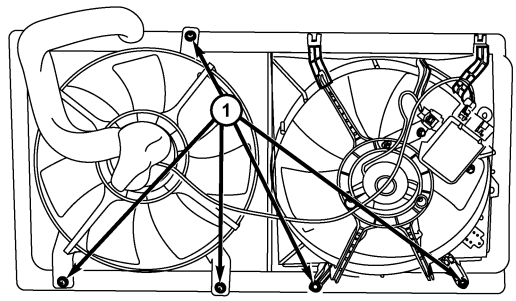

ltsm060008

6. Remove the radiator fan from the engine compartment.
7. Remove the cooling fan from its support, if necessary.
8. Installation is in the reverse order of removal.

Installation Notes:

- Verify the cooling system is filled to proper specifications.

Cooling Fan Inspection

1. Using the following table, apply battery voltage to the specified connector terminals.
2. Verify that the fan motor operates smoothly when voltage is applied.
3. If the test results are not as specified, replace the fan motor.

Downloaded from www.Manualslib.com manuals search engine

With 1.6L & 1.8L & 2.0L Engine

MEASURING CONDITION	OPERATION	INSPECTION DIAGRAM
Battery positive (+) to terminal – 1 Battery negative (-) to terminal – 2	Turns smoothly	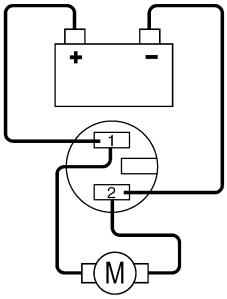 ltsm060012
Battery positive (+) to terminal – 1 Battery negative (-) to terminal – 2	Turns smoothly	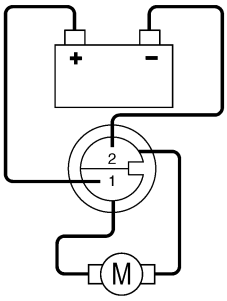 ltsm060013

Downloaded from www.Manualslib.com manuals search engine

With 2.4L Engine

MEASURING CONDITION	OPERATION	INSPECTION DIAGRAM
Battery positive (+) to terminal – 4 Battery negative (-) to terminal – 5	Turns smoothly	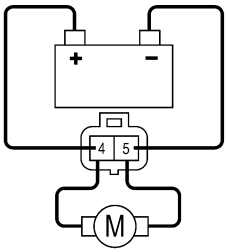 ltsm060010
Battery positive (+) to terminal – 6 Battery negative (-) to terminal – 7	Turns smoothly	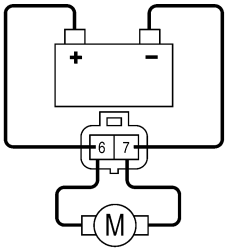 ltsm060011

Downloaded from www.Manualslib.com manuals search engine

EXHAUST
07

CONTENTS

page

Exhaust System 07-1

EXHAUST SYSTEM

GENERAL INFORMATION 07-2
Description 07-2
Operation 07-3
Specifications 07-3

DIAGNOSIS AND TESTING 07-4
Exhaust System Diagnostic Chart 07-4

ON-VEHICLE SERVICE 07-5

Exhaust Pipe Assembly 07-5
Removal & Installation - 1.6L & 1.8L & 2.0L 07-5
Removal & Installation - 2.4L 07-5

Muffler 07-6
Removal & Installation 07-6

Catalytic Converter 07-6
Description 07-6
Operation 07-6
Removal & Installation 07-7

Downloaded from www.Manualslib.com manuals search engine

GENERAL INFORMATION

Description

1.6L & 1.8L & 2.0L Exhaust System

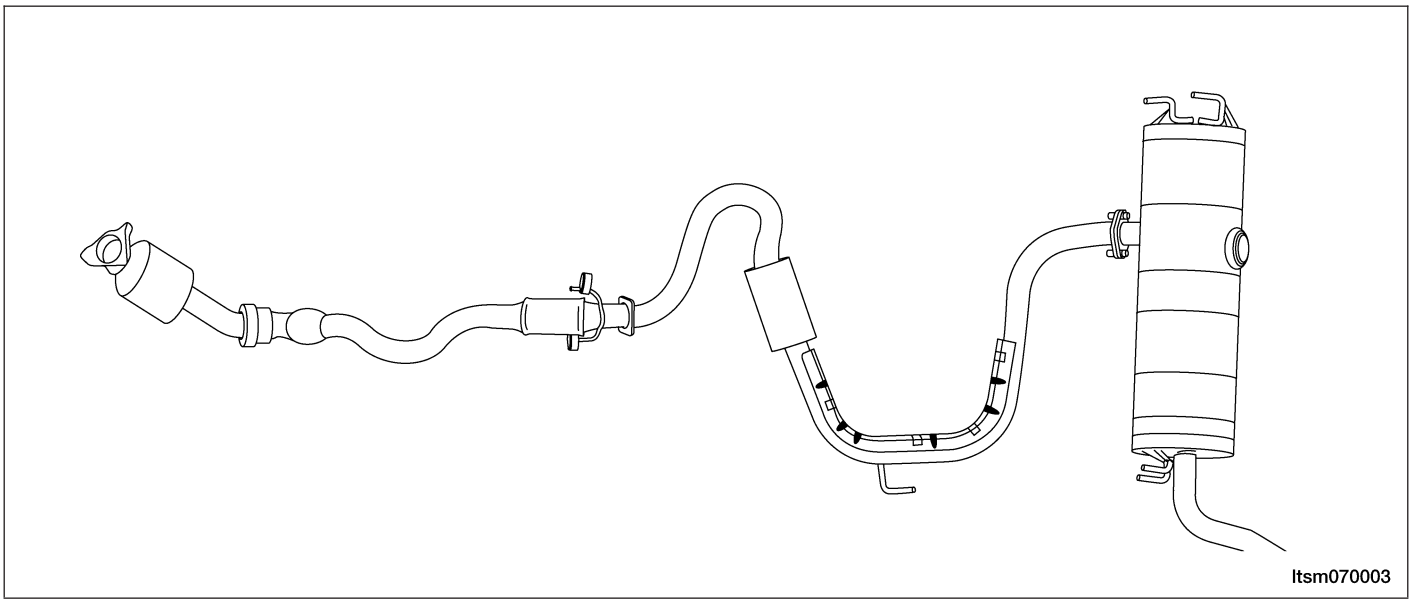

2.4L Exhaust System

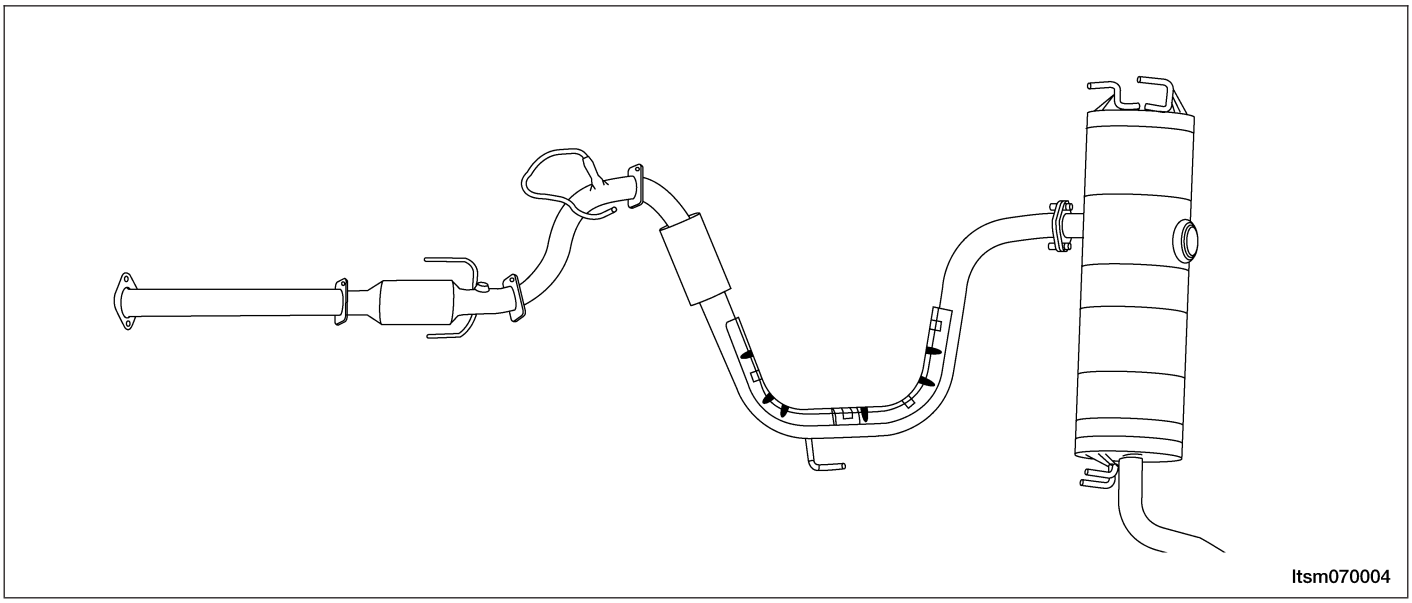

The exhaust system provides an exit for exhaust gases and reduces engine noise by moving exhaust gases through the three-way catalytic converter, a muffler inlet pipe and a muffler. Rubber exhaust hanger insulators attach the exhaust system to the mounting hooks.

The exhaust system contains the following components:

- Catalytic converter assembly
- Muffler assembly
- Exhaust brackets with isolators bolted to the body
- Heated oxygen sensors mounted to the exhaust pipes
- Tailpipe assembly

Downloaded from www.Manualslib.com manuals search engine

WARNING!

Exhaust gases contain carbon monoxide which can be harmful to your health and are potentially lethal. Exhaust system leaks should be repaired immediately. Never operate the engine in enclosed areas. Failure to follow these instructions may result in personal injury or death.

Operation

In order to reduce vehicle emissions released by the engine, the catalytic converter is required to perform in all operating conditions. This reduction is especially beneficial during the cold start and warm up phases of operation, which is when a majority of the tailpipe emissions occur on today's vehicles because the catalytic converter has not yet reached its operating temperature. The exhaust system channels exhaust gases from the engine and away from the vehicle.

Specifications

Torque Specifications

DESCRIPTION	TORQUE (N·m)
Catalytic Converter Mounting Nuts	50
Exhaust Manifold Flange Bolts	49 ± 5
Muffler Mounting Nuts	50

Downloaded from www.Manualslib.com manuals search engine

DIAGNOSIS AND TESTING

Exhaust System Diagnostic Chart

CONDITION	POSSIBLE CAUSES	CORRECTION
Excessive Exhaust Noise	· Leaks at pipe joints. · Burned or blown out muffler. · Burned or rusted-out exhaust pipe. · Exhaust pipe leaking at manifold flange. · Exhaust manifold cracked or broken. · Leak between exhaust manifold and cylinder head. · Restriction in muffler or tailpipe. · Exhaust system contacting body or chassis.	· Tighten clamps to specified torque at leaking joints. · Replace muffler assembly. · Replace exhaust pipe. · Tighten connection attaching nuts. · Replace exhaust manifold. · Tighten exhaust manifold to cylinder head stud nuts or bolts. · Remove restriction, if possible. Replace muffler or tailpipe, as necessary. · Re-align exhaust system to clear surrounding components.
Leaking Exhaust Gases	· Leaks at pipe joints.	· Tighten/replace clamps at leaking joints.
Excessive Exhaust Temperature	· Ignition timing incorrect. · Poor fuel quality. · Engine running rich.	· Adjust the timing. · Change and clean the fuel tank. · Repair as needed.

Downloaded from www.Manualslib.com manuals search engine

ON-VEHICLE SERVICE

Exhaust Pipe Assembly

Removal & Installation - 1.6L & 1.8L & 2.0L

WARNING!

The normal operating temperature of the exhaust system is very high. Therefore, never work around, or attempt to service any part of the exhaust system until it has cooled. Special care should be taken when working near the catalytic converter. The temperature of the converter rises to a high level after a short period of engine operating time.

1. Raise and support the vehicle.
2. Remove the catalytic converter to exhaust manifold bolts (1).
   (Tighten: Exhaust manifold flange bolts to 49 ± 5 N·m)

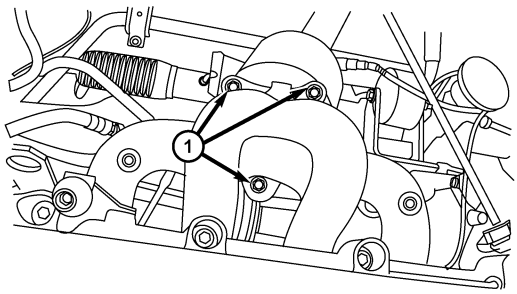

ltsm070005

3. Remove all the support isolators.
4. Remove the exhaust pipe assembly.

Removal & Installation - 2.4L

WARNING!

The normal operating temperature of the exhaust system is very high. Therefore, never work around, or attempt to service any part of the exhaust system until it has cooled. Special care should be taken when working near the catalytic converter. The temperature of the converter rises to a high level after a short period of engine operating time.

1. Raise and support the vehicle.
2. Remove the catalytic converter to exhaust manifold bolts (1).
   (Tighten: Exhaust manifold flange bolts to 49 ± 5 N·m)

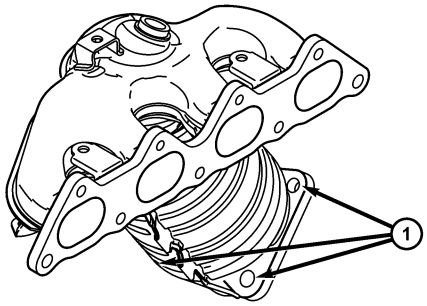

ltsm020189

3. Remove all the support isolators.
4. Remove the exhaust pipe assembly.

Downloaded from www.Manualslib.com manuals search engine

Muffler

Removal & Installation

WARNING!

The normal operating temperature of the exhaust system is very high. Therefore, never work around, or attempt to service any part of the exhaust system until it has cooled. Special care should be taken when working near the catalytic converter. The temperature of the converter rises to a high level after a short period of engine operating time.

1. Raise and support the vehicle.
2. Remove the muffler mounting nuts (1).
   (Tighten: Muffler mounting nuts to 50 N·m)
3. Remove the support isolators (2).

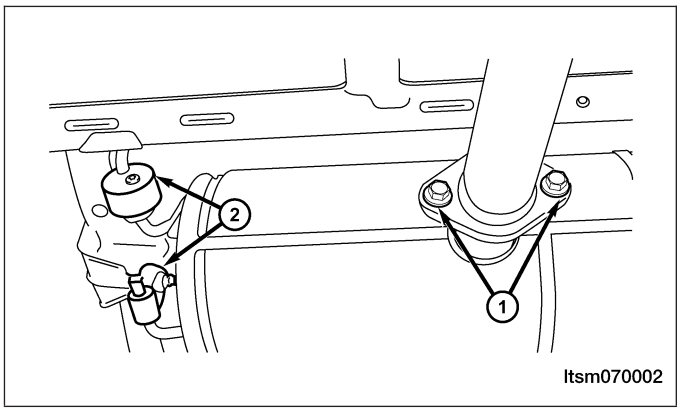

4. Remove the muffler.
5. Clean the ends of the pipes and the muffler to ensure proper mating of all parts. Discard broken or worn isolators, rusted or overused clamps, supports, and attaching parts.
6. Installation is in the reverse order of removal.

Catalytic Converter

Description

The catalytic converter is attached to the exhaust manifold using fasteners and a gasket for sealing.

The catalytic converter plays a major role in the emission control system. The catalytic converter operates as a gas reactor. Its catalytic function is to speed the heat-producing chemical reaction of components in the exhaust gases in order to reduce air pollutants.

Operation

Catalyst operation is dependent on its ability to store and release the oxygen needed to complete the emissions-reducing chemical reactions. As a catalyst deteriorates, its ability to store oxygen is reduced. Since the catalyst's ability to store oxygen is somewhat related to proper operation, oxygen storage can be used as an indicator of catalyst performance.

CAUTION:

Unleaded gasoline must be used in order to avoid damaging the catalyst core.

Downloaded from www.Manualslib.com manuals search engine

Removal & Installation

WARNING!

The normal operating temperature of the exhaust system is very high. Therefore, never work around or attempt to service any part of the exhaust system until it has cooled. Special care should be taken when working near the catalytic converter. The temperature of the converter rises to a high level after a short period of engine operating time.

1. Disconnect the negative battery cable.
2. Raise and support the vehicle.
3. Remove the catalytic converter mounting nuts (1) and gaskets.
   (Tighten: Catalytic converter mounting nuts to 50 N·m)
4. Remove the catalytic converter.
5. Clean the ends of the pipes to ensure proper mating of all parts. Discard broken or worn isolators, rusted or overused clamps, supports, and attaching parts.
6. Installation is in the reverse order of removal.

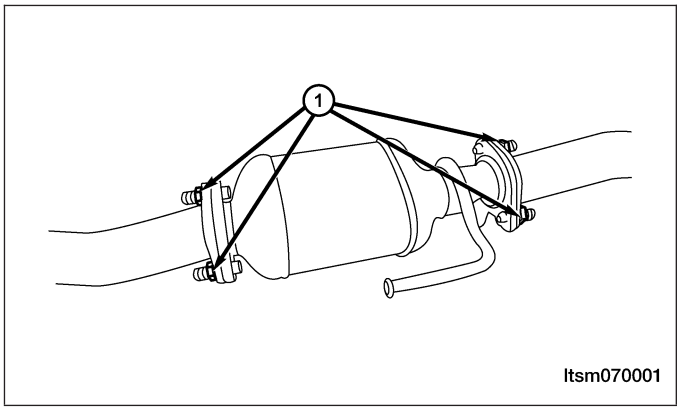

Downloaded from www.Manualslib.com manuals search engine

TRANSAXLE & TRANSFER CASE

08

CONTENTS

	page
DP0 Automatic Transaxle	**08-1**
F4A4 Automatic Transaxle	**08-143**
5-Speed Manual Transaxle	**08-246**
Front Differential	**08-307**
Clutch System	**08-316**
Transfer Case (4x4)	**08-326**

DP0 AUTOMATIC TRANSAXLE

GENERAL INFORMATION 08-3
- Description 08-3
- Operation 08-6
- Specifications 08-7
- Special Tools 08-8
- Electrical Schematics 08-10
- DP0 Transaxle Control Module (TCM) Connector Pin-Out Table 08-18

DIAGNOSIS & TESTING 08-19
- Diagnostic Help 08-19
- Intermittent DTC Troubleshooting 08-19
- Ground Inspection 08-19
- Diagnostic Tools 08-19
- **Diagnostic Trouble Code (DTC) List** 08-20
  - DP0 Automatic Transaxle DTC List 08-20
- **Diagnostic Trouble Code (DTC) Tests** 08-22
  - P0641 - Sensor Feed 08-22
  - P0657 - Solenoid Power Supply Circuit Shorted To Voltage 08-28
  - P0657 - Solenoid Power Supply Circuit Open 08-32
  - P0705 - Multi-Function Switch: Prohibited Position 08-37
  - P0710 - Fluid Temperature Sensor 08-42
  - P0715 - Turbine Speed Sensor Affected By Interference 08-46
  - P0730 - Ratio Of Transaxle Error 08-50
  - P0753 - Shift Solenoid Valve 1 (SSV1) Open Circuit Or Short To Power Supply Or Short To Ground 08-56
  - P0758 - Shift Solenoid Valve 2 (SSV2) Open Circuit Or Short To Power Supply Or Short To Ground 08-62
  - P0763 - Shift Solenoid Valve 3 (SSV3) Short To Power Supply, P0763 - Shift Solenoid Valve 3 (SSV3) Open Or Short To Ground Circuit 08-68
  - P0768 - Shift Solenoid Valve 4 (SSV4) Short To Power Supply, P0768 - Shift Solenoid Valve 4 (SSV4) Open Or Short To Ground Circuit 08-74
  - P0773 - Shift Solenoid Valve 5 (SSV5) Short To Power Supply, P0773 - Shift Solenoid Valve 5 (SSV5) Open Or Short To Ground Circuit 08-81
  - P0775 - EVM (Modulation Solenoid Valve) Open Circuit Or Short To Ground, P0775 - EVM (Modulation Solenoid Valve) Shorted To Voltage 08-87
  - P0795 - Torque Converter Lock Solenoid Valve (EVLU) Open Circuit Or Short To Ground, P0795 - Torque Converter Lock Solenoid Valve (EVLU) Short To Voltage 08-93
  - P0840 - Pressure Sensor 08-99
  - P1928 - Shift Lock Solenoid Valve Circuit Shorted To Voltage 08-104
  - P1928 - Shift Lock Solenoid Valve Open Circuit Or Short To Ground 08-109
  - P2709 - Shift Solenoid Valve 6 (SSV6) Short To Power Supply 08-114
  - P2709 - Shift Solenoid Valve 6 (SSV6) Open Circuit Or Short To Ground 08-119

Downloaded from www.Manualslib.com manuals search engine

P2753 - EPDE Circuit Or Short To Power Supply, P2753 - EPDE Open Circuit Or Short To Ground 08-125
U0001 - CAN Communication Error 08-130

ON-VEHICLE SERVICE 08-136

DPO Automatic Transaxle Assembly 08-136
Removal & Installation 08-136

Automatic Shifter Selector 08-140
Removal & Installation 08-140

Transaxle Control Module (TCM) 08-142
Removal & Installation 08-142

Downloaded from www.Manualslib.com manuals search engine

GENERAL INFORMATION

Description

The DP0 automatic transaxle is a four-speed transaxle that is a conventional hydraulic/mechanical transaxle assembly with an integral differential, and is controlled with adaptive electronic controls and monitors. The hydraulic system of the transaxle consists of the transaxle fluid, fluid passages, hydraulic valves, fluid pump, and various line pressure control components.

The Transaxle Control Module (TCM) is the heart of the electronic control system and relies on information from various direct and indirect inputs (sensors, switches, etc.) to determine driver demand and vehicle operating conditions. With this information, the ECM/TCM can calculate and perform timely and quality shifts through various output or control devices.

The TCM also performs certain self-diagnostic functions and provides comprehensive information (sensor data, DTCs, etc.) which is helpful in proper diagnosis and repair. This information can be viewed with the X-431 scan tool.

Downloaded from www.Manualslib.com manuals search engine

DP0 Transaxle External View

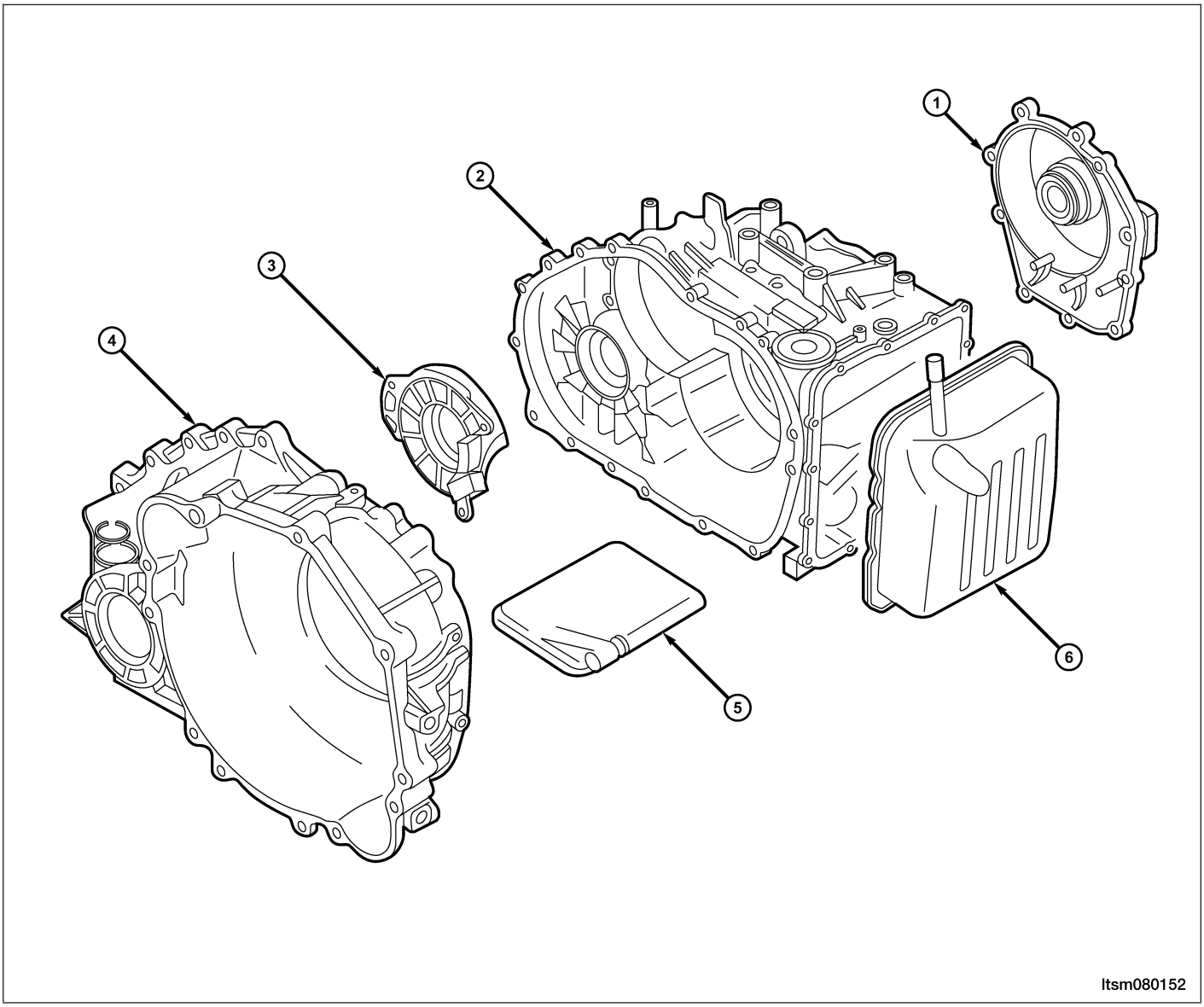

1 - Rear Cover	4 - Torque Converter Housing
2 - Transaxle Housing	5 - Fluid Filter
3 - Bearing Retainer	6 - Valve Body Cover

Downloaded from www.Manualslib.com manuals search engine

DP0 Transaxle Internal View

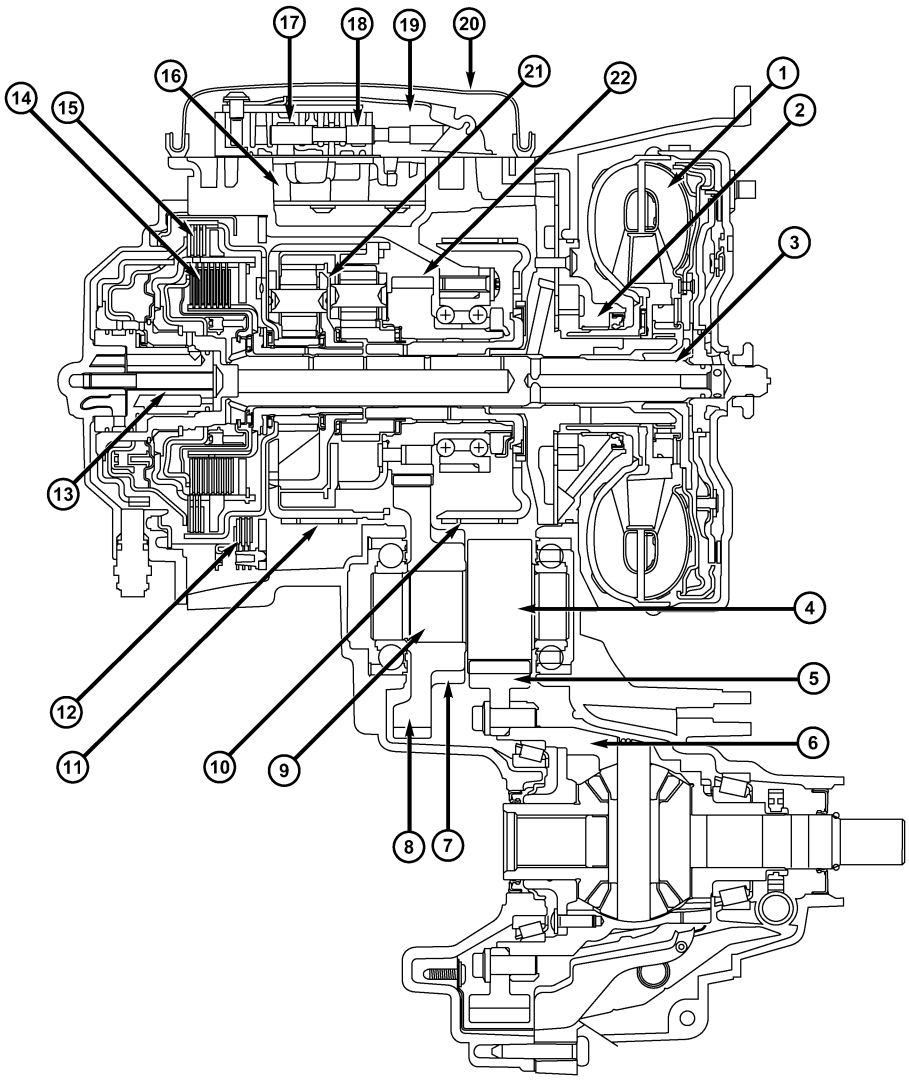

besm080056

1 - Torque Converter	12 - Brake F1 (4th Gear)
2 - Fluid Pump Assembly	13 - Fluid Line
3 - Input Shaft	14 - Clutch E2 (2nd, 3rd and 4th Gear)
4 - Secondary Differential Driven Gear	15 - Clutch E1 (Reverse and 1st Gear)
5 - Differential Ring Gear	16 - Accumulator
6 - Differential Case	17 - Manual Valve
7 - Parking Gear	18 - Accumulator
8 - Primary Differential Driven Gear	19 - Ratchet Gear Plate
9 - Transfer Shaft	20 - Accumulator Cover
10 - Brake F3 (1st and 2nd Gear)	21 - Planet Gear
11 - Brake F2 (Reverse Gear)	22 - Primary Differential Drive Gear

Downloaded from www.Manualslib.com manuals search engine

Operation

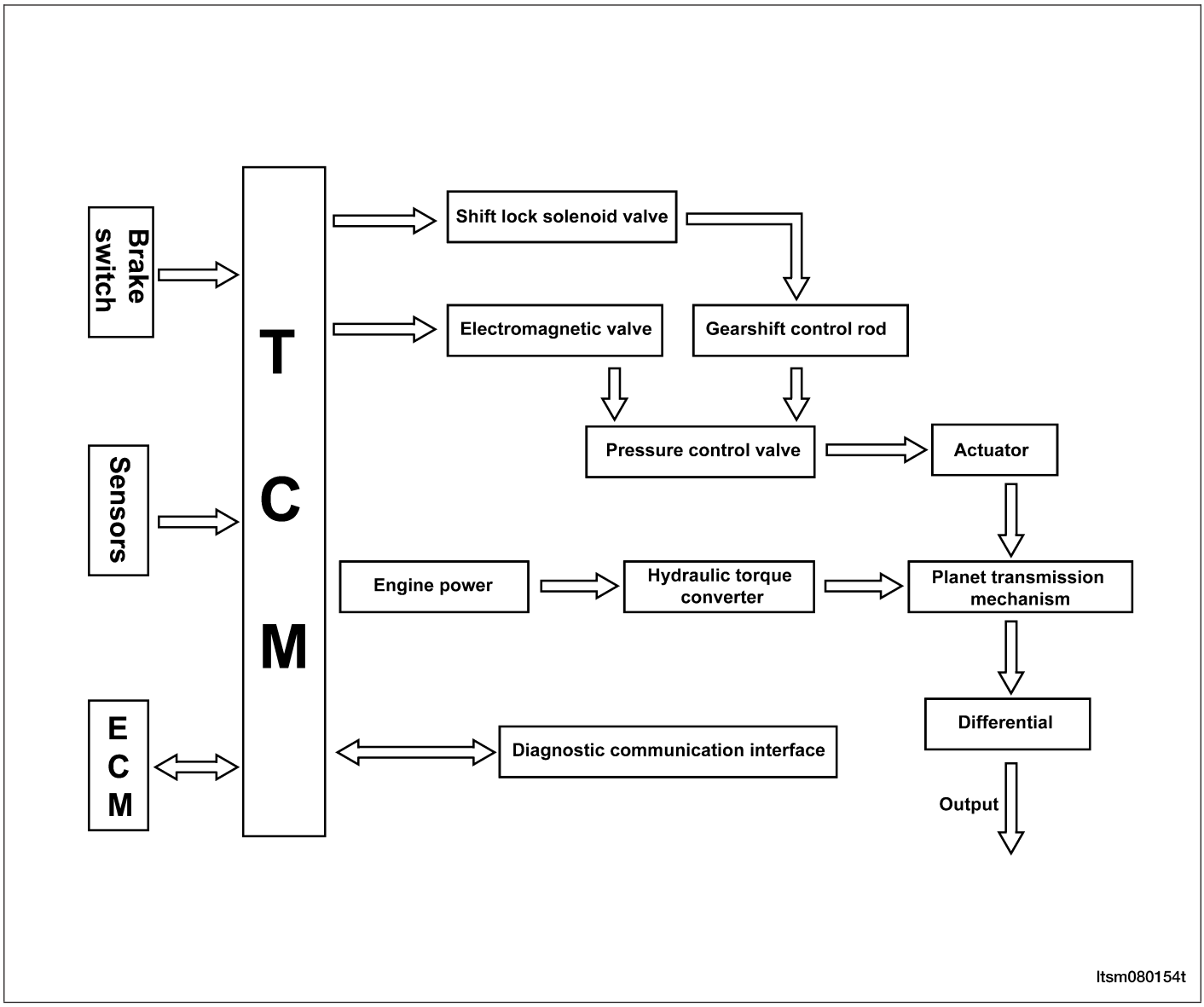

Automatic transaxle control is divided into the electronic and hydraulic transaxle control functions. While the electronic transaxle control is responsible for gear selection and for matching the pressures to the torque to be transmitted, the transaxle's power supply control occurs via hydraulic elements in the electro-hydraulic control module. The fluid supply to the hydraulic elements, such as the torque converter, the shift elements and the hydraulic transaxle control, is provided by way of a fluid pump connected to the torque converter.

The Transaxle Control Module (TCM) allows for the precise adaptation of pressures to the corresponding operating conditions and to the engine output during the gearshift phase, resulting in a noticeable improvement in shift quality. The engine speed limit can be reached in the individual gears at full throttle and kickdown. The shift range can be changed in the forward gears while driving, but the TCM employs a downshift safeguard to prevent engine over speed. The system offers the additional advantage of flexible adaptation to different vehicle and engine variants.

Downloaded from www.Manualslib.com manuals search engine

Specifications

Torque Specifications

DESCRIPTION	TORQUE (N·m)
Drain Plug	33
Engine To Transaxle Bolts	80
Side Sill To Vehicle Body Bolts	120
Front Mount Bolts	60
Rear Mount Bolts	40
Fluid Pan Bolts	50
Transaxle Mount Nuts	120
Transaxle Mount Bolts	40
Drive Plate Bolts (automatic transaxle)	75

Gear Ratio Specifications

GEAR SELECTOR POSITION	RATIO
First	2.75
Second	1.5
Third	1
Overdrive	0.71
Reverse	2.45

Lubrication Specifications

DESCRIPTION	ITEM
Transaxle Fluid Quantity	6.0L
Transaxle Fluid Change Quantity	3.0L
Fluid Type	DEXTRON III
Fluid Change Cycle	40000 Km

Downloaded from www.Manualslib.com manuals search engine

Special Tools

Spline Spanner CH-30001	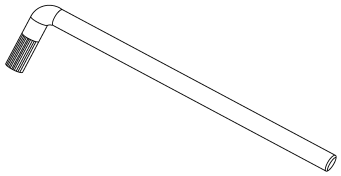 besm080042
Differential Seal Installer CH-30002	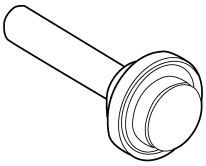 besm080043
Diagnostic Scan Tool X-431	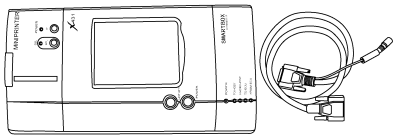 besm030001

Downloaded from www.Manualslib.com manuals search engine

Automatic Transaxle Fluid Pressure Gauge	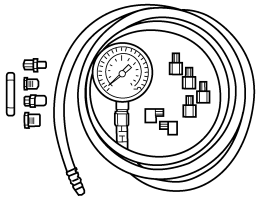 besm080059
Digital Multimeter Fluke 15B & 17B	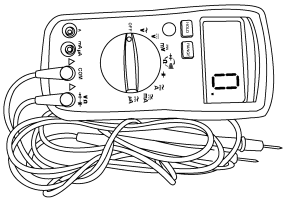 besm030002

Downloaded from www.Manualslib.com manuals search engine

Electrical Schematics

Automatic Transaxle (Page 1 of 8)

A/T CONTROL SYSTEM - WITH DP0 SYSTEM

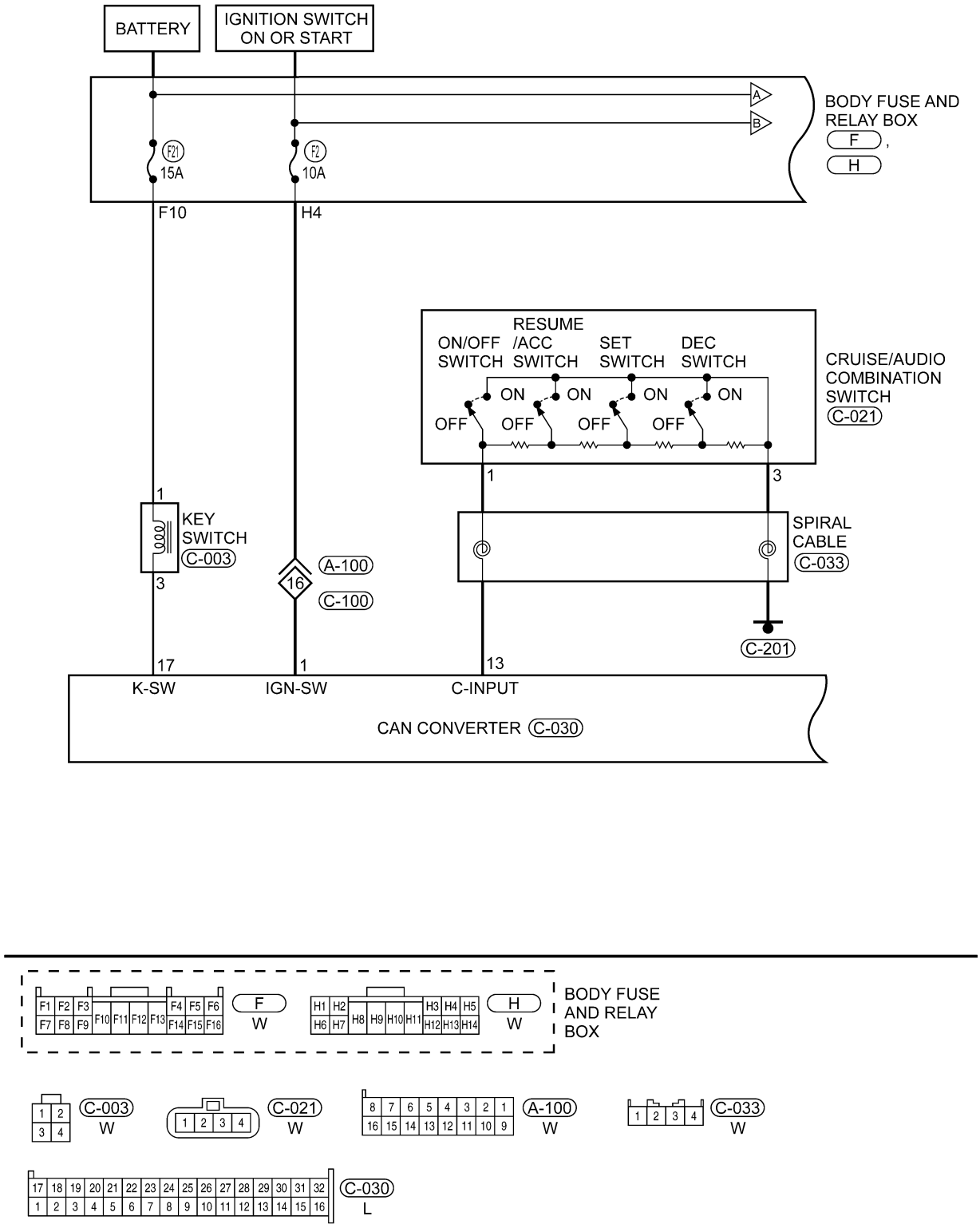

Itsmw080033t

Downloaded from www.Manualslib.com manuals search engine

Automatic Transaxle (Page 2 of 8)

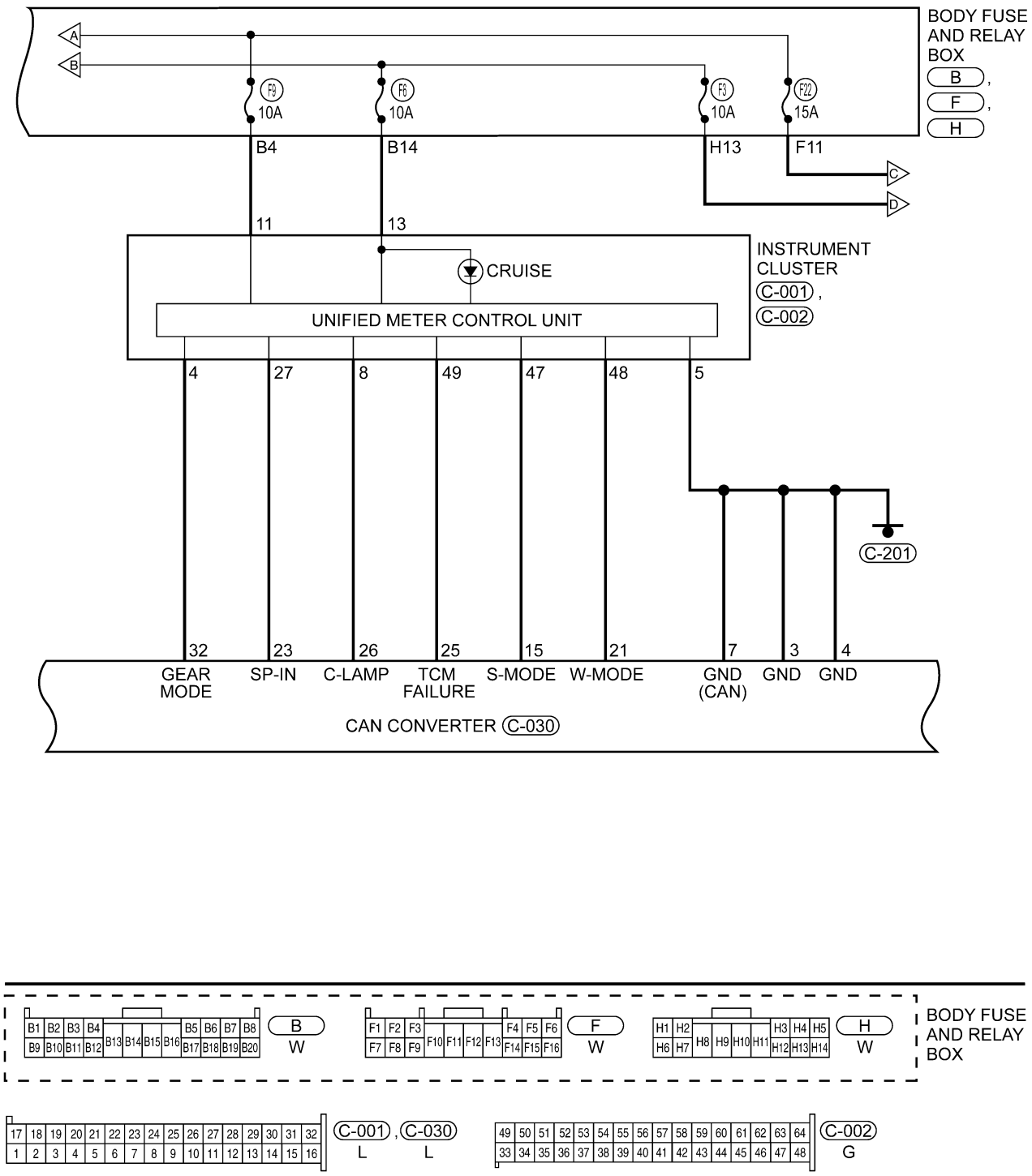

ltsmw080034t

Downloaded from www.Manualslib.com manuals search engine

Automatic Transaxle (Page 3 of 8)

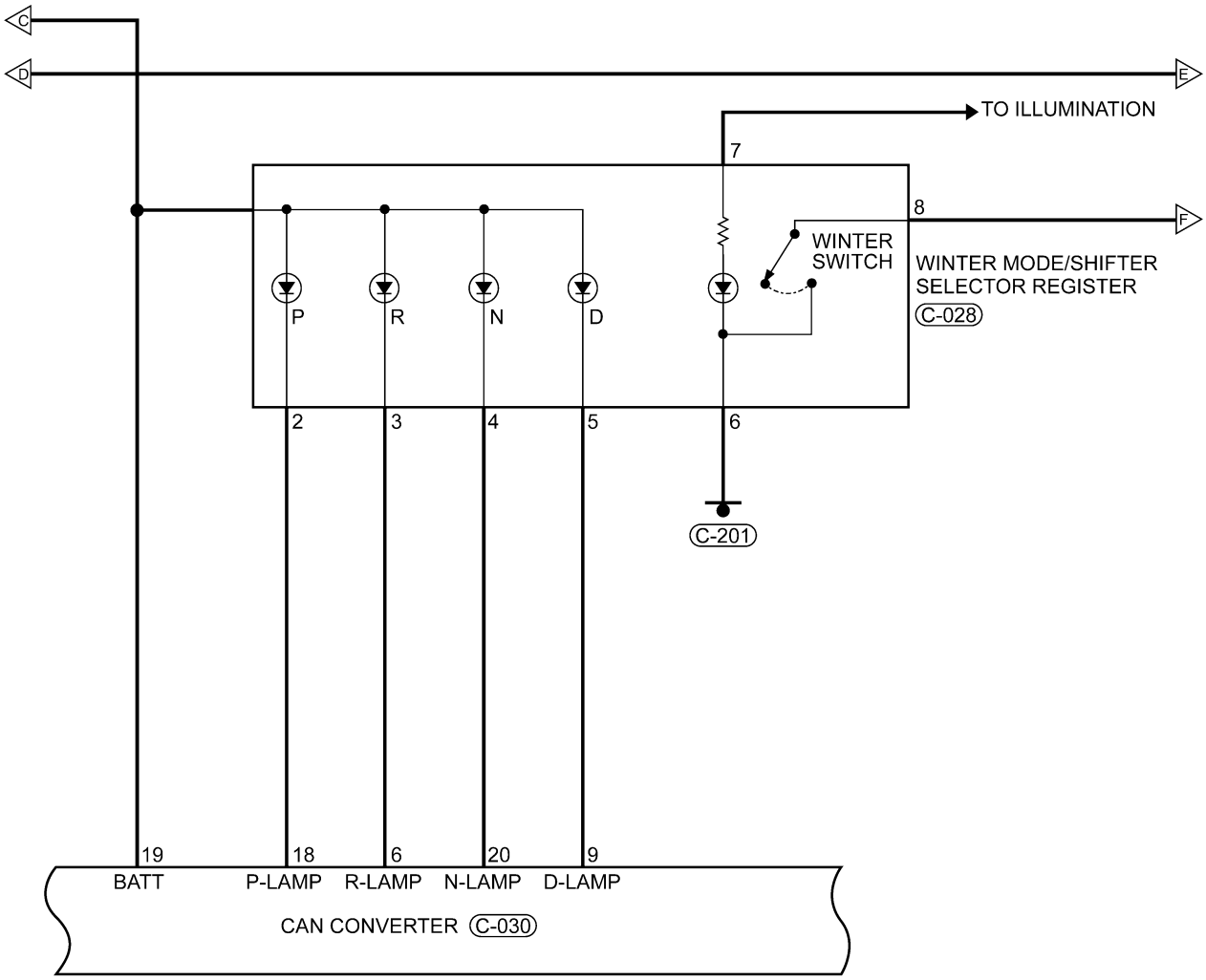

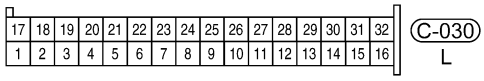

C-030
L

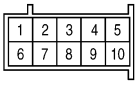

C-028
BR

ltsmw080035t

Downloaded from www.Manualslib.com manuals search engine

Automatic Transaxle (Page 4 of 8)

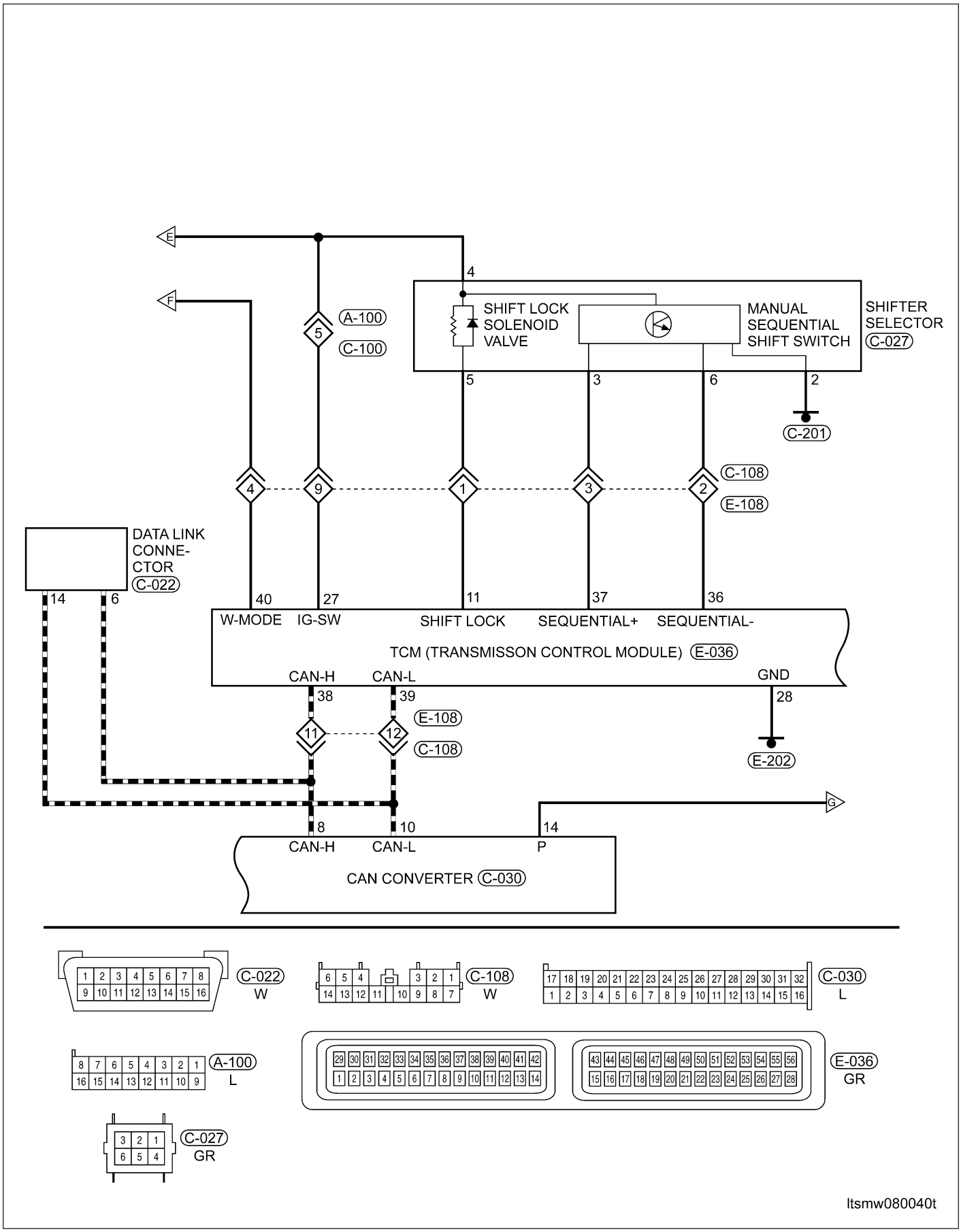

Downloaded from www.Manualslib.com manuals search engine

Automatic Transaxle (Page 5 of 8)

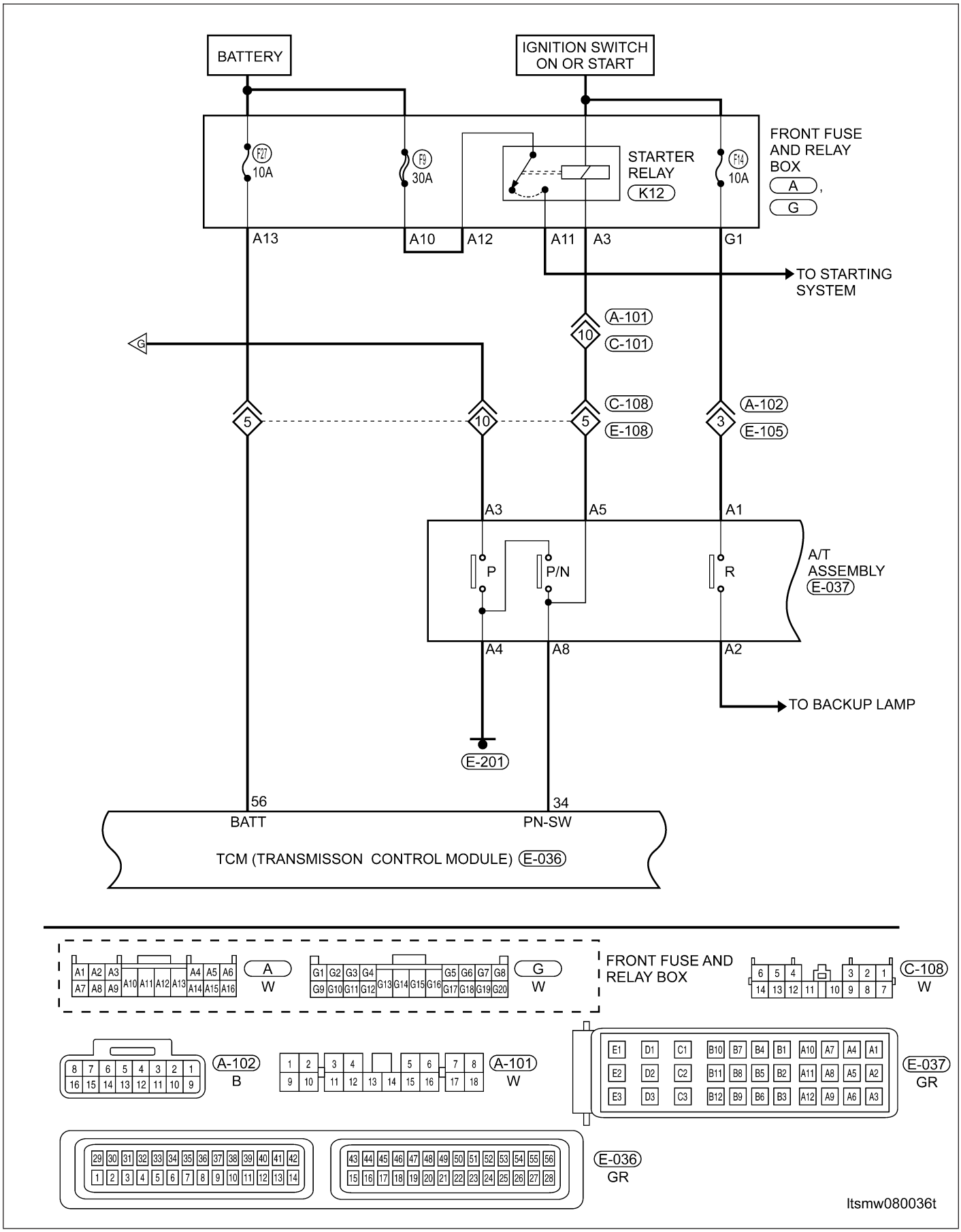

Downloaded from www.Manualslib.com manuals search engine

Automatic Transaxle (Page 6 of 8)

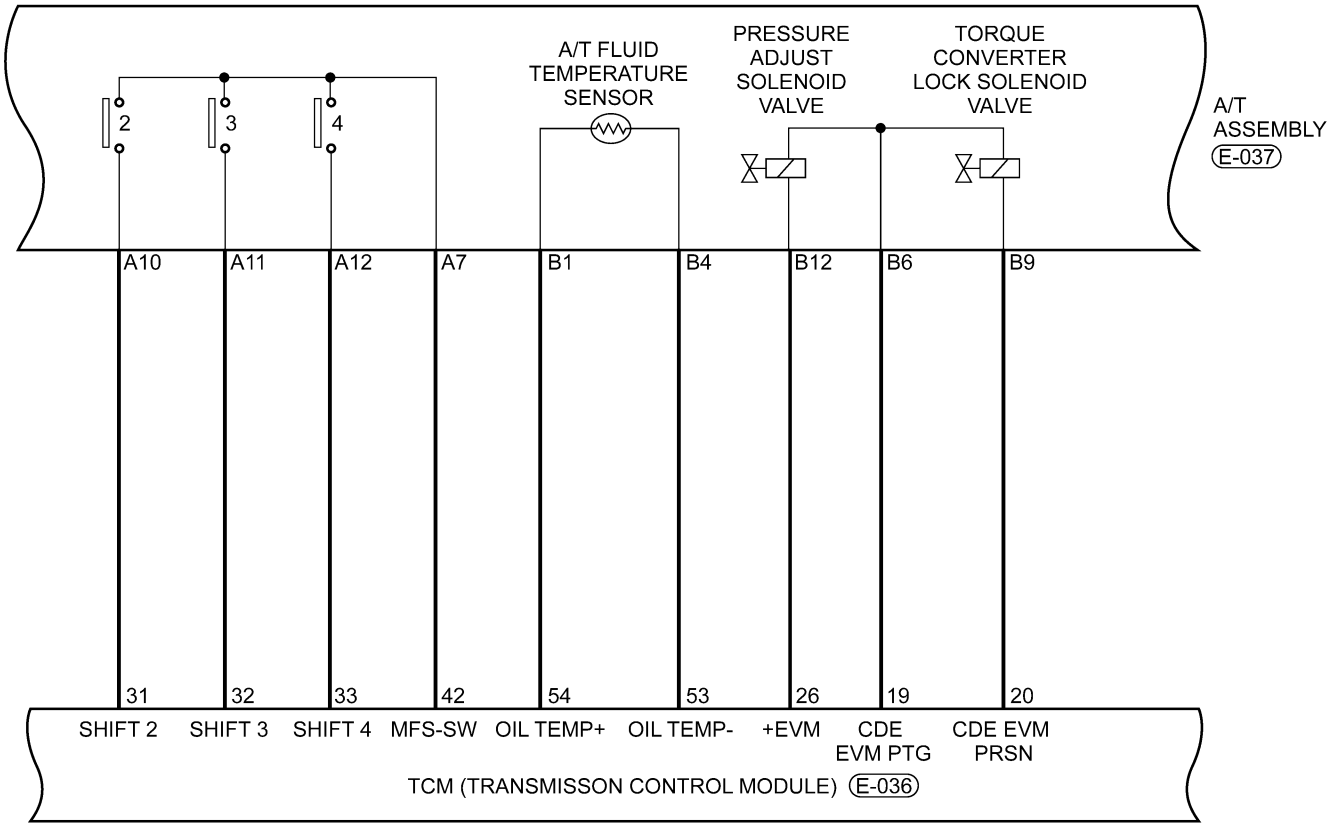

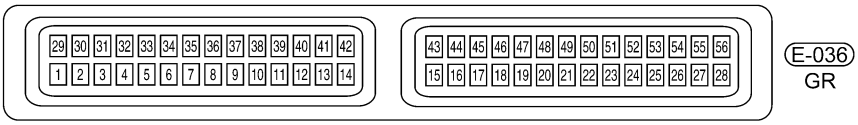

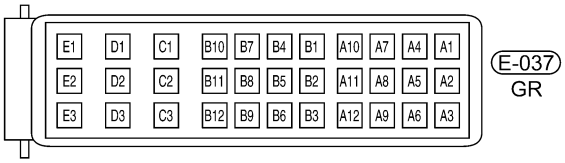

ltsmw080037t

Downloaded from www.Manualslib.com manuals search engine

Automatic Transaxle (Page 7 of 8

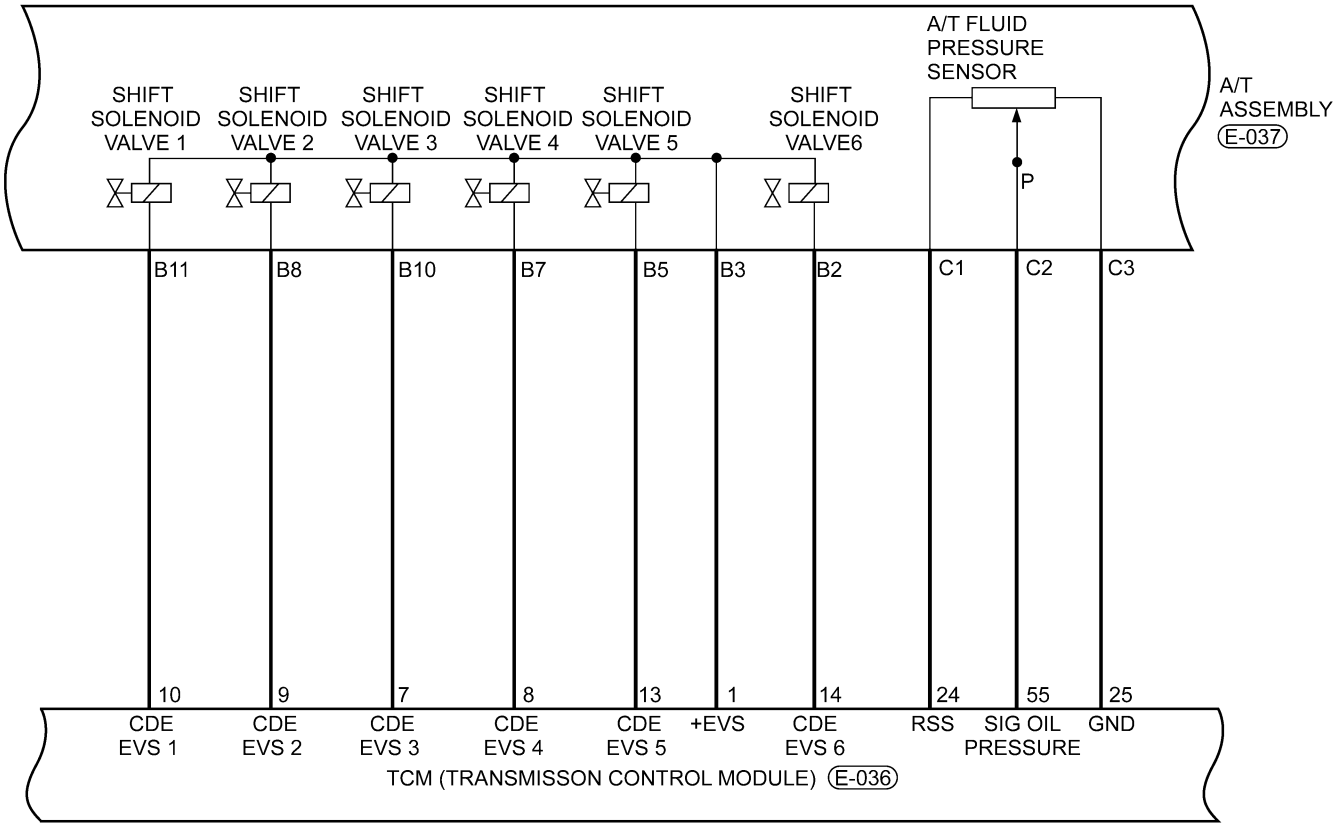

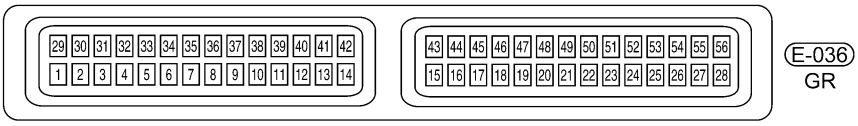

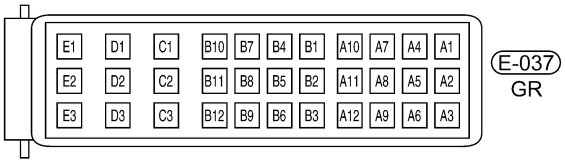

ltsmw080038t

Downloaded from www.Manualslib.com manuals search engine

Automatic Transaxle (Page 8 of 8

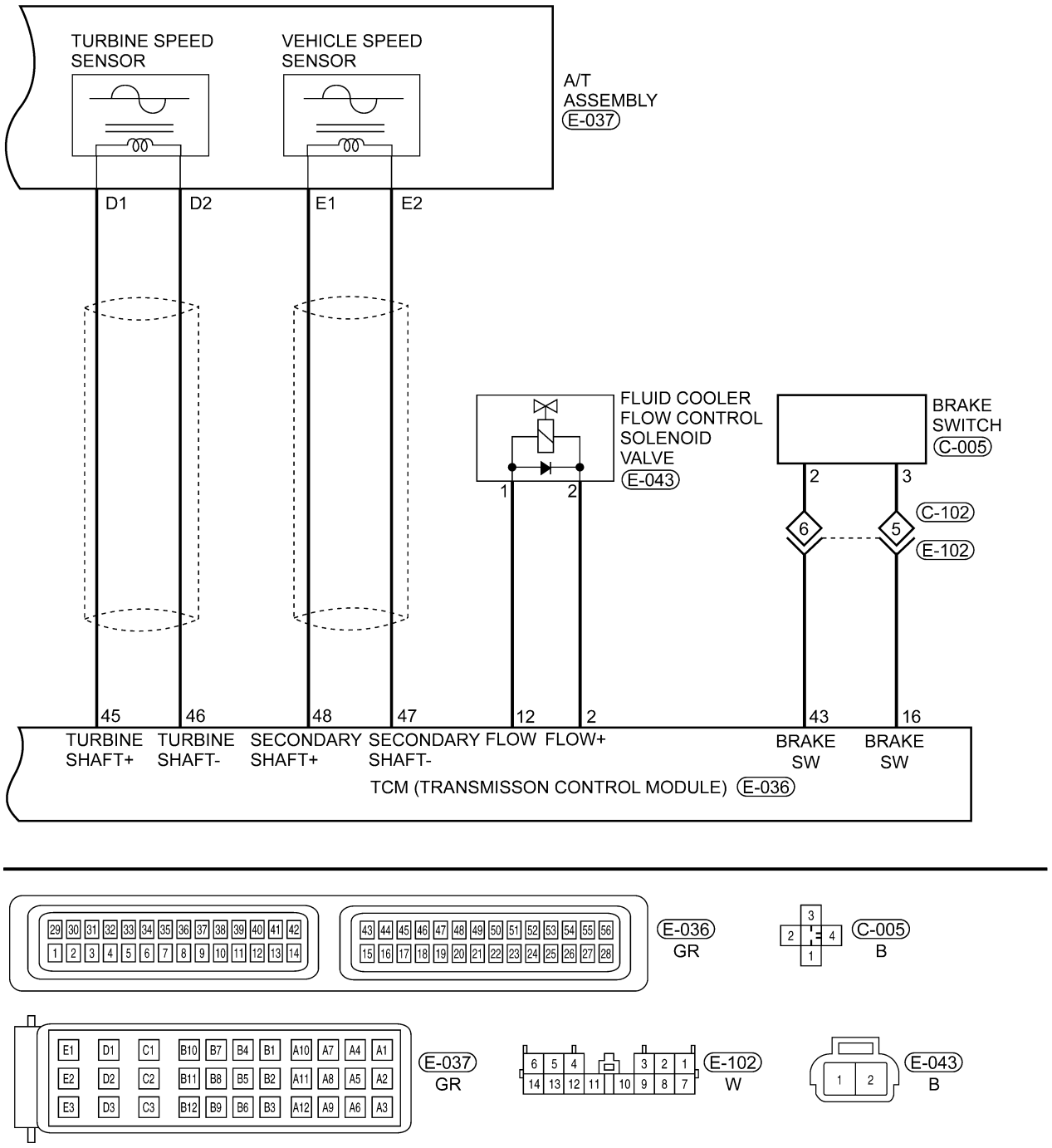

ltsmw080039t

Downloaded from www.Manualslib.com manuals search engine

DP0 Transaxle Control Module (TCM) Connector Pin-Out Table

TCM Pin-Out Table

PIN	CIRCUIT IDENTIFICATION	PIN	CIRCUIT IDENTIFICATION
1	+ EVS	29	-
2	Flow Control Solenoid Valve (+)	30	-
3	-	31	Shift 2
4	-	32	Shift 3
5	-	33	Shift 4
6	-	34	P/N Switch
7	Shift Solenoid Valve 3	35	-
8	Shift Solenoid Valve 4	36	Sequential (-)
9	Shift Solenoid Valve 2	37	Sequential (+)
10	Shift Solenoid Valve 1	38	CAN-H
11	Shift Lock	39	CAN-L
12	Fluid Cooler Flow Control	40	Winter Mode
13	Shift Solenoid Valve 5	41	-
14	Shift Solenoid Valve 6	42	MFS Switch
15	-	43	Brake Switch
16	Brake Switch	44	-
17	-	45	Turbine Shaft (+)
18	-	46	Turbine Shaft (-)
19	CDE EVM PTG	47	Secondary Shaft (-)
20	Torque Converter Lock Solenoid Valve (CDE EVM PRSN)	48	Secondary Shaft (+)
21	-	49	-
22	-	50	-
23	-	51	-
24	Regulated Sensor Supply	52	-
25	Sensor (GND)	53	Fluid Temperature Sensor (-)
26	Pressure Adjust Solenoid Valve (+EVM)	54	Fluid Temperature Sensor (+)
27	Ignition Switch	55	Fluid Pressure Sensor
28	GND	56	BATT

Downloaded from www.Manualslib.com manuals search engine

DIAGNOSIS & TESTING

Diagnostic Help

1. The X-431 scan tool connects to the Data Link Connector (DLC) and communicates with the vehicle electronic modules through the data network.
2. Confirm that the malfunction is current and carry-out the diagnostic tests and repair procedures.
3. If the Diagnostic Trouble Code (DTC) cannot be deleted, it is a current fault.
4. Use only a digital multimeter to perform voltage readings on electronic systems.
5. Refer to any Technical Bulletins that may apply to the failure.
6. Visually inspect the related wiring harness.
7. Inspect and clean all Engine Control Module (ECM) grounds that are related to the most current DTC.
8. If numerous trouble codes were set, use a wiring schematic and look for any common ground circuits or voltage supply circuits that may apply to the DTC.

Intermittent DTC Troubleshooting

If the failure is intermittent perform the following:

- Check for loose connectors.
- Look for any chafed, pierced, pinched, or partially broken wires.
- Monitor the scan tool data relative to this circuit.
- Wiggle the related wiring harness and connectors while looking for an interrupted signal on the affected circuit.
- If possible, try to duplicate the conditions under which the DTC set.
- Look for the data to change or for the DTC to reset during the wiggle test.
- Look for broken, bent, pushed out or corroded terminals.
- Inspect the sensor and mounting area for any condition that would result in an incorrect signal, such as damage, or foreign material.
- A data recorder, and/or oscilloscope should be used to help diagnose intermittent conditions.
- Remove the Engine Control Module (ECM) from the troubled vehicle and install in a new vehicle and test. If the DTC cannot be deleted, the ECM is malfunctioning. If the DTC can be deleted, return the ECM to the original vehicle.

Ground Inspection

Ground connections are very important to the proper operation of electrical and electronic circuits. Ground connections are often exposed to moisture, dirt and other corrosive elements. The corrosion (rust) can become an unwanted resistance. This added resistance can alter the way a circuit works.

Electronically controlled circuits are very sensitive to proper grounding. A loose or corroded ground can drastically affect an electronically controlled circuit. A poor or corroded ground can effect the circuit. Perform the following when inspecting a ground connection:

1. Remove the ground bolt or screw.
2. Inspect all mating surface for tarnish, dirt, rust, etc.
3. Clean as required to assure good contact.
4. Reinstall bolt or screw securely.
5. Inspect for ″add-on″ accessories which may be interfering with the ground circuit.
6. If several wires are crimped into one ground eyelet terminal, check for proper crimps. Make sure all of the wires are clean, securely fastened and providing a good ground path. If multiple wires are crimped to one eyelet, make sure no excess wire insulation has been crimped creating a bad ground.

Diagnostic Tools

1. Diagnostic Scan Tool X-431
2. Digital Multimeter
3. Jumper Wire

Transaxle Control Module (TCM) Electrical Harness Test Tool

If using a TCM electrical harness test tool, you can diagnose the TCM harness while the TCM is still connected.

- Measure sensor and solenoid resistance (always measure resistance with the power off).
- Measure the signal voltage of the TCM (always measure voltage with the power on).

Downloaded from www.Manualslib.com manuals search engine

NOTE :
Using the TCM electrical harness test tool will help prevent electrical connector terminal damage.

Diagnostic Trouble Code (DTC) List

DP0 Automatic Transaxle DTC List

DTC	DTC DEFINITION
P0218	Automatic Transaxle Overheating
P0603	Internal Control Module Memory
P0604	RAM
P0605	Checksum Error
P0641	Sensor Feed
P0657	Solenoid Power Supply Circuit Shorted To Voltage
P0657	SSV Feed Circuit Open
P0705	Multi-function Switch: Prohibited Position
P0706	Multi-function Switch: Intermediate Position
P0709	Multi-function Switch: Affected by Interference
P0710	Fluid Temperature Sensor
P0715	No Turbine Speed Sensor Signal
P0715	Turbine Speed Sensor Affected by Interference
P0720	No Vehicle Speed Sensor Signal
P0720	Vehicle Speed Sensor Affected by Interference
P0720	Vehicle Speed Sensor Signal Consistency
P0730	Cylinder Slip
P0740	Lock-up
P0753	EVS1 Circuit Open
P0753	EVS1 Circuit Shorted To Ground
P0753	EVS1 Circuit Shorted To Voltage
P0758	EVS2 Circuit Open
P0758	EVS2 Circuit Shorted To Voltage
P0763	EVS3 Circuit Open
P0763	EVS3 Circuit Shorted To Voltage
P0768	EVS4 Circuit Open
P0768	EVS4 Circuit Shorted To Ground
P0768	EVS4 Circuit Shorted To Voltage
P0773	EVS5 Circuit Open
P0773	EVS5 Circuit Shorted To Voltage
P0775	EVM (Electronic Valve Modulation) Circuit Open
P0775	EVM (Electronic Valve Modulation) Circuit Shorted To Voltage
P0795	EVLU Circuit Open
P0795	EVLU Shorted To Voltage
P0819	Flick Shift Contact Duration
P0819	Flick Shift Contacts
P0840	Pressure Sensor
P0850	P/N Contact

Downloaded from www.Manualslib.com manuals search engine

DTC	DTC DEFINITION
P1928	Shift Lock Solenoid Valve Circuit Open
P1928	Shift Lock Solenoid Valve Shorted To Voltage
P2709	EVS6 Circuit Open
P2709	EVS6 Circuit Shorted To Voltage
P2753	EPDE Circuit Open
P2753	EPDE Circuit Shorted To Ground
U0001	CAN Communication Error
U0100	Link to EMS
U1100	Coolant Temperature Not Sent By EMS
U111F	Engine Speed Not Sent By EMS
U1120	Actual Torque Not Sent By EMS
U1121	Pedal Position Not Sent By EMS
U1122	Expected Torque Not Sent By EMS
U112B	Torque Without Reduction Consistency
U112B	Torque Without Reduction Not Sent By EMS

Downloaded from www.Manualslib.com manuals search engine

Diagnostic Trouble Code (DTC) Tests

P0641 - Sensor Feed

TM - DP0 - OPS - 01

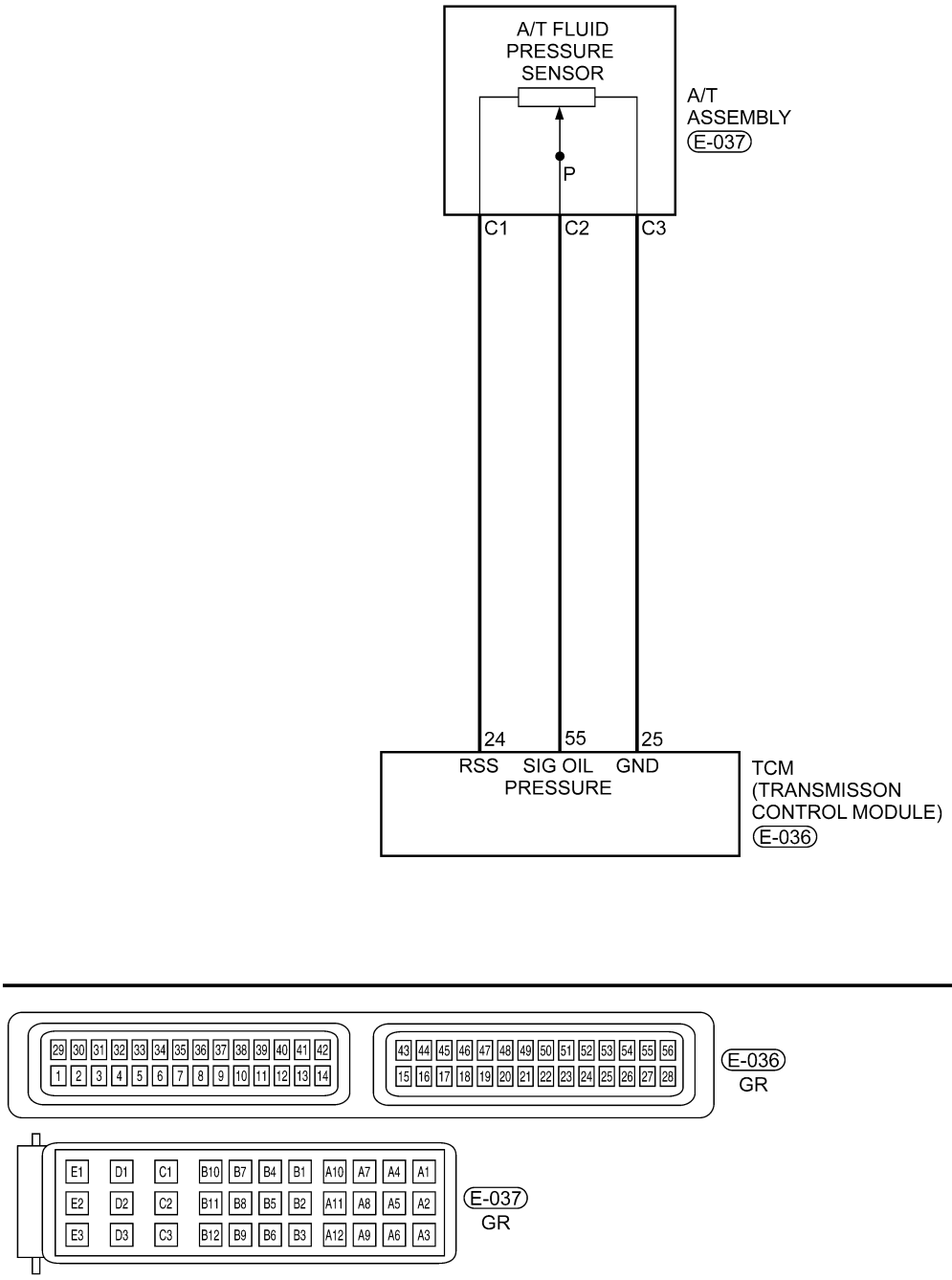

ltsmw080015t

Downloaded from www.Manualslib.com manuals search engine

A/T Fluid Temperature Sensor

TM - DP0 - FTS - 01

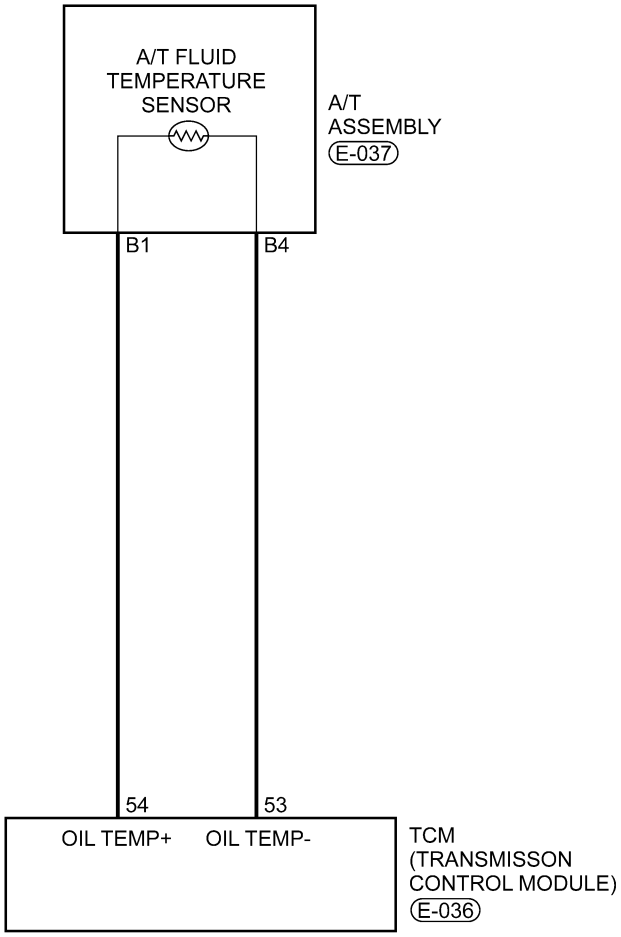

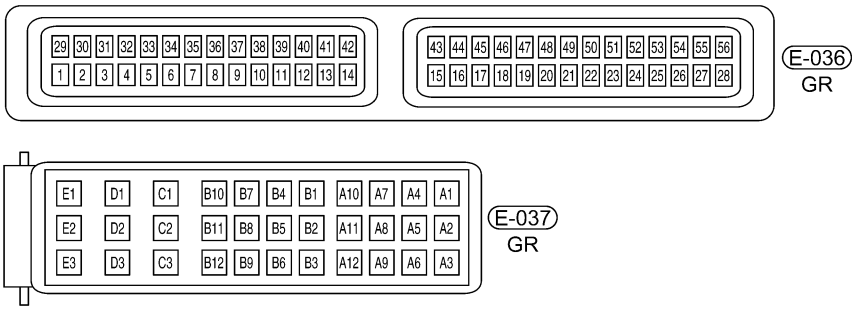

ltsmw080018t

Downloaded from www.Manualslib.com manuals search engine

On Board Diagnostic Logic

- Self-diagnosis detection logic.

DTC NO.	DTC DEFINITION	DTC DETECTION CONDITION	DTC SET CONDITION	POSSIBLE CAUSES
P0641	Sensor feed	Engine is running	The Transaxle Control Module (TCM) detects that the voltage is out of the acceptable range.	• TFT sensor • A/T fluid pressure sensor • Harness or connectors (The sensor circuit is open or shorted) • Transaxle Control Module (TCM)

DTC Confirmation Procedure:

Before performing the following procedure, confirm that battery voltage is more than 12 V.

- Turn ignition switch off.
- Connect the X-431 scan tool to the Data Link Connector (DLC) - use the most current software available.
- Turn ignition switch on, with the scan tool, view and erase stored DTCs in the TCM.
- Start the engine and warm it to normal operating temperature.
- With the scan tool, select view DTC and data stream.
- If the DTC is detected, the DTC condition is current. Go to Diagnostic Procedure - Step 1.
- If the DTC is not detected, the DTC condition is intermittent (See Diagnostic Help and Intermittent DTC Troubleshooting in Section 08 Transaxle & Transfer Case for more information).

NOTE :

- If DTCs P0840 and P0710 are present, diagnose and repair them before continuing with this test.
- Using the appropriate diagnostic test tool, you can diagnose the TCM harness while the TCM is still connected. This will help prevent electrical connector terminal damage.

NOTE :

While performing electrical diagnosis & testing, always refer to the electrical schematics for specific circuit and component information.

Diagnostic Procedure

1. CHECK TRANSAXLE FLUID PRESSURE AND TEMPERATURE SENSOR ELECTRICAL CONNECTOR

- Turn the ignition switch off.
- Disconnect the A/T assembly electrical connector E-037 (1).
- Inspect the electrical connector for damage.

Is the electrical connector OK?

Yes >> Go to the next step.

No >> Repair or replace the electrical connector as necessary.

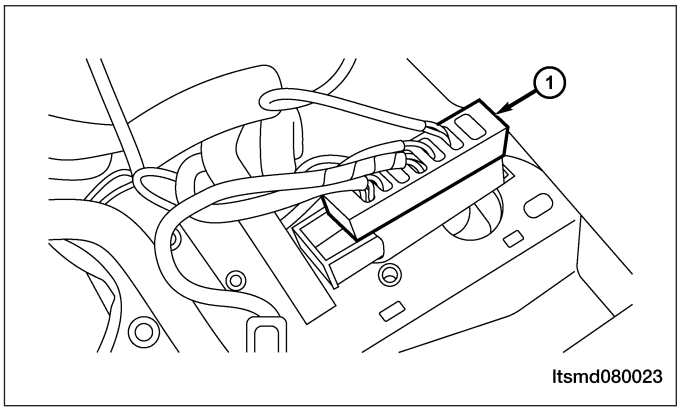

Downloaded from www.Manualslib.com manuals search engine

2. CHECK TRANSAXLE FLUID PRESSURE AND TEMPERATURE (TFT) SENSOR POWER SUPPLY

- Turn the ignition switch on.
- Check the A/T fluid pressure sensor voltage supply circuit for 5 V between connector E-037, terminal C1 and ground.
- Check the Transaxle Fluid Temperature (TFT) sensor voltage supply circuit for 5 V between connector E-037, terminal B1 and ground.

Is 5 V present at each terminal?

Yes >> • Go to the next step.

No >> • Repair or replace open circuit or short to ground or short to power in harness or connectors.

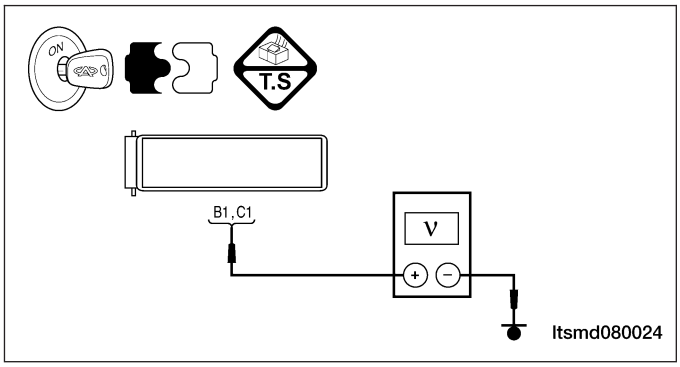

3. CHECK A/T FLUID PRESSURE SENSOR AND TFT SENSOR GROUND CIRCUIT

- Disconnect the Transaxle Control Module (TCM) electrical connector E-036 (1).
- Check the A/T fluid pressure sensor ground circuit between the A/T connector E-037, terminal C3 and TCM connector E-036 terminal 25 for an open, short to ground or short to voltage.
- Check the A/T TFT sensor ground circuit between the A/T connector E-037, terminal B4 and TCM connector E-036 terminal 53 for an open, short to ground or short to voltage.

Is the check result normal?

Yes >> Go to the next step.

No >> Repair the circuit for an open or short to ground or short to voltage in the harness or connectors.

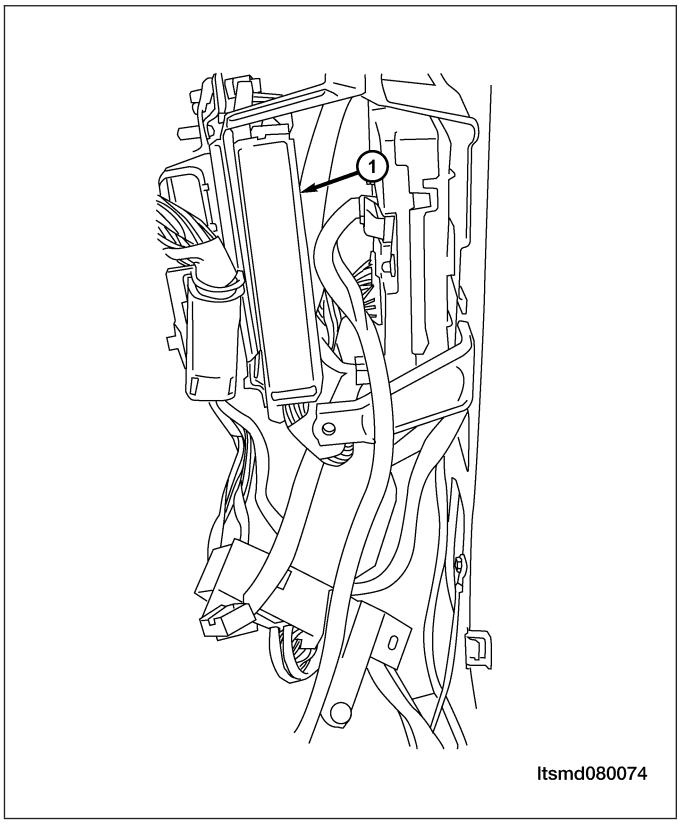

Downloaded from www.Manualslib.com manuals search engine

4. CHECK TFT SENSOR

- Check TFT sensor as follows:

TFT SENSOR RESISTANCE	
TEMPERATURE °C	RESISTANCE Ω
-50	93917
-30	28237.4
-10	9826
0	6079
20	2528.5
25	2063
40	1159.2
50	810.4
70	419.1
80	309.2
100	176.2
120	105.9
140	66.7

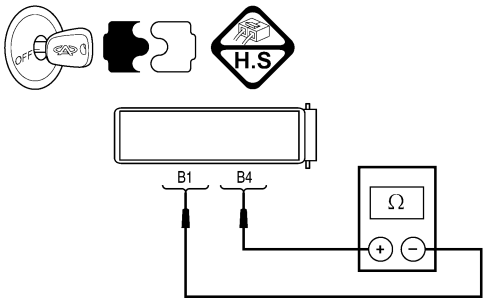

ltsmd080025

Is the check result normal?

Yes >> Go to the next step.

No >> Replace the TFT sensor.

5. CHECK A/T FLUID PRESSURE SENSOR

- Turn ignition switch on.
- With X-431 scan tool, select view TCM data stream and compare to the following table.

ITEM	CONDITION	DISPLAY VALUE
Fluid Pressure	• Ignition switch: ON • Engine: Not running	Below 0.2 bar
	• Engine: Idle • TFT: 31°C • ECT: 30°C	Approximately 0.05 bar

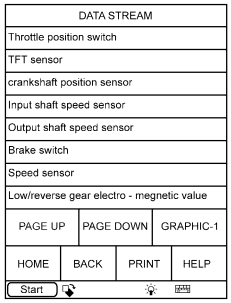

ltsmd080001t

Is the check result normal?

Yes >> Go to the next step.

No >> Replace the TCM.

Downloaded from www.Manualslib.com manuals search engine

6. CHECK DTC

- With the X-431 scan tool, read TCM DTCs.
- Refer to ″DTC Confirmation Procedure″.

Is the check result normal?

Yes >> The system is now operating properly.
Reassemble the vehicle and road test to verify the customers complaint is repaired.

No >> Replace the TCM.

Downloaded from www.Manualslib.com manuals search engine

P0657 - Solenoid Power Supply Circuit Shorted To Voltage

Electronic Valve Solenoid

TM - DP0 - EVS - 01

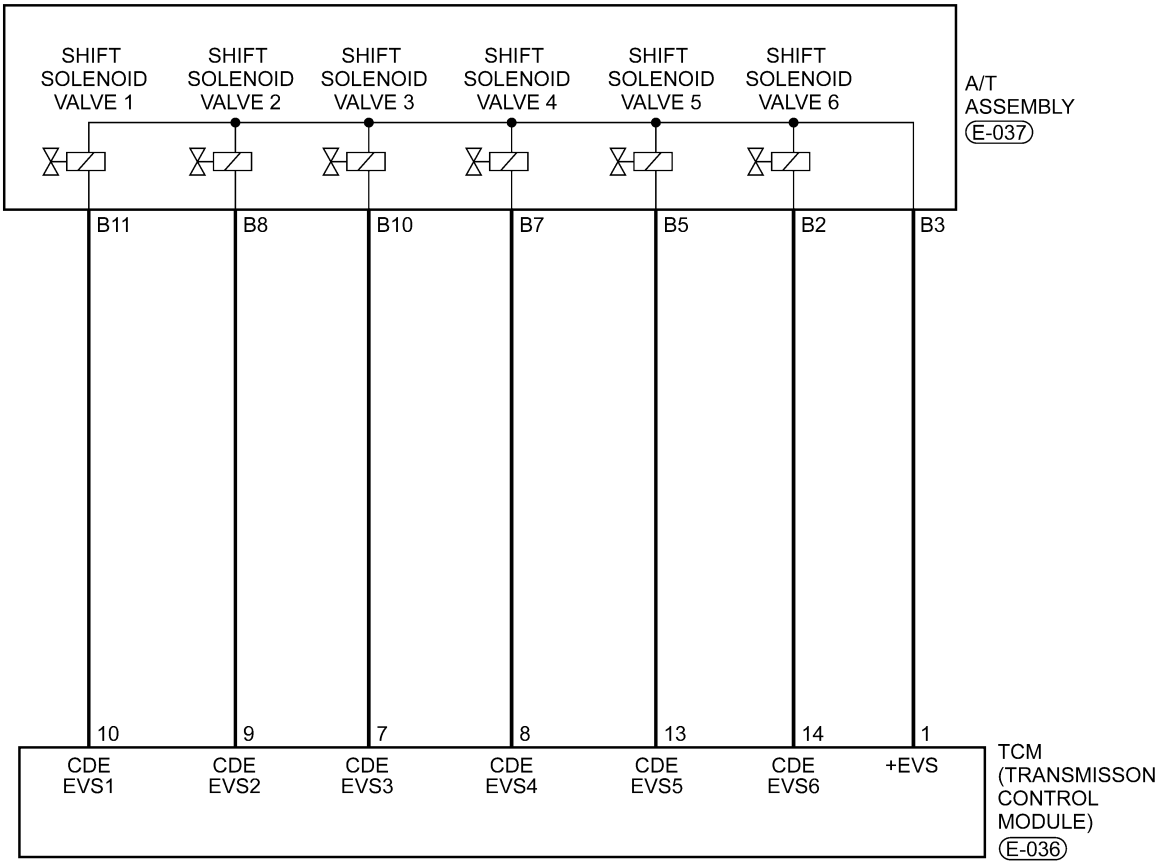

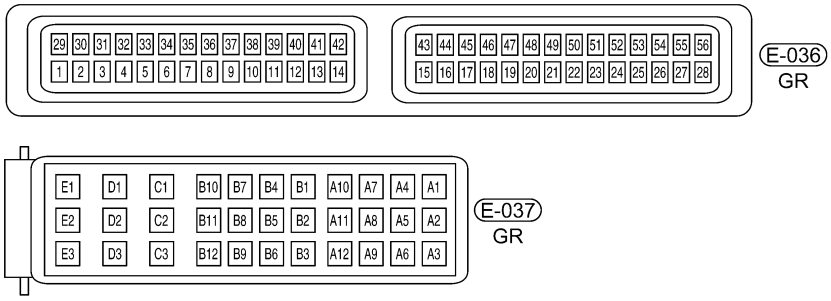

ltsmw080022t

Downloaded from www.Manualslib.com manuals search engine

On Board Diagnostic Logic

- Self-diagnosis detection logic.

DTC NO.	DTC DEFINITION	DTC DETECTION CONDITION	DTC SET CONDITION	POSSIBLE CAUSE
P0657	Solenoid power supply circuit shorted to voltage	Vehicle is driving	The Transaxle Control Module (TCM) will set this DTC when the TCM detects an improper voltage drop (short to voltage) when it tries to operate the solenoid valve.	• Harness or connectors (The sensor circuit is open or shorted) • Transaxle Control Module (TCM)

DTC Confirmation Procedure:

Before performing the following procedure, confirm that battery voltage is more than 12 V.

- Turn ignition switch off.
- Connect the X-431 scan tool to the Data Link Connector (DLC) - use the most current software available.
- Turn ignition switch on, with the scan tool, view and erase stored DTCs in the TCM.
- Start the engine and warm it to normal operating temperature.
- With the scan tool, select view DTC and data stream.
- If the DTC is detected, the DTC condition is current. Go to Diagnostic Procedure - Step 1.
- If the DTC is not detected, the DTC condition is intermittent (See Diagnostic Help and Intermittent DTC Troubleshooting in Section 08 Transaxle & Transfer Case for more information).

NOTE :
Using the appropriate diagnostic test tool, you can diagnose the TCM harness while the TCM is still connected. This will help prevent electrical connector terminal damage.

NOTE :
While performing electrical diagnosis & testing, always refer to the electrical schematics for specific circuit and component information.

Downloaded from www.Manualslib.com manuals search engine

Diagnostic Procedure

1. CHECK A/T SOLENOID SIGNAL

- With the scan tool, select view DTC and data stream for A/T.
- Start the engine.
- Monitor the gear position while driving, and compare to the following table.

TRANSAXLE GEAR POSITION/SOLENOID ACTIVATION					
SELECTOR POSITION	RANGE	SHIFT SOLENOID VALVE 1	SHIFT SOLENOID VALVE 2	SHIFT SOLENOID VALVE 3	SHIFT SOLENOID VALVE 4
P	0	-	-	#	-
R	R	-	-	-	-
N	0	-	-	#	-
D	1	-	-	#	#
	2	-	#	-	#
	3	-	-	-	-
	4	#	#	-	-

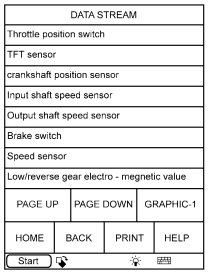

ltsmd080001t

- #: Operating component

Is the check result normal?

Yes >> The condition that caused this DTC is intermittent (See Diagnostic Help in Section 08 Transaxle & Transfer Case).

No >> Go to the next step.

2. ACTUATE TEST

- Stop the engine.
- Turn ignition switch on.
- With X-431 scan tool, perform the solenoid actuate test.
- The solenoid actuation should be heard.

Is the check result normal?

Yes >> Go to step 4.

No >> Go to the next step.

Downloaded from www.Manualslib.com manuals search engine

3. CHECK A/T ASSEMBLY AND TCM ELECTRICAL CONNECTOR

- Turn ignition switch off.
- Disconnect the A/T assembly electrical connector E-037 (1).
- Disconnect the TCM electrical connector E-036.
- Inspect the electrical connectors for damage.

Is the electrical connector OK?

Yes >> Go to the next step.

No >> Repair or replace the electrical connector as necessary.

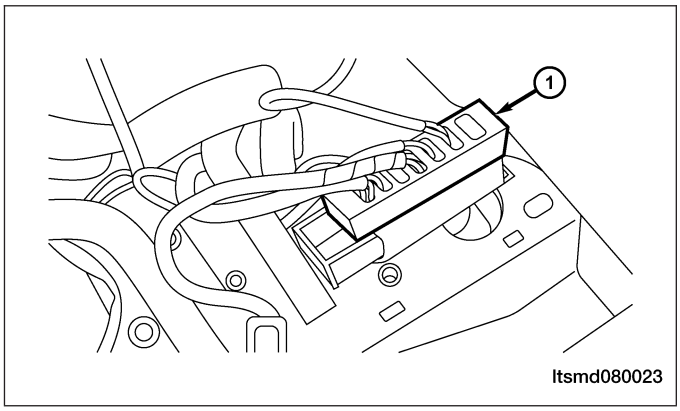

4. CHECK SOLENOID POWER SUPPLY

- Check the solenoid power circuit for battery voltage between the A/T assembly electrical connector E-037 terminal B3 and ground.

Is battery voltage present?

Yes >> Repair the circuit for a short to voltage in the harness or connectors.

No >> Go to the next step.

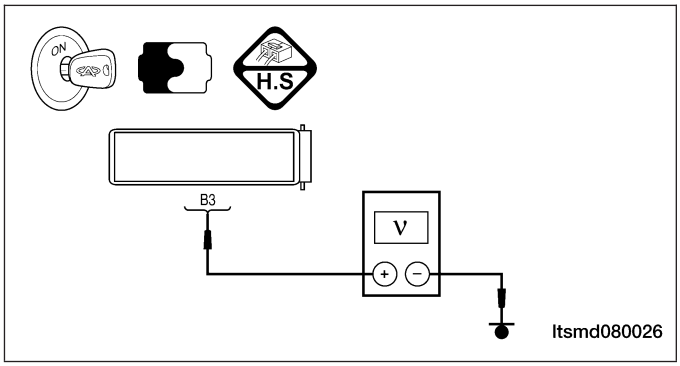

5. CHECK DTC

- Reconnect all previously disconnected electrical connectors.
- Start and operate the vehicle.
- With the X-431 scan tool, read TCM DTCs.
- Refer to ″DTC Confirmation Procedure″.

Did DTC P0657 reset?

Yes >> Replace the TCM.

No >> The system is now operating properly.
Reassemble the vehicle and road test to verify the customers complaint is repaired.

Downloaded from www.Manualslib.com manuals search engine

P0657 - Solenoid Power Supply Circuit Open

Electronic Valve Solenoid

TM - DP0 - EVS - 01

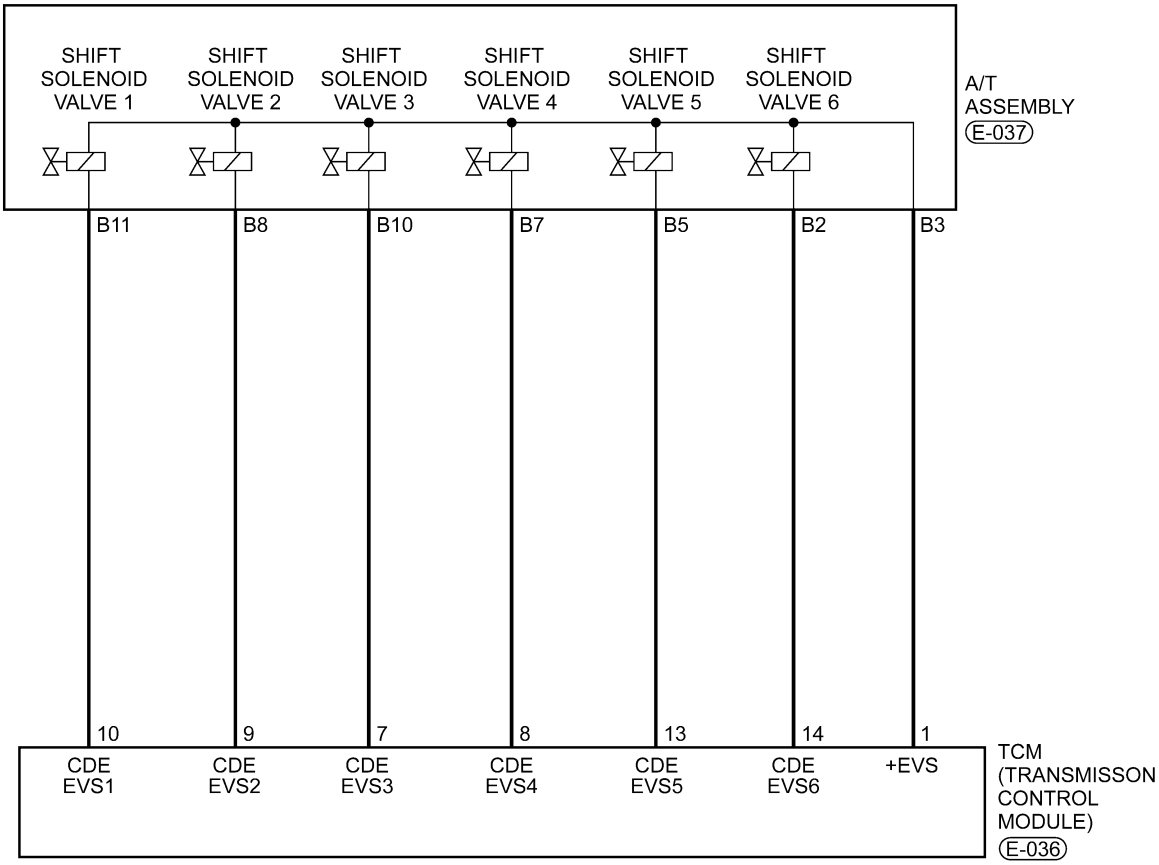

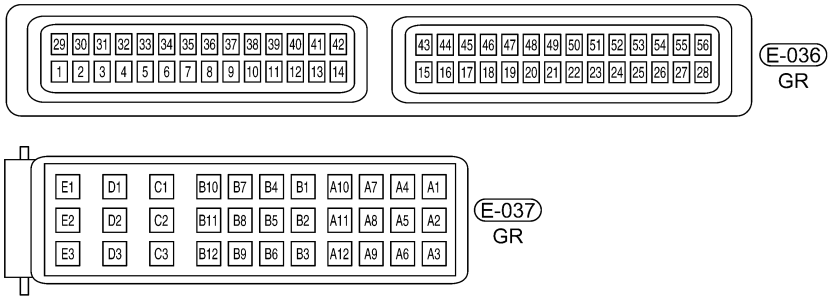

ltsmw080022t

Downloaded from www.Manualslib.com manuals search engine

On Board Diagnostic Logic

- Self-diagnosis detection logic.

DTC NO.	DTC DEFINITION	DTC DETECTION CONDITION	DTC SET CONDITION	POSSIBLE CAUSE
P0657	Solenoid power supply circuit open	Vehicle is driving	The Transaxle Control Module (TCM) will set this DTC when the TCM detects an improper voltage drop (open) when it tries to operate the solenoid valve.	• Harness or connectors (The sensor circuit is open or shorted) • TCM

DTC Confirmation Procedure:

Before performing the following procedure, confirm that battery voltage is more than 12 V.

- Connect the X-431 scan tool to the Data Link Connector (DLC) - use the most current software available.
- Turn ignition switch on, with the scan tool, view and erase stored DTCs in the TCM.
- Start the engine and warm it to normal operating temperature.
- With the scan tool, select view DTC and data stream.
- If the DTC is detected, the DTC condition is current. Go to Diagnostic Procedure - Step 1.
- If the DTC is not detected, the DTC condition is intermittent (See Diagnostic Help and Intermittent DTC Troubleshooting in Section 08 Transaxle & Transfer Case for more information).

NOTE :
Using the appropriate diagnostic test tool, you can diagnose the TCM harness while the TCM is still connected. This will help prevent electrical connector terminal damage.

NOTE :
While performing electrical diagnosis & testing, always refer to the electrical schematics for specific circuit and component information.

Downloaded from www.Manualslib.com manuals search engine

Diagnostic Procedure

1. CHECK A/T SOLENOID SIGNAL

- With the scan tool, select view DTC and data stream for A/T.
- Start the engine.
- Monitor the gear position while driving, and compare to the following table.

TRANSAXLE GEAR POSITION/SOLENOID ACTIVATION					
SELECT POSITION	RANGE	SHIFT SOLENOID VALVE 1	SHIFT SOLENOID VALVE 2	SHIFT SOLENOID VALVE 3	SHIFT SOLENOID VALVE 4
P	0	-	-	#	-
R	R	-	-	-	-
N	0	-	-	#	-
D	1	-	-	#	#
	2	-	#	-	#
	3	-	-	-	-
	4	#	#	-	-

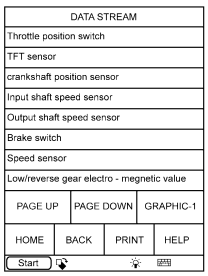

ltsmd080001t

- #: Operating component

Is the check result normal?

Yes >> The condition that caused this DTC is intermittent (See Diagnostic Help in Section 08 Transaxle & Transfer Case).

No >> Go to the next step.

2. ACTUATE TEST

- Stop the engine.
- Turn ignition switch on.
- With X-431 scan tool, perform the solenoid actuate test.
- The solenoid actuation should be heard.

Is the check result normal?

Yes >> Go to step 5.

No >> Go to the next step.

Downloaded from www.Manualslib.com manuals search engine

3. CHECK A/T ASSEMBLY ELECTRICAL CONNECTOR

- Turn ignition switch off.
- Disconnect the A/T assembly electrical connector E-037 (1).
- Inspect the electrical connector for damage.

Is the electrical connector OK?

Yes >> Go to the next step.

No >> Repair or replace the electrical connector as necessary.

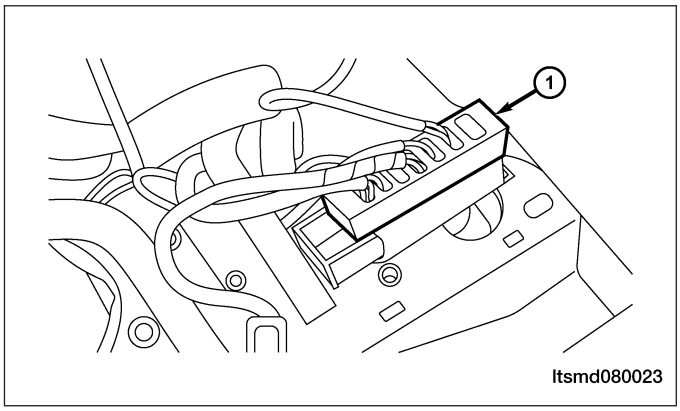

4. CHECK SOLENOID POWER SUPPLY

- Turn ignition switch on.
- Check the solenoid power circuit for battery voltage between the A/T connector E-037 terminal B3 and ground.

Is battery voltage present?

Yes >> Go to the next step.

No >> Repair or replace circuit for an open in harness or connectors.

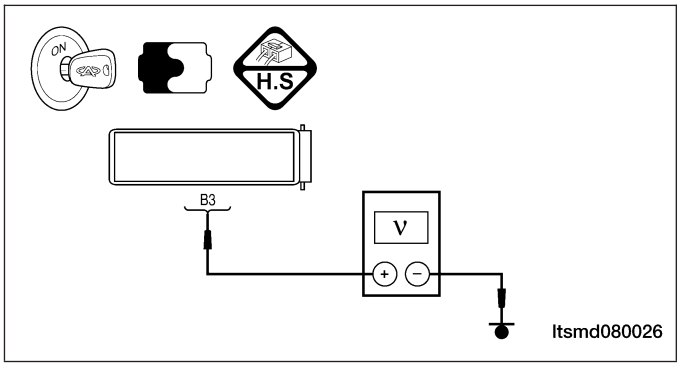

Downloaded from www.Manualslib.com manuals search engine

5. CHECK SHIFT SOLENOID VALVE 6 RESISTANCE

- Turn ignition switch off.
- Check the harness continuity between the following terminals:

SOLENOID VALVE 6 RESISTANCE BASED ON TRANSAXLE TEMPERATURE				
A/T ASSEMBLY TERMINAL	A/T ASSEMBLY TERMINAL	TEMPERATURE	CONTINUITY	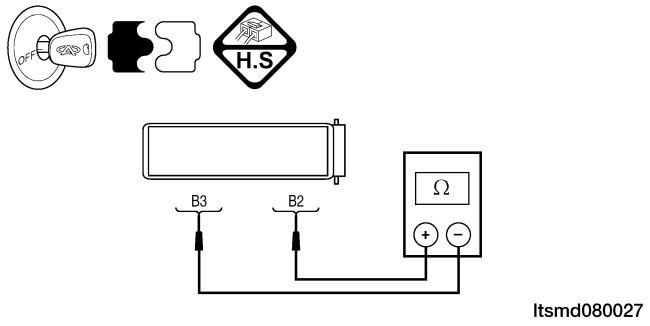
B3	B2	23°C	Yes	

Is the check result normal?

Yes >> Go to the next step.

No >> Replace solenoid valve 6.

6. CHECK DTC

- With the X-431 scan tool, read TCM DTCs.
- Refer to ″DTC Confirmation Procedure″.

Is DTC P0657 still present?

Yes >> Replace the TCM.

No >> The system is now operating properly.
Reassemble the vehicle and road test to verify the customers complaint is repaired.

Downloaded from www.Manualslib.com manuals search engine

P0705 - Multi-Function Switch: Prohibited Position

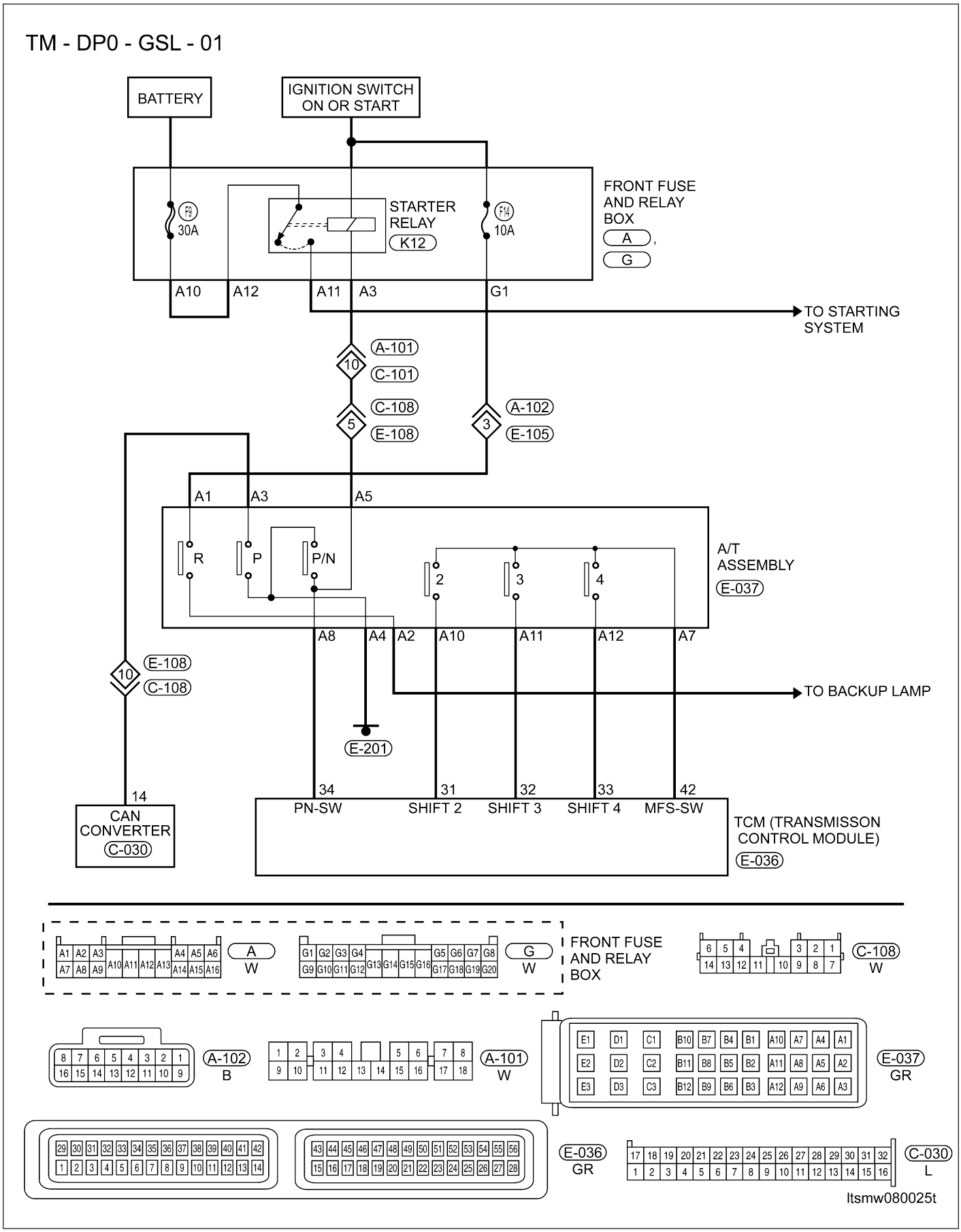

Downloaded from www.Manualslib.com manuals search engine

On Board Diagnostic Logic

- Self-diagnosis detection logic.

DTC NO.	DTC DEFINITION	DTC DETECTION CONDITION	DTC SET CONDITION	POSSIBLE CAUSES
P0705	Multi-Function switch: prohibited position	Vehicle is driving	The Transaxle Control Module (TCM) detects the voltage is out of range when moving the shift lever from the ″P″ position to the ″N″ position.	• Multi-Function Switch • Harness or connectors (The sensor circuit is open or shorted) • TCM

DTC Confirmation Procedure:

Before performing the following procedure, confirm that battery voltage is more than 12 V.

- Turn ignition switch off.
- Connect the X-431 scan tool to the Data Link Connector (DLC) - use the most current software available.
- Turn ignition switch on, with the scan tool, view and erase stored DTCs in the TCM.
- Start the engine and warm it to normal operating temperature.
- With the scan tool, select view DTC and data stream.
- If the DTC is detected, the DTC condition is current. Go to Diagnostic Procedure - Step 1.
- If the DTC is not detected, the DTC condition is intermittent (See Diagnostic Help and Intermittent DTC Troubleshooting in Section 08 Transaxle & Transfer Case for more information).

NOTE :

- If using the appropriate diagnostic test tool, you can diagnose the TCM harness while the TCM is still connected. Troubleshoot any Engine Control Module (ECM) charging/cranking DTCs before proceeding.
- Using the appropriate diagnostic test tool in this way will help prevent electrical connector terminal damage.

NOTE :

While performing electrical diagnosis & testing, always refer to the electrical schematics for specific circuit and component information.

Downloaded from www.Manualslib.com manuals search engine

Diagnostic Procedure

1. CHECK A/T SOLENOID SIGNAL

- Turn ignition switch on.
- With the scan tool, select view DTC and data stream for A/T.
- Monitor the value of the multi-function switch and compare to the following table.

TRANSAXLE RANGE SWITCH (CMF) CONDITION					
SHIFT LEVER POSITION	P/N	S2	S3	S4	
P	Close	Close	Open	Open	
R	Open	Close	Close	Close	
N	Close	Open	Close	Open	
D	Open	Open	Open	Close	
M	Close	Close	Close	Open	
+	Close	Close	Close	Open	
-	Close	Close	Close	Open	

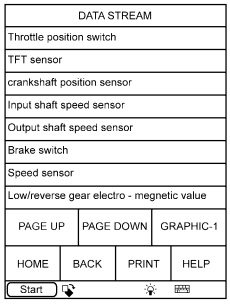

ltsmd080001t

SEQUENCE SHIFT SWITCH CONDITION		
SHIFT LEVER POSITION	SEQUENCE SHIFT UP	SEQUENCE SHIFT DOWN
R	Active	Active
P	Active	Active
N	Active	Active
D	Active	Active
M	Not Active	Not Active
+	Not Active	Active
-	Active	Not Active

Is DTC P0705 present and the status active for this DTC?

Yes >> Go to the next step.

No >> The condition that caused this DTC is intermittent (See Diagnostic Help in Section 08 Transaxle & Transfer Case).

Downloaded from www.Manualslib.com manuals search engine

2. CHECK SHIFT SWITCH VALUE

- Move the shift lever (1) to every shift position.
- Measure the voltage as follows:

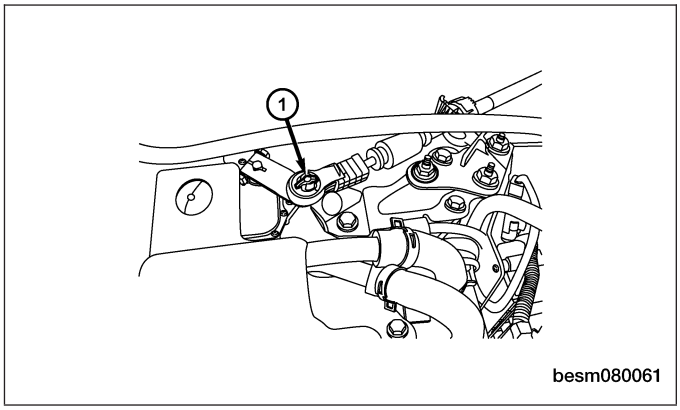

SHIFT POSITION VALUE				
TERMINAL	**S2**	**S3**	**S4**	**P/N**
POSITION	**31 - 42**	**32 - 42**	**33 - 42**	**34 - 42**
P	0	B+	B+	0
R	0	0	0	B+
N	B+	0	B+	0
D	B+	B+	0	B+
3	B+	0	0	B+
2	0	0	B+	B+

Do the circuits check OK, and do the reverse lamps also illuminate?

Yes >> The transaxle range switch is normal.
Reassemble the vehicle and road test to verify the customers complaint is repaired.

No >> Go to the next step.

Downloaded from www.Manualslib.com manuals search engine

3. CHECK RANGE SWITCH RESISTANCE

- Turn ignition switch off.
- Disconnect the TCM electrical connector.
- Measure the resistance as follows:

CHECK TCM CONNECTOR SHIFT RANGE SWITCH ON OR OFF CONDITION				
TERMINAL	**S2**	**S3**	**S4**	**P/N**
POSITION	**31 - 42**	**32 - 42**	**33 - 42**	**34 - 42**
P	0	∞	∞	0
R	0	0	0	∞
N	∞	0	∞	0
D	∞	∞	0	∞
3	∞	0	0	∞
2	0	0	∞	∞

CHECK TRANSAXLE ASSEMBLY CONNECTOR SHIFT RANGE SWITCH ON OR OFF CONDITION					
TERMINAL	**S2**	**S3**	**S4**	**R**	**P/N**
POSITION	A10 - A7	A11 - A7	A12 - A7	A1 - A2	A8 - A4
P	0	∞	∞	∞	0
R	0	0	0	0	∞
N	∞	0	∞	∞	0
D	∞	∞	0	∞	∞
3	∞	0	0	∞	∞
2	0	0	∞	∞	∞

Does the switch check OK?

Yes >> If the test results for the TCM electrical connector is normal, and the test results for the transaxle assembly is not normal, repair the circuits between the TCM electrical connector and transaxle shift range switch.

No >> If the test results for the TCM electrical connector pin 34 and pin 42 are normal, and the test results for the transaxle range switch pin A8 and A4 are normal, repair the circuit between the TCM electrical connector pin 34 and transaxle range switch electrical connector pin A8.
If the test results are not normal in one switch position, replace the transaxle range switch. If the test results are not normal at two or more switch positions, adjust the transaxle range switch before replacing it. After adjusting the transaxle range switch, verify the adjustment with the table. If the test results are still not normal, replace the transaxle range switch.

Downloaded from www.Manualslib.com manuals search engine

P0710 - Fluid Temperature Sensor

FTS

TM - DP0 - FTS - 01

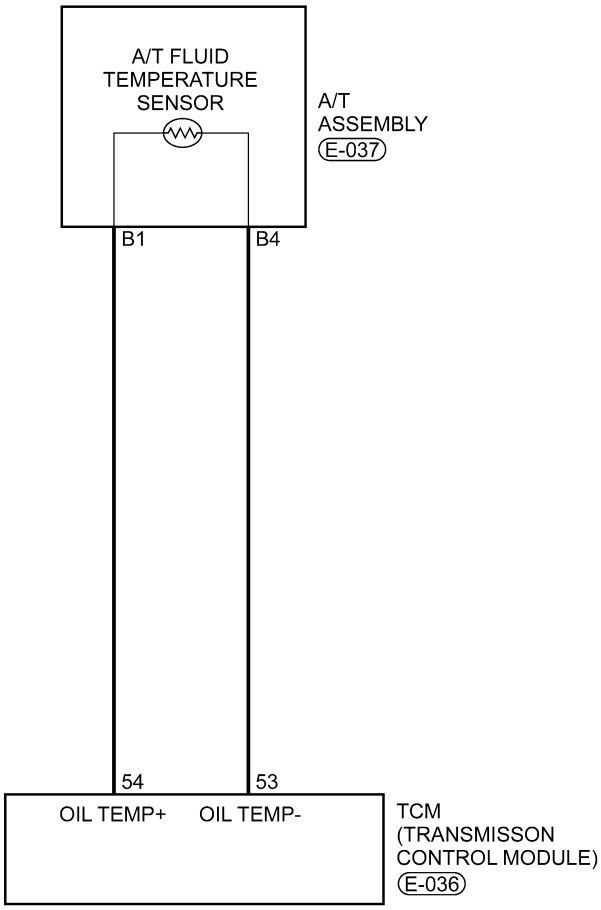

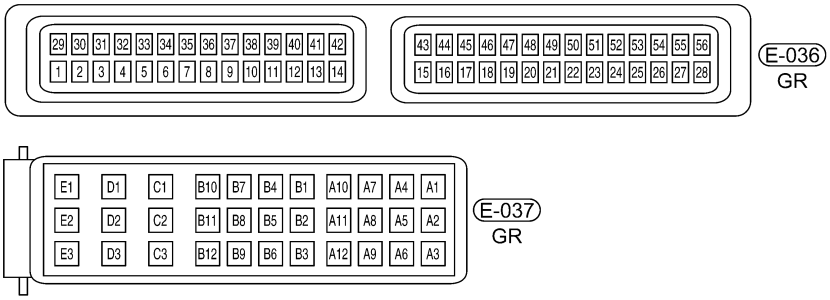

ltsmw080018t

Downloaded from www.Manualslib.com manuals search engine

On Board Diagnostic Logic

- Self-diagnosis detection logic.

DTC NO.	DTC DEFINITION	DTC DETECTION CONDITION	DTC SET CONDITION	POSSIBLE CAUSE
P0710	Transaxle Fluid Temperature (TFT) sensor	Engine is running	The Transaxle Control Module (TCM) will set this DTC when the transaxle temperature does not reach a normal operating temperature within a given time frame.	• TFT sensor • Harness or connectors (The sensor circuit is open or shorted) • Transaxle Control Module (TCM)

DTC Confirmation Procedure:

Before performing the following procedure, confirm that battery voltage is more than 12 V.

- Connect the X-431 scan tool to the Data Link Connector (DLC) - use the most current software available.
- Turn ignition switch on, with the scan tool, view and erase stored DTCs in the TCM.
- Start the engine and warm it to normal operating temperature.
- With the scan tool, select view DTC and data stream.
- If the DTC is detected, the DTC condition is current. Go to Diagnostic Procedure - Step 1.
- If the DTC is not detected, the DTC condition is intermittent (See Diagnostic Help and Intermittent DTC Troubleshooting in Section 08 Transaxle & Transfer Case for more information).

NOTE :
While performing electrical diagnosis & testing, always refer to the electrical schematics for specific circuit and component information.

Downloaded from www.Manualslib.com manuals search engine

Diagnostic Procedure

1. CHECK A/T FLUID TEMPERATURE SENSOR RESISTANCE

- Turn the ignition switch off.
- Disconnect A/T assembly connector E-037.
- Check TFT sensor resistance between sensor terminals, component side.

TFT SENSOR RESISTANCE	
TEMPERATURE (°C)	RESISTANCE Ω
-50	93917
-30	28237.4
-10	9826
0	6079
20	2528.5
25	2063
40	1159.2
50	810.4
70	419.1
80	309.2
100	176.2
120	105.9
140	66.7

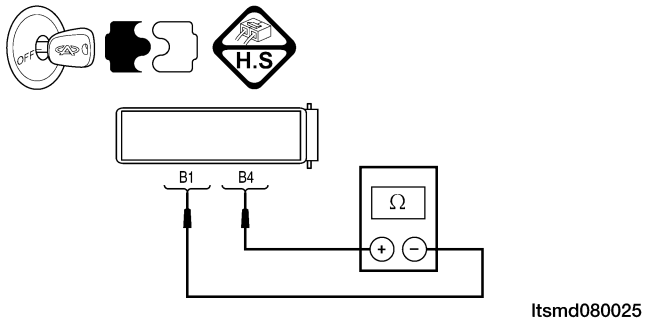

Is the check result normal?

Yes >> Go to the next step.

No >> Replace the TFT sensor.

Downloaded from www.Manualslib.com manuals search engine

2. CHECK TFT SENSOR POWER SUPPLY

- Turn ignition switch on.
- Check power supply between A/T assembly terminal B1 and ground.

TFT SENSOR VOLTAGE			
A/T ASSEMBLY CONNECTOR TERMINAL	TERMINAL	VOLTAGE	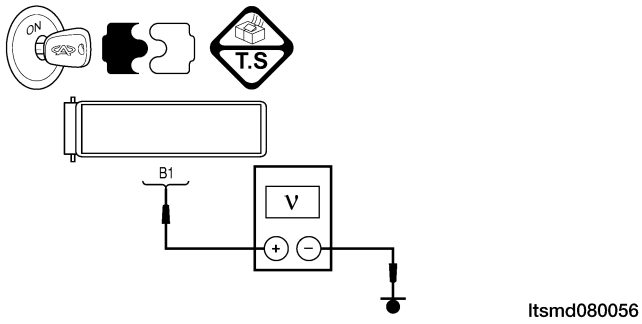
B1	Ground	5 V	

- 5 V should exist.

Is the check result normal?

Yes >> Go to the next step.

No >> Repair or replace the open circuit or short to power or short to ground in harness or connectors. If circuit is normal, replace TCM.

3. CHECK TFT SENSOR GROUND CIRCUIT

- Turn ignition switch off.
- Disconnect TCM connector.
- Check continuity between TFT sensor connector E-037 and TCM connector E-036.
- Check TFT sensor ground circuit for a short to ground and short to power supply.

Is the check result normal?

Yes >> Go to the next step.

No >> Repair or replace the open circuit or short to ground or short to power supply in harness or connectors.

4. CHECK DTC

- With the X-431 scan tool, read TCM DTCs.
- Refer to ″DTC Confirmation Procedure″.

Is DTC P0710 still present?

Yes >> Replace the TCM.

No >> The system is now operating properly.
Reassemble the vehicle and road test to verify the customers complaint is repaired.

Downloaded from www.Manualslib.com manuals search engine

P0715 - Turbine Speed Sensor Affected By Interference

TM - DP0 - TSS - 01

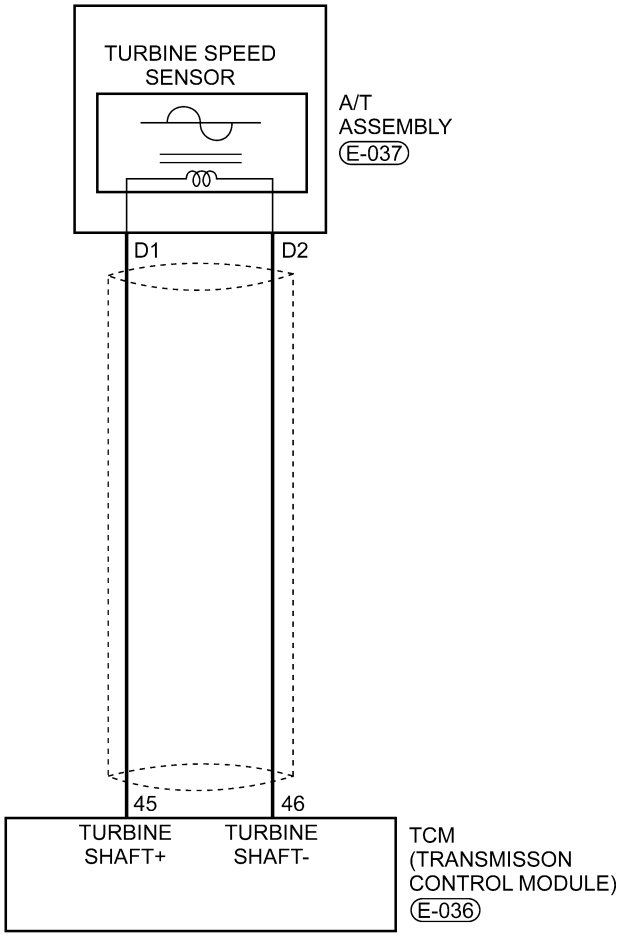

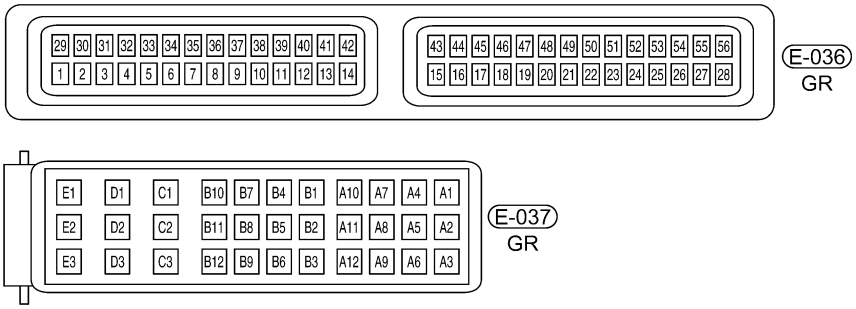

ltsmw080017t

Downloaded from www.Manualslib.com manuals search engine

On Board Diagnostic Logic

- Self-diagnosis detection logic.

DTC NO.	DTC DEFINITION	DTC DETECTION CONDITION	DTC SET CONDITION	POSSIBLE CAUSES
P0715	Turbine speed sensor affected by interference	Engine is running	The Transaxle Control Module (TCM) will set this DTC when the turbine speed signal is not present.	• Turbine speed sensor • Harness or connectors (The sensor circuit is open or shorted) • TCM

DTC Confirmation Procedure:

Before performing the following procedure, confirm that battery voltage is more than 12 V.
- Turn ignition switch off.
- Connect the X-431 scan tool to the Data Link Connector (DLC) - use the most current software available.
- Turn ignition switch on.
- With the scan tool, record and erase stored DTCs in the TCM.
- Start engine and warm it to normal operating temperature.
- With the scan tool, select view DTC and data stream.
- If the DTC is detected, the DTC condition is current. Go to Diagnostic Procedure - Step 1.
- If the DTC is not detected, the DTC condition is intermittent (See Diagnostic Help and Intermittent DTC Troubleshooting in Section 08 Transaxle & Transfer Case for more information).

NOTE :
- If using the appropriate diagnostic test tool, you can diagnose the TCM harness while the TCM is still connected.
- Using the appropriate diagnostic test tool in this way will help prevent electrical connector terminal damage.

NOTE :
While performing electrical diagnosis & testing, always refer to the electrical schematics for specific circuit and component information.

Diagnostic Procedure

1. CHECK DTC AND TURBINE SPEED SENSOR DATA STREAM

- With the scan tool, select view DTC and data stream for A/T.
- Start the engine.
- Monitor the value of turbine speed sensor while driving.

Is the check result normal and DTC not present?

Yes >> The condition that caused this DTC is intermittent (See Diagnostic Help in Section 08 Transaxle & Transfer Case).

No >> Go to the next step.

Downloaded from www.Manualslib.com manuals search engine

2. CHECK TURBINE SPEED SENSOR REFERENCE VOLTAGE

- Turn ignition switch on.
- Check reference voltage between A/T assembly terminal D1, D2 and ground.

TURBINE SPEED SENSOR VOLTAGE			
A/T ASSEMBLY CONNECTOR TERMINAL	GROUND	VOLTAGE	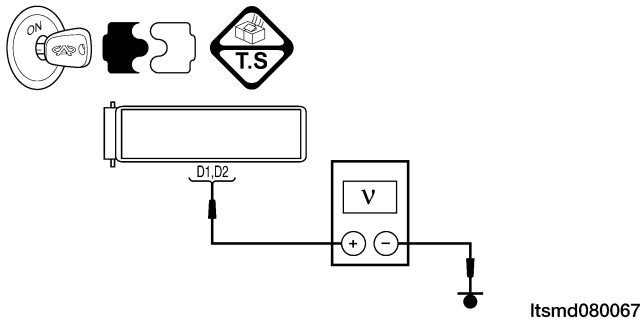
D1	Ground	2 V	
D2			

- 2 V should exist.

Is 2 V present at each electrical connector pin?

Yes >> Go to the next step.

No >> Repair or replace the open circuit or short to power or short to ground in harness or connectors. If circuit is normal, replace the TCM.

3. CHECK TURBINE SPEED SENSOR RESISTANCE

- Check the resistance of the turbine speed sensor between the turbine speed sensor electrical connector pin D1 and D2, component side.

TURBINE SPEED SENSOR RESISTANCE		
TURBINE SPEED SENSOR RESISTANCE BASED ON TRANSAXLE TEMPERATURE		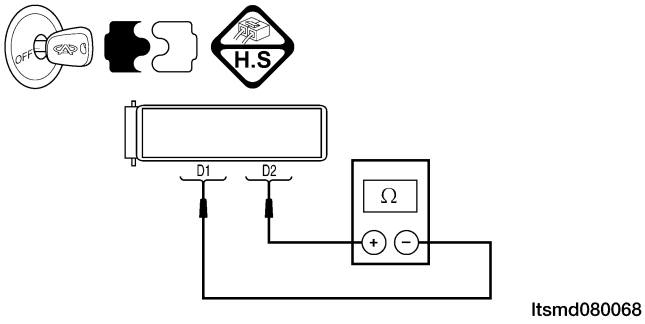
TERMINAL	RESISTANCE 23°C	
D1 - D2	260 - 340 Ω	

Is the check result normal?

Yes >> Go to the next step.

No >> Replace the turbine speed sensor.

Downloaded from www.Manualslib.com manuals search engine

4. CHECK DTC

- With the X-431 scan tool, read TCM DTCs.
- Refer to ″DTC Confirmation Procedure″.

Is DTC P0715 present?

Yes >> Replace the TCM.

No >> The system is now operating properly.
Reassemble the vehicle and road test to verify the customers complaint is repaired.

Downloaded from www.Manualslib.com manuals search engine

P0730 - Ratio Of Transaxle Error

TM - DP0 - VSS - 01

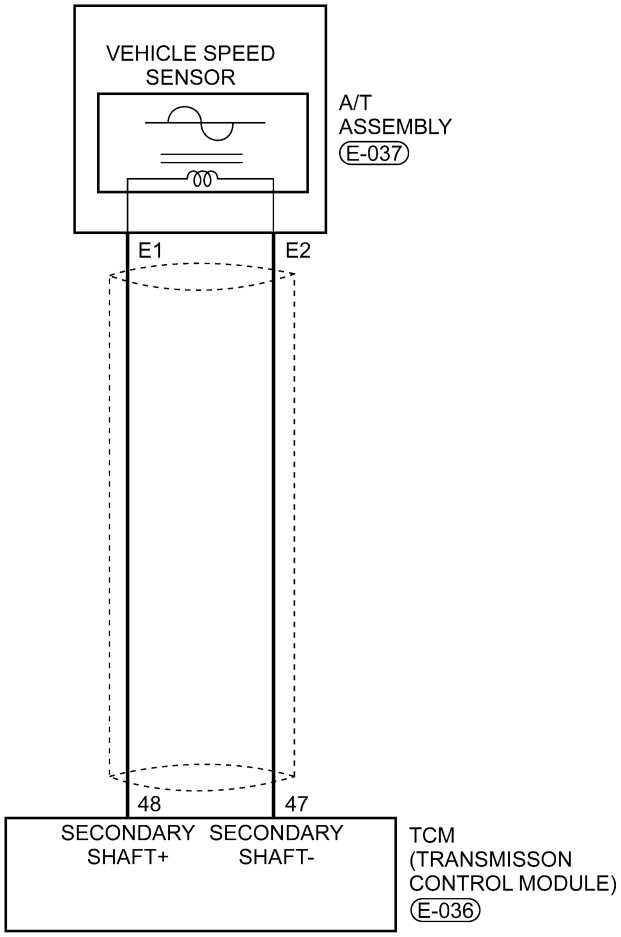

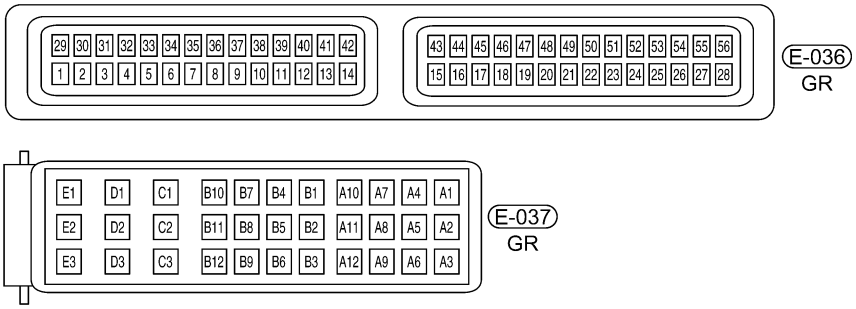

ltsmw080016t

Downloaded from www.Manualslib.com manuals search engine

Operating Components Condition

- Related Operating Components

RELATED OPERATING COMPONENT									
GEARSHIFT LEVER POSITION		GEAR RATIO	ENGINE START	PARKING MECHANISM	DRIVE		LOCK		
					2, 3, 4 GEAR CLUTCH (E2)	REVERSE AND 1-3 GEAR CLUTCH (E1)	4 GEAR BRAKE (F1)	REVERSE GEAR BRAKE (F2)	1, 2 GEAR BRAKE (F3)
P	Parking	-	Enabled	√	-	√	-	-	-
R	Reverse Gear	-2.45	-	-	-	√	-	√	-
N	Neutral Gear	-	Enabled	-	-	√	-	-	-
D	Gear 1	2.75	-	-	-	√	-	-	√
	Gear 2	1.5	-	-	-	-	-	-	√
	Gear 3	1.000	-	-	-	√	-	-	-
	Gear 4	0.71	-	-	-	-	√	-	-

√ **Operating components**

08

On Board Diagnostic Logic

- Self-diagnosis detection logic.

DTC NO.	DTC DEFINITION	DTC DETECTION CONDITION	DTC SET CONDITION	POSSIBLE CAUSE
P0730	Ratio of transaxle error	Vehicle is driving	The Transaxle Control Module (TCM) detects that a Gear Ratio Error is already present. The DTC is set if the fault happened within seconds of a shift.	• Input shaft speed sensor • Output shaft speed sensor • The retainer of deceleration clutch • Transfer case driven and drive gear • 2, 3, 4 gear clutch (E2) • Reverse and 1 - 3 gear clutch (E1) • 4 gear brake (F1) • Reverse gear brake (F2) • 1, 2 gear brake (F3) • Noise interference

DTC Confirmation Procedure:

Before performing the following procedure, confirm that battery voltage is more than 12 V.

- Connect the X-431 scan tool to the Data Link Connector (DLC) - use the most current software available.
- Turn ignition switch on, with the scan tool, view and erase stored DTCs in the TCM.
- Start the engine and warm it to normal operating temperature.
- With the scan tool, select view DTC and data stream.
- If the DTC is detected, the DTC condition is current. Go to Diagnostic Procedure - Step 1.
- If the DTC is not detected, the DTC condition is intermittent (See Diagnostic Help and Intermittent DTC Troubleshooting in Section 08 Transaxle & Transfer Case for more information).

Downloaded from www.Manualslib.com manuals search engine

NOTE :
Checking the automatic transaxle fluid quality and fluid level is the most basic check of the automatic transaxle. The fluid check is also an important inspection to determine if the transaxle will need to be disassembled.

CAUTION:
The burnt scent of ATF fluid indicates that the transaxle fluid is contaminated. The tiny particles in the fluid pan indicate that the transaxle is worn and it will be necessary to overhaul the transaxle.

NOTE :
While performing electrical diagnosis & testing, always refer to the electrical schematics for specific circuit and component information.

Diagnostic Procedure

1. CHECK FLUID QUALITY, FLUID LEVEL AND DTC

- Drive the vehicle until the TFT reaches working temperature (70° - 80°C).
- Park the vehicle on level ground.
- Shift the gear selector lever to all gear positions once, stay in one gear about 5 seconds, then shift to gear "N".
- Clean and check the outside of dipstick and remove the dipstick to check the fluid level.
- With the scan tool, select view DTC and data stream for A/T.
- Start the engine.
- Monitor the value of the gear position as indicated in the following table while driving:

SEQUENCE SOLENOID (EVS) CONDITION						
LEVER POSITION	EVS					
	EVS1	EVS2	EVS3	EVS4	EVS5	EVS6
R	Not active	Not active	Not active	Not active	Not active	Not active
N/P	Not active	Not active	Active	Not active	Not active	Not active
1	Not active	Not active	Active	Active	Not active	Not active
2	Not active	Active	Not active	Active	Not active	Not active
3	Not active	Not active	Not active	Not active	Not active	Not active
4	Active	Active	Not active	Not active	Not active	Not active

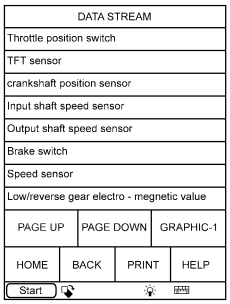

ltsmd080001t

Is the check result not normal and DTC P0730, DTC P0715 or DTC P0720 present?

Yes >> If DTC P0715 is present, see DTC P0715 diagnostic procedure.
If DTC P0720 is present, see DTC P0720 diagnostic procedure.

No >> Go to the next step.

Downloaded from www.Manualslib.com manuals search engine

2. HYDRAULIC TEST

- Preheat the transaxle fluid to 80° - 100°C.
- Lift the vehicle until the wheels can rotate freely.
- Connect the special fluid pressure gage onto the fluid pressure measurement port as (3).

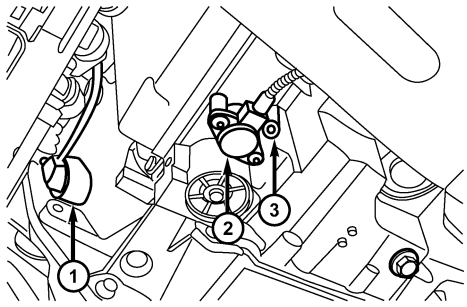

ltsmd080021

CONNECTOR AND TEST CAVITY			
CONNECTOR AND CAVITY	1	2	3
Figure name	Output speed sensor	Fluid pressure sensor	Fluid pressure test port

STANDARD FLUID PRESSURE TEST		
MEASURE STATUS	ENGINE SPEED (RPM)	STANDARD FLUID PRESSURE (BAR)
Gear lever position	Not running	Below 0.2
D/R	820 RPM	2.6
D/R	1400 RPM	8.7

- In accordance with the shown status of standard fluid pressure measurement table, measure the fluid pressure of measurement port. The measurement of port should be within the standard range.
- If some measurement values is beyond the standard range, please refer to the fluid pressure measurement and diagnosis table for causes.

Is the check result normal?

Yes >> Go to step 5 for disc or plate abrasion.

No >> Go to the next step.

3. CHECK VALVE BODY ASSEMBLY AND FLUID PUMP AND PIPELINE

- Turn the ignition switch off.
- Remove and disassemble the DP0 Automatic Transaxle Assembly (See Automatic Transaxle Removal & Installation in Section 08 Transaxle & Transfer Case).
- Check valve body and fluid pump and pipeline.

Is the check result normal?

Yes >> Go to the next step.

No >> Replace the damaged components as needed.

Downloaded from www.Manualslib.com manuals search engine

4. COMPRESSED AIR TEST

- Check low speed clutch system: Low speed clutch piston should be active and maintain pressure when compressed air is applied to the fluid hole.
- Check reverse/low brake clutch system: Low speed clutch piston should be active and maintain pressure when compressed air is applied to the fluid hole.

Is the check result normal?

Yes >> Go to the next step for disc or plate abrasion.

No >> Replace the damaged components as needed.

5. CHECK CLUTCH SYSTEM

- Check low speed clutch system:
  - 2, 3, 4 gear clutch (E2)
  - Reverse and 1 - 3 gear clutch (E1)
  - Check clutch plate
  - Check clutch disc
  - Snap ring
  - Clutch reaction disc
  - D-Ring
  - Spring retainer

Is the check result normal?

Yes >> Go to the next step.

No >> Replace the damaged components.

6. CHECK BRAKE SYSTEM

- Check reverse/low brake system:
  - 4 gear brake (F1)
  - Reverse gear brake (F2)
  - 1, 2 gear brake (F3)
  - Check brake plate
  - Check brake disc
  - Central support
  - Snap ring
  - Spring retainer
  - Brake piston

Is the check result normal?

Yes >> Go to the next step.

No >> Replace the damaged components.

Downloaded from www.Manualslib.com manuals search engine

7. CHECK DTC

- Assemble all the disassembled components.
- Install the Automatic Transaxle Assembly (See Automatic Transaxle Removal & Installation in Section 08 Transaxle & Transfer Case).
- Fill with new ATF.
- Fill the ATF from the refilling tube.
- Refit the hose connector disassembled in step 1 and refit the dipstick (clean the dipstick before refit).
- Shift the gear selector lever to each gear position and then shift to gear “N”.
- Drive the vehicle until the ATF reached working temperature (70° - 80°C) and re-check the fluid level. The fluid level must be within the HOT range of dipstick.
- Refit the checking dipstick of transaxle.
- With the X-431 scan tool, read TCM DTCs.
- Refer to ″DTC Confirmation Procedure″.

Is DTC P0730 still present?

Yes >> Replace the TCM.

No >> The system is now operating properly.

Downloaded from www.Manualslib.com manuals search engine

P0753 - Shift Solenoid Valve 1 (SSV1) Open Circuit Or Short To Power Supply Or Short To Ground

TM - DP0 - EVS - 01

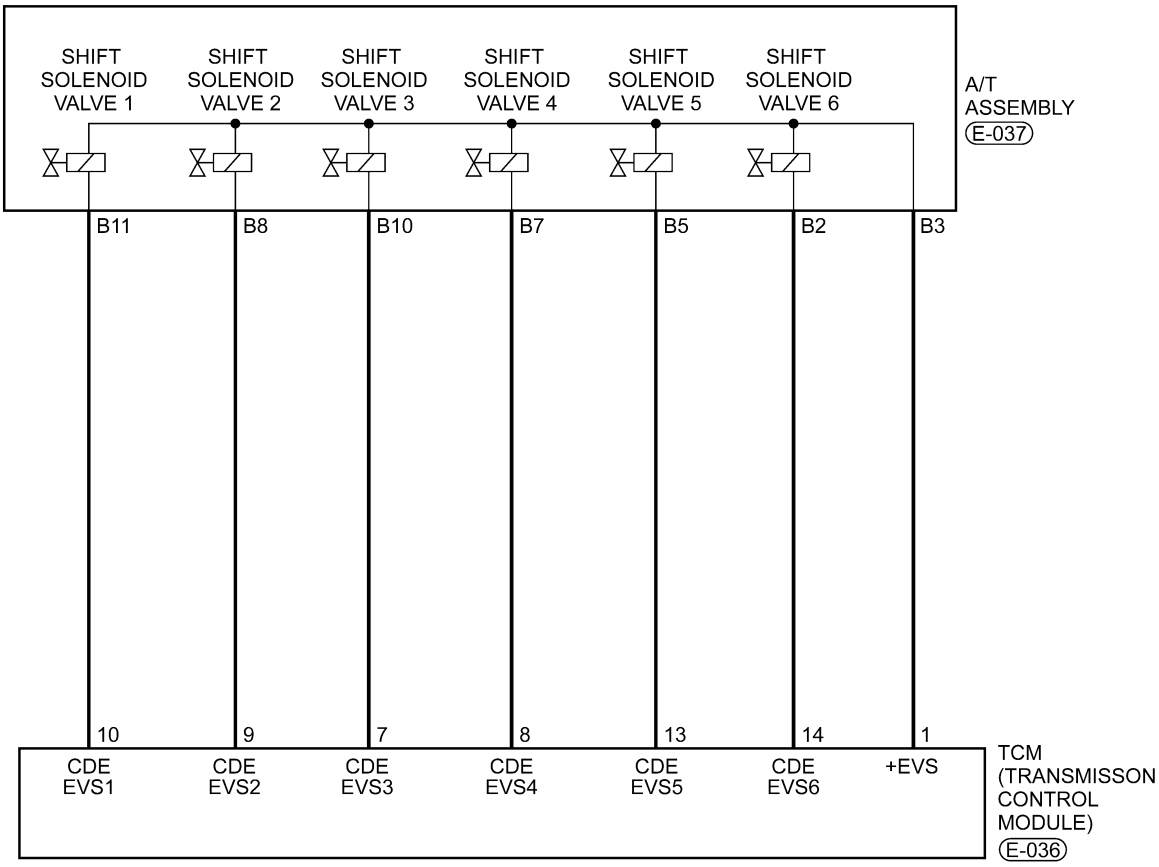

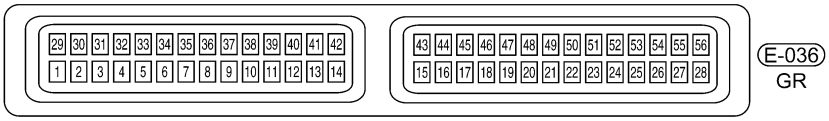

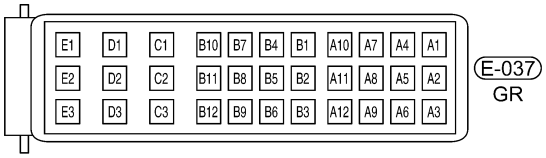

ltsmw080022t

Downloaded from www.Manualslib.com manuals search engine

On Board Diagnostic Logic

- Self-diagnosis detection logic.

DTC NO.	DTC DEFINITION	DTC DETECTION CONDITION	DTC SET CONDITION	POSSIBLE CAUSES
P0753	Shift Solenoid Valve 1 (SSV1) short to power supply	Vehicle is driving	The Transaxle Control Module (TCM) will set this DTC when the TCM detected an improper voltage drop when it tries to operate the solenoid valve.	• Shift Solenoid Valve 1 (SSV1) • Harness or connectors (The sensor circuit short to power supply) • Transaxle Control Module (TCM)
P0753	Shift Solenoid Valve 1 (SSV1) open or short to ground circuit	Vehicle is driving	The Transaxle Control Module (TCM) will set this DTC when the TCM detects an improper voltage drop when it tries to operate the solenoid valve.	• Shift Solenoid Valve 1 (SSV1) • Harness or connectors (The sensor circuit is open or shorted) • Transaxle Control Module (TCM)

DTC Confirmation Procedure:

Before performing the following procedure, confirm that battery voltage is more than 12 V.

- Turn ignition switch off.
- Connect the X-431 scan tool to the Data Link Connector (DLC) - use the most current software available.
- Turn ignition switch on.
- With the scan tool, record and erase stored DTCs in the TCM.
- Start engine and warm it to normal operating temperature.
- With the scan tool, select view DTC and data stream.
- If the DTC is detected, the DTC condition is current. Go to Diagnostic Procedure - Step 1.
- If the DTC is not detected, the DTC condition is intermittent (See Diagnostic Help and Intermittent DTC Troubleshooting in Section 08 Transaxle & Transfer Case for more information).

NOTE :

- If using the appropriate diagnostic test tool, you can diagnose the TCM harness while the TCM is still connected.
- Using the appropriate diagnostic test tool in this way will help prevent electrical connector terminal damage.

NOTE :

While performing electrical diagnosis & testing, always refer to the electrical schematics for specific circuit and component information.

Downloaded from www.Manualslib.com manuals search engine

Diagnostic Procedure

1. CHECK A/T SOLENOID SIGNAL

- With the scan tool, select view DTC and data stream for A/T.
- Start the engine.
- Monitor the value of the gear position as indicated in the following table while driving:

SEQUENCE SOLENOID (EVS) CONDITION						
LEVER POSITION	EVS					
	EVS1	EVS2	EVS3	EVS4	EVS5	EVS6
R	Not active	Not active	Not active	Not active	Not active	Not active
N/P	Not active	Not active	Active	Not active	Not active	Not active
1	Not active	Not active	Active	Active	Not active	Not active
2	Not active	Active	Not active	Active	Not active	Not active
3	Not active	Not active	Not active	Not active	Not active	Not active
4	Active	Active	Not active	Not active	Not active	Not active

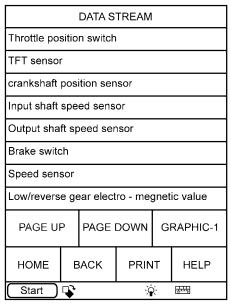

ltsmd080001t

Is the check result normal?

Yes >> The condition that caused this DTC is intermittent (See Diagnostic Help in Section 08 Transaxle & Transfer Case).

No >> Go to the next step.

2. ACTUATE TEST

- With X-431, perform the solenoid actuate test.
- The solenoid should be heard.

Is the check result normal?

Yes >> Go to step 6.

No >> Go to the next step.

Downloaded from www.Manualslib.com manuals search engine

3. CHECK SHIFT SOLENOID VALVE 1 (SSV1) RESISTANCE

- Check SSV1 resistance as follows:

SHIFT SOLENOID COMPONENTS		
NUMBER	SOLENOID	
1	Shift Solenoid Valve 1	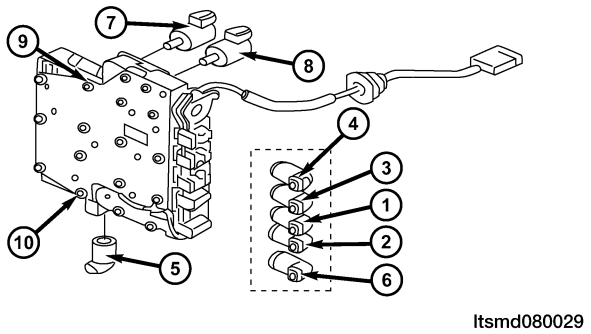
2	Shift Solenoid Valve 2	
3	Shift Solenoid Valve 3	
4	Shift Solenoid Valve 4	
5	Shift Solenoid Valve 5	
6	Shift Solenoid Valve 6	
7	Pressure Adjust Solenoid Valve	
8	Torque Converter Lock Solenoid Valve	
9	Manual Valve	
10	Valve Body	

- Check SSV1 resistance as shown in the following table:

SHIFT SOLENOID VALVE	A/T ASSEMBLY TERMINAL	
VALVE 1 (SSV1)	B11 - B3	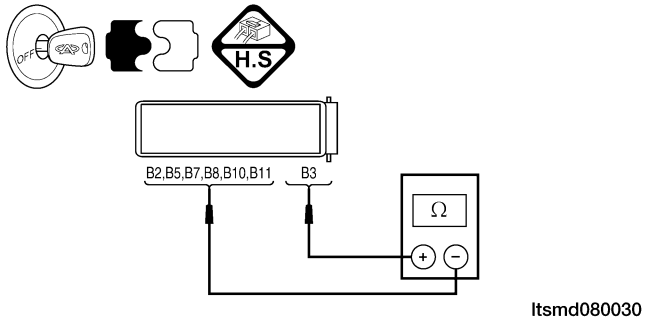
VALVE 2 (SSV2)	B8 - B3	
VALVE 3 (SSV3)	B10 - B3	
VALVE 4 (SSV4)	B7 - B3	
VALVE 5 (SSV5)	B5 - B3	
VALVE 6 (SSV6)	B2 - B3	
RESISTANCE (23°C)	38 - 42 (Ω)	

Is the check result normal?

Yes >> Replace the valve with a known good one.
With X-431, perform the solenoid actuate test.
– If the solenoid can be heard, Go to step 6.
– If the solenoid can't be heard, Go to the next step.

No >> Replace the damaged solenoid valve.

Downloaded from www.Manualslib.com manuals search engine

4. CHECK SHIFT SOLENOID VALVE 1 (SSV1) POWER SUPPLY

- Turn the ignition switch on.
- Check power supply between shift solenoid valve 1 (SSV1) E-037, terminal B11 and ground in the A/T assembly connector E-037.
- Voltage should be more than 12 V.

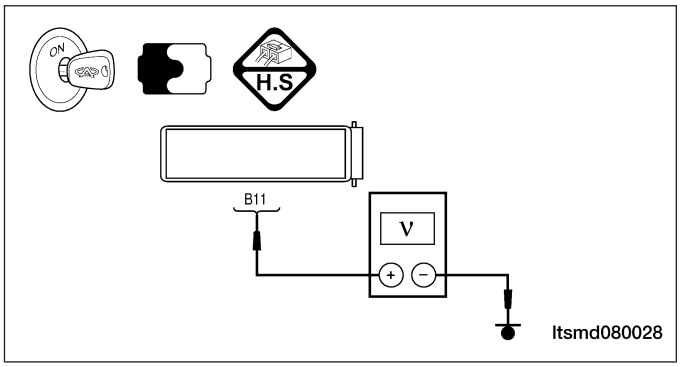

- Or using the appropriate diagnostic test tool and a digital multimeter perform the following:
- Check the EVS1 solenoid supply voltage between TCM pin 1 and TCM pin 10 when activating the EVS1 solenoid and deactivating the EVS1 solenoid.
- Check the shift solenoid control signal. Check the voltage of the shift solenoid in each shift position.
- Check the voltage of the EVS1 solenoid supply circuit between the transaxle assembly electrical connector pin B3 and pin B11.

SEQUENCE SOLENOID (EVS) CONDITION						
LEVER POSITION	TCM TERMINAL					
	EVS1	EVS2	EVS3	EVS4	EVS5	EVS6
	1 - 10	1 - 9	1 - 7	1 - 8	1 - 13	1 - 14
R	0 V	0 V	0 V	0 V	0 V	0 V
N/P	0 V	0 V	+12 V	0 V	0 V	0 V
1	0 V	0 V	+12 V	+12 V	0 V	0 V
2	0 V	+12 V	0 V	+12 V	0 V	0 V
3	0 V	0 V	0 V	0 V	0 V	0 V
4	+12 V	+12 V	0 V	0 V	0 V	0 V

Is the check result normal?

Yes >> Go to the next step.

No >> Repair or replace the open circuit or short to ground in harness or connectors.

Downloaded from www.Manualslib.com manuals search engine

5. CHECK SHIFT SOLENOID VALVE 1 (SSV1) CONTROL CIRCUIT

- Turn the ignition switch off.
- Disconnect TCM connector.
- Disconnect A/T assembly connector.
- Turn the ignition switch on.
- Check harness for short to power supply.

A/T ASSEMBLY CONNECTOR E-037 TERMINAL	TCM CONNECTOR E-036 TERMINAL	VOLTAGE
B11	10	Should not exist

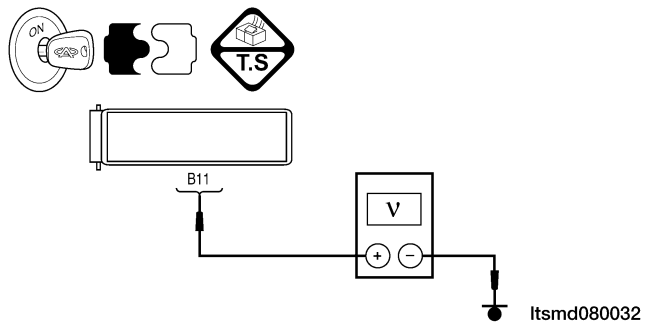

- Check the harness for an open or short to ground in harness or connectors.

A/T ASSEMBLY CONNECTOR E-037 TERMINAL	TCM CONNECTOR E-036 TERMINAL	CONTINUITY
B11	10	Yes

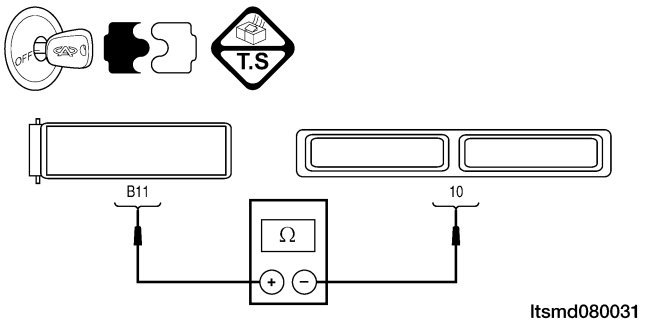

Is the check result normal?

Yes >> Go to the next step.

No >> Repair or replace the open circuit or short to ground or short to power supply in harness or connectors.

6. CHECK DTC

- With the X-431 scan tool, read TCM DTCs.
- Refer to ″DTC Confirmation Procedure″.

Is DTC P0753 still present?

Yes >> Replace the TCM.

No >> The system is now operating properly.
Reassemble the vehicle and road test to verify the customers complaint is repaired.

Downloaded from www.Manualslib.com manuals search engine

P0758 - Shift Solenoid Valve 2 (SSV2) Open Circuit Or Short To Power Supply Or Short To Ground

EVS

TM - DP0 - EVS - 01

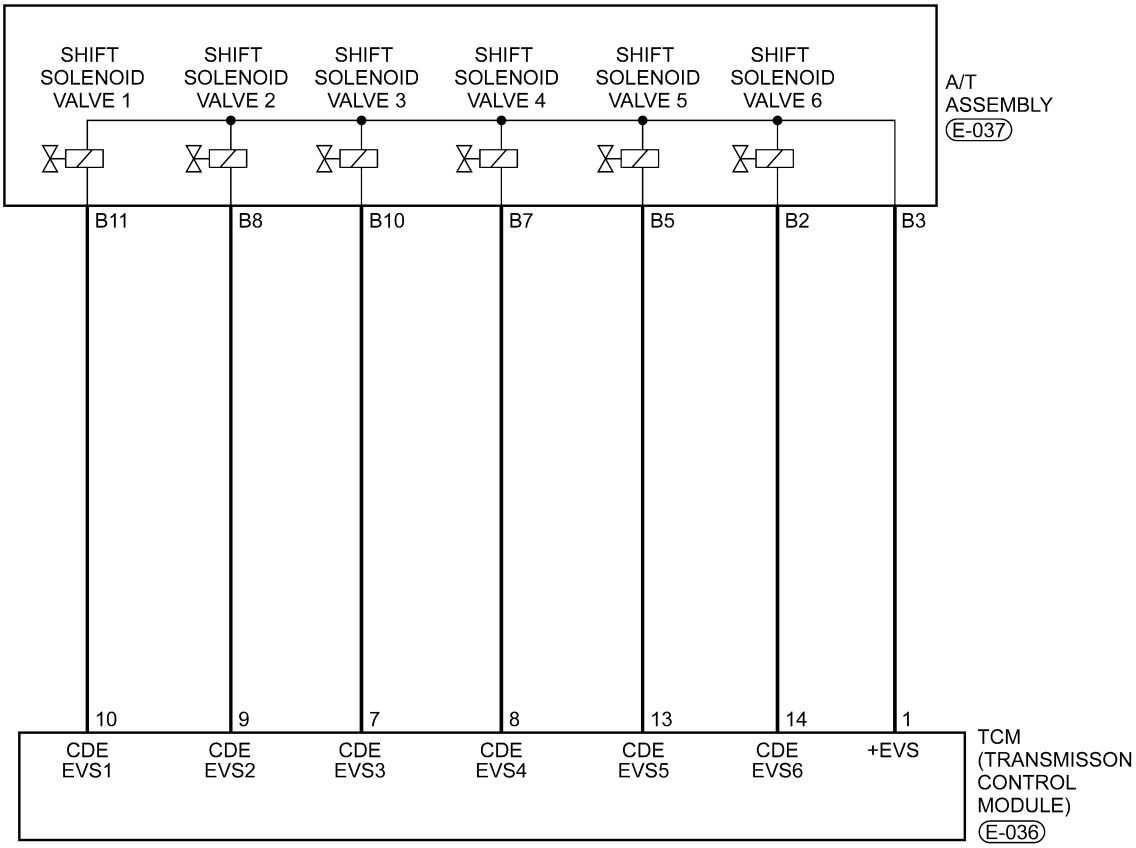

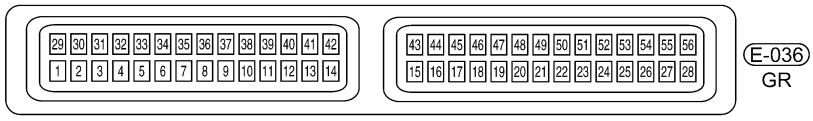

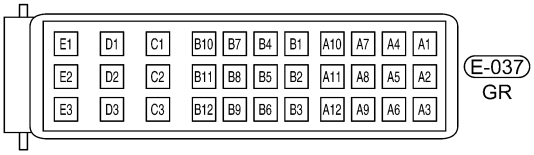

ltsmw080022t

Downloaded from www.Manualslib.com manuals search engine

On Board Diagnostic Logic

- Self-diagnosis detection logic.

DTC NO.	DTC DEFINITION	DTC DETECTION CONDITION	DTC SET CONDITION	POSSIBLE CAUSES
P0758	Shift Solenoid Valve 2 (SSV2) short to power supply	Vehicle is driving	The Transaxle Control Module (TCM) will set this DTC when the TCM detected an improper voltage drop when it tries to operate the solenoid valve.	• Shift Solenoid Valve 2 (SSV2) • Harness or connectors (The sensor circuit short to power supply) • Transaxle Control Module (TCM)
P0758	Shift Solenoid Valve 2 (SSV2) open or short to ground circuit	Vehicle is driving	The Transaxle Control Module (TCM) will set this DTC when the TCM detected an improper voltage drop when it tries to operate the solenoid valve.	• Shift Solenoid Valve 2 (SSV2) • Harness or connectors (The sensor circuit is open or shorted) • Transaxle Control Module (TCM)

DTC Confirmation Procedure:

Before performing the following procedure, confirm that battery voltage is more than 12 V.

- Turn ignition switch off.
- Connect the X-431 scan tool to the Data Link Connector (DLC) - use the most current software available.
- Turn ignition switch on.
- With the scan tool, record and erase stored DTCs in the TCM.
- Start engine and warm it to normal operating temperature.
- With the scan tool, select view DTC and data stream.
- If the DTC is detected, the DTC condition is current. Go to Diagnostic Procedure - Step 1.
- If the DTC is not detected, the DTC condition is intermittent (See Diagnostic Help and Intermittent DTC Troubleshooting in Section 08 Transaxle & Transfer Case for more information).

NOTE :

- If using the appropriate diagnostic test tool, you can diagnose the TCM harness while the TCM is still connected.
- Using the appropriate diagnostic test tool in this way will help prevent electrical connector terminal damage.

NOTE :

While performing electrical diagnosis & testing, always refer to the electrical schematics for specific circuit and component information.

Downloaded from www.Manualslib.com manuals search engine

Diagnostic Procedure

1. CHECK A/T SOLENOID SIGNAL

- With the scan tool, select view DTC and data stream for A/T.
- Start the engine.
- Monitor the value of the gear position as indicated in the following table while driving:

SELECT POSITION	RANGE	SHIFT SOLENOID VALVE 1	SHIFT SOLENOID VALVE 2	SHIFT SOLENOID VALVE 3	SHIFT SOLENOID VALVE 4
P	0	-	-	#	-
R	R	-	-	-	-
N	0	-	-	#	-
D	1	-	-	#	#
	2	-	#	-	#
	3	-	-	-	-
	4	#	#	-	-

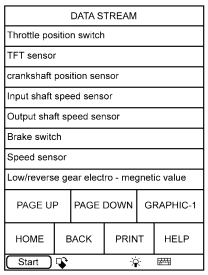

ltsmd080001t

Is the check result normal?

Yes >> The condition that caused this DTC is intermittent (See Diagnostic Help in Section 08 Transaxle & Transfer Case).

No >> Go to the next step.

2. ACTUATE TEST

- With X-431, perform the solenoid actuate test.
- The solenoid should be heard.

Is the check result normal?

Yes >> Go to step 6.

No >> Go to the next step.

Downloaded from www.Manualslib.com manuals search engine

3. CHECK SHIFT SOLENOID VALVE 2 (SSV2) RESISTANCE

- Check SSV2 resistance as follows:

NUMBER	SOLENOID
1	Shift Solenoid Valve 1
2	Shift Solenoid Valve 2
3	Shift Solenoid Valve 3
4	Shift Solenoid Valve 4
5	Shift Solenoid Valve 5
6	Shift Solenoid Valve 6
7	Pressure adjust solenoid valve
8	Torque converter lock solenoid valve
9	Manual valve
10	Valve body

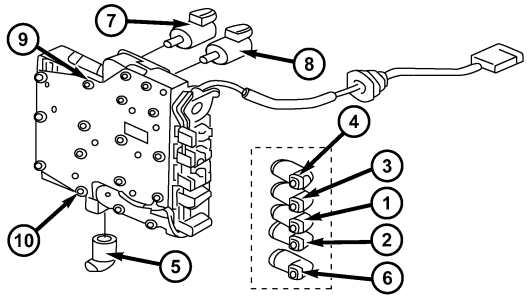

ltsmd080029

- Check SSV2 resistance as shown in the following table:

SHIFT SOLENOID VALVE	A/T ASSEMBLY TERMINAL
VALVE 1 (SSV1)	B11 - B3
VALVE 2 (SSV2)	B8 - B3
VALVE 3 (SSV3)	B10 - B3
VALVE 4 (SSV4)	B7 - B3
VALVE 5 (SSV5)	B5 - B3
VALVE 6 (SSV6)	B2 - B3
RESISTANCE (23°C)	38 - 42 (Ω)

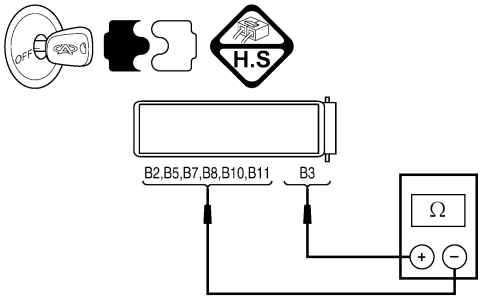

ltsmd080030

Is the check result normal?

Yes >> Replace the valve with a known good one.
With X-431, perform the solenoid actuate test.
– If the solenoid can be heard, go to step 6.
– If the solenoid can't be heard, go to the next step.

No >> Replace the damaged solenoid valve.

Downloaded from www.Manualslib.com manuals search engine

4. CHECK SHIFT SOLENOID VALVE 2 (SSV2) POWER SUPPLY

- Turn the ignition switch on.
- Check power supply between shift solenoid valve 2 (SSV2) E-037 terminal B8 and ground in the A/T assembly connector E-037.

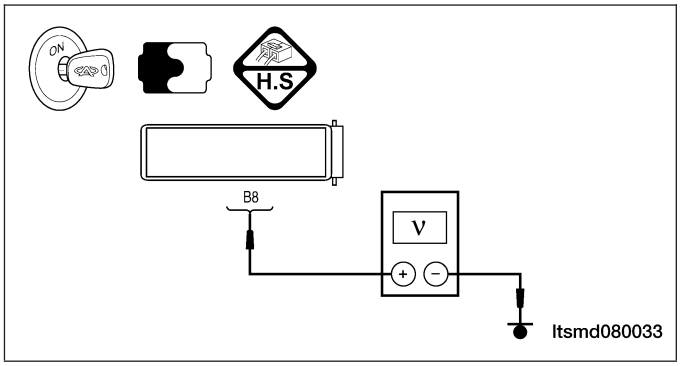

- Voltage should be more than 12 V.
- Or using the appropriate diagnostic test tool and a digital multimeter perform the following:
- Check the EVS2 solenoid supply voltage between TCM pin 1 and TCM pin 9 when activating the EVS2 solenoid and deactivating the EVS2 solenoid.
- Check the shift solenoid control signal. Check the voltage of the shift solenoid in each shift position.
- Check the voltage of the EVS2 solenoid supply circuit between the transaxle assembly electrical connector pin B3 and pin B8.

SEQUENCE SOLENOID (EVS) CONDITION						
LEVER POSITION	TCM TERMINAL					
	EVS1	EVS2	EVS3	EVS4	EVS5	EVS6
	1 - 10	1 - 9	1 - 7	1 - 8	1 - 13	1 - 14
R	0 V	0 V	0 V	0 V	0 V	0 V
N/P	0 V	0 V	+12 V	0 V	0 V	0 V
1	0 V	0 V	+12 V	+12 V	0 V	0 V
2	0 V	+12 V	0 V	+12 V	0 V	0 V
3	0 V	0 V	0 V	0 V	0 V	0 V
4	+12 V	+12 V	0 V	0 V	0 V	0 V

Is the check result normal?

Yes >> Go to the next step.

No >> Repair or replace open circuit or short to ground in harness or connectors.

Downloaded from www.Manualslib.com manuals search engine

5. CHECK SHIFT SOLENOID VALVE 2 (SSV2) CONTROL CIRCUIT

- Turn the ignition switch off.
- Disconnect TCM connector.
- Disconnect A/T assembly connector.
- Turn the ignition switch on.
- Check harness for short to power supply.

A/T ASSEMBLY CONNECTOR E-037 TERMINAL	GROUND	VOLTAGE
B8	Ground	Should not exist

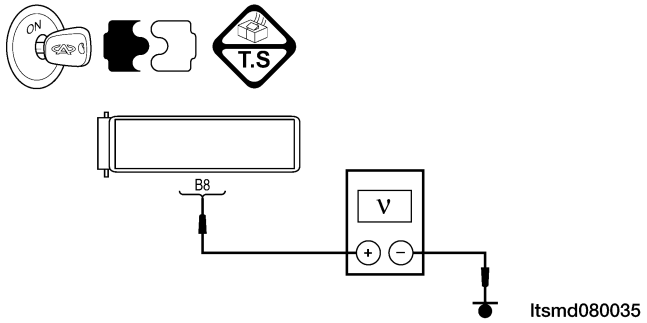

- Check the harness for an open or short to ground in harness or connectors.

A/T ASSEMBLY CONNECTOR E-037 TERMINAL	TCM CONNECTOR E-036 TERMINAL	CONTINUITY
B8	9	Yes

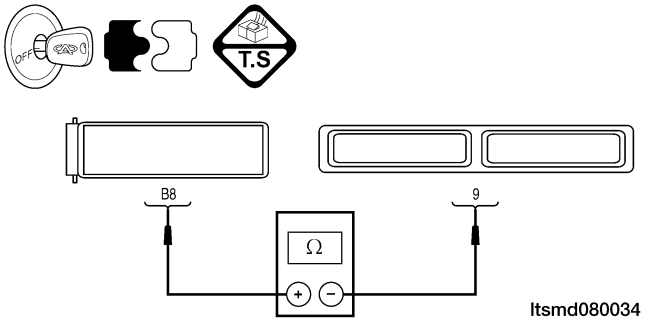

Is the check result normal?

Yes >> Go to the next step.

No >> Repair or replace the open circuit or short to ground or short to power supply in harness or connectors.

6. CHECK DTC

- With the X-431 scan tool, read TCM DTCs.
- Refer to ″DTC Confirmation Procedure″.

Is DTC P0758 present?

Yes >> Replace the TCM.

No >> The system is now operating properly.
Reassemble the vehicle and road test to verify the customers complaint is repaired.

Downloaded from www.Manualslib.com manuals search engine

P0763 - Shift Solenoid Valve 3 (SSV3) Short To Power Supply
P0763 - Shift Solenoid Valve 3 (SSV3) Open Or Short To Ground Circuit

TM - DP0 - EVS - 01

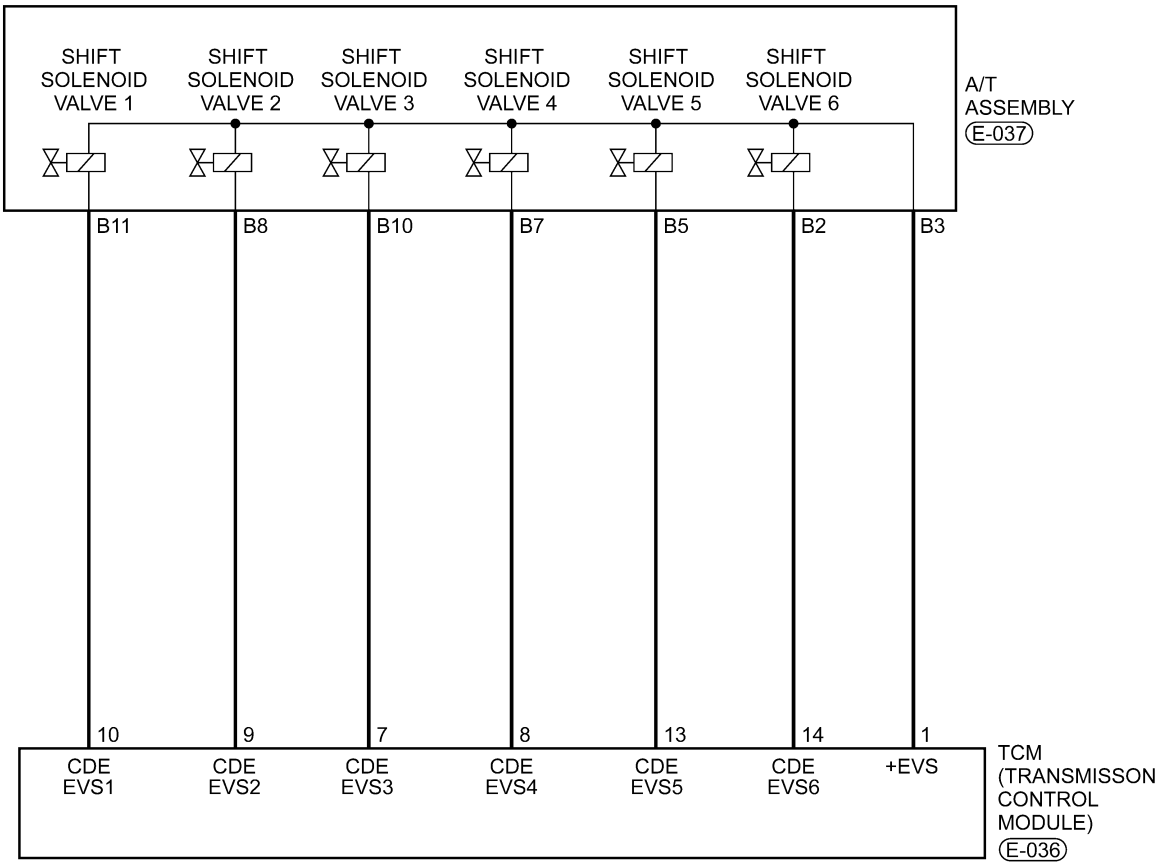

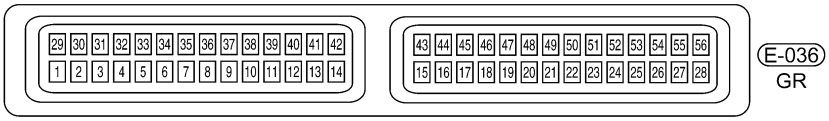

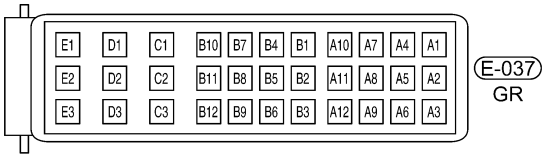

ltsmw080022t

Downloaded from www.Manualslib.com manuals search engine

On Board Diagnostic Logic

- Self-diagnosis detection logic.

DTC NO.	DTC DEFINITION	DTC DETECTION CONDITION	DTC SET CONDITION	POSSIBLE CAUSES
P0763	Shift Solenoid Valve 3 (SSV3) short to power supply	Vehicle is driving	The Transaxle Control Module (TCM) will set this DTC when the TCM detected an improper voltage drop when it tries to operate the solenoid valve.	• Shift Solenoid Valve 3 (SSV3) • Harness or connectors (The sensor circuit short to power supply) • Transaxle Control Module (TCM)
P0763	Shift Solenoid Valve 3 (SSV3) open or short to ground circuit	Vehicle is driving	The Transaxle Control Module (TCM) will set this DTC when the TCM detected an improper voltage drop when it tries to operate the solenoid valve.	• Shift Solenoid Valve 3 (SSV3) • Harness or connectors (The sensor circuit is open or shorted) • Transaxle Control Module (TCM)

DTC Confirmation Procedure:

Before performing the following procedure, confirm that battery voltage is more than 12 V.

- Turn ignition switch off.
- Connect the X-431 scan tool to the Data Link Connector (DLC) - use the most current software available.
- Turn ignition switch on.
- With the scan tool, record and erase stored DTCs in the TCM.
- Start engine and warm it to normal operating temperature.
- With the scan tool, select view DTC and data stream.
- If the DTC is detected, the DTC condition is current. Go to Diagnostic Procedure - Step 1.
- If the DTC is not detected, the DTC condition is intermittent (See Diagnostic Help and Intermittent DTC Troubleshooting in Section 08 Transaxle & Transfer Case for more information).

NOTE :

- If using the appropriate diagnostic test tool, you can diagnose the TCM harness while the TCM is still connected.
- Using the appropriate diagnostic test tool in this way will help prevent electrical connector terminal damage.

NOTE :

While performing electrical diagnosis & testing, always refer to the electrical schematics for specific circuit and component information.

Downloaded from www.Manualslib.com manuals search engine

Diagnostic Procedure

1. CHECK A/T SOLENOID SIGNAL

- With the scan tool, select view DTC and data stream for A/T.
- Start the engine.
- Monitor the value of the gear position as indicated in the following table while driving:

SEQUENCE SOLENOID (EVS) CONDITION						
LEVER POSITION	EVS					
	EVS1	EVS2	EVS3	EVS4	EVS5	EVS6
R	Not active	Not active	Not active	Not active	Not active	Not active
N/P	Not active	Not active	Active	Not active	Not active	Not active
1	Not active	Not active	Active	Active	Not active	Not active
2	Not active	Active	Not active	Active	Not active	Not active
3	Not active	Not active	Not active	Not active	Not active	Not active
4	Active	Active	Not active	Not active	Not active	Not active

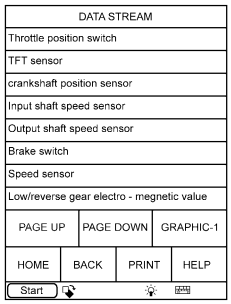

ltsmd080001t

Is the check result normal?

Yes >> The condition that caused this DTC is intermittent (See Diagnostic Help in Section 08 Transaxle & Transfer Case).

No >> Go to the next step.

2. ACTUATE TEST

- With X-431, perform the solenoid actuate test.
- The solenoid should be heard.

Is the check result normal?

Yes >> Go to step 6.

No >> Go to the next step.

Downloaded from www.Manualslib.com manuals search engine

3. CHECK SHIFT SOLENOID VALVE 3 (SSV3) RESISTANCE

- Check SSV3 resistance as follows:

NUMBER	SOLENOID
1	Shift Solenoid Valve 1
2	Shift Solenoid Valve 2
3	Shift Solenoid Valve 3
4	Shift Solenoid Valve 4
5	Shift Solenoid Valve 5
6	Shift Solenoid Valve 6
7	Pressure adjust solenoid valve
8	Torque converter lock solenoid valve
9	Manual valve
10	Valve body

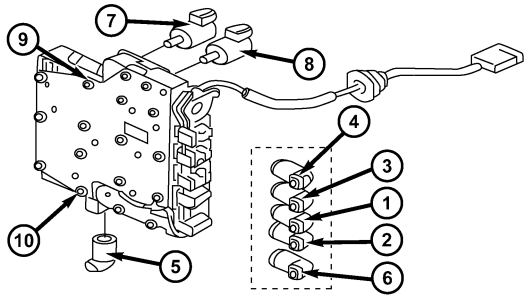

ltsmd080029

- Check SSV3 resistance as shown in the following table:

SHIFT SOLENOID VALVE	A/T ASSEMBLY TERMINAL
VALVE 1 (SSV1)	B11 - B3
VALVE 2 (SSV2)	B8 - B3
VALVE 3 (SSV3)	B10 - B3
VALVE 4 (SSV4)	B7 - B3
VALVE 5 (SSV5)	B5 - B3
VALVE 6 (SSV6)	B2 - B3
RESISTANCE (23°C)	38 - 42 (Ω)

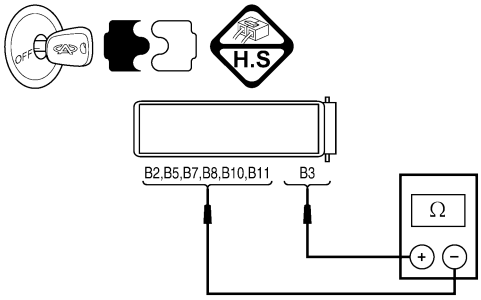

ltsmd080030

Is the check result normal?

Yes >> Replace the valve with a known good one.
With X-431, perform the solenoid actuate test.
– If the solenoid can be heard, go to step 6.
– If the solenoid can't be heard, go to the next step.

No >> Replace the damaged solenoid valve.

Downloaded from www.Manualslib.com manuals search engine

4. CHECK SHIFT SOLENOID VALVE 3 (SSV3) POWER SUPPLY

- Turn the ignition switch on.
- Check power supply between SSV3 E-037 terminal B10 and ground in the A/T assembly connector E-037.
- Battery voltage should exist.

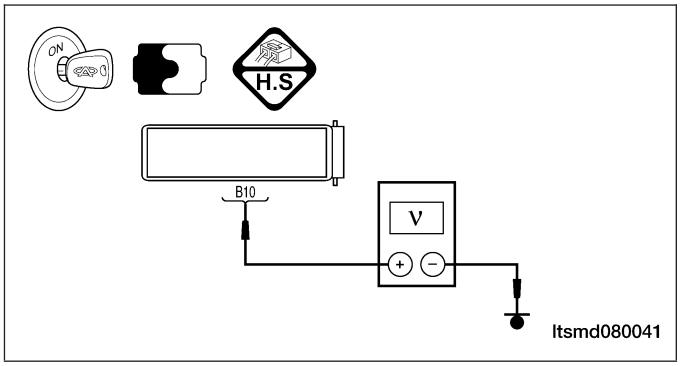

- Or using the appropriate diagnostic test tool and a digital multimeter perform the following:
- Check the EVS3 solenoid supply voltage between TCM pin 1 and TCM pin 7 when activating the EVS3 solenoid and deactivating the EVS3 solenoid.
- Check the shift solenoid control signal. Check the voltage of the shift solenoid in each shift position.
- Check the voltage of the EVS3 solenoid supply circuit between the transaxle assembly electrical connector pin B3 and pin B10.

SEQUENCE SOLENOID (EVS) CONDITION						
LEVER POSITION	TCM TERMINAL					
	EVS1	EVS2	EVS3	EVS4	EVS5	EVS6
	1 - 10	1 - 9	1 - 7	1 - 8	1 - 13	1 - 14
R	0 V	0 V	0 V	0 V	0 V	0 V
N/P	0 V	0 V	+12 V	0 V	0 V	0 V
1	0 V	0 V	+12 V	+12 V	0 V	0 V
2	0 V	+12 V	0 V	+12 V	0 V	0 V
3	0 V	0 V	0 V	0 V	0 V	0 V
4	+12 V	+12 V	0 V	0 V	0 V	0 V

Is the check result normal?

Yes >> Go to the next step.

No >> Repair or replace the open circuit or short to ground in harness or connectors.

Downloaded from www.Manualslib.com manuals search engine

5. CHECK SHIFT SOLENOID VALVE 3 (SSV3) CONTROL CIRCUIT

- Turn the ignition switch off.
- Disconnect TCM connector.
- Disconnect A/T assembly connector.
- Turn the ignition switch on.
- Check harness for short to power supply.

A/T ASSEMBLY CONNECTOR E-037 TERMINAL	GROUND	VOLTAGE
B10	Ground	Should not exist

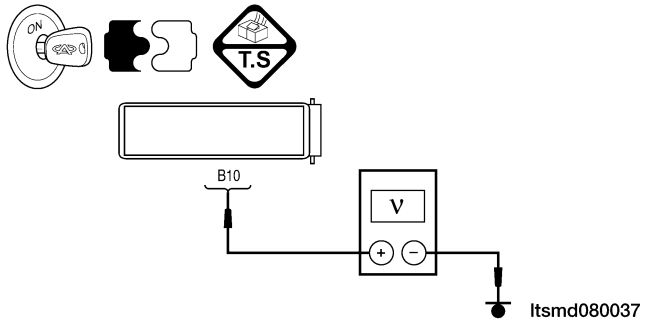

- Check the harness for an open or short to ground in harness or connectors.

A/T ASSEMBLY CONNECTOR E-037 TERMINAL	TCM CONNECTOR E-036 TERMINAL	CONTINUITY
B10	7	Yes

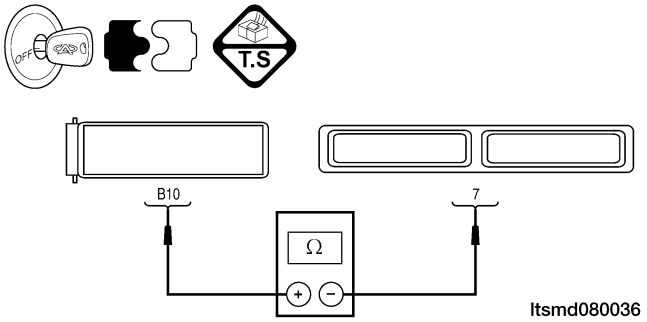

Is the check result normal?

Yes >> Go to the next step.

No >> Repair or replace the open circuit or short to power supply or short to ground in harness or connectors.

6. CHECK DTC

- With the X-431 scan tool, read TCM DTCs.
- Refer to ″DTC Confirmation Procedure″.

Is DTC P0763 present?

Yes >> Replace the TCM.

No >> The system is now operating properly.
Reassemble the vehicle and road test to verify the customers complaint is repaired.

Downloaded from www.Manualslib.com manuals search engine

P0768 - Shift Solenoid Valve 4 (SSV4) Short To Power Supply
P0768 - Shift Solenoid Valve 4 (SSV4) Open Or Short To Ground Circuit

TM - DP0 - EVS - 01

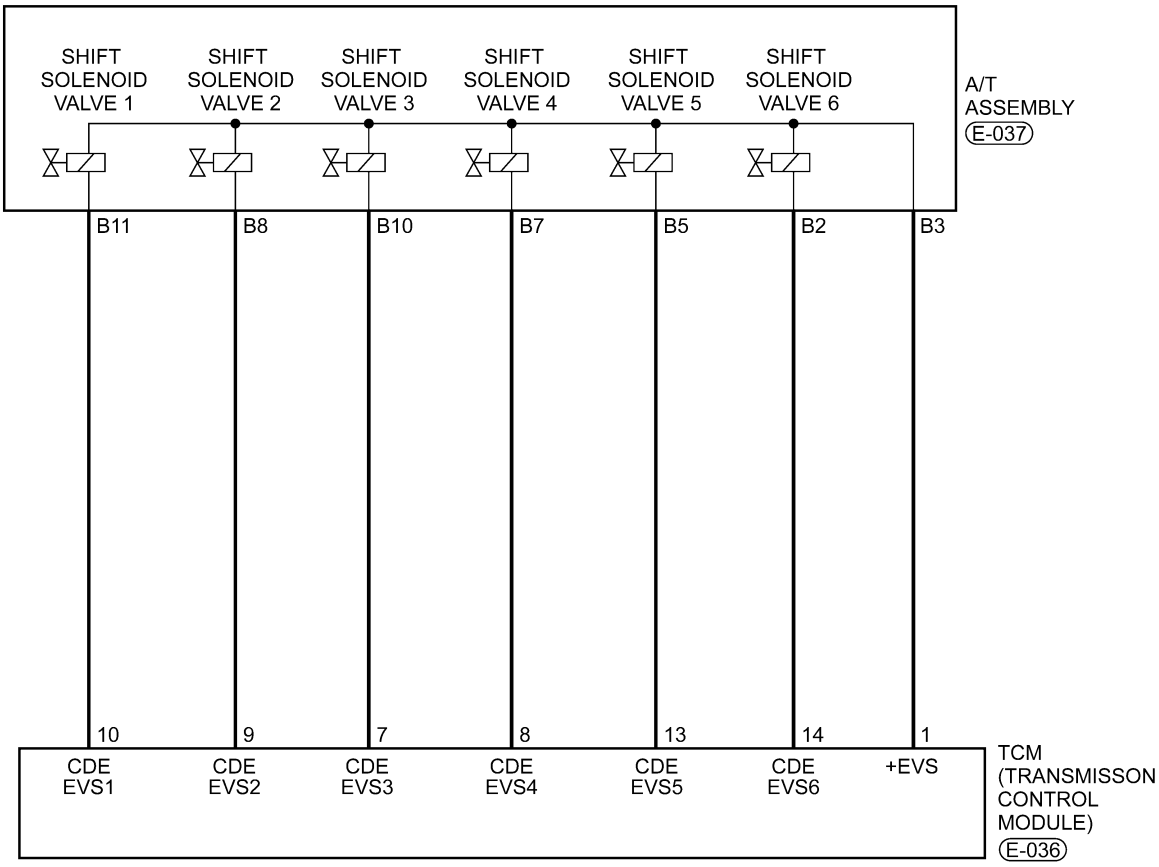

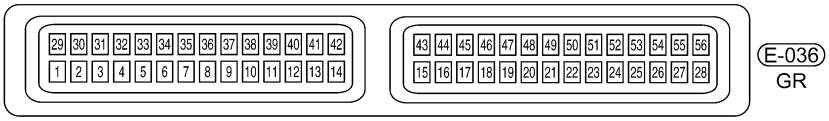

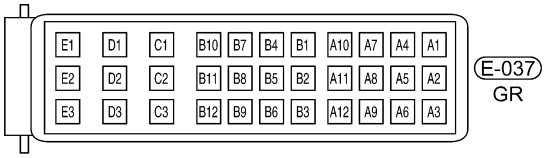

ltsmw080022t

Downloaded from www.Manualslib.com manuals search engine

On Board Diagnostic Logic

- Self-diagnosis detection logic.

DTC NO.	DTC DEFINITION	DTC DETECTION CONDITION	DTC SET CONDITION	POSSIBLE CAUSES
P0768	Shift Solenoid Valve 4 (SSV4) short to power supply	Vehicle is driving	The Transaxle Control Module (TCM) will set this DTC when the TCM detected an improper voltage drop when it tries to operate the solenoid valve.	• Shift Solenoid Valve 4 (SSV4) • Harness or connectors (The sensor circuit short to power supply) • Transaxle Control Module (TCM)
P0768	Shift Solenoid Valve 4 (SSV4) open or short to ground circuit	Vehicle is driving	The Transaxle Control Module (TCM) will set this DTC when the TCM detected an improper voltage drop when it tries to operate the solenoid valve.	• Shift Solenoid Valve 4 (SSV4) • Harness or connectors (The sensor circuit is open or shorted) • Transaxle Control Module (TCM)

DTC Confirmation Procedure:

Before performing the following procedure, confirm that battery voltage is more than 12 V.

- Turn ignition switch off.
- Connect the X-431 scan tool to the Data Link Connector (DLC) - use the most current software available.
- Turn ignition switch on.
- With the scan tool, record and erase stored DTCs in the TCM.
- Start engine and warm it to normal operating temperature.
- With the scan tool, select view DTC and data stream.
- If the DTC is detected, the DTC condition is current. Go to Diagnostic Procedure - Step 1.
- If the DTC is not detected, the DTC condition is intermittent (See Diagnostic Help and Intermittent DTC Troubleshooting in Section 08 Transaxle & Transfer Case for more information).
- If using the appropriate diagnostic test tool, you can diagnose the TCM harness while the TCM is still connected.
- Using the appropriate diagnostic test tool in this way will help prevent electrical connector terminal damage.

NOTE :

While performing electrical diagnosis & testing, always refer to the electrical schematics for specific circuit and component information.

Downloaded from www.Manualslib.com manuals search engine

Diagnostic Procedure

1. CHECK A/T SOLENOID SIGNAL

- With the scan tool, select view DTC and data stream for A/T.
- Start the engine.
- Monitor the value of the gear position as indicated in the following table while driving:

SEQUENCE SOLENOID (EVS) CONDITION						
LEVER POSITION	EVS					
	EVS1	EVS2	EVS3	EVS4	EVS5	EVS6
R	Not active	Not active	Not active	Not active	Not active	Not active
N/P	Not active	Not active	Active	Not active	Not active	Not active
1	Not active	Not active	Active	Active	Not active	Not active
2	Not active	Active	Not active	Active	Not active	Not active
3	Not active	Not active	Not active	Not active	Not active	Not active
4	Active	Active	Not active	Not active	Not active	Not active

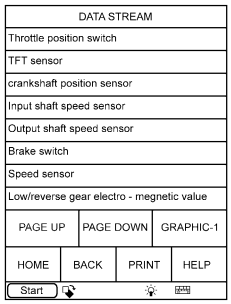

ltsmd080001t

Is the check result normal?

Yes >> The condition that caused this DTC is intermittent (See Diagnostic Help in Section 08 Transaxle & Transfer Case).

No >> Go to the next step.

2. ACTUATE TEST

- With X-431, perform the solenoid actuate test.
- The solenoid should be heard.

Is the check result normal?

Yes >> Go to step 6.

No >> Go to the next step.

Downloaded from www.Manualslib.com manuals search engine

3. CHECK SHIFT SOLENOID VALVE 4 (SSV4) RESISTANCE

- Check SSV4 resistance as follows:

NUMBER	SOLENOID
1	Shift Solenoid Valve 1
2	Shift Solenoid Valve 2
3	Shift Solenoid Valve 3
4	Shift Solenoid Valve 4
5	Shift Solenoid Valve 5
6	Shift Solenoid Valve 6
7	Pressure adjust solenoid valve
8	Torque converter lock solenoid valve
9	Manual valve
10	Valve body

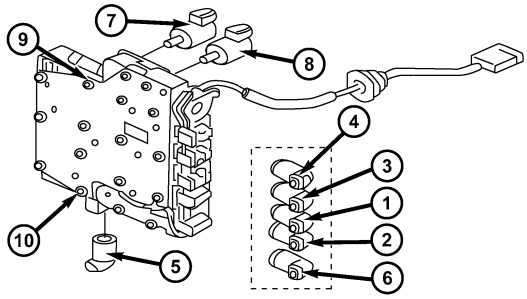

ltsmd080029

- Check SSV4 resistance as shown in the following table:

SHIFT SOLENOID VALVE	A/T ASSEMBLY TERMINAL
VALVE 1 (SSV1)	B11 - B3
VALVE 2 (SSV2)	B8 - B3
VALVE 3 (SSV3)	B10 - B3
VALVE 4 (SSV4)	B7 - B3
VALVE 5 (SSV5)	B5 - B3
VALVE 6 (SSV6)	B2 - B3
RESISTANCE (23°C)	38 - 42 (Ω)

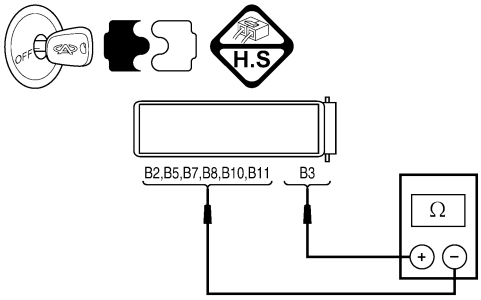

ltsmd080030

Is the check result normal?

Yes >> Replace the valve with a known good one.
With X-431, perform the solenoid actuate test.
– If the solenoid can be heard, go to step 6.
– If the solenoid can't be heard, go to the next step.

No >> Replace the damaged solenoid valve.

Downloaded from www.Manualslib.com manuals search engine

4. CHECK SHIFT SOLENOID VALVE 4 (SSV4) POWER SUPPLY

- Turn the ignition switch on.
- Check power supply between SSV4 E-037 terminal B7 and ground in the A/T assembly connector E-037.
- 12 V voltage should exist.

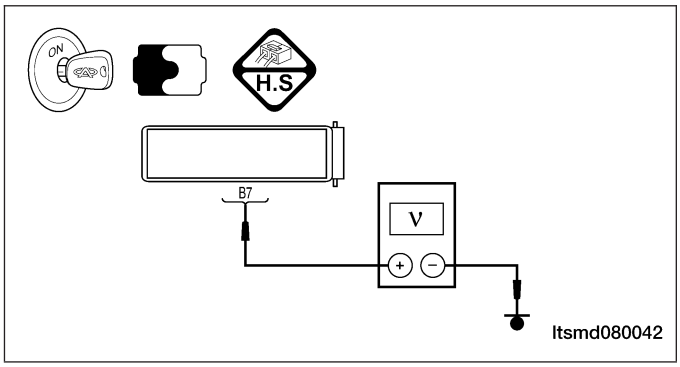

- Or using the appropriate diagnostic test tool and a digital multimeter perform the following:
- Check the EVS4 solenoid supply voltage between TCM pin 1 and TCM pin 8 when activating the EVS4 solenoid and deactivating the EVS4 solenoid.
- Check the shift solenoid control signal. Check the voltage of the shift solenoid in each shift position.
- Check the voltage of the EVS4 solenoid supply circuit between the transaxle assembly electrical connector pin B3 and pin B7.

SEQUENCE SOLENOID (EVS) CONDITION						
LEVER POSITION	TCM TERMINAL					
	EVS1	EVS2	EVS3	EVS4	EVS5	EVS6
	1 - 10	1 - 9	1 - 7	1 - 8	1 - 13	1 - 14
R	0 V	0 V	0 V	0 V	0 V	0 V
N/P	0 V	0 V	+12 V	0 V	0 V	0 V
1	0 V	0 V	+12 V	+12 V	0 V	0 V
2	0 V	+12 V	0 V	+12 V	0 V	0
3	0 V	0 V	0 V	0 V	0 V	0 V
4	+12 V	+12 V	0 V	0 V	0 V	0 V

Is the check result normal?

Yes >> Go to the next step.

No >> Repair or replace the open circuit or short to ground in harness or connectors.

Downloaded from www.Manualslib.com manuals search engine

5. CHECK SHIFT SOLENOID VALVE 4 (SSV4) CONTROL CIRCUIT

- Turn the ignition switch off.
- Disconnect TCM connector.
- Disconnect A/T assembly connector.
- Turn the ignition switch on.
- Check harness for short to power supply.

A/T Assembly connector E-037 terminal B7	**Ground**	**Voltage should not exist**	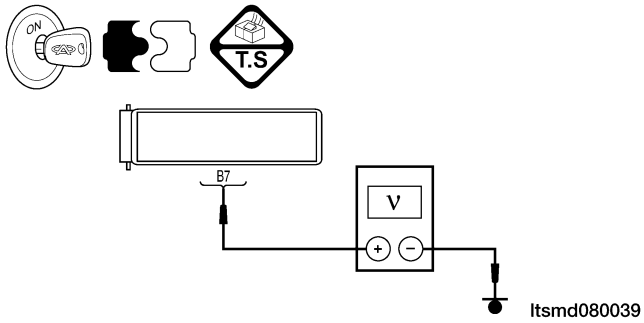

Is the check result normal?

Yes >> Go to the next step.

No >> Repair or replace the circuit short to power supply in harness or connectors.

6. CHECK SHIFT SOLENOID VALVE 4 (SSV4) CONTROL CIRCUIT

- Check for harness continuity between the following terminals:

A/T ASSEMBLY CONNECTOR E-037 TERMINAL	TCM CONNECTOR E-036 TERMINAL	CONTINUITY	
B7	8	Yes	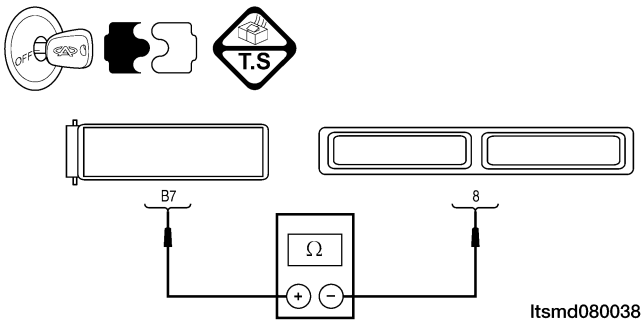

- Check the harness for short to ground.

Is the check result normal?

Yes >> Go to the next step.

No >> Repair or replace the open circuit or short to ground in harness or connectors.

Downloaded from www.Manualslib.com manuals search engine

7. CHECK DTC

- With the X-431 scan tool, read TCM DTCs.
- Refer to ″DTC Confirmation Procedure″.

Is DTC P0768 present?

Yes >> Replace the TCM.

No >> The system is now operating properly.
Reassemble the vehicle and road test to verify the customers complaint is repaired.

Downloaded from www.Manualslib.com manuals search engine

P0773 - Shift Solenoid Valve 5 (SSV5) Short To Power Supply
P0773 - Shift Solenoid Valve 5 (SSV5) Open Or Short To Ground Circuit

TM - DP0 - EVS - 01

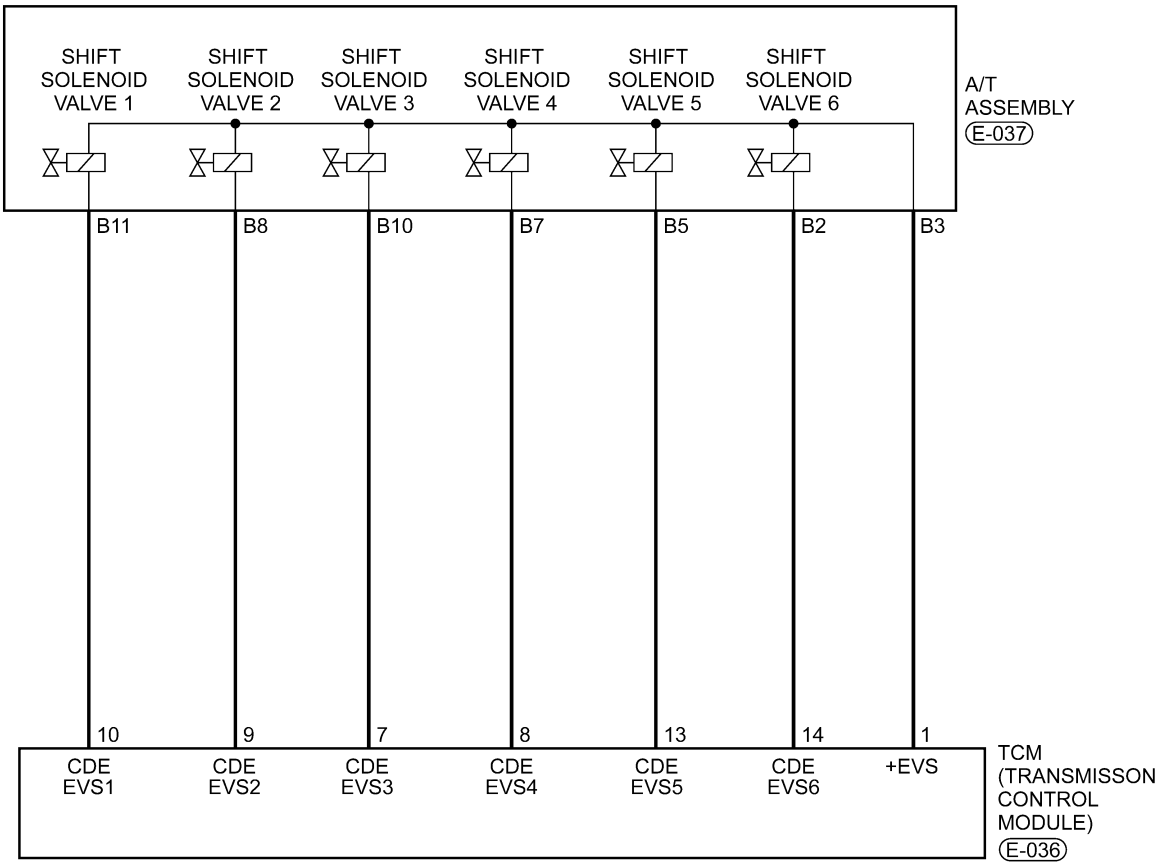

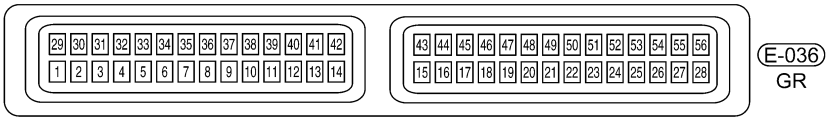

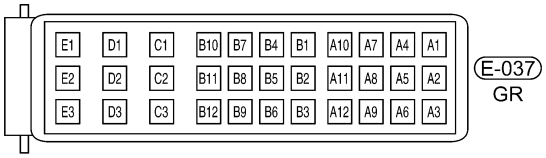

ltsmw080022t

Downloaded from www.Manualslib.com manuals search engine

On Board Diagnostic Logic

- Self-diagnosis detection logic.

DTC NO.	DTC DEFINITION	DTC DETECTION CONDITION	DTC SET CONDITION	POSSIBLE CAUSES
P0773	Shift Solenoid Valve 5 (SSV5) short to power supply	Vehicle is driving	The Transaxle Control Module (TCM) will set this DTC when the TCM detected an improper voltage drop when it tries to operate the solenoid valve.	• Solenoid (SSV5) • Harness or connectors (The sensor circuit short to power supply) • Transaxle Control Module (TCM)
P0773	Shift Solenoid Valve 5 (SSV5) open or short to ground circuit			• Solenoid (SSV5) • Harness or connectors (The sensor circuit is open or shorted) • Transaxle Control Module (TCM)

DTC Confirmation Procedure:

Before performing the following procedure, confirm that battery voltage is more than 12 V.

- Turn ignition switch off.
- Connect the X-431 scan tool to the Data Link Connector (DLC) - use the most current software available.
- Turn ignition switch on.
- With the scan tool, record and erase stored DTCs in the TCM.
- Start engine and warm it to normal operating temperature.
- With the scan tool, select view DTC and data stream.
- If the DTC is detected, the DTC condition is current. Go to Diagnostic Procedure - Step 1.
- If the DTC is not detected, the DTC condition is intermittent (See Diagnostic Help and Intermittent DTC Troubleshooting in Section 08 Transaxle & Transfer Case for more information).
- If using the appropriate diagnostic test tool, you can diagnose the TCM harness while the TCM is still connected.
- Using the appropriate diagnostic test tool in this way will help prevent electrical connector terminal damage.

NOTE :

While performing electrical diagnosis & testing, always refer to the electrical schematics for specific circuit and component information.

Downloaded from www.Manualslib.com manuals search engine

Diagnostic Procedure

1. CHECK A/T SOLENOID SIGNAL

- With the scan tool, select view DTC and data stream for A/T.
- Start the engine.
- Monitor the value of the gear position as indicated in the following table while driving:

SEQUENCE SOLENOID (EVS) CONDITION						
LEVER POSITION	EVS					
	EVS1	EVS2	EVS3	EVS4	EVS5	EVS6
R	Not active	Not active	Not active	Not active	Not active	Not active
N/P	Not active	Not active	Active	Not active	Not active	Not active
1	Not active	Not active	Active	Active	Not active	Not active
2	Not active	Active	Not active	Active	Not active	Not active
3	Not active	Not active	Not active	Not active	Not active	Not active
4	Active	Active	Not active	Not active	Not active	Not active

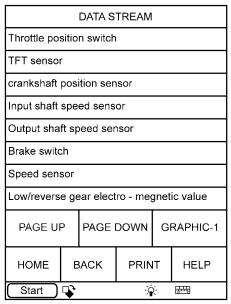

ltsmd080001t

08

Is the check result normal?

Yes >> The condition that caused this DTC is intermittent (See Diagnostic Help in Section 08 Transaxle & Transfer Case).

No >> Go to the next step.

2. ACTUATE TEST

- With X-431, perform the solenoid actuate test.
- The solenoid should be heard.

Is the check result normal?

Yes >> Go to step 6.

No >> Go to the next step.

Downloaded from www.Manualslib.com manuals search engine

3. CHECK SHIFT SOLENOID VALVE 5 (SSV5) RESISTANCE

- Check SSV5 resistance as follows:

NUMBER	SOLENOID
1	Shift Solenoid Valve 1
2	Shift Solenoid Valve 2
3	Shift Solenoid Valve 3
4	Shift Solenoid Valve 4
5	Shift Solenoid Valve 5
6	Shift Solenoid Valve 6
7	Pressure adjust solenoid valve
8	Torque converter lock solenoid valve
9	Manual valve
10	Valve body

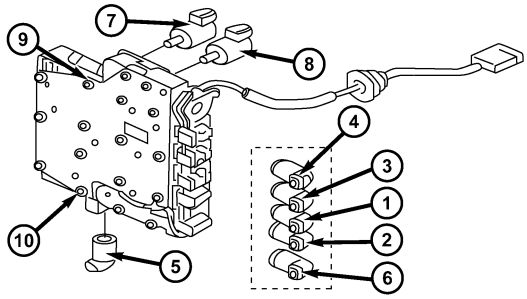

ltsmd080029

- Check SSV5 resistance as shown in the following table:

SHIFT SOLENOID VALVE	A/T ASSEMBLY TERMINAL
VALVE 1 (SSV1)	B11 - B3
VALVE 2 (SSV2)	B8 - B3
VALVE 3 (SSV3)	B10 - B3
VALVE 4 (SSV4)	B7 - B3
VALVE 5 (SSV5)	B5 - B3
VALVE 6 (SSV6)	B2 - B3
RESISTANCE (23°C)	38 - 42 (Ω)

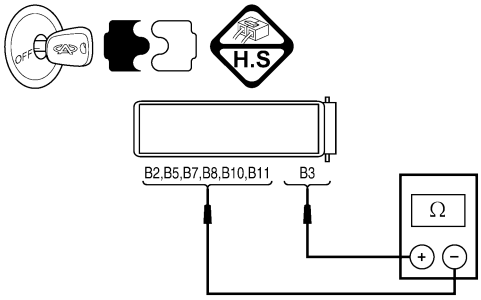

ltsmd080030

Is the check result normal?

Yes >> Replace the valve with a known good one.
With X-431, perform the solenoid actuate test.
– If the solenoid can be heard, go to step 6.
– If the solenoid can't be heard, go to the next step.

No >> Replace the damaged solenoid valve.

Downloaded from www.Manualslib.com manuals search engine

4. CHECK SHIFT SOLENOID VALVE 5 (SSV5) POWER SUPPLY

- Turn the ignition switch on.
- Check power supply between SSV5 E-037 terminal B5 and ground in the A/T assembly connector E-037.
- Battery voltage should exist.

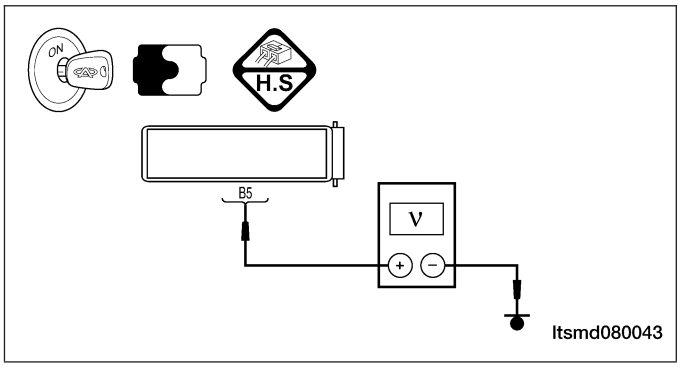

- Or using the appropriate diagnostic test tool and a digital multimeter perform the following:
- Check the EVS5 solenoid supply voltage between TCM pin 1 and TCM pin 13 when activating the EVS5 solenoid and deactivating the EVS5 solenoid.
- Check the shift solenoid control signal. Check the voltage of the shift solenoid in each shift position.
- Check the voltage of the EVS5 solenoid supply circuit between the transaxle assembly electrical connector pin B3 and pin B5.

SEQUENCE SOLENOID (EVS) CONDITION						
LEVER POSITION	TCM TERMINAL					
	EVS1	EVS2	EVS3	EVS4	EVS5	EVS6
	1 - 10	1 - 9	1 - 7	1 - 8	1 - 13	1 - 14
R	0 V	0 V	0 V	0 V	0 V	0 V
N/P	0 V	0 V	+12 V	0 V	0 V	0 V
1	0 V	0 V	+12 V	+12 V	0 V	0 V
2	0 V	+12 V	0 V	+12 V	0 V	0
3	0 V	0 V	0 V	0 V	0 V	0 V
4	+12 V	+12 V	0 V	0 V	0 V	0 V

Is the check result normal?

Yes >> Go to the next step.

No >> Repair or replace the open circuit or short to ground in harness or connectors.

Downloaded from www.Manualslib.com manuals search engine

5. CHECK SHIFT SOLENOID VALVE 5 (SSV5) CONTROL CIRCUIT

- Turn the ignition switch off.
- Disconnect TCM connector.
- Disconnect A/T assembly connector.
- Turn the ignition switch on.
- Check harness for short to power supply.

A/T assembly connector E-037 terminal B5	**Ground**	**Voltage should not exist**	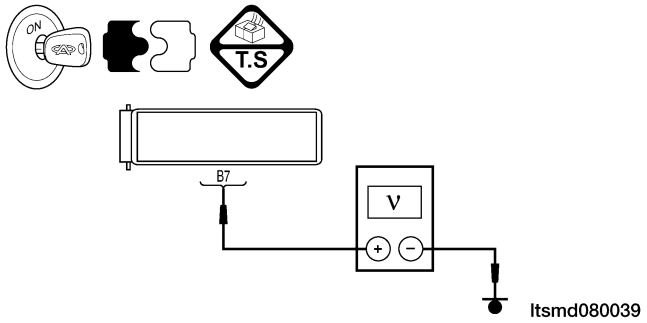

- Check the harness for an open or short to ground.

A/T ASSEMBLY CONNECTOR E-037 TERMINAL	TCM CONNECTOR E-036 TERMINAL	CONTINUITY	
B5	13	Yes	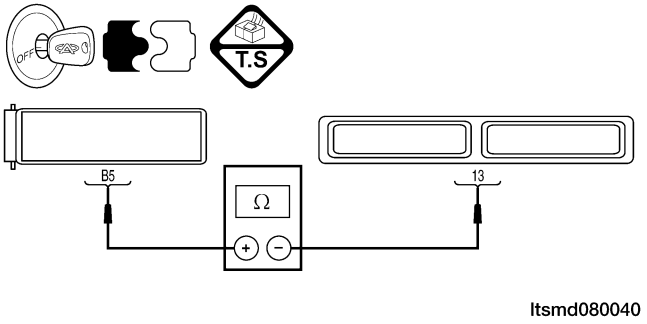

Is the check result normal?

Yes >> Go to the next step.

No >> Repair or replace the open circuit or short to power supply or short to ground in harness or connectors.

6. CHECK DTC

- With the X-431 scan tool, read TCM DTCs.
- Refer to "DTC Confirmation Procedure".

Is DTC P0773 still present?

Yes >> Replace the TCM.

No >> The system is now operating properly.
Reassemble the vehicle and road test to verify the customers complaint is repaired.

Downloaded from www.Manualslib.com manuals search engine

P0775 - EVM (Modulation Solenoid Valve) Open Circuit Or Short To Ground
P0775 - EVM (Modulation Solenoid Valve) Shorted To Voltage

TM - DP0 - EVM - 01

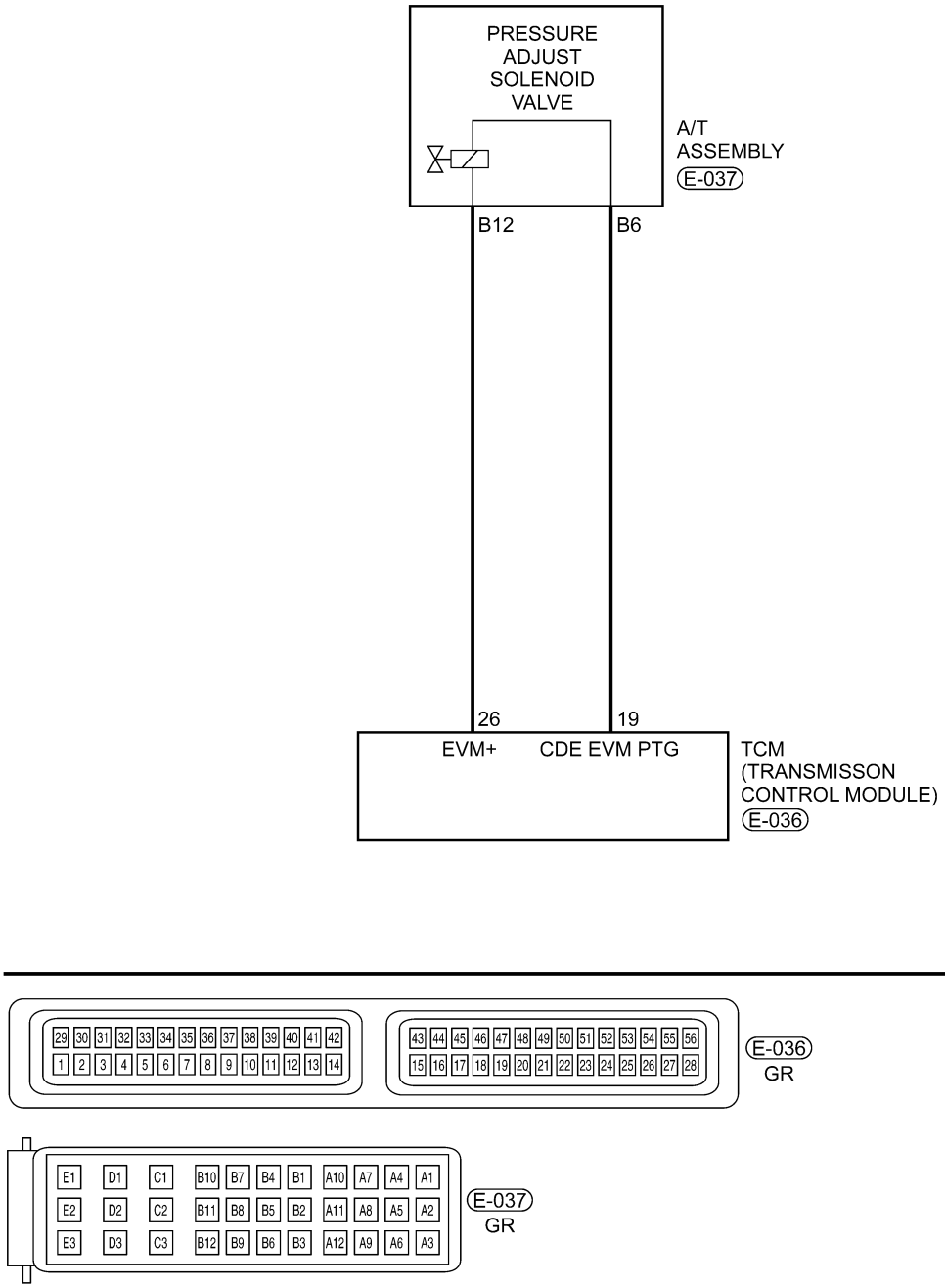

ltsmw080020t

Downloaded from www.Manualslib.com manuals search engine

On Board Diagnostic Logic

- Self-diagnosis detection logic.

DTC NO.	DTC DEFINITION	DTC DETECTION CONDITION	DTC SET CONDITION	POSSIBLE CAUSES
P0775	Modulation solenoid valve (EVM) short to power supply	Vehicle is driving	The EVM is modulated by controlling the duty cycle of the Solenoid. The DTC is set after the TCM detects that the duty cycle of the control current is out of the acceptable range for specified seconds.	• Modulation solenoid valve (EVM) • Harness or connectors (The sensor circuit is open or shorted) • Transaxle Control Module (TCM)
P0775	Modulation solenoid valve (EVM) open circuit or short to ground	Vehicle is driving	The EVM is modulated by controlling the duty cycle of the Solenoid. The DTC is set after the TCM detects that the duty cycle of the control current is out of the acceptable range for specified seconds.	• Modulation solenoid valve (EVM) • Harness or connectors (The sensor circuit is open or shorted) • Transaxle Control Module (TCM)

DTC Confirmation Procedure:

Before performing the following procedure, confirm that battery voltage is more than 12 V.

- Turn ignition switch off.
- Connect the X-431 scan tool to the Data Link Connector (DLC) - use the most current software available.
- Turn ignition switch on.
- With the scan tool, record and erase stored DTCs in the TCM.
- Start engine and warm it to normal operating temperature.
- With the scan tool, select view DTC and data stream.
- If the DTC is detected, the DTC condition is current. Go to Diagnostic Procedure - Step 1.
- If the DTC is not detected, the DTC condition is intermittent (See Diagnostic Help and Intermittent DTC Troubleshooting in Section 08 Transaxle & Transfer Case for more information).
- If using the appropriate diagnostic test tool, you can diagnose the TCM harness while the TCM is still connected.
- Using the appropriate diagnostic test tool in this way will help prevent electrical connector terminal damage.

NOTE :
While performing electrical diagnosis & testing, always refer to the electrical schematics for specific circuit and component information.

Downloaded from www.Manualslib.com manuals search engine

Diagnostic Procedure

1. CHECK A/T SOLENOID SIGNAL

- With the scan tool, select view DTC and data stream for A/T.
- Start the engine.
- Monitor the value of the gear position as indicated in the following table while driving:

SEQUENCE SOLENOID (EVS) CONDITION						
LEVER POSITION	EVS					
	EVS1	EVS2	EVS3	EVS4	EVS5	EVS6
R	Not active	Not active	Not active	Not active	Not active	Not active
N/P	Not active	Not active	Active	Not active	Not active	Not active
1	Not active	Not active	Active	Active	Not active	Not active
2	Not active	Active	Not active	Active	Not active	Not active
3	Not active	Not active	Not active	Not active	Not active	Not active
4	Active	Active	Not active	Not active	Not active	Not active

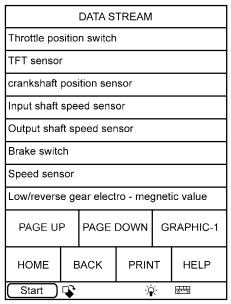

ltsmd080001t

Is the check result normal and DTC not present?

Yes >> The condition that caused this DTC is intermittent (See Diagnostic Help in Section 08 Transaxle & Transfer Case).

No >> Go to the next step.

2. ACTUATE TEST

- With X-431, perform the solenoid actuate test.
- The solenoid should be heard.

Is the check result normal?

Yes >> Go to step 7.

No >> Go to the next step.

Downloaded from www.Manualslib.com manuals search engine

3. CHECK EVM SOLENOID VALVE RESISTANCE

- Turn ignition switch off.
- Disconnect pressure adjust solenoid valve (7) connector.
- Check EVM solenoid valve resistance as shown in the following table:

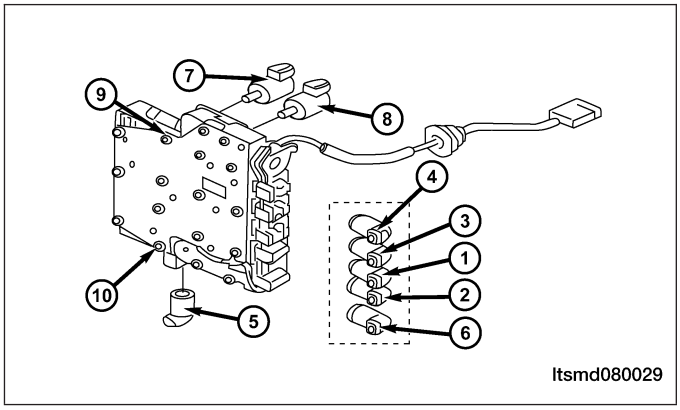

EVM SOLENOID (7) RESISTANCE BASED ON TRANSAXLE TEMPERATURE	
TEMPERATURE	**RESISTANCE**
23°C	36 - 44 Ω

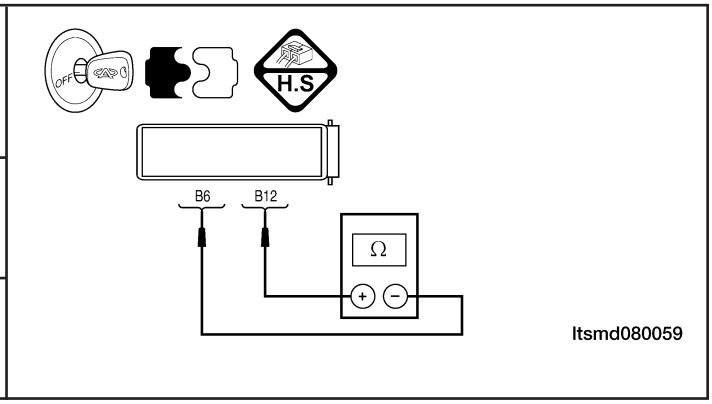

Is the check result normal?

Yes >> Replace the valve with a known good one.
With X-431, perform the solenoid actuate test.
– If the solenoid can be heard, Go to step 7.
– If the solenoid can't be heard, Go to the next step.

No >> Replace the damaged solenoid valve.

4. CHECK EVM SOLENOID VALVE POWER SUPPLY

- Turn ignition switch on.
- Check power supply between EVM control solenoid valve E-037 terminal B12 and ground in the A/T assembly connector E-037.
- 12 V should exist.

Is the check result normal?

Yes >> Go to the next step.

No >> Repair or replace the open circuit or short to ground in harness or connectors.

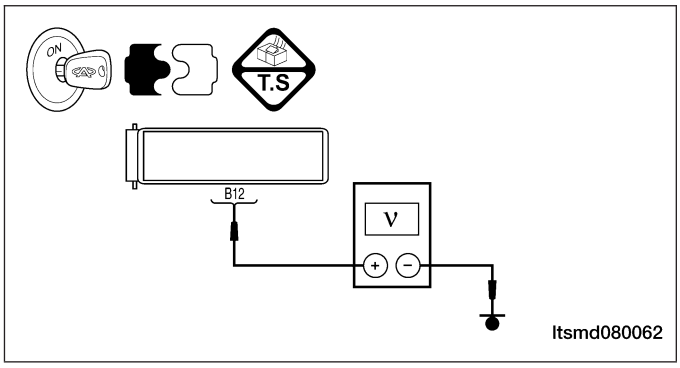

Downloaded from www.Manualslib.com manuals search engine

5. CHECK EVM SOLENOID VALVE CONTROL CIRCUIT

- Turn ignition switch off.
- Disconnect TCM connector.
- Turn ignition switch on.
- Check if voltage is present between E-037, terminal B8 and ground.
- Check the harness for short to power supply circuits.

Is the check results normal?

Yes >> Go to the next step.

No >> Repair or replace the open circuit or short to ground or short to power supply in harness or connectors.

6. CHECK EVM SIGNAL

- Connect TCM and EVM connector.
- With the engine running, move the shifter to ″N″ position, check the voltage of the EVM valve between the TCM pin 26 and pin 19.

Is the voltage approximately 2.5 V with the engine running and the transaxle in the "N" position?

Yes >> Go to the next step.

No >> Go to step 8.

7. CHECK FLUID PRESSURE

- Connect the ATF pressure gauge.
- Drive the vehicle and monitor the transaxle main ATF distributing passage pressure.

GROUND TIME (%)	MODULATION FLUID PRESSURE (×100000 PA)
0	0
10	0.32
12	0.48
15	0.67
20	0.88
30	1.17
40	1.41
50	1.69
60	1.97
70	2.26
80	2.60
88	2.87
90	2.91
92	2.95
95	3
100	3

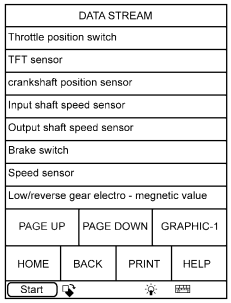

ltsmd080001t

Downloaded from www.Manualslib.com manuals search engine

- Verify if the EVM valve duty cycle and ATF pressure ratio matches.

Does the EVM valve duty cycle and ATF pressure ratio match?

Yes >> Go to the next step.

No >> Replace the EVM valve for a mechanical problem or repair the transaxle internal main ATF distributing passage pressure control device.

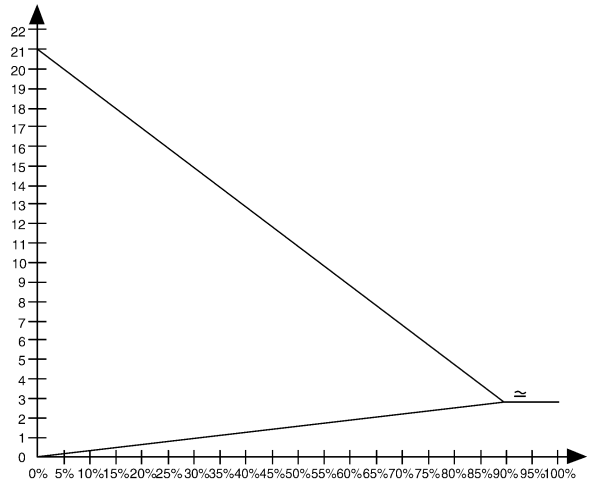

ltsmd080057

8. CHECK DTC

- With the X-431 scan tool, read TCM DTCs.
- Refer to ″DTC Confirmation Procedure″.

Is DTC P0775 present?

Yes >> Replace the TCM.

No >> The system is now operating properly.
Reassemble the vehicle and road test to verify the customers complaint is repaired.

Downloaded from www.Manualslib.com manuals search engine

P0795 - Torque Converter Lock Solenoid Valve (EVLU) Open Circuit Or Short To Ground
P0795 - Torque Converter Lock Solenoid Valve (EVLU) Short To Voltage

TM - DP0 - CDE - 01

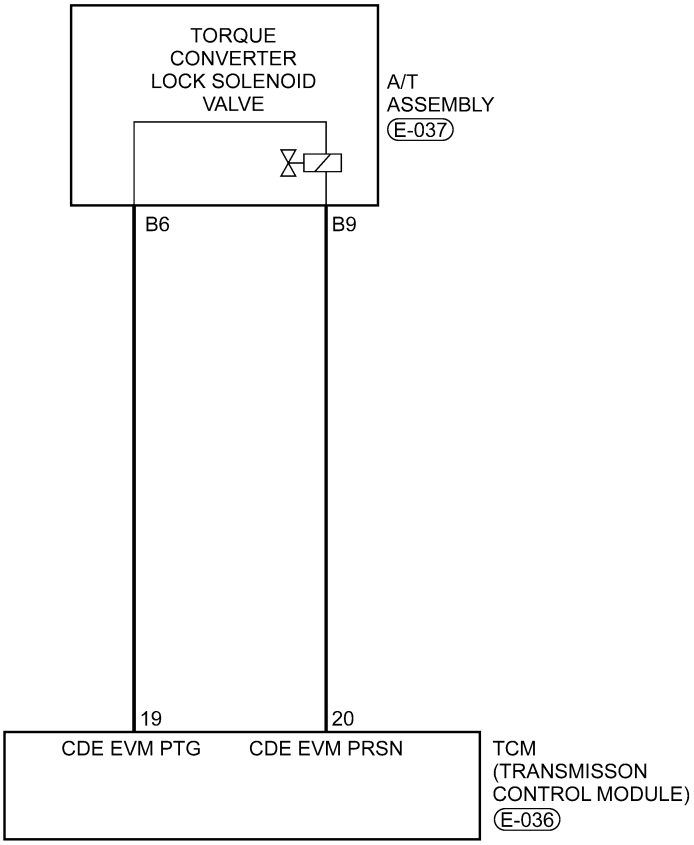

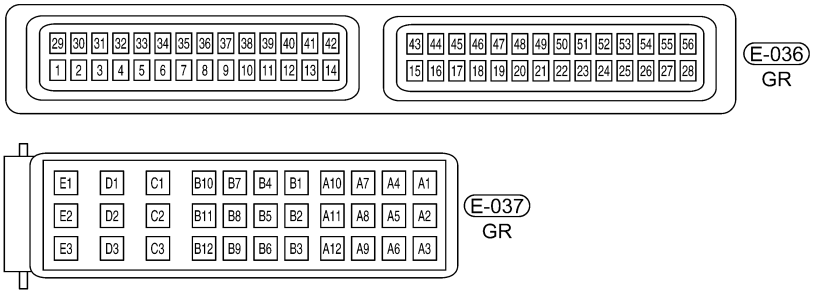

ltsmw080021t

Downloaded from www.Manualslib.com manuals search engine

On Board Diagnostic Logic

- Self-diagnosis detection logic.

DTC NO.	DTC DEFINITION	DTC DETECTION CONDITION	DTC SET CONDITION	POSSIBLE CAUSES
P0795	Torque converter lock solenoid valve (EVLU) open circuit or short to ground	Vehicle is driving	The Transaxle Control Module (TCM) detects that the torque converter lock solenoid valve (EVLU) circuit shorted to ground or open.	• Torque converter lock solenoid valve (EVLU) • Harness or connectors (The sensor circuit is open or shorted) • Transaxle Control Module (TCM)
P0795	Torque converter lock solenoid valve (EVLU) short to voltage	Vehicle is driving	The Transaxle Control Module (TCM) detects that the torque converter lock solenoid valve (EVLU) circuit is shorted to voltage.	• Torque converter lock solenoid valve (EVLU) • Harness or connectors (The sensor circuit is open or shorted) • Transaxle Control Module (TCM)

DTC Confirmation Procedure:

Before performing the following procedure, confirm that battery voltage is more than 12 V.

- Connect the X-431 scan tool to the diagnostic connector, press the POWER key to start the X-431.
- Start the engine and warm it to normal operating temperature.
- With the scan tool, select view DTC and data stream.
- If the DTC is detected, the DTC condition is current. Go to Diagnostic Procedure - Step 1.
- If the DTC is not detected, the DTC condition is intermittent (See Diagnostic Help and Intermittent DTC Troubleshooting in Section 08 Transaxle & Transfer Case for more information).
- If using the appropriate diagnostic test tool, you can diagnose the TCM harness while the TCM is still connected.
- Using the appropriate diagnostic test tool in this way will help prevent electrical connector terminal damage.

NOTE :

While performing electrical diagnosis & testing, always refer to the electrical schematics for specific circuit and component information.

Downloaded from www.Manualslib.com manuals search engine

Diagnostic Procedure

1. CHECK A/T SOLENOID SIGNAL

- With the scan tool, select view DTC and data stream for A/T.
- Start the engine.
- Monitor the value of the gear position as indicated in the following table while driving:

SEQUENCE SOLENOID (EVS) CONDITION						
LEVER POSITION	EVS					
	EVS1	EVS2	EVS3	EVS4	EVS5	EVS6
R	Not active	Not active	Not active	Not active	Not active	Not active
N/P	Not active	Not active	Active	Not active	Not active	Not active
1	Not active	Not active	Active	Active	Not active	Not active
2	Not active	Active	Not active	Active	Not active	Not active
3	Not active	Not active	Not active	Not active	Not active	Not active
4	Active	Active	Not active	Not active	Not active	Not active

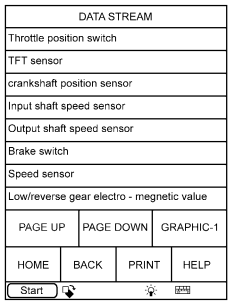

ltsmd080001t

08

Is the check result normal and DTC not present?

Yes >> The condition that caused this DTC is intermittent (See Diagnostic Help in Section 08 Transaxle & Transfer Case).

No >> Go to the next step.

2. ACTUATE TEST

- With X-431, perform the solenoid actuate test.
- The solenoid should be heard.

Is the check result normal?

Yes >> Go to step 7.

No >> Go to the next step.

Downloaded from www.Manualslib.com manuals search engine

3. CHECK TORQUE CONVERTER LOCK SOLENOID VALVE RESISTANCE

- Turn the ignition switch off.
- Disconnect torque converter lock solenoid valve 8 connector E-037.
- Check solenoid valve resistance as shown in the following table:

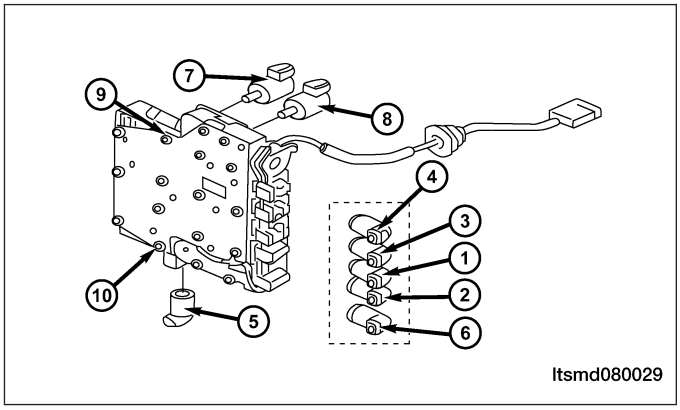

TORQUE CONVERTER LOCK SOLENOID (8) RESISTANCE BASED ON TRANSAXLE TEMPERATURE	
Temperature	Resistance
23°C	38 - 42 Ω

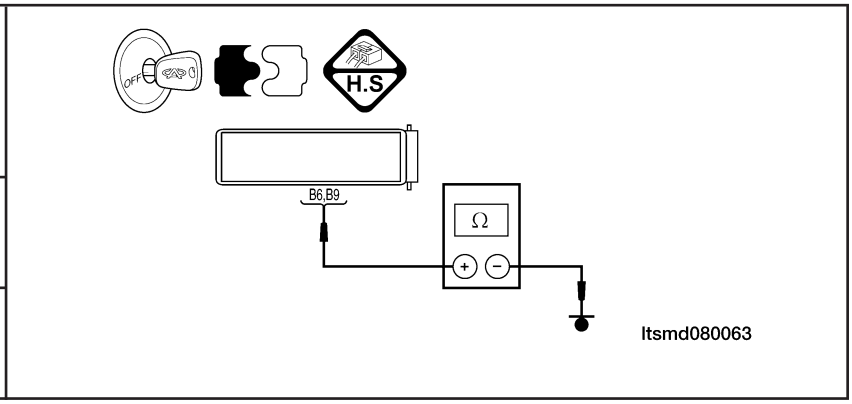

Is the check result normal?

Yes >> Replace the valve with a known good one.
With X-431, perform the solenoid actuate test.
– If the solenoid can be heard, go to step 7.
– If the solenoid can't be heard, go to the next step.

No >> Replace the damaged solenoid valve.

4. CHECK TORQUE CONVERTER LOCK SOLENOID VALVE POWER SUPPLY

- Turn the ignition switch on.
- Check power supply between torque converter lock solenoid valve E-037 terminal B6 and ground in the A/T assembly connector E-037.
- 12 V should exist.

Is the check result normal?

Yes >> Go to the next step.

No >> Repair or replace the open circuit or short to ground in harness or connectors.

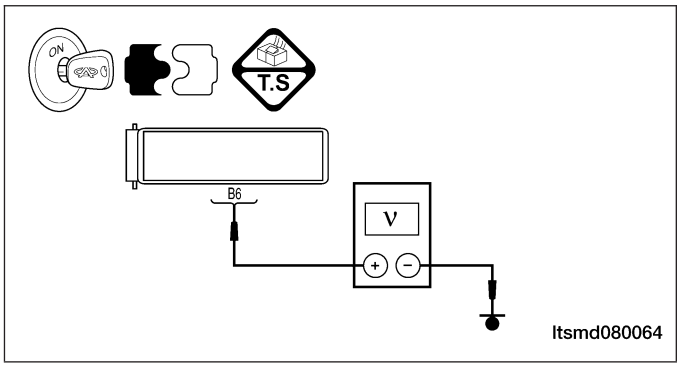

Downloaded from www.Manualslib.com manuals search engine

5. CHECK TORQUE CONVERTER LOCK SOLENOID VALVE CONTROL CIRCUIT

- Turn ignition switch off.
- Disconnect TCM connector.
- Check for harness continuity between the following terminals:

Check Resistance

TORQUE CONVERTER LOCK SOLENOID VALVE TERMINAL	TCM CONNECTOR E-036 TERMINAL	CONTINUITY
B9	20	Yes

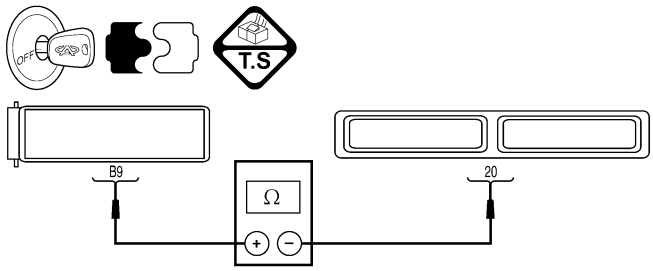

ltsmd080065

- Check the harness for short to ground.

Is the check result normal?

Yes >> Go to the next step.

No >> Repair or replace the open circuit or short to ground in harness or connectors.

6. CHECK TORQUE CONVERTER LOCK SOLENOID VALVE CONTROL CIRCUIT

- Turn the ignition switch on.
- Check if voltage is present between E-037, terminal B9 and ground.
- Check the harness for short to power supply circuits.

Is the check result normal?

Yes >> Go to the next step.

No >> Repair or replace the circuit for a short to power supply in harness or connectors.

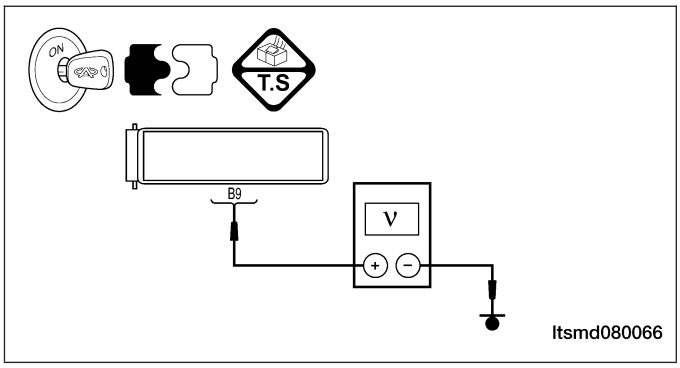

ltsmd080066

7. CHECK TORQUE CONVERTER LOCK SOLENOID VALVE SIGNAL

- Connect TCM and torque converter lock solenoid valve connector.
- With the engine running, move the shifter to ″N″ position, check the voltage of the solenoid valve between the TCM pin 19 and pin 20.

Is the voltage approximately 4.5 V with the engine running and the transaxle in the "N" position?

Yes >> Go to the next step.

No >> Go to step 9.

Downloaded from www.Manualslib.com manuals search engine

8. CHECK EVLU VALVE

- With the scan tool X-431, drive the vehicle, monitor the EVLU valve condition.
- Drive the vehicle until it is fully warmed up to at least 50°C. Perform the following step 3 times:
- Drive the vehicle at 80 km/h (50 mph) and allow 4th gear to engage for at least 10 seconds.
- Close the throttle, then tip back in until the throttle angle is between 20 and 30 degrees.

NOTE :
If you go over 30 degrees, you must release the throttle and retry.

Does the TCC engage during any of the attempts?

Yes >> The system is normal.
Reassemble the vehicle and road test to verify the customers complaint is repaired.

No >> Replace the torque converter lock solenoid valve for a mechanical problem.

9. CHECK DTC

- With the X-431 scan tool, read TCM DTCs.
- Refer to ″DTC Confirmation Procedure″.

Is DTC P0795 still present?

Yes >> Replace the TCM.

No >> The system is now operating properly.
Reassemble the vehicle and road test to verify the customers complaint is repaired.

Downloaded from www.Manualslib.com manuals search engine

P0840 - Pressure Sensor

TM - DP0 - OPS - 01

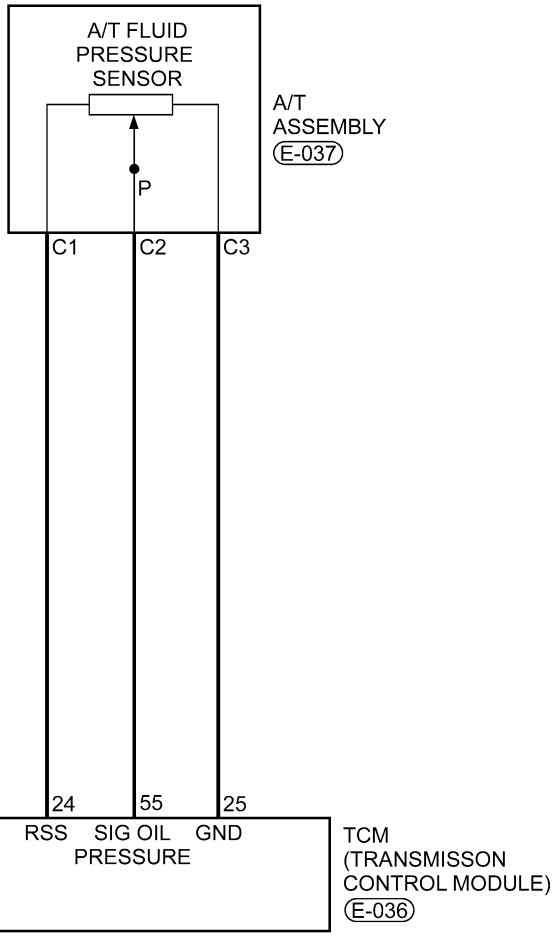

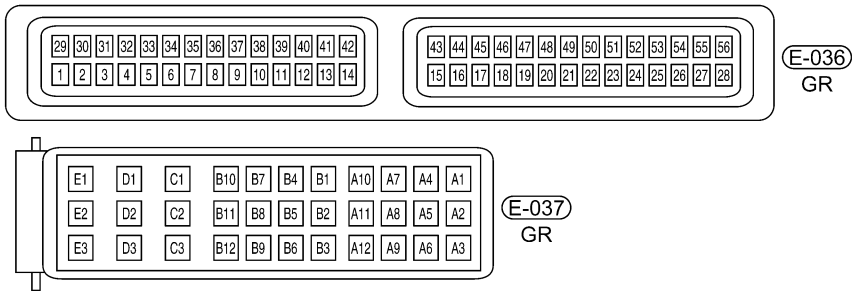

ltsmw080015t

Downloaded from www.Manualslib.com manuals search engine

On Board Diagnostic Logic

- Self-diagnosis detection logic.

DTC NO.	DTC DEFINITION	DTC DETECTION CONDITION	DTC SET CONDITION	POSSIBLE CAUSES
P0840	Pressure sensor	Vehicle is driving	The Transaxle Control Module (TCM) detects this DTC after the engine speed is up to 2000 RPM for 10 seconds and there is a fault with the pressure sensor circuit.	• A/T fluid pressure sensor • Harness or connectors (The sensor circuit is open or shorted) • Transaxle Control Module (TCM)

DTC Confirmation Procedure:

Before performing the following procedure, confirm that battery voltage is more than 12 V.

- Connect the X-431 scan tool to the Data Link Connector (DLC) - use the most current software available.
- Turn ignition switch on, with the scan tool, view and erase stored DTCs in the TCM.
- Start the engine and warm it to normal operating temperature.
- Drive the vehicle uphill to maintain the driving conditions required for this test.
- With the scan tool, select view DTC and data stream.
- If the DTC is detected, the DTC condition is current. Go to Diagnostic Procedure - Step 1.
- If the DTC is not detected, the DTC condition is intermittent (See Diagnostic Help and Intermittent DTC Troubleshooting in Section 08 Transaxle & Transfer Case for more information).

NOTE :
While performing electrical diagnosis & testing, always refer to the electrical schematics for specific circuit and component information.

Downloaded from www.Manualslib.com manuals search engine

Diagnostic Procedure

1. CHECK A/T FLUID PRESSURE SENSOR SIGNAL

- With the scan tool, select view DTC and data stream for A/T.
- Start vehicle and monitor the value of ″INPUT SPEED SENSOR″.

ITEM	CONDITION	DISPLAY VALUE
Fluid Pressure	Ignition switch on, not running	Below 0.2 bar
	• Engine: Idle • TFT: 31°C • ECT: 30°C	Approximately 0.05 bar

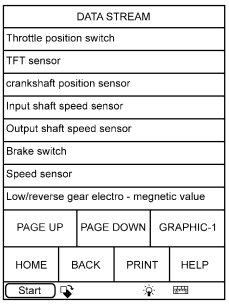

ltsmd080001t

Is the check result normal?

Yes >> The condition that caused this DTC is intermittent (See Diagnostic Help in Section 08 Transaxle & Transfer Case).

No >> Go to the next step.

2. CHECK FLUID PRESSURE SENSOR ELECTRICAL CONNECTOR

- Stop vehicle and turn ignition switch off.
- Disconnect fluid pressure sensor 2 connector.
- Inspect the electrical connector for damage.

Is the electrical connector OK?

Yes >> Go to the next step.

No >> Repair or replace the electrical connector as necessary.

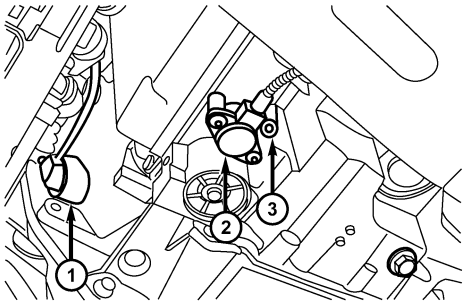

ltsmd080021

Downloaded from www.Manualslib.com manuals search engine

3. CHECK FLUID PRESSURE SENSOR POWER SUPPLY

- Stop vehicle and turn ignition switch off.
- Turn the ignition switch on.
- Check sensor power supply between sensor terminal C1 and ground in the sensor electrical connector E-037.
- 5 V should exist.

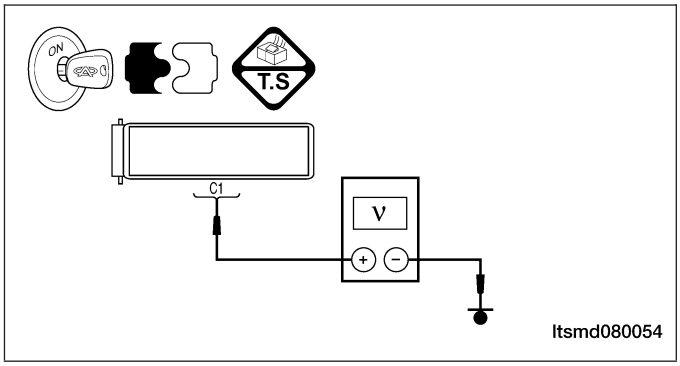

Is the check result normal?

Yes >> Go to the next step.

No >> Repair or replace the open circuit or short to ground or short to power in harness or connectors.
If circuit is normal, replace TCM.

4. CHECK FLUID PRESSURE SENSOR GROUND CIRCUIT

- Turn the ignition switch off.
- Disconnect TCM connector.
- Check for harness continuity between the following terminals:

A/T ASSEMBLY TERMINAL	TCM CONNECTOR TERMINAL	CONTINUITY
C3	25	Yes

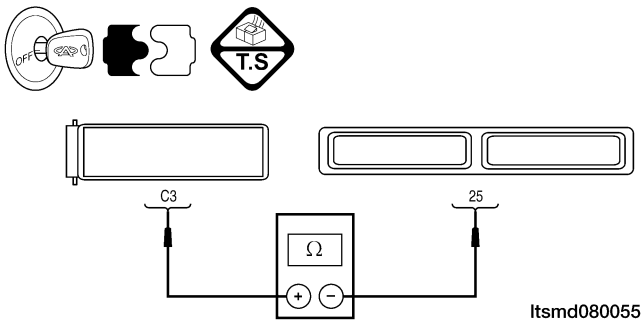

- Check the harness for short to power and short to ground.

Is the check result normal?

Yes >> Go to the next step.

No >> Repair or replace the open circuit or short to power or short to ground in harness connectors.

5. CHECK FLUID PRESSURE SENSOR SIGNAL

- Connect fluid pressure sensor connector.
- Connect TCM connector.
- Turn the ignition switch on.
- Check sensor signal voltage between sensor terminal 55 and 25 in the sensor electrical connector E-037.
- 1.4 V should exist.

Is the check result normal?

Yes >> Go to step 8.

No >> Go to the next step.

Downloaded from www.Manualslib.com manuals search engine

6. CHECK FLUID PRESSURE SENSOR SIGNAL CIRCUIT

- Turn the ignition switch off.
- Disconnect TCM and sensor connector.
- Check harness continuity between fluid pressure sensor terminal C2 and TCM terminal 55.
- Check short to ground and short to power supply.

Is the check result normal?

Yes >> Go to the next step.

No >> Check harness for an open or short to ground or short to power supply in harness or connectors.

7. CHECK THE FLUID PRESSURE SENSOR

- Check fluid pressure sensor resistance between sensor terminal C2 and C3 in A/T assembly connector E-037.
- Approximately 20 KΩ should exist.

Is the check result normal?

Yes >> Go to the next step.

No >> Replace the fluid pressure sensor.

8. CHECK DTC

- With the X-431 scan tool, read TCM DTCs.
- Refer to ″DTC Confirmation Procedure″.

Is DTC P0840 present?

Yes >> The system is now operating properly.
Reassemble the vehicle and road test to verify the customers complaint is repaired.

No >> Replace the TCM.

Downloaded from www.Manualslib.com manuals search engine

P1928 - Shift Lock Solenoid Valve Circuit Shorted To Voltage

TM - DP0 - SHIFT - 01

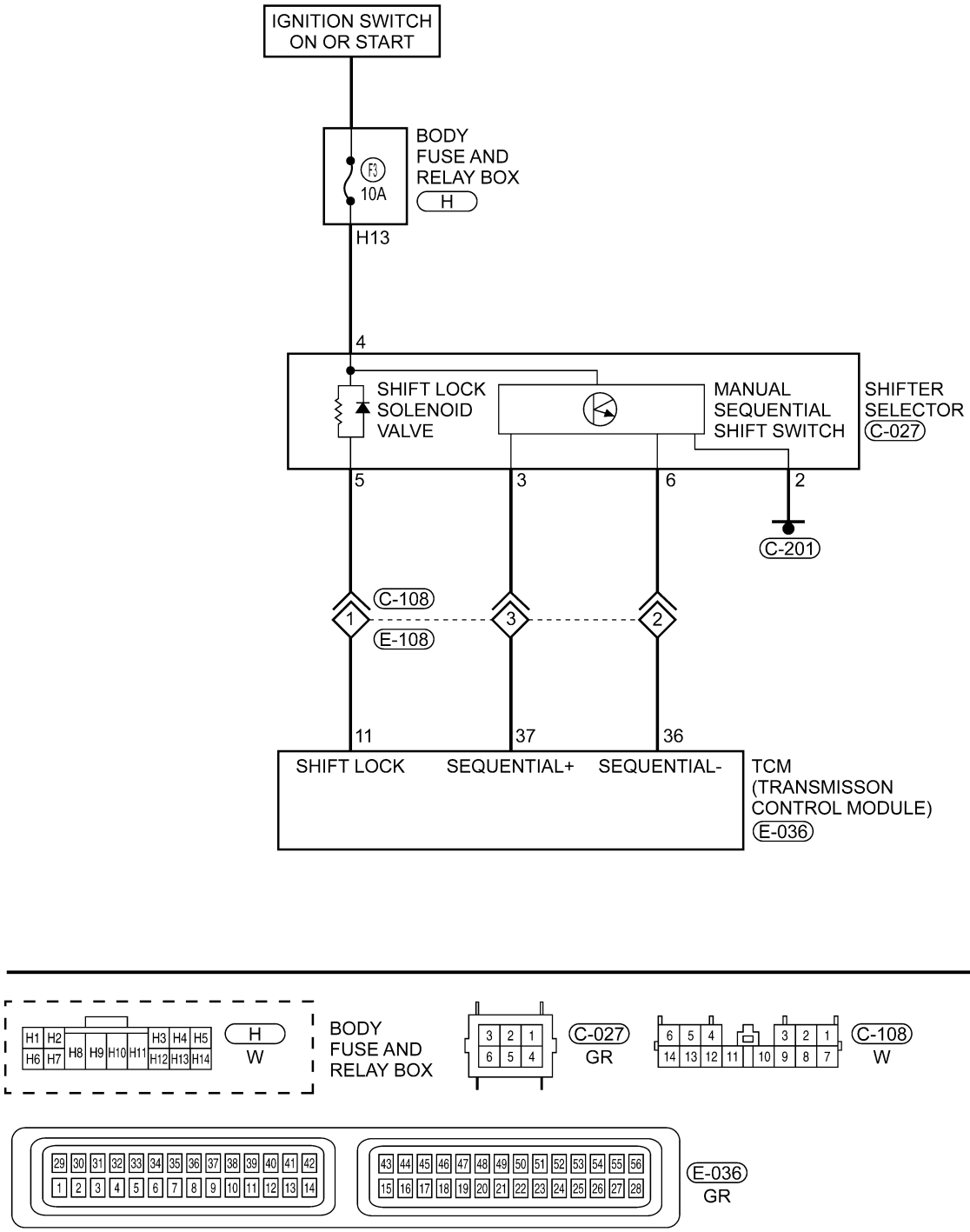

Downloaded from www.Manualslib.com manuals search engine

On Board Diagnostic Logic

- Self-diagnosis detection logic.

DTC NO.	DTC DEFINITION	DTC DETECTION CONDITION	DTC SET CONDITION	POSSIBLE CAUSES
P1928	Shift lock solenoid circuit short to power supply	Ignition on or vehicle is driving	The Transaxle Control Module (TCM) will set this DTC when the TCM detects that the shift lever lock solenoid circuit shorted to power supply.	• Shift lock solenoid valve • Harness or connectors (The sensor circuit is shorted) • Transaxle Control Module (TCM)

DTC Confirmation Procedure:

Before performing the following procedure, confirm that battery voltage is more than 12 V.

- Connect the X-431 scan tool to the Data Link Connector (DLC) - use the most current software available.
- Turn ignition switch on, with the scan tool, view and erase stored DTCs in the TCM.
- Start the engine and warm it to normal operating temperature.
- Try to operate the shifter selector.
- With the scan tool, select view DTC and data stream.
- If the DTC is detected, the DTC condition is current. Go to Diagnostic Procedure - Step 1.
- If the DTC is not detected, the DTC condition is intermittent (See Diagnostic Help and Intermittent DTC Troubleshooting in Section 08 Transaxle & Transfer Case for more information).
- If using the appropriate diagnostic test tool, you can diagnose the TCM harness while the TCM is still connected.
- Using the appropriate diagnostic test tool in this way will help prevent electrical connector terminal damage.

NOTE :
While performing electrical diagnosis & testing, always refer to the electrical schematics for specific circuit and component information.

Diagnostic Procedure

1. CHECK SHIFT LOCK SOLENOID VALVE SIGNAL

- With the scan tool, select view DTC and data stream.
- Start the engine.
- Monitor the value of the gear position as indicated in the following table while driving:

SELECT POSITION	RANGE	SHIFT SOLENOID VALVE 1	SHIFT SOLENOID VALVE 2	SHIFT SOLENOID VALVE 3	SHIFT SOLENOID VALVE 4
P	0	-	-	#	-
R	R	-	-	-	-
N	0	-	-	#	-
D	1	-	-	#	#
	2	-	#	-	#
	3	-	-	-	-
	4	#	#	-	-

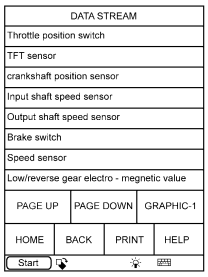

ltsmd080001t

Downloaded from www.Manualslib.com manuals search engine

- #: Operating solenoid

Is the check result normal and DTC not present?

Yes >> The condition that caused this DTC is intermittent (See Diagnostic Help in Section 08 Transaxle & Transfer Case).

No >> Go to the next step.

2. ACTUATE TEST

- With X-431, perform the solenoid actuate test.
- Watch, listen and monitor the shift lock solenoid condition and verify the shift lock solenoid works correctly and the solenoid should be heard when actuate shift lock solenoid valve.

Is the check result normal?

Yes >> Go to step 7.

No >> Go to the next step.

3. CHECK SHIFT LOCK SOLENOID VALVE RESISTANCE

- Turn the ignition switch off.
- Disconnect shift lock solenoid valve connector C-027.
- Check shift lock solenoid valve resistance as shown in the following table:

SHIFT LOCK SOLENOID VALVE RESISTANCE BASED ON TRANSAXLE TEMPERATURE	
Temperature	**Resistance**
23°C	36 - 44 Ω

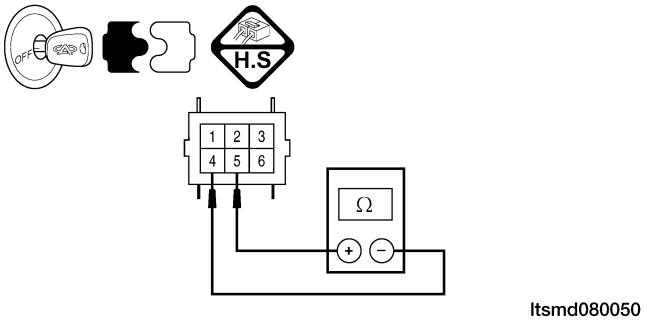

Is the check result normal?

Yes >> Replace the shift lock solenoid valve with a known good one.
With X-431, perform the solenoid actuate test.
– If the solenoid can be heard, go to step 7.
– If the solenoid can't be heard, go to the next step.

No >> Replace the shift lock solenoid for a mechanical problem.

Downloaded from www.Manualslib.com manuals search engine

4. CHECK SHIFT LOCK SOLENOID VALVE POWER SUPPLY

- Turn ignition switch on.
- Check the shift lock solenoid valve power supply.
- Battery voltage should exist.

Is the check result normal?

Yes >> Go to the next step.

No >> Repair or replace open circuit or short to ground in harness or connectors.

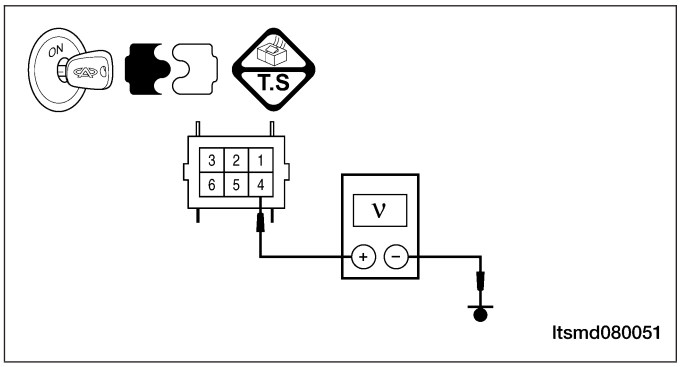

5. CHECK SHIFT LOCK SOLENOID VALVE CONTROL CIRCUIT

- Turn the ignition switch on.
- Check the shift lock solenoid control signal voltage of the shift lock solenoid when pressing the brake pedal.
- Check power supply between shift lock solenoid valve terminal 4 and 5 in the shifter selector connector C-027.

SHIFT SOLENOID CONDITION	
Condition	**Shift Lock Solenoid**
Terminal	Pins 4 - 5
Brake Pedal ON	0 (V)
Brake Pedal OFF	12 (V)

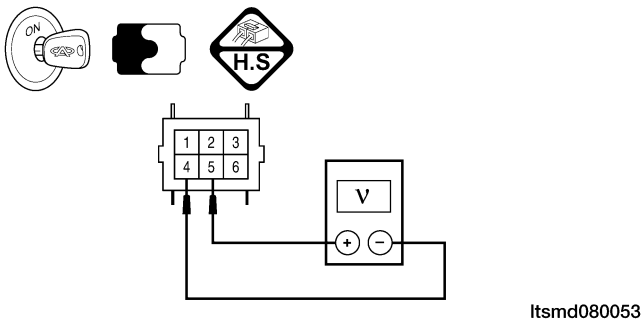

Does the voltage change as the brake pedal is ON and OFF?

Yes >> Go to step 7.

No >> Go to the next step.

Downloaded from www.Manualslib.com manuals search engine

6. CHECK SHIFT LOCK SOLENOID VALVE CONTROL CIRCUIT

- Turn the ignition switch off.
- Disconnect TCM connector.
- Check for harness continuity between the following terminals:

SHIFT LOCK SOLENOID VALVE CONNECTOR TERMINAL	TCM CONNECTOR E-036 TERMINAL	CONTINUITY
5	11	Yes

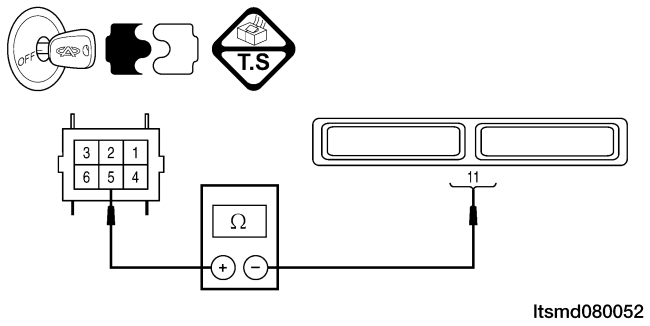

- Check the harness for short to power supply.

Is the check result normal?

Yes >> Go to the next step.

No >> Repair or replace the circuit for short to power supply in harness or connectors.

7. CHECK DTC

- With the X-431 scan tool, read TCM DTCs.
- Refer to "DTC Confirmation Procedure".

Is DTC P1928 present?

Yes >> Replace the TCM.

No >> The system is now operating properly.
Reassemble the vehicle and road test to verify the customers complaint is repaired.

Downloaded from www.Manualslib.com manuals search engine

P1928 - Shift Lock Solenoid Valve Open Circuit Or Short To Ground

TM - DP0 - SHIFT - 01

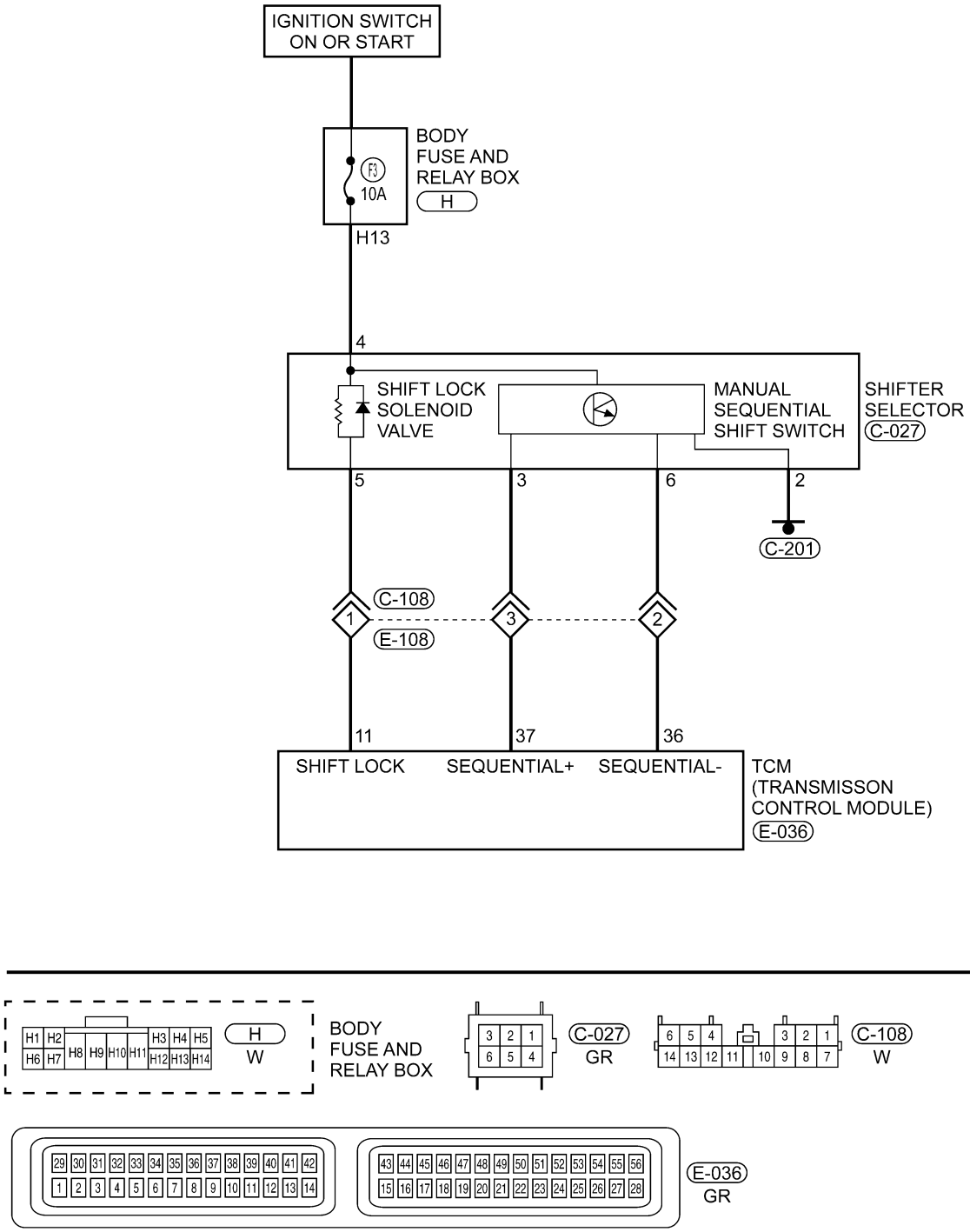

ltsmw080013t

Downloaded from www.Manualslib.com manuals search engine

On Board Diagnostic Logic

- Self-diagnosis detection logic.

DTC NO.	DTC DEFINITION	DTC DETECTION CONDITION	DTC SET CONDITION	POSSIBLE CAUSES
P1928	Shift lock solenoid valve open circuit or short to ground	Ignition switch on or vehicle is driving	The Transaxle Control Module (TCM) will set this DTC when the TCM detects that the shift lever lock solenoid circuit shorted to ground or open.	• Shift lock solenoid valve • Harness or connectors (The sensor circuit is open or shorted) • Transaxle Control Module (TCM)

DTC Confirmation Procedure:

Before performing the following procedure, confirm that battery voltage is more than 12 V.

- Connect the X-431 scan tool to the Data Link Connector (DLC) - use the most current software available.
- Turn ignition switch on, with the scan tool, view and erase stored DTCs in the TCM.
- Start the engine and warm it to normal operating temperature.
- Try to operate the shifter selector.
- With the scan tool, select view DTC and data stream.
- If the DTC is detected, the DTC condition is current. Go to Diagnostic Procedure - Step 1.
- If the DTC is not detected, the DTC condition is intermittent (See Diagnostic Help and Intermittent DTC Troubleshooting in Section 08 Transaxle & Transfer Case for more information).
- If using the appropriate diagnostic test tool, you can diagnose the TCM harness while the TCM is still connected.
- Using the appropriate diagnostic test tool in this way will help prevent electrical connector terminal damage.

NOTE :
While performing electrical diagnosis & testing, always refer to the electrical schematics for specific circuit and component information.

Diagnostic Procedure

1. CHECK SHIFT LOCK SOLENOID VALVE SIGNAL

- With the scan tool, select view DTC and data stream for A/T.
- Start the engine.
- Monitor the value of the gear position as indicated in the following table while driving:

SELECT POSITION	RANGE	SHIFT SOLENOID VALVE 1	SHIFT SOLENOID VALVE 2	SHIFT SOLENOID VALVE 3	SHIFT SOLENOID VALVE 4
P	0	-	-	#	-
R	R	-	-	-	-
N	0	-	-	#	-
D	1	-	-	#	#
	2	-	#	-	#
	3	-	-	-	-
	4	#	#	-	-

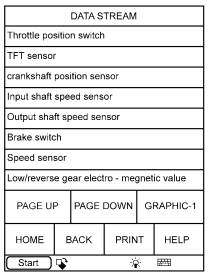

ltsmd080001t

Downloaded from www.Manualslib.com manuals search engine

- #: Operating solenoid

Is the check result normal and DTC not present?

Yes >> The condition that caused this DTC is intermittent (See Diagnostic Help in Section 08 Transaxle & Transfer Case).

No >> Go to the next step.

2. ACTUATE TEST

- With X-431, perform the solenoid actuate test.
- Watch, listen and monitor the shift lock solenoid condition and verify the shift lock solenoid works correctly and the solenoid should be heard when actuate shift lock solenoid valve.

Is the check result normal?

Yes >> Go to step 7.

No >> Go to the next step.

3. CHECK SHIFT LOCK SOLENOID VALVE RESISTANCE

- Turn the ignition switch off.
- Disconnect shift lock solenoid valve connector C-027.
- Check shift lock solenoid valve resistance as shown in the following table:

SHIFT LOCK SOLENOID VALVE RESISTANCE BASED ON TRANSAXLE TEMPERATURE	
Temperature	**Resistance**
23°C	36 - 44 Ω

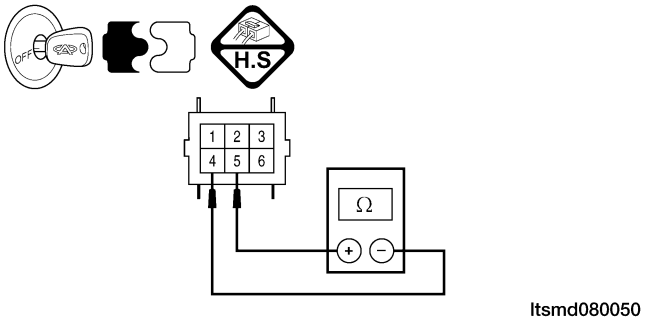

Is the check result normal?

Yes >> Replace the valve with a known good one.
With X-431, perform the solenoid actuate test.
– If the solenoid can be heard, go to step 7.
– If the solenoid can't be heard, go to the next step.

No >> Replace the shift lock solenoid for a mechanical problem.

Downloaded from www.Manualslib.com manuals search engine

4. CHECK SHIFT LOCK SOLENOID VALVE POWER SUPPLY

- Turn the ignition switch on.
- Check the shift lock solenoid valve power supply.
- Battery voltage should exist.

Is the check result normal?

Yes >> Go to the next step.

No >> Repair or replace the circuit for an open or short to ground in harness or connectors.

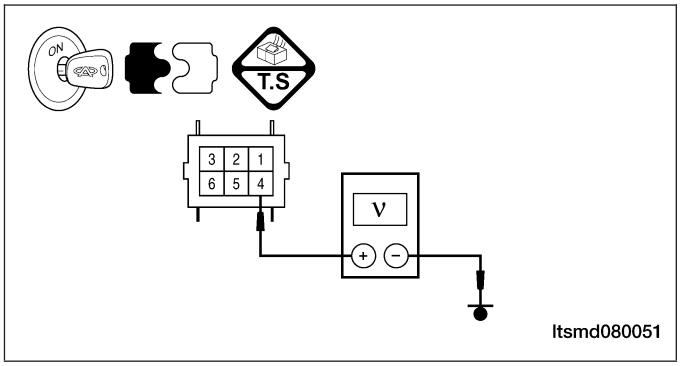

5. CHECK SHIFT LOCK SOLENOID VALVE CONTROL CIRCUIT

- Turn the ignition switch on.
- Check the shift lock solenoid control signal voltage of the shift lock solenoid when pressing the brake pedal.
- Check power supply between shift lock solenoid valve terminal 4 and 5 in the shifter selector connector C-027.

SHIFT SOLENOID CONDITION	
Condition	**Shift Lock Solenoid**
Terminal	Pins 4 - 5
Brake Pedal: ON	0 (V)
Brake Pedal: OFF	12 (V)

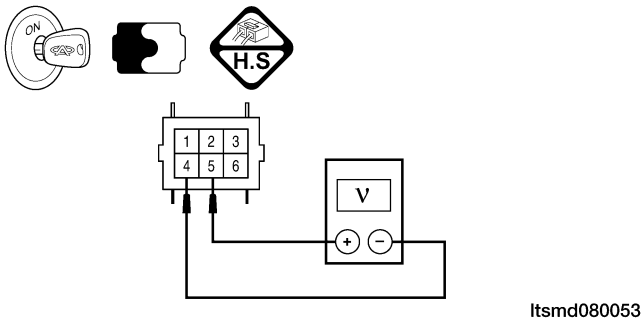

Does the voltage change as the brake pedal is ON and OFF?

Yes >> Go to step 7.

No >> Go to the next step.

Downloaded from www.Manualslib.com manuals search engine

6. CHECK SHIFT LOCK SOLENOID VALVE CONTROL CIRCUIT

- Turn the ignition switch off.
- Disconnect TCM connector.
- Check for harness continuity between the following terminals:

SHIFT LOCK RESISTANCE			
SHIFT LOCK SOLENOID VALVE CONNECTOR TERMINAL	TCM CONNECTOR E-036 TERMINAL	CONTINUITY	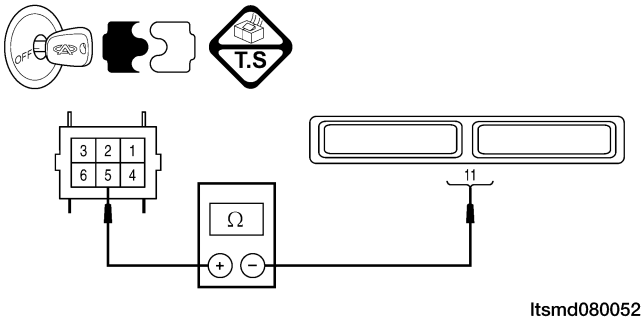
5	11	Yes	

- Check the harness for an open circuit or short to ground.

Is the check result normal?

Yes >> Go to the next step.

No >> Repair or replace the circuit for an open or short to ground in harness or connectors.

7. CHECK DTC

- With the X-431 scan tool, read TCM DTCs.
- Refer to ″DTC Confirmation Procedure″.

Is DTC P1928 present?

Yes >> Replace the TCM.

No >> The system is now operating properly.
Reassemble the vehicle and road test to verify the customers complaint is repaired.

Downloaded from www.Manualslib.com manuals search engine

P2709 - Shift Solenoid Valve 6 (SSV6) Short To Power Supply

TM - DP0 - EVS - 01

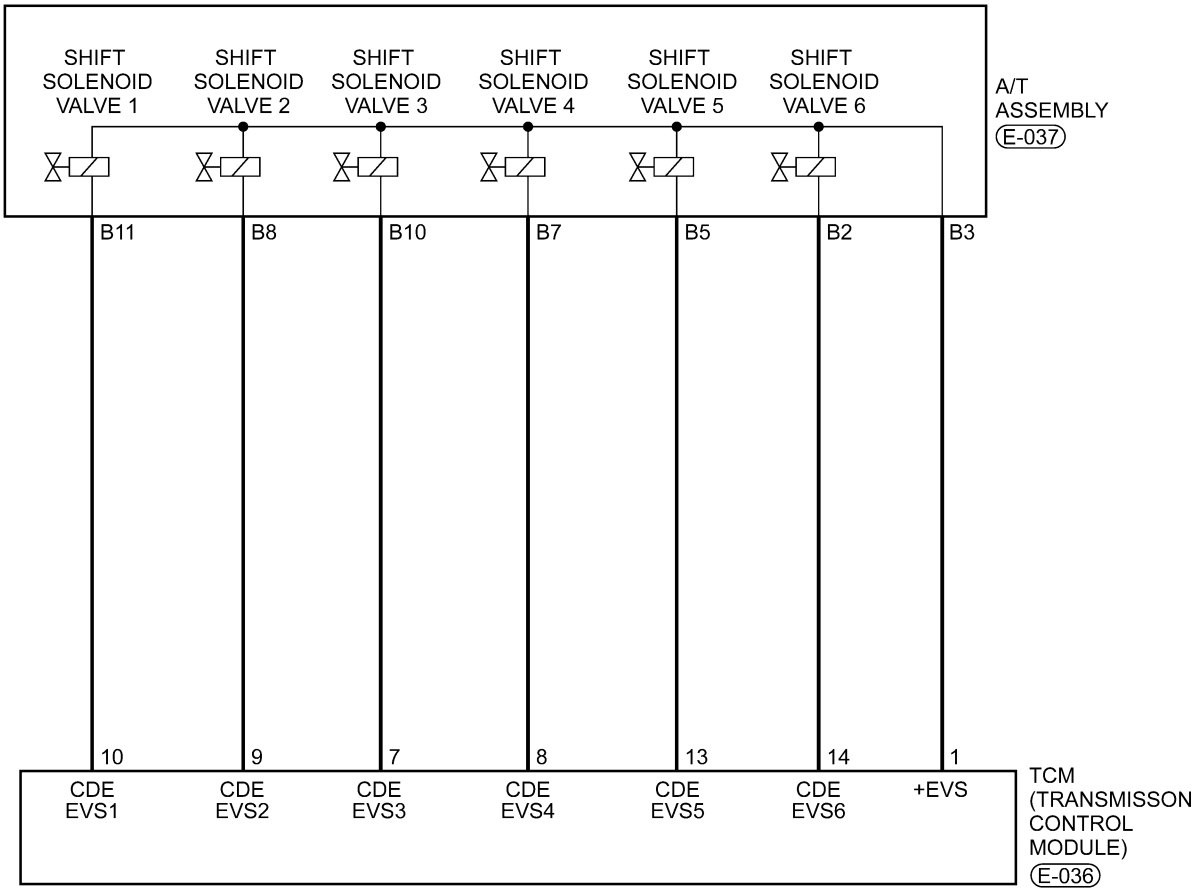

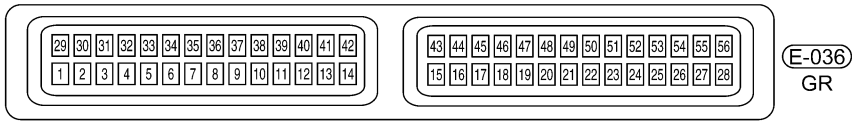

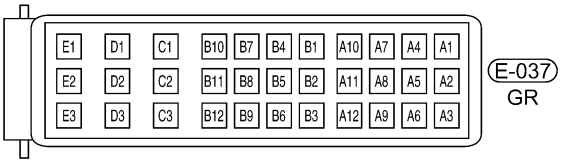

ltsmw080022t

Downloaded from www.Manualslib.com manuals search engine

On Board Diagnostic Logic

- Self-diagnosis detection logic.

DTC NO.	DTC DEFINITION	DTC DETECTION CONDITION	DTC SET CONDITION	POSSIBLE CAUSES
P2709	Shift Solenoid Valve 6 (SSV6) short to power supply	Vehicle is driving	The Transaxle Control Module (TCM) will set this DTC when the TCM detected an improper voltage drop when it tries to operate the solenoid valve.	• Shift Solenoid Valve 6 (SSV6) • Harness or connectors (The sensor circuit short to power supply) • Transaxle Control Module (TCM)

DTC Confirmation Procedure:

Before performing the following procedure, confirm that battery voltage is more than 12 V.

- Connect the X-431 scan tool to the diagnostic connector, press the POWER key to start the X-431.
- Start the engine and warm it to normal operating temperature.
- Drive the vehicle in 1st, 2nd, 3rd and 4th gears.
- With the scan tool, select view DTC and data stream.
- If the DTC is detected, the DTC condition is current. Go to Diagnostic Procedure - Step 1.
- If the DTC is not detected, the DTC condition is intermittent (See Diagnostic Help and Intermittent DTC Troubleshooting in Section 08 Transaxle & Transfer Case for more information).
- If using the appropriate diagnostic test tool, you can diagnose the TCM harness while the TCM is still connected.
- Using the appropriate diagnostic test tool in this way will help prevent electrical connector terminal damage.

NOTE :
While performing electrical diagnosis & testing, always refer to the electrical schematics for specific circuit and component information.

Diagnostic Procedure

1. CHECK A/T SOLENOID SIGNAL

- With the scan tool, select view DTC and data stream for A/T.
- Start the engine.
- Monitor the value of the gear position as indicated in the following table while driving:

X-431 REFERENCE VALUE					
SELECT POSITION	RANGE	SHIFT SOLENOID VALVE 1	SHIFT SOLENOID VALVE 2	SHIFT SOLENOID VALVE 3	SHIFT SOLENOID VALVE 4
P	0	-	-	#	-
R	R	-	-	-	-
N	0	-	-	#	-
D	1	-	-	#	#
	2	-	#	-	#
	3	-	-	-	-
	4	#	#	-	-

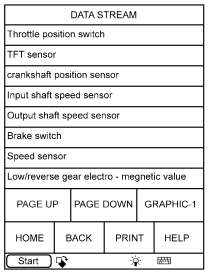

ltsmd080001t

Downloaded from www.Manualslib.com manuals search engine

Is the check result normal?

Yes >> The condition that caused this DTC is intermittent (See Diagnostic Help in Section 08 Transaxle & Transfer Case).

No >> Go to the next step.

2. ACTUATE TEST

- With X-431, perform the solenoid actuate test.
- The solenoid should be heard.

Is the check result normal?

Yes >> Go to step 6.

No >> Go to the next step.

3. CHECK SHIFT SOLENOID VALVE 6 (SSV6) RESISTANCE

NUMBER	SOLENOID
1	Shift Solenoid Valve 1
2	Shift Solenoid Valve 2
3	Shift Solenoid Valve 3
4	Shift Solenoid Valve 4
5	Shift Solenoid Valve 5
6	Shift Solenoid Valve 6
7	Pressure adjust solenoid valve
8	Torque converter lock solenoid valve
9	Manual valve
10	Valve body

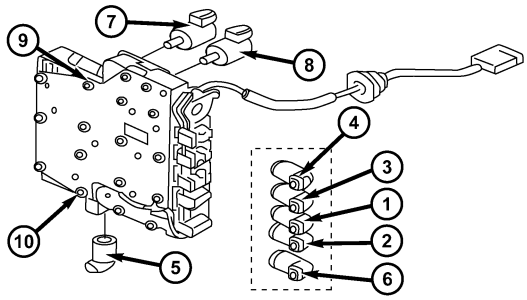

ltsmd080029

- Check SSV6 resistance as shown in the following table:

SHIFT SOLENOID VALVE	A/T ASSEMBLY TERMINAL
VALVE 1 (SSV1)	B11 - B3
VALVE 2 (SSV2)	B8 - B3
VALVE 3 (SSV3)	B10 - B3
VALVE 4 (SSV4)	B7 - B3
VALVE 5 (SSV5)	B5 - B3
VALVE 6 (SSV6)	B2 - B3
RESISTANCE (23°C)	38 - 42 (Ω)

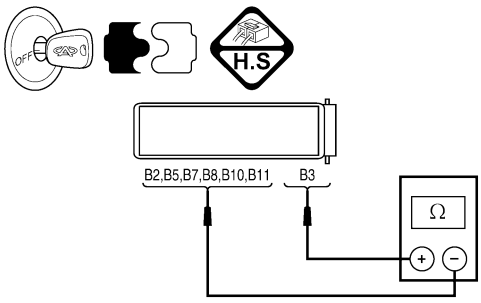

ltsmd080030

Downloaded from www.Manualslib.com manuals search engine

Is the check result normal?

Yes >> Replace the valve with a known good one.
With X-431, perform the solenoid actuate test.
– If the solenoid can be heard, go to step 6.
– If the solenoid can't be heard, go to the next step.

No >> Replace the damaged solenoid valve.

4. CHECK SHIFT SOLENOID VALVE 6 (SSV6) POWER SUPPLY

- Turn the ignition switch on.
- Check power supply between SSV6 E-037 terminal B2 and ground in the A/T assembly connector E-037.
- Battery voltage should exist.

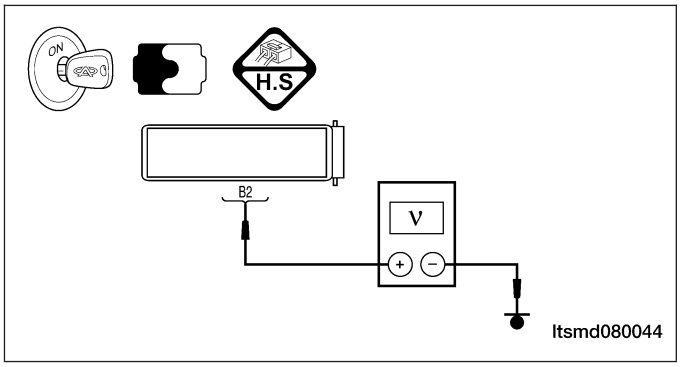

- Or using the appropriate diagnostic test tool and a digital multimeter perform the following:
- Check the EVS6 solenoid supply voltage between TCM pin 1 and TCM pin 14 when activating the EVS6 solenoid and deactivating the EVS6 solenoid.
- Check the shift solenoid control signal. Check the voltage of the shift solenoid in each shift position.
- Check the voltage of the EVS6 solenoid supply circuit between the transaxle assembly electrical connector pin B3 and pin B2.

SEQUENCE SOLENOID (EVS) CONDITION						
LEVER POSITION	TCM TERMINAL					
	EVS1	EVS2	EVS3	EVS4	EVS5	EVS6
	1 - 10	1 - 9	1 - 7	1 - 8	1 - 13	1 - 14
R	0 V	0 V	0 V	0 V	0 V	0 V
N/P	0 V	0 V	+12 V	0 V	0 V	0 V
1	0 V	0 V	+12 V	+12 V	0 V	0 V
2	0 V	+12 V	0 V	+12 V	0 V	0
3	0 V	0 V	0 V	0 V	0 V	0 V
4	+12 V	+12 V	0 V	0 V	0 V	0 V

Is the check result normal?

Yes >> Go to the next step.

No >> Repair or replace open circuit or short to ground in harness or connectors.

Downloaded from www.Manualslib.com manuals search engine

5. CHECK SHIFT SOLENOID VALVE 6 (SSV6) CONTROL CIRCUIT

- Turn the ignition switch off.
- Disconnect TCM connector.
- Disconnect A/T assembly connector.
- Turn the ignition switch on.
- Check harness for short to power supply.

A/T Assembly Connector E-037 Terminal B2	Ground	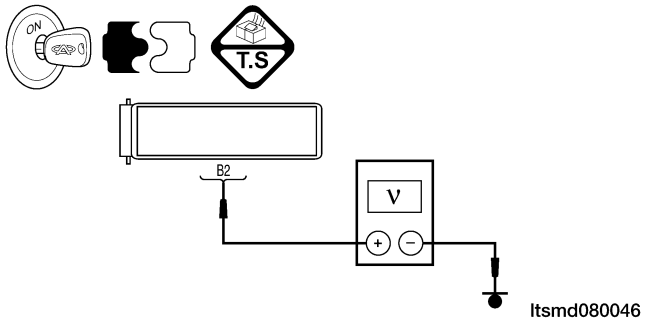

Is the check result normal?

Yes >> Go to the next step.

No >> Repair or replace short to power supply in harness or connectors.

6. CHECK DTC

- With the X-431 scan tool, read TCM DTCs.
- Refer to ″DTC Confirmation Procedure″.

Is DTC P0773 present?

Yes >> Replace the TCM.

No >> The system is now operating properly.
Reassemble the vehicle and road test to verify the customers complaint is repaired.

Downloaded from www.Manualslib.com manuals search engine

P2709 - Shift Solenoid Valve 6 (SSV6) Open Circuit Or Short To Ground

TM - DP0 - EVS - 01

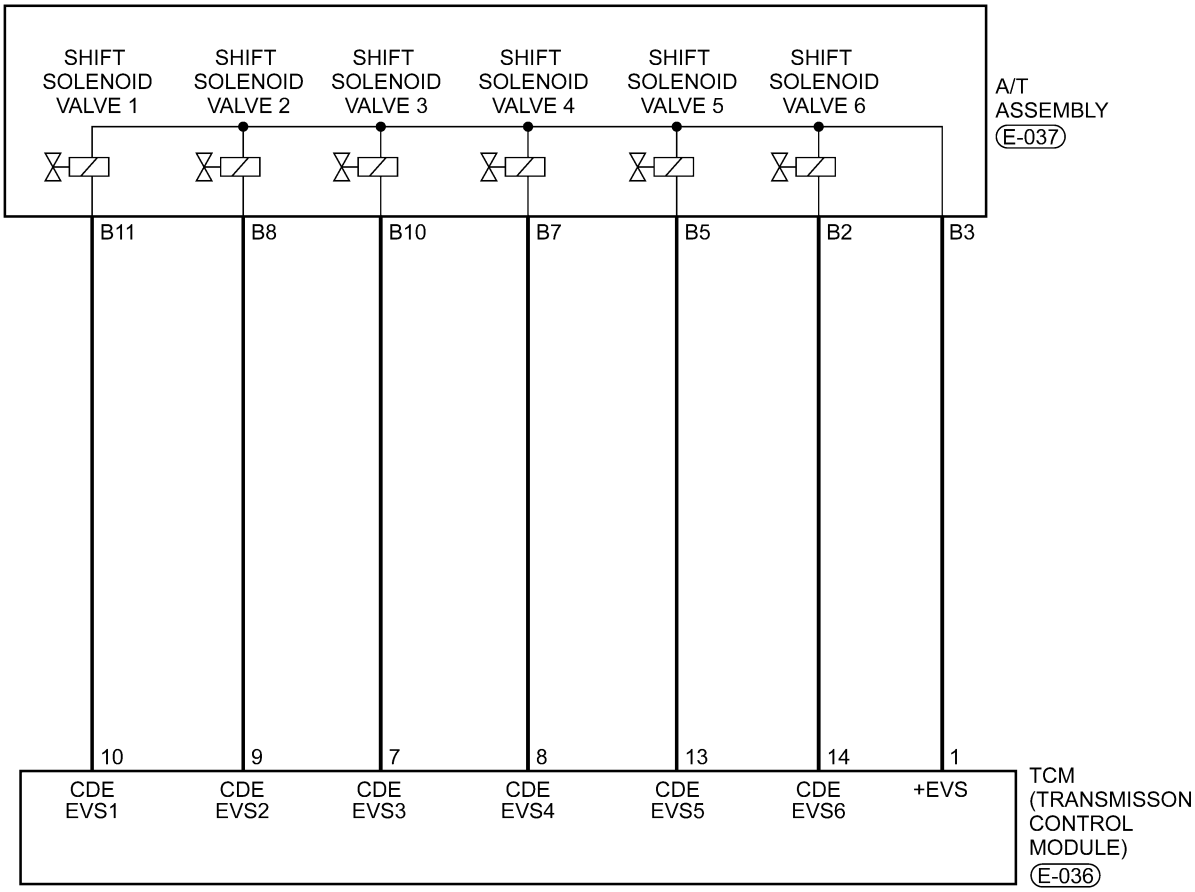

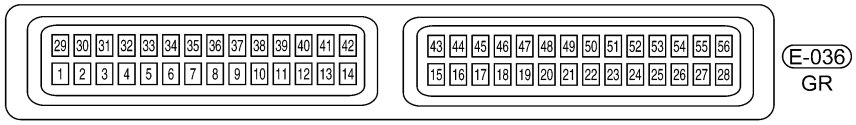

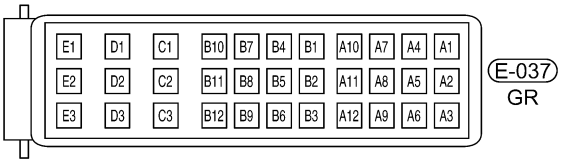

ltsmw080022t

Downloaded from www.Manualslib.com manuals search engine

On Board Diagnostic Logic

- Self-diagnosis detection logic.

DTC NO.	DTC DEFINITION	DTC DETECTION CONDITION	DTC SET CONDITION	POSSIBLE CAUSES
P2709	Shift Solenoid Valve 6 (SSV6) open or short to ground circuit	Vehicle is driving	The Transaxle Control Module (TCM) will set this DTC when the TCM detected an improper voltage drop when it tries to operate the solenoid valve.	• Shift Solenoid Valve 6 (SSV6) • Harness or connectors (The sensor circuit is open or shorted) • Transaxle Control Module (TCM)

DTC Confirmation Procedure:

Before performing the following procedure, confirm that battery voltage is more than 12 V.

- Connect the X-431 scan tool to the Data Link Connector (DLC) - use the most current software available.
- After connection, press [POWER] key to start X-431.
- Turn ignition switch on, with the scan tool, view and erase stored DTCs in the TCM.
- Start the engine and warm it to normal operating temperature.
- Drive the vehicle in 1st, 2nd, 3rd and 4th gears.
- With the scan tool, select view DTC and data stream.
- If the DTC is detected, the DTC condition is current. Go to Diagnostic Procedure - Step 1.
- If the DTC is not detected, the DTC condition is intermittent (See Diagnostic Help and Intermittent DTC Troubleshooting in Section 08 Transaxle & Transfer Case for more information).
- If using the appropriate diagnostic test tool, you can diagnose the TCM harness while the TCM is still connected.
- Using the appropriate diagnostic test tool in this way will help prevent electrical connector terminal damage.

NOTE :
While performing electrical diagnosis & testing, always refer to the electrical schematics for specific circuit and component information.

Downloaded from www.Manualslib.com manuals search engine

Diagnostic Procedure

1. CHECK A/T SOLENOID SIGNAL

- With the scan tool, select view DTC and data stream for A/T.
- Start the engine.
- Monitor the value of the gear position as indicated in the following table while driving:

X-431 REFERENCE VALUE					
SELECT POSITION	RANGE	SHIFT SOLENOID VALVE 1	SHIFT SOLENOID VALVE 2	SHIFT SOLENOID VALVE 3	SHIFT SOLENOID VALVE 4
P	0	-	-	#	-
R	R	-	-	-	-
N	0	-	-	#	-
D	1	-	-	#	#
	2	-	#	-	#
	3	-	-	-	-
	4	#	#	-	-

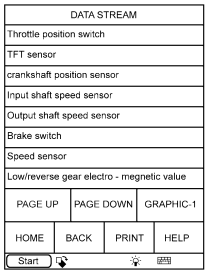

ltsmd080001t

Is the check result normal?

Yes >> The condition that caused this DTC is intermittent (See Diagnostic Help in Section 08 Transaxle & Transfer Case).

No >> Go to the next step.

2. ACTUATE TEST

- With X-431, perform the solenoid actuate test.
- The solenoid should be heard.

Is the check result normal?

Yes >> Go to step 6.

No >> Go to the next step.

Downloaded from www.Manualslib.com manuals search engine

3. CHECK SHIFT SOLENOID VALVE 6 (SSV6) RESISTANCE

NUMBER	SOLENOID
1	Shift Solenoid Valve 1
2	Shift Solenoid Valve 2
3	Shift Solenoid Valve 3
4	Shift Solenoid Valve 4
5	Shift Solenoid Valve 5
6	Shift Solenoid Valve 6
7	Pressure adjust solenoid valve
8	Torque converter lock solenoid valve
9	Manual valve
10	Valve body

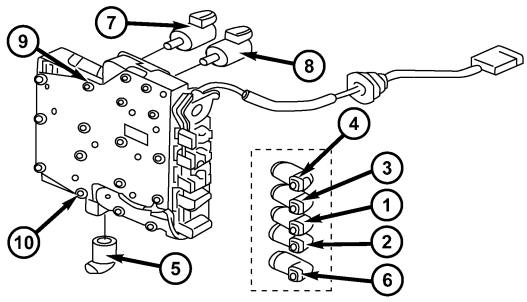

ltsmd080029

- Check SSV6 resistance as shown in the following table:

SHIFT SOLENOID VALVE	A/T ASSEMBLY TERMINAL
VALVE 1 (SSV1)	B11 - B3
VALVE 2 (SSV2)	B8 - B3
VALVE 3 (SSV3)	B10 - B3
VALVE 4 (SSV4)	B7 - B3
VALVE 5 (SSV5)	B5 - B3
VALVE 6 (SSV6)	B2 - B3
RESISTANCE (23°C)	38 - 42 (Ω)

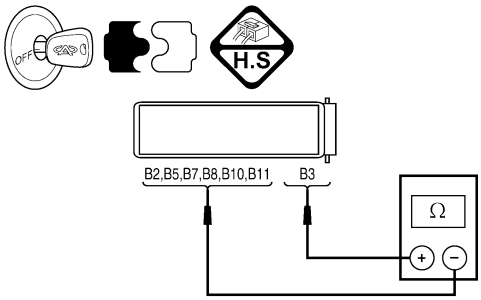

ltsmd080030

Is the check result normal?

Yes >> Replace the valve with a known good one.
With X-431, perform the solenoid actuate test.
– If the solenoid can be heard, go to step 6.
– If the solenoid can't be heard, go to the next step.

No >> Replace the damaged solenoid valve.

Downloaded from www.Manualslib.com manuals search engine

4. CHECK SHIFT SOLENOID VALVE 6 (SSV6) POWER SUPPLY

- Turn the ignition switch on.
- Check power supply between SSV6 E-037 terminal B2 and ground in the A/T assembly connector E-037.
- Battery voltage should exist.

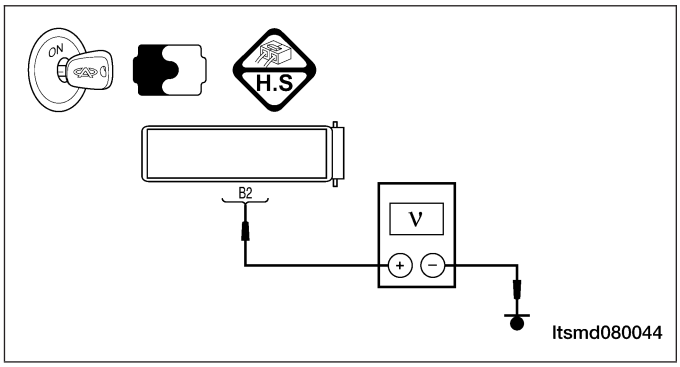

- Or using the appropriate diagnostic test tool and a digital multimeter perform the following:
- Check the EVS6 solenoid supply voltage between TCM pin 1 and TCM pin 14 when activating the EVS6 solenoid and deactivating the EVS6 solenoid.
- Check the shift solenoid control signal. Check the voltage of the shift solenoid in each shift position.
- Check the voltage of the EVS6 solenoid supply circuit between the transaxle assembly electrical connector pin B3 and pin B2.

SEQUENCE SOLENOID (EVS) CONDITION						
LEVER POSITION	TCM TERMINAL					
	EVS1	EVS2	EVS3	EVS4	EVS5	EVS6
	1 - 10	1 - 9	1 - 7	1 - 8	1 - 13	1 - 14
R	0 V	0 V	0 V	0 V	0 V	0 V
N/P	0 V	0 V	+12 V	0 V	0 V	0 V
1	0 V	0 V	+12 V	+12 V	0 V	0 V
2	0 V	+12 V	0 V	+12 V	0 V	0
3	0 V	0 V	0 V	0 V	0 V	0 V
4	+12 V	+12 V	0 V	0 V	0 V	0 V

Is the check result normal?

Yes >> Go to the next step.

No >> Repair or replace open circuit or short to ground in harness or connectors.

Downloaded from www.Manualslib.com manuals search engine

5. CHECK SHIFT SOLENOID VALVE 6 (SSV6) CONTROL CIRCUIT

- Turn the ignition switch off.
- Disconnect TCM connector.
- Disconnect A/T assembly connector.
- Check for harness continuity between the following terminals:

TCM TERMINAL RESISTANCE			
A/T ASSEMBLY CONNECTOR E-037 TERMINAL	TCM CONNECTOR E-036 TERMINAL	CONTINUITY	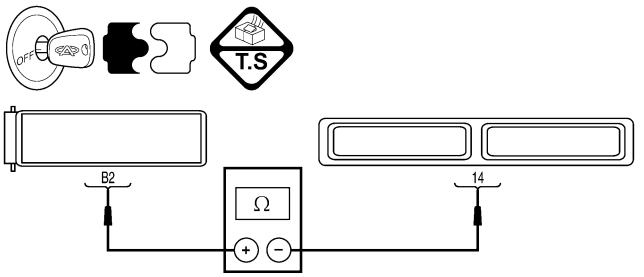
B2	14	Yes	

- Check the harness for short to ground.

Is the check result normal?

Yes >> Go to the next step.

No >> Repair or replace open circuit or short to ground in harness or connectors.

6. CHECK DTC

- With the X-431 scan tool, read TCM DTCs.
- Refer to ″DTC Confirmation Procedure″.

Is DTC P2709 present?

Yes >> Replace the TCM.

No >> The system is now operating properly.
Reassemble the vehicle and road test to verify the customers complaint is repaired.

Downloaded from www.Manualslib.com manuals search engine

P2753 - EPDE Circuit Or Short To Power Supply
P2753 - EPDE Open Circuit Or Short To Ground

TM - DP0 - OFS - 01

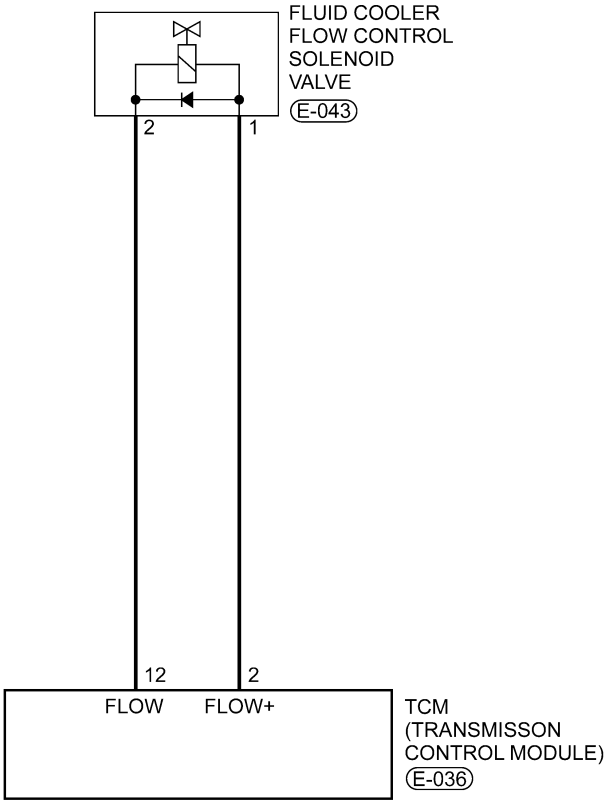

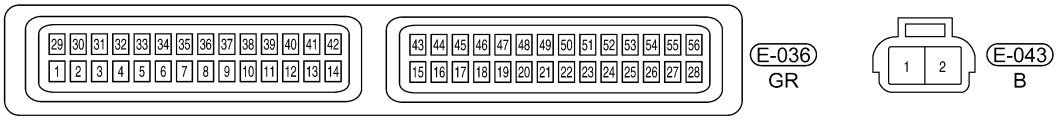

ltsmw080014t

Downloaded from www.Manualslib.com manuals search engine

On Board Diagnostic Logic

- Self-diagnosis detection logic.

DTC NO.	DTC DEFINITION	DTC DETECTION CONDITION	DTC SET CONDITION	POSSIBLE CAUSE
P2753	Fluid cooler flow control solenoid (EPDE) short to power supply	Ignition switch on or vehicle is driving	The Transaxle Control Module (TCM) will set this DTC when the TCM detected the EPDE solenoid circuit is short to power supply when the TFT is more than 108°C.	• Fluid cooler flow control solenoid valve (EPDE) • Harness or connectors (The sensor circuit is shorted) • Transaxle Control Module (TCM)
P2753	Fluid cooler flow control solenoid (EPDE) open circuit or short to ground		The Transaxle Control Module (TCM) will set this DTC when the TCM detected the EPDE solenoid circuit is short to ground, or open when the TFT is over 108°, and the engine speed is above 2000 RPM.	• Fluid cooler flow control solenoid valve (EPDE) • Harness or connectors (The sensor circuit is open or shorted) • Transaxle Control Module (TCM)

DTC Confirmation Procedure:

Before performing the following procedure, confirm that battery voltage is more than 12 V.

- Turn ignition switch off.
- Connect the X-431 scan tool to the Data Link Connector (DLC) - use the most current software available.
- Start the engine and warm it to normal operating temperature.
- Drive the vehicle.
- With the scan tool, select view DTC and data stream.
- If the DTC is detected, the DTC condition is current. Go to Diagnostic Procedure - Step 1.
- If the DTC is not detected, the DTC condition is intermittent (See Diagnostic Help and Intermittent DTC Troubleshooting in Section 08 Transaxle & Transfer Case for more information).
- If using the appropriate diagnostic test tool, you can diagnose the TCM harness while the TCM is still connected.
- Using the appropriate diagnostic test tool in this way will help prevent electrical connector terminal damage.

NOTE :
While performing electrical diagnosis & testing, always refer to the electrical schematics for specific circuit and component information.

Downloaded from www.Manualslib.com manuals search engine

Diagnostic Procedure

1. CHECK A/T SOLENOID SIGNAL

- With the scan tool, select view DTC and data stream for A/T.
- Start the engine.
- Monitor the value of the gear position as indicated in the following table while driving:

X-431 REFERENCE VALUE					
SELECT POSITION	RANGE	SHIFT SOLENOID VALVE 1	SHIFT SOLENOID VALVE 2	SHIFT SOLENOID VALVE 3	SHIFT SOLENOID VALVE 4
P	0	-	-	#	-
R	R	-	-	-	-
N	0	-	-	#	-
D	1	-	-	#	#
	2	-	#	-	#
	3	-	-	-	-
	4	#	#	-	-

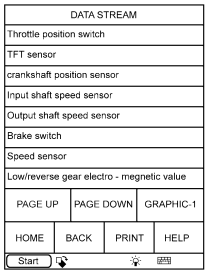

ltsmd080001t

- #: Operating solenoid

Is the check result normal and DTC not present?

Yes >> The condition that caused this DTC is intermittent (See Diagnostic Help in Section 08 Transaxle & Transfer Case).

No >> Go to the next step.

2. ACTUATE TEST

- With X-431, perform the solenoid actuate test.
- The solenoid should be heard.

CHECK CONDITION		
SOLENOID	ACTUATE CONDITION	SOLENOID CONDITION
Fluid Cooler Flow Control Solenoid Valve	TFT ≥ 100°C	Open
	RPM ≥ 2000 RPM	

EPDE RANGE CONDITION		
EPDE PIN	12-2	12-2
CONDITION	TFT ≥ 100°C RPM ≥ 2000 RPM	TFT ≤ 60°C RPM ≤ 2000
VALUE (V)	12	0

Is the check result normal?

Yes >> Go to step 6.

No >> Go to the next step.

Downloaded from www.Manualslib.com manuals search engine

3. CHECK FLUID COOLER FLOW CONTROL SOLENOID VALVE RESISTANCE

- Turn ignition switch off.
- Disconnect fluid cooler flow control solenoid valve (1) connector E-043.
- Check fluid cooler flow control solenoid valve resistance as shown in the following table:

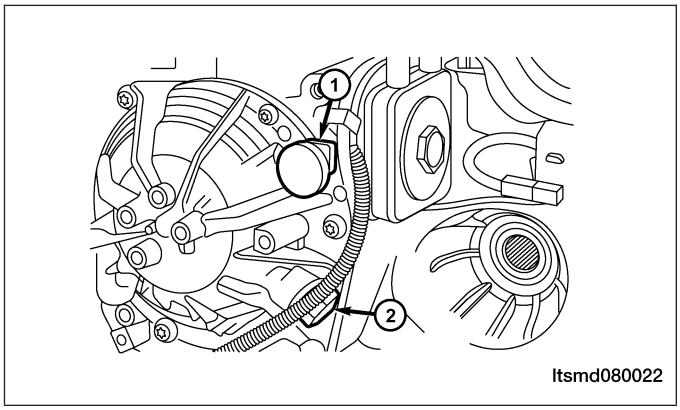

EPDE TERMINAL RESISTANCE	
EPDE Solenoid (1) Resistance Based On Transaxle Temperature	
Temperature	**Resistance**
23°C	36 - 44 Ω

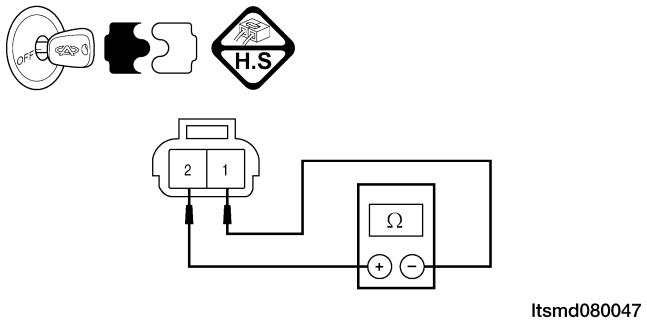

Is the check result normal?

Yes >> Replace the valve with a known good one.
With X-431, perform the solenoid actuate test.
– If the solenoid can be heard, go to step 6.
– If the solenoid can't be heard, go to the next step.

No >> Replace the damaged solenoid valve.

4. CHECK FLUID COOLER FLOW CONTROL SOLENOID VALVE POWER SUPPLY

- Turn ignition switch on.
- Check power supply between fluid cooler flow control solenoid valve E-043 terminal 1 and ground in the A/T assembly connector E-043.
- Battery voltage should exist.

Is the check result normal?

Yes >> Go to the next step.

No >> Repair or replace the open circuit or short to ground in harness or connectors.

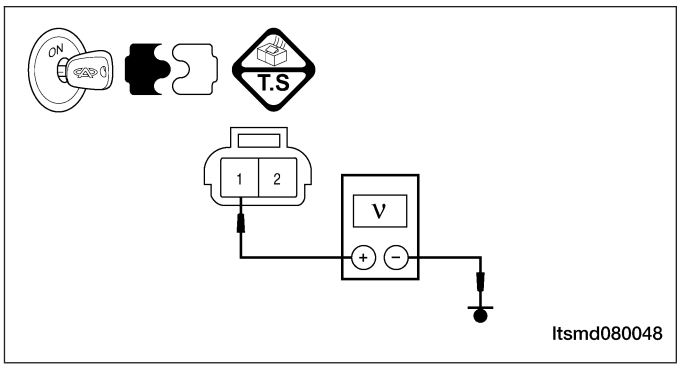

Downloaded from www.Manualslib.com manuals search engine

5. CHECK FLUID COOLER FLOW CONTROL SOLENOID VALVE CONTROL CIRCUIT

- Turn ignition switch off.
- Disconnect TCM connector.
- Check the harness for an open or short to ground.
- Check the harness for short to power.

Is the check result normal?

Yes >> Go to the next step.

No >> Repair or replace the circuit for an open or short to power or short to ground in harness or connectors.

6. CHECK DTC

- With the X-431 scan tool, read TCM DTCs.
- Refer to ″DTC Confirmation Procedure″.

Is DTC P2753 still present?

Yes >> Replace the TCM.

No >> The system is now operating properly.
Reassemble the vehicle and road test to verify the customers complaint is repaired.

Downloaded from www.Manualslib.com manuals search engine

U0001 - CAN Communication Error

TM - DP0 - CAN - 01

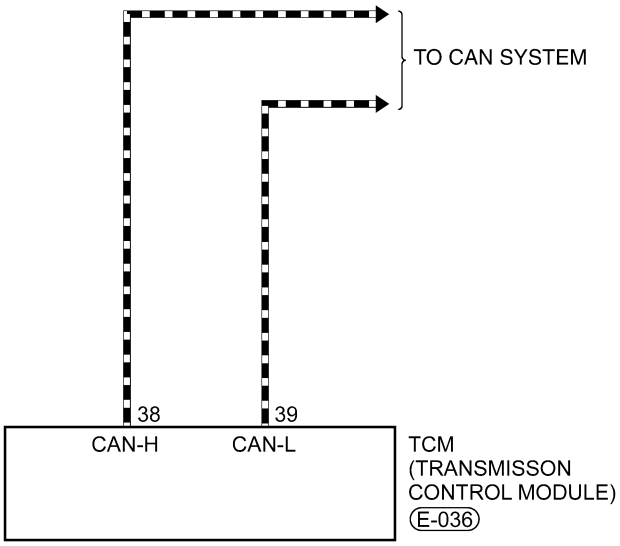

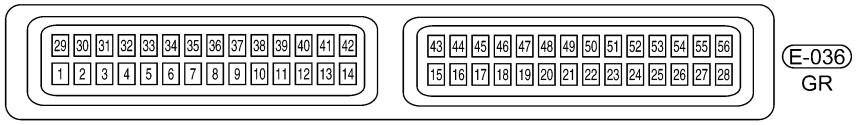

ltsmw080019t

Downloaded from www.Manualslib.com manuals search engine

On Board Diagnostic Logic

- Self-diagnosis detection logic.

DTC NO.	DTC DEFINITION	DTC DETECTION CONDITION	DTC SET CONDITION	POSSIBLE CAUSE
U0001	CAN Communication Error	With the ignition switch on	The Transaxle Control Module (TCM) lost communication over the CAN-Bus circuit. The circuit is continuously monitored.	• CAN Converter • Harness or connectors (The sensor circuit is open or shorted) • ECM • Transaxle Control Module (TCM)

DTC Confirmation Procedure:

Before performing the following procedure, confirm that battery voltage is more than 12 V.
- Turn ignition switch off.
- Connect the X-431 scan tool to the Data Link Connector (DLC) - use the most current software available.
- Start the engine and warm it to normal operating temperature.
- With the scan tool, select view DTC and data stream.
- If the DTC is detected, the DTC condition is current. Go to Diagnostic Procedure - Step 1.
- If the DTC is not detected, the DTC condition is intermittent (See Diagnostic Help and Intermittent DTC Troubleshooting in Section 08 Transaxle & Transfer Case for more information).

NOTE :
- Ensure that the battery is fully charged.
- Before performing any DTC diagnostic procedures, verify the TCM power and ground circuits are properly connected.
- Before performing the diagnostic procedure, repair all other TCM DTCs first.

NOTE :
While performing electrical diagnosis & testing, always refer to the electrical schematics for specific circuit and component information.

Diagnostic Procedure

1. CHECK GROUND CONNECTION

- Turn ignition switch off.
- Loosen and retighten ground screws on the body (See Ground Inspection in Section 12 Brakes).
- Inspect the ground connection C-201 mounting position (See Vehicle Wiring Harness Layout - Main Harness in Section 16 Wiring).

Are the ground connections OK?

Yes >> Go to the next step.

No >> Repair or replace the ground connections.

Downloaded from www.Manualslib.com manuals search engine

2. CHECK DTC

- Turn ignition switch on.
- With the scan tool, select view TCM DTC and data stream.

Is DTC U0001 present?

Yes >> Go to the next step.

No >> The condition that caused this DTC is intermittent (See Diagnostic Help in Section 08 Transaxle & Transfer Case).
Erase all codes and test drive the vehicle to verify the repair is complete.

3. CHECK OTHER MODULE DTC

- With the scan tool X-431, attempt to enter all the other CAN communication modules such as ECM, CAN converter module.
- Read the CAN DTCs.

Were other modules DTCs found?

Yes >> If all of the other modules have the same DTC ″CAN Communication″, go to the next step.
If all of the other modules have the DTC ″Lost communication with TCM″, and do not have the ″CAN Communication″, replace and program the TCM module.

No >> Go to step 8.

4. CHECK CAN-BUS LINE TERMINAL RESISTANCE IN TCM

- Turn the ignition switch off.
- Disconnect the negative battery cable.
- Disconnect TCM connector.
- Check resistance between TCM connector 38 and 39.

CAN TERMINAL RESISTANCE			
CAN-H	CAN-L	RESISTANCE	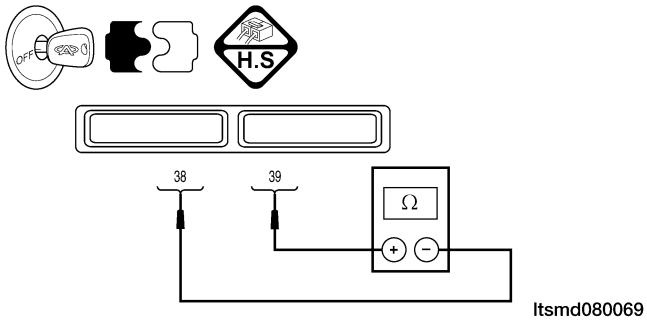
38	39	123 Ω	

Is the check result normal?

Yes >> Go to the next step.

No >> Replace TCM.
The problem caused by TCM internal error.

Downloaded from www.Manualslib.com manuals search engine

5. CHECK CAN-BUS LINE

- Disconnect ECM and CAN converter connectors.
- Check for harness continuity between the following terminals:

CHECK CAN-H CONTINUITY				
CAN	TCM TERMINAL	ECM TERMINAL	CONTINUITY	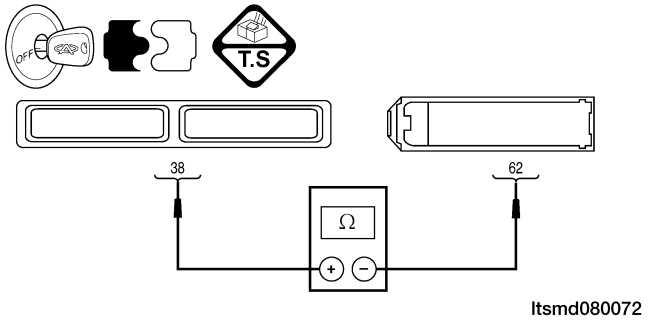
CAN-H	38	62	Yes	

CHECK CAN-L CONTINUITY				
CAN	TCM TERMINAL	ECM TERMINAL	CONTINUITY	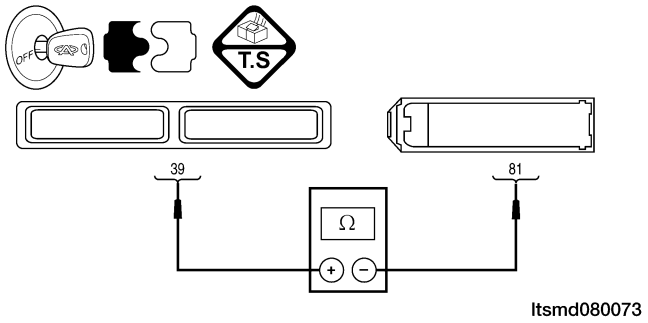
CAN-L	39	81	Yes	

- Check the harness for short to ground and short to power.

Is the check result normal?

Yes >> Go to the next step.

No >> Repair or replace CAN-Bus line.

Downloaded from www.Manualslib.com manuals search engine

6. CHECK CAN-BUS LINE

- Connect the negative battery cable.
- Connect TCM and ECM connectors.
- Turn the ignition switch on.
- Check CAN-Bus voltage between the following terminals:

CAN-H

– 0.025 V should exist with bus communication inactive.
– 0.65 V should exist with bus communication active.

CAN-L

– 11 V should exist with bus communication inactive.
– 4.65 V should exist with bus communication active.

- Check CAN-Bus voltage between the following terminals:

CHECK CAN-BUS LINE VOLTAGE		
DLC TERMINAL	**GROUND**	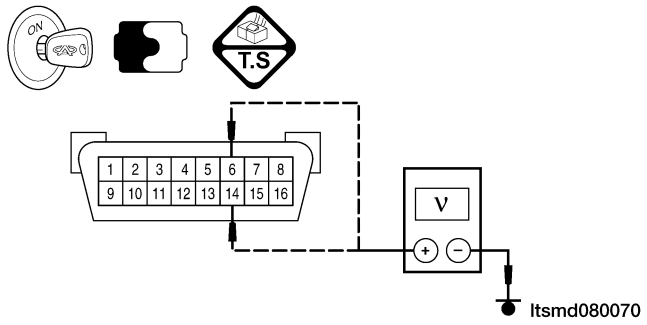
6 (CAN-H)	Ground	
14 (CAN-L)		

Is the check result normal and DTC U0001 not present?

Yes >> Replace CAN converter.
The problem caused by CAN converter internal error.

No >> Go to the next step.

7. CHECK CAN-BUS LINE

- Turn ignition switch off.
- Connect CAN converter.
- Disconnect ECM connectors.
- Turn ignition switch on.
- Check CAN-Bus voltage as the standard value.

Is the check result normal and DTC U0001 not present?

Yes >> Replace and program ECM.
The problem caused by ECM internal error.

No >> Go to the next step.

Downloaded from www.Manualslib.com manuals search engine

8. CHECK THE TCM ELECTRICAL CONNECTOR

- Inspect the TCM electrical connector pins for proper fit or any chafed, pierced, pinched, or partially broken wires.
- With the X-431 scan tool, read TCM DTCs.

Is the check result normal and DTC U0001 not present?

Yes >> The system is now operating properly.
Reassemble the vehicle and road test to verify the customers complaint is repaired.

No >> Replace the TCM.
The problem caused by TCM internal error.

Downloaded from www.Manualslib.com manuals search engine

DPO Automatic Transaxle Assembly

Removal & Installation

1. Raise and support the vehicle.
2. Remove the engine cover.
3. Remove the battery and battery tray (See Battery Removal & Installation in Section 05 Starting & Charging).
4. Remove the air cleaner and air duct assembly.
5. Drain the cooling system (See Cooling System Draining Procedure in Section 06 Cooling System).
6. Remove the base mounting (1) of the air cleaner housing assembly.

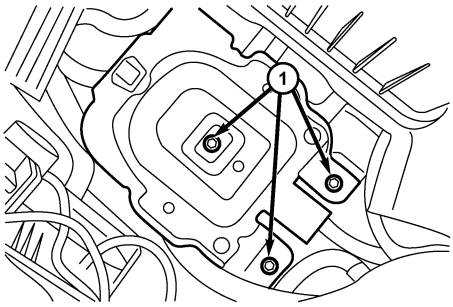

ltsm050002

7. Remove the transaxle ground cable.
8. Disconnect and remove the electrical connectors for the following components:
   - Vehicle speed sensor (2)
   - Crankshaft position sensor
   - Automatic transaxle assembly (3)
9. Disconnect the transaxle fluid coolant lines (4) using a suitable tool.
10. Remove the shift cable (1) from the transaxle assembly.

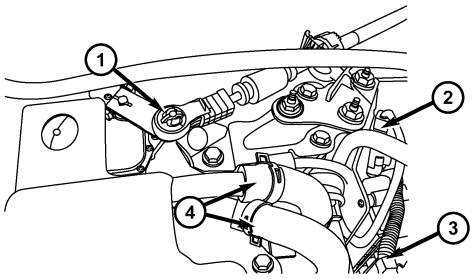

besm080057

11. Raise the vehicle.
12. Remove the drain plug (2) with an inner square socket wrench.
13. Remove the fluid limiting duct (1) with an 8 mm inner hex socket wrench.

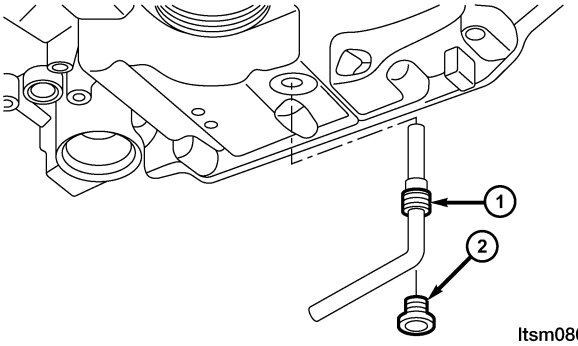

ltsm080184

14. Drain the transaxle fluid.

Downloaded from www.Manualslib.com manuals search engine

15. Remove the bolts attaching the transaxle cooling lines to the transaxle.
16. Remove the starter motor (See Starter Removal & Installation in Section 05 Starting & Charging).
17. Remove the bolts (1) attaching the drive plate to the torque converter (three bolts total).
    (Tighten: Drive plate bolts to 75 N·m)

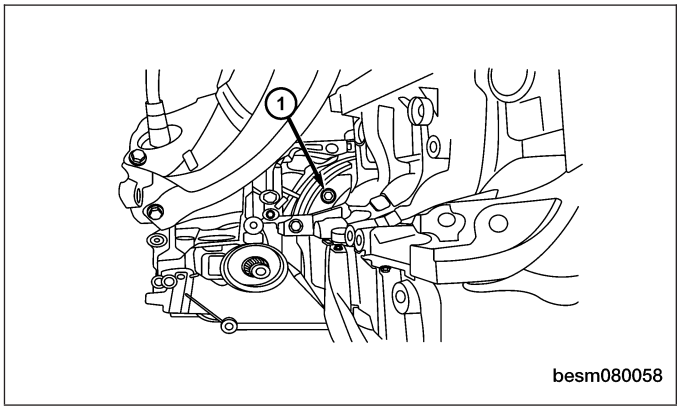

18. Remove the engine to transaxle upper bolts.
    (Tighten: Engine to transaxle upper bolts to 80 N·m)
19. Remove both front axle shafts (See Front Axle Shaft Removal & Installation in Section 09 Driveline & Axle).
20. Remove transaxle mount nuts (2) and the transaxle mount bracket bolts (1).
    (Tighten: Transaxle mount nut to 120 N·m)

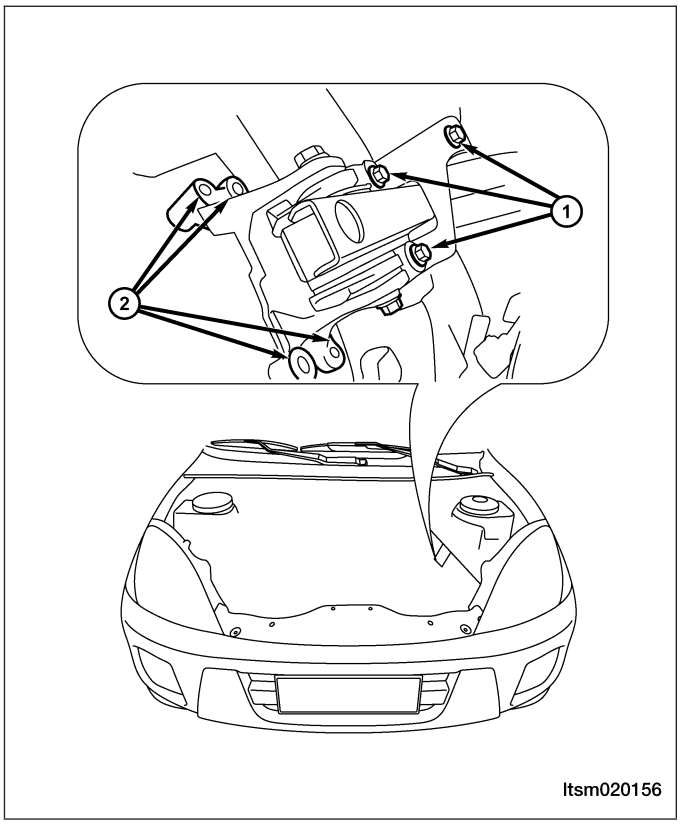

21. Remove the engine undercover and splash shields.
22. Support the engine using an engine support fixture or suitable jack.
23. Remove the front sub-frame assembly (See Sub-Frame Assembly Removal & Installation in Section 10 Suspension).
24. Remove the engine to transaxle lower bolts.
    (Tighten: Engine to transaxle lower bolts to 80 N·m)
25. Remove the bolts that mount the side sill to vehicle body.
    (Tighten: Side sill to vehicle body bolts to 120 N·m)

Downloaded from www.Manualslib.com manuals search engine

26. Remove the front engine mount bolts (1).
    (Tighten: Front mount bolts to 60 N·m)

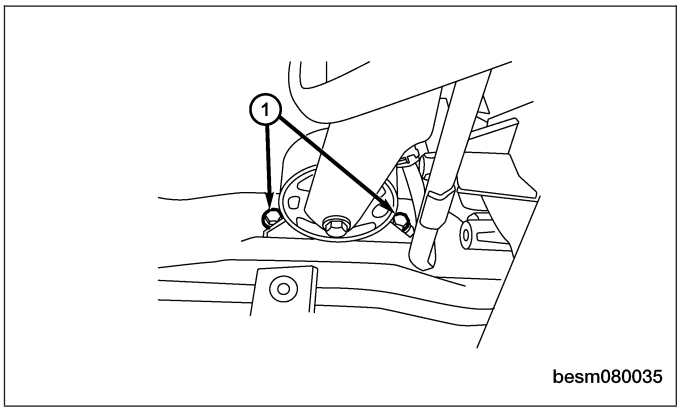

27. Remove the rear engine mount bolts (1) and the rear engine mount bracket bolt (2).
    (Tighten: Rear mount bolts to 40 N·m)

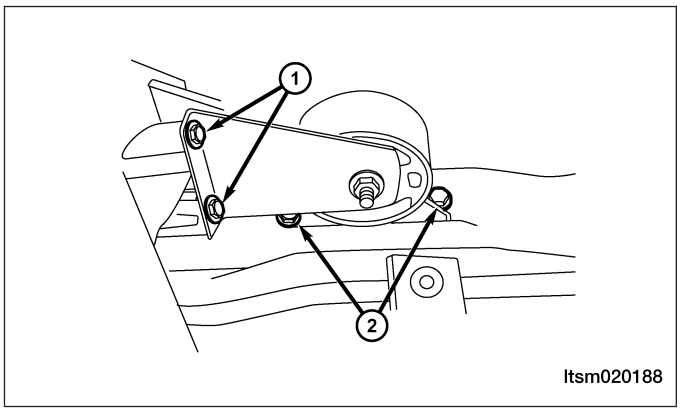

28. Remove the transaxle mount bolts.
    (Tighten: Transaxle mount bolts to 40 N·m)
29. Separate the transaxle from the engine and remove the transaxle from the vehicle.

WARNING!
Use a suitable jack to support the transaxle during removal.

30. Installation is in the reverse order of removal.

Downloaded from www.Manualslib.com manuals search engine

Installation Notes:

- Refill the transaxle fluid through the fill hole (1) shown in the figure.

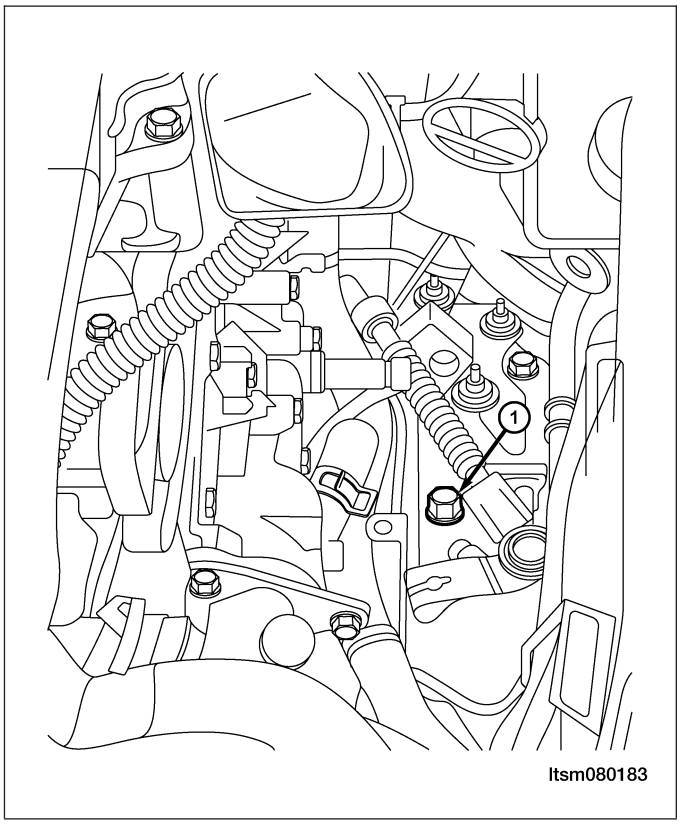

- To avoid fluid spills, make sure to use a funnel.
- Add 3.5 L of new automatic transaxle fluid into the transaxle.
- Start the engine and maintain an idle.
- Connect the X-431 scan tool and establish a connection with the TCM and monitor the transaxle fluid temperature.
- Open the drain plug (2) when the fluid temperature reaches 60 ± 1°. Loosen the fluid limiting duct (1) if necessary.

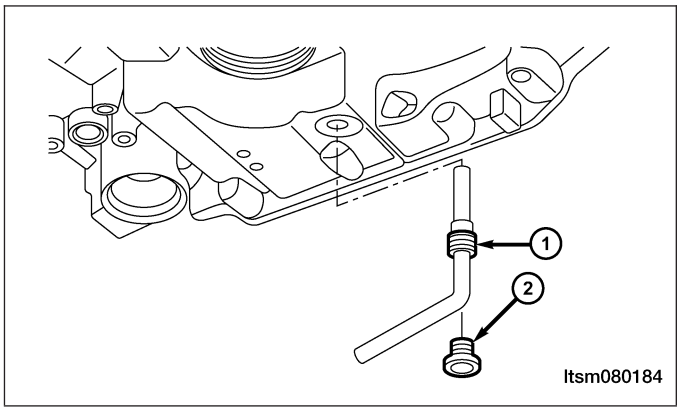

- Catch any fluid that drains out with a measuring cup.
- If no fluid drains out, or the drained fluid is less than 0.1 liter perform the following:
  - 1. Turn off the ignition switch.
  - 2. Add 0.5 liter fluid to the transaxle.
  - 3. Allow the transaxle fluid to cool down to 50°C.
  - 4. Start the engine and maintain an idle.
  - 5. Open the drain plug when the fluid temperature reaches 60 ± 1°C.
  - 6. Catch any fluid that drains out with a measuring cup.
  - 7. Repeat the above steps, until the drained fluid exceeds 0.1 liter.
  - 8. Tighten the drain plug to 33 N·m.

Downloaded from www.Manualslib.com manuals search engine

WARNING!

The gearshift lever must be shifted to gear P while adding transaxle fluid.

Automatic Shifter Selector

Removal & Installation

1. Raise and support the vehicle.
2. Disconnect the negative battery cable.
3. Remove the air cleaner and air duct transaxle assembly.
4. Remove the base mounting (1) of the air cleaner transaxle assembly.

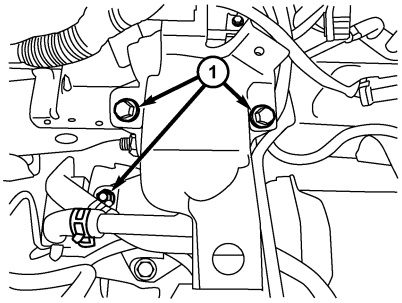

besm080038

5. Depress the clip then remove the shift cable (1) from the transaxle gearshift switch and remove the shift cable clamp (2).

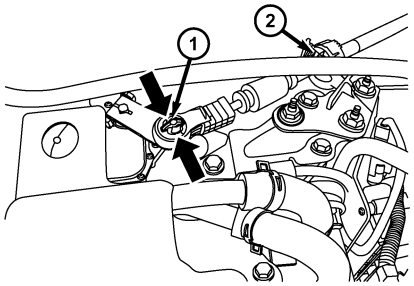

ltsm080186

6. Remove the gearshift knob (1).
7. Remove the gearshift cover (2) from the lower console.

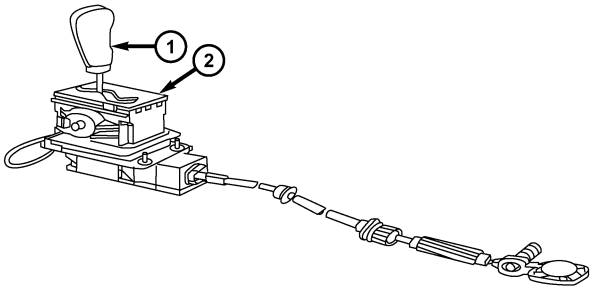

besm080049

8. Apply the parking brake (apply the parking brake handle to clear lower console during removal).
9. Remove the lower console (See Lower Console Removal & Installation in Section 15 Body & Accessories).

Downloaded from www.Manualslib.com manuals search engine

10. Disconnect the gearshift mechanism connector (1).
11. Remove the shift cable from the gearshift mechanism.
12. Remove the four bolts (2) and then remove the gearshift mechanism from the bracket.
13. Installation is in the reverse order of removal.

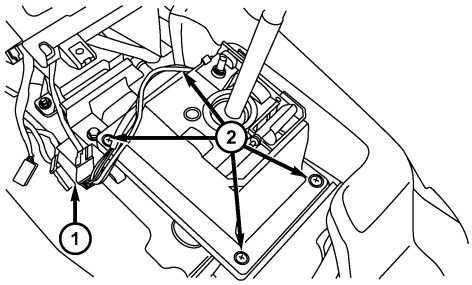

ltsm020228

NOTE :
If the battery has low voltage, press the release switch (1) to move the gearshift lever.

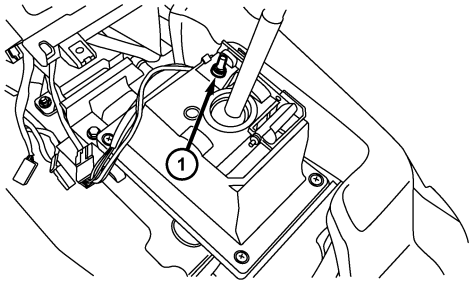

ltsm080188

Downloaded from www.Manualslib.com manuals search engine

Transaxle Control Module (TCM)

Removal & Installation

1. Disconnect the negative battery cable.
2. Remove the glove box retaining bolts (1).
3. Disconnect the TCM electrical connectors.

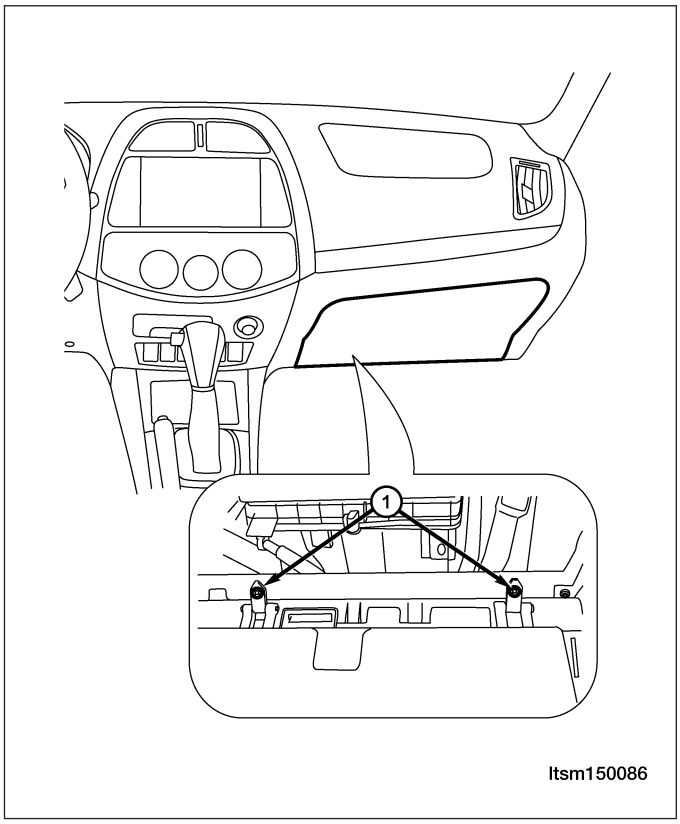

4. Remove the four bolts (1) that mount the TCM to the instrument panel bracket.
5. Remove the TCM.
6. Installation is in the reverse order of removal.

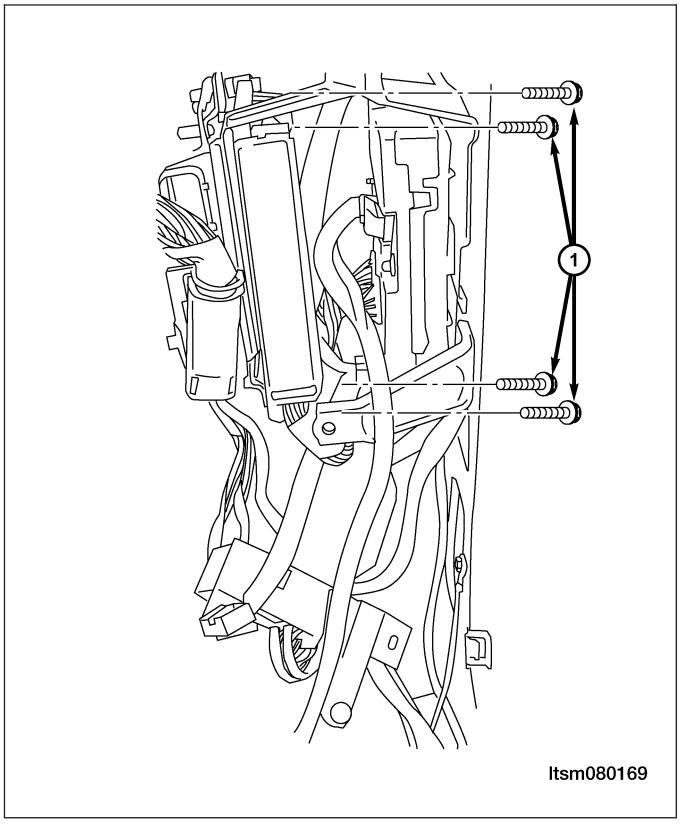

Downloaded from www.Manualslib.com manuals search engine

F4A4 AUTOMATIC TRANSAXLE

GENERAL INFORMATION 08-144
Description 08-144
Operation 08-145
Specifications 08-147
Special Tools 08-148
Electrical Schematics 08-152
Transaxle Control Module (TCM) Connector Pin-Out Table 08-157

DIAGNOSIS & TESTING 08-158
Diagnostic Help 08-158
Diagnostic Tools 08-158

Diagnostic Trouble Code (DTC) List 08-159
F4A4 Automatic Transaxle DTC List 08-159

Diagnostic Trouble Code (DTC) Tests 08-160
15 - TFT Sensor Open Circuit 08-160
22 - Input Speed Sensor 08-163
23 - Output Speed Sensor Fault 08-168
26 - Brake Pedal Position Switch Circuit Malfunction 08-174
31 - Reverse/Low Solenoid Malfunction 08-177
32 - Low Speed Solenoid Malfunction 08-182
33 - 2nd Gear Solenoid Open Circuit 08-188
34 - Overdrive Solenoid Circuit Malfunction 08-194
36 - Damper Clutch System Control Solenoid Malfunction 08-200
41 - First Gear, Ratio Out Of Limits 08-206
42 - Second Gear, Ratio Out Of Limits 08-212
43 - Third Gear, Ratio Out Of Limits 08-218
44 - Fourth Gear, Ratio Out Of Limits 08-224
46 - Reverse Gear, Ratio Out Of Limits 08-230
54 - Electrical Relay Open Circuit 08-236

ON-VEHICLE SERVICE 08-240

F4A4 Automatic Transaxle Assembly 08-240
Removal & Installation 08-240

Automatic Shifter Selector 08-243
Removal & Installation 08-243

Downloaded from www.Manualslib.com manuals search engine

GENERAL INFORMATION

Description

The transaxle gear train is comprised of two rows of planetary gear set, one one-way clutch and five actuators (three composite disc clutches and two composite disc brakes.

It is controlled with adaptive electronic controls and monitors. The hydraulic system of the transaxle consists of the transaxle fluid, fluid passages, hydraulic valves, fluid pump, and various line pressure control components.

The Transaxle Control Module (TCM) is the heart of the electronic control system and relies on information from various direct and indirect inputs (sensors, switches, etc.) to determine driver demand and vehicle operating conditions. With this information, the ECM/TCM can calculate and perform timely and quality shifts through various output or control devices.

The TCM also performs certain self-diagnostic functions and provides comprehensive information (sensor data, DTCs, etc.) which is helpful in proper diagnosis and repair. This information can be viewed with the X-431 scan tool.

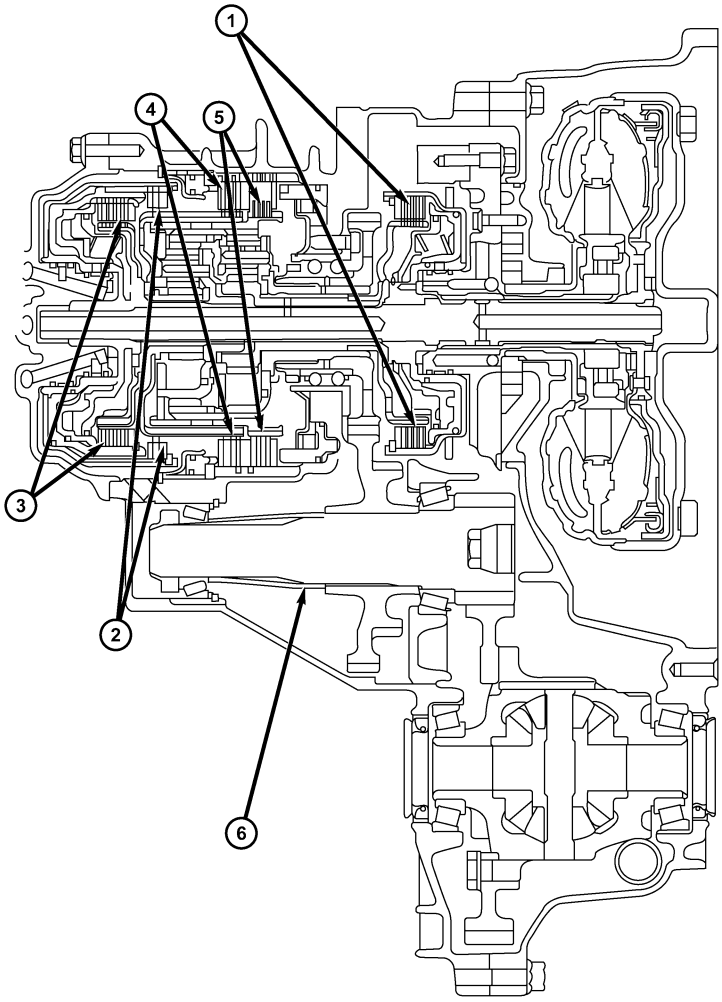

ltsm080158

1 - Low Speed Clutch	4 - Gear 2 Brake
2 - Reverse Gear Clutch	5 - Low/Reverse Gear Brake
3 - Overdrive Clutch	6 - Output Shaft/Transfer Case Driven Gear

Downloaded from www.Manualslib.com manuals search engine

Operation

The transaxle control is divided into the electronic and hydraulic transaxle control functions. While the electronic transaxle control is responsible for gear selection and for matching the pressures to the torque to be transmitted, the transaxle's power supply control occurs via hydraulic elements in the electro-hydraulic control module. The fluid supply to the hydraulic elements, such as the torque converter, the shift elements and the hydraulic transaxle control, is provided by way of a fluid pump connected to the torque converter.

The Transaxle Control Module (TCM) allows for the precise adaptation of pressures to the corresponding operating conditions and to the engine output during the gearshift phase, resulting in a noticeable improvement in shift quality. The engine speed limit can be reached in the individual gears at full throttle and kickdown. The shift range can be changed in the forward gears while driving, but the TCM employs a downshift safeguard to prevent engine over speed. The system offers the additional advantage of flexible adaptation to different vehicle and engine variants.

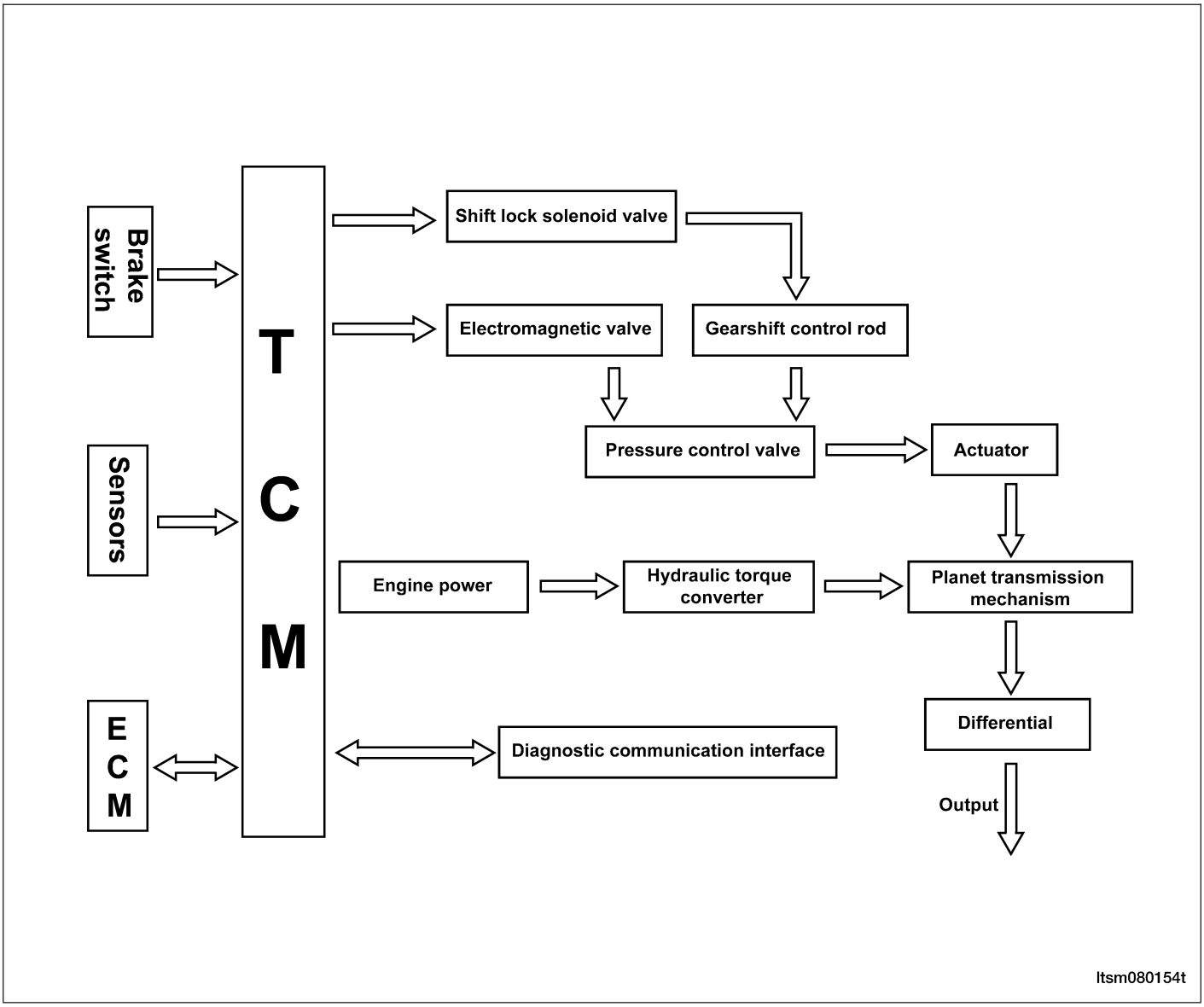

Downloaded from www.Manualslib.com manuals search engine

Transaxle Hydraulic Schematics

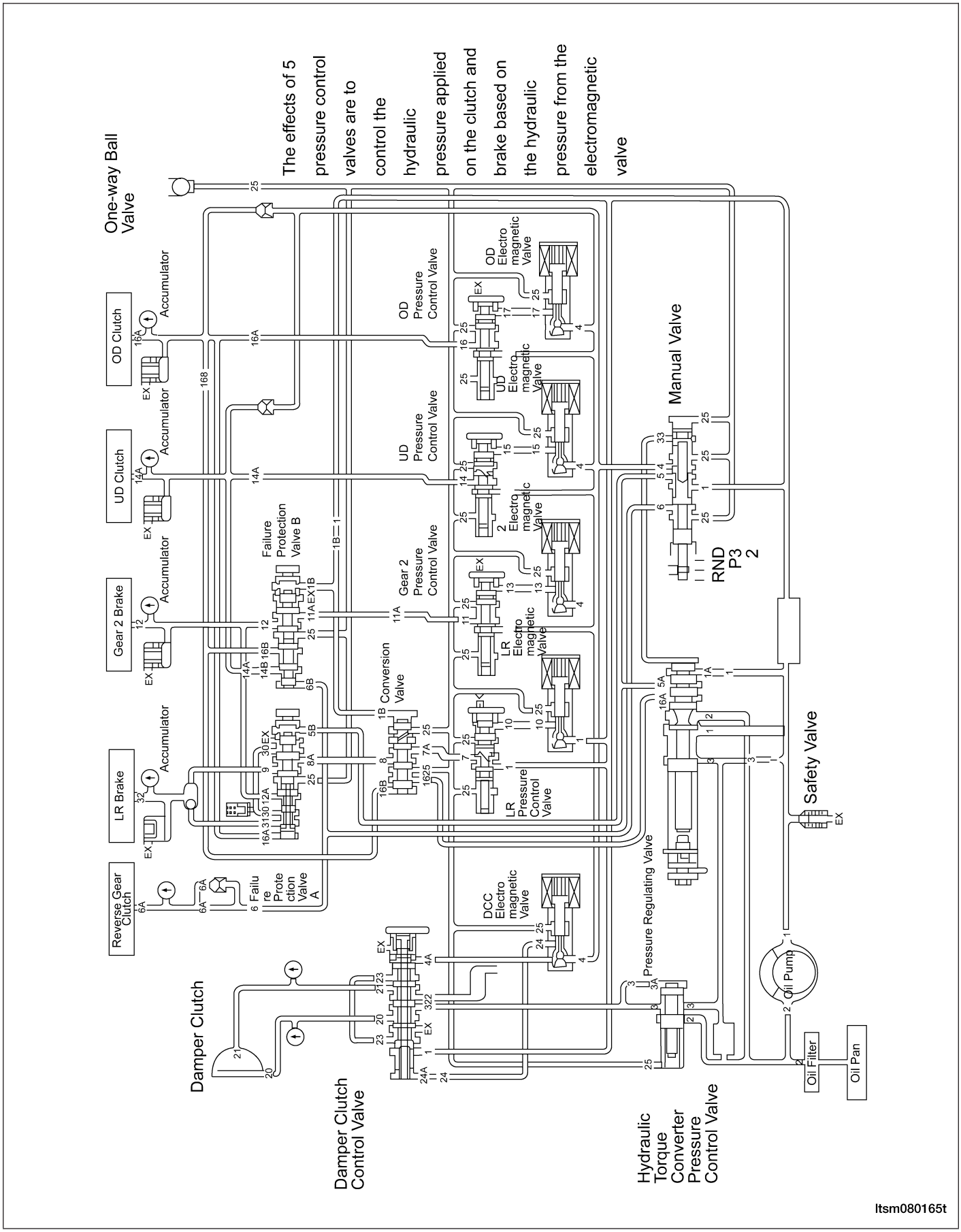

Downloaded from www.Manualslib.com manuals search engine

Specifications

Related Operating Components

GEARSHIFT LEVER POSITION		GEAR RATIO	ENGINE START	PARKING MECHANISM	DRIVE			LOCK		
					LOW SPEED CLUTCH (UD)	REVERSE GEAR CLUTCH (REV)	OVERSPEED CLUTCH (OD)	LOW GEAR/ REVERSE GEAR BRAKE (LR)	GEAR BRAKE (2ND)	ONE-WAY CLUTCH (OWC)
P	Parking	-	Enabled	X	-	-	-	X	-	-
R	Reverse Gear	2.480	-	-	-	X	-	X	-	-
N	Neutral Gear	-	Enabled	-	-	-	-	X	-	-
D	Gear 1	2.842	-	-	X	-	-	X*	-	X
	Gear 2	1.529	-	-	X	-	-	-	X	-
	Gear 3	1.000	-	-	X	-	X	-	-	-
	Gear 4	0.712	-	-	-	-	X	-	X	-
3	Gear 1	2.842	-	-	X	-	-	X*	-	X
	Gear 2	1.529	-	-	X	-	-	-	X	-
	Gear 3	1.000	-	-	X	-	X	-	-	-
2	Gear 1	2.842	-	-	X	-	-	X*	-	X
	Gear 2	1.529	-	-	X	-	-	-	X	-
L	Gear 1	2.842	-	-	X	-	-	X	-	-

*Low gear/reverse gear is applied when vehicle speed is lower than 10 km/h. X = Operating Components

Lubrication Specifications

DESCRIPTION	ITEM
Transaxle Fluid Quantity	6.5L
Fluid Type	DEXTRON III
Fluid Change Cycle	40000 Km or 3 years

Downloaded from www.Manualslib.com manuals search engine

Special Tools

Torque Wrench Socket MB-990607	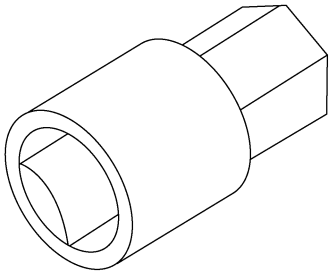 ltsm080172
Special Socket (41) MB-991625	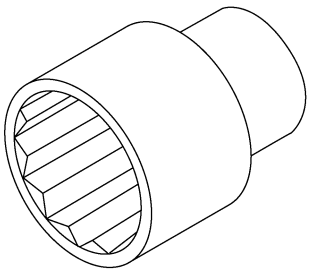 ltsm080173
Diagnostic Scan Tool X-431	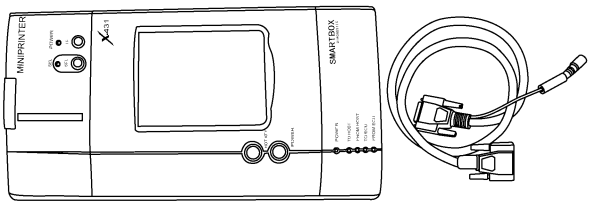 besm030001
Fluid Pressure Gauge Connector MB-998332	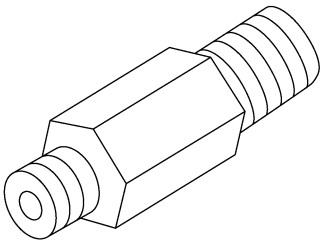 ltsm080170

Downloaded from www.Manualslib.com manuals search engine

Fluid Pressure Gauge Connector MB-998900	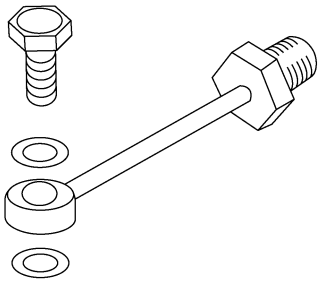 ltsm080171
Spring Compressor MB-991625	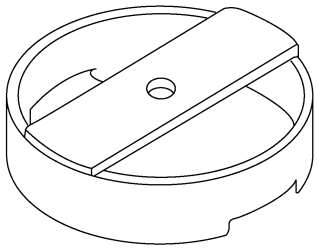 ltsm080174
Clearance Measurer MB-991631	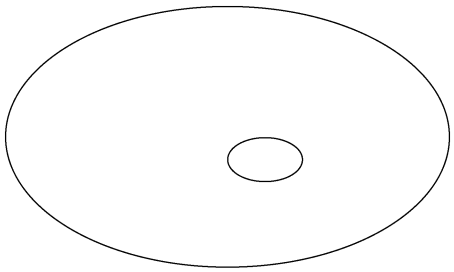 ltsm080175
Fluid Pump Dismounter MB-998333	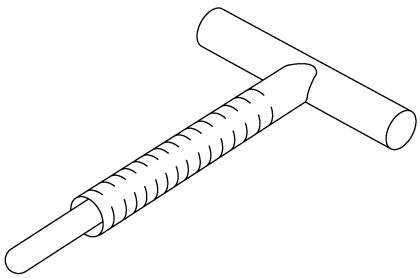 ltsm080176

Downloaded from www.Manualslib.com manuals search engine

Bearing Fixer MB-998350	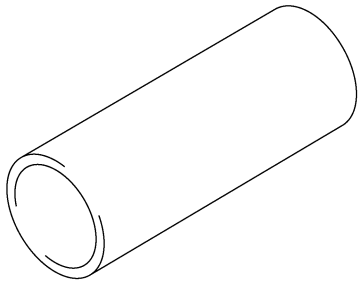 ltsm080177
Guide Rod MB-998412	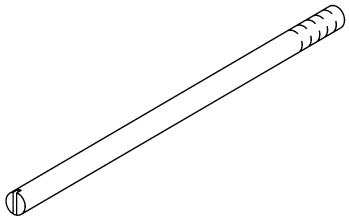 ltsm080178
Spring Compressor MB-998907	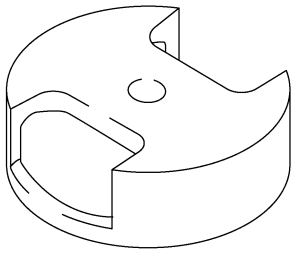 ltsm080179

Downloaded from www.Manualslib.com manuals search engine

Automatic Transaxle Fluid Pressure Gauge	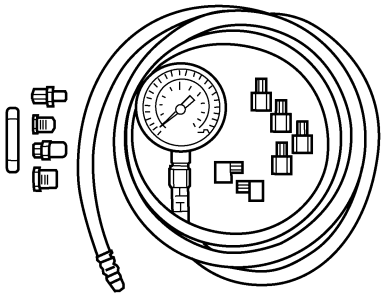 besm080059
Digital Multimeter Fluke 15B & 17B	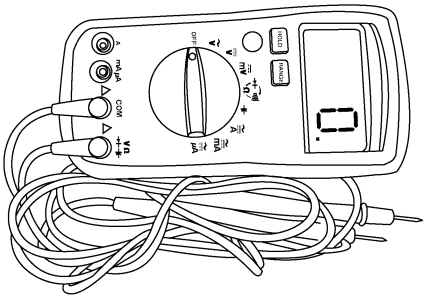 besm030002

Downloaded from www.Manualslib.com manuals search engine

Electrical Schematics

Automatic Transaxle (Page 1 of 5)

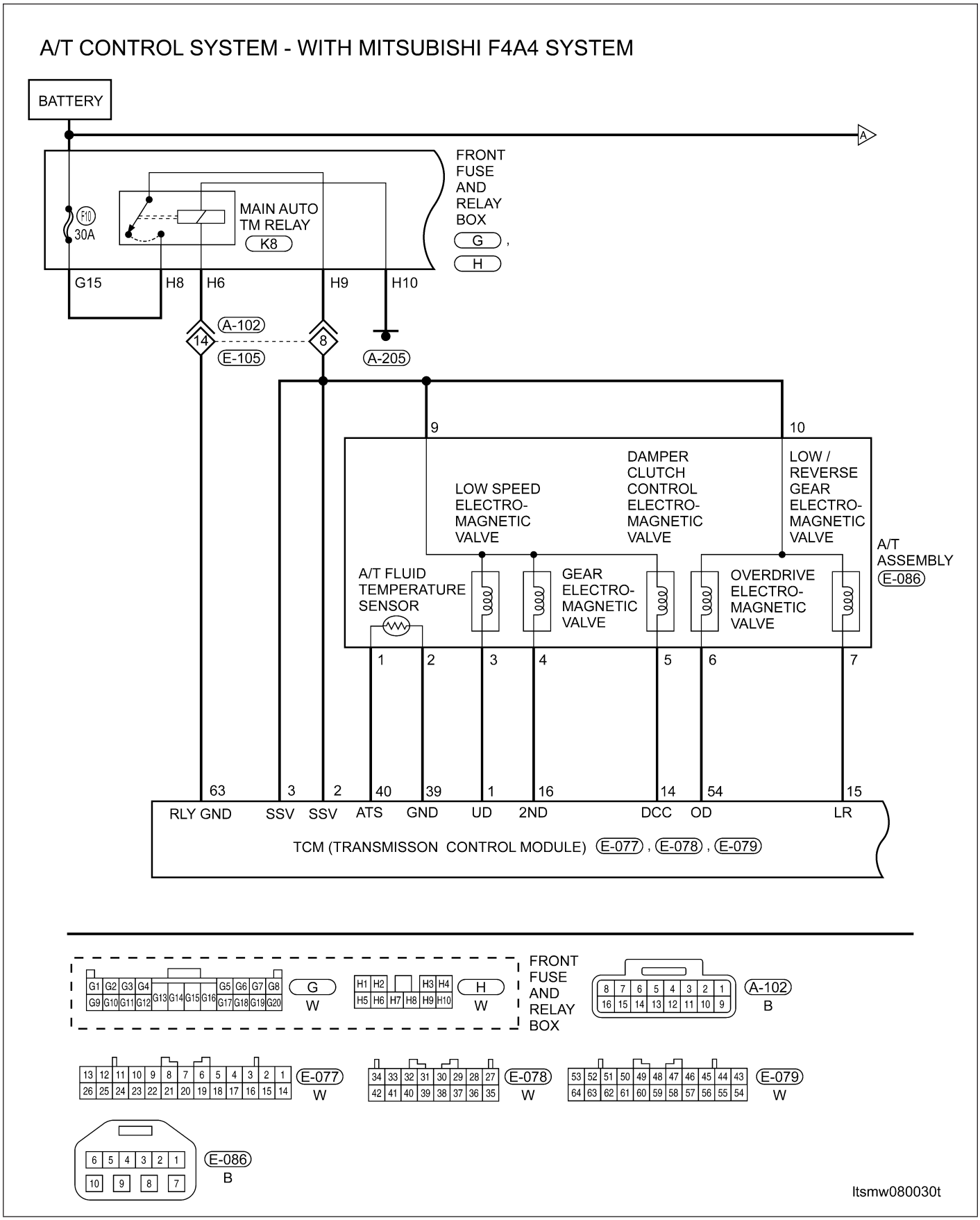

Downloaded from www.Manualslib.com manuals search engine

Automatic Transaxle (Page 2 of 5)

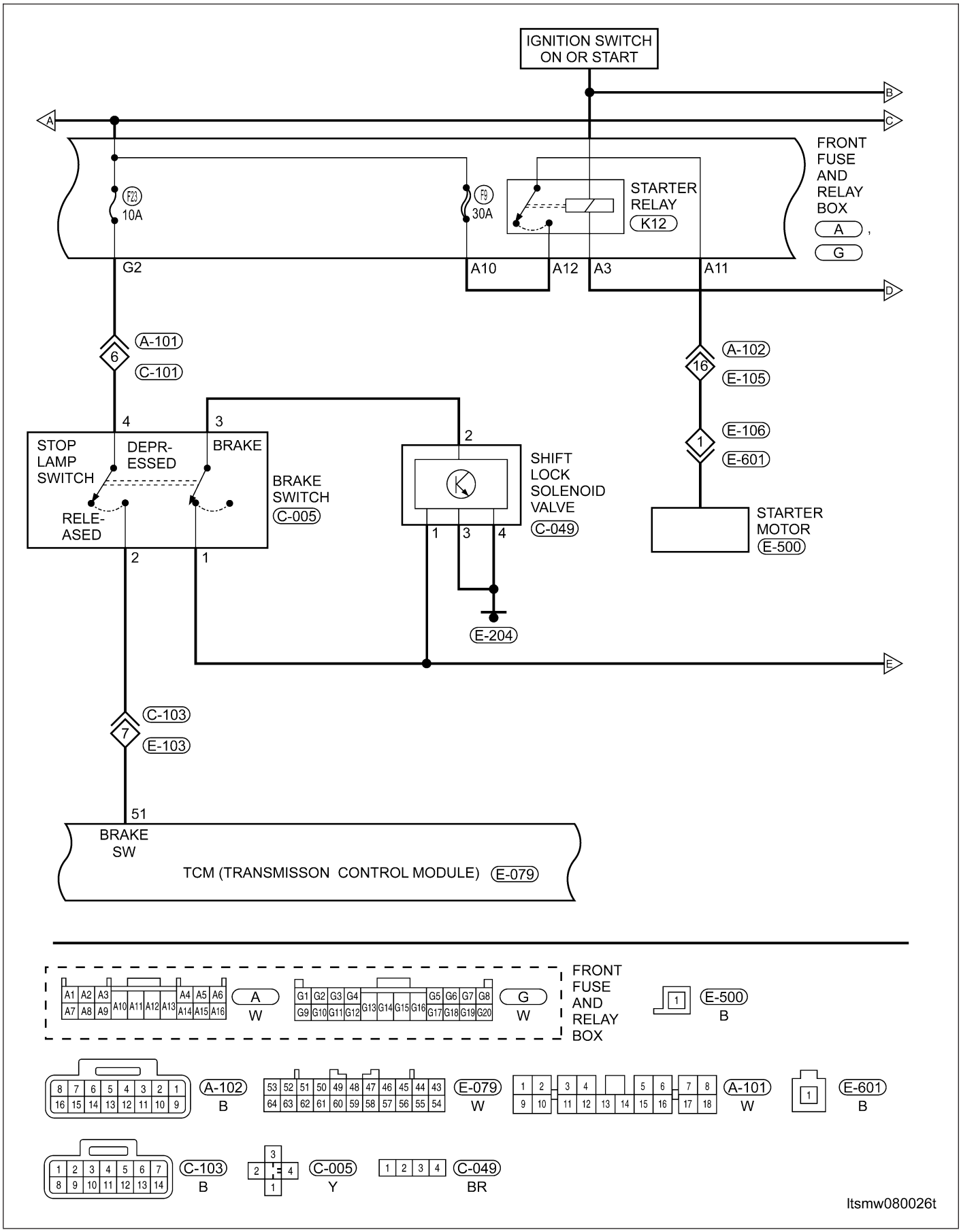

Downloaded from www.Manualslib.com manuals search engine

Automatic Transaxle (Page 3 of 5)

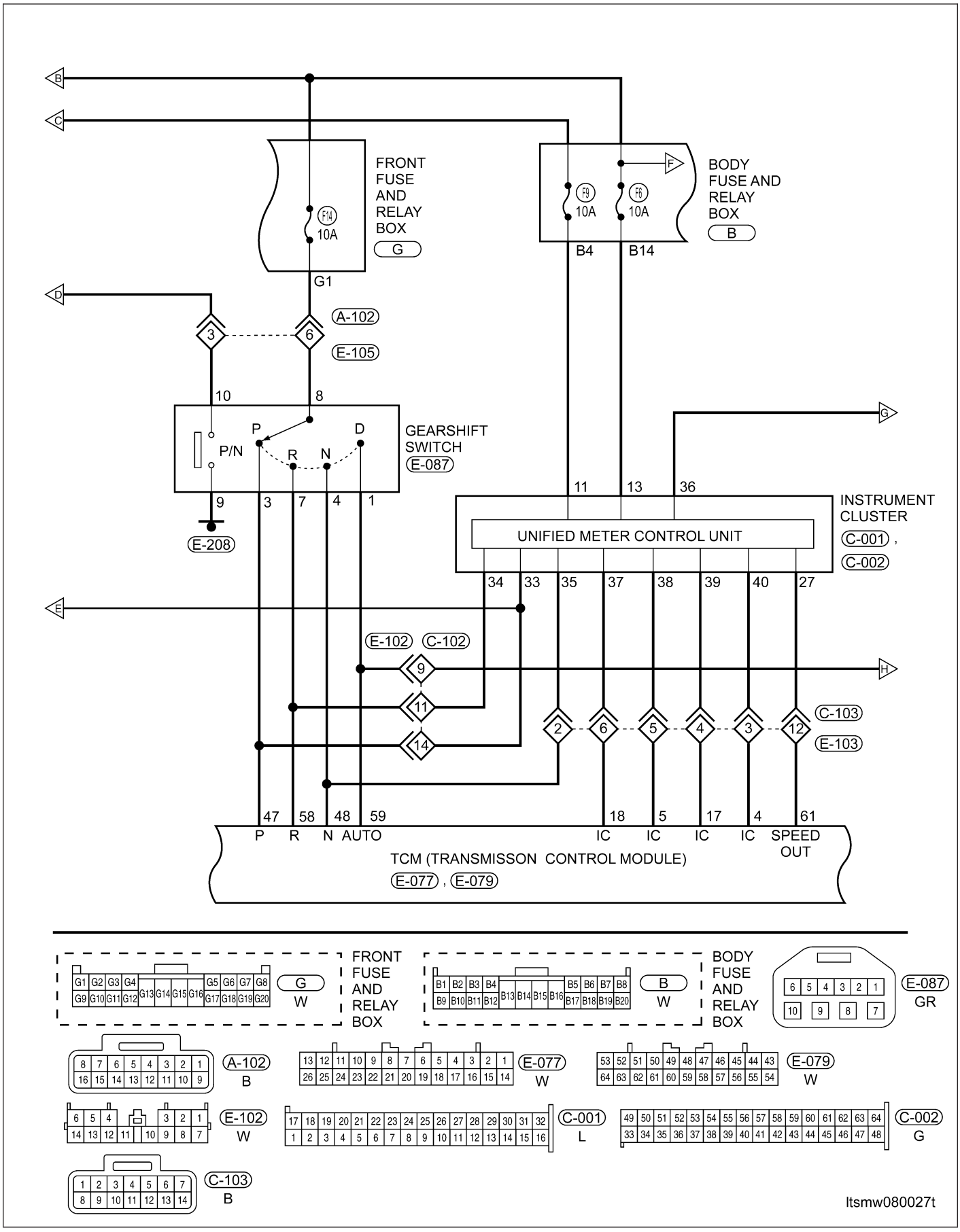

Downloaded from www.Manualslib.com manuals search engine

Automatic Transaxle (Page 4 of 5)

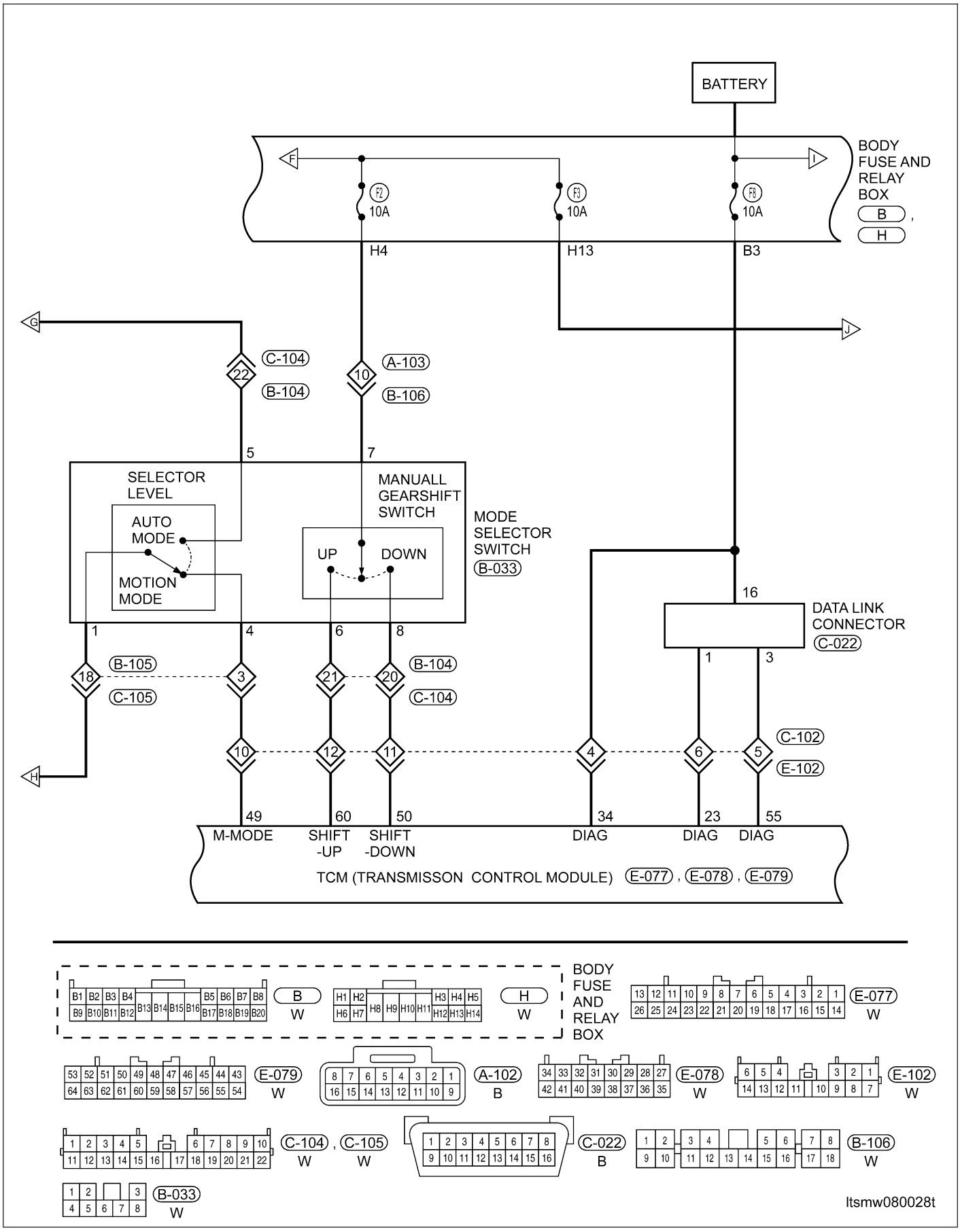

Downloaded from www.Manualslib.com manuals search engine

Automatic Transaxle (Page 5 of 5)

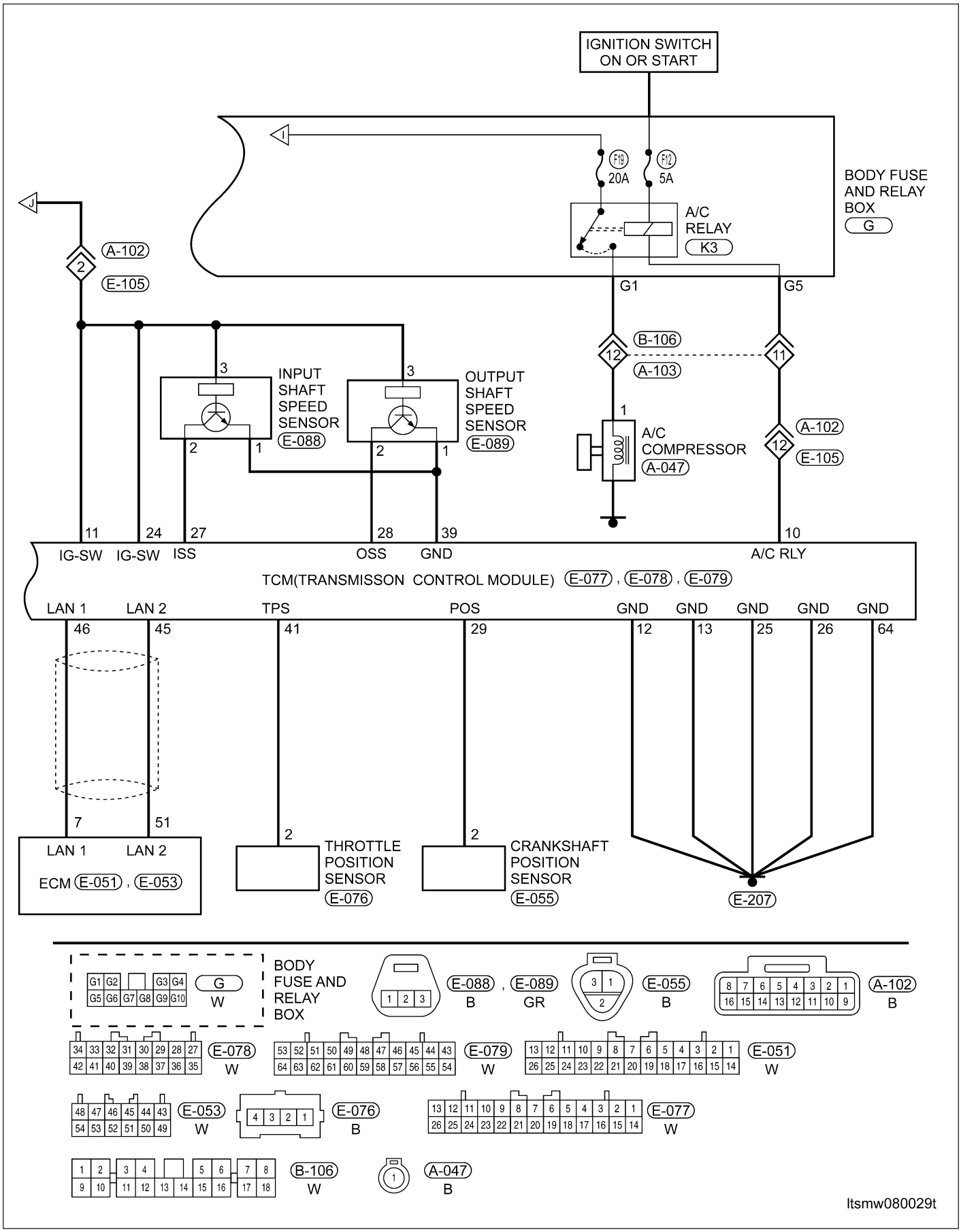

Downloaded from www.Manualslib.com manuals search engine

Transaxle Control Module (TCM) Connector Pin-Out Table

TCM PIN-OUT TABLE

PIN	CIRCUIT IDENTIFICATION	PIN	CIRCUIT IDENTIFICATION
1	Low Speed Electromagnetic Valve	33	-
2	Relay Supply	34	Data Link Connector
3	Relay Supply	35	-
4	To Instrument Cluster	36	-
5	To Instrument Cluster	37	-
6	-	38	-
7	-	39	GND
8	-	40	TFT Sensor
9	-	41	TPS
10	A/C Relay Control	42	-
11	Ignition Supply	43	-
12	GND	44	-
13	GND	45	To ECM
14	Damper Clutch Control Electromagnetic Valve	46	To ECM
15	Low/Reverse Gear Electromagnetic Valve	47	Manual Gearshift Proof Switch ″P″
16	Gear Electromagnetic Valve	48	Manual Gearshift Proof Switch ″N″
17	To Instrument Cluster	49	Shifter Selector-Motion Vehicle Mode ″AUTO″
18	To Instrument Cluster	50	Shifter Selector-Gearshift Switch ″UP″
19	-	51	Brake Switch
20	-	52	-
21	-	53	-
22	-	54	Overdrive Electromagnetic Valve
23	Data Link Connector	55	Data Link Connector
24	Ignition Supply	56	-
25	GND	57	-
26	GND	58	Manual Gearshift Proof Switch ″R″
27	Input Shaft Speed Sensor	59	Manual Gearshift Proof Switch ″D″
28	Output Shaft Speed Sensor	60	Shifter Selector-Gearshift Switch ″DOWN″
29	Crankshaft Position Sensor	61	To Instrument Cluster
30	-	62	-
31	-	63	Main Auto TM Relay Control
32	-	64	GND

Downloaded from www.Manualslib.com manuals search engine

DIAGNOSIS & TESTING

Diagnostic Help

1. Confirm that the malfunction is current and carry-out the diagnostic tests and repair procedures.
2. If the DTC cannot be deleted, it is a current fault.
3. Use a digital multimeter to perform voltage readings on the transaxle electronic system.
4. The scan tool connects to the Data Link Connector (DLC) and communicates with the Transaxle Control Module (TCM) over the CAN data circuit.
5. If the failure is intermittent, perform the following:
   - Check for loose connectors.
   - Look for any chafed, pierced, pinched, or partially broken wires.
   - Monitor the scan tool data relative to this circuit and wiggle test the wiring and connectors.
   - Look for the data to change or for the DTC to reset during the wiggle test.
   - Look for broken, bent, pushed out or corroded terminals.
   - Inspect the sensor and mounting area for any condition that would result in an incorrect signal, such as damage or foreign material.
6. Remove the TCM from the troubled vehicle and install in a new vehicle and test. If the DTC cannot be deleted, the TCM is malfunctioning. If the DTC can be deleted, return the TCM to the original vehicle.

Diagnostic Tools

Diagnostic Scan Tool X-431

Read the following when connecting the X-431 scan tool:
- Connect the scan tool to the Data Link Connector (DLC) for communication with the vehicle.
- The DLC is located on the driver side compartment under the steering column (it is attached to the instrument panel and accessible from the driver seat).
- The DLC is rectangular in design and capable of accommodating up to 16 terminals.
- The electrical connector has keying features to allow easy connection.

TCM Electrical Harness Test Tool

If using a TCM electrical harness test tool, you can diagnose the TCM harness while the TCM is still connected.
- Measure sensor and solenoid resistance (always measure resistance with the power off).
- Measure the signal voltage of the TCM (always measure voltage with the power on).

NOTE :
Using the TCM electrical harness test tool will help prevent electrical connector terminal damage.

Downloaded from www.Manualslib.com manuals search engine

Diagnostic Trouble Code (DTC) List

F4A4 Automatic Transaxle DTC List

DTC	DTC DEFINITION
11	TPS Short Circuit
12	TPS Open Circuit
14	TPS Abnormal Adjustment
15	TFT Sensor Open Circuit
21	CKP Sensor Malfunction
22	Input Speed Sensor
23	Output Speed Sensor Fault
26	Brake Pedal Position Switch Circuit Malfunction
29	Vehicle Speed Sensor Malfunction
31	Reverse/Low Solenoid Malfunction
32	UD Solenoid Open
33	2 Gear Solenoid Open Circuit
34	Overdrive Solenoid Circuit Malfunction
36	Damper Clutch System Control Solenoid Malfunction
41	First Gear, Ration Out Of Limits
42	Second Gear, Ration Out Of Limits
43	Third Gear, Ration Out Of Limits
44	Fourth Gear, Ration Out Of Limits
46	Reverse Gear, Ration Out Of Limits
51	CAN Data Bus Interface Malfunction
52	DCC Digital Command System Malfunction
54	Electrical Relay Open Circuit
56	Neutral Indicator Lamp Open Circuit ″

Downloaded from www.Manualslib.com manuals search engine

Diagnostic Trouble Code (DTC) Tests

15 - TFT Sensor Open Circuit

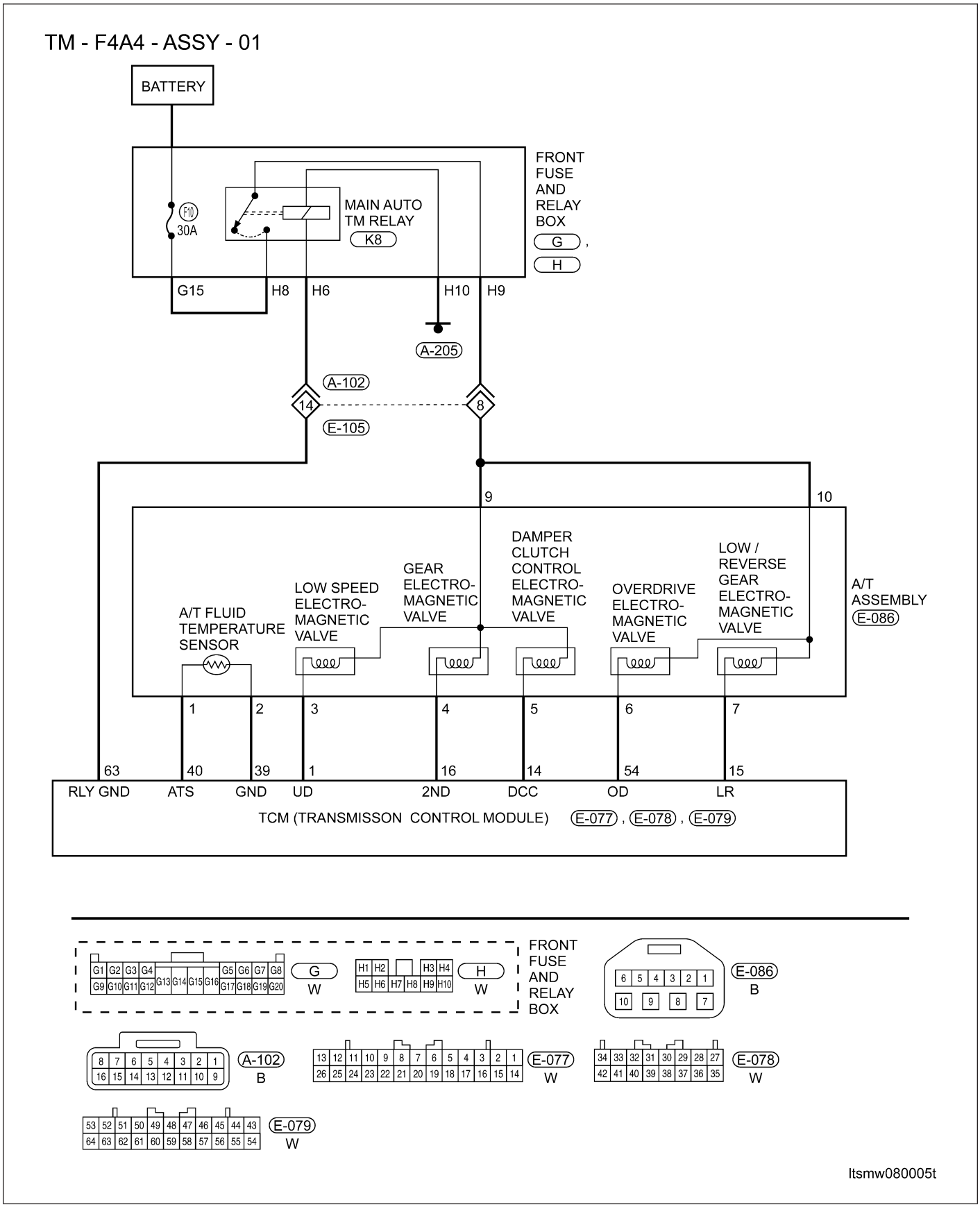

Downloaded from www.Manualslib.com manuals search engine

On Board Diagnostic Logic

- Self-diagnosis detection logic.

DTC NO.	DTC DEFINITION	DTC DETECTION CONDITION	DTC SET CONDITION	POSSIBLE CAUSES
15	TFT sensor open circuit	Vehicle is driving	The Transaxle Control Module (TCM) will set this DTC when the TCM received voltage signal is more than 2.6 V form the sensor after the vehicle has driven for 10 minutes.	• TFT sensor • Harness or connectors (The sensor circuit is open or shorted) • TCM

DTC Confirmation Procedure:

Before performing the following procedure, confirm that battery voltage is more than 12 V.

- Turn ignition switch off.
- Connect the X-431 scan tool to the Data Link Connector (DLC) - use the most current software available.
- Turn ignition switch on, with the scan tool, view and erase stored DTCs in the TCM.
- Start the engine and warm it to normal operating temperature.
- Drive the vehicle up to 10 km/h or more.
- With the scan tool, select view DTC and data stream.
- If the DTC is detected, the DTC condition is current. Go to Diagnostic Procedure - Step 1.
- If the DTC is not detected, the DTC condition is intermittent (See Diagnostic Help and Intermittent DTC Troubleshooting in Section 08 Transaxle & Transfer Case for more information).

NOTE :
While performing electrical diagnosis & testing, always refer to the electrical schematics for specific circuit and component information.

Diagnostic Procedure

1. CHECK TFT SENSOR RESISTANCE

- Turn ignition switch off.
- Disconnect A/T assembly connector E-086.
- Check TFT resistance between the TFT sensor terminals:

SENSOR	CONNECTOR	TERMINAL	TEMPERATURE	RESISTANCE KΩ
A/T sensor	E-086	1 - 2	0°C	16.7 - 20.5
			20°C	7.3 - 8.9
			40°C	3.4 - 4.2
			60°C	1.9 - 2.1
			80°C	1.0 - 1.2
			110°C	0.57 - 0.69

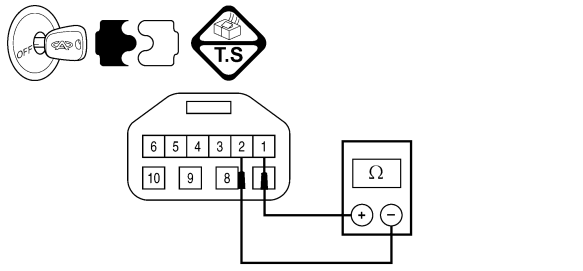

Is the check result normal?

Yes >> Go to the next step.

No >> Replace the TFT sensor.

Downloaded from www.Manualslib.com manuals search engine

2. CHECK TFT SENSOR HARNESS

- Disconnect TCM connector.
- Check for continuity between the following A/T assembly terminals and TCM terminals:

A/T ASSEMBLY CONNECTOR TERMINAL	TCM CONNECTOR TERMINAL	CONTINUITY
1	40	Yes
2	39	Yes

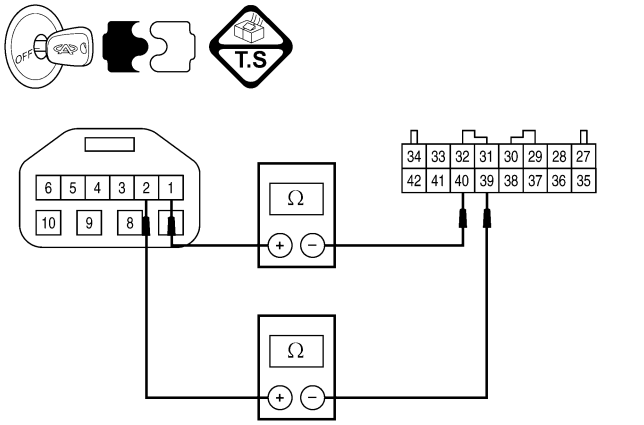

- Check the harness for short to power and short to ground.

Is the check result normal?

Yes >> Go to the next step.

No >> Repair or replace the open circuit or short to power or short to ground.

3. CHECK TCM POWER SUPPLY AND GROUND CIRCUIT

- Check TCM power supply and ground circuit.
- Reinstall any removed parts.

Is the check result normal?

Yes >> Go to the next step.

No >> Repair or replace damaged parts.

4. CHECK DTC

- With the X-431 scan tool, read TCM DTCs.
- Refer to ″DTC Confirmation Procedure″.

Is DTC 15 still present?

Yes >> Replace the TCM.

No >> The system is now operating properly.
Reassemble the vehicle and road test to verify the customers complaint is repaired.

Downloaded from www.Manualslib.com manuals search engine

22 - Input Speed Sensor

TM - F4A4 - ISS - 01

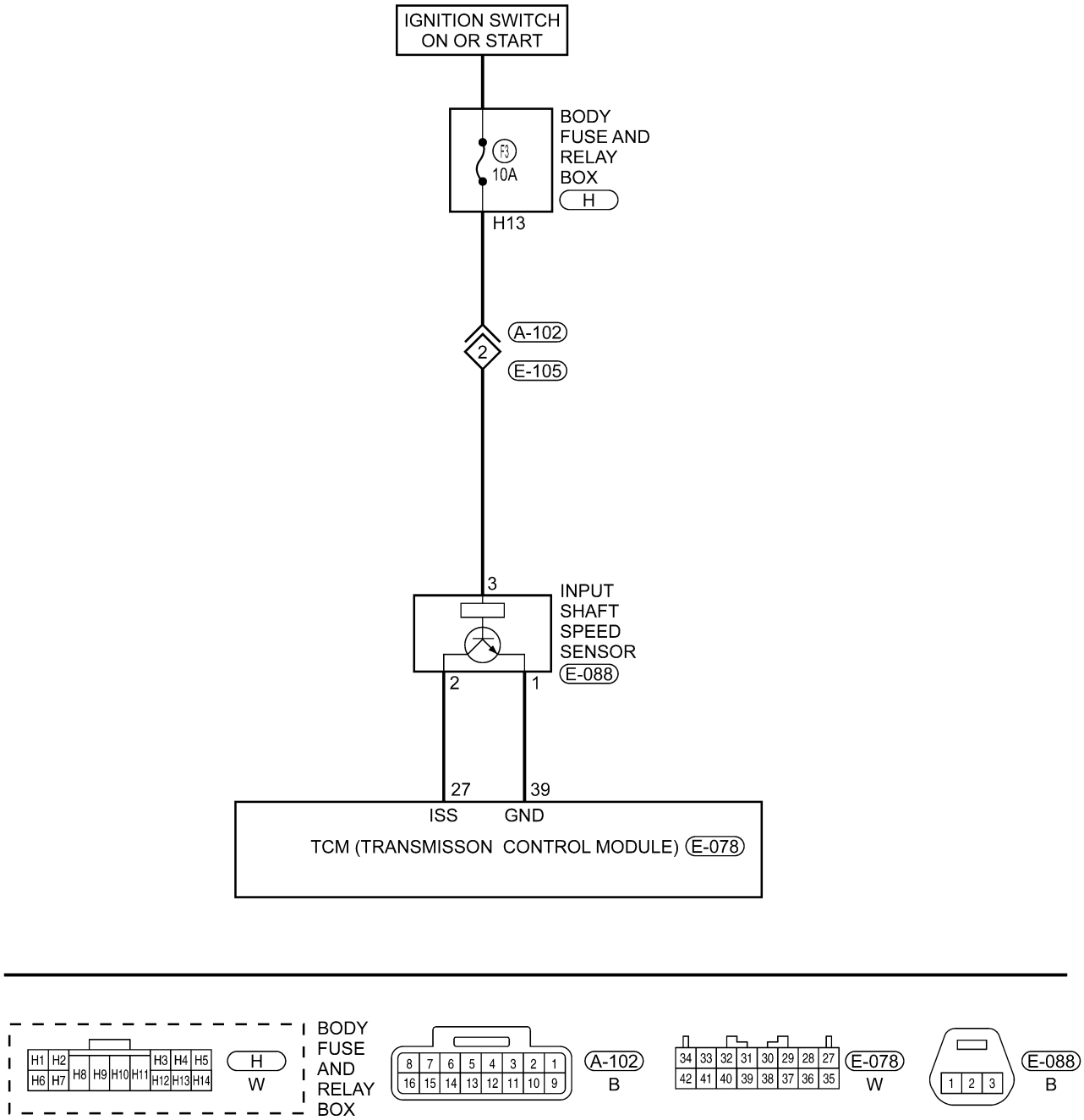

ltsmw080006t

Downloaded from www.Manualslib.com manuals search engine

On Board Diagnostic Logic

- Self-diagnosis detection logic.

DTC NO.	DTC DEFINITION	DTC DETECTION CONDITION	DTC SET CONDITION	POSSIBLE CAUSES
22	Input speed sensor	Vehicle is driving	• The Transaxle Control Module (TCM) will set this DTC when the TCM didn't received pulse signal from the input shaft speed sensor for above 1 seconds when the vehicle is driving for 30 km/h at 3 or 4 gear. • If the DTC was set for 4 times, then the A/T will be locked in 3rd gear (D gear) or shifted to low gear when in sports mode.	• Input shaft speed sensor • The retainer of deceleration clutch • Harness or connectors (The sensor circuit is open or shorted) • TCM

DTC Confirmation Procedure:

Before performing the following procedure, confirm that battery voltage is more than 12 V.

- Turn ignition switch off.
- Connect the X-431 scan tool to the Data Link Connector (DLC) - use the most current software available.
- Turn ignition switch on, with the scan tool, view and erase stored DTCs in the TCM.
- Start the engine and warm it to normal operating temperature.
- Drive the vehicle up to 10 km/h or more.
- With the scan tool, select view DTC and data stream.
- If the DTC is detected, the DTC condition is current. Go to Diagnostic Procedure - Step 1.
- If the DTC is not detected, the DTC condition is intermittent (See Diagnostic Help and Intermittent DTC Troubleshooting in Section 08 Transaxle & Transfer Case for more information).

NOTE :

While performing electrical diagnosis & testing, always refer to the electrical schematics for specific circuit and component information.

Downloaded from www.Manualslib.com manuals search engine

Diagnostic Procedure

1. CHECK A/T INPUT SIGNAL

- With the scan tool, select view DTC and data stream for A/T.
- Vehicle start and read out the value of "INPUT SPEED SENSOR".

ITEM	CONDITION	DISPLAY VALUE
Input speed sensor	During driving (lock-up ON)	Approximately matches the engine speed.

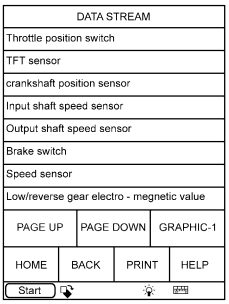

ltsmd080001t

Is the check result normal?

Yes >> The condition that caused this DTC is intermittent (See Diagnostic Help in Section 08 Transaxle & Transfer Case).

No >> Go to the next step.

2. CHECK INPUT SHAFT SPEED SENSOR POWER SUPPLY

- Stop the vehicle and turn ignition switch off.
- Disconnect input shaft speed sensor electrical connector.
- Turn the ignition switch on.
- Check sensor power supply between sensor terminal 3 and ground in the sensor electrical connector E-088.
- Voltage should be more than 12 V.

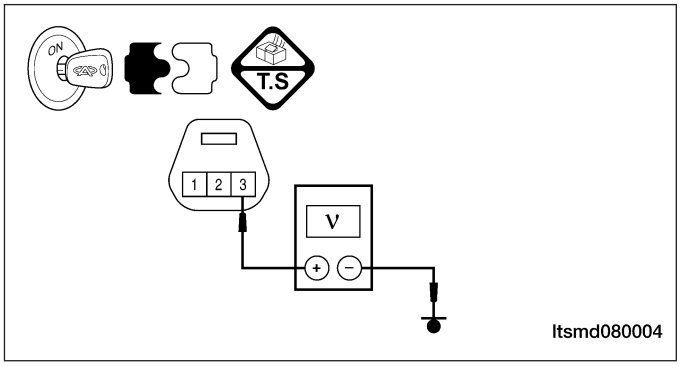

ltsmd080004

Is the check result normal?

Yes >> Go to step 4.

No >> Go to the next step.

Downloaded from www.Manualslib.com manuals search engine

3. DETECT MALFUNCTIONING PART

- Check the following:
  - Harness connectors A-102, E-105
  - Body fuse and relay box H13
  - Fuse 3 (10A)
  - Harness open or short between input shaft speed sensor and fuse

Is the check result normal?

Yes >> Go to the next step.

No >> Repair or replace the open circuit or short to ground or short to power in harness or connectors.

4. CHECK INPUT SHAFT SPEED SENSOR SIGNAL CIRCUIT

- Check sensor signal circuit between sensor terminal 2 and ground in the sensor electrical connector E-088.
- 5 V should exist.

Is the check result normal?

Yes >> Go to the next step.

No >> Repair or replace open circuit or short to power or short to ground.

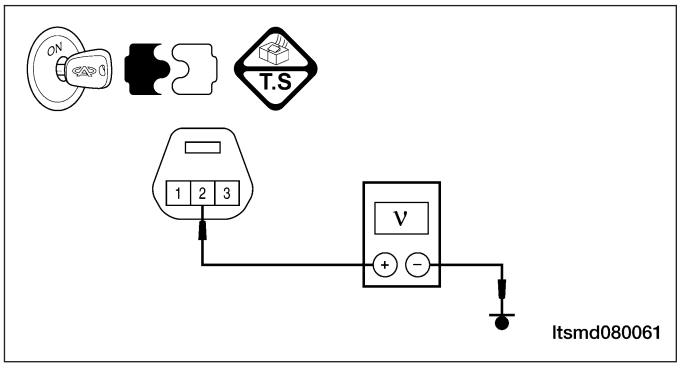

5. CHECK INPUT SHAFT SPEED SENSOR GROUND CIRCUIT

- Turn the ignition switch off.
- Disconnect TCM connector.
- Check for harness continuity between the following terminals:

INPUT SPEED SENSOR CONNECTOR TERMINAL	TCM CONNECTOR TERMINAL	CONTINUITY
1	39	Yes

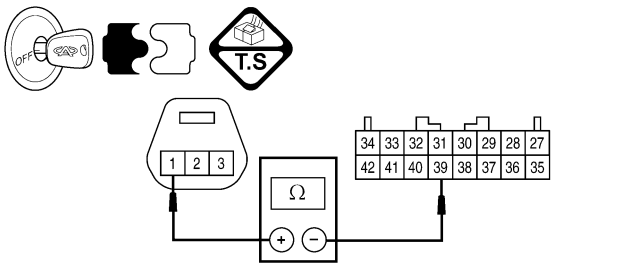

- Check the harness for short to power and short to ground.

Is the check result normal?

Yes >> Go to the next step.

No >> Repair or replace open circuit or short to power or short to ground.

Downloaded from www.Manualslib.com manuals search engine

6. CHECK INPUT SHAFT SPEED SENSOR SIGNAL

- Connect the TCM and sensor electrical connector.
- Start the vehicle and perform the following:
  - Engine: 2000 RPM
  - Vehicle: 50 km/h
  - Gear: 3
- Check sensor signal between sensor terminal 2 and ground in the sensor electrical connector E-088 with the X-431 or oscilloscope.
- Make sure the wave shape is normal and signal voltage is fluctuating from 0 - 5 V.

Is the check result normal?

Yes >> Go to step 9.

No >> Go to the next step.

7. CHECK INPUT SHAFT SPEED SENSOR

- Perform the following:
  - Loosen the bolt of the sensor.
  - Remove the sensor.
  - Visually inspect the sensor for missing or chipped teeth.

Is the check result normal?

Yes >> Replace the input speed sensor.
Monitor the input speed sensor signal on the X-431 or oscilloscope.
- If the input speed sensor signals were normal, the system is OK.
- If the input speed sensor signals were still irregular or missing, go to step 8.

No >> Replace input speed sensor.

8. CHECK THE RETAINER OF DECELERATION CLUTCH

- Disassemble and inspect the A/T and replace the retainer for the deceleration clutch.
- Check for a chipped and damaged signal retainer for the deceleration clutch.

Is the check result normal?

Yes >> Go to the next step.

No >> Replace the retainer for the deceleration clutch.
Monitor the input speed sensor signal on the X-431 or oscilloscope.
If the signal pulse is not normal, repair the noise interference.

9. CHECK DTC

- With the X-431 scan tool, read TCM DTCs.
- Refer to ″DTC Confirmation Procedure″.

Is the check result normal?

Yes >> The system is now operating properly.
Reassemble the vehicle and road test to verify the customers complaint is repaired.

No >> Replace the TCM.

Downloaded from www.Manualslib.com manuals search engine

23 - Output Speed Sensor Fault

TM - F4A4 - OSS - 01

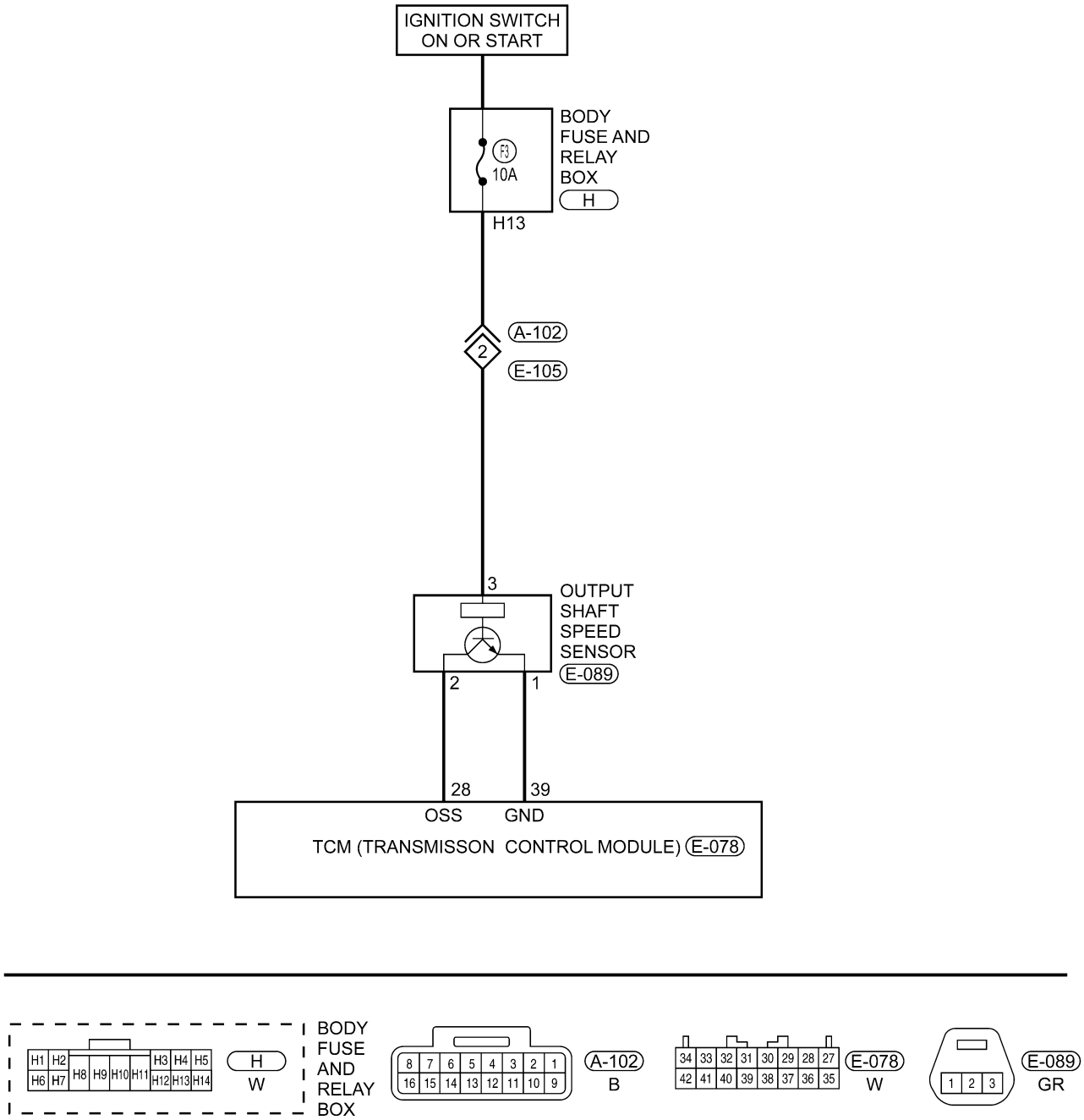

ltsmw080007t

Downloaded from www.Manualslib.com manuals search engine

On Board Diagnostic Logic

- Self-diagnosis detection logic.

DTC NO.	DTC DEFINITION	DTC DETECTION CONDITION	DTC SET CONDITION	POSSIBLE CAUSE
23	Output speed sensor	Vehicle is driving	• The Transaxle Control Module (TCM) will set this DTC when the TCM didn't received pulse signal from the output shaft speed sensor for above 1 seconds when the vehicle is driving for 30 km/h at 3 or 4 gear. • If the DTC was set for 4 times, then the A/T will be locked in 3rd gear (D gear) or shifted to low gear when in sports mode.	• Output shaft speed sensor • Harness or connectors (The sensor circuit is open or shorted) • Transfer case driven and drive gear • TCM

DTC Confirmation Procedure:

Before performing the following procedure, confirm that battery voltage is more than 12 V.

- Turn ignition switch off.
- Connect the X-431 scan tool to the Data Link Connector (DLC) - use the most current software available.
- Turn ignition switch on, with the scan tool, view and erase stored DTCs in the TCM.
- Start engine and warm it to normal operating temperature, then select ″D″ position.
- Drive the vehicle up to 30 km/h or more at 3 or 4 gear.
- Driving the vehicle uphill will help maintain the driving conditions required for this test.
- With the scan tool, select view DTC and data stream.
- If the DTC is detected, the DTC condition is current. Go to Diagnostic Procedure - Step 1.
- If the DTC is not detected, the DTC condition is intermittent (See Diagnostic Help and Intermittent DTC Troubleshooting in Section 08 Transaxle & Transfer Case for more information).

NOTE :

While performing electrical diagnosis & testing, always refer to the electrical schematics for specific circuit and component information.

Downloaded from www.Manualslib.com manuals search engine

Diagnostic Procedure

1. CHECK A/T OUTPUT SIGNAL

- With the scan tool, select view DTC and data stream for A/T.
- Vehicle start and read out the value of ″OUTPUT SPEED SENSOR″.

ITEM	CONDITION	DISPLAY VALUE
Output speed sensor	During driving	Approximately matches the speedometer reading.

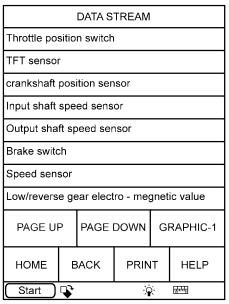

ltsmd080001t

Is the check result normal?

Yes >> The condition that caused this DTC is intermittent (See Diagnostic Help in Section 08 Transaxle & Transfer Case).

No >> Go to the next step.

2. CHECK OUTPUT SHAFT SPEED SENSOR POWER SUPPLY

- Stop vehicle and turn ignition switch off.
- Disconnect output shaft speed sensor connector.
- Turn ignition switch on.
- Check sensor power supply between sensor terminal 3 and ground in the sensor electrical connector E-089.
- Voltage should be more than 12 V.

Is the check result normal?

Yes >> Go to step 4.

No >> Go to the next step.

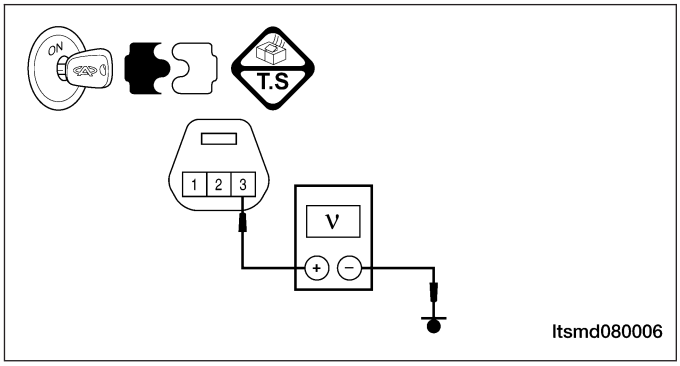

ltsmd080006

Downloaded from www.Manualslib.com manuals search engine

3. DETECT MALFUNCTIONING PART

- Check the following:
  - Harness connectors A-102, E-105
  - Body fuse and relay box H13
  - Fuse 3 (10A)
  - Harness for an open or short between output shaft speed sensor and fuse

Is the check result normal?

Yes >> Go to the next step.

No >> Repair or replace the open circuit or short to ground or short to power in harness or connectors.

4. CHECK OUTPUT SHAFT SPEED SENSOR SIGNAL CIRCUIT

- Check sensor signal circuit between sensor terminal 2 and ground in the sensor electrical connector E-088.
- 5 V should exist.

Is the check result normal?

Yes >> Go to the next step.

No >> Repair or replace the open circuit or short to power or short to ground.

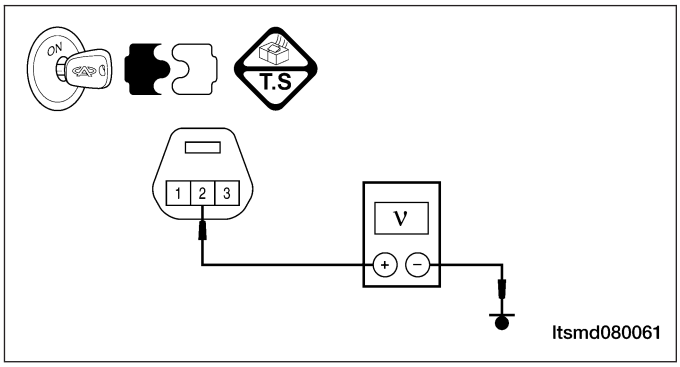

5. CHECK OUTPUT SHAFT SPEED SENSOR GROUND CIRCUIT

- Turn ignition switch off.
- Disconnect TCM connector.
- Check for harness continuity between the following terminals:

OUTPUT SPEED SENSOR CONNECTOR TERMINAL	TCM CONNECTOR TERMINAL	CONTINUITY
1	39	Yes

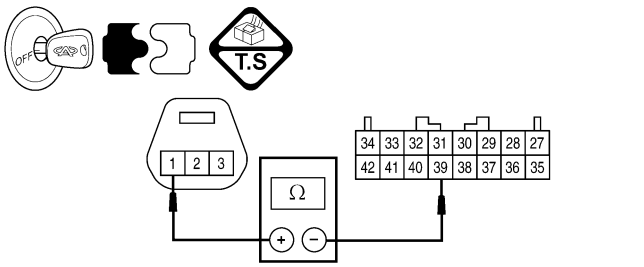

- Check the harness for short to power and short to ground.

Is the check result normal?

Yes >> Go to the next step.

No >> Repair or replace circuit for an open or short to power or short to ground.

Downloaded from www.Manualslib.com manuals search engine

6. CHECK OUTPUT SHAFT SPEED SENSOR SIGNAL

- Connect TCM and sensor connector.
- Start the vehicle and perform the following:
  - Engine: 2000 RPM
  - Vehicle: 50 km/h
  - Gear: 3
- Check sensor signal between sensor terminal 2 and ground in the sensor electrical connector E-089 with X-431 or oscilloscope.
- Make sure the wave shape is normal and signal voltage is fluctuating from 0-5 V.

Is the check result normal?

Yes >> Go to step 9.

No >> Go to the next step.

7. CHECK OUTPUT SHAFT SPEED SENSOR

- Perform the following:
  - Loose the bolt of the sensor.
  - Remove the sensor.
  - Visually inspect the sensor for missing or chipped teeth.

TERMINAL NO.	RESISTANCE Ω (25°C)
1 - 2	Except 0 or ∞
1 - 3	
2 - 3	

Is the check result normal?

Yes >> Replace the output speed sensor with a known good one.
Monitor the output speed sensor signal on the X-431 or oscilloscope.
- If the output speed sensor signals were normal, the system is OK.
- If the output speed sensor signals were still irregular or missing, go to step 8.

No >> Replace output speed sensor.

8. CHECK TRANSFER CASE DRIVEN GEAR AND DRIVE GEAR

- Disassemble and repair the A/T and replace or repair the transfer case driven gear and drive gear.
- Check for a chipped and damaged signal gear of the transfer case driven and drive gear.

Is the check result normal?

Yes >> Go to the next step.

No >> Replace or repair the transfer case driven gear and drive gear.
Monitor the output speed sensor signal on the X-431 or oscilloscope.
If the signal pulse is not normal, repair the noise interference.

Downloaded from www.Manualslib.com manuals search engine

9. CHECK DTC

- With the X-431 scan tool, read TCM DTCs.
- Refer to ″DTC Confirmation Procedure″.

Is DTC 23 still present?

Yes >> Replace the TCM.

No >> The system is now operating properly.
Reassemble the vehicle and road test to verify the customers complaint is repaired.

Downloaded from www.Manualslib.com manuals search engine

26 - Brake Pedal Position Switch Circuit Malfunction

TM - F4A4 - BPS - 01

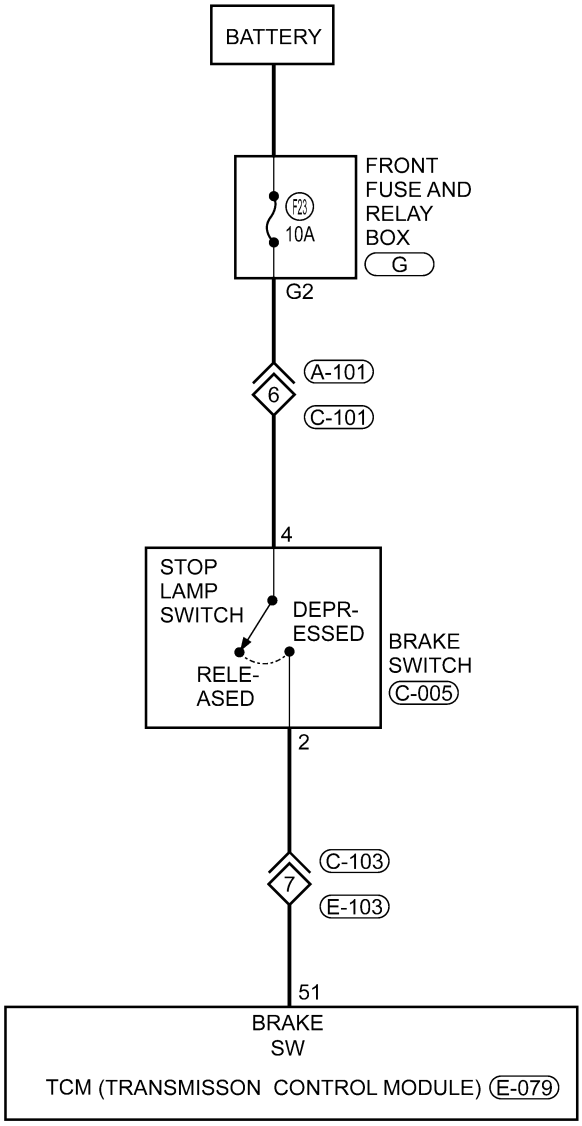

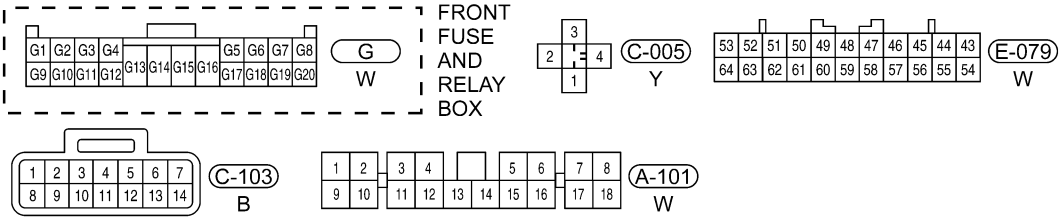

ltsmw080008t

Downloaded from www.Manualslib.com manuals search engine

On Board Diagnostic Logic

- Self-diagnosis detection logic.

DTC NO.	DTC DEFINITION	DTC DETECTION CONDITION	DTC SET CONDITION	POSSIBLE CAUSES
26	Brake pedal position switch circuit malfunction	Vehicle is driving	The brake switch is on while vehicle is driving	• Brake switch • Harness or connectors (The sensor circuit is open or shorted) • TCM

DTC Confirmation Procedure:

Before performing the following procedure, confirm that battery voltage is more than 12 V.

- Connect the X-431 scan tool to the Data Link Connector (DLC) - use the most current software available.
- After connection, press POWER key to start X-431.
- Turn ignition switch on, with the scan tool, view and erase stored DTCs in the TCM.
- Start engine then select ″D″ position.
- Drive the vehicle.
- With the scan tool, select view DTC and data stream.
- If the DTC is detected, the DTC condition is current. Go to Diagnostic Procedure - Step 1.
- If the DTC is not detected, the DTC condition is intermittent (See Diagnostic Help and Intermittent DTC Troubleshooting in Section 08 Transaxle & Transfer Case for more information).

NOTE :
While performing electrical diagnosis & testing, always refer to the electrical schematics for specific circuit and component information.

Diagnostic Procedure

1. CHECK BRAKE PEDAL POSITION SWITCH SIGNAL

- With the scan tool, select view DTC and data stream for A/T.
- Start vehicle and read out the value of ″STOP LAMP SWITCH″.

ITEM	CONDITION	DISPLAY VALUE
Stop lamp switch	During driving	OFF

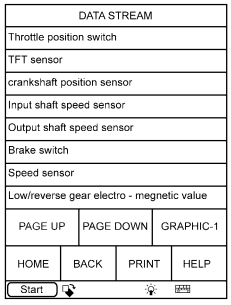

ltsmd080001t

Is the check result normal?

Yes >> The condition that caused this DTC is intermittent (See Diagnostic Help in Section 08 Transaxle & Transfer Case).

No >> Go to the next step.

Downloaded from www.Manualslib.com manuals search engine

2. CHECK BRAKE SWITCH POWER SUPPLY

- Stop vehicle.
- Check sensor power supply between sensor terminal 3 and ground in the sensor electrical connector C-005.

BRAKE SWITCH CONDITION	VALUE (VOLT)
Depress brake switch	Battery voltage
Release brake switch	0

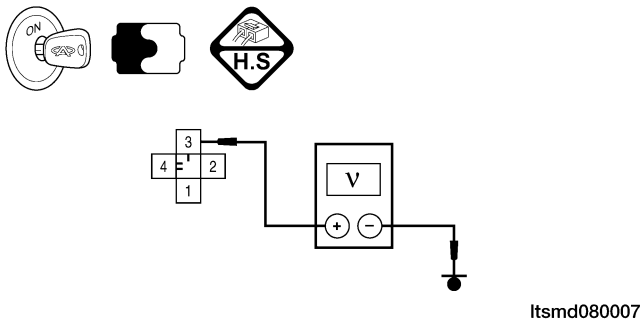

Is the check result normal?

Yes >> Go to the next step.

No >> Replace the brake switch.

3. DETECT MALFUNCTIONING PART

- Check the following:
  - Harness connectors A-102, E-105
  - Harness for a short between TCM and brake switch

Is the check result normal?

Yes >> Go to the next step.

No >> Repair or replace short to power in harness or connectors.

4. CHECK DTC

- With the X-431 scan tool, read TCM DTCs.
- Refer to ″DTC Confirmation Procedure″.

Is DTC 26 still present?

Yes >> Replace the TCM.

No >> The system is now operating properly.
Reassemble the vehicle and road test to verify the customers complaint is repaired.

Downloaded from www.Manualslib.com manuals search engine

31 - Reverse/Low Solenoid Malfunction

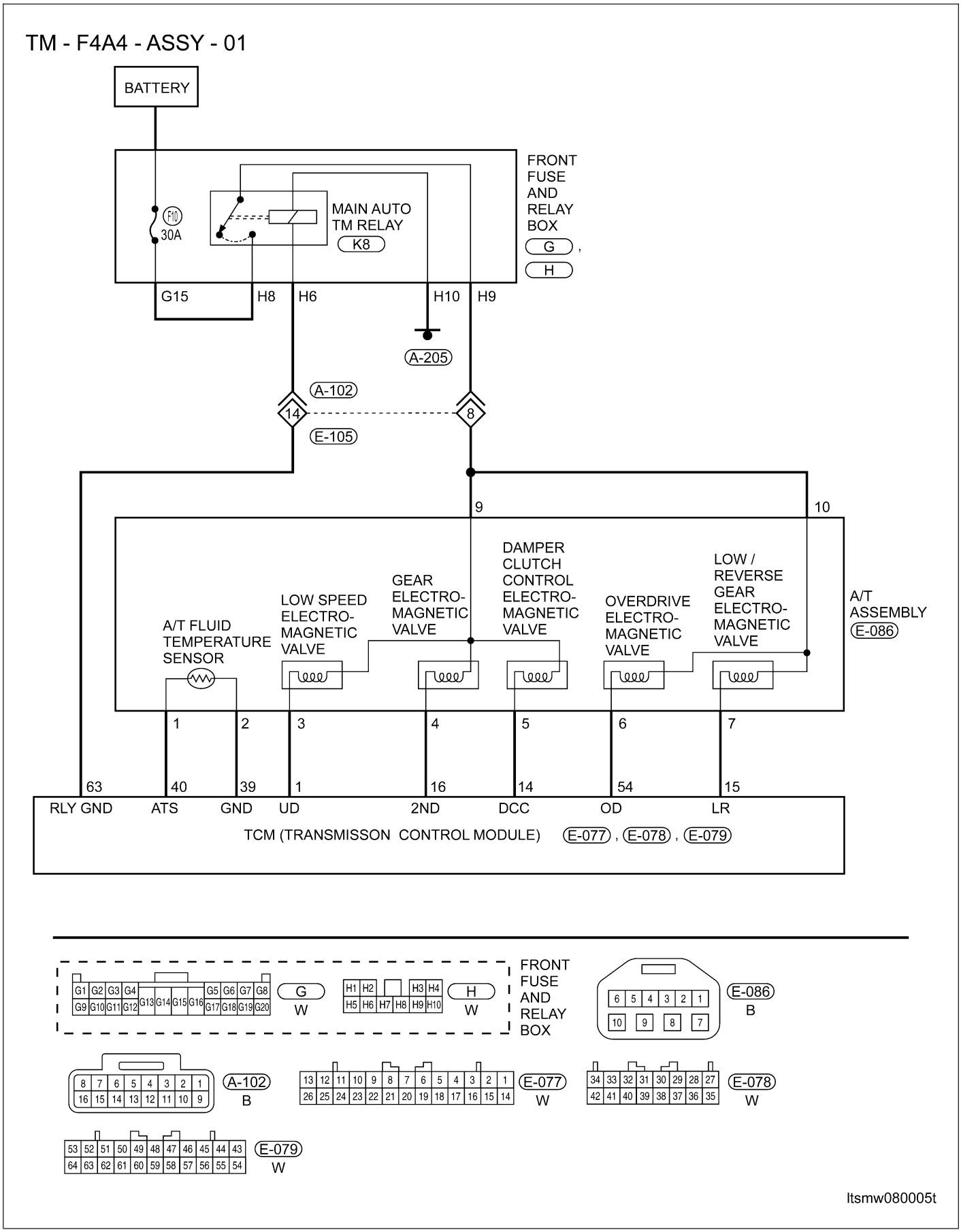

Downloaded from www.Manualslib.com manuals search engine

On Board Diagnostic Logic

- Self-diagnosis detection logic.

DTC No.	DTC DEFINITION	DTC Detection Condition	DTC Set Condition	POSSIBLE CAUSES
31	Reverse/low (R/L) solenoid malfunction	Vehicle is driving	• The Transaxle Control Module (TCM) will set this DTC when the TCM detected an improper voltage drop when it tries to operate the solenoid valve. • If the DTC was set, then the A/T will be locked in 3rd gear (D gear).	• Solenoid • Harness or connectors (The sensor circuit is open or shorted) • TCM

DTC Confirmation Procedure:

Before performing the following procedure, confirm that battery voltage is more than 12 V.

- Connect the X-431 scan tool to the Data Link Connector (DLC) - use the most current software available.
- After connection, press POWER key to start X-431.
- Turn ignition switch on, with the scan tool, view and erase stored DTCs in the TCM.
- Start engine and warm it to normal operating temperature, then select ″D″ position.
- Drive the vehicle in 1st, 2nd, 3rd and 4th gears.
- With the scan tool, select view DTC and data stream.
- If the DTC is detected, the DTC condition is current. Go to Diagnostic Procedure - Step 1.
- If the DTC is not detected, the DTC condition is intermittent (See Diagnostic Help and Intermittent DTC Troubleshooting in Section 08 Transaxle & Transfer Case for more information).

NOTE :
While performing electrical diagnosis & testing, always refer to the electrical schematics for specific circuit and component information.

Diagnostic Procedure

1. CHECK A/T SOLENOID SIGNAL

- With the scan tool, select view DTC and data stream for A/T.
- Start the engine.
- Monitor the value of the gear position as indicated in the following table while driving:

GEAR POSITION	ELECTRO-MAGNETIC VALVE				
	L/R	GEAR 2	UD	OD	DCC (REF)
Gear 1	Off	On	Off	On	Off
Gear 2	On	Off	Off	On	On
Gear 3	On	Off	Off	Off	On
Gear 4	On	Off	On	Off	On
Reverse gear	Off	On	On	On	Off
Neutral gear/ Parking	Off	On	On	On	Off

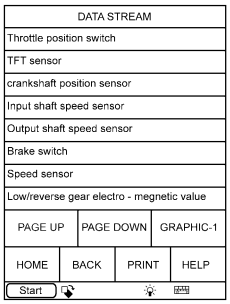

ltsmd080001t

Downloaded from www.Manualslib.com manuals search engine

Is the check result normal?

Yes >> The condition that caused this DTC is intermittent (See Diagnostic Help in Section 08 Transaxle & Transfer Case).

No >> Go to the next step.

2. ACTUATE TEST

- With X-431, perform the solenoid actuate test.
- The solenoid should be heard.

Is the check result normal?

Yes >> Go to step 7.

No >> Go to the next step.

3. CHECK REVERSE/LOW GEAR ELECTRO-MAGNETIC VALVE

- Turn the ignition switch off.
- Disconnect A/T assembly connector.

NUMBER	SOLENOID	WIRE COLOR
1	Low Speed Electro-Magnetic Valve (UD)	White / Red
2	2nd Gear Electro-Magnetic Valve (2nd)	Yellow / Red
3	Damp clutch system control Electro-Magnetic Valve (DCC)	Brown / Yellow
4	Overdrive Electro-Magnetic Valve (OD)	Blue / Yellow
5	Low/reverse Gear Electro-Magnetic Valve (L/R)	Black / Red

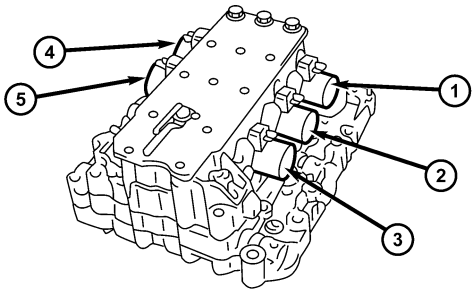

ltsmd080008

Downloaded from www.Manualslib.com manuals search engine

- Check R/L solenoid resistance as shown in the following table:

A/T ASSEMBLY TERMINAL	LOW/ REVERSE GEAR ELECTRO-MAGNETIC VALVE (L/R)	OVERDRIVE ELECTRO-MAGNETIC VALVE (OD)	2ND GEAR ELECTRO-MAGNETIC VALVE (2ND)	LOW SPEED ELECTRO-MAGNETIC VALVE (UD)
	7 - 10	6 - 10	4 - 9	3 - 9
Resistance (23°C)	7.3 - 0.69 (Ω)			

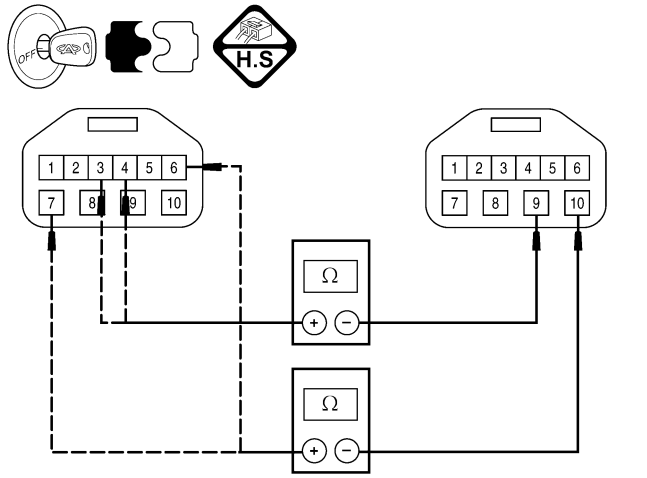

ltsmd080010

Is the check result normal?

Yes >> Replace the L/R Electro-Magnetic Valve with a known good one. With the X-431, perform the solenoid actuate test.
– If the solenoid can be heard, the system is normal.
– If the solenoid can't be heard, go to the next step.

No >> Replace the damaged L/R Electro-Magnetic Valve.

4. CHECK R/L SOLENOID POWER SUPPLY

- Turn the ignition switch on.
- Check R/L solenoid power supply between E-086 terminal 10 and ground in the A/T assembly connector E-086.
- Voltage should be more than 12 V.

Is the check result normal?

Yes >> Go to step 6.

No >> Go to the next step.

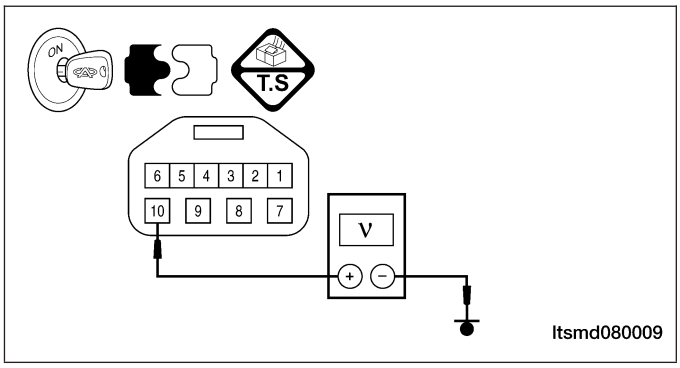

ltsmd080009

Downloaded from www.Manualslib.com manuals search engine

5. DETECT MALFUNCTIONING PART

- Check the following:
  - Harness connectors A-102, E-105
  - Body fuse and relay box H9, H8, G15
  - Fuse 10 (30A)
  - Harness open or short between A/T assembly connector and fuse

Is the check result normal?

Yes >> Go to the next step.

No >> Repair or replace the open circuit or short to ground or short to power in harness or connectors.

6. CHECK R/L SOLENOID CONTROL CIRCUIT

- Turn the ignition switch off.
- Disconnect TCM connector.
- Check for harness continuity between the following terminals:

A/T ASSEMBLY TERMINAL	TCM CONNECTOR TERMINAL	CONTINUITY
7	15	Yes

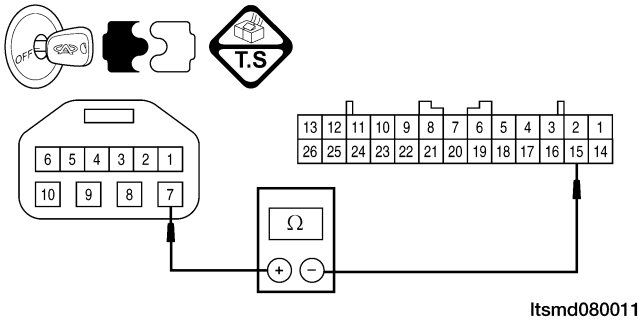

- Check the harness for short to power and short to ground.

Is the check result normal?

Yes >> Go to the next step.

No >> Repair or replace the open circuit or short to power or short to ground.

7. CHECK DTC

- With the X-431 scan tool, read TCM DTCs.
- Refer to ″DTC Confirmation Procedure″.

Is the check result normal?

Yes >> The system is now operating properly.
Reassemble the vehicle and road test to verify the customers complaint is repaired.

No >> Replace the TCM.

Downloaded from www.Manualslib.com manuals search engine

32 - Low Speed Solenoid Malfunction

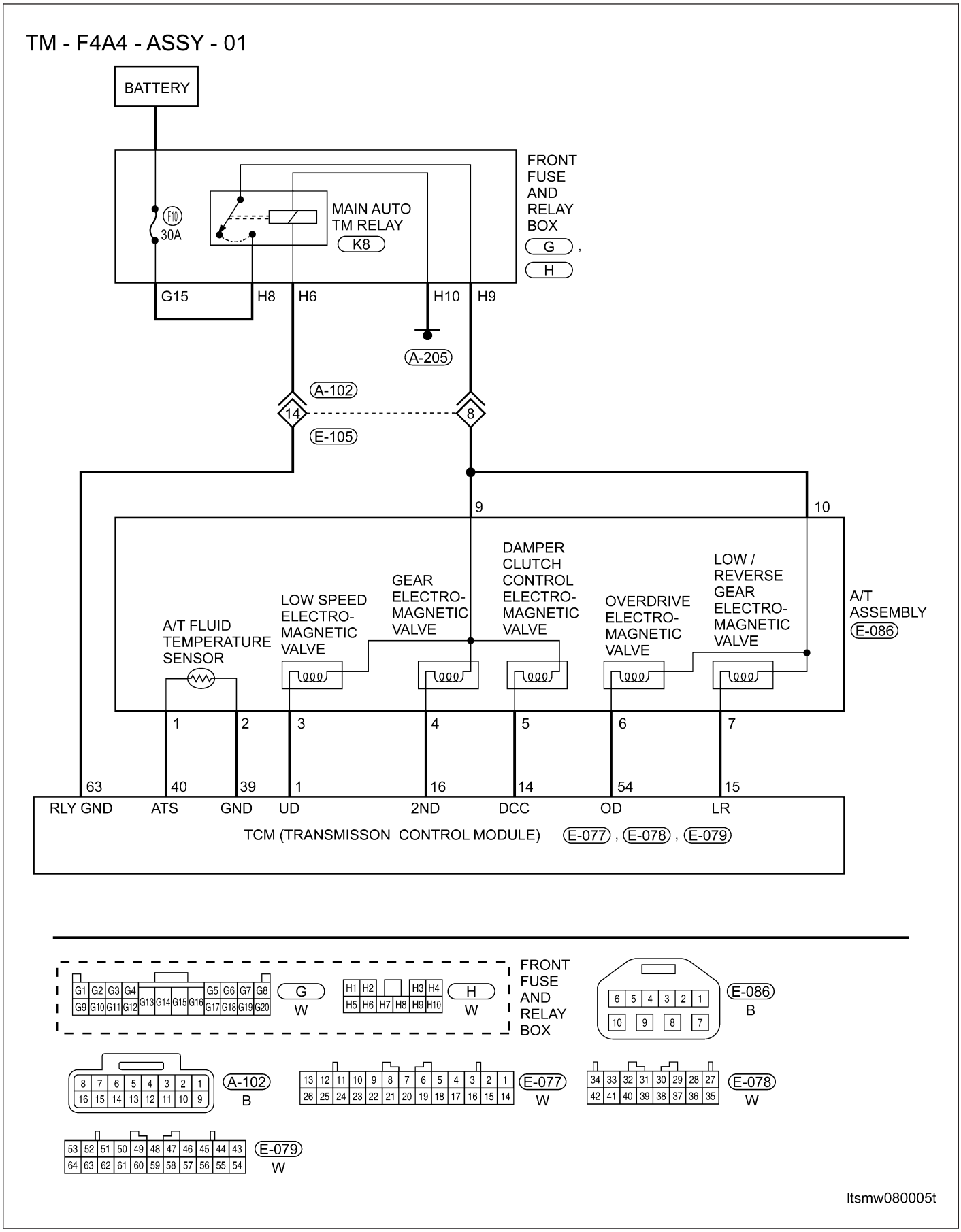

Downloaded from www.Manualslib.com manuals search engine

On Board Diagnostic Logic

- Self-diagnosis detection logic.

DTC NO.	DTC DEFINITION	DTC DETECTION CONDITION	DTC SET CONDITION	POSSIBLE CAUSES
32	Low speed solenoid malfunction	Vehicle is driving	• The Transaxle Control Module (TCM) will set this DTC when the TCM detected an improper voltage drop when it tries to operate the solenoid valve. • If the DTC was set, then the A/T will be locked in 3rd gear (D gear).	• Solenoid • Harness or connectors (The sensor circuit is open or shorted) • TCM

DTC Confirmation Procedure:

Before performing the following procedure, confirm that battery voltage is more than 12 V.

- Connect the X-431 scan tool to the Data Link Connector (DLC) - use the most current software available.
- After connection, press POWER key to start X-431.
- Turn ignition switch on, with the scan tool, view and erase stored DTCs in the TCM.
- Start the engine and warm it to normal operating temperature.
- Drive the vehicle.
- With the scan tool, select view DTC and data stream.
- If the DTC is detected, the DTC condition is current. Go to Diagnostic Procedure - Step 1.
- If the DTC is not detected, the DTC condition is intermittent (See Diagnostic Help and Intermittent DTC Troubleshooting in Section 08 Transaxle & Transfer Case for more information).

NOTE :
While performing electrical diagnosis & testing, always refer to the electrical schematics for specific circuit and component information.

Downloaded from www.Manualslib.com manuals search engine

Diagnostic Procedure

1. CHECK A/T SOLENOID VALVE SIGNAL

- With the scan tool, select view DTC and data stream for A/T.
- Start the engine.
- Monitor the value of the gear position as indicated in the following table while driving:

GEAR POSITION	ELECTRO-MAGNETIC VALVE				
	L/R	GEAR 2	UD	OD	DCC (REF)
Gear 1	Off	On	Off	On	Off
Gear 2	On	Off	Off	On	On
Gear 3	On	Off	Off	Off	On
Gear 4	On	Off	On	Off	On
Reverse gear	Off	On	On	On	Off
Neutral gear/ Parking	Off	On	On	On	Off

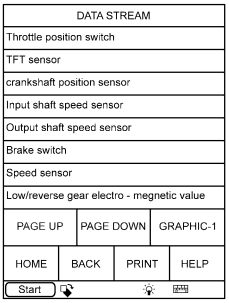

ltsmd080001t

Is the check result normal?

Yes >> The condition that caused this DTC is intermittent (See Diagnostic Help in Section 08 Transaxle & Transfer Case).

No >> Go to the next step.

2. ACTUATE TEST

- With X-431, perform the solenoid actuate test.
- The solenoid should be heard.

Is the check result normal?

Yes >> Go to step 7.

No >> Go to the next step.

Downloaded from www.Manualslib.com manuals search engine

3. CHECK LOW SPEED ELECTRO-MAGNETIC VALVE

- Stop vehicle and turn ignition switch off.
- Disconnect A/T assembly connector.

NUMBER	SOLENOID	WIRE COLOR
1	Low Speed Electro-Magnetic Valve (UD)	White / Red
2	2nd Gear Electro-Magnetic Valve (2nd)	Yellow / Red
3	Damp clutch system control Electro-Magnetic Valve (DCC)	Brown / Yellow
4	Overdrive Electro-Magnetic Valve (OD)	Blue / Yellow
5	Low/reverse Gear Electro-Magnetic Valve (L/R)	Black / Red

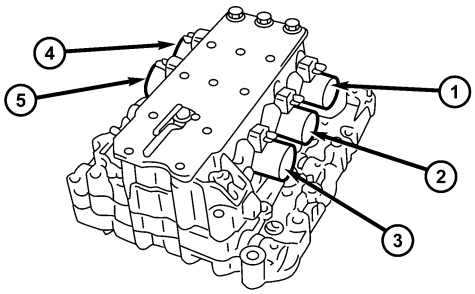

ltsmd080008

- Check UD solenoid resistance as shown in the following table:

A/T ASSEMBLY TERMINAL	LOW/ REVERSE GEAR ELECTRO-MAGNETIC VALVE (L/R)	OVERDRIVE ELECTRO-MAGNETIC VALVE (OD)	2ND GEAR ELECTRO-MAGNETIC VALVE (2ND)	LOW SPEED ELECTRO-MAGNETIC VALVE (UD)
	7 - 10	6 - 10	4 - 9	3 - 9
Resistance (23°C)	7.3 - 0.69 Ω			

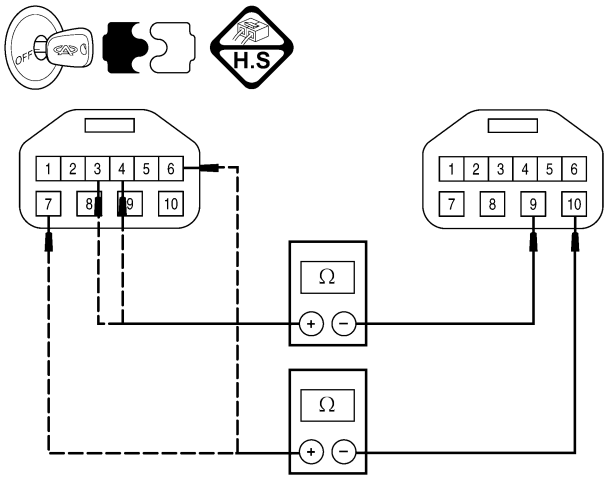

ltsmd080010

Is the check result normal?

Yes >> Replace the low speed Electro-Magnetic Valve with a known good one.
With X-431, perform the solenoid actuate test.
– If the solenoid can be heard, the system is normal.
– If the solenoid can't be heard, go to the next step.

No >> Replace the damaged low speed Electro-Magnetic Valve.

Downloaded from www.Manualslib.com manuals search engine

4. CHECK UD SOLENOID POWER SUPPLY

- Turn ignition switch on.
- Check UD solenoid power supply between E-086 terminal 9 and ground in the A/T assembly connector E-086.
- Voltage should be more than 12 V.

Is the check result normal?

Yes >> Go to step 6.

No >> Go to the next step.

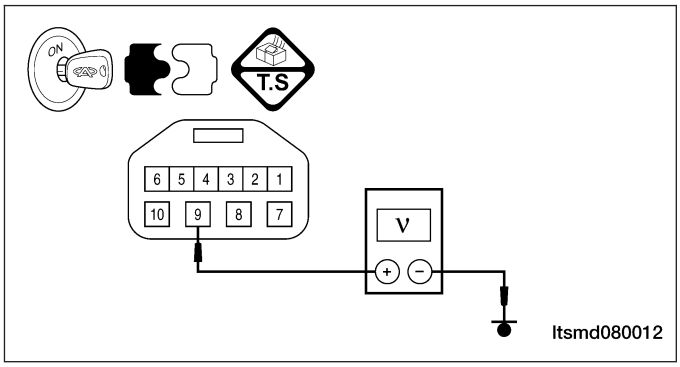

5. DETECT MALFUNCTIONING PART

- Check the following:
  - Harness connectors A-102, E-105.
  - Body fuse and relay box H9, H8, G15.
  - Fuse 10 (30A).
  - Harness for an open or short between A/T assembly connector and fuse.

Is the check result normal?

Yes >> Go to the next step.

No >> Repair or replace the open circuit or short to ground or short to power in harness or connectors.

6. CHECK UD SOLENOID CONTROL CIRCUIT

- Turn ignition switch off.
- Disconnect TCM connector.
- Check for harness continuity between the following terminals:

A/T ASSEMBLY TERMINAL	TCM CONNECTOR TERMINAL	CONTINUITY
3	1	Yes

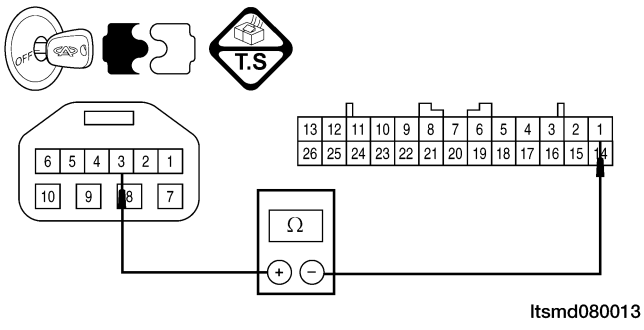

- Check the harness for short to power and short to ground.

Is the check result normal?

Yes >> Go to the next step.

No >> Repair or replace the circuit for an open or short to power or short to ground.

Downloaded from www.Manualslib.com manuals search engine

7. CHECK DTC

- With the X-431 scan tool, read TCM DTCs.
- Refer to ″DTC Confirmation Procedure″.

Is DTC 32 still present?

Yes >> Replace the TCM.

No >> The system is now operating properly.
Reassemble the vehicle and road test to verify the customers complaint is repaired.

Downloaded from www.Manualslib.com manuals search engine

33 - 2nd Gear Solenoid Open Circuit

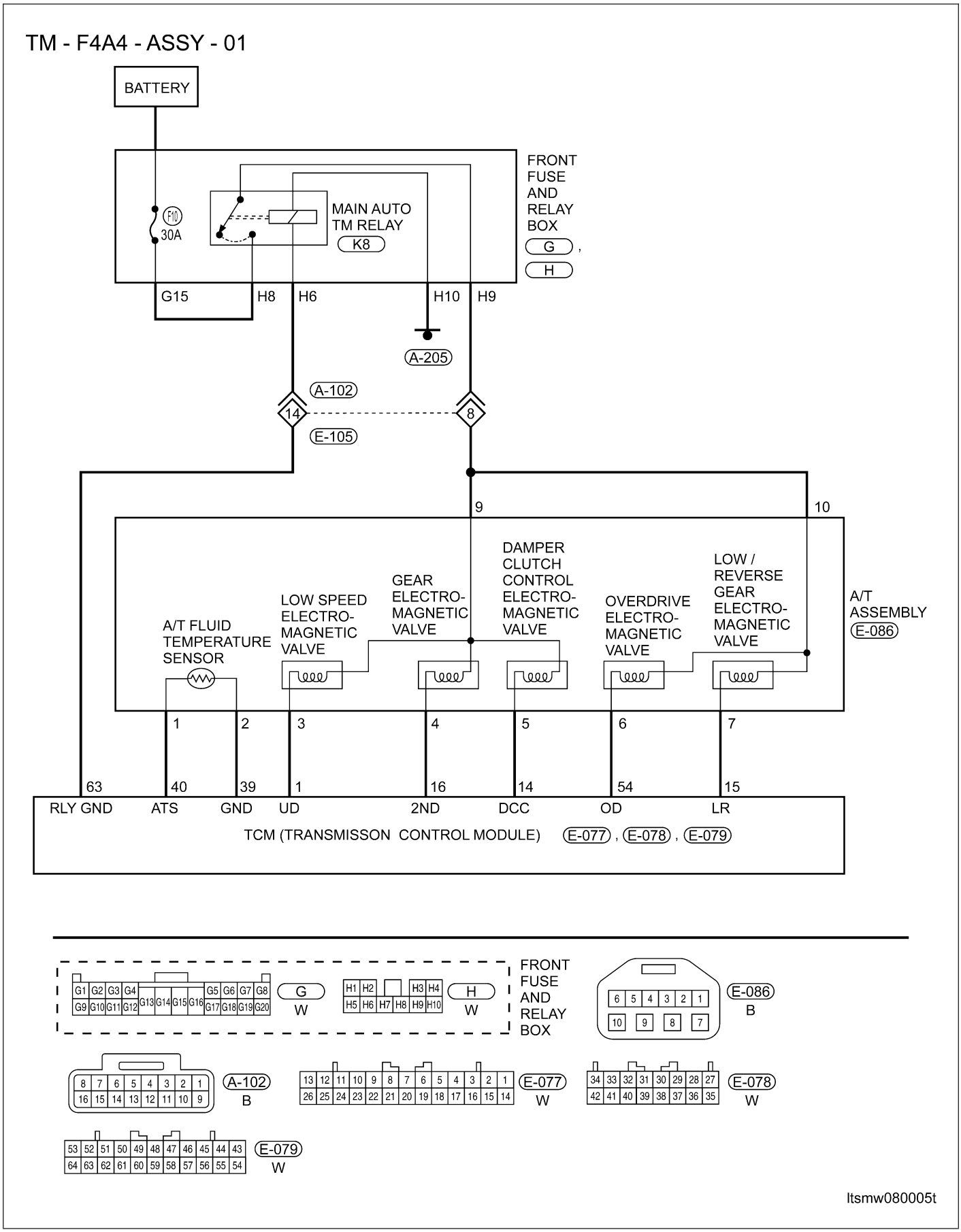

Downloaded from www.Manualslib.com manuals search engine

On Board Diagnostic Logic

- Self-diagnosis detection logic.

DTC NO.	DTC DEFINITION	DTC DETECTION CONDITION	DTC SET CONDITION	POSSIBLE CAUSES
33	2nd Gear solenoid open circuit	Vehicle is driving	• The Transaxle Control Module (TCM) will set this DTC when the TCM detected an improper voltage drop when it tries to operate the solenoid valve. • If the DTC was set, then the A/T will be locked at 3rd gear (D gear).	• Solenoid • Harness or connectors (The sensor circuit is open or shorted) • TCM

DTC Confirmation Procedure:

Before performing the following procedure, confirm that battery voltage is more than 12 V.

- Connect the X-431 scan tool to the Data Link Connector (DLC) - use the most current software available.
- After connection, press POWER key to start X-431.
- Turn ignition switch on, with the scan tool, view and erase stored DTCs in the TCM.
- Start engine and warm it to normal operating temperature, then select ″D″ position.
- Drive the vehicle in 1st, 2nd, 3rd and 4th gears.
- With the scan tool, select view DTC and data stream.
- If the DTC is detected, the DTC condition is current. Go to Diagnostic Procedure - Step 1.
- If the DTC is not detected, the DTC condition is intermittent (See Diagnostic Help and Intermittent DTC Troubleshooting in Section 08 Transaxle & Transfer Case for more information).

NOTE :
While performing electrical diagnosis & testing, always refer to the electrical schematics for specific circuit and component information.

Downloaded from www.Manualslib.com manuals search engine

Diagnostic Procedure

1. CHECK A/T SOLENOID SIGNAL

- With the scan tool, select view DTC and data stream for A/T.
- Start the engine.
- Monitor the value of the gear position as indicated in the following table while driving:

GEAR POSITION	ELECTRO-MAGNETIC VALVE				
	L/R	GEAR 2	UD	OD	DCC (REF)
Gear 1	Off	On	Off	On	Off
Gear 2	On	Off	Off	On	On
Gear 3	On	Off	Off	Off	On
Gear 4	On	Off	On	Off	On
Reverse gear	Off	On	On	On	Off
Neutral gear/ Parking	Off	On	On	On	Off

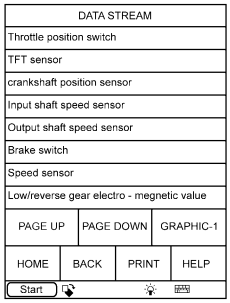

ltsmd080001t

Is the check result normal?

Yes >> The condition that caused this DTC is intermittent (See Diagnostic Help in Section 08 Transaxle & Transfer Case).

No >> Go to the next step.

2. ACTUATE TEST

- With X-431, perform the solenoid actuate test.
- The solenoid should be heard.

Is the check result normal?

Yes >> Go to step 7.

No >> Go to the next step.

Downloaded from www.Manualslib.com manuals search engine

3. CHECK 2ND GEAR ELECTRO-MAGNETIC VALVE

- Stop vehicle and turn ignition switch off.
- Disconnect A/T assembly connector.

NUMBER	SOLENOID	WIRE COLOR
1	Low Speed Electro-Magnetic Valve (UD)	White / Red
2	2nd Gear Electro-Magnetic Valve (2nd)	Yellow / Red
3	Damp clutch system control Electro-Magnetic Valve (DCC)	Brown / Yellow
4	Overdrive Electro-Magnetic Valve (OD)	Blue / Yellow
5	Low/reverse Gear Electro-Magnetic Valve (L/R)	Black / Red

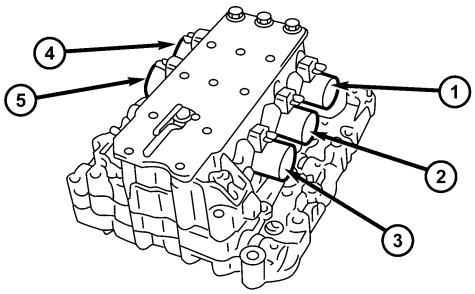

ltsmd080008

- Check 2nd solenoid resistance as shown in the following table:

A/T ASSEMBLY TERMINAL	LOW/ REVERSE GEAR ELECTRO-MAGNETIC VALVE (L/R)	OVERDRIVE ELECTRO-MAGNETIC VALVE (OD)	2ND GEAR ELECTRO-MAGNETIC VALVE (2ND)	LOW SPEED ELECTRO-MAGNETIC VALVE (UD)
	7 - 10	6 - 10	4 - 9	3 - 9
Resistance (23°C)	7.3 - 0.69 Ω			

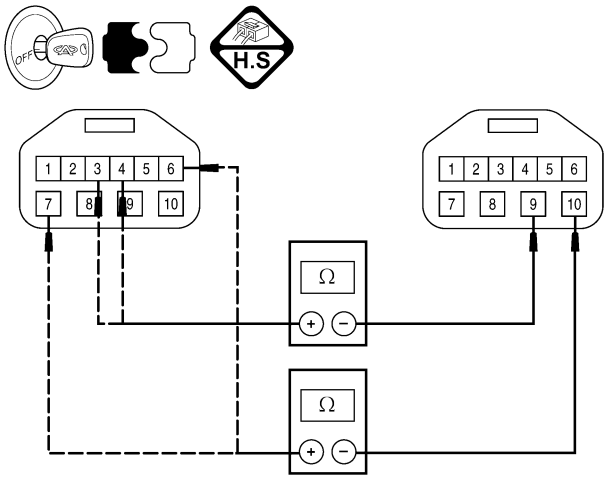

ltsmd080010

Is the check result normal?

Yes >> Replace the 2nd gear Electro-Magnetic Valve with a known good one.
With X-431, perform the solenoid actuate test.
– If the solenoid can be heard, the system is normal.
– If the solenoid can't be heard, go to the next step.

No >> Replace the damaged 2nd gear Electro-Magnetic Valve.

Downloaded from www.Manualslib.com manuals search engine

4. CHECK 2ND GEAR SOLENOID POWER SUPPLY

- Turn ignition switch on.
- Check 2nd gear solenoid power supply between E-086 terminal 9 and ground in the A/T assembly connector E-086.
- Voltage should be more than 12 V.

Is the check result normal?

Yes >> Go to step 6.

No >> Go to the next step.

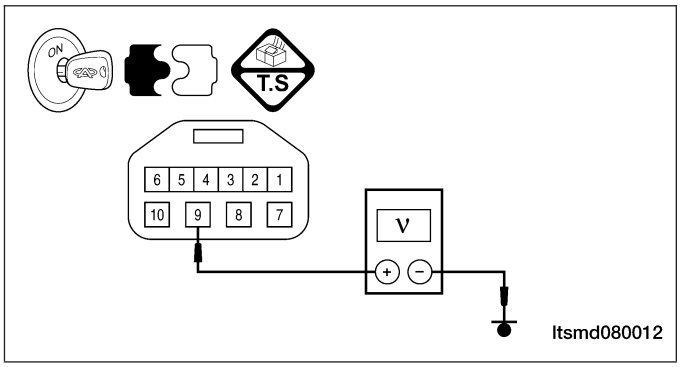

5. DETECT MALFUNCTIONING PART

- Check the following:
  - Harness connectors A-102, E-105.
  - Body fuse and relay box H9, H8, G15.
  - Fuse 10 (30A).
  - Harness for an open or short between A/T assembly connector and fuse.

Is the check result normal?

Yes >> Go to the next step.

No >> Repair or replace the open circuit or short to ground or short to power in harness or connectors.

6. CHECK 2ND GEAR SOLENOID CONTROL CIRCUIT

- Turn ignition switch off.
- Disconnect TCM connector.
- Check for harness continuity between the following terminals:

A/T ASSEMBLY TERMINAL	TCM CONNECTOR TERMINAL	CONTINUITY
4	16	Yes

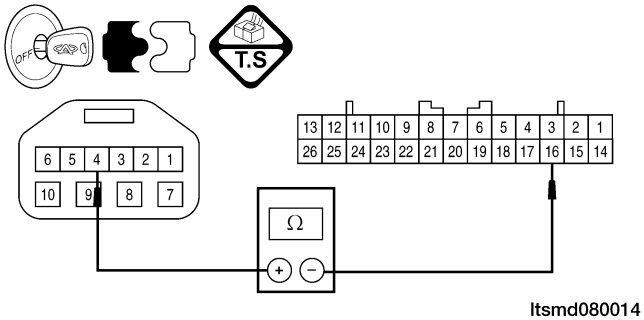

- Check the harness for short to power and short to ground.

Is the check result normal?

Yes >> Go to the next step.

No >> Repair or replace the open circuit or short to power or short to ground.

Downloaded from www.Manualslib.com manuals search engine

7. CHECK DTC

- With the X-431 scan tool, read TCM DTCs.
- Refer to ″DTC Confirmation Procedure″.

Is DTC 33 still present?

Yes >> Replace the TCM.

No >> The system is now operating properly.
Reassemble the vehicle and road test to verify the customers complaint is repaired.

Downloaded from www.Manualslib.com manuals search engine

34 - Overdrive Solenoid Circuit Malfunction

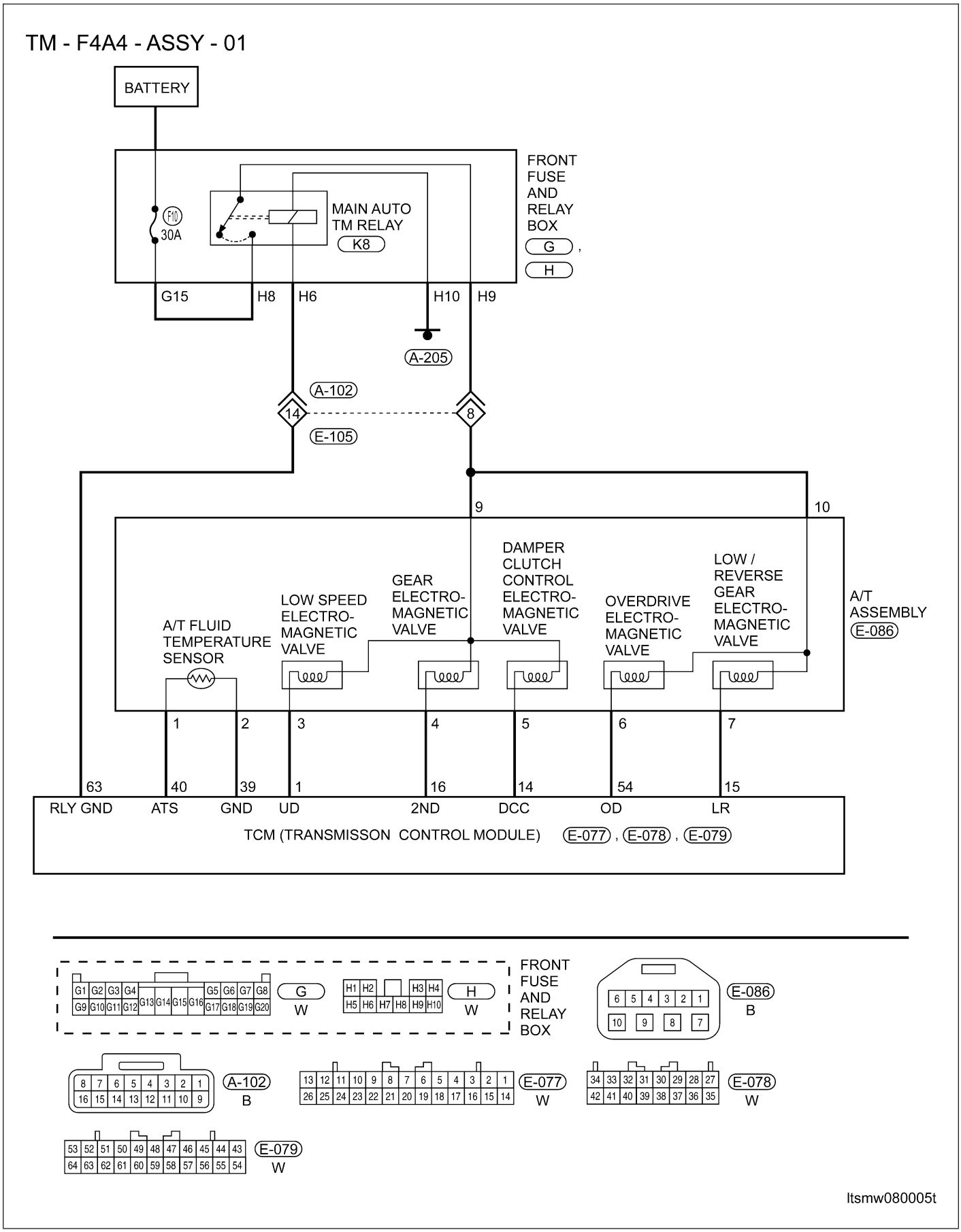

Downloaded from www.Manualslib.com manuals search engine

On Board Diagnostic Logic

- Self-diagnosis detection logic.

DTC NO.	DTC DEFINITION	DTC DETECTION CONDITION	DTC SET CONDITION	POSSIBLE CAUSES
34	Overdrive solenoid circuit malfunction	Vehicle is driving	• The Transaxle Control Module (TCM) will set this DTC when the TCM detected an improper voltage drop when it tries to operate the solenoid valve. • If the DTC was set, then the A/T will be locked in 3rd gear (D gear).	• Solenoid • Harness or connectors (The sensor circuit is open or shorted) • TCM

DTC Confirmation Procedure:

Before performing the following procedure, confirm that battery voltage is more than 12 V.

- Connect the X-431 scan tool to the Data Link Connector (DLC) - use the most current software available.
- After connection, press POWER key to start X-431.
- Turn ignition switch on, with the scan tool, view and erase stored DTCs in the TCM.
- Start engine and warm it to normal operating temperature, then select D position.
- Drive the vehicle in 1st, 2nd, 3rd and 4th gears.
- With the scan tool, select view DTC and data stream.
- If the DTC is detected, the DTC condition is current. Go to Diagnostic Procedure - Step 1.
- If the DTC is not detected, the DTC condition is intermittent (See Diagnostic Help and Intermittent DTC Troubleshooting in Section 08 Transaxle & Transfer Case for more information).

NOTE :

While performing electrical diagnosis & testing, always refer to the electrical schematics for specific circuit and component information.

Downloaded from www.Manualslib.com manuals search engine

Diagnostic Procedure

1. CHECK A/T SOLENOID SIGNAL

- With the scan tool, select view DTC and data stream for A/T.
- Start the engine.
- Monitor the value of the gear position as indicated in the following table while driving:

GEAR POSITION	ELECTRO-MAGNETIC VALVE				
	L/R	GEAR 2	UD	OD	DCC (REF)
Gear 1	Off	On	Off	On	Off
Gear 2	On	Off	Off	On	On
Gear 3	On	Off	Off	Off	On
Gear 4	On	Off	On	Off	On
Reverse gear	Off	On	On	On	Off
Neutral gear/ Parking	Off	On	On	On	Off

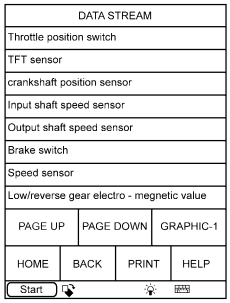

ltsmd080001t

Is the check result normal?

Yes >> The condition that caused this DTC is intermittent (See Diagnostic Help in Section 08 Transaxle & Transfer Case).

No >> Go to the next step.

2. ACTUATE TEST

- With X-431, perform the solenoid actuate test.
- The solenoid should be heard.

Is the check result normal?

Yes >> Go to step 7.

No >> Go to the next step.

Downloaded from www.Manualslib.com manuals search engine

3. CHECK OVERDRIVE ELECTRO-MAGNETIC VALVE

- Stop vehicle and turn ignition switch off.
- Disconnect A/T assembly connector.

NUMBER	SOLENOID	WIRE COLOR
1	Low Speed Electro-Magnetic Valve (UD)	White / Red
2	2nd Gear Electro-Magnetic Valve (2nd)	Yellow / Red
3	Damp clutch system control Electro-Magnetic Valve (DCC)	Brown / Yellow
4	Overdrive Electro-Magnetic Valve (OD)	Blue / Yellow
5	Low/reverse Gear Electro-Magnetic Valve (L/R)	Black / Red

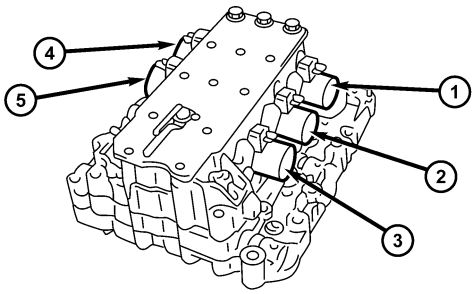

ltsmd080008

- Check OD solenoid resistance as shown in the following table:

A/T ASSEMBLY TERMINAL	LOW/ REVERSE GEAR ELECTRO-MAGNETIC VALVE (L/R)	OVERDRIVE ELECTRO-MAGNETIC VALVE (OD)	2ND GEAR ELECTRO-MAGNETIC VALVE (2ND)	LOW SPEED ELECTRO-MAGNETIC VALVE (UD)
	7 - 10	6 - 10	4 - 9	3 - 9
Resistance (23°C	7.3 - 0.69 Ω			

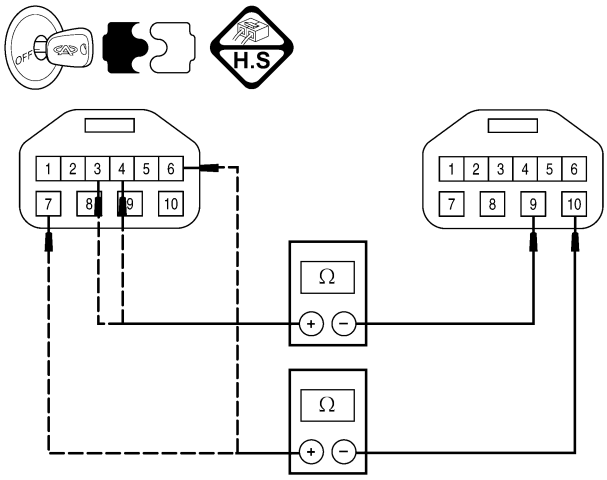

ltsmd080010

Is the check result normal?

Yes >> Replace the OD Electro-Magnetic Valve with a known good one.
With X-431, perform the solenoid actuate test.
– If the solenoid can be heard, the system is normal.
– If the solenoid can't be heard, go to the next step.

No >> Replace the damaged OD Electro-Magnetic Valve.

Downloaded from www.Manualslib.com manuals search engine

4. CHECK OD SOLENOID POWER SUPPLY

- Turn ignition switch on.
- Check OD solenoid power supply between E-086 terminal 10 and ground in the A/T assembly connector E-086.
- Voltage should be more than 12 V.

Is the check result normal?

Yes >> Go to step 6.

No >> Go to the next step.

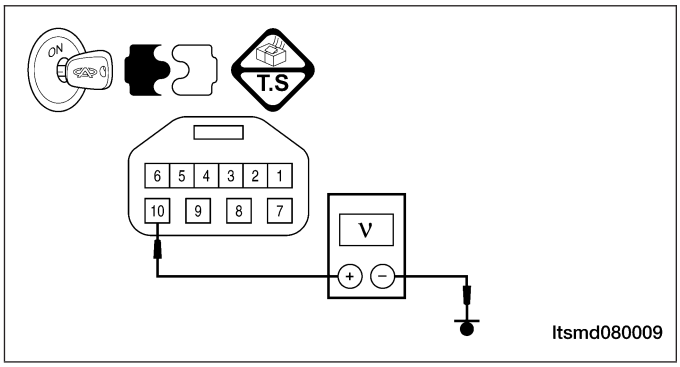

5. DETECT MALFUNCTIONING PART

- Check the following:
  - Fuse 10 (30A).
  - Harness connectors A-102, E-105.
  - Body fuse and relay box H9, H8, G15.
  - Harness for an open or short between A/T assembly connector and fuse.

Is the check result normal?

Yes >> Go to the next step.

No >> Repair or replace the circuit for an open or short to ground or short to power in harness or connectors.

6. CHECK OD SOLENOID CONTROL CIRCUIT

- Turn ignition switch off.
- Disconnect TCM connector.
- Check for harness continuity between the following terminals:

A/T ASSEMBLY TERMINAL	TCM CONNECTOR TERMINAL	CONTINUITY
6	54	Yes

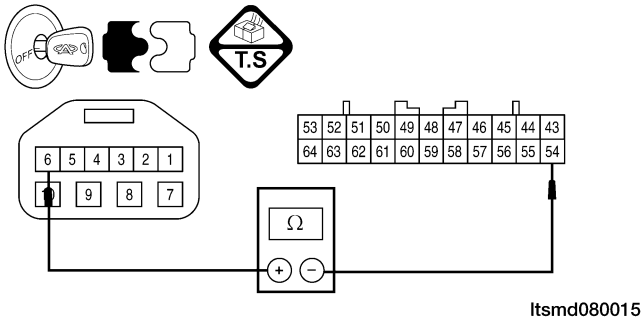

- Check the harness for short to power and short to ground.

Is the check result normal?

Yes >> Go to the next step.

No >> Repair or replace the circuit for an open or short to power or short to ground.

Downloaded from www.Manualslib.com manuals search engine

7. CHECK DTC

- With the X-431 scan tool, read TCM DTCs.
- Refer to ″DTC Confirmation Procedure″.

Is DTC 34 still present?

Yes >> Replace the TCM.

No >> The system is now operating properly.
Reassemble the vehicle and road test to verify the customers complaint is repaired.

Downloaded from www.Manualslib.com manuals search engine

36 - Damper Clutch System Control Solenoid Malfunction

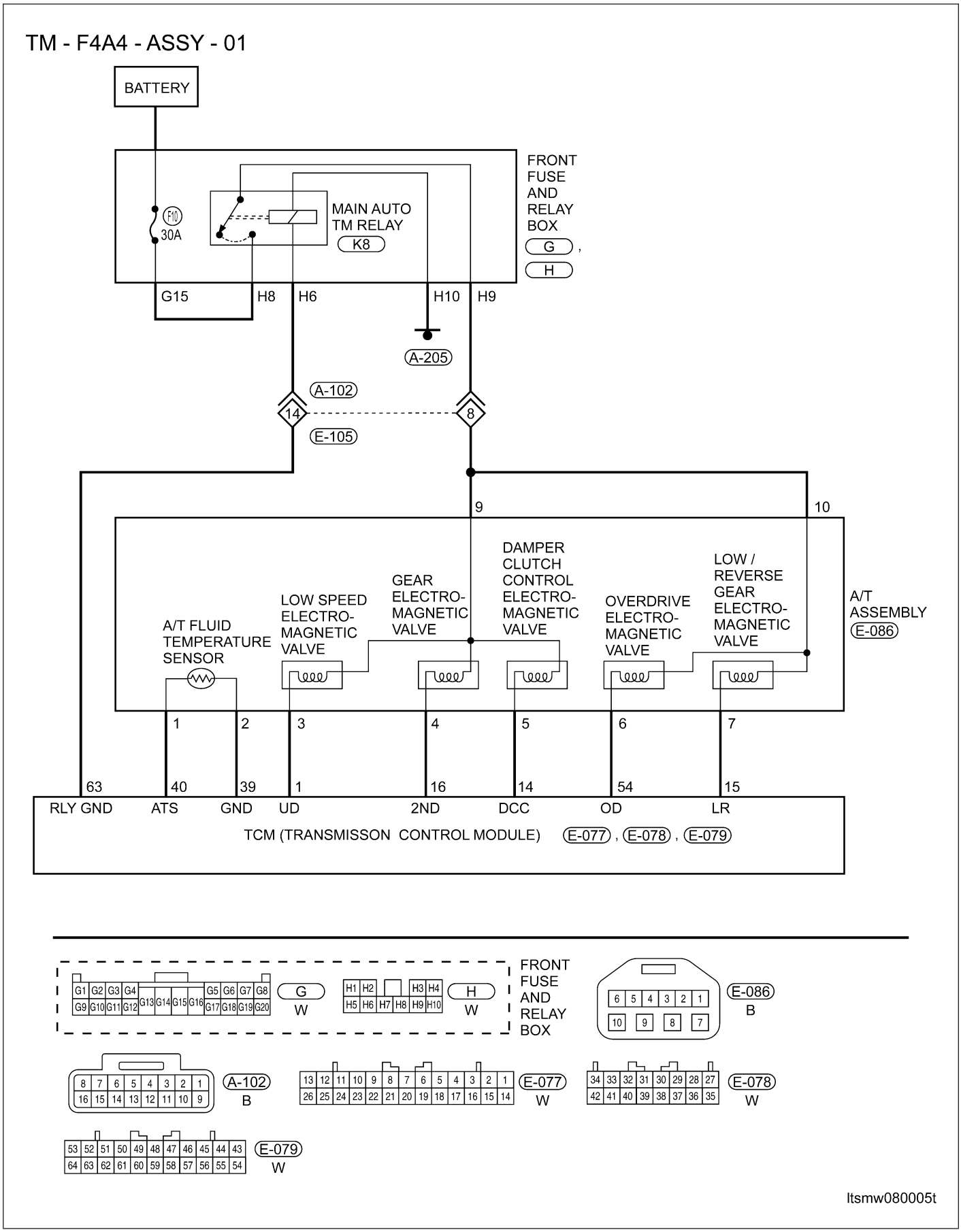

Downloaded from www.Manualslib.com manuals search engine

On Board Diagnostic Logic

- Self-diagnosis detection logic.

DTC NO.	DTC DEFINITION	DTC DETECTION CONDITION	DTC SET CONDITION	POSSIBLE CAUSES
36	Damper clutch system control (DCC) solenoid malfunction	Vehicle is driving	• The Transaxle Control Module (TCM) will set this DTC when the TCM detected an improper voltage drop when it tries to operate the solenoid valve. • The Transaxle Control Module (TCM) will set this DTC when the TCM detected that the duty cycle of damper clutch system control solenoid is 100 % for 4 seconds, and the TCM determines the damper clutch system control solenoid is not normal. • If the DTC 36 was set, then the A/T will be locked in 3rd gear (D gear).	• Solenoid • Harness or connectors (The sensor circuit is open or shorted) • TCM

DTC Confirmation Procedure:

Before performing the following procedure, confirm that battery voltage is more than 12 V.

- Connect the X-431 scan tool to the Data Link Connector (DLC) - use the most current software available.
- After connection, press POWER key to start X-431.
- Turn ignition switch on, with the scan tool, view and erase stored DTCs in the TCM.
- Start engine and warm it to normal operating temperature, then select ″D″ position.
- Drive the vehicle in 1st, 2nd, 3rd and 4th gears.
- With the scan tool, select view DTC and data stream.
- If the DTC is detected, the DTC condition is current. Go to Diagnostic Procedure - Step 1.
- If the DTC is not detected, the DTC condition is intermittent (See Diagnostic Help and Intermittent DTC Troubleshooting in Section 08 Transaxle & Transfer Case for more information).

NOTE :
While performing electrical diagnosis & testing, always refer to the electrical schematics for specific circuit and component information.

Downloaded from www.Manualslib.com manuals search engine

Diagnostic Procedure

1. CHECK A/T SOLENOID SIGNAL

- With the scan tool, select view DTC and data stream for A/T.
- Start the engine.
- Monitor the value of the gear position as indicated in the following table while driving:

GEAR POSITION	ELECTRO-MAGNETIC VALVE				
	L/R	GEAR 2	UD	OD	DCC (REF)
Gear 1	Off	On	Off	On	Off
Gear 2	On	Off	Off	On	On
Gear 3	On	Off	Off	Off	On
Gear 4	On	Off	On	Off	On
Reverse gear	Off	On	On	On	Off
Neutral gear/ Parking	Off	On	On	On	Off

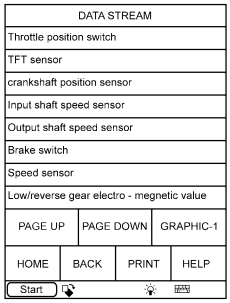

ltsmd080001t

Is the check result normal?

Yes >> The condition that caused this DTC is intermittent (See Diagnostic Help in Section 08 Transaxle & Transfer Case).

No >> Go to the next step.

2. ACTUATE TEST

- With X-431, perform the solenoid actuate test.
- The solenoid should be heard.

Is the check result normal?

Yes >> Go to step 7.

No >> Go to the next step.

Downloaded from www.Manualslib.com manuals search engine

3. CHECK DCC ELECTRO-MAGNETIC VALVE

- Stop vehicle and turn ignition switch off.
- Disconnect A/T assembly connector.

NUMBER	SOLENOID	WIRE COLOR
1	Low Speed Electro-Magnetic Valve (UD)	White / Red
2	2nd Gear Electro-Magnetic Valve (2nd)	Yellow / Red
3	Damp clutch system control Electro-Magnetic Valve (DCC)	Brown / Yellow
4	Overdrive Electro-Magnetic Valve (OD)	Blue / Yellow
5	Low/reverse Gear Electro-Magnetic Valve (L/R)	Black / Red

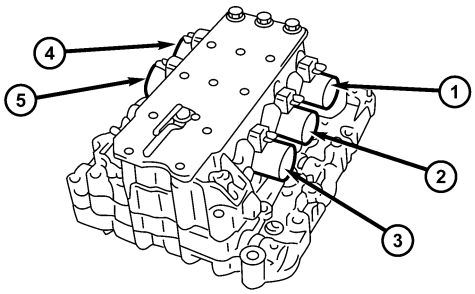

ltsmd080008

- Check DCC solenoid resistance as shown in the following table:

A/T ASSEMBLY TERMINAL	DCC ELECTRO-MAGNETIC VALVE
	5 - 9
RESISTANCE (23°C)	7.3 - 0.69 Ω

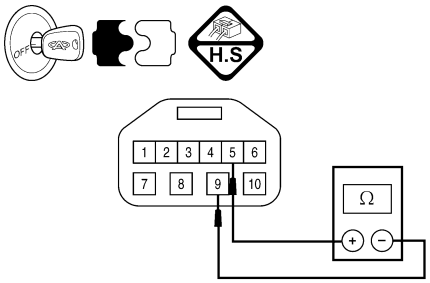

ltsmd080016

Is the check result normal?

Yes >> Replace the DCC Electro-Magnetic Valve with a known good one.
With X-431, perform the solenoid actuate test.
– If the solenoid can be heard, the system is normal.
– If the solenoid can't be heard, go to the next step.

No >> Replace the damaged DCC Electro-Magnetic Valve.

Downloaded from www.Manualslib.com manuals search engine

4. CHECK DCC SOLENOID POWER SUPPLY

- Turn the ignition switch on.
- Check DCC solenoid power supply between E-086 terminal 9 and ground in the A/T assembly connector E-086.
- Voltage should be more than 12 V.

Is the check result normal?

Yes >> Go to step 6.

No >> Go to the next step.

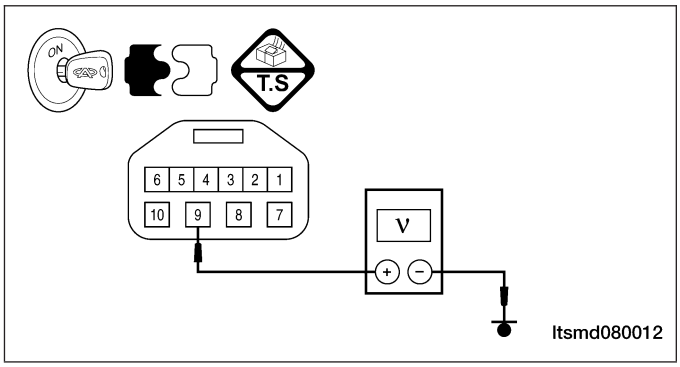

5. DETECT MALFUNCTIONING PART

- Check the following:
  - Fuse 10 (30A).
  - Harness connectors A-102, E-105.
  - Body fuse and relay box H9, H8, G15.
  - Harness for an open or short between A/T assembly connector and fuse.

Is the check result normal?

Yes >> Go to the next step.

No >> Repair or replace the open circuit or short to ground or short to power in harness or connectors.

6. CHECK DCC SOLENOID CONTROL CIRCUIT

- Turn ignition switch off.
- Disconnect TCM connector.
- Check for harness continuity between the following terminals:

A/T ASSEMBLY TERMINAL	TCM CONNECTOR TERMINAL	CONTINUITY
5	14	Yes

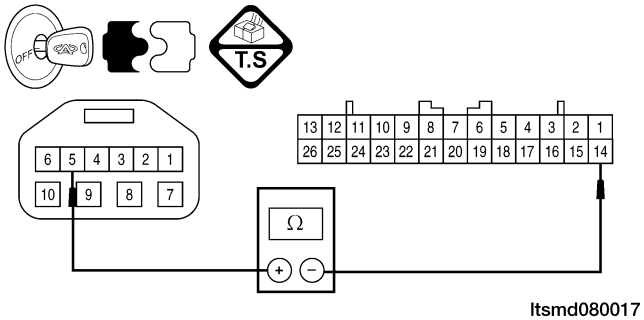

- Check the harness for short to power and short to ground.

Is the check result normal?

Yes >> Go to the next step.

No >> Repair or replace the circuit for an open or short to power or short to ground.

Downloaded from www.Manualslib.com manuals search engine

7. CHECK DTC

- With the X-431 scan tool, read TCM DTCs.
- Refer to ″DTC Confirmation Procedure″.

Is DTC 36 still present?

Yes >> Replace the TCM.

No >> The system is now operating properly.
Reassemble the vehicle and road test to verify the customers complaint is repaired.

Downloaded from www.Manualslib.com manuals search engine

41 - First Gear, Ratio Out Of Limits

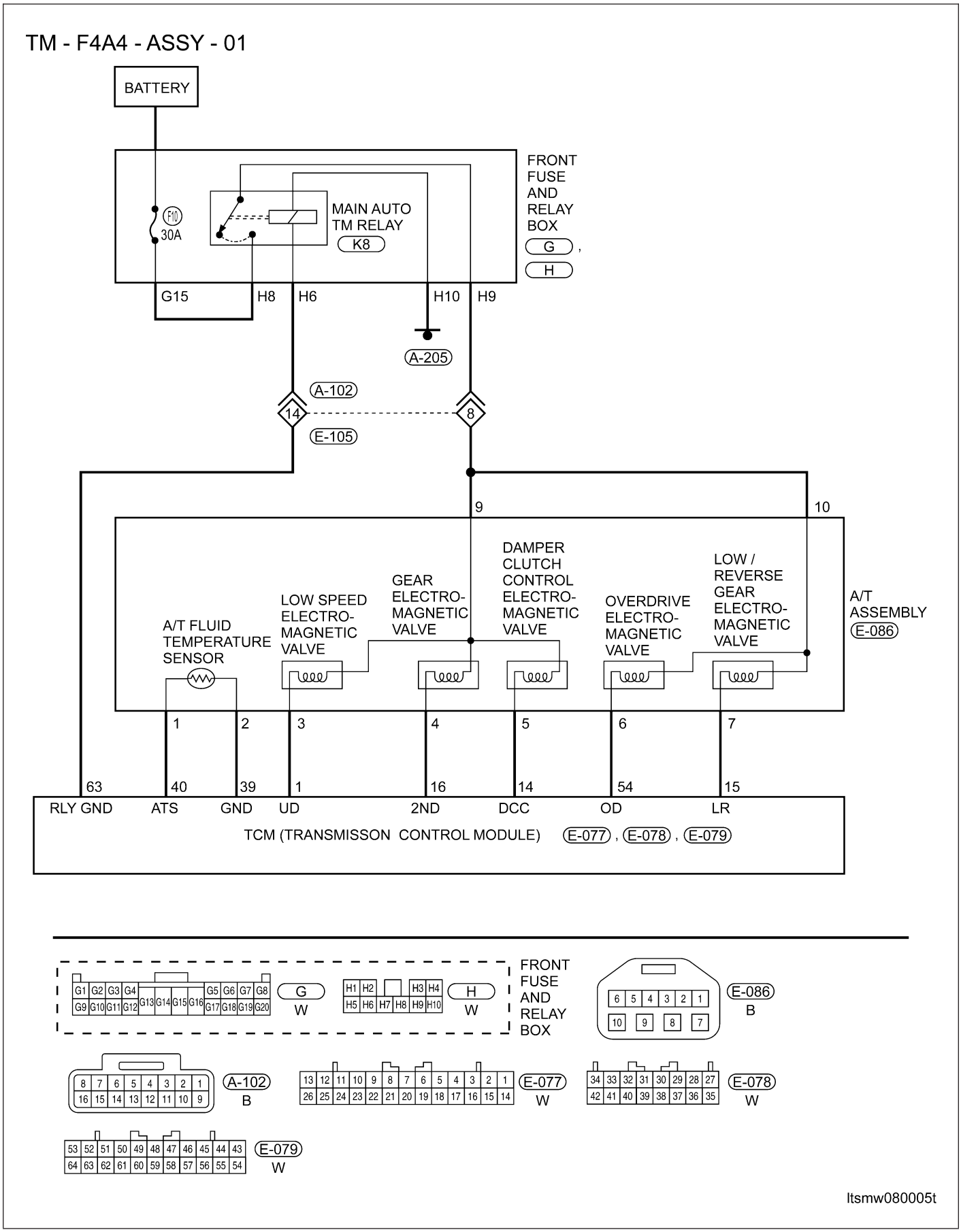

Downloaded from www.Manualslib.com manuals search engine

Operating Components Condition

- Related Operating Components

RELATED OPERATING COMPONENT										
GEARSHIFT LEVER POSITION		GEAR RATIO	ENGINE START	PARKING MECHANISM	DRIVE			LOCK		
					LOW SPEED CLUTCH (UD)	REVERSE GEAR CLUTCH (REV)	OVERSPEED CLUTCH (OD)	LOW GEAR/ REVERSE GEAR BRAKE (L/R)	GEAR 2ND BRAKE (2ND)	ONE-WAY CLUTCH (OWC)
P	Parking	-	Enabled	√	-	-	-	√	-	-
R	Reverse Gear	2.480	-	-	-	√	-	√	-	-
N	Neutral Gear	-	Enabled	-	-	-	-	√	-	-
D	Gear 1	2.842	-	-	√	-	-	√*	-	√
	Gear 2	1.529	-	-	√	-	-	-	√	-
	Gear 3	1.000	-	-	√	-	√	-	-	-
	Gear 4	0.712	-	-	√	-	√	-	√	-
3	Gear 1	2.842	-	-	√	-	-	√*	-	√
	Gear 2	1.529	-	-	√	-	-	-	√	-
	Gear 3	1.000	-	-	√	-	√	-	-	-
2	Gear 1	2.842	-	-	√	-	-	√*	-	√
	Gear 2	1.529	-	-	√	-	-	-	√	-
L	Gear 1	2.842	-	-	√	-	-	√	-	-

*** Low gear/reverse gear is applied when vehicle speed is lower than 10 km/h.**
√ Operating components

On Board Diagnostic Logic

- Self-diagnosis detection logic.

DTC NO.	DTC DEFINITION	DTC DETECTION CONDITION	DTC SET CONDITION	POSSIBLE CAUSES
41	First gear, ratio out of limits	Vehicle is driving	• The Transaxle Control Module (TCM) will set this DTC when the TCM detected that 1st Gear Ratio Error is already present. The output shaft speed signal is increased. • If the DTC was set 4 times, then the A/T will be locked in 3rd gear (D gear).	• Input shaft speed sensor • Output shaft speed sensor • The retainer of deceleration clutch • Transfer case driven and drive gear • Low/Reverse brake system • Low speed clutch system • Noise interference

DTC Confirmation Procedure:

Before performing the following procedure, confirm that battery voltage is more than 12 V.
- Connect the X-431 scan tool to the Data Link Connector (DLC) - use the most current software available.
- After connection, press POWER key to start X-431.

Downloaded from www.Manualslib.com manuals search engine

- Turn ignition switch on, with the scan tool, view and erase stored DTCs in the TCM.
- Start engine and warm it to normal operating temperature, then select ″D″ position.
- Drive the vehicle in 1st, 2nd, 3rd and 4th gears.
- With the scan tool, select view DTC and data stream.
- If the DTC is detected, the DTC condition is current. Go to Diagnostic Procedure - Step 1.
- If the DTC is not detected, the DTC condition is intermittent (See Diagnostic Help and Intermittent DTC Troubleshooting in Section 08 Transaxle & Transfer Case for more information).

NOTE :
Checking the automatic transaxle fluid quality and fluid level is the most basic check of the automatic transaxle. The fluid check is also an important inspection to determine if the transaxle will need to be disassembled.

CAUTION:
The burnt scent of ATF fluid indicates that the transaxle fluid is contaminated. The tiny particles in the fluid pan indicate that the transaxle is worn out and it will be necessary to overhaul the transaxle.

NOTE :
While performing electrical diagnosis & testing, always refer to the electrical schematics for specific circuit and component information.

Diagnostic Procedure

1. CHECK FLUID QUALITY AND FLUID LEVEL AND DTC

- Drive the vehicle, until the ATF reaches operating temperature (70° - 80°C).
- Park the vehicle on level ground.
- Shift the gear selector lever to all gear positions once, then shift to gear “N”.
- Clean and check the outside of the dipstick and remove the dipstick to check the fluid level.
- With the scan tool, select view DTC and data stream for A/T.
- Start the engine.
- Monitor the value of the gear position as indicated in the following table while driving:

GEAR POSITION	ELECTRO-MAGNETIC VALVE				
	L/R	GEAR 2	UD	OD	DCC (REF)
Gear 1	Off	On	Off	On	Off
Gear 2	On	Off	Off	On	On
Gear 3	On	Off	Off	Off	On
Gear 4	On	Off	On	Off	On
Reverse gear	Off	On	On	On	Off
Neutral gear/ Parking	Off	On	On	On	Off

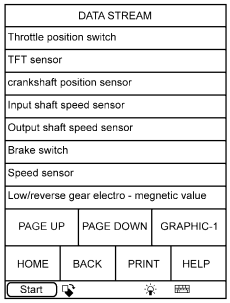

ltsmd080001t

Is DTC 22 or 23 present?

Yes >> If DTC 22 present, see diagnostic procedure for DTC 22 in 08 - Transaxle & Transfer Case.
If DTC 23 present, see diagnostic procedure for DTC 23 in 08 - Transaxle & Transfer Case.

No >> Go to the next step.

Downloaded from www.Manualslib.com manuals search engine

2. HYDRAULIC TEST

- Preheat the fluid from engine to transaxle to 80-100°C.
- Lift the vehicle until the wheels can rotate freely.
- Connect the special fluid pressure gauge on the fluid pressure test port.

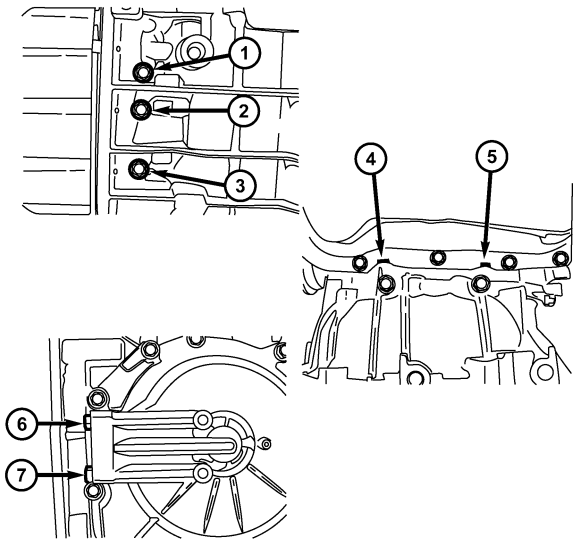

ltsmd080018

Test Port

TEST PORT	1	2	3	4	5	6	7
Fluid pressure test port name	2nd (Gear 2 Brake) fluid pressure	UD (Low Speed Clutch) fluid pressure	L/R (Low/ Reverse Gear Brake) fluid pressure	DA (Damper Clutch Engagement) fluid pressure	DR (Damper Clutch Disengagement) fluid pressure	RV (Reverse Gear Clutch) fluid pressure	OD (Overdrive Clutch) fluid pressure

MEASURE STATUS			STANDARD FLUID PRESSURE KPA (PSI)					
GEAR LEVER POSITION	GEAR POSITION	ENGINE SPEED (RPM)	DECELERATION CLUTCH PRESSURE	REVERSE GEAR CLUTCH PRESSURE	OVERDRIVE CLUTCH PRESSURE	LOW/ REVERSE GEAR CLUTCH PRESSURE	SECONDARY BRAKE PRESSURE	TORQUE CONVERTER PRESSURE
P	-	2,500	-	-	-	310 - 390 (45 - 56)	-	250 - 390 (36 - 56)
R	Reverse Gear	2,500	-	1,270 - 1,770	-	1,270 - 1,770	-	500 - 700 (73-101)
N	Neutral Gear	2,500	-	-	-	310 - 390 (45 - 56)	-	250 - 390 (36 - 56)

Downloaded from www.Manualslib.com manuals search engine

MEASURE STATUS			STANDARD FLUID PRESSURE KPA (PSI)					
GEAR LEVER POSITION	GEAR POSITION	ENGINE SPEED (RPM)	DECELERATION CLUTCH PRESSURE	REVERSE GEAR CLUTCH PRESSURE	OVERDRIVE CLUTCH PRESSURE	LOW/ REVERSE GEAR CLUTCH PRESSURE	SECONDARY BRAKE PRESSURE	TORQUE CONVERTER PRESSURE
D	Gear 1	2,500	1,010 - 1,050 (146 - 152)	-	-	1,010 - 1,050 (146 - 152)	-	500 - 700 (73 - 101)
	Gear 2	2,500	-	-	-	-	1,010 - 1,050 (146 - 152)	500 - 700 (73 - 101)
	Gear 3	2,500	590 - 690 (85 - 100)	-	590 - 690 (85 - 100)	-	-	450 - 650 (65 - 94)
	Gear 4	2,500	-	-	590 - 690 (85 - 100)	-	590 - 690 (85 - 100)	450 - 650 (65 - 94)

- In accordance with the shown status of standard fluid pressure measurement table, measure the fluid pressure of each measurement port. The measurement of each port should be within the standard range.
- If some measurement values is beyond the standard range, please refer to the fluid pressure measurement and diagnosis table for causes.

Is the check result normal?

Yes >> Go to step 5 for disc or plate abrasion.

No >> Go to the next step.

3. CHECK VALVE BODY ASSEMBLY AND FLUID PUMP AND PIPELINE

- Turn the ignition switch off.
- Disassemble and repair F4A4 automatic transaxle assembly (See Automatic Transaxle Removal & Installation in Section 08 Transaxle & Transfer Case).
- Check valve body and fluid pump and pipeline.

Is the check result normal?

Yes >> Go to the next step.

No >> Replace damaged components and low speed clutch and reverse/low brake clutch for low pressure burned.

4. COMPRESSED AIR TEST

- Check low speed clutch system: Low speed clutch piston should be active and maintain pressure when compressed air is applied to the fluid hole.
- Check reverse/low brake clutch system: Reverse/low brake clutch piston should be active and maintain pressure when compressed air is applied to the fluid hole.

Is the check result normal?

Yes >> Go to the next step for disc or plate abrasion.

No >> Replace damaged components and low speed clutch and reverse/low brake clutch for low pressure burned.

Downloaded from www.Manualslib.com manuals search engine

5. CHECK LOW SPEED CLUTCH SYSTEM

- Check low speed clutch system:
  - Check low speed clutch plate
  - Check low speed clutch disc
  - Snap ring
  - Clutch reaction disc
  - D-Ring
  - Spring retainer
  - Low speed clutch piston
  - Low speed clutch drum

Is the check result normal?

Yes >> Go to the next step.

No >> Replace the damaged components.

6. CHECK REVERSE/LOW BRAKE SYSTEM

- Check reverse/low brake system:
  - Check reverse/low brake plate
  - Check reverse/low brake disc
  - Central support
  - Snap ring
  - Clutch reaction disc
  - Spring retainer
  - Reverse/low brake piston

Is the check result normal?

Yes >> Go to the next step.

No >> Replace the damaged components.

7. CHECK DTC

- Assemble all disassembled components.
- Install the transaxle assembly (See Automatic Transaxle Removal & Installation in Section 08 Transaxle & Transfer Case).
- Fill the transaxle with new ATF:
  - Fill the ATF from the fill tube.
  - Reinstall the hose connector disassembled in step 1 and reinstall the dipstick (clean the dipstick before installing).
  - Shift the gear selector lever to each gear position and then shift to gear “N”.
  - Drive the vehicle until the ATF reaches operating temperature (70° - 80°C) and re-check the fluid level. The fluid level must be within the HOT range of dipstick.
  - Reinstall the dipstick into the transaxle.
  - With the X-431 scan tool, read TCM DTCs.
  - Refer to ″DTC Confirmation Procedure″.

Is DTC 41 still present?

Yes >> Replace the TCM.

No >> The system is now operating properly.

Downloaded from www.Manualslib.com manuals search engine

42 - Second Gear, Ratio Out Of Limits

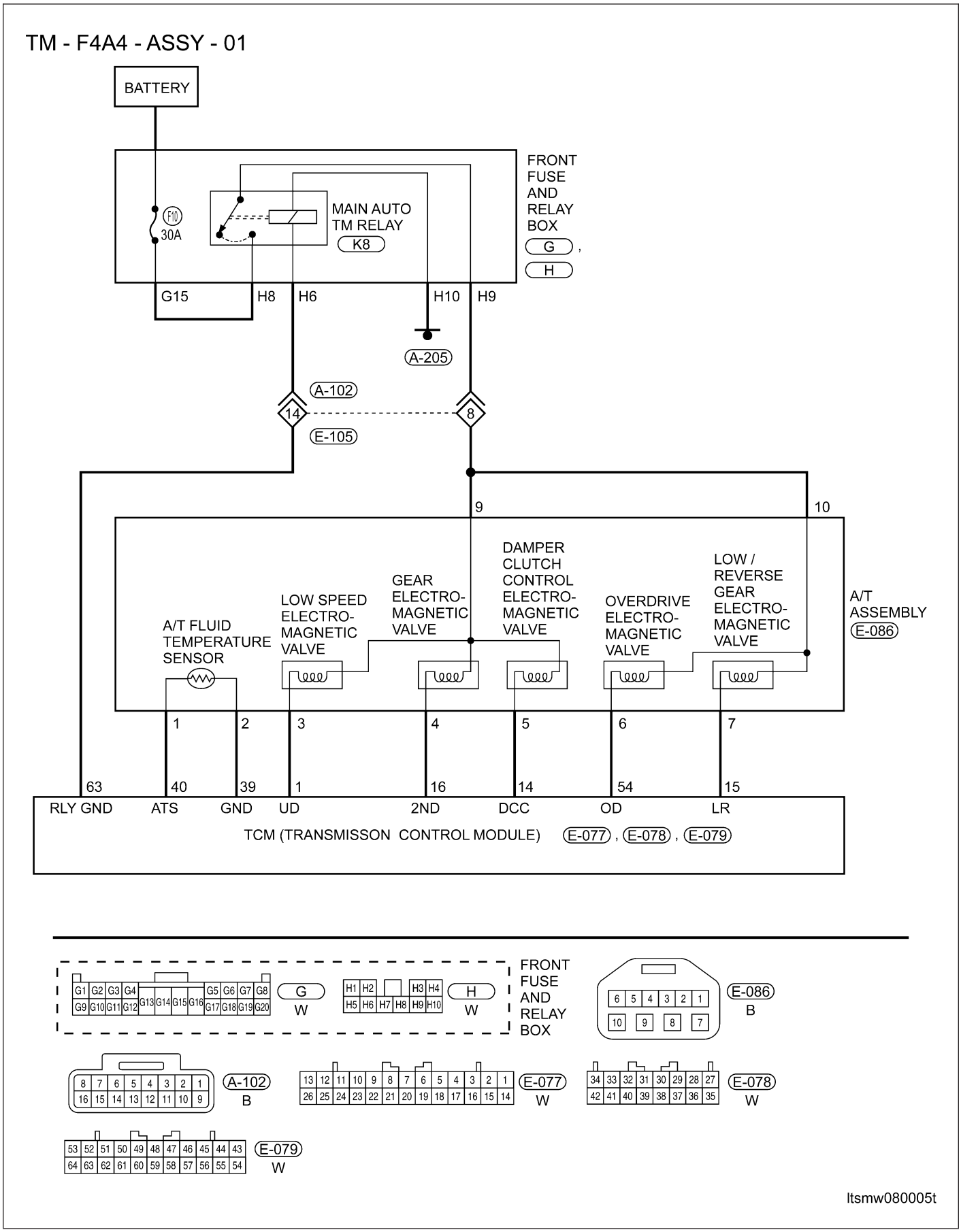

Downloaded from www.Manualslib.com manuals search engine

Operating Components Condition

- Related Operating Components

RELATED OPERATING COMPONENT										
GEARSHIFT LEVER POSITION		GEAR RATIO	ENGINE START	PARKING MECHANISM	DRIVE			LOCK		
					LOW SPEED CLUTCH (UD)	REVERSE GEAR CLUTCH (REV)	OVERSPEED CLUTCH (OD)	LOW GEAR/ REVERSE GEAR BRAKE (L/R)	GEAR 2ND BRAKE (2ND)	ONE-WAY CLUTCH (OWC)
P	Parking	-	Enabled	√	-	-	-	√	-	-
R	Reverse Gear	2.480	-	-	-	√	-	√	-	-
N	Neutral Gear	-	Enabled	-	-	-	-	√	-	-
D	Gear 1	2.842	-	-	√	-	-	√*	-	√
	Gear 2	1.529	-	-	√	-	-	-	√	-
	Gear 3	1.000	-	-	√	-	√	-	-	-
	Gear 4	0.712	-	-	√	-	√	-	√	-
3	Gear 1	2.842	-	-	√	-	-	√*	-	√
	Gear 2	1.529	-	-	√	-	-	-	√	-
	Gear 3	1.000	-	-	√	-	√	-	-	-
2	Gear 1	2.842	-	-	√	-	-	√*	-	√
	Gear 2	1.529	-	-	√	-	-	-	√	-
L	Gear 1	2.842	-	-	√	-	-	√	-	-

*** Low gear/reverse gear is applied when vehicle speed is lower than 10 km/h.**
√ Operating components

On Board Diagnostic Logic

- Self-diagnosis detection logic.

DTC NO.	DTC DEFINITION	DTC DETECTION CONDITION	DTC SET CONDITION	POSSIBLE CAUSES
42	Second gear, ratio out of limits	Vehicle is driving	• The Transaxle Control Module (TCM) will set this DTC when the TCM detected that 2nd Gear Ratio Error is already present. The output shaft speed signal is increased. • If the DTC was set 4 times, then the A/T will be locked in 3rd gear (D gear).	• Input shaft speed sensor • Output shaft speed sensor • The retainer of deceleration clutch • Transfer case driven and drive gear • 2nd gear brake system • Low speed clutch system • Noise interference

DTC Confirmation Procedure:

Before performing the following procedure, confirm that battery voltage is more than 12 V.
- Connect the X-431 scan tool to the Data Link Connector (DLC) - use the most current software available.
- After connection, press POWER key to start X-431.

Downloaded from www.Manualslib.com manuals search engine

- Turn ignition switch on, with the scan tool, view and erase stored DTCs in the TCM.
- Start engine and warm it to normal operating temperature, then select ″D″ position.
- Drive the vehicle in 1st, 2nd, 3rd and 4th gears.
- With the scan tool, select view DTC and data stream.
- If the DTC is detected, the DTC condition is current. Go to Diagnostic Procedure - Step 1.
- If the DTC is not detected, the DTC condition is intermittent (See Diagnostic Help and Intermittent DTC Troubleshooting in Section 08 Transaxle & Transfer Case for more information).

NOTE :
Checking the automatic transaxle fluid quality and fluid level is the most basic check of the automatic transaxle. The fluid check is also an important inspection to determine if the transaxle will need to be disassembled.

CAUTION:
The burnt scent of ATF fluid indicates that the transaxle fluid is contaminated. The tiny particles in the fluid pan indicate that the transaxle is worn out and it will be necessary to overhaul the transaxle.

NOTE :
While performing electrical diagnosis & testing, always refer to the electrical schematics for specific circuit and component information.

Diagnostic Procedure

1. CHECK FLUID QUALITY AND FLUID LEVEL AND DTC

- Drive the vehicle, until the ATF reaches operating temperature (70° - 80°C).
- Park the vehicle on level ground.
- Shift the gear selector lever to all gear positions once, then shift to gear “N”.
- Clean and check the outside of the dipstick and remove the dipstick to check the fluid level.
- With the scan tool, select view DTC and data stream for A/T.
- Start the engine.
- Monitor the value of the gear position as indicated in the following table while driving:

GEAR POSITION	ELECTRO-MAGNETIC VALVE				
	L/R	GEAR 2	UD	OD	DCC (REF)
Gear 1	Off	On	Off	On	Off
Gear 2	On	Off	Off	On	On
Gear 3	On	Off	Off	Off	On
Gear 4	On	Off	On	Off	On
Reverse gear	Off	On	On	On	Off
Neutral gear/ Parking	Off	On	On	On	Off

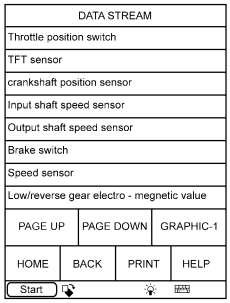

ltsmd080001t

Is DTC 22 or 23 present?

Yes >> If DTC 22 present, see diagnostic procedure for DTC 22 in 08 - Transaxle & Transfer Case
If DTC 23 present, see diagnostic procedure for DTC 23 in 08 - Transaxle & Transfer Case.

No >> Go to the next step.

Downloaded from www.Manualslib.com manuals search engine

2. HYDRAULIC TEST

- Preheat the fluid from engine to transaxle to 80° - 100°C.
- Lift the vehicle until the wheels can rotate freely.
- Connect the special fluid pressure gauge on the fluid pressure test port.

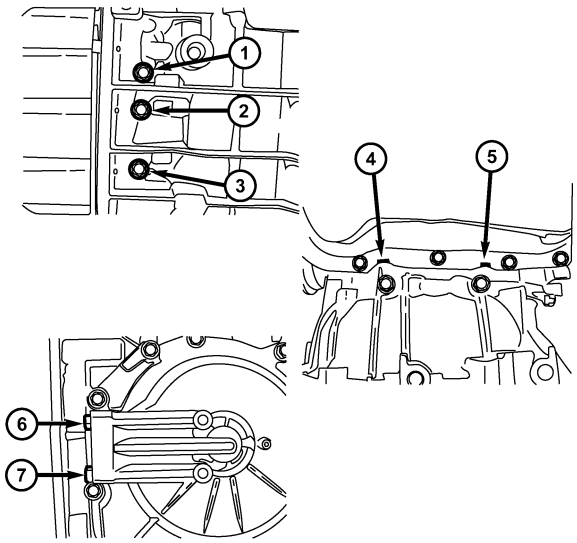

ltsmd080018

TEST PORT	1	2	3	4	5	6	7
Fluid pressure test port name	2nd (Gear 2 Brake) fluid pressure	UD (Low Speed Clutch) fluid pressure	L/R (Low/ Reverse Gear Brake) fluid pressure	DA (Damper Clutch Engagement) fluid pressure	DR (Damper Clutch Disengagement) fluid pressure	RV (Reverse Gear Clutch) fluid pressure	OD (Overdrive Clutch) fluid pressure

Downloaded from www.Manualslib.com manuals search engine

MEASURE STATUS			STANDARD FLUID PRESSURE KPA (PSI)					
GEAR LEVER POSITION	GEAR POSITION	ENGINE SPEED (RPM)	DECELERATION CLUTCH PRESSURE	REVERSE GEAR CLUTCH PRESSURE	OVERDRIVE CLUTCH PRESSURE	LOW/ REVERSE GEAR CLUTCH PRESSURE	SECONDARY BRAKE PRESSURE	TORQUE CONVERTER PRESSURE
P	-	2,500	-	-	-	310 - 390 (45-56)	-	250 - 390 (36 - 56)
R	Reverse Gear	2,500	-	1,270 - 1,770	-	1,270 - 1,770	-	500 - 700 (73 - 101)
N	Neutral Gear	2,500	-	-	-	310 - 390 (45 - 56)	-	250 - 390 (36 - 56)
D	Gear 1	2,500	1,010 - 1,050 (146 - 152)	-	-	1,010 - 1,050 (146 - 152)	-	500 - 700 (73 - 101)
	Gear 2	2,500	-	-	-	-	1,010 - 1,050 (146 - 152)	500 - 700 (73 - 101)
	Gear 3	2,500	590 - 690 (85 - 100)	-	590 - 690 (85 - 100)	-	-	450 - 650 (65 - 94)
	Gear 4	2,500	-	-	590 - 690 (85 - 100)	-	590 - 690 (85 - 100)	450 - 650 (65 - 94)

- In accordance with the shown status of standard fluid pressure measurement table, measure the fluid pressure of each measurement port. The measurement of each port should be within the standard range.
- If some measurement values is beyond the standard range, please refer to the fluid pressure measurement and diagnosis table for causes.

Is the check result normal?

Yes >> Go to step 5 for disc or plate abrasion.

No >> Go to the next step.

3. CHECK VALVE BODY ASSEMBLY AND FLUID PUMP AND PIPELINE

- Turn the ignition switch off.
- Disassemble and repair F4A4 automatic transaxle assembly (See Automatic Transaxle Removal & Installation in Section 08 Transaxle & Transfer Case).
- Check valve body and fluid pump and pipeline.

Is the check result normal?

Yes >> Go to the next step.

No >> Replace damaged components and low speed clutch and 2nd gear brake clutch for low pressure burned.

4. COMPRESSED AIR TEST

- Check low speed clutch system: Low speed clutch piston should be active and maintain pressure when compressed air is applied to the fluid hole.
- Check 2nd gear brake clutch system: 2nd gear brake clutch piston should be active and maintain pressure when compressed air is applied to the fluid hole.

Is the check result normal?

Yes >> Go to the next step for disc or plate abrasion.

No >> Replace all damaged components and low speed clutch and 2nd gear brake clutch.

Downloaded from www.Manualslib.com manuals search engine

5. CHECK LOW SPEED CLUTCH SYSTEM

- Check low speed clutch system:
  - Check low speed clutch plate
  - Check low speed clutch disc
  - Snap ring
  - Clutch reaction disc
  - D-Ring
  - Spring retainer
  - Low speed clutch piston
  - Low speed clutch drum

Is the check result normal?

Yes >> Go to the next step.

No >> Replace the damaged components.

6. CHECK 2ND GEAR BRAKE SYSTEM

- Check 2nd gear brake system:
  - Check 2nd gear brake plate
  - Check 2nd gear brake disc
  - Central support
  - Snap ring
  - Clutch reaction disc
  - Spring retainer
  - 2nd gear brake piston

Is the check result normal?

Yes >> Go to the next step.

No >> Replace the damaged components.

7. CHECK DTC

- Assemble all disassembled components.
- Install the transaxle assembly (See Automatic Transaxle Removal & Installation in Section 08 Transaxle & Transfer Case).
- Fill the transaxle with new ATF:
  - Fill the ATF from the fill tube.
  - Reinstall the hose connector disassembled in step 1 and reinstall the dipstick (clean the dipstick before installing).
  - Shift the gear selector lever to each gear position and then shift to gear “N”.
  - Drive the vehicle until the ATF reaches operating temperature (70° - 80°C) and re-check the fluid level. The fluid level must be within the HOT range of dipstick.
  - Reinstall the dipstick into the transaxle.
  - With the X-431 scan tool, read TCM DTCs.
  - Refer to ″DTC Confirmation Procedure″.

Is DTC 42 present?

Yes >> Replace the TCM.

No >> The system is now operating properly.

Downloaded from www.Manualslib.com manuals search engine

43 - Third Gear, Ratio Out Of Limits

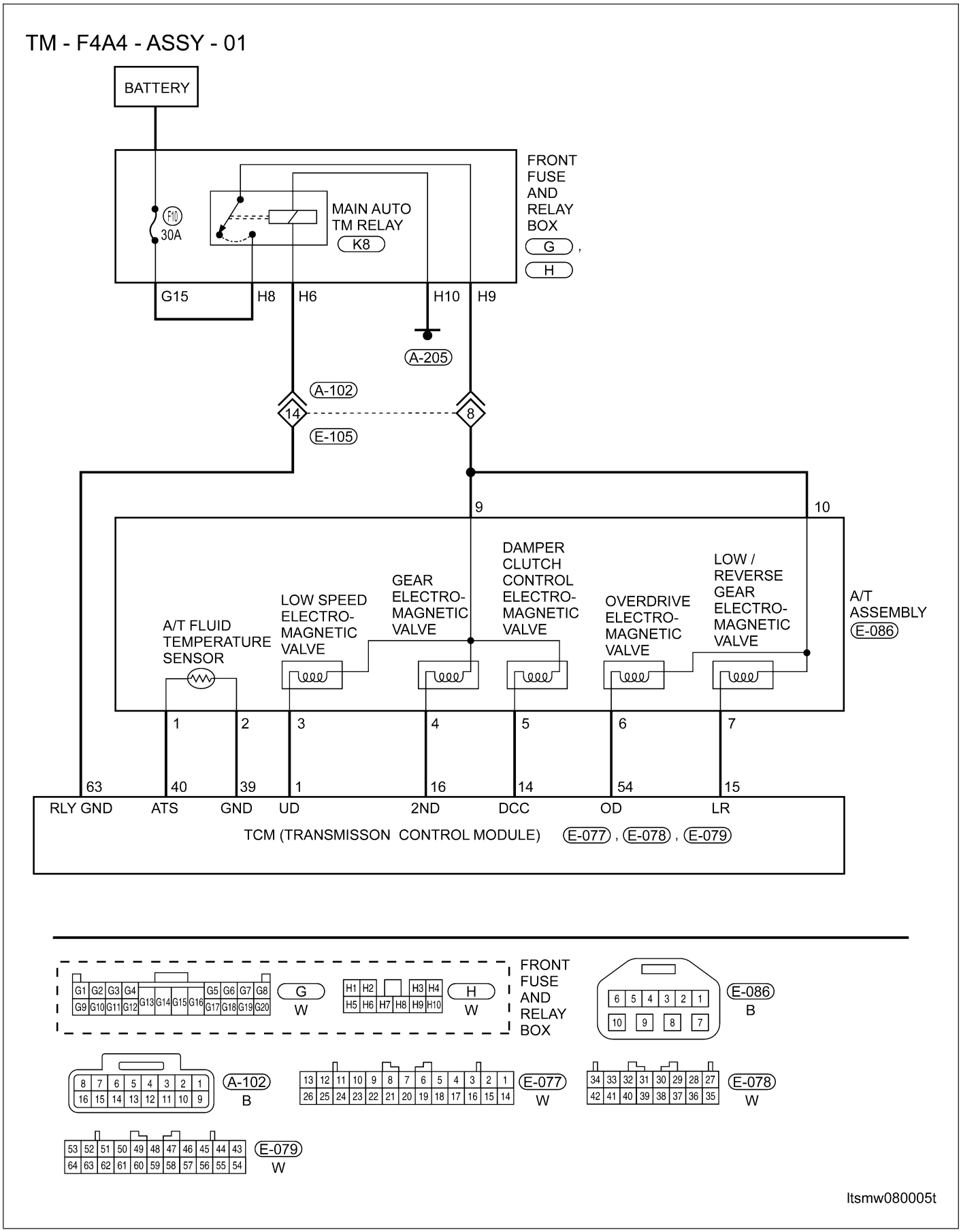

Downloaded from www.Manualslib.com manuals search engine

Operating Components Condition

- Related Operating Components

RELATED OPERATING COMPONENT										
GEARSHIFT LEVER POSITION		GEAR RATIO	ENGINE START	PARKING MECHANISM	DRIVE			LOCK		
					LOW SPEED CLUTCH (UD)	REVERSE GEAR CLUTCH (REV)	OVERSPEED CLUTCH (OD)	LOW GEAR/ REVERSE GEAR BRAKE (L/R)	GEAR 2ND BRAKE (2ND)	ONE-WAY CLUTCH (OWC)
P	Parking	-	Enabled	√	-	-	-	√	-	-
R	Reverse Gear	2.480	-	-	-	√	-	√	-	-
N	Neutral Gear	-	Enabled	-	-	-	-	√	-	-
D	Gear 1	2.842	-	-	√	-	-	√*	-	√
	Gear 2	1.529	-	-	√	-	-	-	√	-
	Gear 3	1.000	-	-	√	-	√	-	-	-
	Gear 4	0.712	-	-	√	-	√	-	√	-
3	Gear 1	2.842	-	-	√	-	-	√*	-	√
	Gear 2	1.529	-	-	√	-	-	-	√	-
	Gear 3	1.000	-	-	√	-	√	-	-	-
2	Gear 1	2.842	-	-	√	-	-	√*	-	√
	Gear 2	1.529	-	-	√	-	-	-	√	-
L	Gear 1	2.842	-	-	√	-	-	√	-	-

*** Low gear/reverse gear is applied when vehicle speed is lower than 10 km/h.**
√ Operating components

On Board Diagnostic Logic

- Self-diagnosis detection logic.

DTC NO.	DTC DEFINITION	DTC DETECTION CONDITION	DTC SET CONDITION	POSSIBLE CAUSES
43	Third gear, ratio out of limits	Vehicle is driving	• The Transaxle Control Module (TCM) will set this DTC when the TCM detected that 3rd Gear Ratio Error is already present. The output shaft speed signal is increased. • If the DTC was set 4 times, then the A/T will be locked in 3rd gear (D gear).	• Input shaft speed sensor • Output shaft speed sensor • The retainer of deceleration clutch • Transfer case driven and drive gear • Overdrive clutch system • Low speed clutch system • Noise interference

DTC Confirmation Procedure:

Before performing the following procedure, confirm that battery voltage is more than 12 V.
- Connect the X-431 scan tool to the Data Link Connector (DLC) - use the most current software available.
- After connection, press POWER key to start X-431.

Downloaded from www.Manualslib.com manuals search engine

- Turn ignition switch on, with the scan tool, view and erase stored DTCs in the TCM.
- Start engine and warm it to normal operating temperature, then select ″D″ position.
- Drive the vehicle in 1st, 2nd, 3rd and 4th gears.
- With the scan tool, select view DTC and data stream.
- If the DTC is detected, the DTC condition is current. Go to Diagnostic Procedure - Step 1.
- If the DTC is not detected, the DTC condition is intermittent (See Diagnostic Help and Intermittent DTC Troubleshooting in Section 08 Transaxle & Transfer Case for more information).

NOTE :
Checking the automatic transaxle fluid quality and fluid level is the most basic check of the automatic transaxle. The fluid check is also an important inspection to determine if the transaxle will need to be disassembled.

CAUTION:
The burnt scent of ATF fluid indicates that the transaxle fluid is contaminated. The tiny particles in the fluid pan indicate that the transaxle is worn and it will be necessary to overhaul the transaxle.

NOTE :
While performing electrical diagnosis & testing, always refer to the electrical schematics for specific circuit and component information.

Diagnostic Procedure

1. CHECK FLUID QUALITY AND FLUID LEVEL AND DTC

- Drive the vehicle, until the ATF reaches operating temperature (70° - 80°C).
- Park the vehicle on level ground.
- Shift the gear selector lever to all gear positions once, then shift to gear “N”.
- Clean and check the outside of the dipstick and remove the dipstick to check the fluid level.
- With the scan tool, select view DTC and data stream for A/T.
- Start the engine.
- Monitor the value of the gear position as indicated in the following table while driving:

GEAR POSITION	ELECTRO-MAGNETIC VALVE				
	L/R	GEAR 2	UD	OD	DCC (REF)
Gear 1	Off	On	Off	On	Off
Gear 2	On	Off	Off	On	On
Gear 3	On	Off	Off	Off	On
Gear 4	On	Off	On	Off	On
Reverse gear	Off	On	On	On	Off
Neutral gear/ Parking	Off	On	On	On	Off

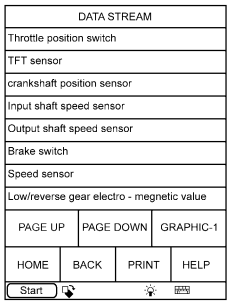

ltsmd080001t

Is DTC 22 or 23 present?

Yes >> If DTC 22 present, See diagnostic procedure for DTC 22 in 08 - Transaxle & Transfer Case.
If DTC 23 present, See diagnostic procedure for DTC 23 in 08 - Transaxle & Transfer Case.

No >> Go to the next step.

Downloaded from www.Manualslib.com manuals search engine

2. HYDRAULIC TEST

- Preheat the fluid from engine to transaxle to 80°-100°C.
- Lift the vehicle until the wheels can rotate freely.
- Connect the special fluid pressure gauge to the fluid pressure test port.

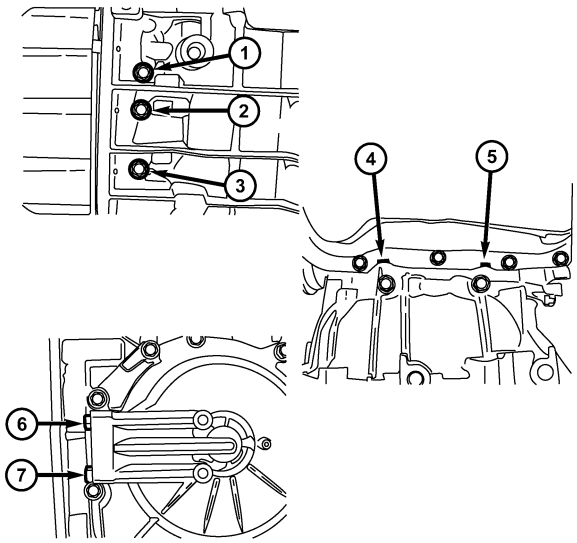

ltsmd080018

TEST PORT	1	2	3	4	5	6	7
Fluid pressure test port name	2nd (Gear 2 Brake) fluid pressure	UD (Low Speed Clutch) fluid pressure	L/R (Low/ Reverse Gear Brake) fluid pressure	DA (Damper Clutch Engagement) fluid pressure	DR (Damper Clutch Disengagement) fluid pressure	RV (Reverse Gear Clutch) fluid pressure	OD (Overdrive Clutch) fluid pressure

Downloaded from www.Manualslib.com manuals search engine

MEASURE STATUS			STANDARD FLUID PRESSURE KPA (PSI)					
GEAR LEVER POSITION	GEAR POSITION	ENGINE SPEED (RPM)	DECELERATION CLUTCH PRESSURE	REVERSE GEAR CLUTCH PRESSURE	OVERDRIVE CLUTCH PRESSURE	LOW/ REVERSE GEAR CLUTCH PRESSURE	SECONDARY BRAKE PRESSURE	TORQUE CONVERTER PRESSURE
P	-	2,500	-	-	-	310 - 390 (45-56)	-	250 - 390 (36 - 56)
R	Reverse Gear	2,500	-	1,270 - 1,770	-	1,270 - 1,770	-	500 - 700 (73 - 101)
N	Neutral Gear	2,500	-	-	-	310 - 390 (45 - 56)	-	250 - 390 (36 - 56)
D	Gear 1	2,500	1,010 - 1,050 (146 - 152)	-	-	1,010 - 1,050 (146 - 152)	-	500 - 700 (73 - 101)
	Gear 2	2,500	-	-	-	-	1,010 - 1,050 (146 - 152)	500 - 700 (73 - 101)
	Gear 3	2,500	590 - 690 (85 - 100)	-	590 - 690 (85 - 100)	-	-	450 - 650 (65 - 94)
	Gear 4	2,500	-	-	590 - 690 (85 - 100)	-	590 - 690 (85 - 100)	450 - 650 (65 - 94)

- In accordance with the shown status of standard fluid pressure measurement table, measure the fluid pressure of each measurement port. The measurement of each port should be within the standard range.
- If some measurement values is beyond the standard range, please refer to the fluid pressure measurement and diagnosis table for causes.

Is the check result normal?

Yes >> Go to step 5 for disc or plate abrasion.

No >> Go to the next step.

3. CHECK VALVE BODY ASSEMBLY AND FLUID PUMP AND PIPELINE

- Turn the ignition switch off.
- Disassemble and repair F4A4 automatic transaxle assembly (See Automatic Transaxle Removal & Installation in Section 08 Transaxle & Transfer Case).
- Check valve body and fluid pump and pipeline.

Is the check result normal?

Yes >> Go to the next step.

No >> Replace damaged components and low speed clutch and overdrive clutch for low pressure burned.

4. COMPRESSED AIR TEST

- Check low speed clutch system: Low speed clutch piston should be active and maintain pressure when compressed air is applied to the fluid hole.
- Check overdrive clutch system: Overdrive clutch piston should be active and maintain pressure when compressed air is applied to the fluid hole.

Is the check result normal?

Yes >> Go to the next step for disc or plate abrasion.

No >> Replace damaged components and low speed clutch and overdrive clutch for low pressure burned.

Downloaded from www.Manualslib.com manuals search engine

5. CHECK LOW SPEED CLUTCH SYSTEM

- Stop vehicle and turn ignition switch off.
- Disassemble and repair F4A4 automatic transaxle assembly (See Automatic Transaxle Removal & Installation in Section 08 Transaxle & Transfer Case).
- Check low speed clutch system:
  - Check low speed clutch plate
  - Check low speed clutch disc
  - Snap ring
  - Clutch reaction disc
  - D-Ring
  - Spring retainer
  - Low speed clutch piston
  - Low speed clutch drum

Is the check result normal?

Yes >> Go to the next step.

No >> Replace the damaged components.

6. CHECK OVERDRIVE CLUTCH SYSTEM

- Check overdrive clutch system:
  - Check overdrive clutch plate
  - Check overdrive clutch disc
  - Central support
  - Snap ring
  - Clutch reaction disc
  - Spring retainer
  - Overdrive clutch piston

Is the check result normal?

Yes >> Go to the next step.

No >> Replace the damaged components.

7. CHECK DTC

- Assemble all disassembled components.
- Install the transaxle assembly (See Automatic Transaxle Removal & Installation in Section 08 Transaxle & Transfer Case).
- Fill the transaxle with new ATF:
  - Fill the ATF from the fill tube.
  - Reinstall the hose connector disassembled in step 1 and reinstall the dipstick (clean the dipstick before installing).
  - Shift the gear selector lever to each gear position and then shift to gear “N”.
  - Drive the vehicle until the ATF reaches operating temperature (70° - 80°C) and re-check the fluid level. The fluid level must be within the HOT range of dipstick.
  - Reinstall the dipstick into the transaxle.
  - With the X-431 scan tool, read TCM DTCs.
  - Refer to ″DTC Confirmation Procedure″.

Is DTC 43 present?

Yes >> Replace the TCM.

No >> The system is now operating properly.

Downloaded from www.Manualslib.com manuals search engine

44 - Fourth Gear, Ratio Out Of Limits

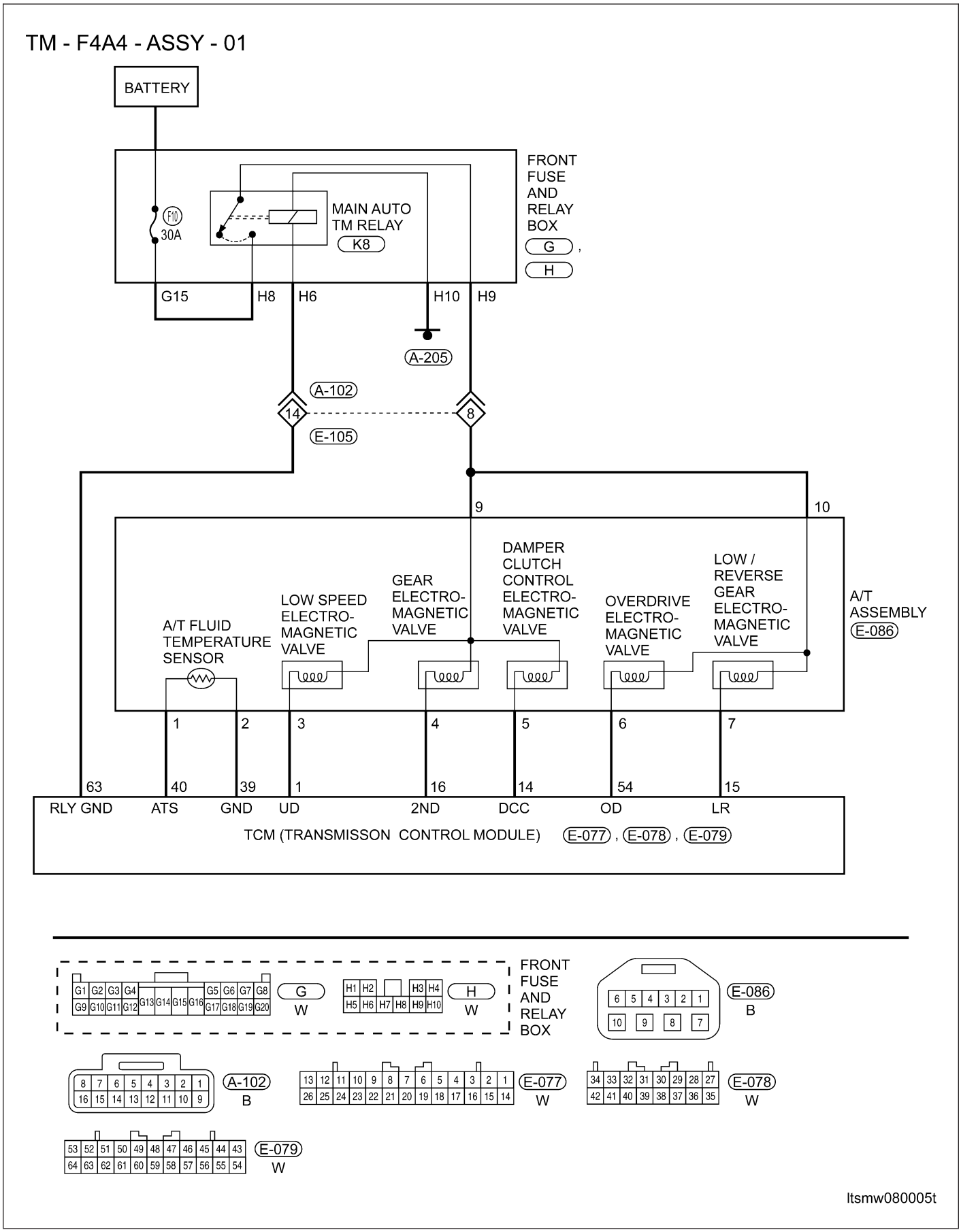

Downloaded from www.Manualslib.com manuals search engine

Operating Components Condition

- Related Operating Components

RELATED OPERATING COMPONENT										
GEARSHIFT LEVER POSITION		GEAR RATIO	ENGINE START	PARKING MECHANISM	DRIVE			LOCK		
					LOW SPEED CLUTCH (UD)	REVERSE GEAR CLUTCH (REV)	OVERSPEED CLUTCH (OD)	LOW GEAR/ REVERSE GEAR BRAKE (L/R)	GEAR 2ND BRAKE (2ND)	ONE-WAY CLUTCH (OWC)
P	Parking	-	Enabled	√	-	-	-	√	-	-
R	Reverse Gear	2.480	-	-	-	√	-	√	-	-
N	Neutral Gear	-	Enabled	-	-	-	-	√	-	-
D	Gear 1	2.842	-	-	√	-	-	√*	-	√
	Gear 2	1.529	-	-	√	-	-	-	√	-
	Gear 3	1.000	-	-	√	-	√	-	-	-
	Gear 4	0.712	-	-	√	-	√	-	√	-
3	Gear 1	2.842	-	-	√	-	-	√*	-	√
	Gear 2	1.529	-	-	√	-	-	-	√	-
	Gear 3	1.000	-	-	√	-	√	-	-	-
2	Gear 1	2.842	-	-	√	-	-	√*	-	√
	Gear 2	1.529	-	-	√	-	-	-	√	-
L	Gear 1	2.842	-	-	√	-	-	√	-	-

*** Low gear/reverse gear is applied when vehicle speed is lower than 10 km/h.**
√ Operating components

On Board Diagnostic Logic

- Self-diagnosis detection logic.

DTC NO.	DTC DEFINITION	DTC DETECTION CONDITION	DTC SET CONDITION	POSSIBLE CAUSES
44	Fourth gear, ratio out of limits	Vehicle is driving	• The Transaxle Control Module (TCM) will set this DTC when the TCM detected that 4th Gear Ratio Error is already present. The output shaft speed signal is increased. • If the DTC was set 4 times, then the A/T will be locked in 3rd gear (D gear).	• Input shaft speed sensor • Output shaft speed sensor • The retainer of deceleration clutch • Transfer case driven and drive gear • Low speed clutch system • Overdrive clutch system • 2nd brake system • Noise interference

DTC Confirmation Procedure:

Before performing the following procedure, confirm that battery voltage is more than 12 V.

- Connect the X-431 scan tool to the Data Link Connector (DLC) - use the most current software available.

Downloaded from www.Manualslib.com manuals search engine

- After connection, press POWER key to start X-431.
- Turn ignition switch on, with the scan tool, view and erase stored DTCs in the TCM.
- Start engine and warm it to normal operating temperature, then select ″D″ position.
- Drive the vehicle in 1st, 2nd, 3rd and 4th gears.
- With the scan tool, select view DTC and data stream.
- If the DTC is detected, the DTC condition is current. Go to Diagnostic Procedure - Step 1.
- If the DTC is not detected, the DTC condition is intermittent (See Diagnostic Help and Intermittent DTC Troubleshooting in Section 08 Transaxle & Transfer Case for more information).

NOTE: Checking the automatic transaxle fluid quality and fluid level is the most basic check of the automatic transaxle. The fluid check is also an important inspection to determine if the transaxle will need to be disassembled.

CAUTION:

The burnt scent of ATF fluid indicates that the transaxle fluid is contaminated. The tiny particles in the fluid pan indicate that the transaxle is worn out and it will be necessary to overhaul the transaxle.

NOTE: While performing electrical diagnosis & testing, always refer to the electrical schematics for specific circuit and component information.

Diagnostic Procedure

1. CHECK FLUID QUALITY AND FLUID LEVEL AND DTC

- Drive the vehicle, until the ATF reaches operating temperature (70° - 80°C).
- Park the vehicle on level ground.
- Shift the gear selector lever to all gear positions once, then shift to gear “N”.
- Clean and check the outside of the dipstick and remove the dipstick to check the fluid level.
- With the scan tool, select view DTC and data stream for A/T.
- Start the engine.
- Monitor the value of the gear position as indicated in the following table while driving:

GEAR POSITION	ELECTRO-MAGNETIC VALVE				
	L/R	GEAR 2	UD	OD	DCC (REF)
Gear 1	Off	On	Off	On	Off
Gear 2	On	Off	Off	On	On
Gear 3	On	Off	Off	Off	On
Gear 4	On	Off	On	Off	On
Reverse gear	Off	On	On	On	Off
Neutral gear/ Parking	Off	On	On	On	Off

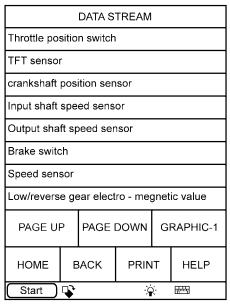

ltsmd080001t

Is DTC 22 or 23 present?

Yes >> If DTC 22 present, See diagnostic procedure for DTC 22 in 08 - Transaxle & Transfer Case.
If DTC 23 present, See diagnostic procedure for DTC 23 in 08 - Transaxle & Transfer Case.

No >> Go to the next step.

Downloaded from www.Manualslib.com manuals search engine

2. HYDRAULIC TEST

- Preheat the fluid from engine to transaxle to 80°-100°C.
- Lift the vehicle until the wheels can rotate freely.
- Connect the special fluid pressure gauge on the fluid pressure test port.

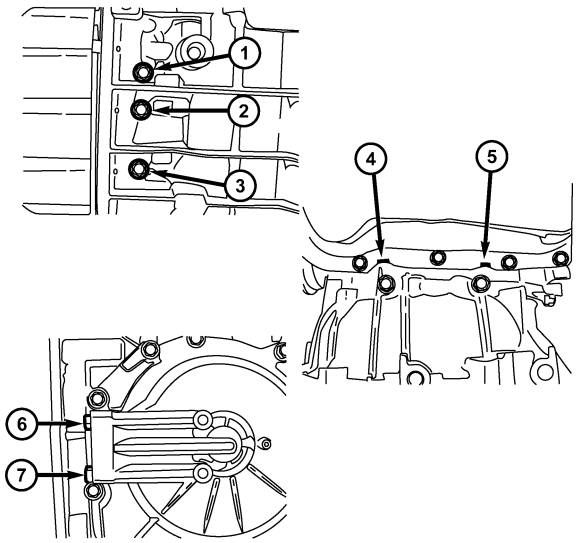

ltsmd080018

TEST PORT	1	2	3	4	5	6	7
Fluid pressure test port name	2nd (Gear 2 Brake) fluid pressure	UD (Low Speed Clutch) fluid pressure	L/R (Low/ Reverse Gear Brake) fluid pressure	DA (Damper Clutch Engagement) fluid pressure	DR (Damper Clutch Disengagement) fluid pressure	RV (Reverse Gear Clutch) fluid pressure	OD (Overdrive Clutch) fluid pressure

Downloaded from www.Manualslib.com manuals search engine

MEASURE STATUS			STANDARD FLUID PRESSURE KPA (PSI)					
GEAR LEVER POSITION	GEAR POSITION	ENGINE SPEED (RPM)	DECELERATION CLUTCH PRESSURE	REVERSE GEAR CLUTCH PRESSURE	OVERDRIVE CLUTCH PRESSURE	LOW/ REVERSE GEAR CLUTCH PRESSURE	SECONDARY BRAKE PRESSURE	TORQUE CONVERTER PRESSURE
P	-	2,500	-	-	-	310 - 390 (45-56)	-	250 - 390 (36 - 56)
R	Reverse Gear	2,500	-	1,270 - 1,770	-	1,270 - 1,770	-	500 - 700 (73 - 101)
N	Neutral Gear	2,500	-	-	-	310 - 390 (45 - 56)	-	250 - 390 (36 - 56)
D	Gear 1	2,500	1,010 - 1,050 (146 - 152)	-	-	1,010 - 1,050 (146 - 152)	-	500 - 700 (73 - 101)
	Gear 2	2,500	-	-	-	-	1,010 - 1,050 (146 - 152)	500 - 700 (73 - 101)
	Gear 3	2,500	590 - 690 (85 - 100)	-	590 - 690 (85 - 100)	-	-	450 - 650 (65 - 94)
	Gear 4	2,500	-	-	590 - 690 (85 - 100)	-	590 - 690 (85 - 100)	450 - 650 (65 - 94)

- In accordance with the shown status of standard fluid pressure measurement table, measure the fluid pressure of each measurement port. The measurement of each port should be within the standard range.
- If some measurement values is beyond the standard range, please refer to the fluid pressure measurement and diagnosis table for causes.

Is the check result normal?

Yes >> Go to step 5 for disc or plate abrasion.

No >> Go to the next step.

3. CHECK VALVE BODY ASSEMBLY AND FLUID PUMP AND PIPELINE

- Turn the ignition switch off.
- Disassemble and repair F4A4 automatic transaxle assembly (See Automatic Transaxle Removal & Installation in Section 08 Transaxle & Transfer Case).
- Check valve body and fluid pump and pipeline.

Is the check result normal?

Yes >> Go to the next step.

No >> Replace damaged components and 2nd gear brake clutch and overdrive clutch for low pressure burned.

4. COMPRESSED AIR TEST

- Check 2nd gear brake clutch system: 2nd gear brake clutch piston should be active and maintain pressure when compressed air is applied to the fluid hole.
- Check overdrive clutch system: overdrive clutch piston should be active and maintain pressure when compressed air is applied to the fluid hole.

Is the check result normal?

Yes >> Go to the next step for disc or plate abrasion.

No >> Replace damaged components and 2nd gear brake clutch and overdrive clutch for low pressure burned.

Downloaded from www.Manualslib.com manuals search engine

5. CHECK 2ND GEAR BRAKE SYSTEM

- Check 2nd gear brake system:
  - Check 2nd gear brake plate
  - Check 2nd gear brake disc
  - Central support
  - Snap ring
  - Clutch reaction disc
  - Spring retainer
  - 2nd gear brake piston

Is the check result normal?

Yes >> Go to the next step.

No >> Replace the damaged components.

6. CHECK OVERDRIVE CLUTCH SYSTEM

- Check overdrive clutch system:
  - Check overdrive clutch plate
  - Check overdrive clutch disc
  - Central Support
  - Snap Ring
  - Clutch Reaction Disc
  - Spring Retainer
  - overdrive clutch piston

Is the check result normal?

Yes >> Go to the next step.

No >> Replace the damaged components.

7. CHECK DTC

- Assemble all disassembled components.
- Install the transaxle assembly (See Automatic Transaxle Removal & Installation in Section 08 Transaxle & Transfer Case).
- Fill the transaxle with new ATF:
  - Fill the ATF from the fill tube.
  - Reinstall the hose connector disassembled in step 1 and reinstall the dipstick (clean the dipstick before installing).
  - Shift the gear selector lever to each gear position and then shift to gear “N”.
  - Drive the vehicle until the ATF reaches operating temperature (70° - 80°C) and re-check the fluid level. The fluid level must be within the HOT range of dipstick.
  - Reinstall the dipstick into the transaxle.
  - With the X-431 scan tool, read TCM DTCs.
  - Refer to ″DTC Confirmation Procedure″.

Is DTC 44 present?

Yes >> Replace the TCM.

No >> The system is now operating properly.

Downloaded from www.Manualslib.com manuals search engine

46 - Reverse Gear, Ratio Out Of Limits

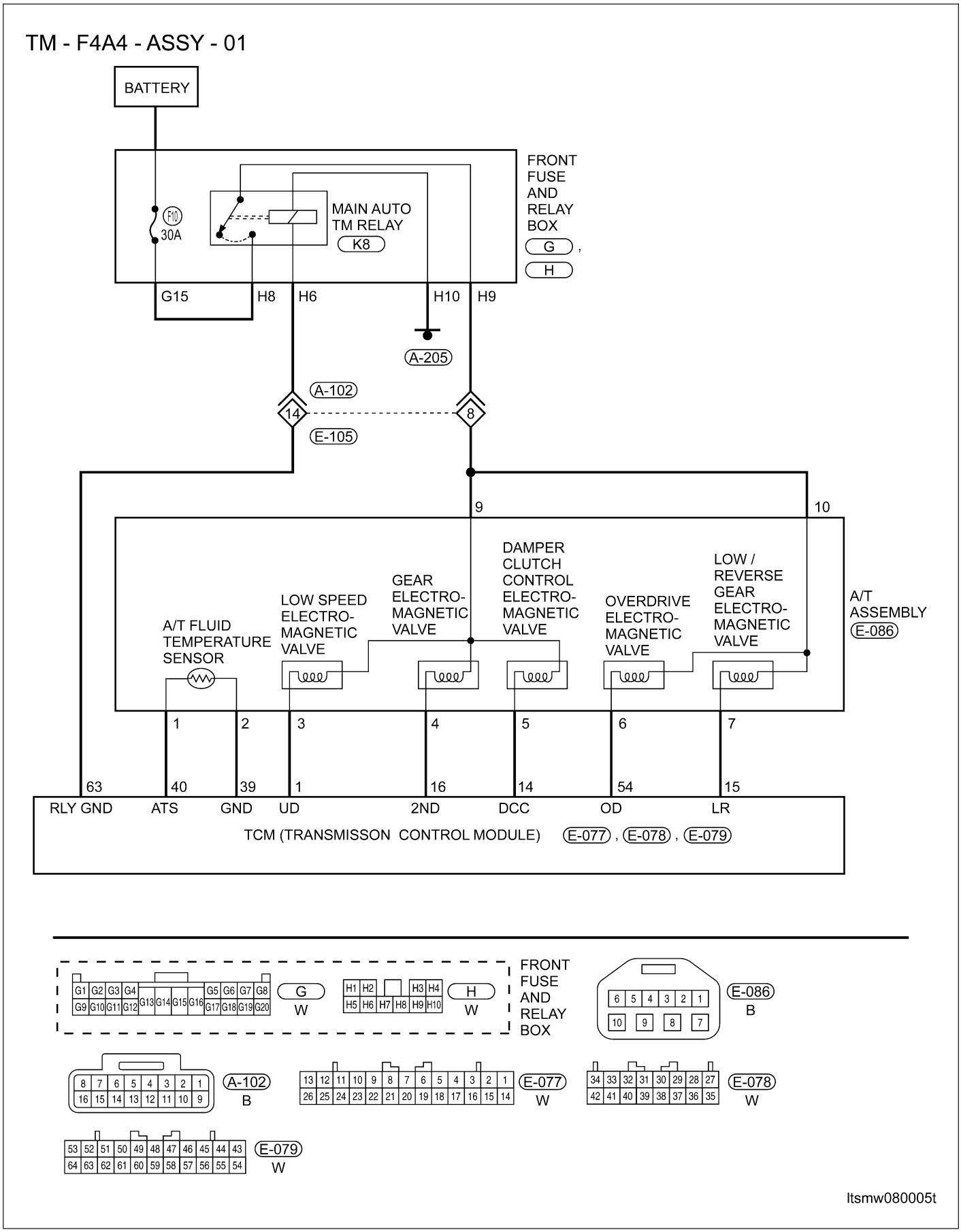

Downloaded from www.Manualslib.com manuals search engine

Operating Components Condition

- Related Operating Components

RELATED OPERATING COMPONENT										
GEARSHIFT LEVER POSITION		GEAR RATIO	ENGINE START	PARKING MECHANISM	DRIVE			LOCK		
					LOW SPEED CLUTCH (UD)	REVERSE GEAR CLUTCH (REV)	OVERSPEED CLUTCH (OD)	LOW GEAR/ REVERSE GEAR BRAKE (L/R)	GEAR 2ND BRAKE (2ND)	ONE-WAY CLUTCH (OWC)
P	Parking	-	Enabled	√	-	-	-	√	-	-
R	Reverse Gear	2.480	-	-	-	√	-	√	-	-
N	Neutral Gear	-	Enabled	-	-	-	-	√	-	-
D	Gear 1	2.842	-	-	√	-	-	√*	-	√
	Gear 2	1.529	-	-	√	-	-	-	√	-
	Gear 3	1.000	-	-	√	-	√	-	-	-
	Gear 4	0.712	-	-	√	-	√	-	√	-
3	Gear 1	2.842	-	-	√	-	-	√*	-	√
	Gear 2	1.529	-	-	√	-	-	-	√	-
	Gear 3	1.000	-	-	√	-	√	-	-	-
2	Gear 1	2.842	-	-	√	-	-	√*	-	√
	Gear 2	1.529	-	-	√	-	-	-	√	-
L	Gear 1	2.842	-	-	√	-	-	√	-	-

*** Low gear/reverse gear is applied when vehicle speed is lower than 10 km/h.**
√ Operating components

On Board Diagnostic Logic

- Self-diagnosis detection logic.

DTC NO.	DTC DEFINITION	DTC DETECTION CONDITION	DTC SET CONDITION	POSSIBLE CAUSES
46	Reverse gear, ratio out of limits	Vehicle is driving	• The Transaxle Control Module (TCM) will set this DTC when the TCM detected that reverse Gear Ratio Error is already present. The output shaft speed signal is increased. • If the DTC was set 4 times, then the A/T will be locked in 3rd gear (D gear).	• Input shaft speed sensor • Output shaft speed sensor • The retainer of deceleration clutch • Transfer case driven and drive gear • Reverse gear clutch system • low gear/reverse gear brake (L/R) system • Noise interference

DTC Confirmation Procedure:

Before performing the following procedure, confirm that battery voltage is more than 12 V.

- Connect the X-431 scan tool to the Data Link Connector (DLC) - use the most current software available.

Downloaded from www.Manualslib.com manuals search engine

- After connection, press POWER key to start X-431.
- Turn ignition switch on, with the scan tool, view and erase stored DTCs in the TCM.
- Start engine and warm it to normal operating temperature, then select ″D″ position.
- Drive the vehicle in 1st, 2nd, 3rd and 4th gears.
- With the scan tool, select view DTC and data stream.
- If the DTC is detected, the DTC condition is current. Go to Diagnostic Procedure - Step 1.
- If the DTC is not detected, the DTC condition is intermittent (See Diagnostic Help and Intermittent DTC Troubleshooting in Section 08 Transaxle & Transfer Case for more information).

NOTE :
Checking the automatic transaxle fluid quality and fluid level is the most basic check of the automatic transaxle. The fluid check is also an important inspection to determine if the transaxle will need to be disassembled.

CAUTION:
The burnt scent of ATF fluid indicates that the transaxle fluid is contaminated. The tiny particles in the fluid pan indicate that the transaxle is worn and it will be necessary to overhaul the transaxle.

NOTE :
While performing electrical diagnosis & testing, always refer to the electrical schematics for specific circuit and component information.

Diagnostic Procedure

1. CHECK FLUID QUALITY AND FLUID LEVEL AND DTC

- Drive the vehicle, until the ATF reaches operating temperature (70° - 80°C).
- Park the vehicle on level ground.
- Shift the gear selector lever to all gear positions once, then shift to gear “N”.
- Clean and check the outside of the dipstick and remove the dipstick to check the fluid level.
- With the scan tool, select view DTC and data stream for A/T.
- Start the engine.
- Monitor the value of the gear position as indicated in the following table while driving:

GEAR POSITION	ELECTRO-MAGNETIC VALVE				
	L/R	GEAR 2	UD	OD	DCC (REF)
Gear 1	Off	On	Off	On	Off
Gear 2	On	Off	Off	On	On
Gear 3	On	Off	Off	Off	On
Gear 4	On	Off	On	Off	On
Reverse gear	Off	On	On	On	Off
Neutral gear/ Parking	Off	On	On	On	Off

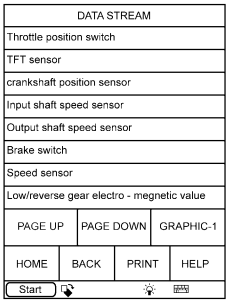

ltsmd080001t

Is DTC 22 or 23 present?

Yes >> If DTC 22 present, See diagnostic procedure for DTC 22 in 08 - Transaxle & Transfer Case.
If DTC 23 present, See diagnostic procedure for DTC 23 in 08 - Transaxle & Transfer Case.

No >> Go to the next step.

Downloaded from www.Manualslib.com manuals search engine

2. HYDRAULIC TEST

- Preheat the fluid from engine to transaxle to 80 - 100°C.
- Lift the vehicle until the wheels can rotate freely.
- Connect the special fluid pressure gauge on the fluid pressure test port.

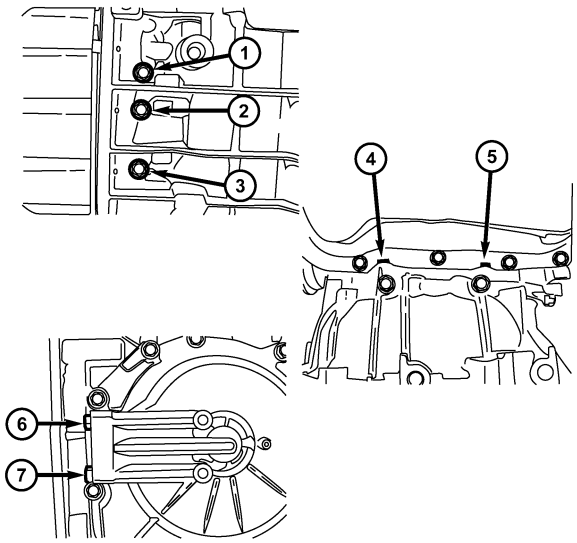

ltsmd080018

TEST PORT	1	2	3	4	5	6	7
Fluid pressure test port name	2nd (Gear 2 Brake) fluid pressure	UD (Low Speed Clutch) fluid pressure	L/R (Low/ Reverse Gear Brake) fluid pressure	DA (Damper Clutch Engagement) fluid pressure	DR (Damper Clutch Disengagement) fluid pressure	RV (Reverse Gear Clutch) fluid pressure	OD (Overdrive Clutch) fluid pressure

Downloaded from www.Manualslib.com manuals search engine

MEASURE STATUS			STANDARD FLUID PRESSURE KPA (PSI)					
GEAR LEVER POSITION	GEAR POSITION	ENGINE SPEED (RPM)	DECELERATION CLUTCH PRESSURE	REVERSE GEAR CLUTCH PRESSURE	OVERDRIVE CLUTCH PRESSURE	LOW/ REVERSE GEAR CLUTCH PRESSURE	SECONDARY BRAKE PRESSURE	TORQUE CONVERTER PRESSURE
P	-	2,500	-	-	-	310 - 390 (45-56)	-	250 - 390 (36 - 56)
R	Reverse Gear	2,500	-	1,270 - 1,770	-	1,270 - 1,770	-	500 - 700 (73 - 101)
N	Neutral Gear	2,500	-	-	-	310 - 390 (45 - 56)	-	250 - 390 (36 - 56)
D	Gear 1	2,500	1,010 - 1,050 (146 - 152)	-	-	1,010 - 1,050 (146 - 152)	-	500 - 700 (73 - 101)
	Gear 2	2,500	-	-	-	-	1,010 - 1,050 (146 - 152)	500 - 700 (73 - 101)
	Gear 3	2,500	590 - 690 (85 - 100)	-	590 - 690 (85 - 100)	-	-	450 - 650 (65 - 94)
	Gear 4	2,500	-	-	590 - 690 (85 - 100)	-	590 - 690 (85 - 100)	450 - 650 (65 - 94)

- In accordance with the shown status of standard fluid pressure measurement table, measure the fluid pressure of each measurement port. The measurement of each port should be within the standard range.
- If some measurement values is beyond the standard range, please refer to the fluid pressure measurement and diagnosis table for causes.

Is the check result normal?

Yes >> Go to step 5 for disc or plate abrasion.

No >> Go to the next step.

3. CHECK VALVE BODY ASSEMBLY AND FLUID PUMP AND PIPELINE

- Turn the ignition switch off.
- Disassemble and repair F4A4 automatic transaxle assembly (See Automatic Transaxle Removal & Installation in Section 08 Transaxle & Transfer Case).
- Check valve body and fluid pump and pipeline.

Is the check result normal?

Yes >> Go to the next step.

No >> Replace damaged components and low speed clutch and reverse gear clutch for low pressure burned.

4. COMPRESSED AIR TEST

- Check low speed clutch system: Low speed clutch piston should be active and maintain pressure when compressed air is applied to the fluid hole.
- Check reverse gear clutch system: Reverse gear clutch piston should be active and maintain pressure when compressed air is applied to the fluid hole.

Is the check result normal?

Yes >> Go to the next step for disc or plate abrasion.

No >> Replace damaged components and low speed clutch and reverse gear clutch for low pressure burned.

Downloaded from www.Manualslib.com manuals search engine

5. CHECK LOW SPEED CLUTCH SYSTEM

- Stop vehicle and turn ignition switch off.
- Disassemble and repair F4A4 automatic transaxle assembly (See Automatic Transaxle Removal & Installation in Section 08 Transaxle & Transfer Case).
- Check low speed clutch system:
  - Check low speed clutch plate
  - Check low speed clutch disc
  - Snap ring
  - Clutch reaction disc
  - D-Ring
  - Spring retainer
  - Low speed clutch drum
  - Low speed clutch piston

Is the check result normal?

Yes >> Go to the next step.

No >> Replace the damaged components.

6. CHECK REVERSE GEAR CLUTCH SYSTEM

- Check reverse gear clutch system:
  - Reverse gear clutch plate
  - Reverse gear clutch disc
  - Central support
  - Snap ring
  - Clutch reaction disc
  - Spring retainer
  - Reverse gear clutch piston

Is the check result normal?

Yes >> Go to the next step.

No >> Replace the damaged components.

7. CHECK DTC

- Assemble all disassembled components.
- Install the transaxle assembly (See Automatic Transaxle Removal & Installation in Section 08 Transaxle & Transfer Case).
- Fill the transaxle with new ATF:
  - Fill the ATF from the fill tube.
  - Reinstall the hose connector disassembled in step 1 and reinstall the dipstick (clean the dipstick before installing).
  - Shift the gear selector lever to each gear position and then shift to gear “N”.
  - Drive the vehicle until the ATF reaches operating temperature (70° - 80°C) and re-check the fluid level. The fluid level must be within the HOT range of dipstick.
  - Reinstall the dipstick into the transaxle.
- With the X-431 scan tool, read TCM DTCs.
- Refer to ″DTC Confirmation Procedure″.

Is DTC 46 present?

Yes >> Replace the TCM.

No >> The system is now operating properly.

Downloaded from www.Manualslib.com manuals search engine

54 - Electrical Relay Open Circuit

TM - F4A4 - PWR - 01

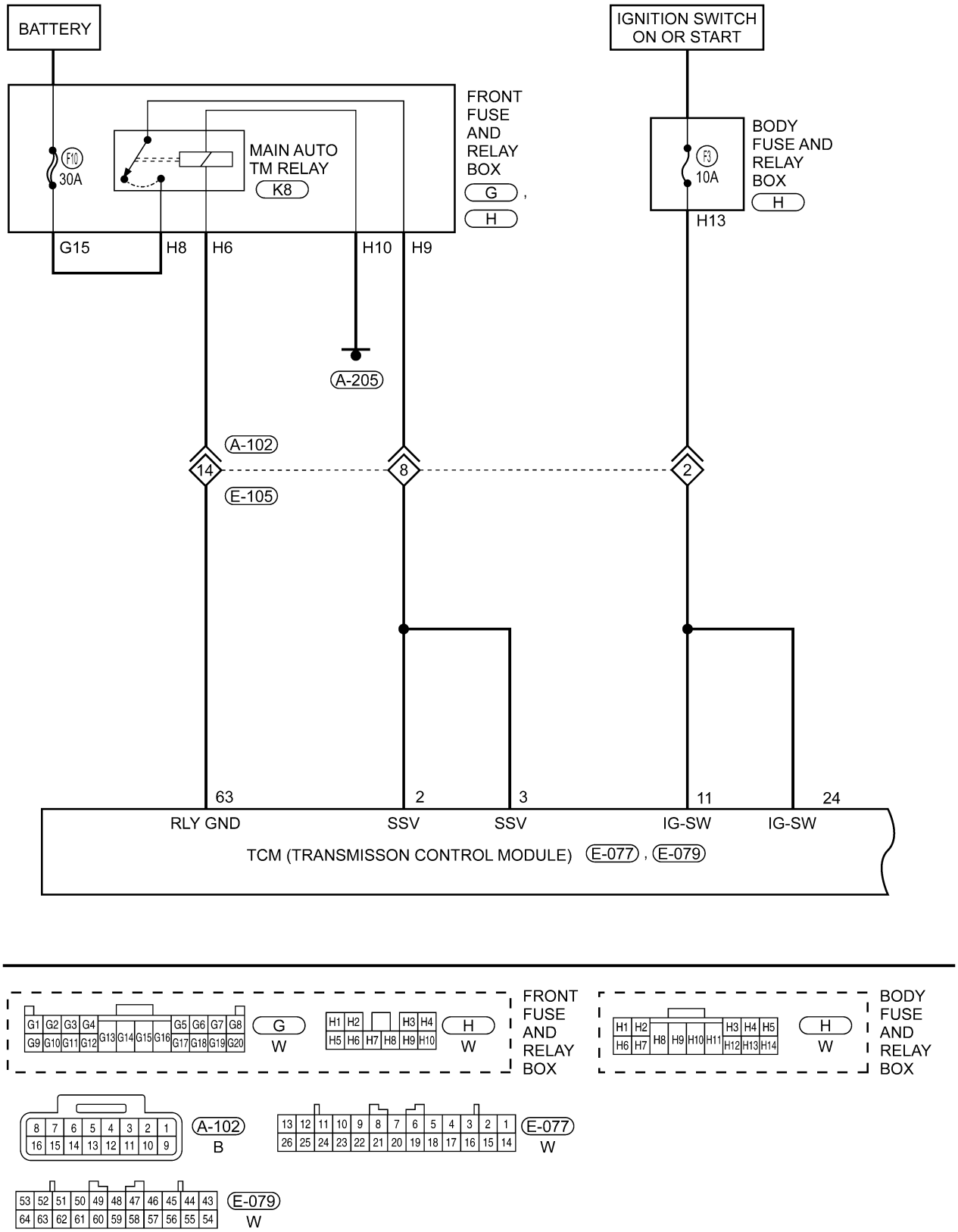

ltsmw080003t

Downloaded from www.Manualslib.com manuals search engine

On Board Diagnostic Logic

- Self-diagnosis detection logic.

DTC NO.	DTC DEFINITION	DTC DETECTION CONDITION	DTC SET CONDITION	POSSIBLE CAUSES
54	Electrical relay open circuit	Ignition switch on	• The Transaxle Control Module (TCM) will set this DTC when the TCM detected that the A/T control voltage is below 7 V. • If the DTC was set, then the A/T will be locked in 3rd gear (D gear) or shifted to low gear when in sports mode.	• A/T control relay • Harness or connectors (The sensor circuit is open or shorted) • TCM

DTC Confirmation Procedure:

Before performing the following procedure, confirm that battery voltage is more than 12 V.

- Connect the X-431 scan tool to the Data Link Connector (DLC) - use the most current software available.
- After connection, press POWER key to start X-431.
- Turn the ignition switch on.
- With the scan tool, view and erase stored DTCs in the TCM.
- Start engine and warm it to normal operating temperature.
- With the scan tool, select view DTC and data stream.
- If the DTC is detected, the DTC condition is current. Go to Diagnostic Procedure - Step 1.
- If the DTC is not detected, the DTC condition is intermittent (See Diagnostic Help and Intermittent DTC Troubleshooting in Section 08 Transaxle & Transfer Case for more information).

NOTE :
While performing electrical diagnosis & testing, always refer to the electrical schematics for specific circuit and component information.

Diagnostic Procedure

1. CHECK GROUND CONNECTION

- Turn ignition switch off.
- Loosen and retighten ground screws on the body (See Ground Inspection in Section 12 Brakes).
- Inspect the ground connection C-201 mounting position (See Vehicle Wiring Harness Layout - Main Harness in Section 16 Wiring).

Are the ground connections OK?

Yes >> Go to the next step.

No >> Repair or replace the ground connections.

Downloaded from www.Manualslib.com manuals search engine

2. CHECK A/T RELAY SUPPLY VOLTAGE

- Turn ignition switch ON and then OFF.
- Check voltage between TCM terminals 2, 3 and ground.
- Turn ignition switch ON, battery voltage will exist.
- After turning ignition switch OFF, battery voltage will exist for a few seconds, then drop to approximately 0 V.

Is the check result normal?

Yes >> Go to step 8.

No >> Go to the next step.

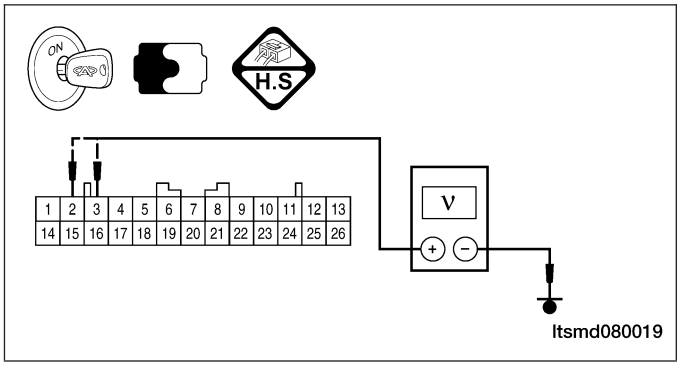

3. CHECK A/T RELAY CONTROL VOLTAGE

- Turn ignition switch on.
- Check voltage between ECM terminal 63 and ground.
- Voltage should be more than 12 V.

Is the check result normal?

Yes >> Go to the next step.

No >> Go to step 8.

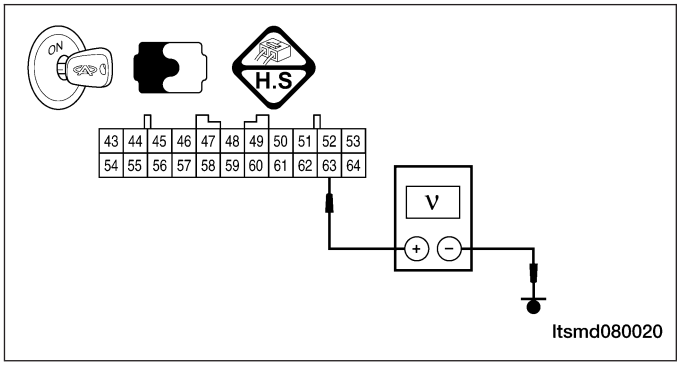

4. CHECK A/T RELAY CONTROL VOLTAGE CIRCUIT

- Disconnect TCM harness connector.
- Disconnect front fuse and relay box harness connector H.
- Check harness continuity between TCM terminal 63 and front fuse and relay box terminal H6.
- Check harness continuity between front fuse and relay box terminal H10 and front fuse and ground.
- Check harness connector A-102, E-105, terminal 11.
- Continuity should exist.
- Check the harness for short to power or short to ground.

Is the check result normal?

Yes >> Go to the next step.

No >> Repair or replace the circuit for an open or short to ground or short to power in harness or connectors.

Downloaded from www.Manualslib.com manuals search engine

5. CHECK A/T RELAY SUPPLY CIRCUIT

- Check harness continuity between TCM terminal 2, 3 and front fuse and relay box terminal H9.
- Check for harness continuity between front fuse and relay box terminal H8 and G15.
- Check harness connector A-102, E-105, terminal 1.
- Continuity should exist.
- Check the harness for short to ground.

Is the check result normal?

Yes >> Go to the next step.

No >> Repair or replace the circuit for an open or short to ground in harness or connectors.

6. CHECK FUSE

- Disconnect Fuse 10 (30A) fuse from the front fuse and relay box.
- Check fuse 10 (30A).

Is the check result normal?

Yes >> Go to the next step.

No >> Replace fuse 10 (30A).

7. CHECK FRONT FUSE AND RELAY BOX

- Check front fuse and relay box.

Is the check result normal?

Yes >> Go to the next step.

No >> Replace front fuse and relay box.

8. CHECK DTC

- With the X-431 scan tool, read TCM DTCs.
- Refer to ″DTC Confirmation Procedure″.

Is DTC 54 still present?

Yes >> Replace the TCM.

No >> The system is now operating properly.
Reassemble the vehicle and road test to verify the customers complaint is repaired.

Downloaded from www.Manualslib.com manuals search engine

ON-VEHICLE SERVICE

F4A4 Automatic Transaxle Assembly

Removal & Installation

1. Raise and support the vehicle.
2. Disconnect the negative battery cable.
3. Remove the battery and battery tray (See Battery Removal & Installation in Section 05 Starting & Charging).
4. Remove the air cleaner and air duct assembly.
5. Drain the cooling system (See Cooling System Draining Procedure in Section 06 Cooling System).
6. Remove the base mounting bolts (1) of the air cleaner housing assembly.

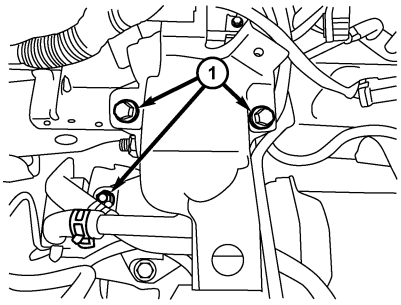

besm080038

7. Disconnect and remove the electrical connectors for the following components:
   - Output shaft sensor (1)
   - Input shaft sensor (2)
   - Electromagnetic valve switch connector (3)
   - Gear switch connector (5)
8. Disconnect the transaxle fluid lines (6) using a suitable tool.
9. Remove the shift cable (4) from the transaxle assembly.

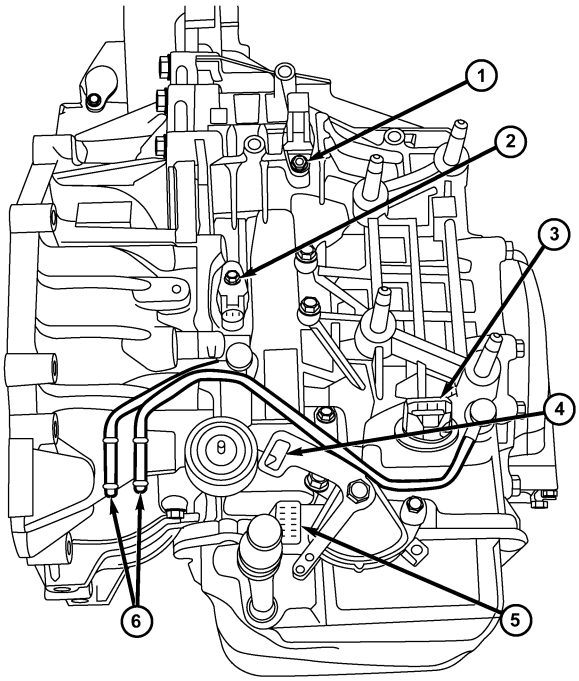

ltsm080153

10. Remove the starter motor (See Starter Removal & Installation in Section 05 Starting & Charging).

Downloaded from www.Manualslib.com manuals search engine

11. Remove the bolts (1) attaching the drive plate to the torque converter.
    (Tighten: Drive plate bolts to 75 N·m)

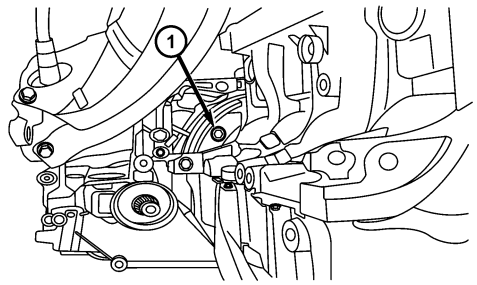

besm080058

12. Support the engine using an engine support fixture or suitable jack.
13. Remove the engine to transaxle upper bolts and remove the bracket.
    (Tighten: Engine to transaxle upper bolts to 80 N·m)
14. Remove transaxle mount nuts (2) and the transaxle mount bracket bolts (1).
    (Tighten: Transaxle mount nuts to 120 N·m)

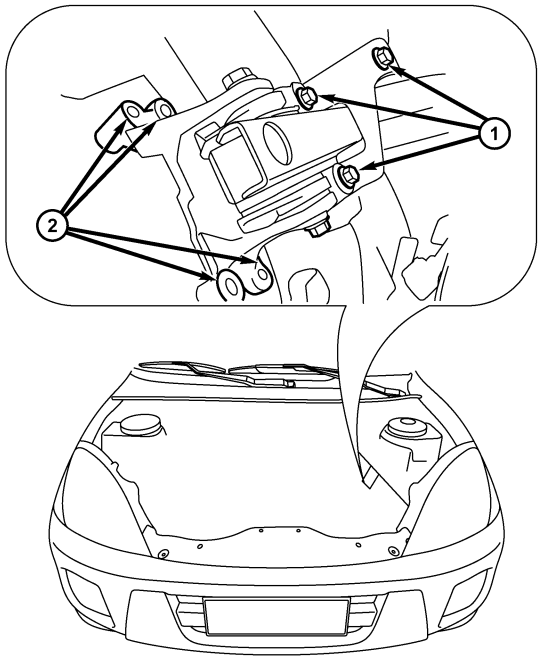

ltsm020156

15. Raise the vehicle.
16. Remove the drain plug (1) and drain the transaxle fluid.

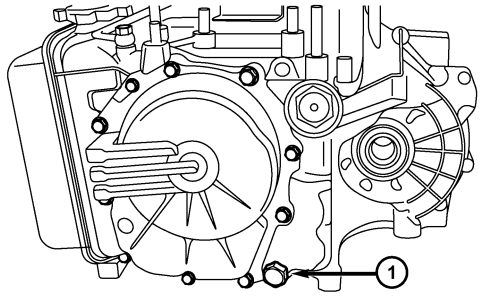

ltsm080190

Downloaded from www.Manualslib.com manuals search engine

17. Remove both front axle shafts (See Front Axle Shaft Removal & Installation in Section 09 Driveline & Axle).
18. Remove the engine undercover and splash shields.
19. Remove the engine to transaxle lower bolts.
    (Tighten: Engine to transaxle lower bolts to 80 N·m)
20. Remove the bolts that mount the side sill to vehicle body.
    (Tighten: Side sill to vehicle body bolts to 120 N·m)
21. Remove the front engine mount bolts (1).
    (Tighten: Front mount bolts to 60 N·m)

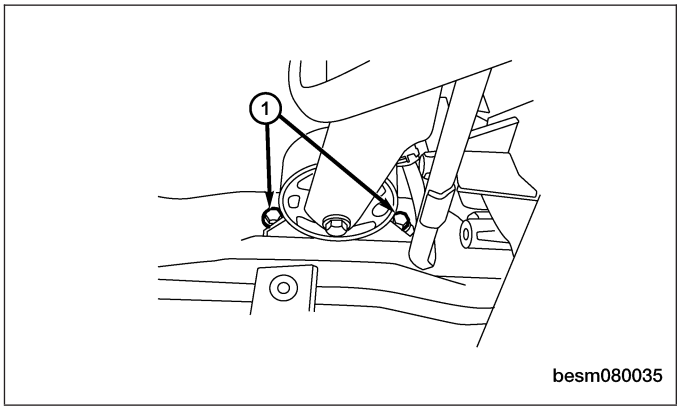

22. Remove the rear engine mount bolts (2) and the rear engine mount bracket bolts (1).
    (Tighten: Rear mount bolts to 40 N·m)

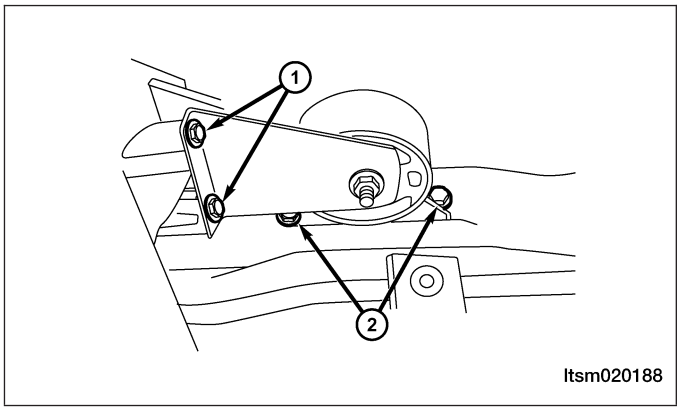

23. Remove the sub-frame assembly (See Sub-Frame Assembly Removal & Installation in Section 10 Suspension).
24. Remove the engine to transaxle lower bolts.
    (Tighten: Transaxle mount bolts to 40 N·m)
25. Separate the transaxle from the engine and remove the transaxle from the vehicle.

WARNING!
Use a suitable jack to support the transaxle during removal.

26. Installation is in the reverse order of removal.

Downloaded from www.Manualslib.com manuals search engine

Installation Notes:

- Check the transaxle fluid level.
  - Drive the vehicle until the ATF reaches operating temperature (70° - 80°C).
  - Park the vehicle on level ground.
  - Shift the gear selector lever to all gear positions once, then shift to gear “N”.
  - Clean and check the outside of the dipstick and remove the dipstick to check the fluid level.
  - Check if the transmission fluid level is within the HOT marking of the dipstick. If lower than the HOT marking, refill the transaxle until the fluid level is above the HOT marking.
- After installation, check for any fluid leakage and verify the transaxle fluid level is correct. Refill the transaxle fluid through the fill hole (1) shown in the figure.

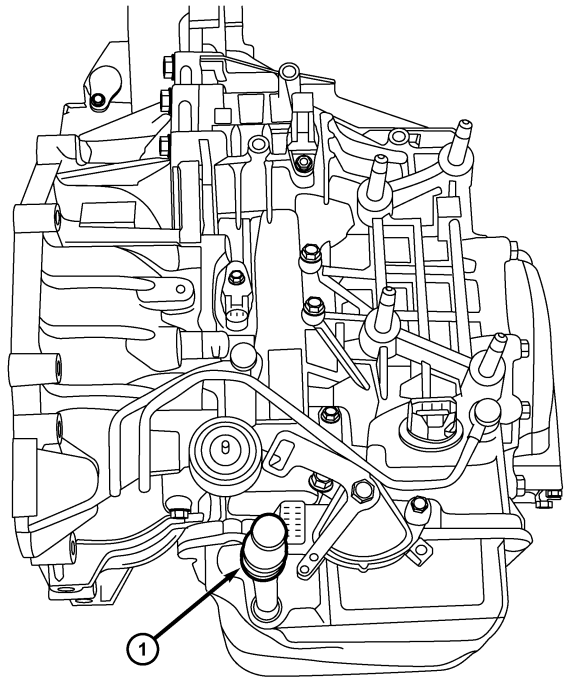

ltsm080185

Automatic Shifter Selector

Removal & Installation

1. Raise and support the vehicle.
2. Disconnect the negative battery cable.
3. Remove the air cleaner and air duct assembly.
4. Remove the base mounting of the air cleaner housing assembly.

Downloaded from www.Manualslib.com manuals search engine

5. Remove the shift cable adjusting bolt (1) from the transaxle gearshift switch.

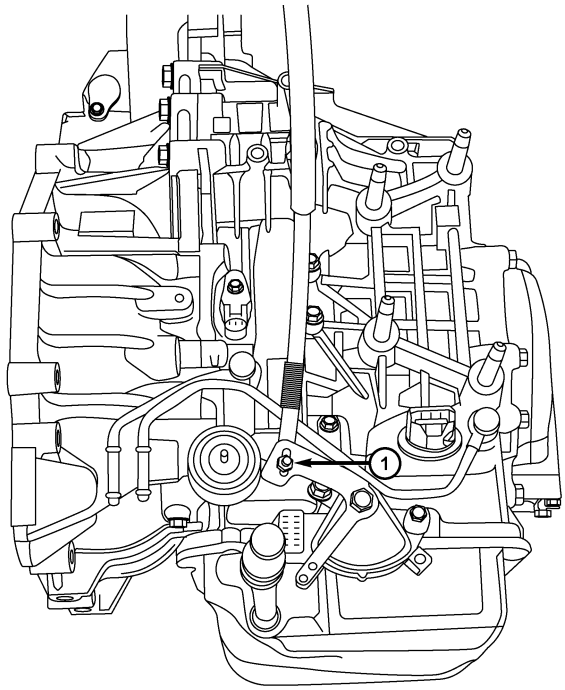

ltsm080167

6. Remove the gearshift knob (1).
7. Remove the gearshift cover (2) from the lower console.

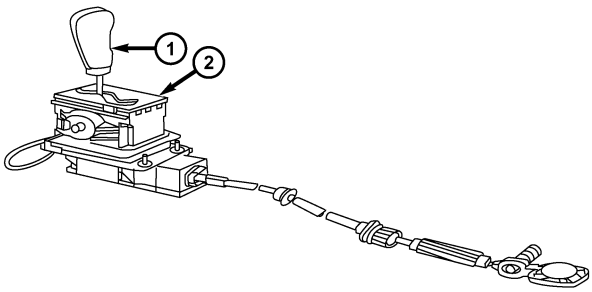

besm080049

8. Apply the parking brake (apply parking brake handle to clear lower console during removal).
9. Remove the lower console (See Lower Console Removal & Installation in Section 15 Body & Accessories).
10. Remove the shift cable from the gearshift mechanism.
11. Disconnect the electrical connector (2).
12. Remove the four bolts (1) and then remove the gearshift mechanism from the bracket.

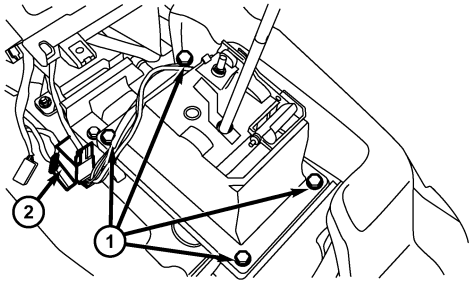

ltsm080182

Downloaded from www.Manualslib.com manuals search engine

13. Installation is in the reverse order of removal.

NOTE :
If the battery has low voltage, press the release switch (1) to move the gearshift lever.

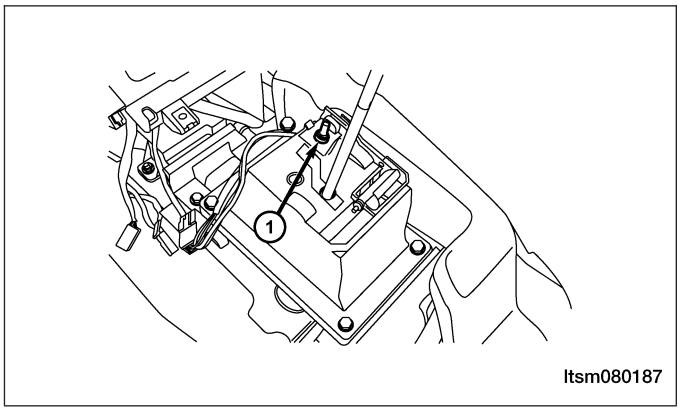

Downloaded from www.Manualslib.com manuals search engine

5-SPEED MANUAL TRANSAXLE

GENERAL INFORMATION 08-247
Description 08-247
Operation 08-250
Specifications 08-251
Special Tools 08-253

DIAGNOSIS & TESTING 08-259
Abnormal Noise 08-259
Symptom Diagnostics 08-259

ON-VEHICLE SERVICE 08-260

Manual Transaxle Assembly 08-260
Removal & Installation 08-260

Gear Selector & Shifter Assembly 08-264
Removal & Installation 08-264
Disassembly 08-267
Assembly 08-268

MANUAL TRANSAXLE UNIT REPAIR 08-270

Transaxle 08-270
Specifications 08-270
Disassembly 08-270
Inspection 08-274
Assembly 08-275

Input Shaft 08-278
Specifications 08-278
Disassemble 08-279
Assemble 08-281
Inspection 08-285

Output Shaft 08-287
Disassemble 08-287
Assemble 08-290

Output Gear For Reverse Gear 08-296
Disassemble 08-296
Inspection 08-296

5th-Reverse Gear Shift Fork 08-297
Disassemble 08-297
Assemble 08-298

3rd-4th Gear Shift Fork 08-298
Disassemble 08-298
Assemble 08-299

1st-2nd Gear Shift Fork 08-299
Disassemble 08-299
Assembly 08-300

Transaxle Clutch Housing Assembly 08-301
Disassemble 08-301
Assembly 08-303

Transaxle Main Housing Assembly 08-305
Assembly 08-305

Downloaded from www.Manualslib.com manuals search engine

GENERAL INFORMATION

Description

The QR523 five-speed transaxle is a constant-mesh manual transaxle that is synchronized in all gear ranges, including reverse.

The transaxle consists of three major sub-assemblies:
- Input shaft
- Output shaft
- Differential transaxle assembly

The transaxle shift system consists of the following components:
- Mechanical shift cover
- Shift rails
- Shift forks

Downloaded from www.Manualslib.com manuals search engine

- Shift cables

QR523 External View

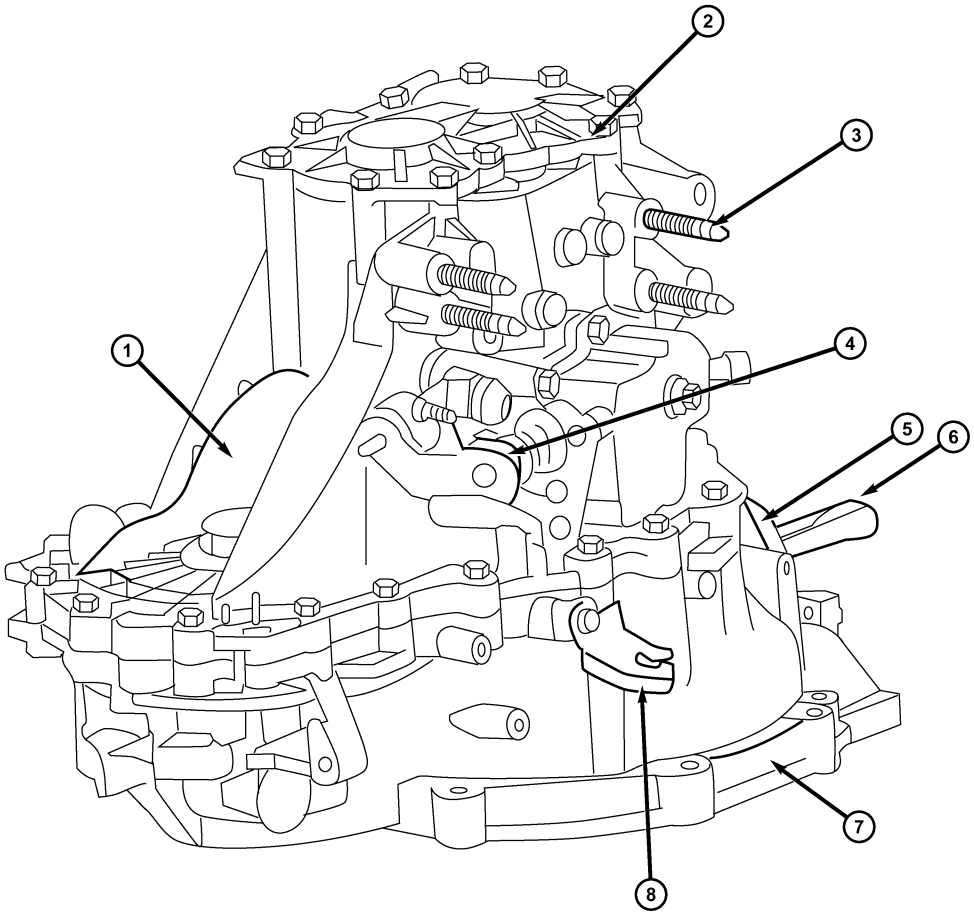

ltsm080021

1 - Transaxle Housing Assembly	5 - Release Fork Dust Boot
2 - Bearing Cap Assembly	6 - Release Fork
3 - Stud Bolt	7 - Clutch Housing Assembly
4 - Gear-Shifting Mechanism Assembly	8 - Hydraulic Clutch Line Bracket

Downloaded from www.Manualslib.com manuals search engine

QR523 Internal View

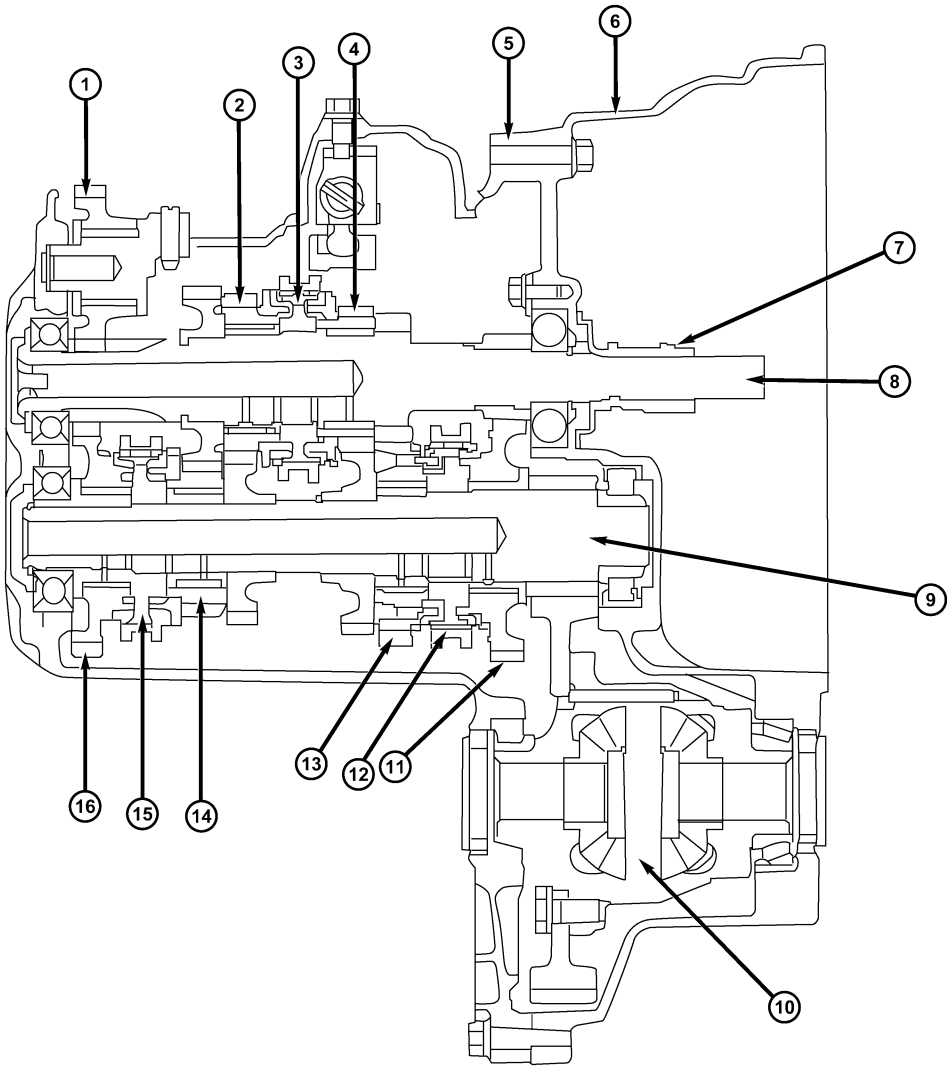

1 - Idler Assembly	9 - Output Shaft
2 - Pinion Gear, 4th Gear	10 - Differential Assembly
3 - 3rd-4th Gear Synchronizer	11 - Driven Gear of 1st Gear
4 - Pinion Gear, 3rd Gear	12 - 1st-2nd Gear Synchronizer
5 - Transaxle Housing	13 - Driven Gear, 2nd Gear
6 - Clutch Housing	14 - Driven Gear, 5th Gear
7 - Release Bearing Saddle	15 - Synchronizer of 5th-Gear and Reserve Gear
8 - Input Shaft	16 - Gear, Reverse Gear

Downloaded from www.Manualslib.com manuals search engine

Operation

The following are the details of the manual transaxle:

Neutral

Engine power is transmitted to the input shaft via the clutch assembly and the input shaft turns. Since no synchronizers are engaged on either the input or output shafts, power is not transmitted to the output shafts, power is not transmitted to the output shaft and the differential does not turn.

1st Gear

Engine power is transmitted to the input shaft via the clutch assembly and the input shaft turns. The input shaft first gear is integral to the input shaft, and is in constant mesh with the intermediate shaft first speed gear. Because of this constant mesh, the output shaft first speed gear freewheels until first gear is selected. As the gearshift lever is moved to the first gear position, the 1-2 fork moves the 1-2 synchronizer sleeve towards first gear on the output shaft. The synchronizer sleeve engages the first gear clutch teeth, engaging the gear to the output shaft, and allowing power to transmit through the output shaft to the differential.

2nd Gear

Engine power is transmitted to the input shaft via the clutch assembly and the input shaft turns. The input shaft second gear is integral to the input shaft, and is in constant mesh with the output shaft second speed gear. Because of this constant mesh, the output shaft second speed gear freewheels until second gear is selected. As the gearshift lever is moved to the second gear position, the 1-2 fork moves the 1-2 synchronizer sleeve towards second gear on the output shaft. The synchronizer sleeve engages the second gear clutch teeth, engaging the gear to the output shaft, and allowing power to transmit through the output shaft to the differential.

3rd Gear

Engine power is transmitted to the input shaft via the clutch assembly and the input shaft turns. The input shaft third speed gear is in constant mesh with the output shaft 3-4 cluster gear which is fixed to the output shaft. Because of this constant mesh, the input shaft third speed gear freewheels until third gear is selected. As the gearshift lever is moved to the third gear position, the 3-4 fork moves the 3-4 synchronizer sleeve towards third gear on the input shaft. The synchronizer sleeve engages the third gear clutch teeth, engaging the gear to the input shaft, and allowing power to transmit through the output shaft to the differential.

4th Gear

Engine power is transmitted to the input shaft via the clutch assembly and the input shaft turns. The input shaft fourth speed gear is in constant mesh with the output shaft 3-4 cluster gear which is fixed to the output shaft. Because of this constant mesh, the input shaft fourth speed gear freewheels until fourth gear is selected. As the gearshift lever is moved to the fourth gear position, the 3-4 fork moves the 3-4 synchronizer sleeve towards fourth gear on the input shaft. The synchronizer sleeve engages the fourth gear clutch teeth, engaging the gear to the input shaft, and allowing power to transmit through the output shaft to the differential.

5th Gear

Engine power is transmitted to the input shaft via the clutch assembly and the input shaft turns. The input shaft fifth speed gear is pressed on to the input shaft, and is in constant mesh with the output shaft fifth speed gear. Because of this constant mesh, the output shaft fifth speed gear freewheels until fifth gear is selected. As the gearshift lever is moved to the fifth gear position, the 5-R fork moves the 5-R synchronizer sleeve towards the output shaft fifth speed gear. The synchronizer sleeve engages the fifth gear clutch teeth, engaging the gear to the input shaft, and allowing power to transmit through the output shaft to the differential.

Reverse Gear

Engine power is transmitted to the input shaft via the clutch assembly and the input shaft turns. The input shaft reverse gear is integral to the input shaft, and is in constant mesh with the reverse idler gear. The reverse idler gear, which reverses the rotation of the output shaft, is in constant mesh with the output shaft reverse gear. Because of this constant mesh, the output shaft reverse gear freewheels until reverse gear is selected. As the gearshift lever is moved to the reverse gear position, the 5-R fork moves the 5-R synchronizer sleeve towards the output shaft reverse gear. The synchronizer sleeve engages the reverse gear clutch teeth, engaging the gear to the output shaft, and allowing power to transmit through the output shaft to the differential.

Downloaded from www.Manualslib.com manuals search engine

Transaxle Identification Number

The transaxle serial number can be found on a metal tag (1) fastened to the transaxle case on the clutch housing. The third row data is the transaxle serial number.

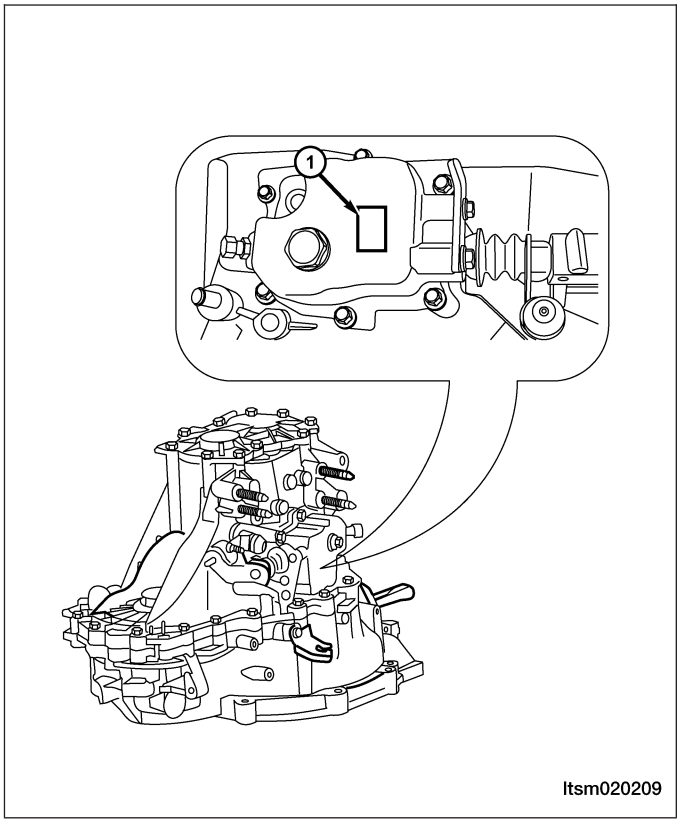

Specifications

Maintenance Specifications

DESCRIPTION	ALLOWABLE RANGE (mm)	LIMIT VALUE (mm)
Axial Clearance Of Input Shaft Front Bearing	-0.01 - 0.21	-
Axial Clearance Of Input Shaft Rear Bearing	-0.01 - 0.12	-
Axial Clearance Of Input Shaft Fifth Gear	-0.01 - 0.09	-
Axial Clearance Of Output Shaft Front Bearing	-0.01 - 0.12	-
Axial Clearance Of Output Shaft Rear Bearing	-0.01 - 0.09	-
Axial Clearance Of Output Shaft Third Gear	-0.01 - 0.09	-
Back Clearance Of Differential Case Planetary Gear	0.025 - 0.150	-
Clearance Between The Gear And The Back Of Synchronizer Ring	-	0.05
Pretension Of Differential Case	0.05 - 0.11	-

Downloaded from www.Manualslib.com manuals search engine

Sealants and Adhesives

DESCRIPTION	SPECIFIED SEALANTS AND ADHESIVES
Clutch Housing to Transaxle Housing	Three Arrow 1216E
Control Case to Transaxle Housing	
Lower Head to Transaxle Housing	

Torque Specifications

DESCRIPTION	TORQUE (N·m)
Bottom Cover-Transaxle Installation Bolts	6.2 - 7.6
Backup Lamp Switch	28.7 - 35.3
Clutch Housing-Transaxle Housing Installation Bolts	39.5 - 48.5
Clutch Release Bearing Saddle Retainer Installation Bolts	8.8 - 10.8
Gear-Shifting Mechanism Assembly Installation Bolts	16.1 - 19.9
Gear-Shifting Staying Wire Bracket Installation Bolts	16.1 - 19.9
Idling Gear Assembly Installation Bolts	43.1 - 52.9
Main Gearbox Driven Gear Installation Bolts	118.5 - 145.5
Speedometer Gear Installation Bolts	3.5 - 4.3

Technical Data

TYPE	MECHANICAL GEAR COUPLING	
Gear Position	Transaxle Ratio	Gear Ratio
1st	3.583	43/12
2nd	1.947	37/19
3rd	1.379	40/29
4th	1.030	34/33
5th	0.820	32/39
Reverse	3.363	37/11
Final Drive	4.313	69/16
Transaxle Fluid Type	GL-4 75W-90	
Transaxle Fluid Quantity	2.2 L	
Rated Torque	230 N·m	
Rated Speed	5500 RPM	
Rated Power	100 KW	
Center Distance	204 mm	
Input Shaft Spline	Tooth number	20
	Module	1.0583
	Pressure angle	30°
	External diameter	ϕ22.224 mm (0/-0.3)
	Inner diameter	ϕ19.675 mm (0/-0.2)
Physical Dimension	398.5×522×355.7	

Downloaded from www.Manualslib.com manuals search engine

Special Tools

Installer Connector MB-990926	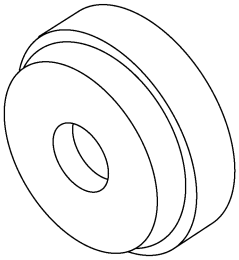 ltsm080001
Installer Connector MB-990934	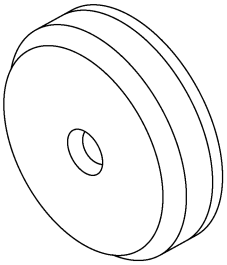 ltsm080002
Installer Connector MB-990935	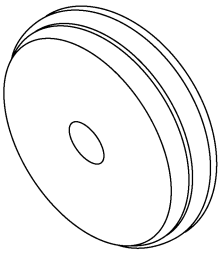 ltsm080003
Fluid Seal/Differential Installer MB-998325	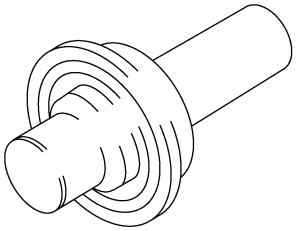 ltsm080004

Downloaded from www.Manualslib.com manuals search engine

Bearing Outer Race Remover MB-998346	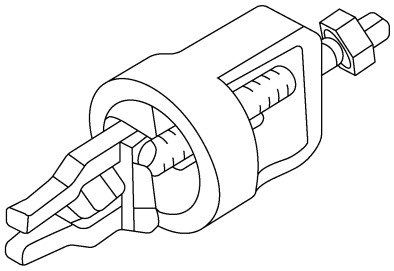 ltsm080005
Handle MB-990938	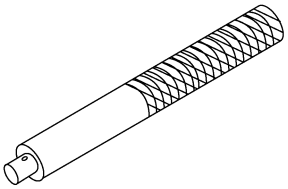 ltsm020026
Valve Spring Compressor MB-998772	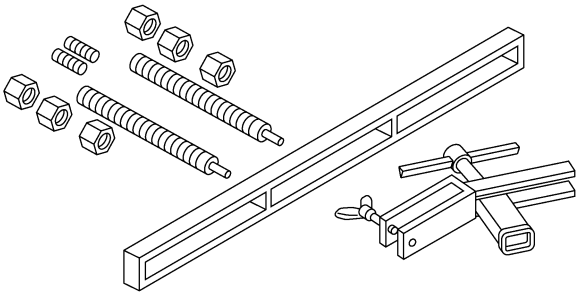 ltsm020012
Bearing Remover MB-998801	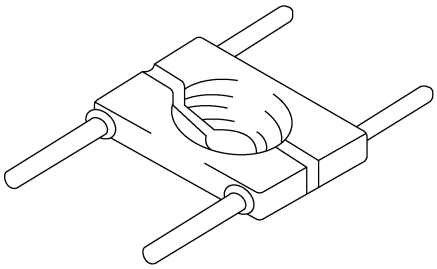 ltsm080006

Downloaded from www.Manualslib.com manuals search engine

Installer Cap MB-998812	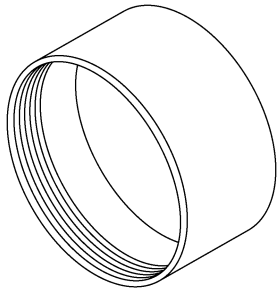 ltsm080007
Installer (100) MB-998813	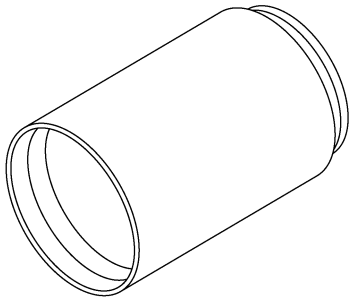 ltsm080008
Installer Connector (200) MB-998814	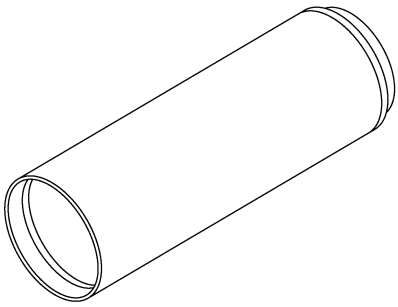 ltsm080009
Installer Connector (30) MB-998816	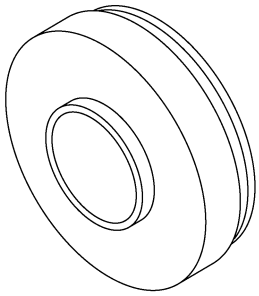 ltsm080010

Downloaded from www.Manualslib.com manuals search engine

Installer Connector (34) MB-998817	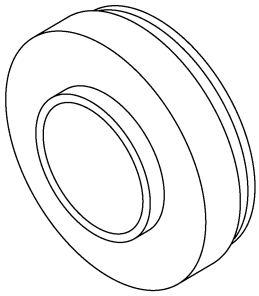 ltsm080011
Installer Connector (38) MB-998818	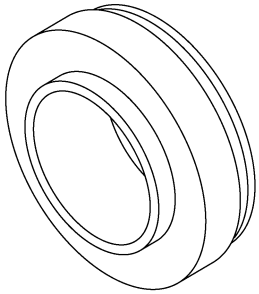 ltsm080012
Installer Connector (40) MB-998819	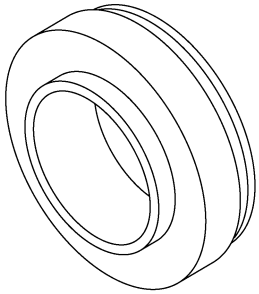 ltsm080013
Installer Connector (46) MB-998822	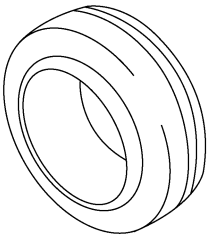 ltsm080014

Downloaded from www.Manualslib.com manuals search engine

Installer Connector (48) MB-998823	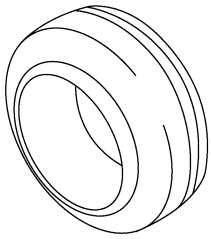 ltsm080015
Installer Connector (50) MB-998824	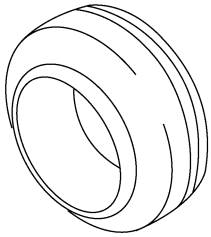 ltsm080016
Installer Connector (52) MB-998825	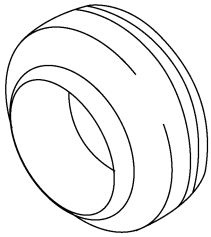 ltsm080017
Bearing Remover MB-998917	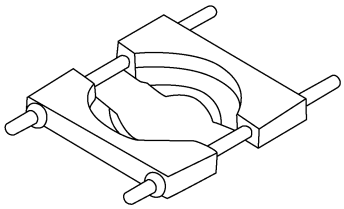 ltsm080018

Downloaded from www.Manualslib.com manuals search engine

Hook MB-999566	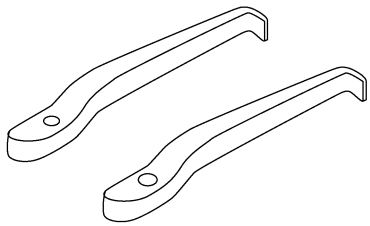 ltsm080019
Flywheel Fixture CH-20043	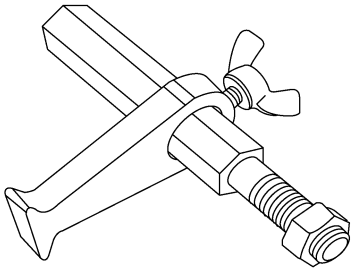 ltsm020211
Bearing Installer CH-30028	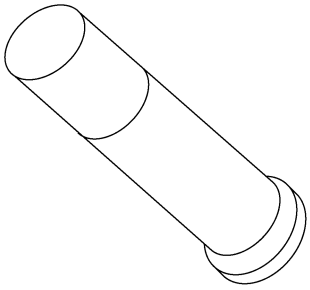 ltsm020213
Bearing Extractor 09917-58010	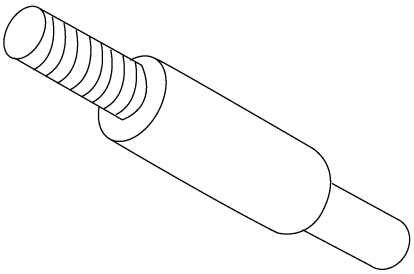 ltsm020212

Downloaded from www.Manualslib.com manuals search engine

DIAGNOSIS & TESTING

Abnormal Noise

Transaxle noise is most often a result of worn or damaged components. Chipped, broken gear or synchronizer teeth, and worn bearings all cause noise.

Inspect the following:
- Insufficient lubrication
- Incorrect lubricant
- Mis-assembled or damaged internal components
- Improper operation

Symptom Diagnostics

Hard Shifting
- Hard shifting may be caused by a mis-adjusted crossover cable. If hard shifting is accompanied by gear clash, synchronizer clutch and stop rings or gear teeth may be worn or damaged.

Slips Out Of Gear
- Transaxle disengagement may be caused by misaligned or damaged shift components, or worn teeth on the drive gears or synchronizer components. Incorrect transaxle assembly also causes gear disengagement.

Low Lubricant Level
- Insufficient transaxle lubricant is usually the result of leaks, or inaccurate fluid level check or refill method. Vehicle must be level to accurately check fluid level. Leakage is evident by the presence of fluid around the leak point. If leakage is not evident, the condition is probably the result of an under fill.
- If air-powered lubrication equipment is used to fill a transaxle, be sure the equipment is properly calibrated. Equipment out of calibration can lead to an under fill condition.

Clutch Problems
- Worn, damaged, or misaligned clutch components can cause difficult shifting, gear clash, and noise.
- A worn or damaged clutch disc, pressure plate, or a faulty slave cylinder can cause hard shifting and gear clash.

Abnormal Noise
- Transaxle noise is most often a result of worn or damaged components. Chipped, broken gear or synchronizer teeth, and worn bearings all cause noise.

  Inspect the following:

  – Insufficient lubrication
  – Incorrect lubricant
  – Improperly assembled or damaged internal components

Downloaded from www.Manualslib.com manuals search engine

ON-VEHICLE SERVICE

Manual Transaxle Assembly

Removal & Installation

NOTE :
The following special tools are required to perform the repair procedure:
- MB-990938 - Handle
- MB-990935 - Installer Connector

1. Raise and support the vehicle.
2. Disconnect the negative battery cable.
3. Remove the battery and battery tray (See Battery Removal & Installation in Section 05 Starting & Charging).
4. Remove air cleaner and air duct.

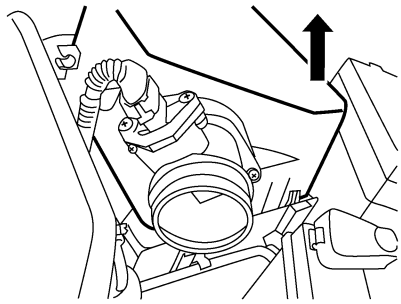

ltsm020226

5. Drain the cooling system (See Cooling System Draining Procedure in Section 06 Cooling System).
6. Remove the base mounting of the air cleaner housing assembly.
7. Remove the backup lamp switch (2) and vehicle speed sensor (1).

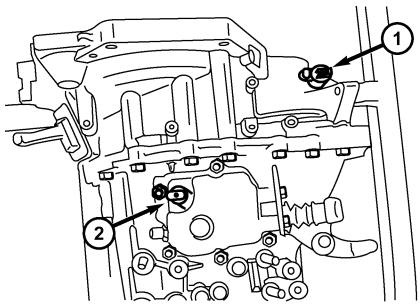

ltsm030029

Downloaded from www.Manualslib.com manuals search engine

8. Remove the two shift cables (1) from the transaxle.

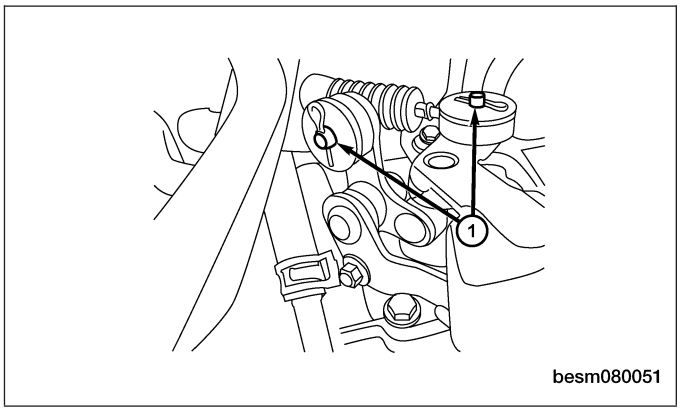

9. Remove the shift cable clamp (1) from the shift cable bracket.

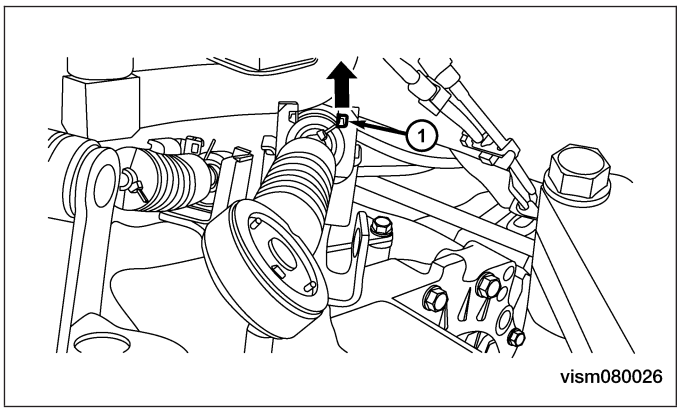

10. Remove the clutch master cylinder outlet pipe (1) from the clutch slave cylinder.
    (Tighten: Outlet pipe bolt to 17 ± 1 N·m)
11. Remove the starter motor (See Starter Removal & Installation in Section 05 Starting & Charging).
12. Support the engine using an engine support fixture or suitable jack.
13. Remove the engine to transaxle upper bolts and remove the bracket.
    (Tighten: Engine to transaxle upper bolts to 80 N·m)

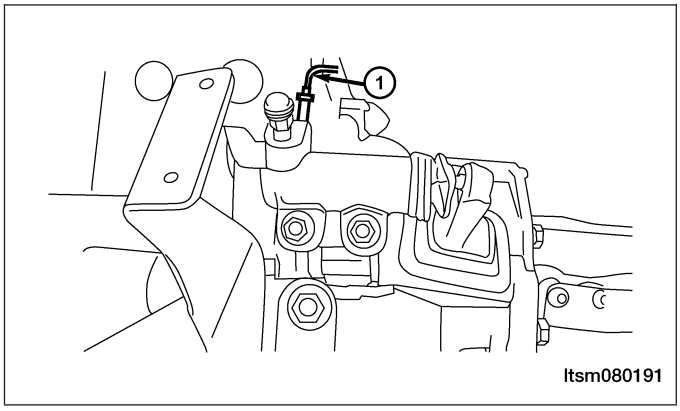

Downloaded from www.Manualslib.com manuals search engine

14. Remove transaxle mount nuts (2) and the transaxle mount bracket bolts (1).
    (Tighten: Transaxle mount nuts to 120 N·m)

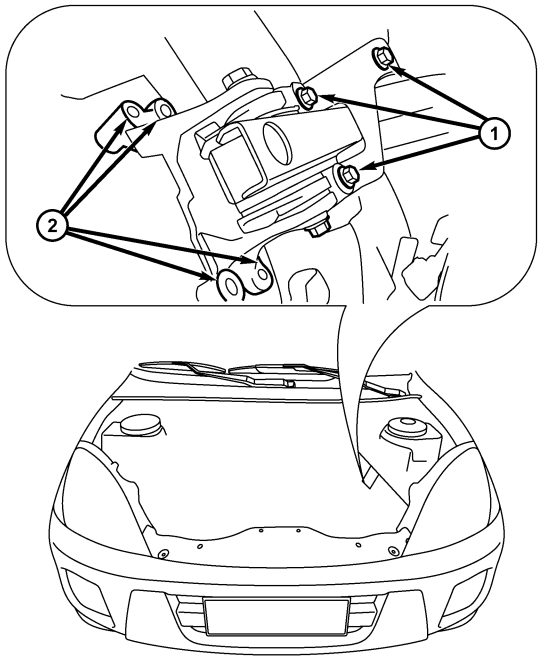

ltsm020156

15. Raise the vehicle.
16. Remove the transaxle drain plug (1) and drain the transaxle fluid.

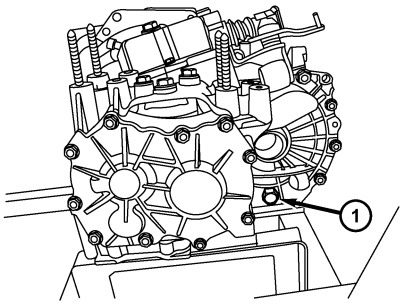

vism030007

17. Remove both front axle shafts (See Front Axle Shaft Removal & Installation in Section 09 Driveline & Axle).
18. Remove the engine undercover and splash shields.
19. Remove the front engine mount bolts (1).
    (Tighten: Front mount bolts to 60 N·m)

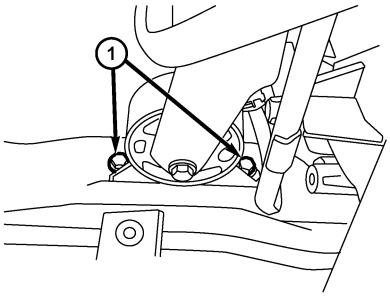

besm080035

Downloaded from www.Manualslib.com manuals search engine

20. Remove the rear engine mount bolts (2) and the rear engine mount bracket bolts (1).
    (Tighten: Rear mount bolts to 40 N·m)

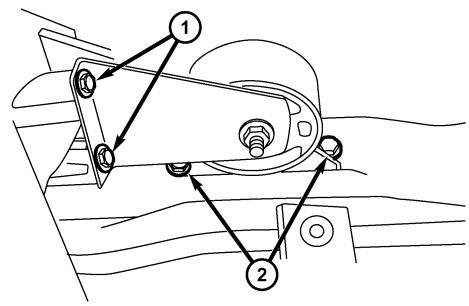

ltsm020188

21. Remove the sub-frame assembly (See Sub-Frame Assembly Removal & Installation in Section 10 Suspension).
22. Remove the engine to transaxle lower bolts (1).
    (Tighten: Transaxle mount bolts to 40 N·m)
23. Separate the transaxle from the engine and remove it from the vehicle.

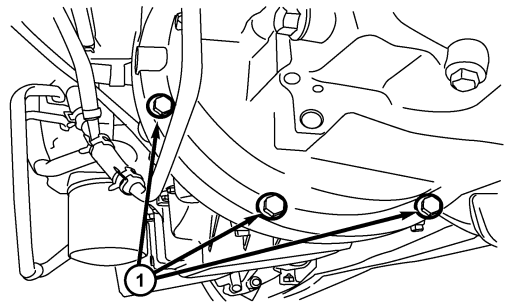

vism080002

WARNING!
Support the transaxle with a suitable jack while removing the transaxle.

24. Installation is in the reverse order of removal.

Installation Notes:

- Refill 2.2L transaxle fluid through the fill hole (1) until the fluid starts to leak from the fill hole.
- After installation, check for any fluid leakage and verify the transaxle fluid level is correct.

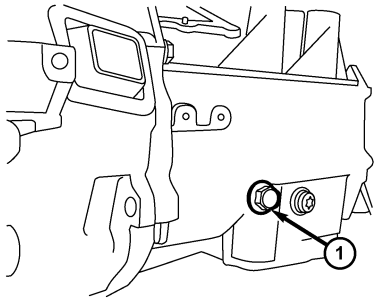

ltsm080189

Downloaded from www.Manualslib.com manuals search engine

Gear Selector & Shifter Assembly

Removal & Installation

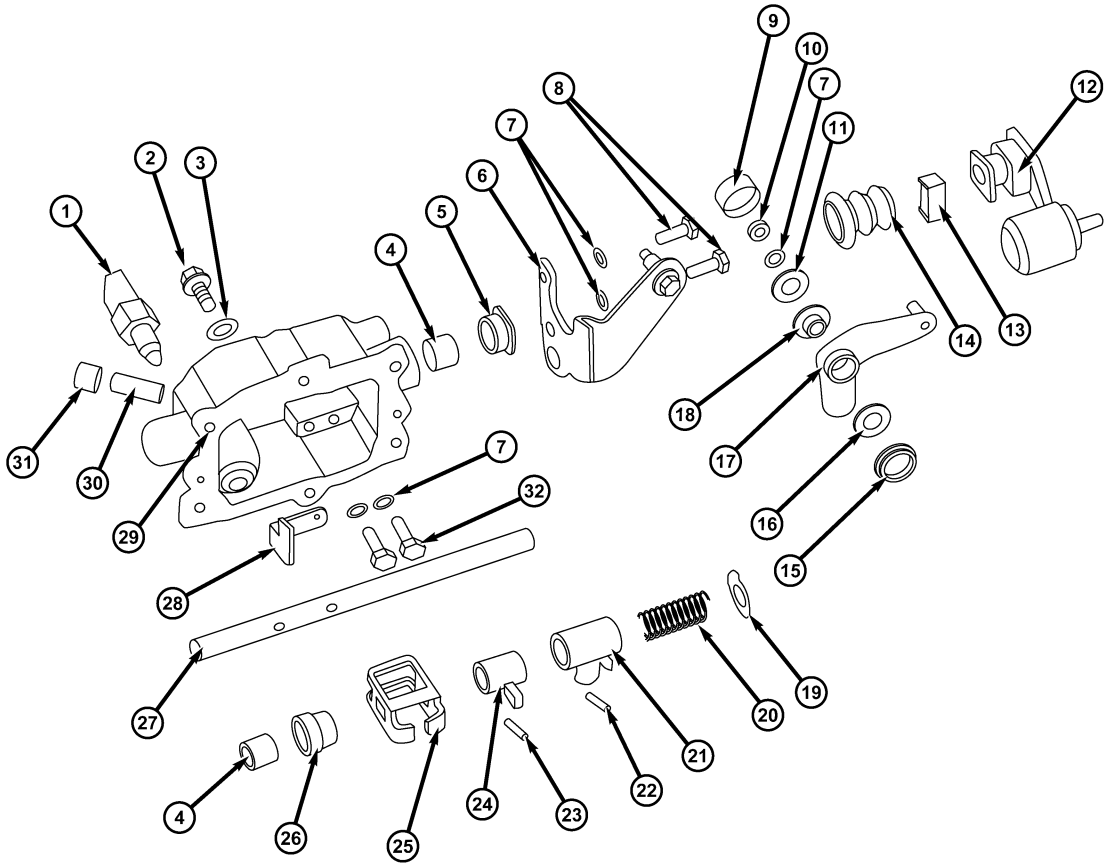

Itsm080087

Downloaded from www.Manualslib.com manuals search engine

1 - Backup Lamp Switch Assembly	17 - Gear Selecting Arm Assembly
2 - Limit Stop Screw-Interlocking Plate	18 - Upper Bushing-Gear Selecting Arm
3 - Plain Washer-Interlocking Plate Limit Stop Screw	19 - Baffle-Rear Neutral Position Return Spring
4 - Bearing-Gear Shift Mechanism	20 - Rear Neutral Retracting Spring
5 - Lower Lining - Selector Lever	21 - Reverse Gear Lock Assembly
6 - Selector Lever Assembly	22 - Reverse Gear Lock Assembly Pin
7 - Washer	23 - Selector Finger Pin
8 - Bolt	24 - Selector Finger
9 - Upper Dust Boot - Selector Lever	25 - Interlock Plate Assembly
10 - Nut	26 - Front Neutral Retracting Spring Assembly
11 - Plain Washer-Gear Selecting Arm Nu	27 - Gearshift Shaft
12 - Gear Shifting Arm Assembly	28 - Retainer-Reverse Gear Lock
13 - Gear Shifting Drive Slider	29 - Gear Shift Mechanism Housing
14 - Dust Cap-Gear Shifting Shaft Fluid Seal	30 - Air Duct
15 - Lower Dust Cap-Gear Selecting Arm	31 - Air Duct Cap
16 - Lower Bushing-Gear Selecting Arm	32 - Bolt

1. Disconnect the negative battery cable.
2. Remove the air cleaner housing assembly.
3. Remove the two shift cables (1) from the transaxle.

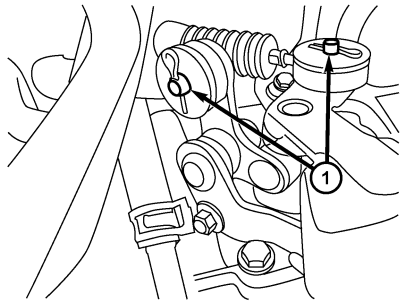

besm080051

4. Remove the shift cable clamp (1) from the shift cable bracket.

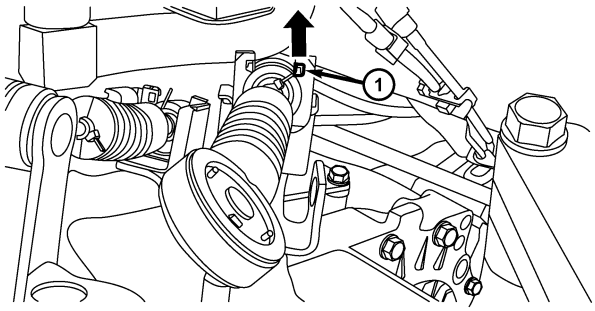

vism080026

5. Raise and support the vehicle.

Downloaded from www.Manualslib.com manuals search engine

6. Remove the gearshift knob.
7. Remove the gearshift boot from the lower console.

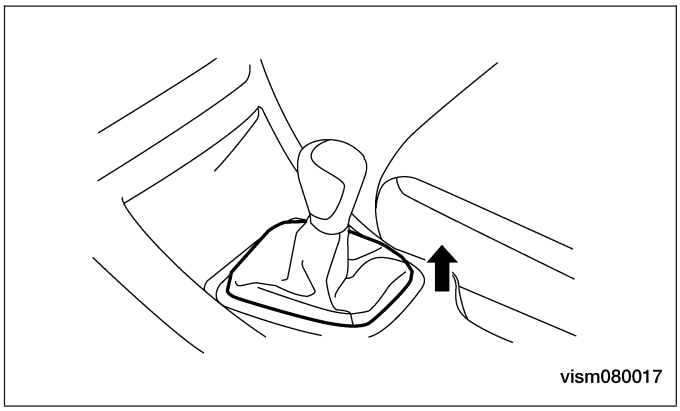

8. Apply the parking brake (apply parking brake handle to clear lower console upon removal).

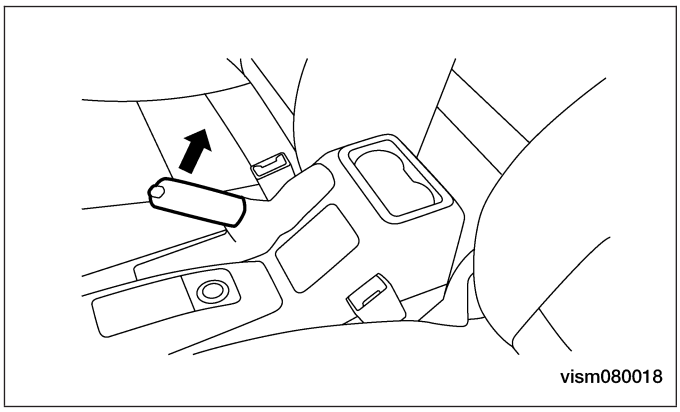

9. Remove the lower console (See Lower Console Removal & Installation in Section 15 Body & Accessories).
10. Remove the clip on the gearshift mechanism and then remove the crossover cable and the selector cable (1) from the gearshift mechanism.

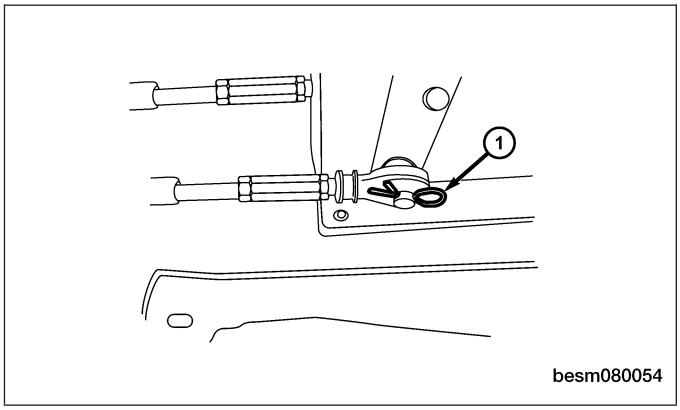

11. Remove the four bolts (1) and then remove the gearshift mechanism from the bracket.

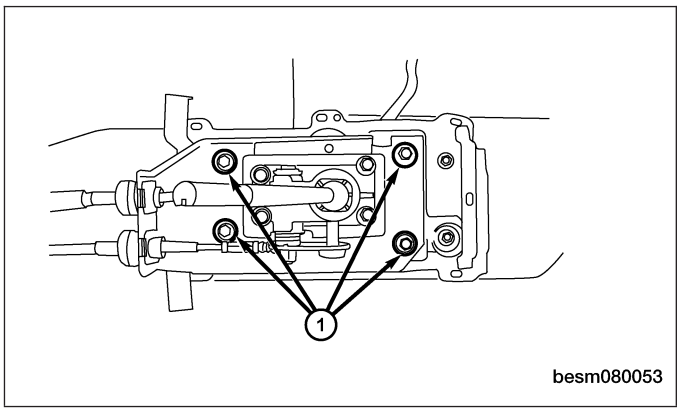

Downloaded from www.Manualslib.com manuals search engine

12. Remove the selector cable clamps (1) and bracket retaining bolts (2).
13. Remove the gear selector & shifter assembly.
14. Installation is in the reverse order of removal.

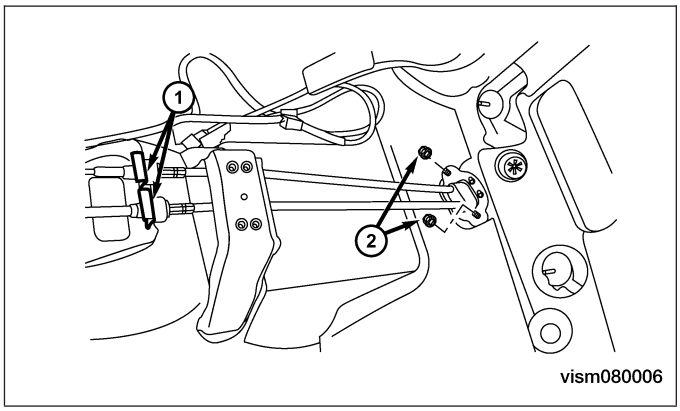

NOTE :
Selector cable can be adjusted with the adjusting bolt (1). Adjust bolts as needed to obtain proper cable adjustment.

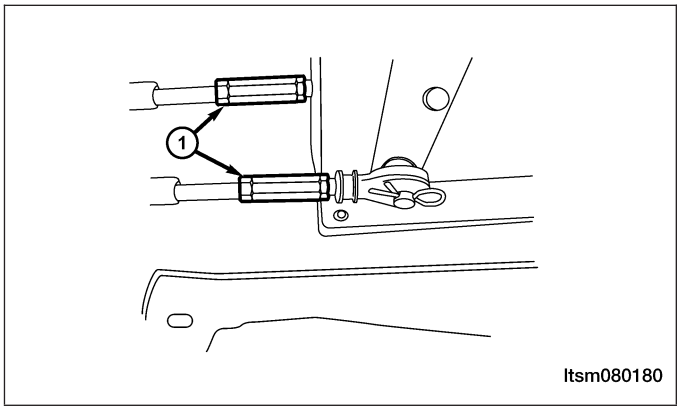

Disassembly

1. Drive out the locking selector finger (1) pin following the direction as shown in the diagram.
2. Drive out the locking pin (2) reverse gear lock assembly pin.
3. Remove all of the components from shaft.
4. Thoroughly clean and check all parts, replace any worn parts as necessary.

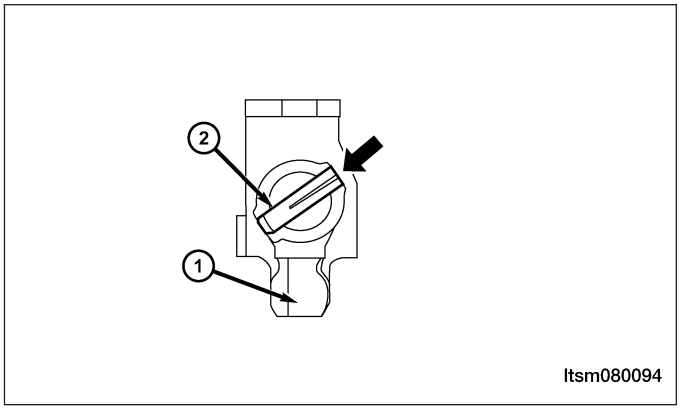

Downloaded from www.Manualslib.com manuals search engine

Assembly

1. Carefully press and fit two gear shift mechanism (1) & (2) bearings to the corresponding position on the gear shift mechanism housing. The bearing (1) should be pressed to the end, both end faces of the bearing should align with the hole end faces of the housing bearing. The side of the bearing with letters should be placed outwards.

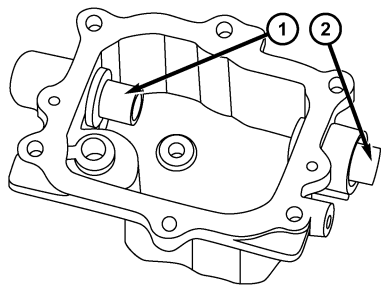

ltsm080138

2. Press the air duct into the housing orifice to ensure the air duct is in the proper position.
3. Press and fit the fluid seal of the gearshift shaft into the fluid seal hole of the housing, ensure the fluid seal is pressed and fitted in position.

NOTE :
Apply transaxle fluid to the fluid lip seal.

4. Install the gearshift shaft through the fluid seal and into the housing of gear shift mechanism.
5. Following the direction of the arrow, install the rear neutral return spring stop, rear neutral return spring, reverse gear lock assembly, selector finger and interlock plate assembly, front neutral return spring assembly onto the gearshift shaft (as shown in the figure). Check the turn-down rims of rear neutral return spring stop, and ensure they have entered into corresponding vent groove of the housing. One end of main body of reverse gear lock with blind hole shall face rear neutral return spring stop. And the small end face of front neutral return spring assembly shall face towards selector finger.

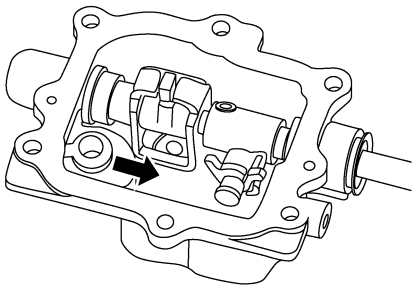
ltsm080139

6. Insert the gearshift shaft into the bearing.
7. Install the reverse gear limiter lock mechanism (1) (as shown in the figure).
   (Tighten: Reverse gear limiter bolt to 22 N·m)

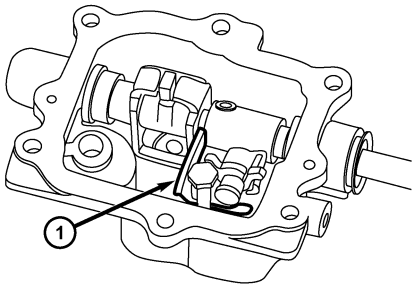

ltsm080140

8. Install the gearshift fluid seal dust boot to the gearshift shaft fluid seal.
9. Install the gearshift lever assembly to the gearshift shaft, then press it in the pin hole of gearshift lever assembly, finally install the pin.

NOTE :
Neither end of the pin is allowed to protrude beyond the two end surfaces of the pin holes.

Downloaded from www.Manualslib.com manuals search engine

10. Align the selector finger (1) and fork shaft spring pin (2), install the spring pin of selector finger (as shown by the arrow in the figure).

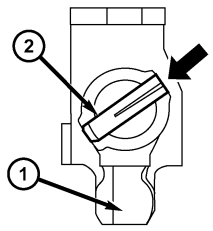

Itsm080094

11. Tighten the interlock plate limit bolt (1) together with the shim to the housing (as shown in the figure). The tightening torque of the bolt is 30 N·m. Check front end circular cylinder of the bolt to ensure it is in the corresponding groove of selector finger.

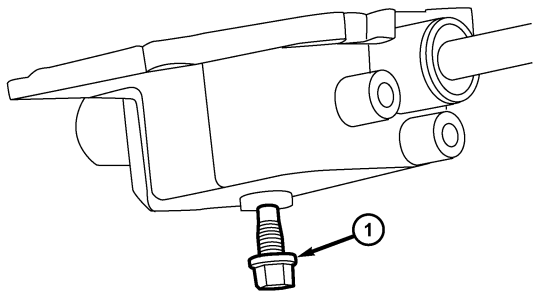

Itsm080128

12. Check the gearshift shaft to ensure it is able to rotate and perform axial movement freely.
13. Install air duct (1) and air duct cap (2). Apply sealant to the surface of the inserted part of air duct.

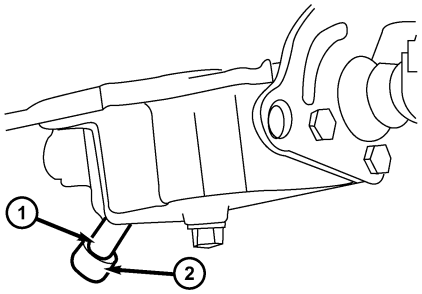

Itsm080134

14. Install the backup light switch assembly (1). (Tighten: Backup light switch to 32 N·m)

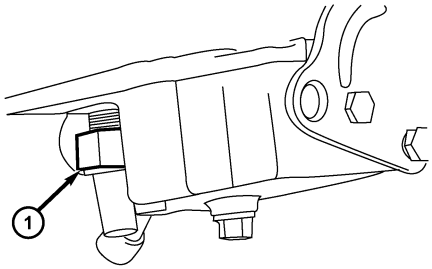

Itsm080135

Downloaded from www.Manualslib.com manuals search engine

MANUAL TRANSAXLE UNIT REPAIR

Transaxle

Specifications

Torque Specifications

DESCRIPTION	TORQUE (N·m)
Gear Shift Mechanism Housing Bolt	18
Gear Positions Self-Locking Bolt	35
Reverse Gear Bolt	20
Reverse Gear Cap Bolt	20
Rear Transaxle Bearing End-Plate Bolt	6.9
Transaxle To Clutch Housing Bolt	44
Bearing Input Shaft Bolt	18

Disassembly

1. Place the transaxle on a workbench.
2. Remove the clutch fork (2) and remove the release bearing (1).
   NOTE: The release bearing (1) is not serviceable.

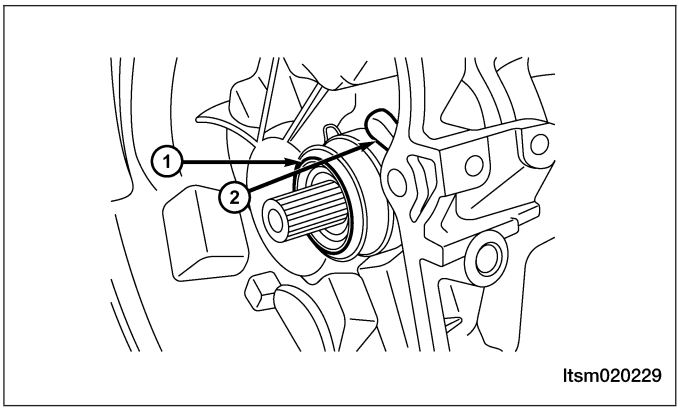

3. Set the transaxle gear in the neutral position. Remove the gear shift mechanism housing retaining bolts (1), and remove the gear shift mechanism housing.
   (Tighten: Gear shift mechanism housing bolts to 18 N·m)

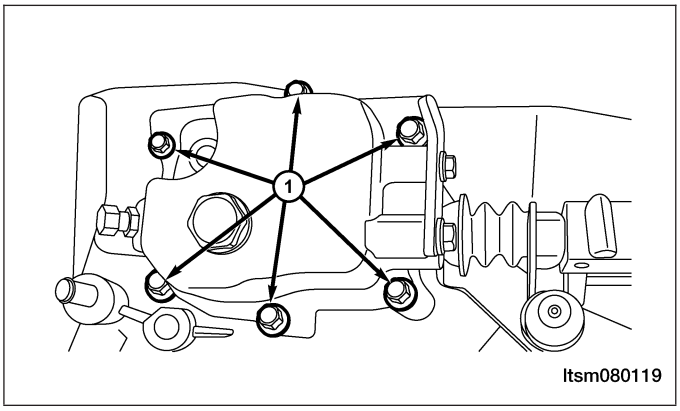

Downloaded from www.Manualslib.com manuals search engine

4. Remove the three gear positions self-locking bolts (1).
   (Tighten: Three gear positions self-locking bolts to 35 N·m)

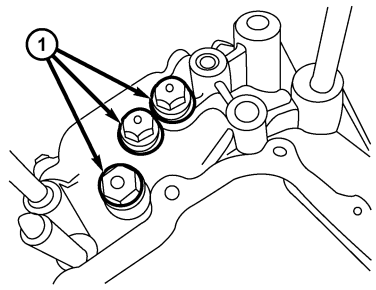

ltsm080120

5. Remove the reverse gear bolt (1).
   (Tighten: Reverse gear bolt to 20 N·m)

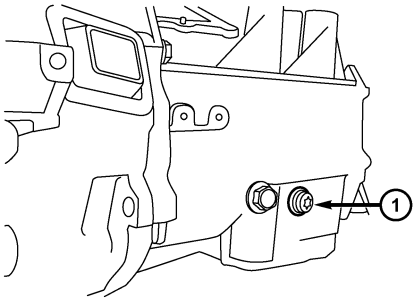

ltsm080121

6. Remove the 6 reverse gear cap bolts (1), and remove the cap.
   (Tighten: Reverse gear cap bolts to 20 N·m)

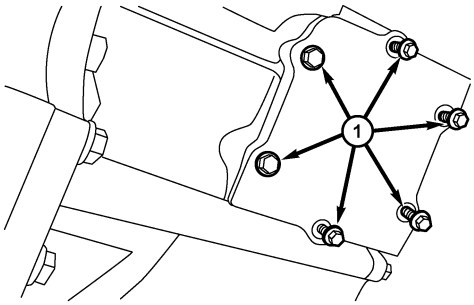

ltsm080122

7. Gently pry the idler gear downward using a screwdriver, and then remove the idler gear assembly.

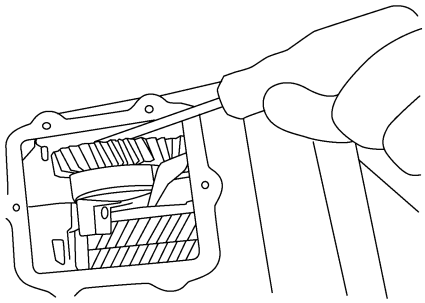
ltsm080123

Downloaded from www.Manualslib.com manuals search engine

8. Remove the 10 rear transaxle bearing end-plate bolts (1), and then remove the bearing cap.
(Tighten: Rear transaxle bearing end-plate bolts to 6.9 N·m)

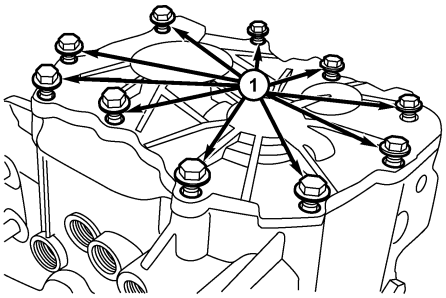

ltsm080124

9. Remove shaft clip (3) and shaft clip (1) from the shafts, and then remove bearing collar (2).

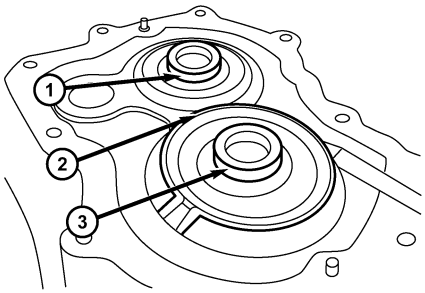

ltsm080125

10. Remove the transaxle to clutch housing bolts (1), and then use a pry bar to remove the transaxle housing.
(Tighten: Transaxle to clutch housing bolts to 44 N·m)

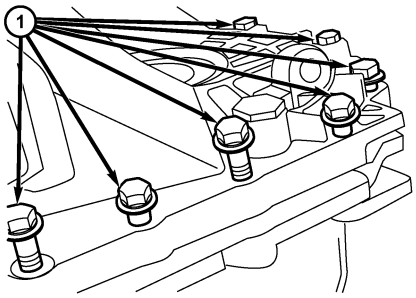

ltsm080126

11. Perform the following steps to remove the transaxle housing (1).

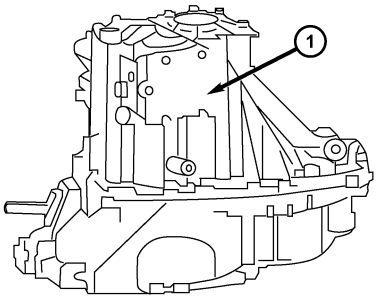

ltsm080022

Downloaded from www.Manualslib.com manuals search engine

12. Tap the transaxle housing and use a suitable tool to remove the transaxle housing.

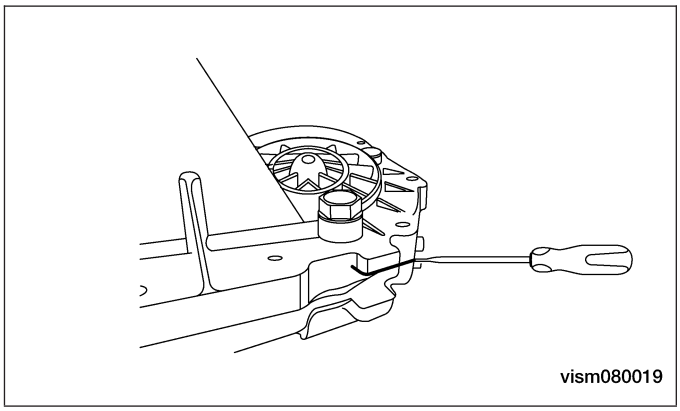

13. Remove the 3 front bearing input shaft bolts (1). (Tighten: Bearing input shaft bolts to 18 N·m)

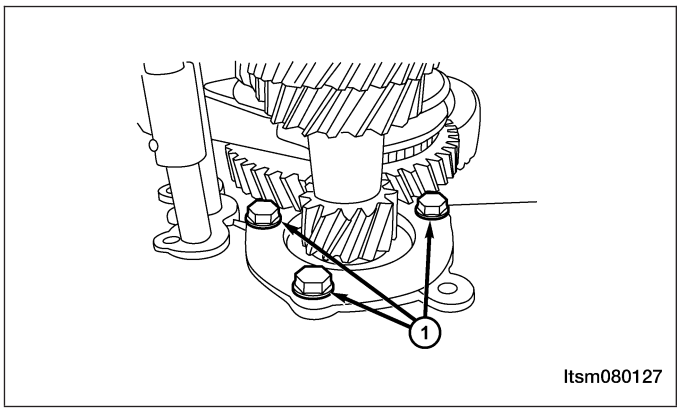

14. Grasp the input shaft assembly, output shaft assembly, 1st-2nd shift fork, 3rd-4th shift fork and 5th-reverse fork shaft together and remove.
15. Remove the differential assembly (1) upward (as shown in the figure).

    NOTE: Pre-tighten the shim of the differential cone bearing.

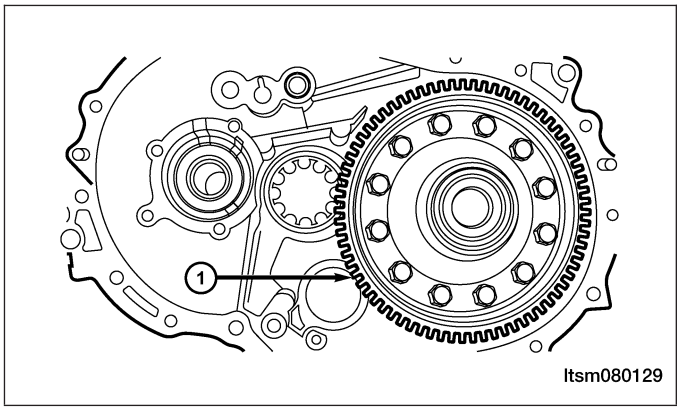

16. Remove the magnet (1) and wipe the magnet clean.

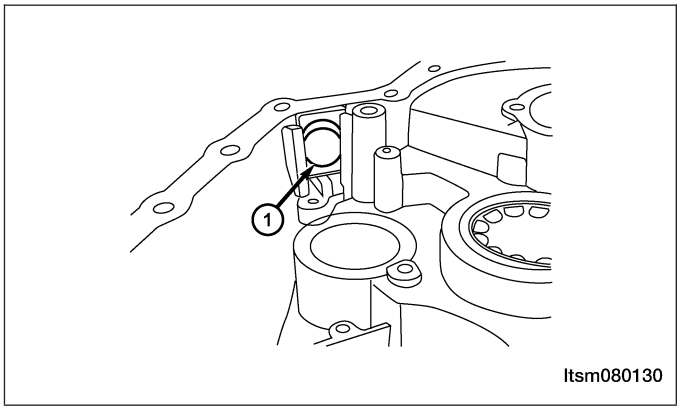

Downloaded from www.Manualslib.com manuals search engine

Inspection

1. Place a tin solder sheet (1) (approximate length is 10 mm and diameter is 1.6 mm) on the specified part of the transaxle housing, and then install the differential outer bearing race.
2. Install the clutch housing, and tighten the bolts to the specified torque.
3. Replace the tin solder sheets with thicker tin solder sheets.

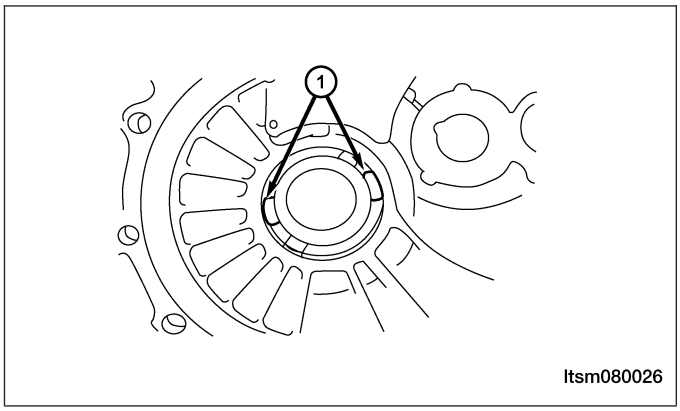

4. With a micrometer, measure the thickness (T) of the flattened tin solder sheet.
   - Select the thickness of the shim to be installed according to the following equation.
     – Thickness of washer: (T + 0.005 mm) - (T + 0.11 mm)

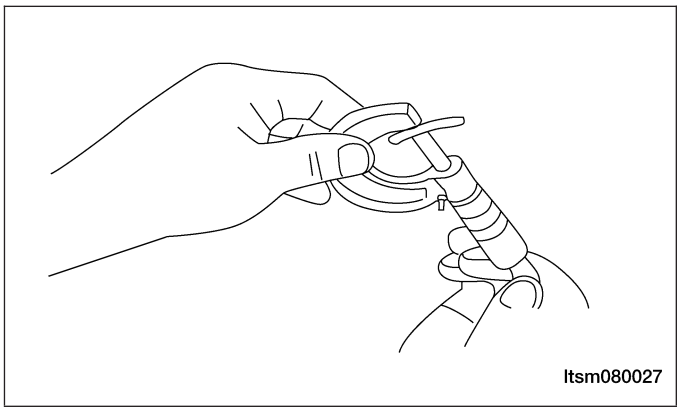

5. Do not clean the release bearing.
6. Clean the sealing surface of all contaminates, remove all old sealant, and clean all bolt holes.
7. Check all parts for damage, replace any damaged parts if necessary.
8. Always align the bearing cap (1) with the shaft opening. Align the bearing collar to the bearing cap opening (as the two circular rings indicate in the figure).

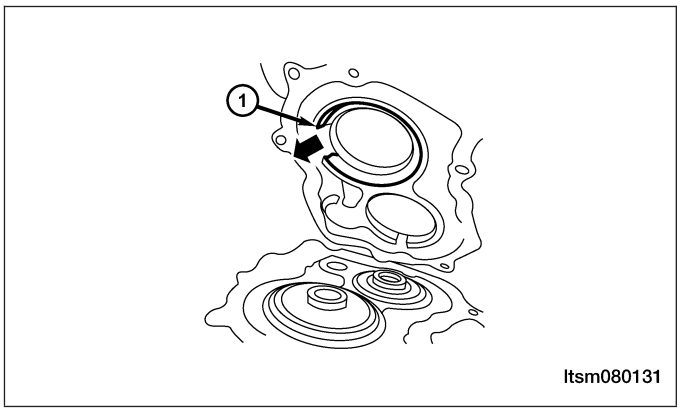

Downloaded from www.Manualslib.com manuals search engine

9. Place the transaxle in the neutral position when installing the self-locking bolts for the gear positions. The notches (1) of the shift fork guide block should align in the same line.

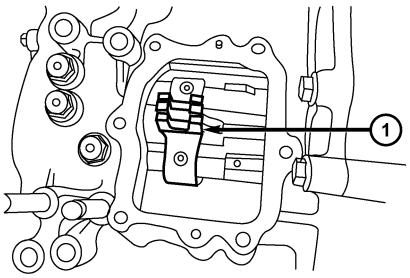

ltsm080132

10. Place the transaxle in the neutral position (1) when the gear shift mechanism housing assemble is in the position of the selector finger in the gear shift mechanism housing assembly shown in the figure.

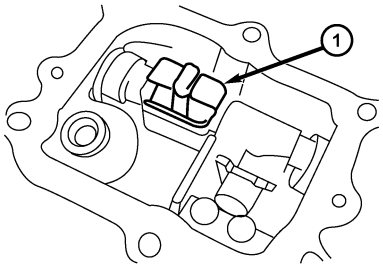

ltsm080133

11. Alternate tightening each bolt to the specified torque.

Assembly

1. Install the input shaft together with the output shaft.
2. Install the 5th-reverse gear shifting fork/fork stalk-5th-reverse gear fork/3rd-4th gear shifting fork/fork stalk–3rd-4th fork.
3. Move the gear bushing-3rd-4th gear (1) and the gear bushing-5th-reverse gear (2) in the direction shown in the figure.

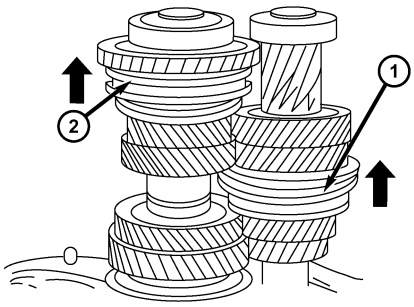

ltsm080028

Downloaded from www.Manualslib.com manuals search engine

4. Install the 3rd-4th gear shifting fork (2) and its fork stalk (1) and the 5th-reverse gear shifting fork (3) and its stalk (4).

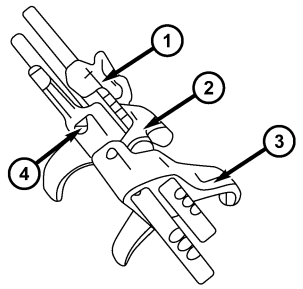

ltsm080029

5. Install all gear shifting forks into the gear hub, and at the same time, move the fork stalks (1) & (2) in the direction shown in the figure.

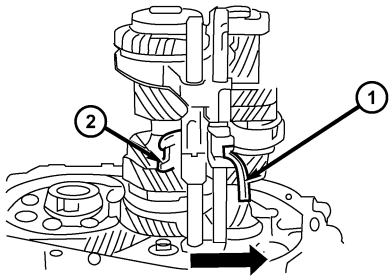

ltsm080024

6. Install the locking pin.

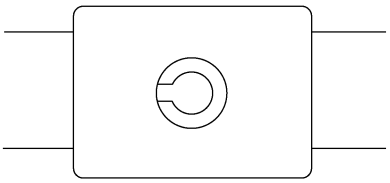
ltsm080030

7. Using special tools MB-990938 (1) and MB-990935 (2), install the outer bearing race.

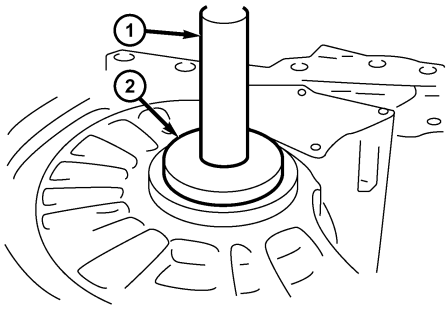

ltsm080031

Downloaded from www.Manualslib.com manuals search engine

8. Install the transaxle housing.
9. Apply a 1 mm to 1.2 mm diameter of sealant on the specified position of the transaxle housing.

CAUTION:
The sealant line applied should be uniform and continuous and without breaks.

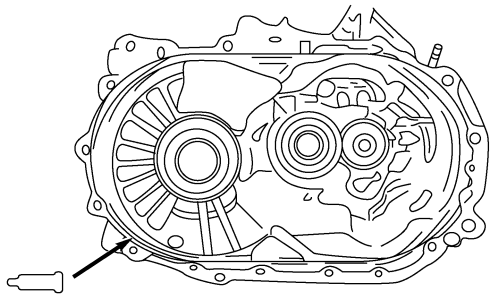

ltsm080032

10. Tighten the transaxle housing bolts to the specified torque.
11. Install the bottom transaxle cover.
12. Apply a 1 mm to 1.2 mm diameter of sealant on the specified position of the transaxle housing.

CAUTION:
The sealant line applied should be uniform and continuous and without breaks.

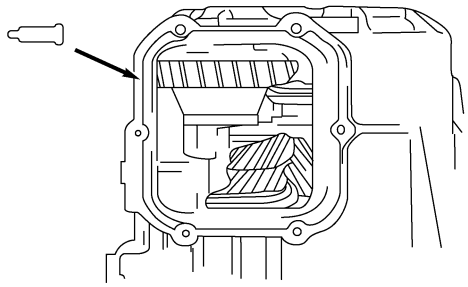

ltsm080033

13. Apply transaxle fluid to the O-ring of speed sensor. (Transaxle fluid: 75W-90)

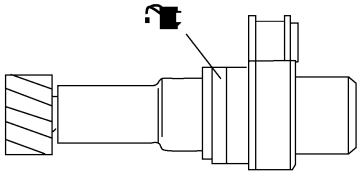

ltsm080034

Downloaded from www.Manualslib.com manuals search engine

14. Install the vehicle speed sensor.
15. Install the gear shifting arm assembly. Apply lubricating fluid on the contact surface of the gear shifting drive slider and the gear shifting arm assembly. (The specified lubricating fluid: Mobilux Ep2)

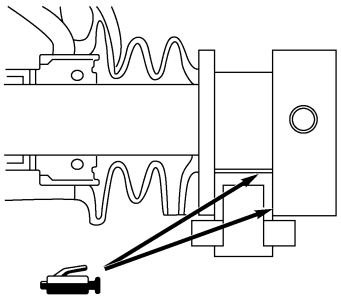

ltsm080035

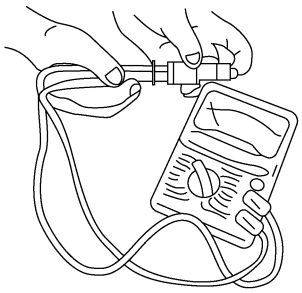

ltsm080036

STATUS OF SWITCH	CIRCUIT
Pressed	Off
Released	On

16. Inspect the backup lamp switch. Inspect the switch for broken terminal or an open circuit.

Input Shaft

Specifications

Clearance Specifications

SYNCHRONIZER RING	VALUE OF A (mm)	WEARING LIMIT
1st-2nd Gear	1.10 - 1.17	0.05 mm
3rd-4th Gear	1.35 - 1.90	0.05 mm
5th Gear	1.10 - 1.17	0.05 mm

Downloaded from www.Manualslib.com manuals search engine

Disassemble

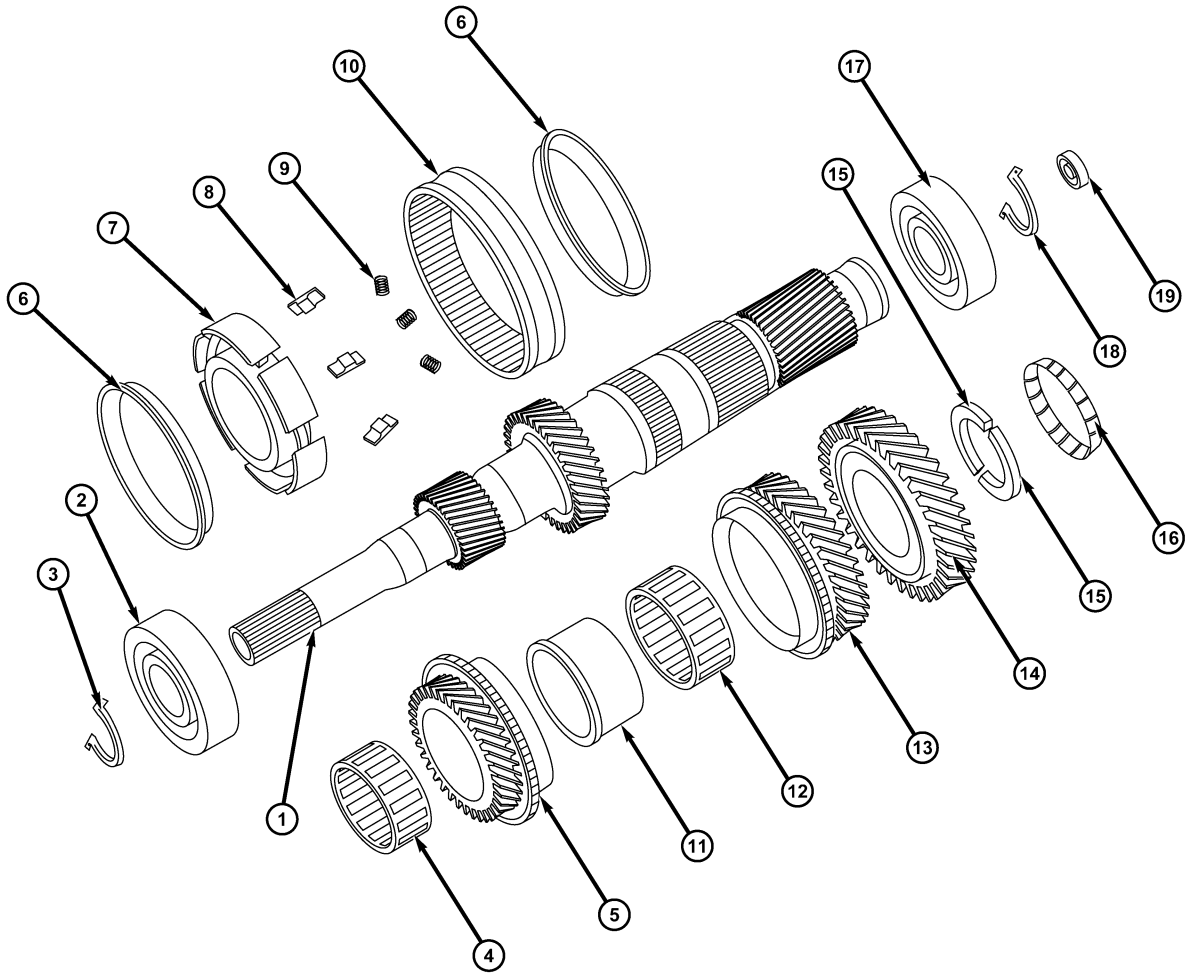

1 - Input Shaft	11 - Gear Bushing-4th Gear
2 - Input Shaft Front Bearing	12 - Needle Bearing-2nd-4th Gear
3 - Snap Ring	13 - 4th Driving Gear Assembly
4 - Needle Bearing-3rd Gear	14 - 5th Driving Gear
5 - 3rd Driving Gear Assembly	15 - Thrust Ring-5th Driving Gear
6 - Synchronizer Ring-3rd-4th Gear	16 - Clip-5th Driving Gear Thrust Plate
7 - Gear Hub-3rd-4th Gear	17 - Input Shaft Rear Bearing
8 - Guide Block	18 - Snap Ring-Input Shaft Rear Bearing
9 - Spring-3rd-4th Gear Synchronizer	19 - Seal-Input Shaft Fluid-Collecting Hole
10 - Hub Sleeve-3rd-4th Gear	

Downloaded from www.Manualslib.com manuals search engine

NOTE :
The following special tools are required to perform the repair procedure:
- MB-998801 - Bearings Remover
- MB-998812 - Installer Cap
- MB-998813 - Installer (100 mm)
- MB-998816 - Installer Connector (30 mm)
- MB-998825 - Installer Connector (52 mm)
- MB-998824 - Installer Connector (50 mm)

1. Using special tool MB-998801 (1), disassemble the input shaft rear bearing.

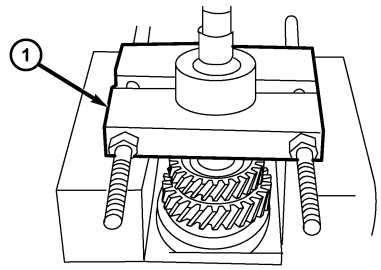

ltsm080038

2. Using special tool MB-998801 (1), disassemble the 5th driving gear.

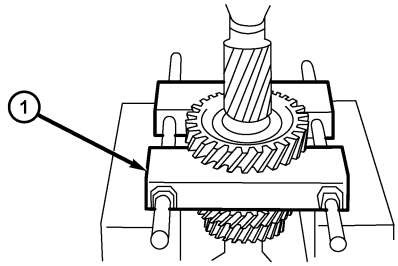

ltsm080039

3. Disassemble the sleeve-4th gear.
   Mount special tool MB-998801 (1) on the 3rd driving gear to disassemble the sleeve-4th gear.

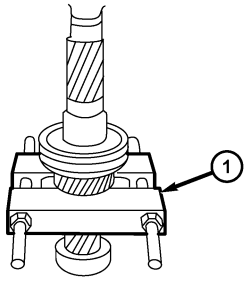

ltsm080040

Downloaded from www.Manualslib.com manuals search engine

4. Using special tool MB-998801 (1), disassemble the input shaft front bearing.

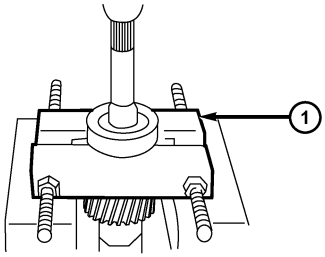

ltsm080041

Assemble

1. Install the input shaft seal.
   Press the seal in until the dimension shown in the figure is obtained.

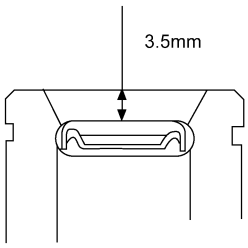

ltsm080042

2. Using special tools MB-998801 (4), MB-998812 (1), MB-998813 (2) and MB-998816 (3), install the input shaft front bearing.

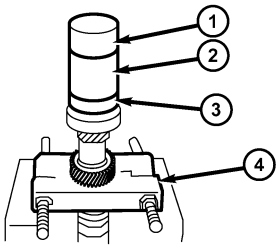

ltsm080043

3. Install the input shaft front shaft snap ring.
   Select a snap ring to maintain the axial clearance standard.
   (The standard value: 0.01 mm - 0.12 mm)

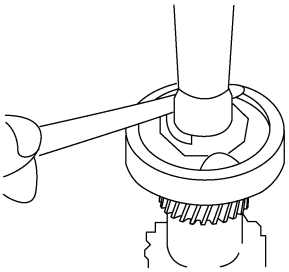

ltsm080044

Downloaded from www.Manualslib.com manuals search engine

4. Install the synchronizer spring.
   Install the synchronizer spring in the specified position of the synchronizer ring, shown in the figure.

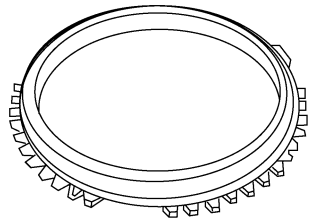

ltsm080045

5. Install the gear hub-3rd-4th gear.
   Install the gear hub-3rd-4th gear in the direction shown in the figure.

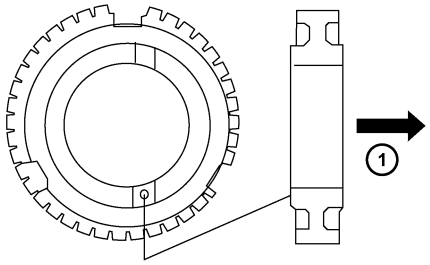

ltsm080046

CAUTION:
Ensure that the synchronizer ring is not locked when installing the gear hub.

6. Using special tools MB-998801 (4), MB-998812 (1), MB-998813 (2) and MB-998825 (3), install the gear bushing-3rd-4th gear.

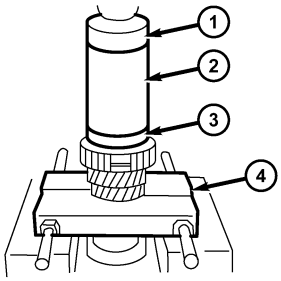

ltsm080047

7. Install the hub sleeve in the direction shown in the figure.

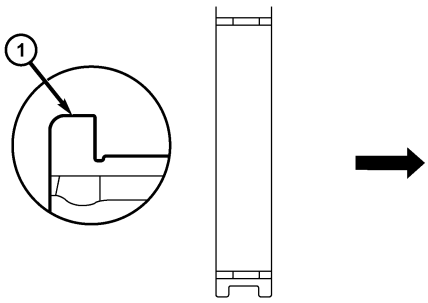

ltsm080048

Downloaded from www.Manualslib.com manuals search engine

8. Ensure that these two deep tooth spaces of gear hub (1) & (2) are correctly aligned with the two high racks of the gear hub during the installation of gear bushing.

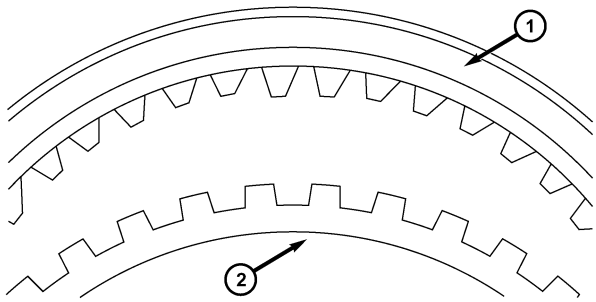

ltsm080049

9. Using special tools MD-998801 (4), MD-998812 (1), MD-998813 (2), and MD-998824 (3), install the sleeve-4th gear.

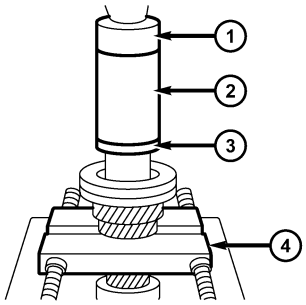

ltsm080050

10. Using special tools MD-998801 (4), MD-998812 (1), MD-998813 (2), and MD-998824 (3), install the 5th driving gear.

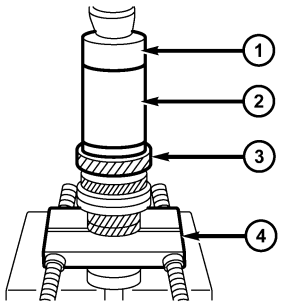

ltsm080051

11. Installation of transaxle housing assembly.
Select the thickness of the thrust plate (1) 5th driving gear to maintain the proper axial clearance of input shaft 5th driving gear shaft.
(The Standard Value: 0.01 mm to 0.09 mm)

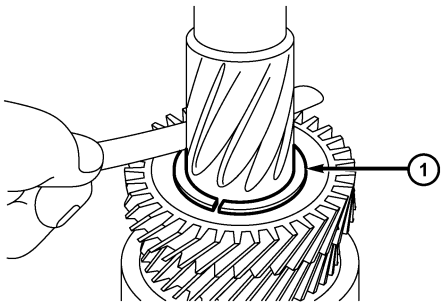

ltsm080052

Downloaded from www.Manualslib.com manuals search engine

12. Install the clip-5th driving gear thrust plate (1).
    Ensure that the thrust plate doesn't tilt when installing the clip.

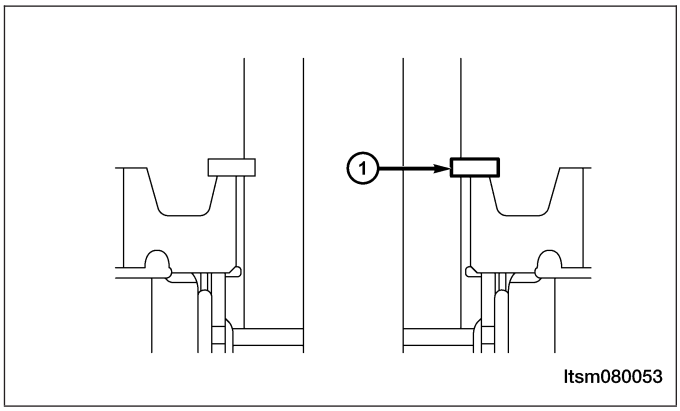

13. Using special tools MD-998801 (3), MD-998812 (1) and MD-998818 (2), install the input shaft rear bearing.

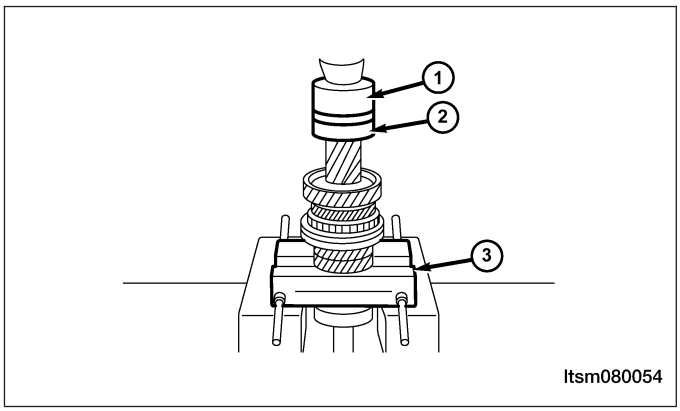

14. Install the snap ring.
    Select the thickness of snap ring (1) to maintain the proper axial clearance of input shaft rear bearing.
    (Standard Value: 0.01 mm to 0.12 mm)

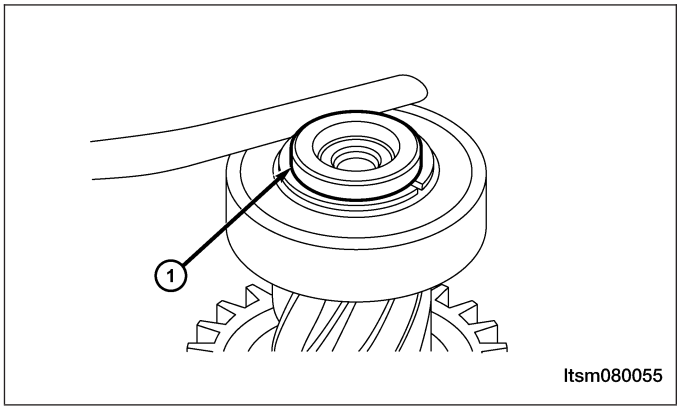

Downloaded from www.Manualslib.com manuals search engine

Inspection

1. Input Shaft
   - Inspect the external surface of the input shaft and needle bearings (1) for any damage or excessive wear.
   - Inspect the input shaft spline for any damage or excessive wear.

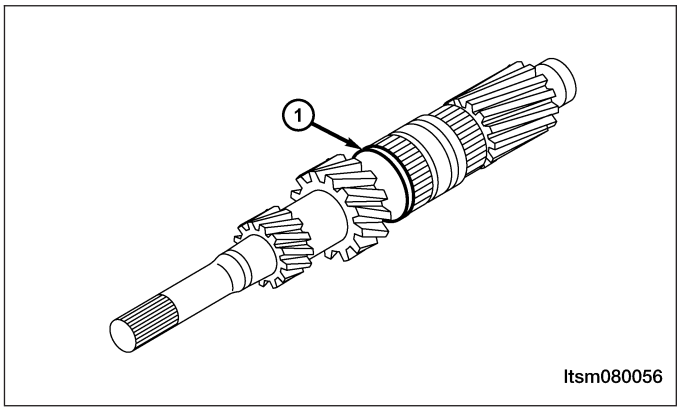

2. Needle Bearing
   Inspect the input shaft and gears for smooth operation.
3. Synchronizer Ring
   - Inspect the synchronizer rings for any damage or signs of breakage in the surface of synchronizer rings.

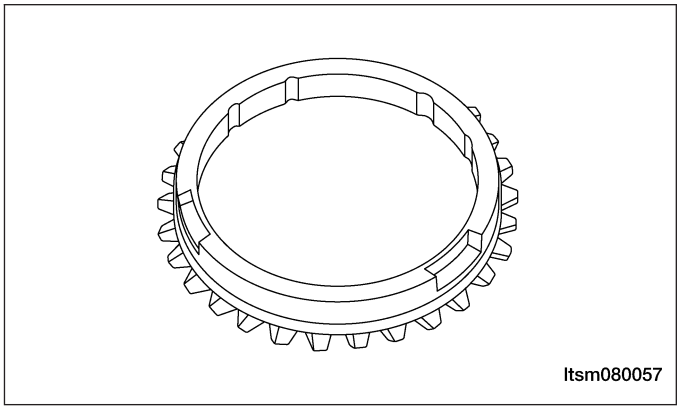

   - Press synchronizer ring (1) 3rd-4th gear (2), and then examine the clearance “A”. If the “A” is less than the limit value, the synchronizer ring and 3rd-4th gear should be replaced.(Limit Value: 0.5 mm)

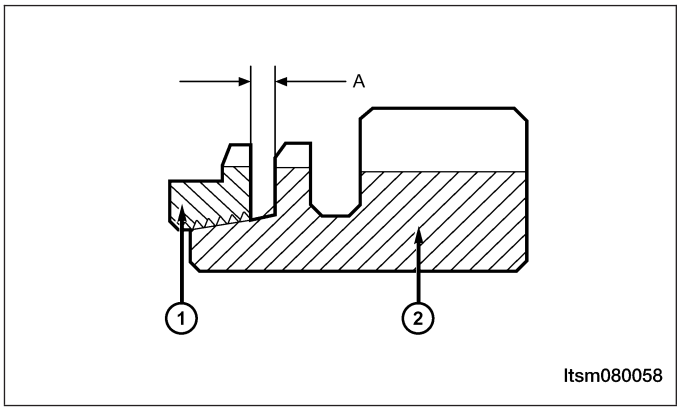

1 - Synchronizer Ring
2 - Gear

Downloaded from www.Manualslib.com manuals search engine

4. Gear Hub and Hub of Synchronizer
   - Assemble the gear bushing together with the gear hub of synchronizer, and then inspect for smooth operation without lockup.
   - Inspect the front/rear of the interior surface of the gear bushing for any damage.
   - Inspect the synchronizer springs for any weak springs or damage.

     NOTE: If it is necessary to replace the gear bushing and gear hub of the synchronizer, they are only serviced as a complete set.

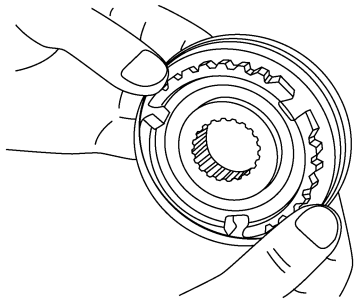

ltsm080059

5. 3rd-4th Driven Gear
   - Inspect the gear surface of the skew gear and clutch gear (1) for any damage.
   - Inspect the conical surface of the synchronizer (2) for thickening, damage or wear.
   - Inspect the internal diameter of the front/rear surface of the gear.

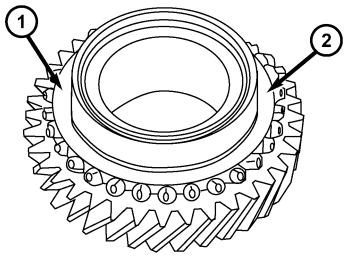

ltsm080085

Downloaded from www.Manualslib.com manuals search engine

Output Shaft

Disassemble

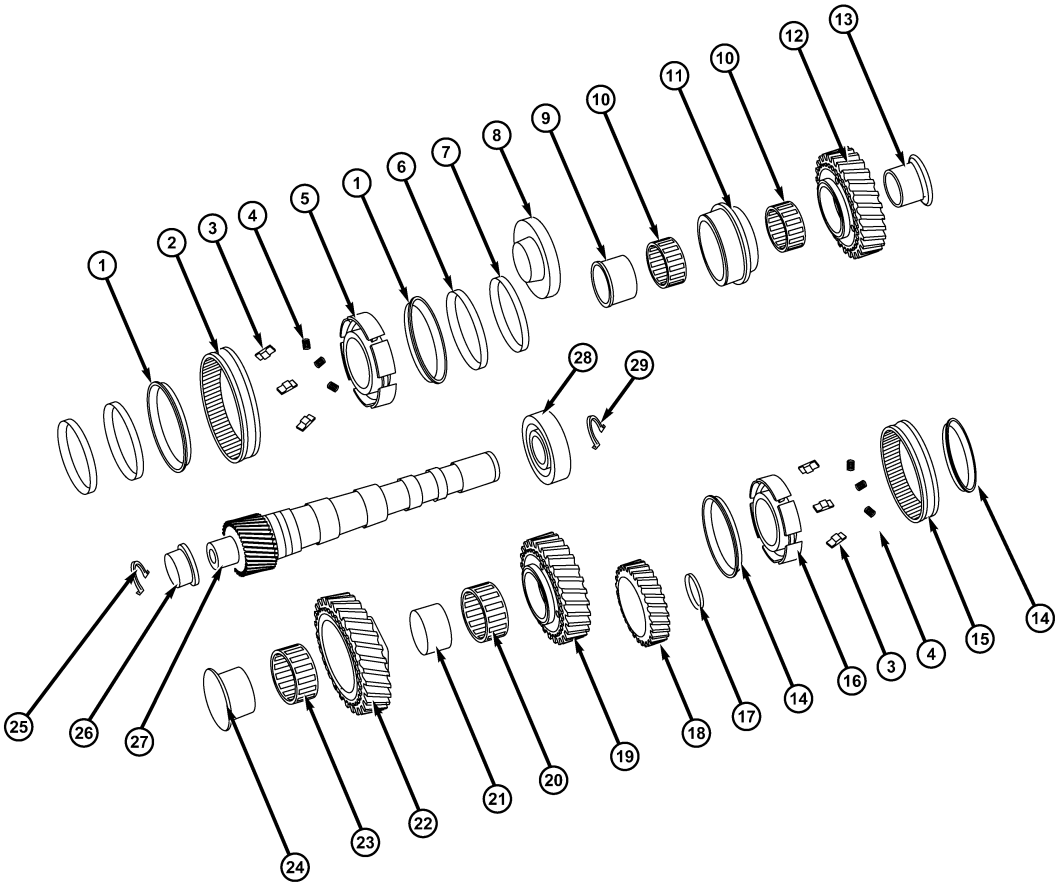

1 - Outer Ring-1st-2nd Synchronization Ring	16 - Gear Hub-5th-Reverse Gear
2 - Gear Hub Sleeve-1st-2nd Synchronizer	17 - Snap Ring-3rd Driven Gear
3 - Guide Block	18 - 3rd Driven Gear
4 - Spring-1st-2nd Gear And 5th-Reverse Gear Synchronizer	19 - 2nd Driven Gear Assembly
5 - Gear Hub-1st-2nd Gear	20 - Needle Bearing-2nd Gear
6 - Steel Ring-1st-2nd Synchronization Ring	21 - Sleeve-2nd Gear
7 - Inner Ring-1st-2nd Synchronization Ring	22 - 1st Driven Gear Assembly
8 - 4th Driven Gear	23 - Needle Bearing-1st Gear
9 - Gear Bushing-5th Gear	24 - Sleeve-1st Gear
10 - Needle Bearing-Reverse Gear	25 - Snap Ring-Output Shaft Front Bearing
11 - 5th Driven Gear Assembly	26 - Output Shaft Front Bearing
12 - Reverse Driven Gear Assembly	27 - Output Shaft
13 - Sleeve-Reverse Gear	28 - Output Shaft Rear Bearing
14 - Synchronization Ring-3rd-4th Gear And 5th-Reverse Gear	29 - Snap Ring-Output Shaft Rear Bearing
15 - Gear Hub Sleeve-5th-Reverse Gear	

Downloaded from www.Manualslib.com manuals search engine

NOTE :
The following special tools are required to perform the repair procedure:
- MB-998801 - Bearing Remover
- MB-998812 - Installer Cap
- MB-998814 - Installer Connector (200 mm)
- MB-998813 - Installer (100)
- MB-998818 - Installer Connector (38 mm)
- MB-998819 - Installer Connector (40 mm)
- MB-998822 - Installer Connector (46 mm)
- MB-998825 - Installer Connector (52 mm)

1. Using special tool MB-998917 (2), disassemble the output shaft rear bearing (1).

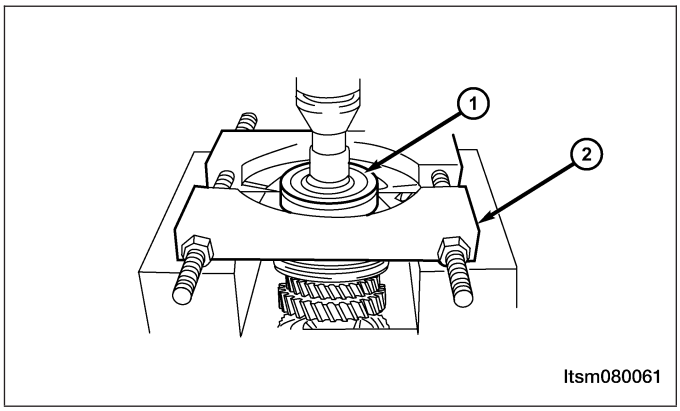

2. Disassemble the reverse gear sleeve (1).
   Install special tool MB-998801 (2) on the reverse driven gear, and then disassemble the sleeve.

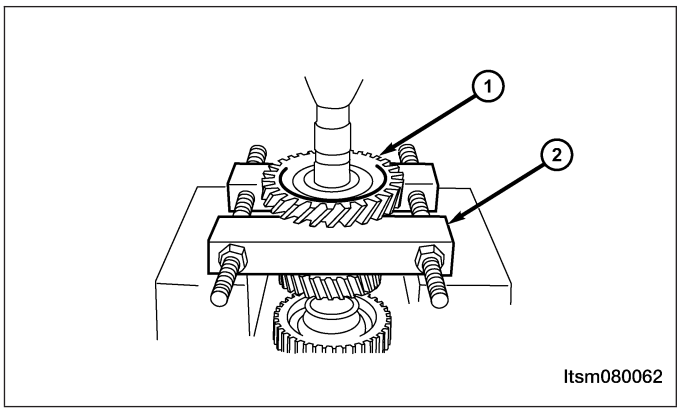

3. Disassemble the 5th-reverse gear synchronizer hub (1).
   Install special tool MB-998801 (2) on the 4th driven gear, and then disassemble the gear hub-5th-reverse gear.

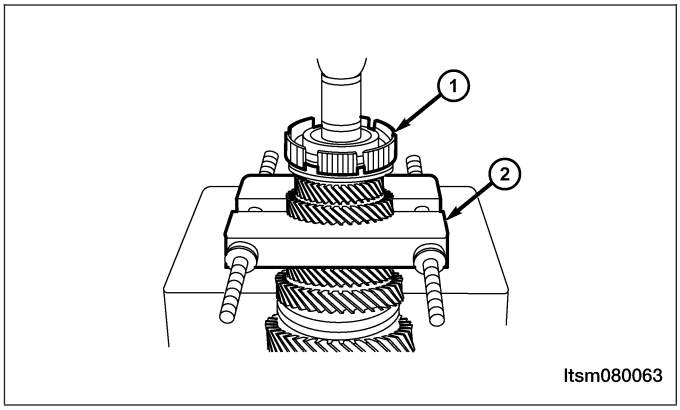

Downloaded from www.Manualslib.com manuals search engine

4. Disassemble the 3rd driven gear (1).
   Install special tool MB-998917 (2) on the 2nd driven gear, and then disassemble the 3rd driven gear.

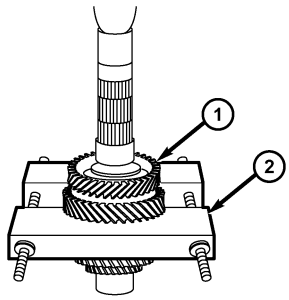

ltsm080064

5. Disassemble the sleeve-2nd gear (1).
   Install special tool MB-998917 (2) on the 1st driven gear, and then disassemble the sleeve-2nd gear.

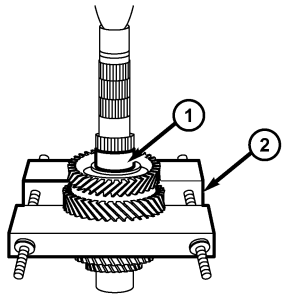

ltsm080065

6. Using special tool MB-998801 (2), disassemble the sleeve-1st gear (1).

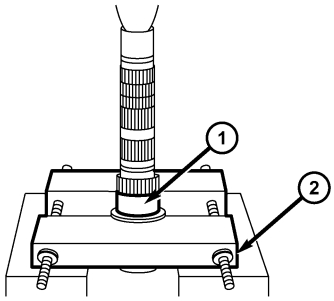

ltsm080066

7. Using special tool MB-998917 (2), disassemble the output shaft front bearing race (1).

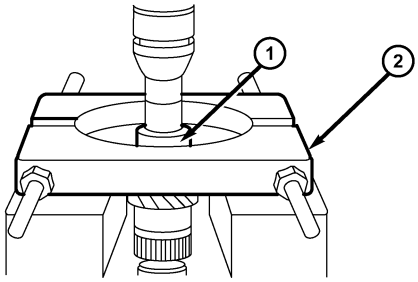

ltsm080067

Downloaded from www.Manualslib.com manuals search engine

Assemble

1. Using special tools MB-998801 (4), MB-998812 (1) and MB-998818 (2), install the output shaft front bearing race (3).

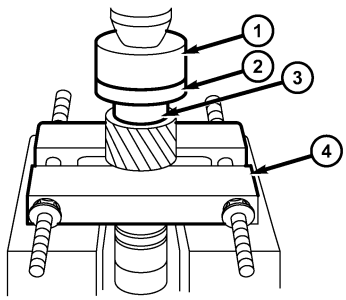

ltsm080068

2. Install the snap ring-output shaft front bearing (1). Select the snap ring and install it to maintain the proper axial clearance of the output shaft front bearing.
(Standard Value: 0.01 mm to 0.12 mm)

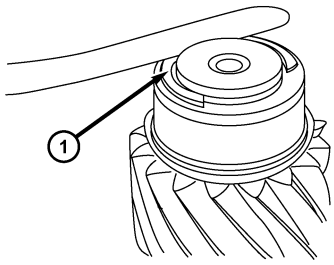

ltsm080069

3. Using special tools MB-998812 (1), MB-998814 (2) and MB-998825 (3), install the sleeve-1st gear (4).

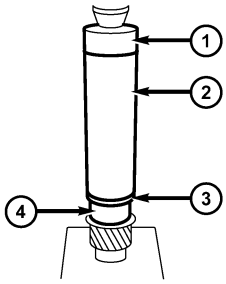

ltsm080070

4. Install the 1st-2nd gear synchronization ring.
Install the 1st-2nd gear synchronizer ring correctly on the specified position of synchronizer ring shown in the figure.

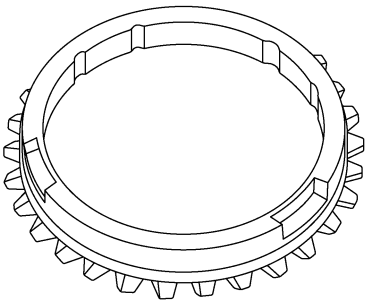
ltsm080057

Downloaded from www.Manualslib.com manuals search engine

5. Install the gear hub-1st-2nd gear.
   Install the gear hub-1st-2nd gear in the position (1) shown in the figure.

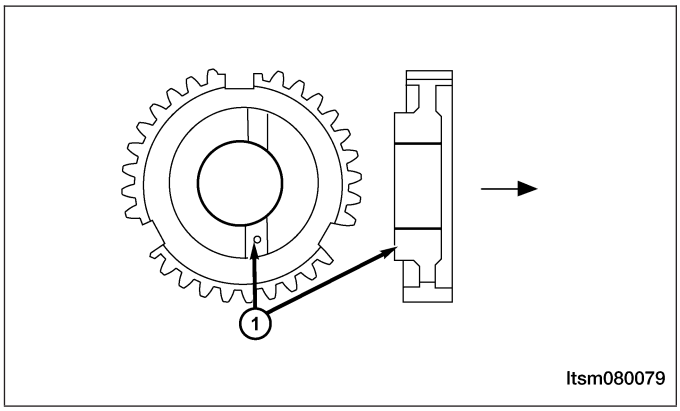

CAUTION:
Using special tools MD-998814 (1), MD-998815 (2) and MD-998825 (3), install the synchronizer ring (4). Ensure that the synchronizer ring is not locked when installing the gear hub.

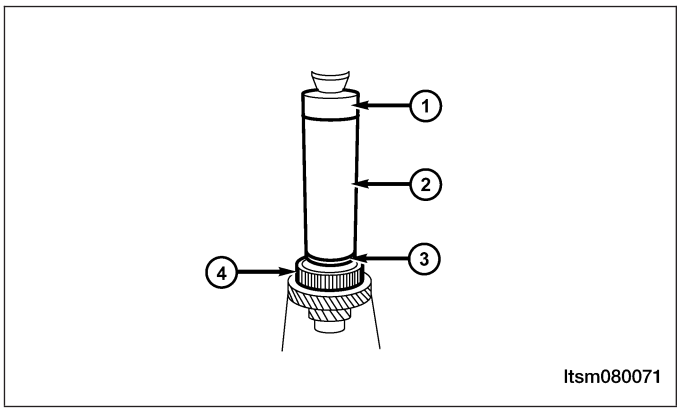

6. Install the gear hub sleeve-1st-2nd gear synchronizer.
   - Install the gear bushing on the position (1) shown in the figure.

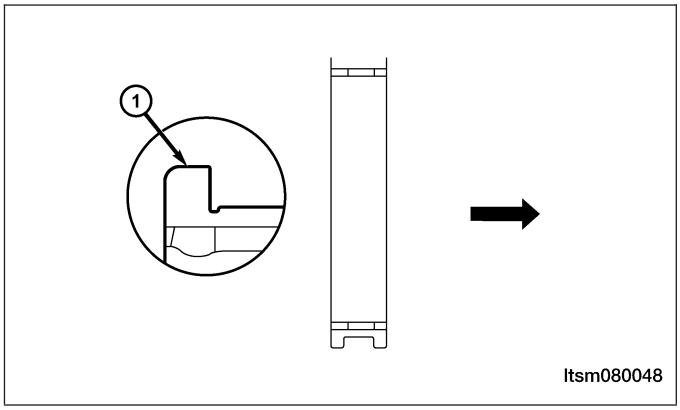

   - Ensure that the two deep tooth spaces of the gear hub (1) are correctly aligned with the two high racks of the gear hub during the installation of gear bushing.

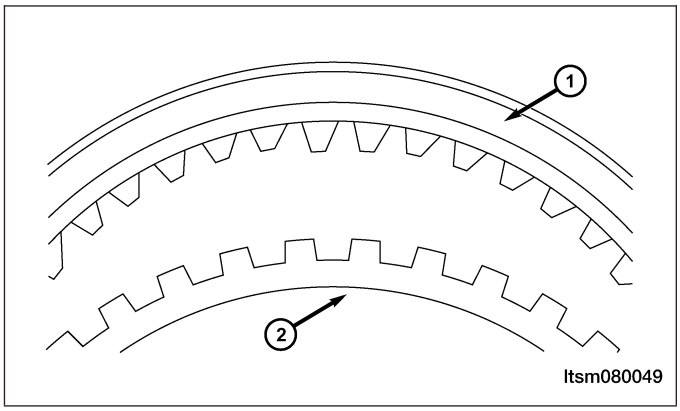

Downloaded from www.Manualslib.com manuals search engine

7. Install the synchronizer Ring.

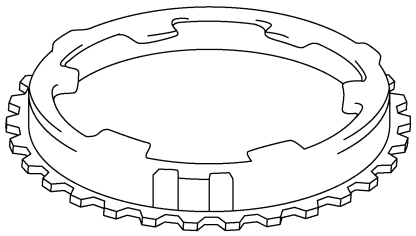

ltsm080073

8. Using special tools MB-998812 (1), MB-998814 (2) and MB-998822 (3), install the sleeve-2nd gear (4).

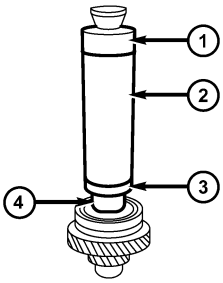

ltsm080074

9. Using special tools MB-998812 (1), MB-998814 (2) and MB-998822 (3), install the 3rd driven gear (4).

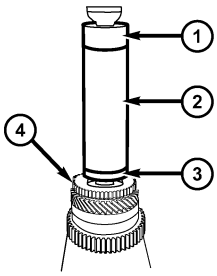

ltsm080075

10. Install the snap ring-3rd driven gear (1). Install the snap ring to maintain the proper axial clearance of the output shaft 3rd driven gear.
(Standard Value: -0.01 mm to 0.09 mm)

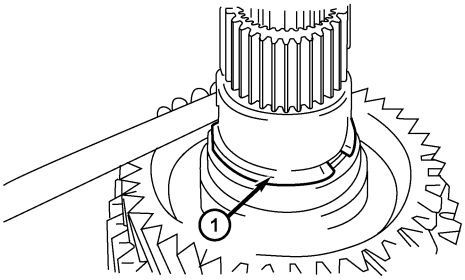

ltsm080076

Downloaded from www.Manualslib.com manuals search engine

11. Using special tools MB-998812 (1), MB-998813 (2) and MB-998819 (3), install the 4th driven gear (4).

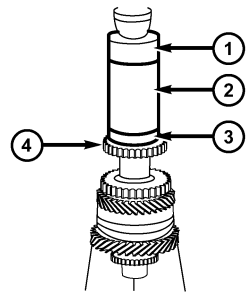

ltsm080077

12. Using special tools MB-998812 (1), MB-998813 (2) and MB-998819 (3), install the sleeve-5th gear (4).

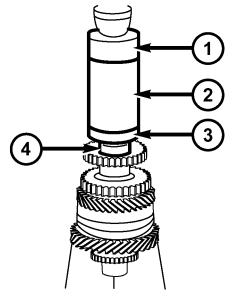

ltsm080078

13. Install the gear hub-5th-reverse gear.
Install the gear hub-5th-reverse gear in the position (1) shown in the figure.

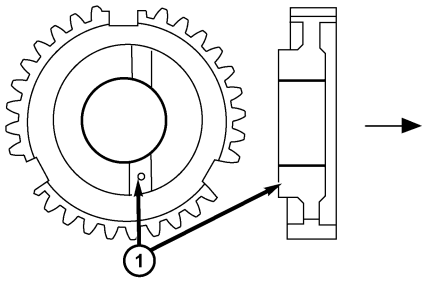

ltsm080079

CAUTION:
Using special tools MD-998812 (1), MD-998813 (2) and MD-998819 (3), install the synchronizer ring (4). Ensure that the synchronizer ring is not locked when installing the gear hub-5th-reverse gear.

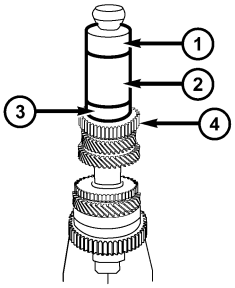

ltsm080080

Downloaded from www.Manualslib.com manuals search engine

14. Using special tools MB-998812 (1) and MB-998818 (2), install the reverse driven gear/needle bearing-reverse gear/sleeve-reverse gear (3).

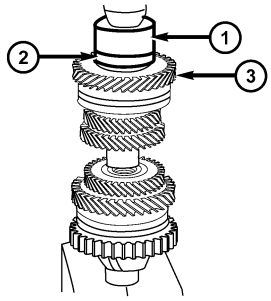

ltsm080081

15. Using special tools MB-9988112 (1) and MB-998818 (2), install the input shaft rear bearing (3).

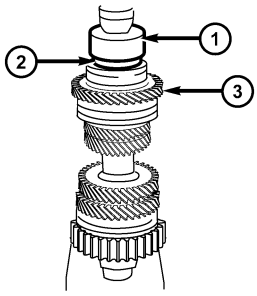

ltsm080082

16. Install the outer ring-1st-2nd gear synchronizer ring/steel ring-1st-2nd gear synchronization ring/inner ring-1st-2nd gear synchronization ring (1).
    - Inspect the conical surface of the clutch gear for any damage or breakage on the gear surface.

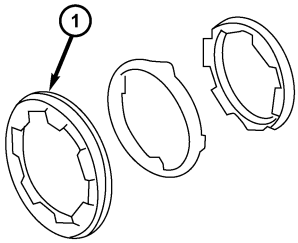

ltsm080083

    - Install the outer ring (2) and inner ring (4), and then press them down to the gear (1) to measure the clearance “A”. If “A” is less than the limit value, the rings (3) should be replaced-.Limit Value: 0.5 mm

CAUTION:
The outer ring, inner ring or steel, are replaced as a complete set.

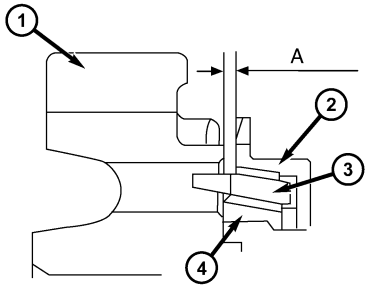

ltsm080084

Downloaded from www.Manualslib.com manuals search engine

17. Install the gear bushing and hub of synchronizer:
    - Assemble the gear bushing together with the gear hub of synchronizer, and then inspect for smooth operation without lockup.
    - Inspect the front/rear of the interior surface of the gear bushing for any damage.
    - Inspect the synchronizer springs for any weak springs or damage.

      CAUTION: The gear bushing or gear hub of the synchronizer are replaced as a complete set.

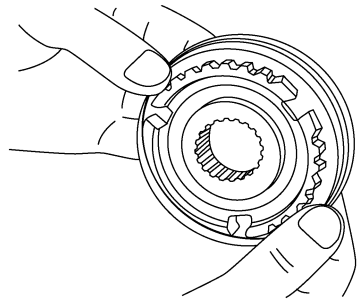

ltsm080059

18. Install the transaxle gear:
    - Inspect the gear surface of the skew gear and clutch gear (1) for any damage.
    - Inspect the conical surface of the synchronizer (2) for thickening, damage or wear.
    - Inspect the internal diameter of the front/rear surface of the gear.

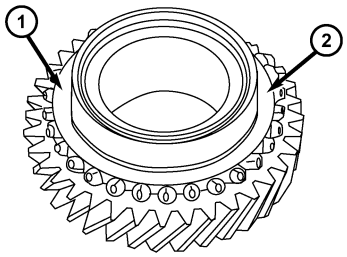

ltsm080085

Downloaded from www.Manualslib.com manuals search engine

Output Gear For Reverse Gear

Disassemble

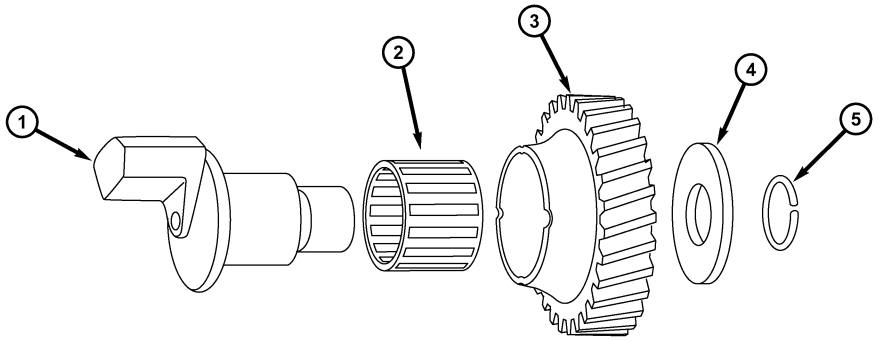

ltsm080086

1 - Idler Gear Shaft	4 - Thrust Plate
2 - Needle Bearing	5 - Thrust Plate Snap Ring
3 - Reverse Gear	

1. Remove the thrust plate snap ring (5)
2. Separate the thrust plate (4) and the reverse gear (3).
3. Separate the needle bearing (2) and idle gear shaft (1).

Inspection

Needle Bearing

- Assemble the shaft together with the gear, and then examine whether they can slide smoothly without sagging or noise.
- Inspect the bearing cage for any damage.

Downloaded from www.Manualslib.com manuals search engine

5th-Reverse Gear Shift Fork

Disassemble

1. Separate the 5th-Reverse shift fork from the shift fork assembly.

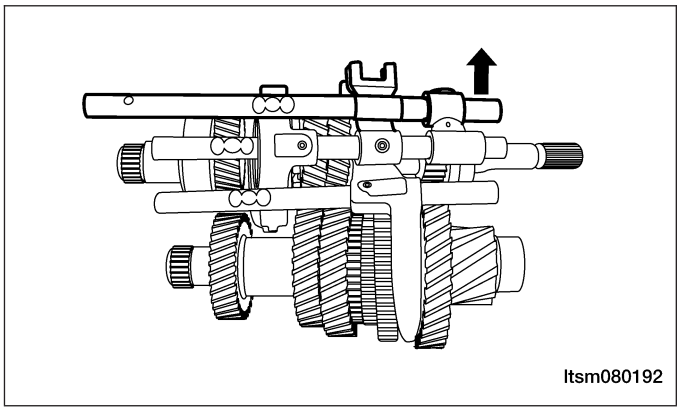

2. Use a suitable tool to remove the shift fork spring pin from the shift fork and the shift fork shaft.

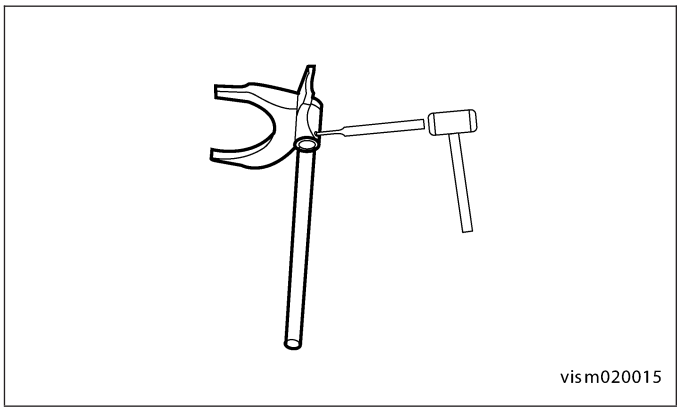

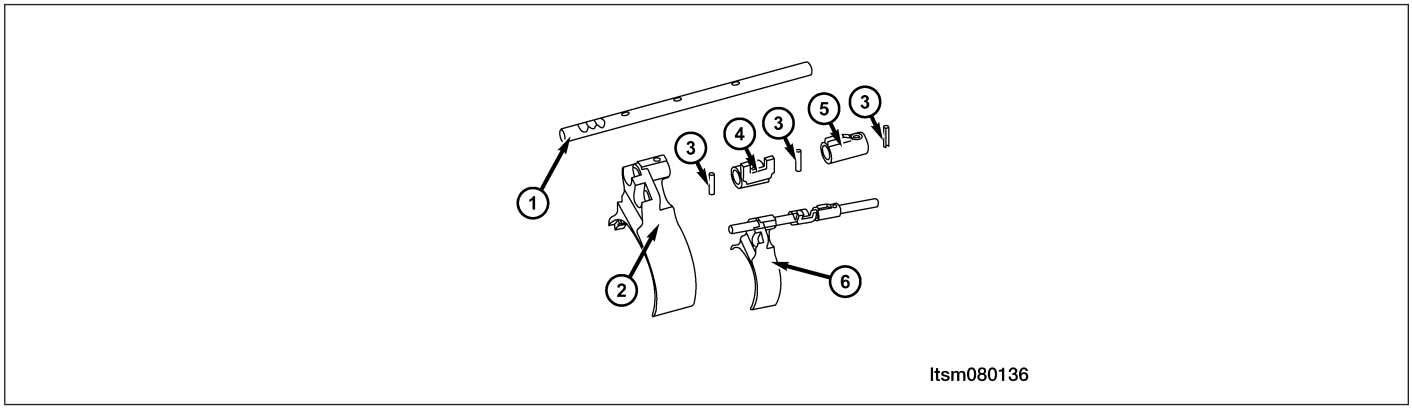

1 - 5th Shift Fork Shaft	4 - Reverse Fork Rack
2 - 5th Shift Fork	5 - Driving Block - Backup Light Switch
3 - Spring Pin for Fork Shaft	6 - 5th-Reverse Shift Fork Shaft Assembly

3. Remove the spring pins (3) from the 5th shift fork shaft (1).
4. Separate the 5th shift fork (2) and the reverse fork rack (4) from the 5th shift fork shaft (1).
5. Separate the backup lamp switch driving block (5) from the 5th shift fork shaft (1).

Downloaded from www.Manualslib.com manuals search engine

Assemble

Assemble in the reverse order of disassembly.

NOTE :

- Check and ensure the shift fork is properly installed to the fork shaft, there should be NO axial or radial motion in the fork shaft.
- Check and ensure the fork rack is properly installed to the fork shaft, there should be NO axial or radial motion in the fork shaft.
- Check and ensure backup light driving block is properly installed to the fork shaft, there should be NO axial or radial motion in the fork shaft.
- Check the fork shaft surface for any damage.
- Check the position of the three spring pins, ensure the pins are in proper alignment. The extension of both ends of the three spring pins should not exceed 3 mm.

3rd-4th Gear Shift Fork

Disassemble

1. Separate the 3rd-4th shift fork from the shift fork assembly.

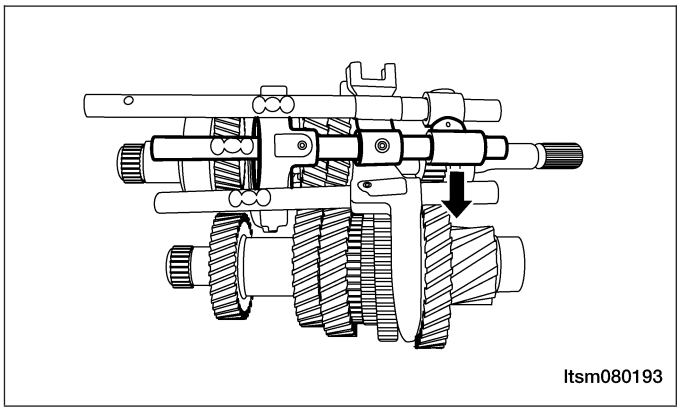

2. Use a suitable tool to remove the shift fork spring pin from the shift fork and the shift fork shaft.

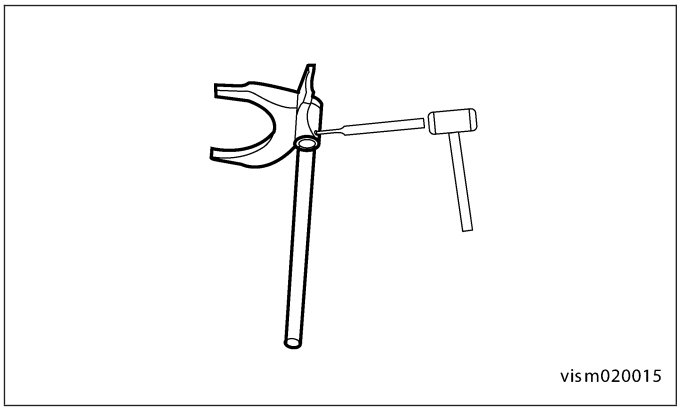

Downloaded from www.Manualslib.com manuals search engine

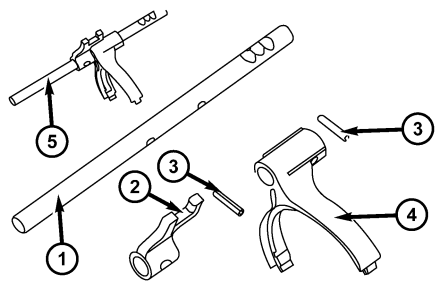

ltsm080137

1 - 3rd-4th Shift Fork Shaft	4 - 3rd-4th Shift Fork
2 - Fork Rack - 3rd-4th Gear Shift Fork	5 - 3rd-4th Shift Fork Shaft Assembly
3 - Spring Pin for Fork Shaft	

3. Remove the spring pins (3) from the 3rd-4th shift fork shaft (1).
4. Separate the 5th shift fork (4) and the fork rack (2) from the 3rd-4th shift fork shaft (1).

Assemble

Assemble in the reverse order of disassembly.

NOTE :

- Check and ensure the shift fork is properly installed to the fork shaft, there should be NO axial or radial motion in the fork shaft.
- Check and ensure the fork rack is properly installed to the fork shaft, there should be NO axial or radial motion in the fork shaft.
- Check the fork shaft surface for any damage.
- Check the position of the three spring pins, ensure the pins are in proper alignment. The extension of both ends of the three spring pins should not exceed 3 mm.

1st-2nd Gear Shift Fork

Disassemble

1. Separate the 1st-2nd shift fork from the shift fork assembly.

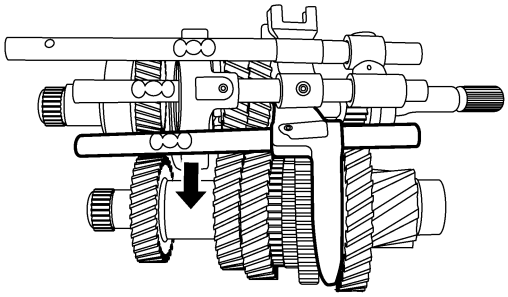

vism020016

Downloaded from www.Manualslib.com manuals search engine

2. Use a suitable tool to remove the shift fork spring pin from the shift fork and the shift fork shaft.

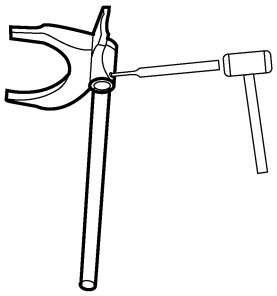

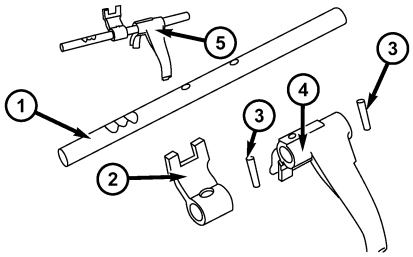

1 - 1st-2nd Shift Fork Shaft	4 - 1st-2nd Shift Fork
2 - Fork Rack - 1st-2nd Gear Shift Fork	5 - 1st-2nd Shift Fork Shaft Assembly
3 - Spring Pin for Fork Shaft	

3. Remove the spring pins (3) from the 1st-2nd shift fork shaft (1).
4. Separate the 1st-2nd shift fork (4) and the fork rack (2) from the 1st-2nd shift fork shaft (1).

Assembly

Assemble in the reverse order of disassembly.

NOTE :

- Check and ensure the shift fork is properly installed to the fork shaft, there should be NO axial or radial motion in the fork shaft.
- Check and ensure the fork rack is properly installed to the fork shaft, there should be NO axial or radial motion in the fork shaft.
- Check the fork shaft surface for any damage.
- Check the position of the three spring pins, ensure the pins are in proper alignment. The extension of both ends of the three spring pins should not exceed 3 mm.

Downloaded from www.Manualslib.com manuals search engine

Transaxle Clutch Housing Assembly

Disassemble

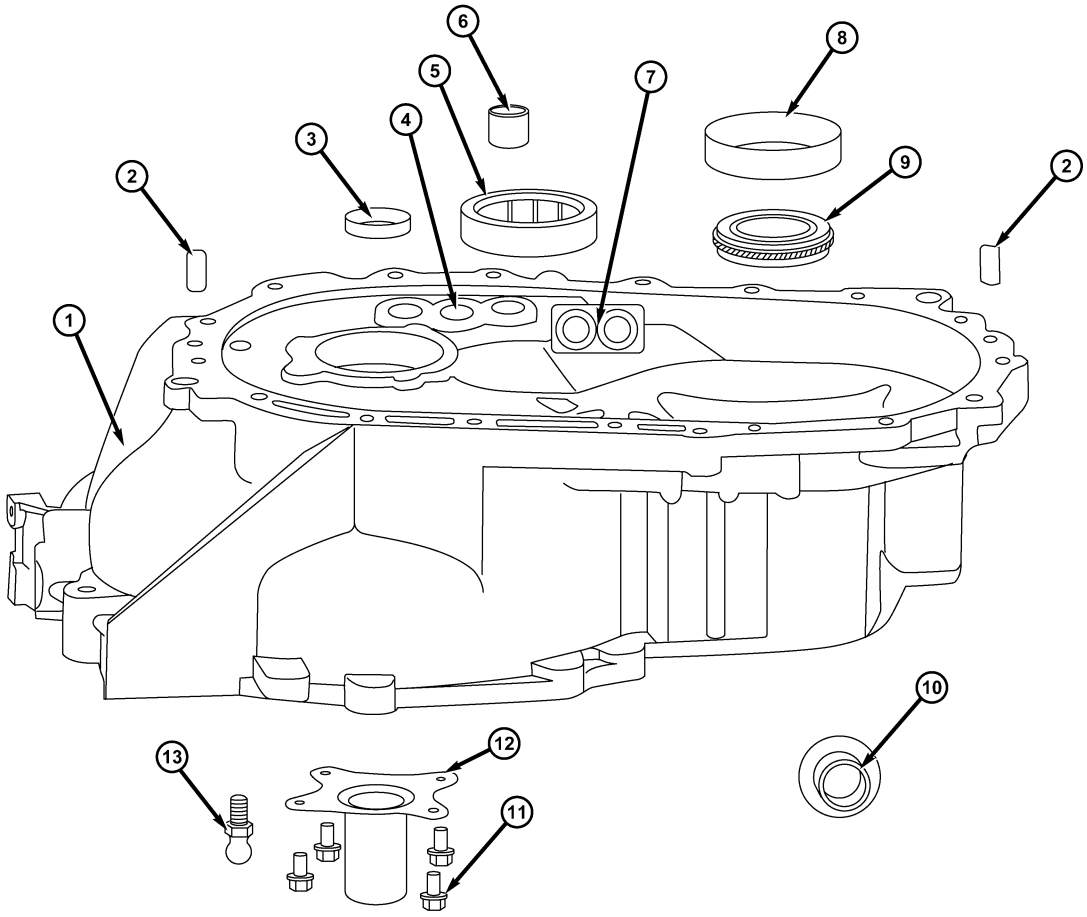

ltsm080095

Downloaded from www.Manualslib.com manuals search engine

1 - Clutch Housing	8 - Front/Rear Bearing Of Differential
2 - Pin GB119 A10×20	9 - Fluid Seal-Differential
3 - Fluid Seal-Input Shaft	10 - Speedometer Banking Cover
4 - Bushing-Gear Shifting Mechanism	11 - Bolt GB5787 M6×12
5 - Output Shaft Front Bearing	12 - Release Bearing Race
6 - Bearing-Gear Shifting Mechanism	13 - Buttonhead-Seat Release Fork
7 - Magnetic Assembly	

NOTE :
The following special tools are required to perform the repair procedure:
- MB-998772 - Valve Spring Compressor
- MB-999566 - Hook
- MB-990938 - Handle
- MB-990935 - Installer Connector
- MB-990934 - Installer Connector
- MB-998325 - Fluid Seal Installer
- MB-990926 - Installer Connector

1. Using special tools MB-999566 (1), MB-996772 (3), and MD-998348 (4), disassemble the outer race of the front/rear bearing (2) of the differential.

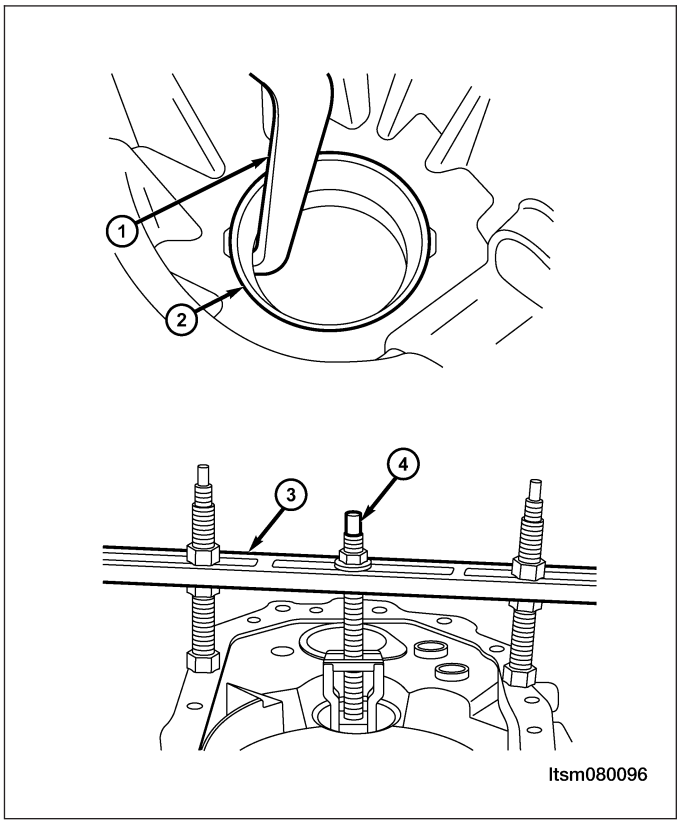

Downloaded from www.Manualslib.com manuals search engine

Assembly

1. Install the bushing.
   Press the bushing (1) into position (2) as shown in the figure.

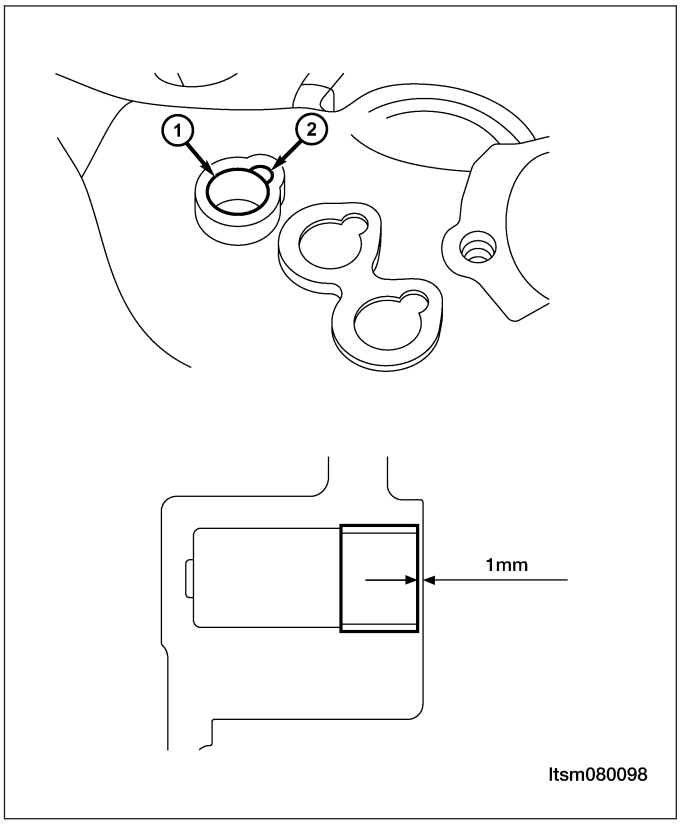

2. Using special tools MB-990938 (2) and MB-990934 (3), install the outer race-output shaft bearing (1). Install the outer race with the stamped side in the position shown in the figure.

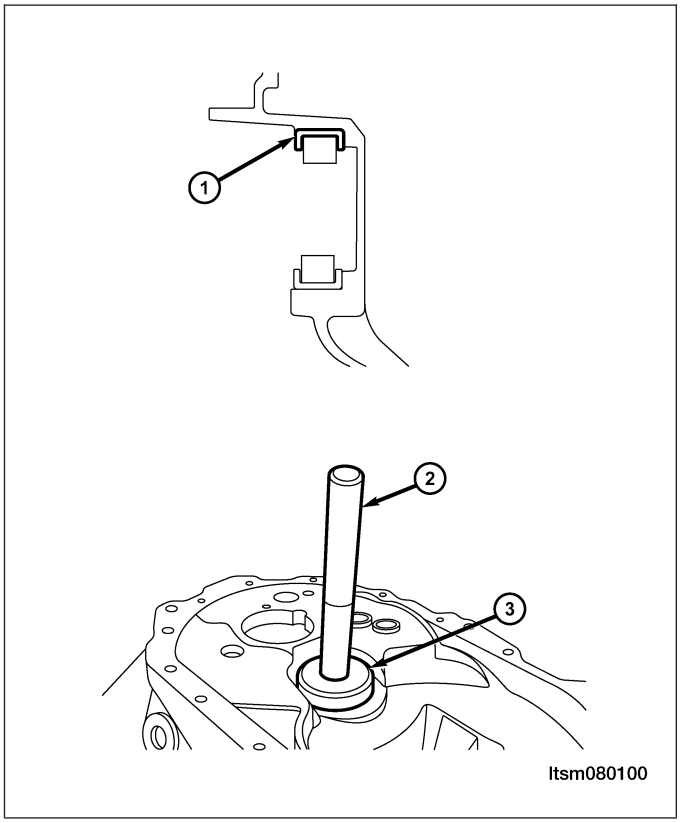

Downloaded from www.Manualslib.com manuals search engine

3. Using special tools MB - 990938 (1), and MB - 990935 (2), install the race-differential bearing.

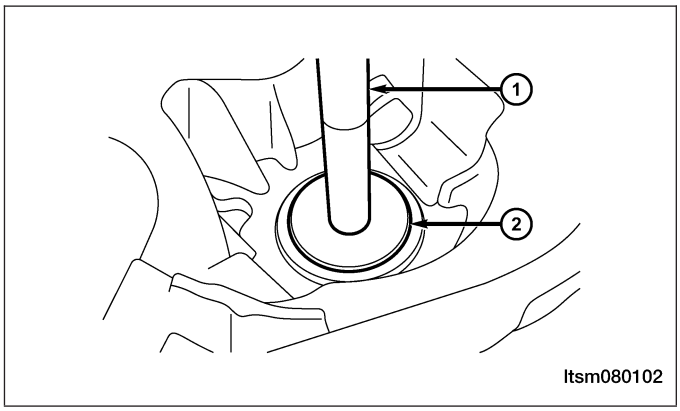

4. Using special tools MB-998325 (1), install the fluid seal-differential.
   Apply transaxle fluid on the fluid seal lip.
   (Specified fluid: 75W-90)

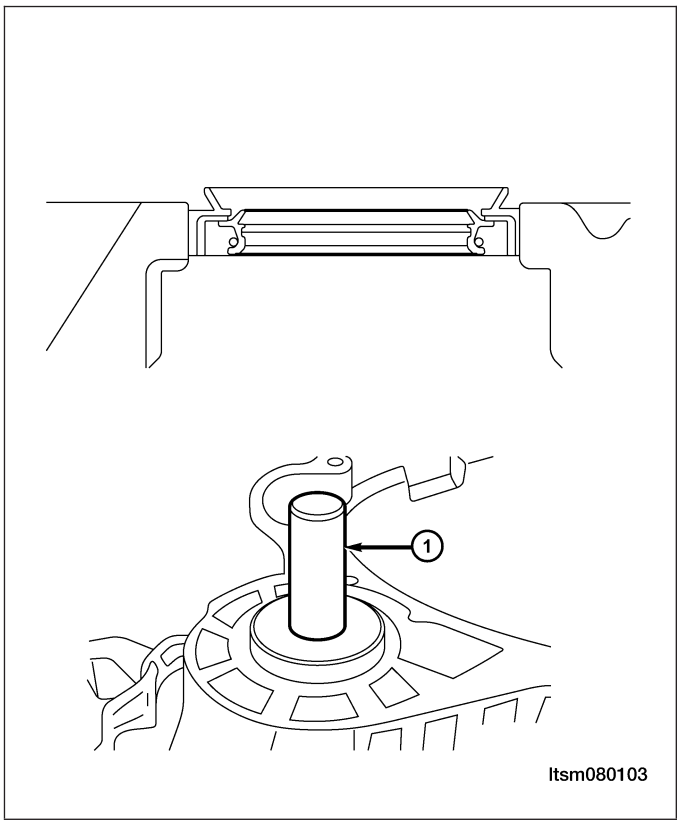

5. Using special tool MB-990938 (1) and MB-990926 (2), install the input shaft fluid seal.
   Apply the lubricating grease on the fluid seal lip.
   (Specified lubricating grease: Mobilux Ep2 or equivalents)

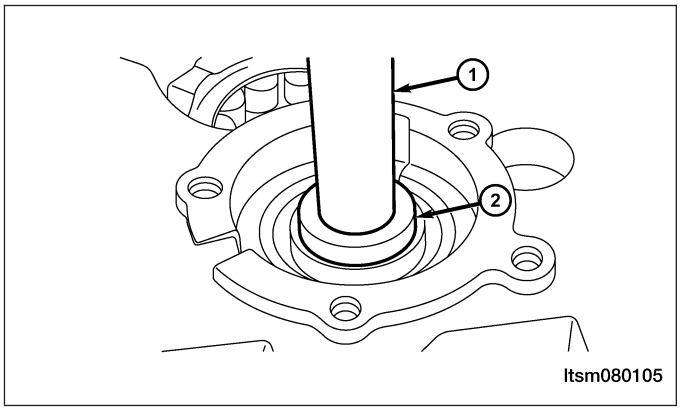

Downloaded from www.Manualslib.com manuals search engine

Transaxle Main Housing Assembly

Assembly

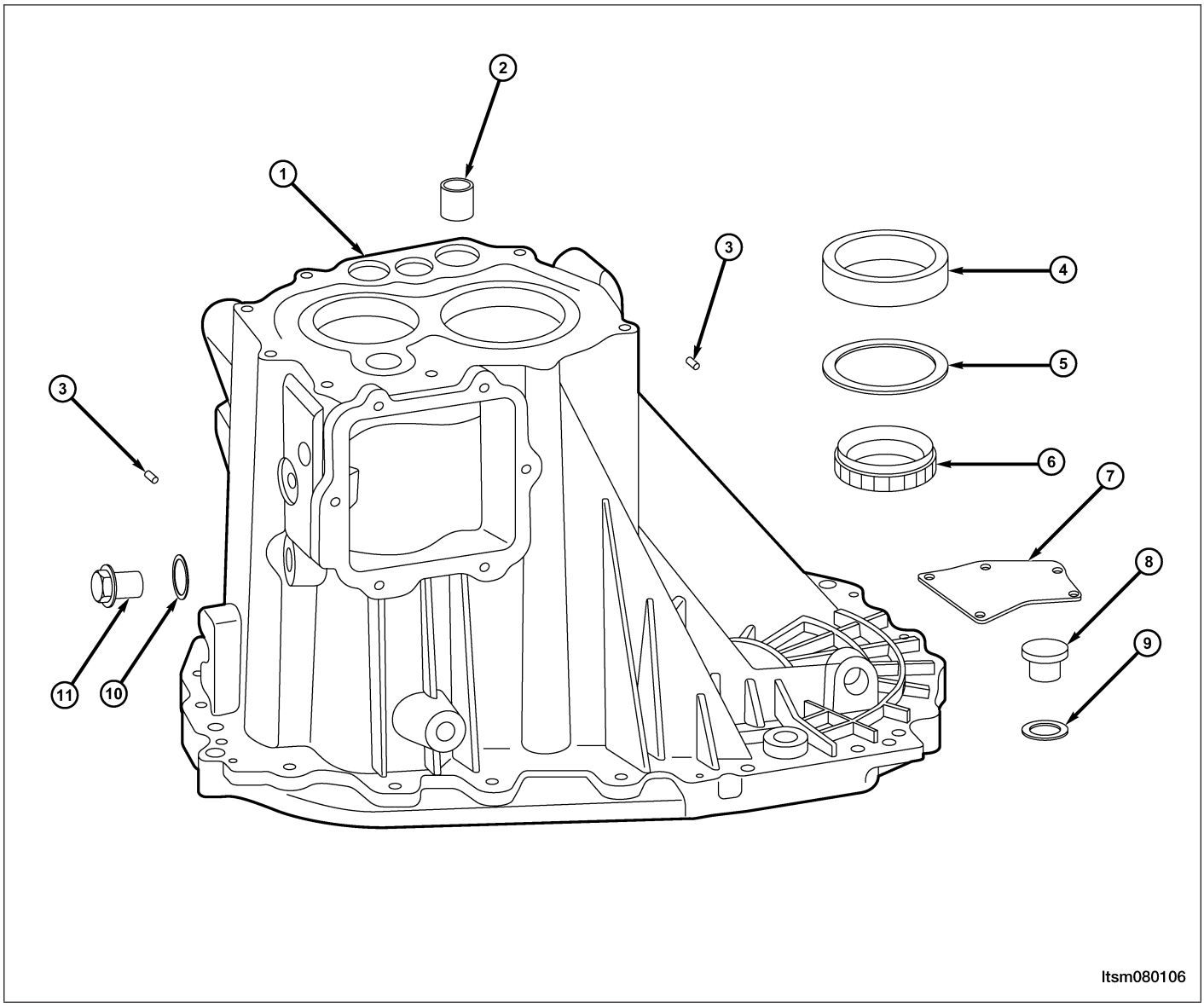

1 - Transaxle Housing	7 - Fluid Baffle
2 - Bearing-Gear Shifting Mechanism	8 - Fluid Draining Screw Plug
3 - Pin GB119	9 - Plain Washer-Fluid Draining Screw Plug
4 - Outer Race Of Front/Rear Bearing Of Differential	10 - Plain Washer-Fluid Limiting Screw Plug
5 - Adjustment Gasket-Differential Rear Bearing	11 - Fluid Limiting Screw Plug
6 - Fluid Seal-Differential	

NOTE :
The following special tools are required to perform the repair procedure:
- MD-998325 - Fluid Installer

Downloaded from www.Manualslib.com manuals search engine

1. Install the bearing-gear shifting mechanism (1).
   Press the bearing in until it is flush with the surface of housing.

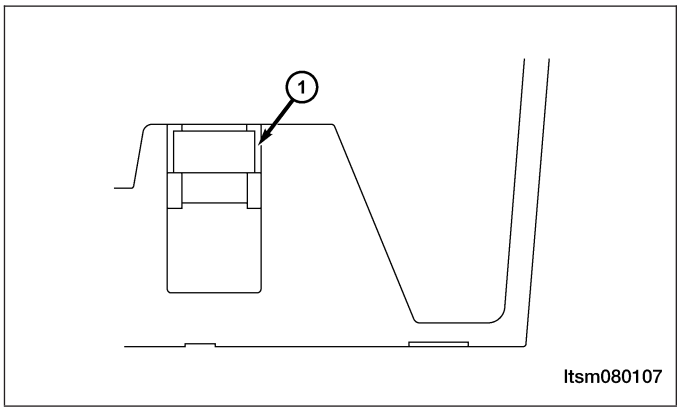

2. Install the differential fluid seal.
   Inspect the fluid seal for damage. Apply lubricating grease on the external diameter and inner lip of the fluid seal, and then use special tool MD-998325 (1) to install the seal into position.
   (Lubricating grease: Mobilux Ep2)

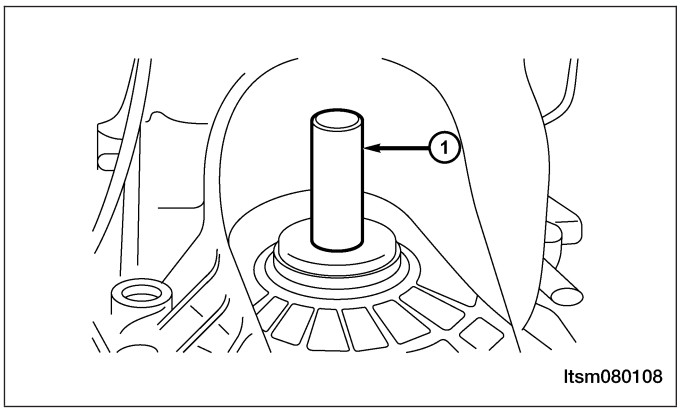

Downloaded from www.Manualslib.com manuals search engine

FRONT DIFFERENTIAL

GENERAL INFORMATION 08-308
- Description 08-308
- Operation 08-310
- Specifications 08-310
- Special Tools 08-310

DIFFERENTIAL UNIT REPAIR 08-312
- **Differential Carrier** 08-312
  - Removal & Installation 08-312
  - Inspection 08-313
  - Assembly 08-313

08

Downloaded from www.Manualslib.com manuals search engine

GENERAL INFORMATION

Description

The differential includes the differential side gears and the shaft mounted differential pinion gears. Direct contact between the gears and the differential case is prevented by the differential side gear thrust washers installed under the gears. The differential pinion shaft is held in position by a differential pinion shaft lock pin that extends through the end of the differential pinion shaft and the differential case.

The differential transaxle assembly consists of the following components:

- Differential case (part of the final drive carrier)
- 2 pinion gears supported by a pinion shaft
- 2 side gears supported by the differential case and half-shafts

Downloaded from www.Manualslib.com manuals search engine

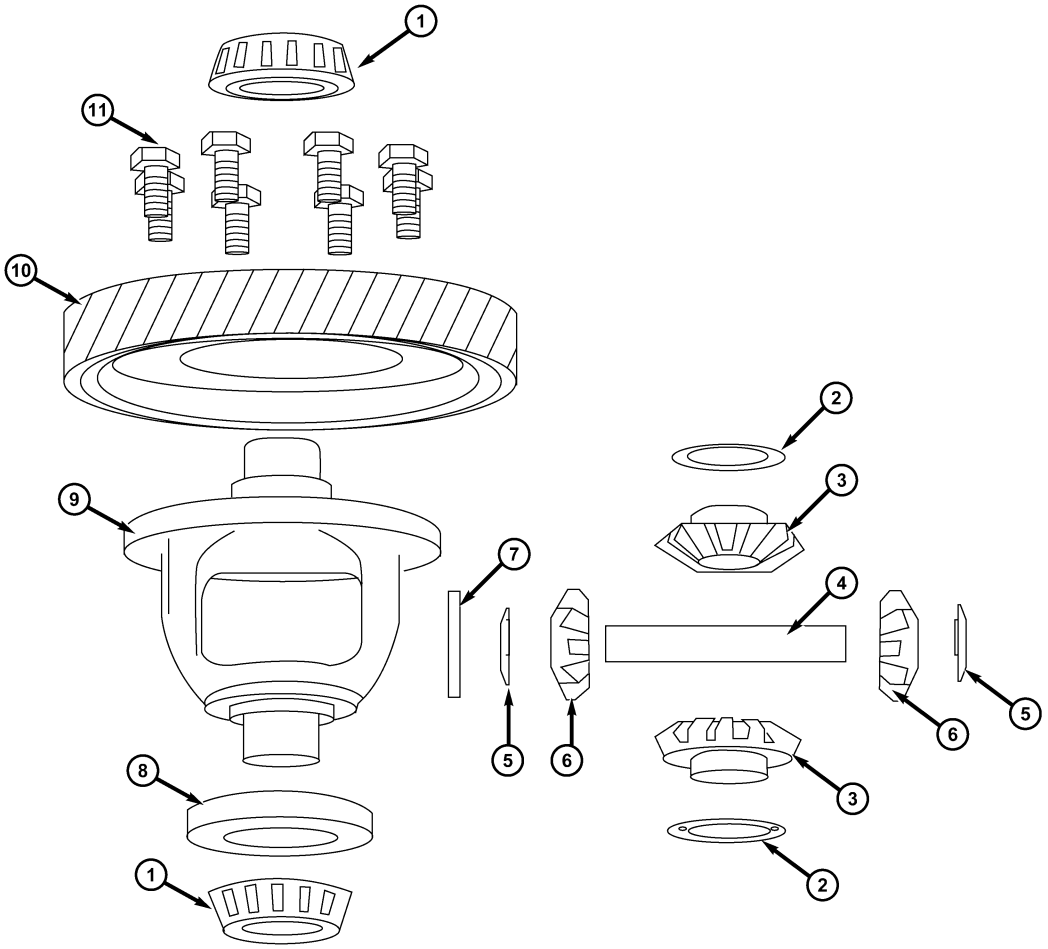

ltsm080109

Downloaded from www.Manualslib.com manuals search engine

1 - Front/Rear Bearing Of Differential	7 - Anchor Pin-Planetary Gear Shaft
2 - Adjustment Gasket-Axle Shaft Gear	8 - The Driving Gear-Speedometer
3 - Axle Shaft Gear	9 - Differential Housing
4 - Planetary Gear Shaft	10 - The Driven Gear Of Main Reducing Gear
5 - Thrust Washer	11 - Bolt-The Driven Gear Of Main Reducing Gear And The Differential Housing
6 - Spherical Washer-Planetary Gear	

Operation

The differential operates through the gear mesh with the ring gear bolted to the differential case. The engine power is transmitted to the axle shafts through the pinion mate and side gears. The side gears are connected to the axle shafts.

Specifications

Clearance Specifications

Clearance Between Side Gear And Planetary Gear	0.028 - 0.150 mm
Adjusting Washer	0.93 - 1.00 mm

Special Tools

Installer Connector (40 mm) MD-998819	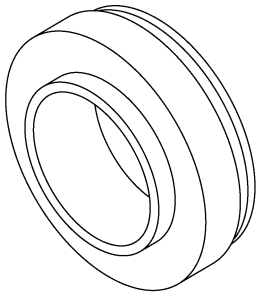 ltsm080013
Installer Cap MD-998812	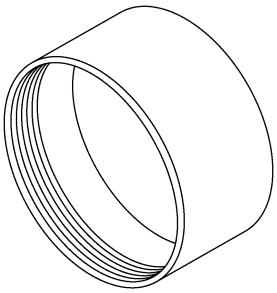 ltsm080007

Downloaded from www.Manualslib.com manuals search engine

Bearing Remover MD-998801	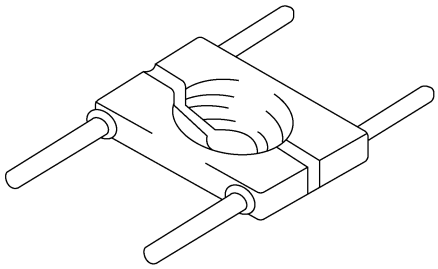 ltsm080006
Fluid Installer MD-998325	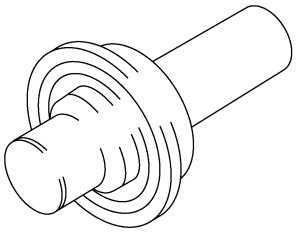 ltsm080004

Downloaded from www.Manualslib.com manuals search engine

DIFFERENTIAL UNIT REPAIR

Differential Carrier

Removal & Installation

NOTE :
The following special tools are required to perform the repair procedure:
- MD-998801 - Bearing Remover

1. Remove the transaxle input shaft assembly, transaxle output shaft assembly, 1st-2nd shift fork, 3rd-4th shift fork and 5th-reverse fork shaft together as a unit (See Transaxle Assembly Unit Repair in Section 08 Transaxle).
2. Remove the transaxle differential assembly.
3. Mount the differential in a vice.
4. Remove the drive gear bolts (1).

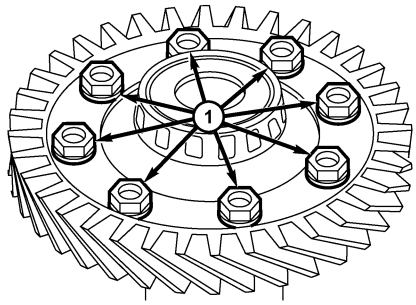

ltsm080117

5. Using special tool MD-998801 (1), disassemble the differential-front/rear shaft bearing.

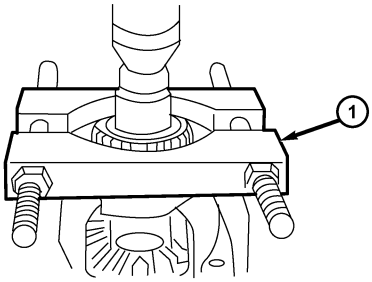

ltsm080110

6. Tap the drive gear off the differential case assembly using a suitable tool.
7. Remove the pinion mate shaft use a suitable tool.

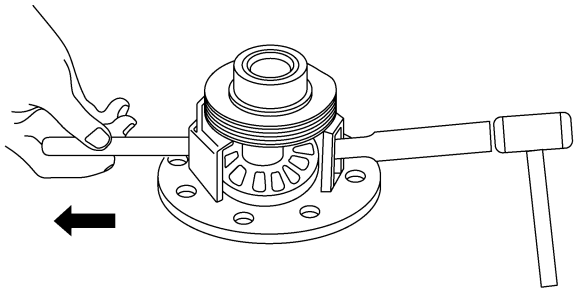
ltsm080112

Downloaded from www.Manualslib.com manuals search engine

8. Turn the pinion mate gear, then remove the pinion mate gear, pinion mate thrust washer, side gear and side gear thrust washer from the differential case.

Inspection

1. Clean all components.
2. Inspect the following components for wear:
   - Ring gear
   - Adjusting washers
   - Side gears
   - Spherical washers
   - Planetary gears
   - Planetary gear shaft

Assembly

1. Install the adjustment shim-axle shaft gear/axle shaft gear/spherical washer-planetary gear/planetary gear/planetary gear shaft.
2. Assemble the spherical washer on the back of axle shaft gear, and then install the axle shaft gear on the differential.

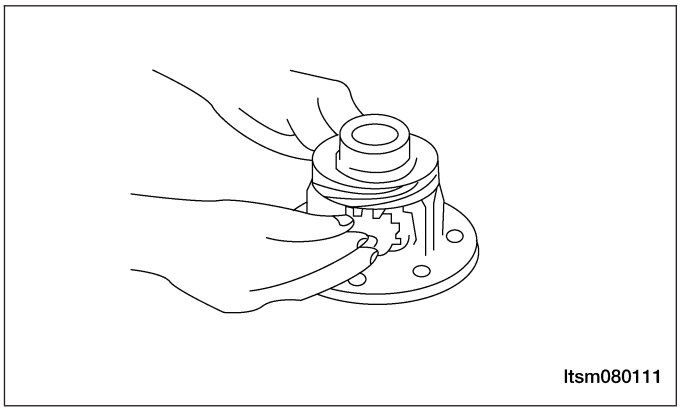

NOTE :
The adjustment shim with intermediate thickness (0.93 to 1.00 mm) shall be assembled when a new axle shaft gear is installed.

3. Place the spherical washer on the back of any planetary gear to make two planetary gears engage simultaneously with the axle shaft gear. Turn these gears, and at the same time, install them in their proper positions.
4. Insert and install the planetary gear shaft.
5. Measure the gear clearance between the axle shaft gear and the planetary gear.
   (Standard value: 0.08 to 0.15 mm)
6. If the measured gear clearance doesn't conform to the standard value, select and install the adjustment shim, and then measure the gear clearance again.

NOTE :
Adjust the gear clearance until the gear clearance of both sides is the same as each other.

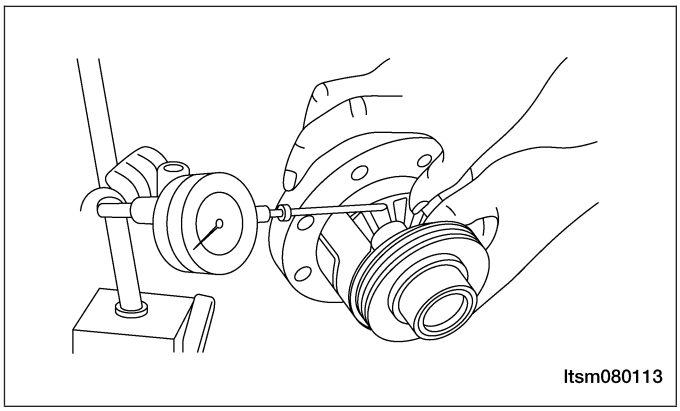

Downloaded from www.Manualslib.com manuals search engine

7. Install the lock pin (2).
8. Install the lock pin in the position shown in the figure.

CAUTION:
After the lock pin is taped in, the axle shaft gear and the planetary gear should operate normally.

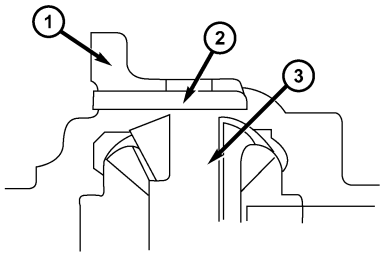

ltsm080114

1 - Differential Housing
2 - Lock Pin
3 - Pinion Shaft

9. Using special tools MD-998812 (1) and MB-998819 (2), install the differential front/rear bearing (3).

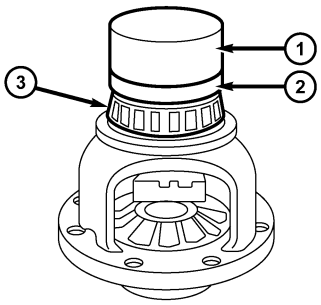

ltsm080115

10. Install the driven gear of main reducing gear.
11. Apply thread sealant to the threads of all bolts.

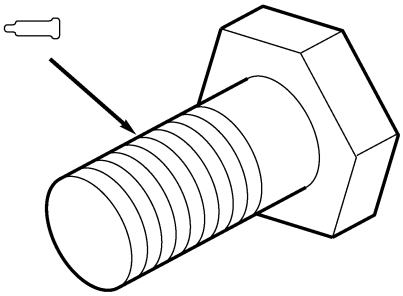
ltsm080116

Downloaded from www.Manualslib.com manuals search engine

12. Tighten the ring gear bolts (1) in the sequence shown in the figure.
    (Tighten: Ring gear bolts to 132 N·m)

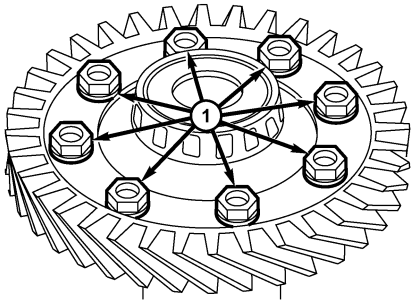

ltsm080117

Downloaded from www.Manualslib.com manuals search engine

CLUTCH SYSTEM

GENERAL INFORMATION 08-317
- Description 08-317
- Operation 08-317
- Specifications 08-317
- Special Tools 08-318

CLUTCH ASSEMBLY SERVICE 08-319

Clutch and Pressure Plate 08-319
- Removal & Installation 08-319
- Clutch Pedal Height 08-321
- Clutch Pedal Free Travel 08-321

Clutch Master Cylinder 08-322
- Description 08-322
- Operation 08-322
- Removal & Installation 08-322

Clutch Slave Cylinder 08-324
- Removal & Installation 08-324

Bleeding Hydraulic Clutch 08-325
- Operation 08-325

Downloaded from www.Manualslib.com manuals search engine

GENERAL INFORMATION

Description

The hydraulic clutch system consists of a clutch master cylinder (2), slave cylinder (3), and an interconnecting hydraulic fluid line. Hydraulic fluid is supplied by the clutch system from the clutch master cylinder reservoir (1).

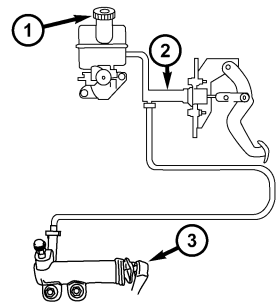

ltsm080194

Operation

The hydraulic clutch system is responsible for engaging and disengaging the clutch. Depressing the clutch pedal develops fluid pressure in the clutch master cylinder. This pressure is transmitted to the integral release bearing which is in contact with the pressure plate diaphragm spring. As additional force is applied, the bearing depresses the diaphragm spring fingers inward on the fulcrums. The action moves the pressure plate rearward, relieving clamping force on the clutch disc.

Specifications

Torque Specifications

DESCRIPTION	TORQUE (N·m)
Transaxle Mounting Bolts	6.9
Clutch Housing Mounting Bolts	44
Clutch Release Bearing Seat Retainer Mounting Bolts	9.8
Gear Shift Mechanism Assembly Mounting Bolts	18
Shift Gear Control Cable Bracket Mounting Bolts	18
Speedometer Gear Mounting Bolts	3.9
Final Drive Driven Gear Mounting Bolts	132
Back Up Lamp Switch	32
Idler Gear Assembly Mounting Bolt	48
Clutch Slave Cylinder Mounting Bolts	11 ± 1

Downloaded from www.Manualslib.com manuals search engine

Special Tools

Flywheel Fixture 09924 - 17810	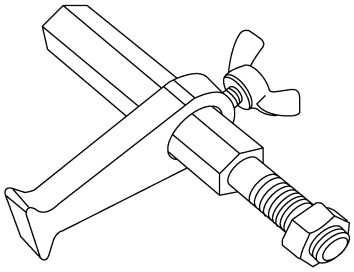 ltsm020211
Bearing Extractor 09917 - 58010	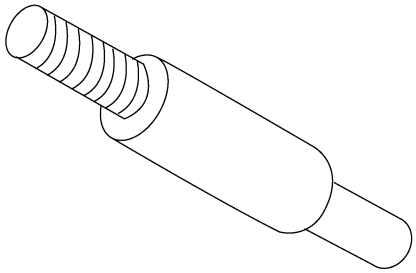 ltsm020212
Input Shaft Bearing Mounting Device 09925 -98210	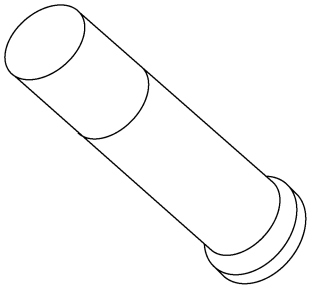 ltsm020213
Clutch Pressure Plate Installer CH-20014	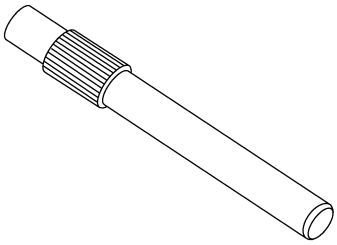 besm080041

Downloaded from www.Manualslib.com manuals search engine

CLUTCH ASSEMBLY SERVICE

Clutch and Pressure Plate

Removal & Installation

1. Remove the transaxle assembly (See Transaxle Assembly Removal & Installation in Section 08 Transaxle).
2. Remove the clutch pressure plate bolts (1).
   (Tighten: Clutch pressure plate bolts to 25 N·m)
3. Remove the modular clutch assembly.

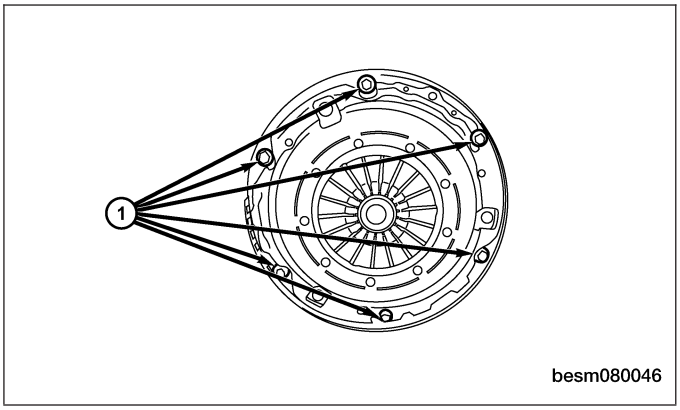

4. Using special tool CH-20043 (1), hold the flywheel.

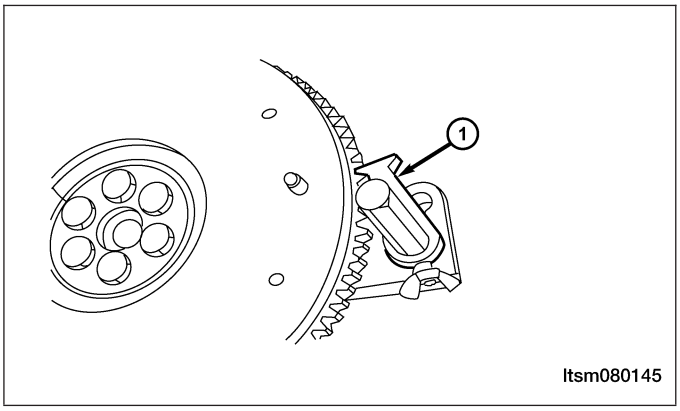

5. Remove the flywheel-to-crankshaft bolts (1) and remove flywheel assembly (if necessary for resurfacing).
   (Tighten: Flywheel-to-crankshaft bolts to 75 N·m)

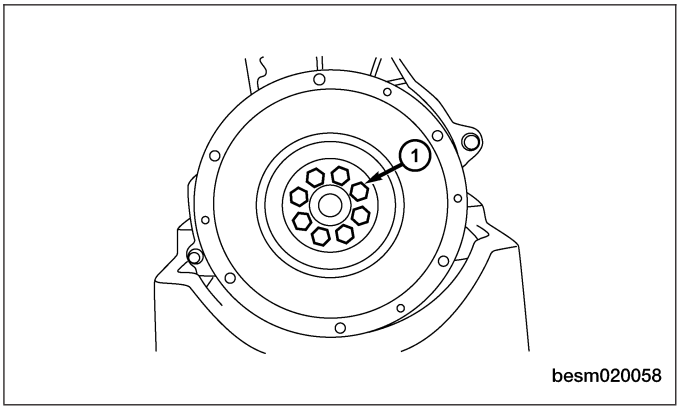

Downloaded from www.Manualslib.com manuals search engine

6. Remove the input shaft bearing using special tool 09917-58010 (1) and spanner, as shown in the figure.

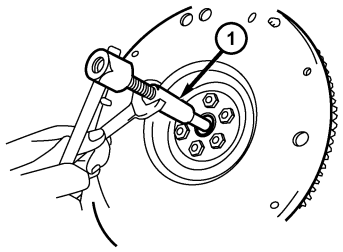

ltsm080146

Inspect

- Check the input shaft bearing to ensure it is able to rotate freely, replace the bearing if necessary.
- Measure the depth of the recesses of the clutch friction lining rivet head, i.e., the distance between rivet head and friction lining surface (as shown in the figure).
  If the depth of any hole comes to the limit, replace friction lining assembly.
  - Standard: 1.2 mm
  - Limit: 0.5 mm

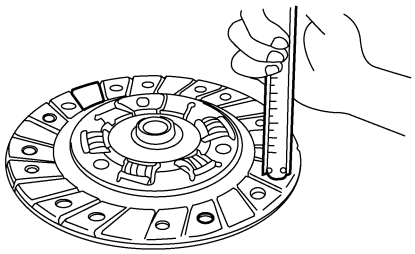
ltsm080147

- Check clutch pressure plate diaphragm spring for irregular wear or damage.
- Check clutch pressure plate for wear or hot spots.
- If found abnormal, replace the clutch plate assembly. Never separate the clutch plate assembly into the diaphragm spring and clutch plate.
- Check the contact surface of the flywheel and friction lining for irregular wear or hot spots. Repair or replace if necessary.

Installation

- Prior to assembling, check the flywheel surface and clutch plate surface to ensure they are clean and dry.
- Using special tools CH-30028 (1), install the input shaft bearing to the crankshaft (as shown in the figure). Align the clutch friction lining assembly and flywheel center using special tools (as shown in the figure), and then install the clutch plate assembly and bolts, Tighten the bolts to the specified torque. (Tighten: Clutch pressure plate bolts to 25 N·m)

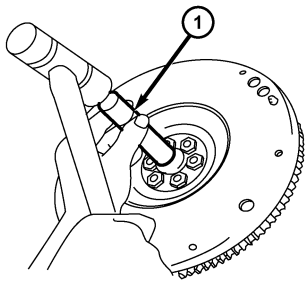

ltsm080148

Downloaded from www.Manualslib.com manuals search engine

NOTE :
When tightening the clutch pressure plate bolts (1), tighten by hand until the friction lining assembly is properly aligned.

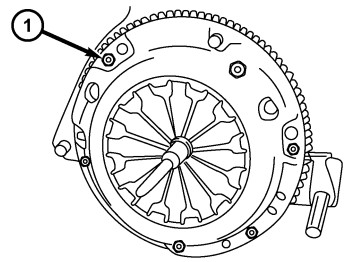

ltsm080149

- Apply a thin layer of grease to the input shaft, and then assemble the transaxle and engine.

  NOTE: Turn the splines when installing the transaxle input shaft into the clutch friction lining assembly until the splines are engaged.

Clutch Pedal Height

Adjust the clutch pedal height using the adjusting bolts (1) on the pedal bracket (3) in accordance with the following requirements. When the clutch pedal (4) is approximately 8 mm higher than the brake pedal (5), the clutch pedal height is normal.

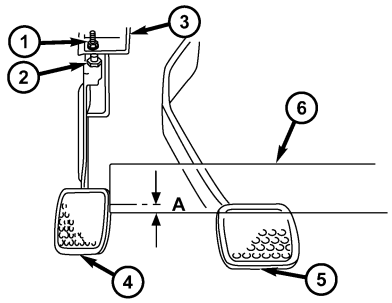

ltsm080150

Clutch Pedal Free Travel

Depress the clutch pedal (1) until the clutch resistance can be felt. Stop accordingly and measure the distance (clutch pedal free travel A). The free travel should be within 15 - 25 mm.

After checking clutch pedal free travel, check the clutch to ensure it is in normal working condition while the engine is running.

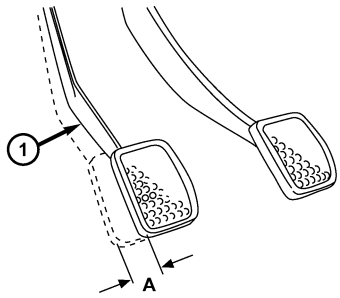

ltsm080151

Downloaded from www.Manualslib.com manuals search engine

Clutch Master Cylinder

Description

The clutch master cylinder mounts to the clutch pedal and consists of a piston and cylinder housing, an actuating push rod, and an interconnecting hydraulic line. Fluid is supplied to the clutch master cylinder via the brake fluid reservoir.

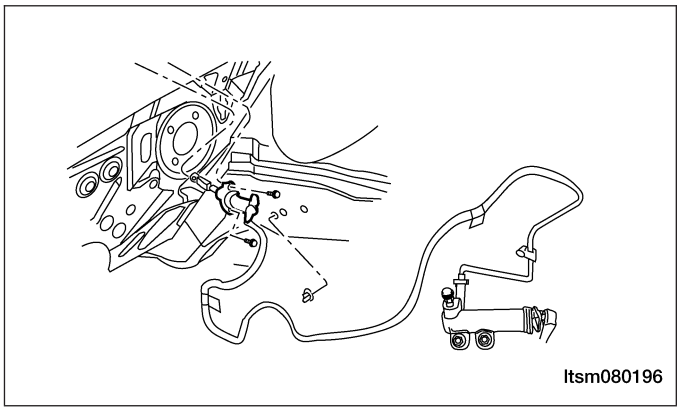

Operation

When the clutch pedal is depressed, the push rod moves the piston in the master cylinder, displacing fluid through the hydraulic line and into the release bearing. The release bearing is extended and forces the fingers of the clutch diaphragm springs to move. As the fingers move, they release the clamping pressure on the clutch disc between the clutch pressure plate and the flywheel. The clutch becomes disengaged as this pressure is released. When the clutch pedal is released, the system hydraulic pressure is released. This allows the force of the clutch diaphragm springs to return themselves to their original position, re-clamping the clutch disc between the flywheel and the clutch pressure plate. Also, the release bearing is forced to return, which reverses the movement of the hydraulic system and returns the pedal to its original position against the up stop.

Removal & Installation

1. Disconnect hydraulic supply line to clutch master cylinder (1) to completely drain clutch master cylinder and tubing.

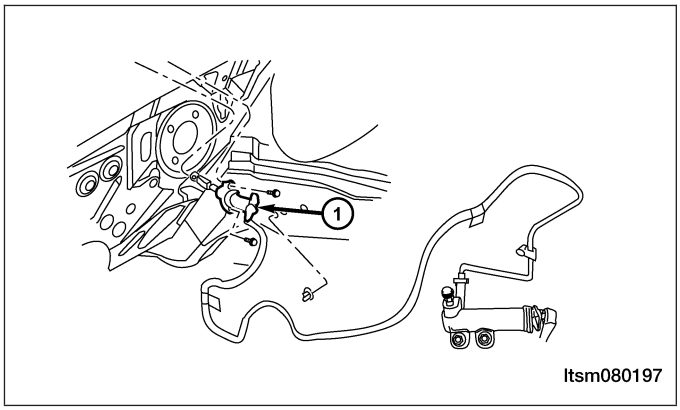

2. Disconnect hydraulic line (1) and drain fluid into suitable container.

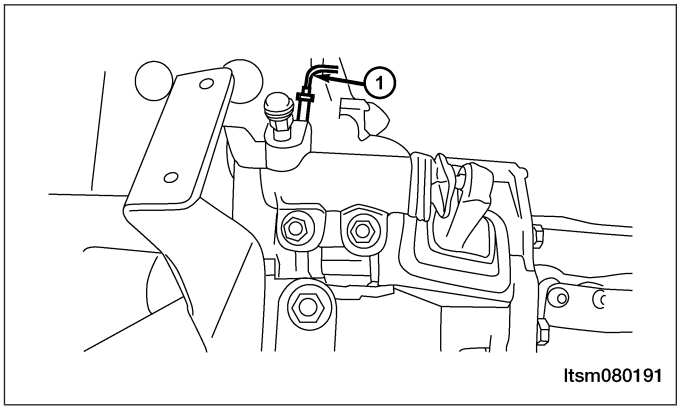

Downloaded from www.Manualslib.com manuals search engine

3. Remove instrument panel lower trim panel (1) (See Instrument Panel Removal & Installation in Section 15 Body & Accessories).

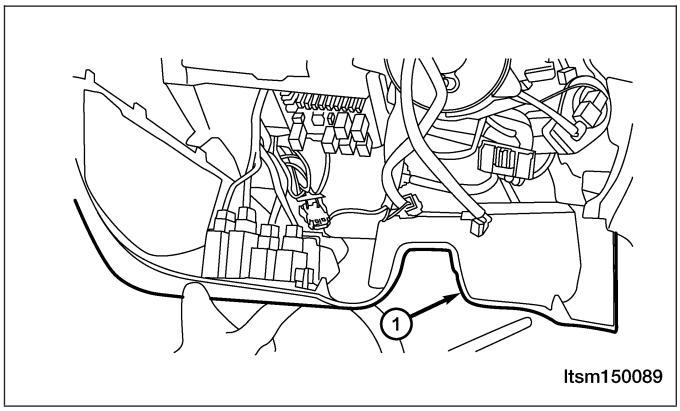

4. Disconnect clutch master cylinder push-rod (1) from clutch pedal.

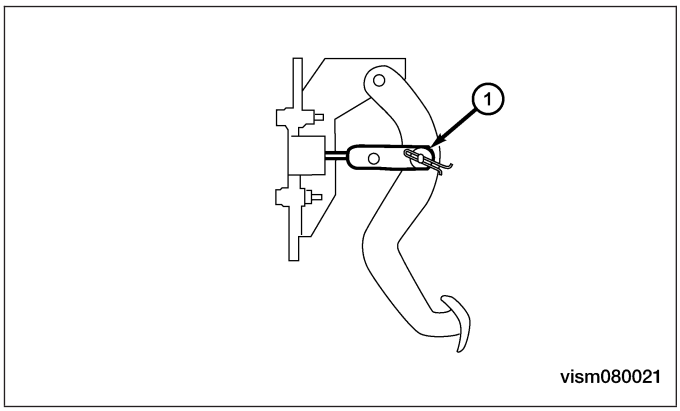

5. Remove hydraulic line from rail retainer.
6. Release master cylinder by rotating to disengage from pedal bracket assembly.

CAUTION:
Use care when removing clutch master cylinder from engine compartment. Aggressive handling can result in a damaged hydraulic line and improper clutch release operation upon reassembly.

CAUTION:
Brake fluid will damage painted surfaces. If brake fluid is spilled on any painted surfaces, wash it off immediately with water.

7. Remove the master cylinder assembly (1) from the mounting position and carefully maneuver the hydraulic pipe from the engine compartment.

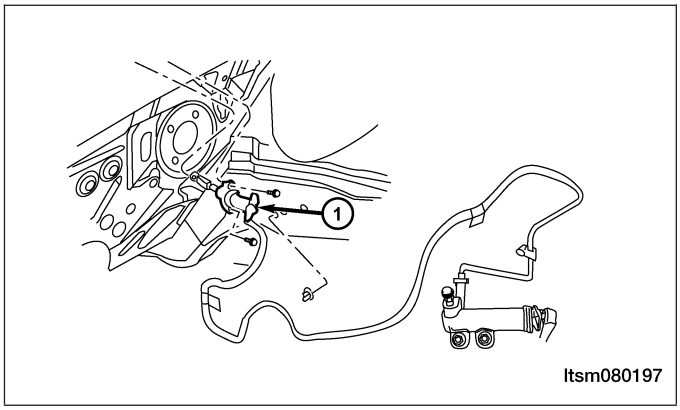

8. Installation is in the reverse order of removal.

Downloaded from www.Manualslib.com manuals search engine

Clutch Slave Cylinder

Removal & Installation

NOTE :
After replacing the slave cylinder, it is necessary to make sure brake master cylinder fluid level is full and the reservoir cap is installed tightly.

1. Remove the clutch master cylinder outlet pipe (1) from the clutch slave cylinder.
   (Tighten: Outlet pipe bolt to 17 ± 1 N·m)

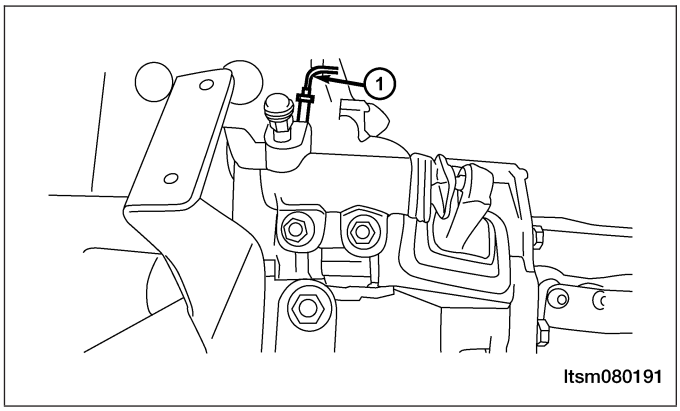

2. Remove the clutch slave cylinder bolts (1) from the transaxle housing.
   (Tighten: Clutch slave cylinder bolts to 11 ± 1 N·m)

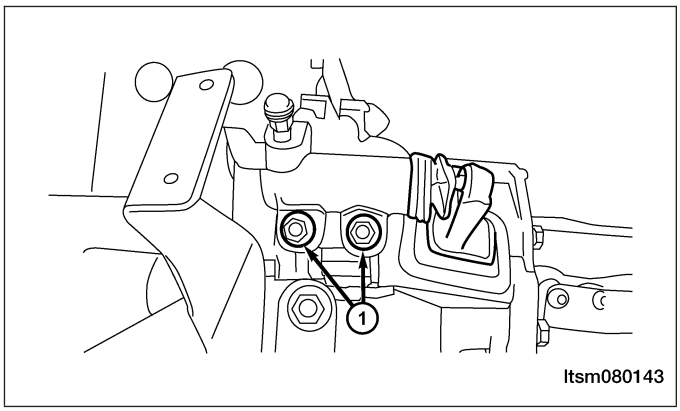

3. Installation is in the reverse order of removal.
4. Bleed the hydraulic clutch (See Bleeding Hydraulic Clutch in Section 08 Transaxle).
   NOTE: Check pipes for leakage of brake fluid.

Downloaded from www.Manualslib.com manuals search engine

Bleeding Hydraulic Clutch

Operation

1. Verify fluid level in brake master cylinder. Top off with DOT 4 brake fluid as necessary. Leave cap off.

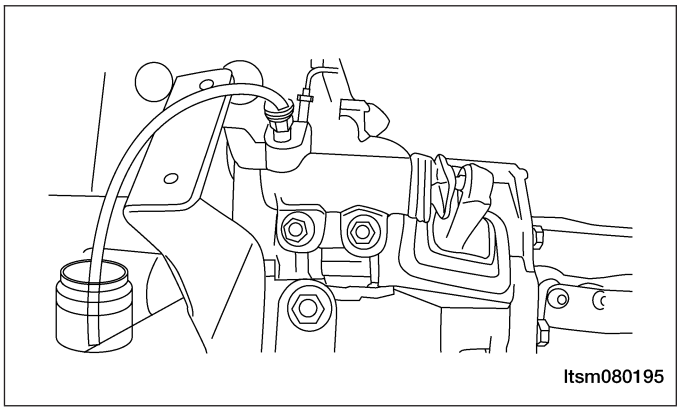

2. Raise the vehicle on hoist.
3. Remove the bleed port protective cap and install a suitable size and length of clear hose to monitor and divert fluid into a suitable container.
4. Loosen the bleed port (1).

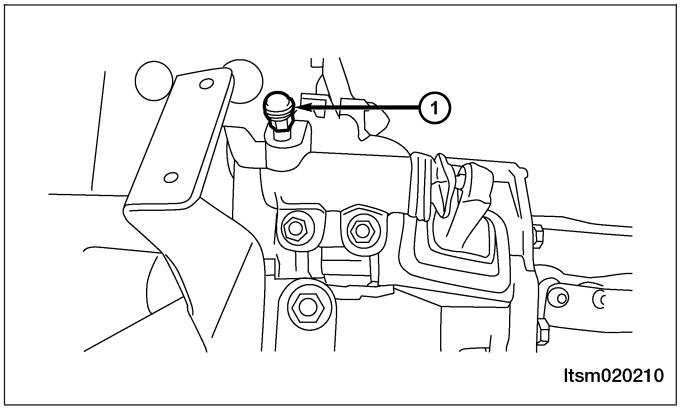

5. Actuate the clutch pedal until the brake master cylinder fluid drains from the bleed port.
6. Depress the clutch pedal, tighten the bleed port.
7. From driver's seat, actuate the clutch pedal until the hydraulic clutch system has pressure.
8. Depress the clutch pedal, loosen the bleed port and bleed the brake master cylinder fluid.
9. Repeat steps 6 to 8 several times until there is no air in the hydraulic clutch system.

NOTE :
Do not allow clutch master cylinder to run dry while fluid exits bleed port.

10. Close the hydraulic bleed port, remove the drain hose and replace the dust cap on the bleed port.
11. Top off the brake master cylinder fluid level with DOT 4 brake fluid as necessary.

CAUTION:
During the bleeding process, make sure the brake master cylinder fluid is always full.

Downloaded from www.Manualslib.com manuals search engine

TRANSFER CASE (4X4)

GENERAL INFORMATION 08-327
Description 08-327
Operation 08-327

ON-VEHICLE SERVICE 08-328

Transfer Case 08-328
Removal & Installation 08-328

TRANSFER CASE UNIT REPAIR 08-329

Transfer Case 08-329
Disassembly 08-329
Assembly 08-331

Downloaded from www.Manualslib.com manuals search engine

GENERAL INFORMATION

Description

Transfer case is attached to the transaxle housing.

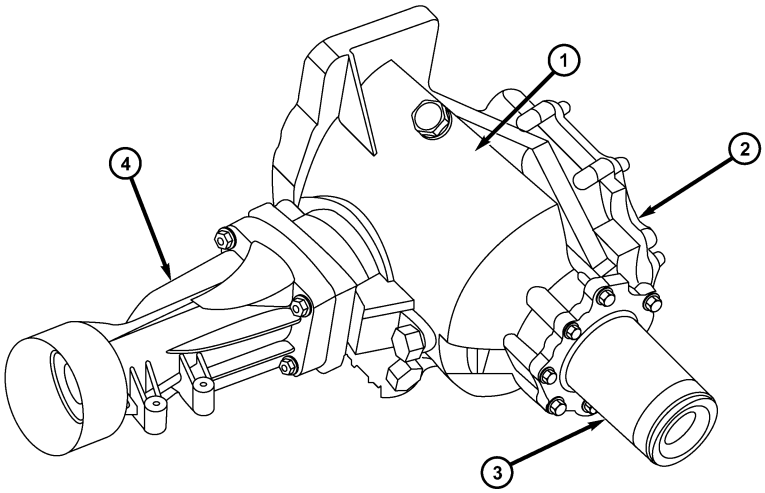

ltsm160007

1 - Transaxle Housing	3 - Axle Shaft Guide
2 - Rear Transaxle Cover	4 - Front Different Housing

Operation

The transfer case transfers the torque output from the transaxle to the ITM controller.

Downloaded from www.Manualslib.com manuals search engine

ON-VEHICLE SERVICE

Transfer Case

Removal & Installation

1. Drain the gear fluid from the transfer case.
   - Fluid-filling plug (1)
   - Fluid-limiting plug (2)
   - Fluid-drain plug (3)

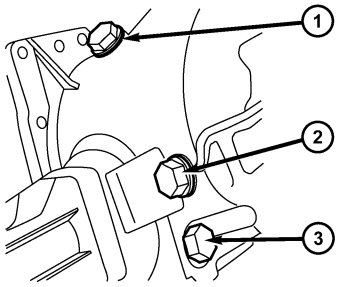

ltsm160011

2. Remove the front intermediate drive shaft assembly.
3. Remove the sub-frame assembly.
4. Remove the left and right front axle shaft mounting bolts (1).

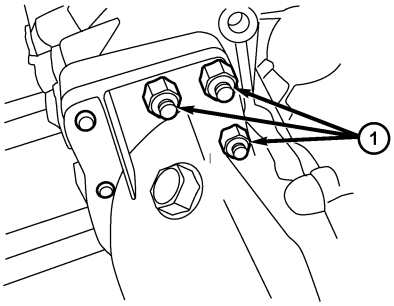

ltsm160012

5. Remove the transaxle and transfer case assembly (See Transaxle Assembly Removal & Installation in Section 08 Transaxle).
6. Remove the transfer case from the transaxle (8 bolts). (Tighten: Transaxle and transfer case bolts to 80 N·m)
7. Installation is in the reverse order of removal.

Downloaded from www.Manualslib.com manuals search engine

TRANSFER CASE UNIT REPAIR

Transfer Case

Disassembly

1. Remove the front housing. Loosen 9 bolts (1) of the housing, then remove the housing.
   (Tighten: Transfer case front housing bolts to 35 N·m)

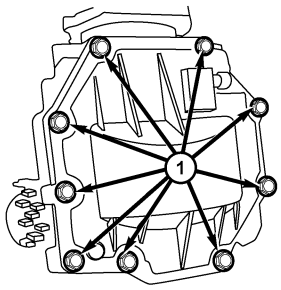

ltsm160013

2. Remove the small rear housing components. Loosen the 4 bolts (1) and remove the rear housing components.
   (Tighten: Rear intermediate shaft and rear differential bolts to 65 ± 6 N·m)

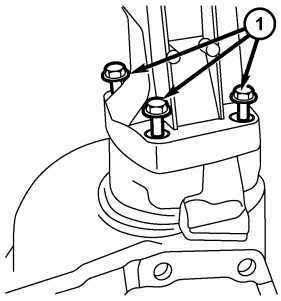

ltsm160014

08

Downloaded from www.Manualslib.com manuals search engine

3. Lock up the drive gear (1) and loosen the driven gear axle (2) locking nut.

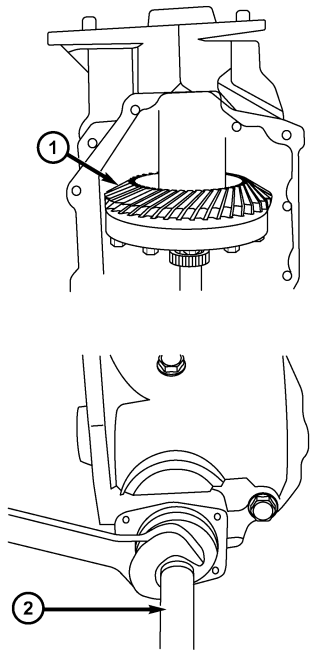

ltsm160015

4. Loosen the 7 bolts (1) and remove the right bearing support components.
(Tighten: Transfer case right bearing support bolts to 35 N·m)

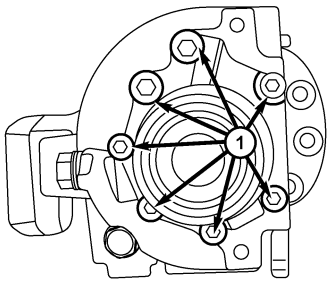

ltsm160017

5. Remove the input clutch and the drive gear.
Remove the retainer ring of the input clutch with snap-ring pliers; punch the output end out of the input clutch with a copper punch, and remove the input clutch and the drive gear.

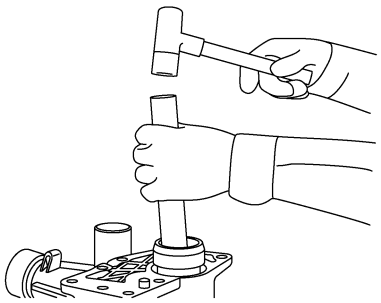

ltsm160018

Downloaded from www.Manualslib.com manuals search engine

6. Remove the fluid seal of the input clutch.
   Pry out the fluid seal with a slotted screwdriver.

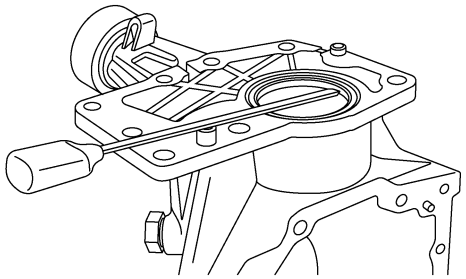

Assembly

1. Put a standard-sized 1.4 mm adjusting shim from the front bearing driven gear axle into the transfer case housing. Press in the front outer bearing race of the driven gear axle, then the rear outer bearing race, and press the front bearing of the driven gear axle into the driven gear axle; then put it into the collar and press in the rear inner bearing race. Attach the locknut, and adjust the tightening torque of the driven gear by adjusting the locknut until the driven gear axle can be driven with a torque of 1.0-1.5 N·m.
2. Assemble the flange axle.
   Link the drive gear ring of the transfer case to the flange axle with a mounting bolt, tighten the bolt to 110 N·m. Install the bearing to the left of the flange axle and the bearing to the left of the right bearing seat.
3. Choose the 2.4 mm standard-sized adjusting shim for the left bearing for the flange axle. Put the adjusting shim for the right bearing for the flange axle, the outer bearing race to the left of the flange axle and the flange axle into the transfer case.
   Measure the distance (A) from the contact surface of the right bearing seat and the transfer case to the right bearing seat and the left bearing's right end surface.
   Measure the distance (B) from the contact surface of the right bearing seat and the transfer case to the place where the right and left bearings on the right bearing seat.
4. Calculate the thickness value of the adjusting gasket S = A - B.
5. Select the adjusting gasket: S + (0.05 - 0.10) mm.
6. Assembly of the right bearing seat.
   Assemble the right bearing to the right bearing seat, install the retainer ring of the right bearing to the right bearing seat, install the fluid seals to the left and right of the right bearing seat, install the O-ring and link the right bearing seat to the transfer case housing with the bolt. Tighten the bolt to 35 N·m. The subassembly should be able to rotate with 3.0-5.0 N·m torque.
7. Adjust the hypoid gear engagement: first, spread red lead powder on the teeth of the driven bevel gear so that there will appear red prints on both working sides of the gear teeth of the driving bevel gear when turning it by hand. If the gear pattern prints on both engaging sides of the drive gear ring is higher than the center of the gear height near to the small end and occupy over 60% of the gear tooth width, then the pattern is correct; and the backlash between various gear teeth should fall between 0.13 mm and 0.18 mm.
   A: If the clearance between one lateral side of a tooth and that of the adjacent tooth are not correct, choose bearing shims to the left and right of the flange axle, repeat procedures 3, 4 and 5 to measure the clearance between one lateral side of a tooth and that of the adjacent tooth on the hypoid gear until the adjustment is correct.
   B: If the gear pattern print leans to the tooth tip, replace the adjusting shim from the front bearing of the driven gear to a thicker 1 mm; If the gear pattern print leans to the tooth root, then get the adjusting shim of the front bearing of driven gear axle needs to be subtracted by 1 mm. Examine the gear pattern print, repeat procedures 3, 4, 5, 6, and 7 until the gear pattern is correct.
8. Assemble the transfer case front shell, and tighten to 35 N·m.
9. Assemble the transfer case small rear housing onto the transfer case, and tighten to 35 N·m.
10. Assemble the input clutch fluid seal, O-ring, retainer ring and the input clutch; install the transfer case onto the transaxle and tighten to 80 N·m.

    NOTE: When assembling bearings and fluid seals, it is necessary to apply lubricating grease. The sealing surface of the housing must have sealant applied.

Downloaded from www.Manualslib.com manuals search engine

DRIVELINE & AXLE
09

CONTENTS

	page
Front Axle	**09-1**
Rear Axle	**09-8**
Interactive Torque Management (ITM) System (4x4)	**09-16**
Drive Shaft (4x4)	**09-24**

FRONT AXLE

GENERAL INFORMATION 09-2
- Description 09-2
- Operation 09-2
- Specifications 09-2
- Special Tools 09-3

DIAGNOSIS & TESTING 09-4
- Vehicle Inspection 09-4
- Noise Or Vibration On Turns 09-4
- Clunking Noise During Acceleration 09-4
- Shudder Or Vibration During Acceleration 09-4
- Vibration At High Speeds 09-4

ON-VEHICLE SERVICE 09-5

Front Hub and Bearing 09-5
- Removal & Installation 09-5

Front Axle Shaft 09-6
- Removal & Installation 09-6

09

Downloaded from www.Manualslib.com manuals search engine

GENERAL INFORMATION

Description

Front Axle

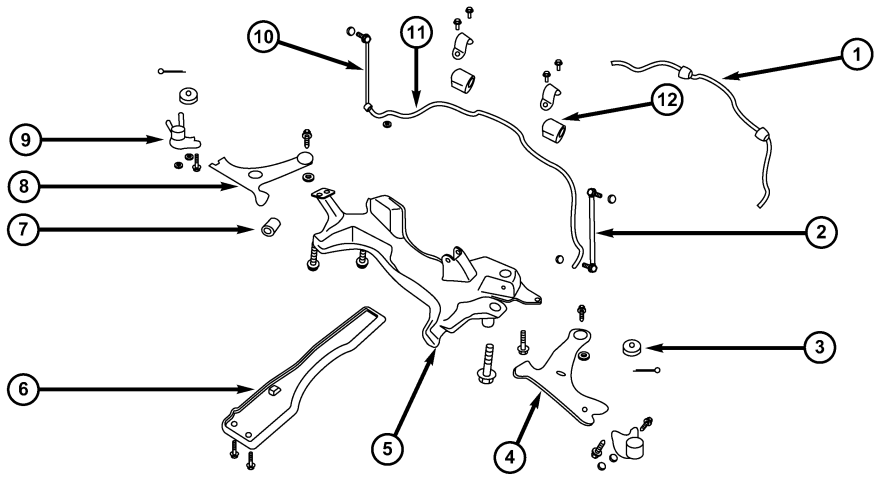

ltsm090004

1 - Front Stabilizer Bar	7 - Front Rubber Bushing
2 - Right Front Stabilizer Bar Link	8 - Left Control Arm
3 - Rear Rubber Bushing	9 - Control Arm Knuckle Pin
4 - Right Control Arm	10 - Left Front Stabilizer Bar Link
5 - Sub-Frame Assembly	11 - Stabilizer Bar
6 - Longitudinal Beam	12 - Rubber Support

This vehicle is equipped with unequal length half shafts, consisting of short left and long right half shafts. The half shafts consist of a fixed Constant Velocity (CV) joint at the outboard end connected by a solid shaft to a plunging CV joint on the inboard end. The inner CV joint has a splined end and is attached to the transaxle and is retained with a snap ring. The outer joint has a splined connection to the wheel hub and is retained with a lock nut.

For further information on the front axle assembly see Front Sub-Frame Assembly Description & Operation in Section 10 Suspension.

Operation

The front axle transmits torque from the transaxle to the wheels. In order to allow vertical and horizontal movement of the wheels, the axle shafts have plunging CV joints on the inboard ends of the axle shafts.

Specifications

Torque Specifications

DESCRIPTION	TORQUE (N·m)
Front Stabilizer Bar to Stabilizer Bar Link Nuts	40 - 50
Control Arm Knuckle Pin With Knuckle Assembly	110 - 130
Control Arm to Sub-Frame Bolt	170 - 190
Stabilizer Bar Link to Lower Suspension Lever	40 - 50

Downloaded from www.Manualslib.com manuals search engine

DESCRIPTION	TORQUE (N·m)
Right and Left Front Drive Shaft Nuts	260 - 280
Control Arm Knuckle Pin With Control Arm	140 - 160
Front Connecting Rod and Front Shock Absorber	40 - 50
Stabilizer Bar Clamp to Sub-Frame	22 - 28
Rear Rubber Buffer Assembly to Vehicle Body	22 - 28
Front Axle Hub Nut	135
Front Suspension Strut to Vehicle Body	45 - 55
Front Suspension And Bracket	75 - 85
Lower Sub-Frame Insert to Suspension Bolt	110 - 130
Longitudinal Beam to Vehicle (Front) Body Bolt	74 - 86
Upper Link to Trailing Arm Bolt	100 - 120
One On Each Side To Connect Upper Link With Rear Sub-Frame	80 - 101
One On Each Side To Connect Lower Control Arm With Trailing Arm	100 - 120
Steering Knuckle and Suspension Strut	110 - 130
Soft Gasket and Bracket of Front Suspension	75 - 85
Tie Rod to Steering Knuckle Nut	35 - 45
Sub-Frame and Gasket Of Vehicle (Front) Body	170 - 190
Sub-Frame and Longitudinal Beam Assembly Bolts	75 - 85
Steering Gear to Sub-Frame Bolts	75 - 85
Wheel Mounting Nut	110

Special Tools

Ball Joint Separator CH-10002	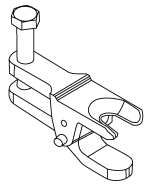 besm020086
Bearing Puller	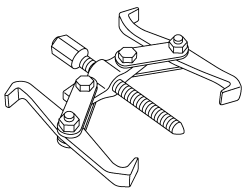 besm090009

Downloaded from www.Manualslib.com manuals search engine

DIAGNOSIS & TESTING

Vehicle Inspection

Inspect the following for leaks or damage:
- Check for grease in the vicinity of the inboard tripod joint and outboard CV joint.
- Check the inner or outer joint seal boot or seal boot clamp for damage.

Noise Or Vibration On Turns

A clicking noise or a vibration in turns could be caused by one of the following conditions:
- Damaged outer CV joint or damaged CV seal boot or seal boot clamps.
- Damaged inner CV joint or damaged CV seal boot or seal boot clamps.
- Noise may also be caused by another component of the vehicle coming in contact with the half shafts.

NOTE :
If the CV seal boot is damaged, this will result in the loss and/or contamination of the joint grease, resulting in inadequate lubrication of the joint.

Clunking Noise During Acceleration

This noise may be a result of one of the following conditions:
- A torn seal boot on the inner or outer joint of the half shaft assembly.
- A loose or missing clamp on the inner or outer joint of the half shaft assembly.
- A damaged or worn half shaft CV joint.

Shudder Or Vibration During Acceleration

This problem could be a result of:
- A worn or damaged half shaft inner tripod joint.
- Improper wheel alignment.

Vibration At High Speeds

This problem could be a result of:
- Foreign material (mud, etc.) packed on the backside of the wheel(s).
- Out of balance tires or wheels.
- Improper tire or wheel runout.

Downloaded from www.Manualslib.com manuals search engine

ON-VEHICLE SERVICE

Front Hub and Bearing

Removal & Installation

NOTE :
The following special tools are required to perform the repair procedure:
- Bearing Puller

1. Raise and support the vehicle.
2. Remove the wheel mounting nuts and the tire and wheel assembly.
   (Tighten: Wheel mounting nuts to 110 N·m)
3. Remove the front axle hub nut (1) from the front knuckle.
   (Tighten: Front axle hub nut to 135 N·m)

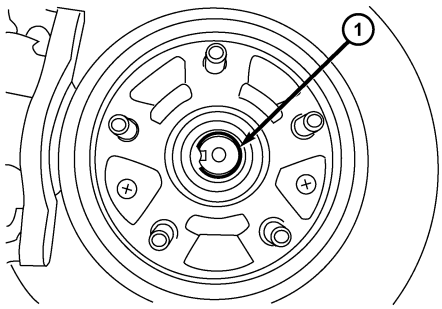

ltsm090006

4. Remove the front brake rotor (See Front Brake Rotor Removal & Installation in Section 12 Brakes).
5. Remove the wheel speed sensor mounting bolt (1), then remove the wheel speed sensor.

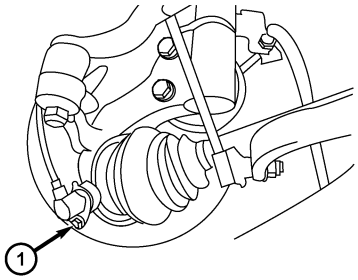

ltsm100045

6. Using the bearing puller, remove the wheel hub bearing from the knuckle.

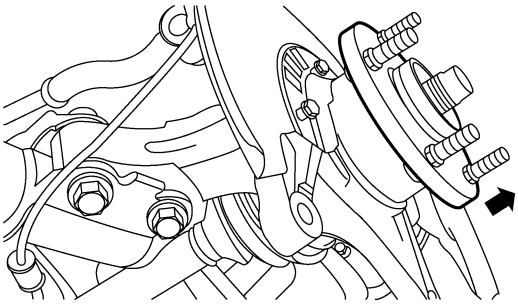
ltsm090003

7. Installation is in the reverse order of removal.

Downloaded from www.Manualslib.com manuals search engine

Front Axle Shaft

Removal & Installation

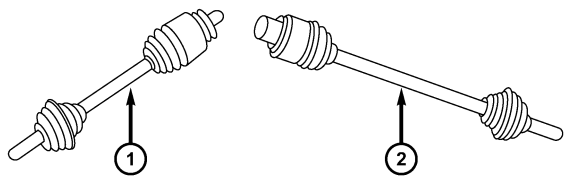

ltsm090002

1 - Left Half Shaft	2 - Right Half Shaft

1. Raise and support the vehicle.
2. Remove the wheel mounting nuts and the tire and wheel assembly.
   (Tighten: Wheel mounting nuts to 110 N·m)
3. Remove the front axle hub nut (1) from the front knuckle.
   (Tighten: Front axle hub nut to 135 N·m)

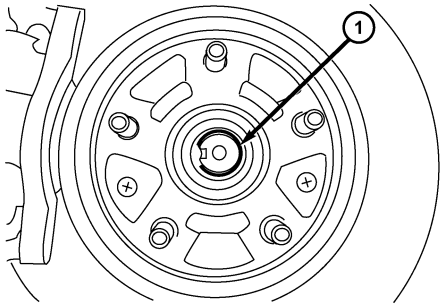

ltsm090006

4. Remove the wheel speed sensor bolt (1), then remove wheel speed sensor.

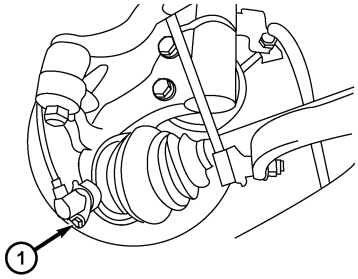

ltsm100045

5. Remove the brake caliper adapter to steering knuckle mounting bolts.
   (Tighten: Brake caliper adapter mounting bolts to 85 N·m)
6. Remove the brake caliper adapter (with the brake caliper still attached).

Downloaded from www.Manualslib.com manuals search engine

7. Remove the bolts (1) connecting the steering knuckle to the front strut assembly.

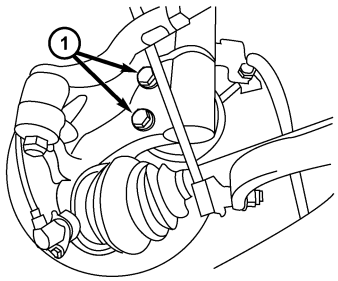

ltsm100041

CAUTION:
When removing the front axle shaft, do not subject the constant velocity joint to an excessive angle. Also, be careful not to excessively extend the slide joint.

8. Remove the front axle shaft from the transaxle using a suitable tool.
9. Installation is in the reverse order of removal.

Installation Notes:

- Rotate the joint up/down, left/right, and in axial direction, check for any rough movement or significant looseness.
- Check boot for cracks or other damage, and for grease leakage.
- If damaged, disassemble axle shaft to verify damage, and repair or replace as necessary.

Downloaded from www.Manualslib.com manuals search engine

REAR AXLE

GENERAL INFORMATION 09-9
- Description 09-9
- Operation 09-9
- Specifications 09-10
- Special Tools 09-10

DIAGNOSIS & TESTING 09-11
- Vehicle Inspection 09-11
- Shudder Or Vibration During Acceleration 09-11
- Vehicle Inspection 09-11
- Noise Or Vibration On Turns 09-11
- Clunking Noise During Acceleration 09-11
- Shudder Or Vibration During Acceleration 09-11
- Vibration At High Speeds 09-11
- Visual Inspection For Fluid Leaks (4x4) 09-11

ON-VEHICLE SERVICE 09-12

Rear Hub and Bearing 09-12
- Removal & Installation 09-12

Rear Axle Assembly (4x4) 09-13
- Description 09-13
- Operation 09-14
- Removal & Installation 09-15

Downloaded from www.Manualslib.com manuals search engine

GENERAL INFORMATION

Description

Rear Axle

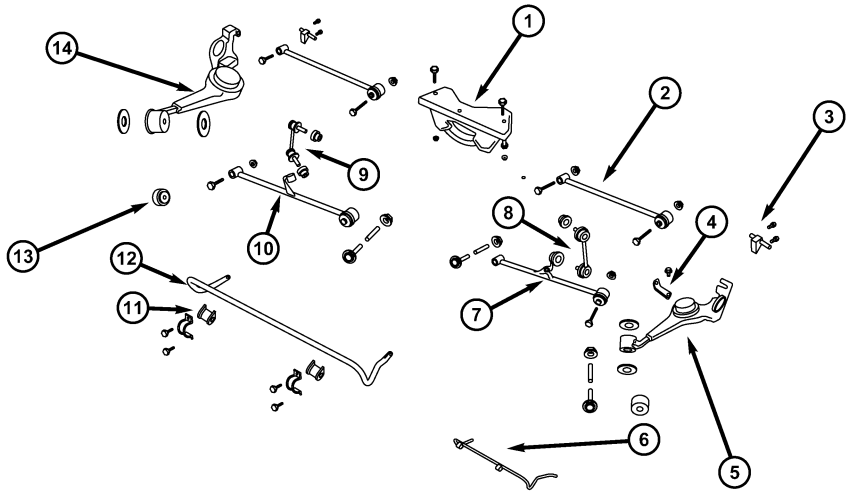

ltsm090005

1 - Rear Sub-Frame Assembly	8 - Left and Right Stabilizer Bar Links
2 - Rear Suspension Upper Link	9 - Right Rear Connecting Rod
3 - Left Rear Shock Absorber Mounting Bracket	10 - Right Rear Lower Control Arm
4 - Left Brake Line Bracket	11 - Rubber Support Seat
5 - Left Rear Trailing Arm	12 - Rear Stabilizer Bar
6 - Rear Stabilizer Bar	13 - Rubber Bushing
7 - Left Rear Lower Control Arm	14 - Right Rear Trailing Arm

The rear axle utilizes an independent design. This suspension system incorporates a separate wheel knuckle for each wheel and allows the wheels to react to road imperfections independent of each other. This independent action offers improved isolation from the effects of jounce and rebound.

The rear axle consists of the following components:

- Wheel Hub
- Wheel Studs
- Wheel Bearing
- Rear Trailing Arm

For further information on the rear axle assembly see Rear Suspension Description & Operation in Section 10 Suspension.

Operation

The rear axle utilizes a sealed wheel bearing housed in the rear knuckle assembly.

Downloaded from www.Manualslib.com manuals search engine

Specifications

Torque Specifications

DESCRIPTION	TORQUE (N·m)
Rear Stabilizer Bar Link	40 - 50
Rear Shock Absorber to Mounting Bracket Bolts	40 - 50
Rear Axle Front Suspension to Rear Driving Axle Bolts	75 - 85
Rear Axle Front Suspension to Rear Sub-Frame Bolts	115 - 125
Left and Right Rear Half-Shaft to Disc Brake Nut	260 - 270
Left and Right Rear Half-Shaft to Axle Output Flange Bolts	40
Intermediate Drive Shaft to Rear Axle Flange Bolts	59 - 71
Rear Axle Rear Suspension Mount Assembly to Rear Axle Bolt	75 - 85
Rear Axle Rear Suspension Mount to Vehicle Body Bolt	75 - 85
Rear Rubber Buffer to Vehicle Body Bolts	22 - 28
Upper Link to Rear Sub-Frame Bolts	100 - 120
Lower Control Arm to Rear Sub-Frame Bolts	100 - 120
Rear Trailing Arm to Vehicle Body Bolts	140 - 160
Rear Suspension to Bracket Bolts	115 - 125
Rear Suspension, Longitudinal Beam of Engine to Sub-Frame Bolts	75 - 85
Rear Stabilizer Bar Clamp to Vehicle Body Bolts	22 - 28
Rear Trailing Arm to Vehicle Body Bolts	140 - 160
Rear Cover of Control Arm to Sub-Frame Bolts	170 - 190
Soft Gasket to Bracket Of Rear Suspension Bolts	110 - 130
Sub-Frame And Gasket Of Vehicle (Rear) Body Bolts	170 - 190
Wheel Mounting Nut	110

Special Tools

Bearing Puller	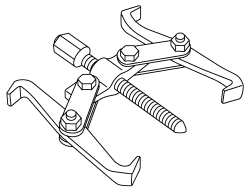 besm090009

Downloaded from www.Manualslib.com manuals search engine

DIAGNOSIS & TESTING

Vehicle Inspection

Inspect the rear axle for the following:
- Check the rear axle for loose bearings.
- Check the rear axle hub for any damage or excessive runout.

Shudder Or Vibration During Acceleration

This problem could be a result of:
- A worn or damaged half shaft inner tripod joint (4x4).
- Improper wheel alignment.

Vehicle Inspection

Inspect the following for leaks or damage:
- Check for grease in the vicinity of the inboard tripod joint and outboard CV joint (4x4).
- Check the inner or outer joint seal boot or seal boot clamp for damage (4x4).

Noise Or Vibration On Turns

A clicking noise or a vibration in turns could be caused by one of the following conditions:
- Damaged outer CV joint or damaged CV seal boot or seal boot clamps (4x4).
- Damaged inner CV joint or damaged CV seal boot or seal boot clamps (4x4).
- Noise may also be caused by another component of the vehicle coming in contact with the half shafts (4x4).

NOTE :
If the CV seal boot is damaged, this will result in the loss and/or contamination of the joint grease, resulting in inadequate lubrication of the joint.

Clunking Noise During Acceleration

This noise may be a result of one of the following conditions:
- A torn seal boot on the inner or outer joint of the half shaft assembly (4x4).
- A loose or missing clamp on the inner or outer joint of the half shaft assembly (4x4).
- A damaged or worn half shaft CV joint (4x4).

Shudder Or Vibration During Acceleration

This problem could be a result of:
- A worn or damaged half shaft inner tripod joint (4x4).
- Improper wheel alignment.

Vibration At High Speeds

This problem could be a result of:
- Foreign material (mud, etc.) packed on the backside of the wheel(s).
- Out of balance tires or wheels.
- Improper tire or wheel runout.

Visual Inspection For Fluid Leaks (4x4)

This problem could be a result of:
- Where seals are used: There should be no appearance of fluid leakage or abnormal abrasions.
- Where sealant is applied: There should be no appearance of fluid leakage or fluid seepage.
- Where attaching bolts are used, fluid-fill and fluid-draining plugs are used: There should be no appearance of fluid leakage, fluid seepage or loose bolts.
- The housing: There should be no appearance of fluid leakage or fluid seepage.

Downloaded from www.Manualslib.com manuals search engine

ON-VEHICLE SERVICE

Rear Hub and Bearing

Removal & Installation

1. Raise and support the vehicle.
2. Remove the wheel mounting nuts and the tire and wheel assembly.
   (Tighten: Wheel mounting nuts to 110 N·m)
3. Disconnect the ABS wheel speed sensor electrical connector.
4. While an assistant applies the brakes (to keep the hub from rotating), remove the hub nut from the axle half shaft.
   (Tighten: Hub nut to 135 N·m)
5. Remove the rear brake rotor (See Rear Brake Rotor Removal & Installation in Section 12 Brakes).
6. Remove the hub and bearing mounting nuts (1).
   (Tighten: Hub and bearing mounting nuts to 65 N·m)

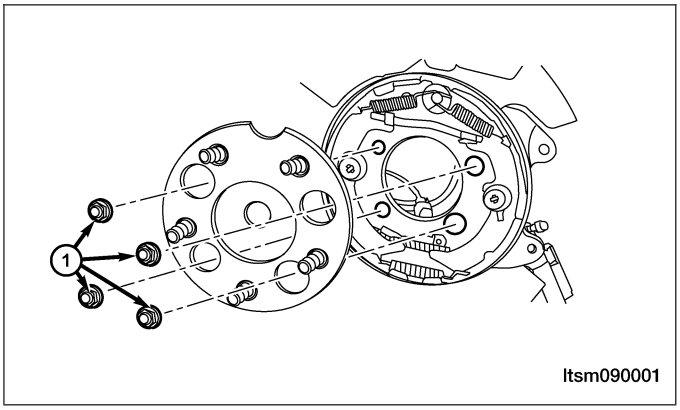

7. Take out the rear hub and bearing.
8. Installation is in the reverse order of the removal.

Downloaded from www.Manualslib.com manuals search engine

Rear Axle Assembly (4x4)

Description

Rear axle is mounted on the rear sub-frame assembly.

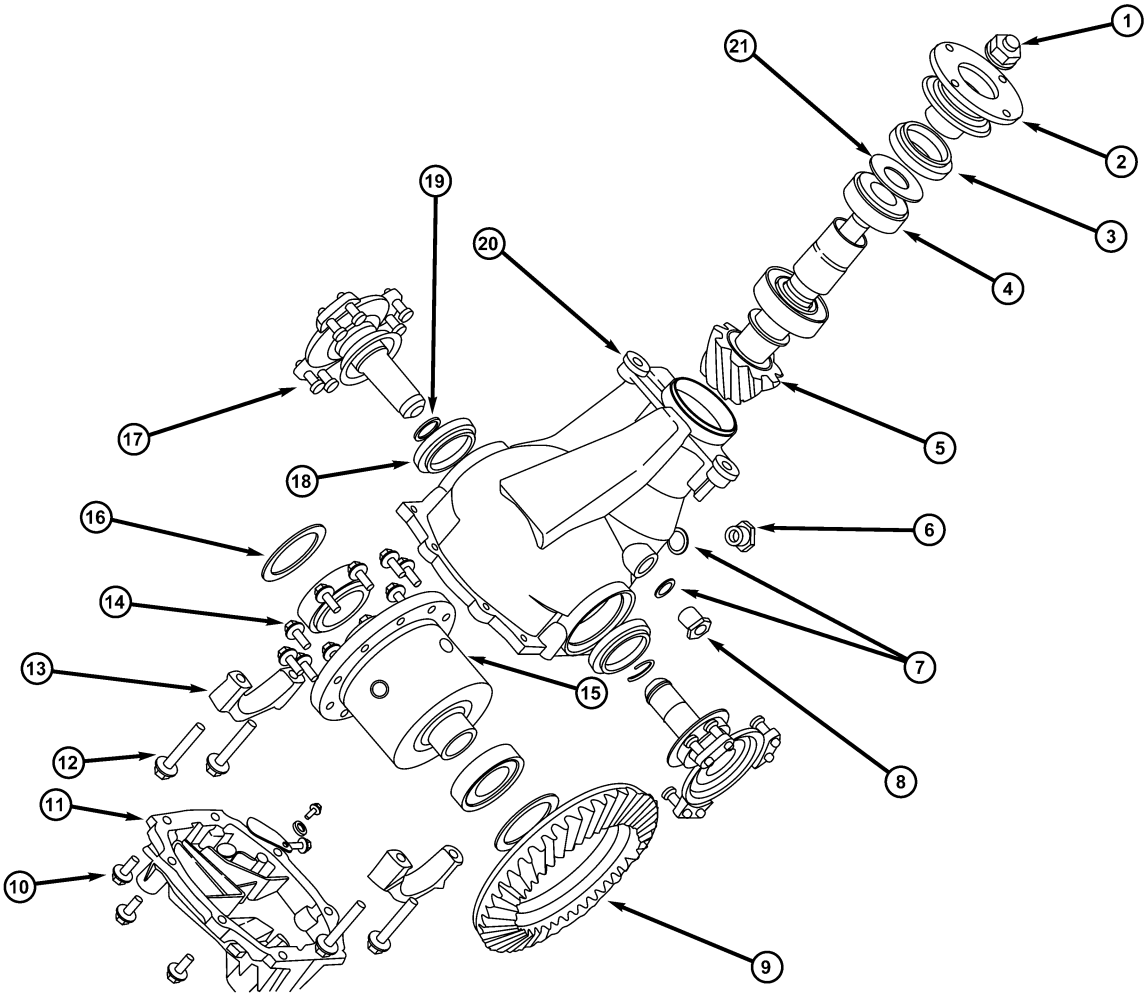

ltsm160009

1 - Drive Pinion Lock Nut	12 - Bearing Cap Bolts
2 - Companion Flange	13 - Bearing Cap
3 - Side Fluid Seal	14 - Differential Assembly
4 - Drive Pinion Front Bearing	15 - Differential Bolts
5 - Drive Pinion	16 - Washer
6 - Fluid-Filling Bolt	17 - Driven Gear Connecting Bolts
7 - Washer	18 - Driven Gear Side Fluid Seal
8 - Fluid-Limiting Bolt	19 - Driven Gear Washer
9 - Drive Gear	20 - Rear Axle Cover
10 - Carrier Cover Bolts	21 - Drive Pinion Washer
11 - Carrier Cover	

Downloaded from www.Manualslib.com manuals search engine

Operation

The axle receives power from the transaxle through the rear intermediate drive shaft. The drive shaft is connected to the pinion gear which rotates the differential through the gear mesh with the ring gear bolted to the differential case. The engine power is transmitted to the axle shafts through the pinion mate and side gears.

Removal & Installation

1. Drain the differential gear fluid.
2. Remove the rear intermediate drive shaft to rear axle flange bolts.
   (Tighten: Rear intermediate drive shaft to rear axle flange bolts to 65 ± 6 N·m)
3. Remove the bolts (1) from the left rear half shaft to the rear axle output flange.
   (Tighten: Rear half shaft to rear axle output flange bolts to 40 N·m)
4. Remove the left rear half shaft.

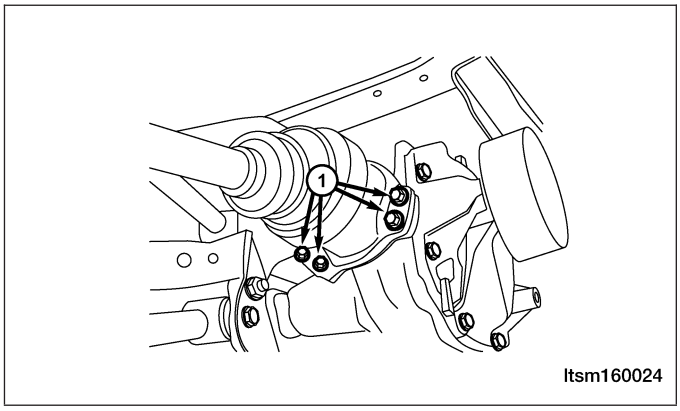

5. Remove the bolts (1) from the right rear half shaft to the rear axle output flange.
   (Tighten: Rear half shaft to rear axle output flange bolts to 40 N·m)
6. Remove the right rear half shaft.

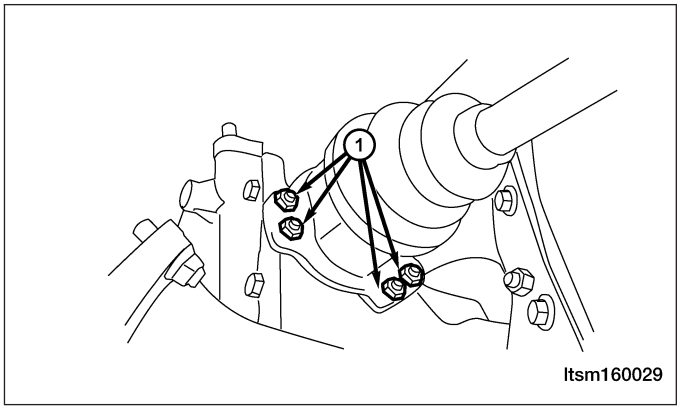

7. Remove the mounting bolts (1) to the rear axle differential housing.
   (Tighten: Mounting bolts to the rear axle differential housing to 40 N·m)

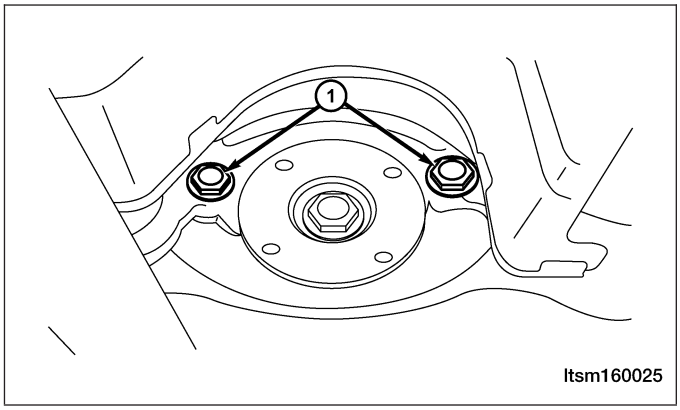

Downloaded from www.Manualslib.com manuals search engine

8. Remove the bolts (1) from the rear axle housing mounts and the body.
   (Tighten: Rear axle housing mount bolts to 70 N·m)

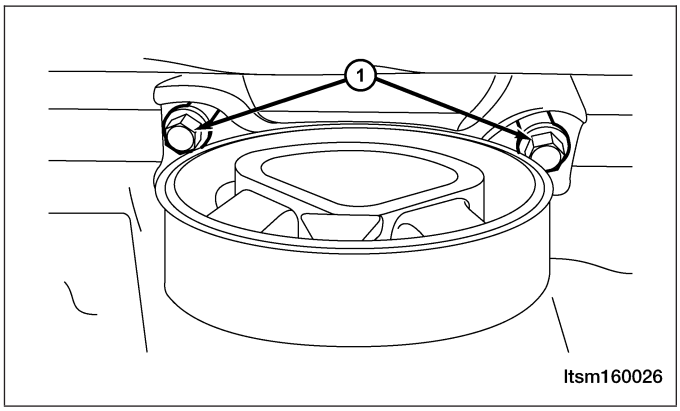

9. Remove the rear axle housing assembly from the vehicle.
10. Installation is in the reverse order of removal.

Downloaded from www.Manualslib.com manuals search engine

INTERACTIVE TORQUE MANAGEMENT (ITM) SYSTEM (4X4)

GENERAL INFORMATION 09-17
Description 09-17
Operation 09-18
Specification 09-18
Special Tools 09-20

ON-VEHICLE SERVICE 09-21

Interactive Torque Management (ITM) Controller 09-21
Description 09-21
Operation 09-21
Removal & Installation 09-22

Interactive Torque Management (ITM) Control Module 09-23
Description 09-23
Operation 09-23
Removal & Installation 09-23

Downloaded from www.Manualslib.com manuals search engine

Description

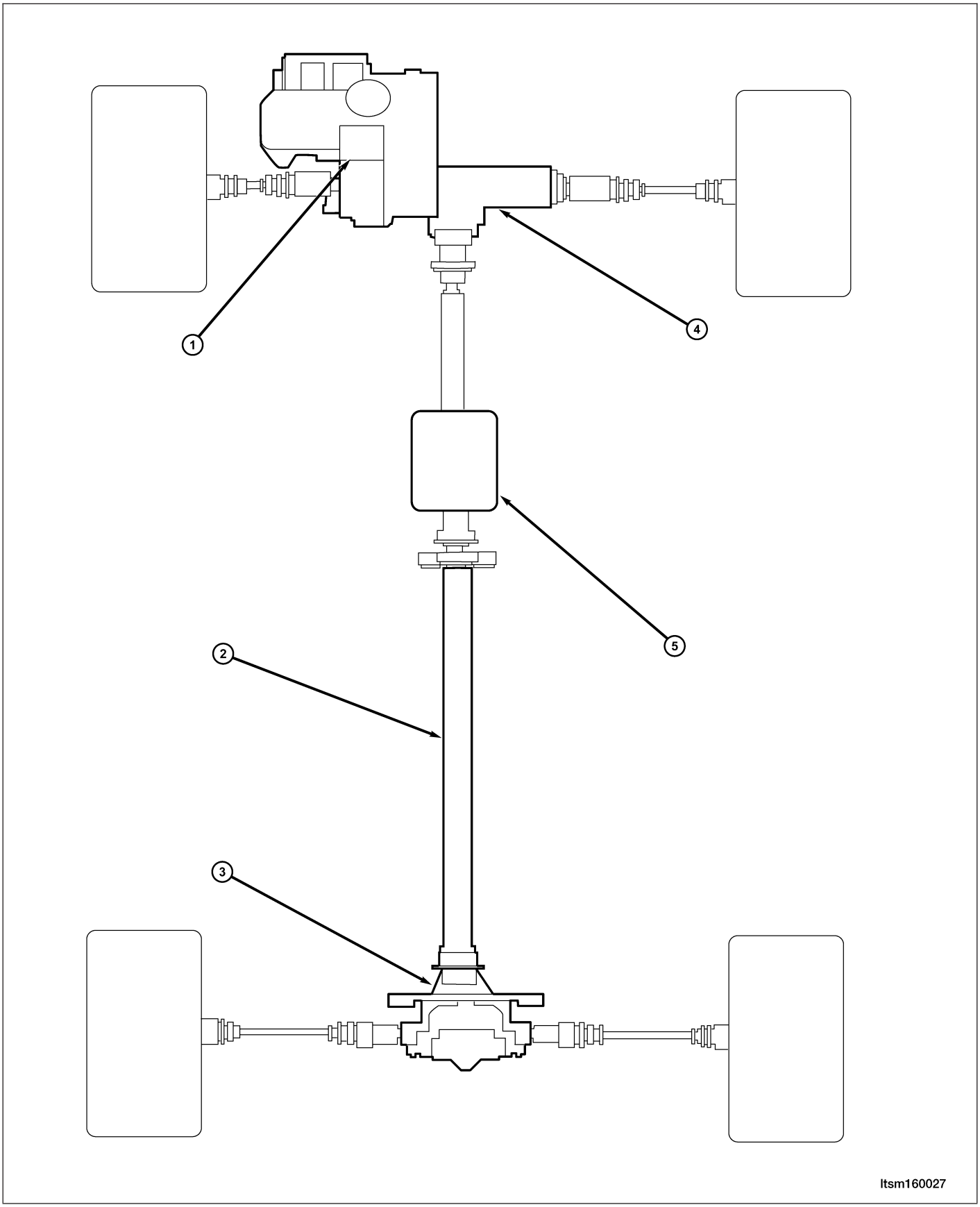

Downloaded from www.Manualslib.com manuals search engine

1 - Transaxle
2 - Drive Line
3 - Rear Axle

4 - Power Transfer
5 - ITM Controller

The Tiggo 4WD is the first 4WD vehicle produced by Chery. The 4WD system is equipped with a QR523T transaxle manufactured by Chery.

An active torque transfer system is used, and an interactive torque management system (ITM) is equipped to make it possible to intelligently distribute the drive force for the front wheels and rear wheels according to different road conditions. For example, on a smooth road, the vehicle utilizes front-wheel drive. When road conditions worsen, the ITM will automatically switch to 4WD. The use of ITM allows the Tiggo vehicle to be more economical and more efficient than the common 4WD system.

Operation

The intelligent 4WD system is controlled by an interactive torque management system (ITM) module. The ITM module communicates with the Engine Control Module (ECM) and the Antilock Brake System (ABS) controller through the CAN network. The ITM module collects data from sensors on the vehicle body to determine the condition of the drive wheels. Based on the sensor inputs, the ITM module controls the ITM controller. The ITM controller will then distribute a portion of the torque to the rear drive axle as needed. The ITM controller works as an electromagnetic clutch. Different torque can be transferred by changing the electric current of the ITM controller. The ITM controller will be able to distribute the torque of the front drive axle and the rear drive axle at different ratios according to the various dynamic conditions of the vehicle.

Specification

Transaxle Specifications

MODEL	TYPE	DISTANCE BETWEEN CENTERS (mm)	MAX INPUT TORQUE (N·m)	GEAR / SPEED RATIO						
				1st	2nd	3rd	4th	5th	Reverse	Final Drive
QR523T	Front-Wheel Drive Transaxle	78	195	3.583	1.947	1.379	1.303	0.821	3.364	4.3125

Downloaded from www.Manualslib.com manuals search engine

Torque Specifications

DESCRIPTION	TORQUE (N·m)
Bow Beam to Plate Bolts	60 ± 5
Front Intermediate Shaft to ITM Controller Bolts	70 ± 7
ITM Bracket to Bow Beam Bolts	60 ± 5
ITM Control Module Bolts	9 ± 1
Transaxle to Transfer Case Bolts	80
Rear Intermediate Shaft to ITM Controller Bolts	39 ± 3
Rear Intermediate Shaft to Rear Differential Bolts	65 ± 6
Transfer Case Fluid-Limiting Bolt	40 ± 3
Transfer Case Fluid Fill Bolt	40 ± 3
Transfer Case Fluid Drain Bolt	40 ± 3
Transfer Case Front Housing Bolt	35
Transfer Case Rear Housing Bolts	40
Transfer Case Right Bearing Seat Bolt	35
Transfer Case Vent Bolt	18 ± 3

Fluid Specifications

NAME	TYPE	QUANTITY	MAINTENANCE TERM
Transaxle Gear Fluid	GL-4 75w-90	2.2 Liters	1 year / 30,000 km
Transfer Case Gear Fluid	GL-5 80w-90	0.8 Liters	50,000 km
Rear Final Drive Gear Fluid	Hypoid 85w-90	0.8 Liters	50,000 km

Transfer Case Specifications

Differential Assembly	Side Gear	Type of Gear	Straight bevel gear
		Number of Gears	14
	Planetary Gear	Type of Gear	Straight bevel gear
		Number of Gears	10
Hypoid G Gear	Drive Gear	Number of Gears	41
	Driven Gear	Number of Gears	14

ITM Control Module Electronic Signals

SIGNALS	MODE OF PROVISION	SIGNAL SOURCE
Signals Of The Four Wheel Speed	CAN	Wheel Speed Sensor
Vehicle Speed Signals	CAN	Vehicle Speed Sensor
Acceleration Signals	CAN	G Sensor
Engine Speed Signals	CAN	Crankshaft Position Sensor
Throttle Position Signals	CAN	Throttle Position Sensor
Steering Wheel Angle Signals	Simulated	ITM Module
Ignition Switch Signals	Direct	Ignition Switch

Downloaded from www.Manualslib.com manuals search engine

Special Tools

Diagnostic Scan Tool X-431	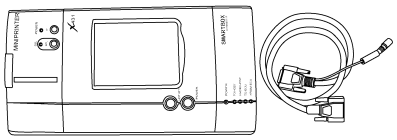 besm030001
Digital Multimeter Fluke 15B & 17B	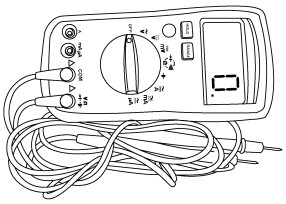 besm030002

Downloaded from www.Manualslib.com manuals search engine

ON-VEHICLE SERVICE

Interactive Torque Management (ITM) Controller

Description

The ITM Controller is mounted between the front and rear intermediate drive shafts.

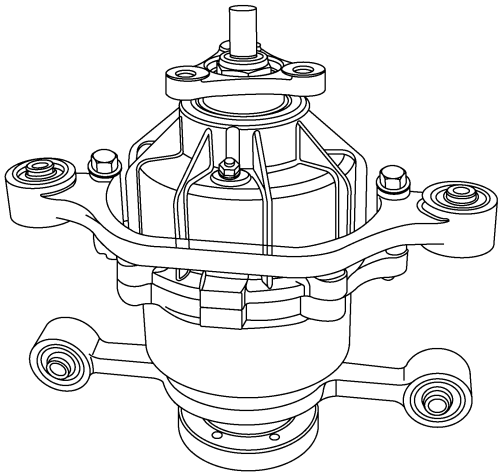

ltsm160008

NOTE :
Under normal vehicle usage, the ITM Controller requires no maintenance

09

Operation

The ITM Controller transfers the torque output from the transaxle to the rear drive axle.

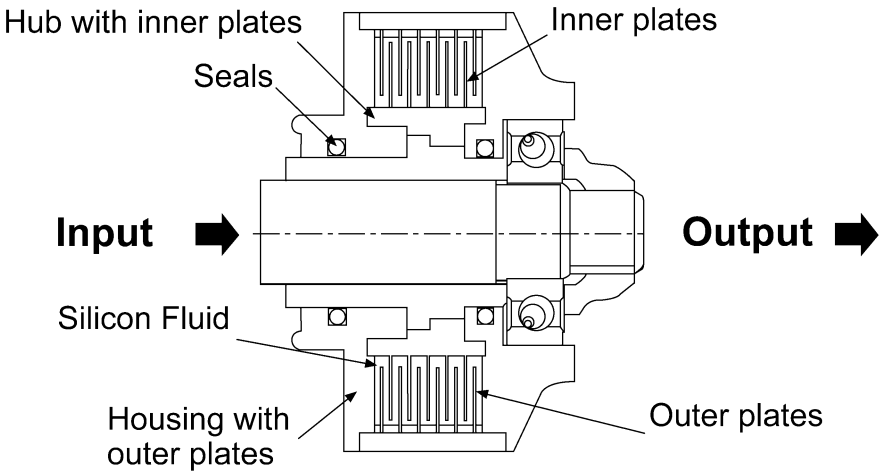

ltsm160005t

Downloaded from www.Manualslib.com manuals search engine

Removal & Installation

1. Raise and support the vehicle.
2. Remove the front intermediate drive shaft (See Front Intermediate Drive Shaft Removal & Installation in Section 09 Driveline & Axle).
3. Remove the rear intermediate drive shaft (See Rear Intermediate Drive Shaft Removal & Installation in Section 09 Driveline & Axle).
4. Remove the ITM Controller electrical connector (1).

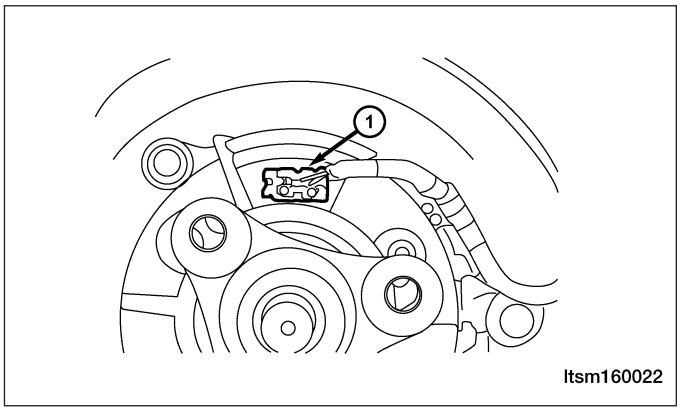

5. Remove the ITM Controller mounting bracket bolts (1).
   (Tighten: ITM Controller mounting bracket bolts to 60 ± 5 N·m)

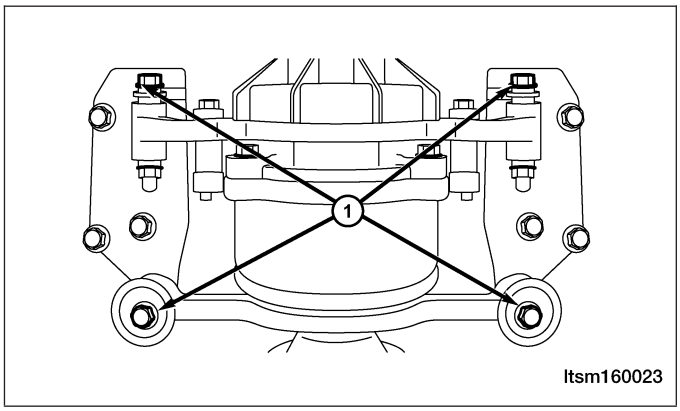

6. Remove the ITM Controller assembly.

NOTE :
The ITM Controller assembly is a precision component, be careful to avoid dropping or mis-handling the ITM Controller during removal.

7. Installation is in the reverse order of removal.

Downloaded from www.Manualslib.com manuals search engine

Interactive Torque Management (ITM) Control Module

Description

The ITM control module is located under the driver seat.

Operation

The ITM control module collects signals from the Engine Control Module (ECM) and Antilock Brake System (ABS) controller, judges the vehicle driving state, controls the working electric current of the ITM controller and distributes the torque of the front axle and the rear axle intelligently according to such signals.

Removal & Installation

1. Disconnect the negative battery cable.
2. Adjust the left front seat fully backward.
3. Remove the ITM control module mounting bolts.
4. Remove the ITM control module electrical connector.
5. Remove the ITM control module (1).
6. Installation is in the reverse order of removal.

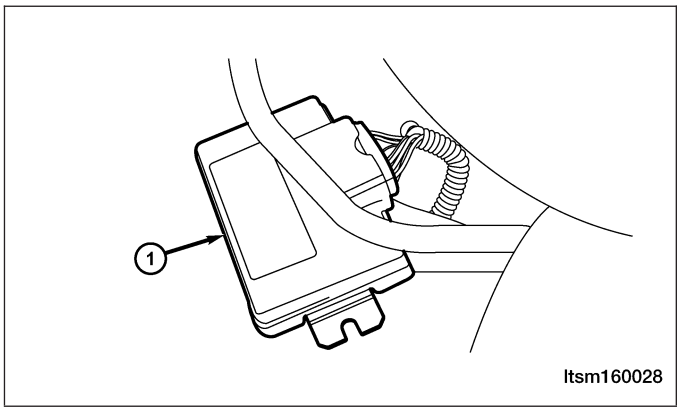

Downloaded from www.Manualslib.com manuals search engine

DRIVE SHAFT (4X4)

GENERAL INFORMATION 09-25
Description 09-25
Operation 09-25
Specifications 09-25

DIAGNOSIS & TESTING 09-26
Vehicle Inspection 09-26
Shudder Or Vibration During Acceleration 09-26
Clunking Noise During Acceleration 09-26
Shudder Or Vibration During Acceleration 09-26
Vibration At High Speeds 09-26

ON-VEHICLE SERVICE 09-27

Front Intermediate Drive Shaft 09-27
Removal & Installation 09-27

Rear Intermediate Drive Shaft 09-27
Removal & Installation 09-27

Downloaded from www.Manualslib.com manuals search engine

GENERAL INFORMATION

Description

The drive shafts for the 4x4 are separated into the front intermediate drive shaft and the rear intermediate drive shaft. The front intermediate drive shaft is installed between the transfer case and the Interactive Torque Management (ITM) controller. The rear intermediate drive shaft is installed between the ITM controller and the rear axle.

Operation

The drive shafts transfer the torque from the transaxle to the rear axle.

Specifications

Torque Specifications

DESCRIPTION	TORQUE (N·m)
Front Intermediate Drive Shaft to ITM Controller Bolts	70 ± 7
Rear Intermediate Drive Shaft to ITM Controller Bolts	39 ± 3
Rear Intermediate Drive Shaft to Body Bolts	60 ± 5
Rear Intermediate Drive Shaft to Rear Axle Flange	65 ± 6

Downloaded from www.Manualslib.com manuals search engine

DIAGNOSIS & TESTING

Vehicle Inspection

Inspect the drive shaft for the following:
- Check the drive shaft for loose bearings.
- Check the drive shaft for any damage or excessive runout.

Shudder Or Vibration During Acceleration

This problem could be a result of:
- A worn or damaged drive shaft joint.
- Improper wheel alignment.

Clunking Noise During Acceleration

This noise may be a result of one of the following conditions:
- A worn drive shaft assembly.
- A loose drive shaft assembly.
- A damaged or worn drive shaft joint.

Shudder Or Vibration During Acceleration

This problem could be a result of:
- A worn or damaged drive shaft joint.
- Improper wheel alignment.

Vibration At High Speeds

This problem could be a result of:
- Foreign material (mud, etc.) packed on the backside of the wheel(s).
- Out of balance tires or wheels.
- Improper tire or wheel runout.

Downloaded from www.Manualslib.com manuals search engine

ON-VEHICLE SERVICE

Front Intermediate Drive Shaft

Removal & Installation

1. Remove the bolts (1) between the front intermediate drive shaft and the ITM Controller input shaft.
   (Tighten: Front intermediate drive shaft and ITM controller bolts to 70 ± 7 N·m)

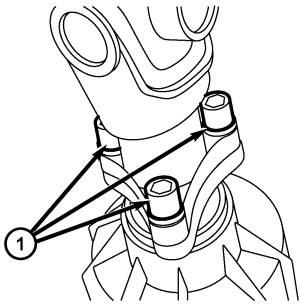

ltsm160020

2. Installation is in the reverse order of removal.

Rear Intermediate Drive Shaft

Removal & Installation

1. Remove the bolts between the rear intermediate drive shaft and the ITM Controller output shaft.
   (Tighten: Rear intermediate drive shaft and ITM controller bolts to 39 ± 3 N·m)
2. Remove the bolts between the intermediate drive shaft bracket and the vehicle body, and then remove the bracket.
   (Tighten: Rear intermediate drive shaft to body bolts to 60 ± 5 N·m)
3. Remove the bolts (1) between the rear intermediate drive shaft and the rear axle flange, and remove the rear intermediate drive shaft.
   (Tighten: Rear intermediate drive shaft and rear axle flange bolts to 65 ± 6 N·m)

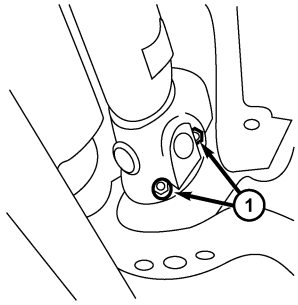

ltsm160021

4. Installation is in the reverse order of removal.

Downloaded from www.Manualslib.com manuals search engine

SUSPENSION
10

CONTENTS

	page
Front Suspension	**10-1**
Rear Suspension	**10-25**
Alignment	**10-38**
Wheels and Tires	**10-47**

FRONT SUSPENSION

GENERAL INFORMATION 10-2
- Description 10-2
- Operation 10-4
- Specifications 10-4
- Special Tools 10-5

DIAGNOSIS & TESTING 10-6
- Vehicle Suspension Troubleshooting Chart 10-6

ON-VEHICLE SERVICE 10-7

Front Steering Knuckle 10-7
- Description 10-7
- Operation 10-7
- Removal & Installation 10-7

Front Lower Control Arm 10-9
- Description 10-9
- Operation 10-9
- Removal & Installation 10-9

Front Stabilizer Bar Link 10-11
- Removal & Installation 10-11

Front Stabilizer Bar 10-12
- Removal & Installation 10-12

Front Strut Assembly 10-13
- Description 10-13
- Operation 10-14
- Diagnosis & Testing 10-14
- Removal & Installation 10-14

Front Coil Spring 10-16
- Description 10-16
- Operation 10-16
- Removal & Installation 10-16

Front Sub-Frame Assembly 10-17
- Removal & Installation 10-17

UNIT REPAIR 10-21

Front Strut 10-21
- Disassemble 10-21
- Inspection 10-22
- Strut Disposal Procedure 10-22
- Assembly 10-23

Downloaded from www.Manualslib.com manuals search engine

GENERAL INFORMATION

Description

The front suspension system incorporates a strut assembly that takes the place of the upper control arm and upper ball joint. The strut carries out the function of a shock absorber and is encompassed by a coil spring. The strut assembly supports the weight of the vehicle and is also the pivot point for the steering knuckle. This system uses a lower control arm and ball joint for the lower pivot point of the steering knuckle.

Downloaded from www.Manualslib.com manuals search engine

The front suspension consists of the following components:

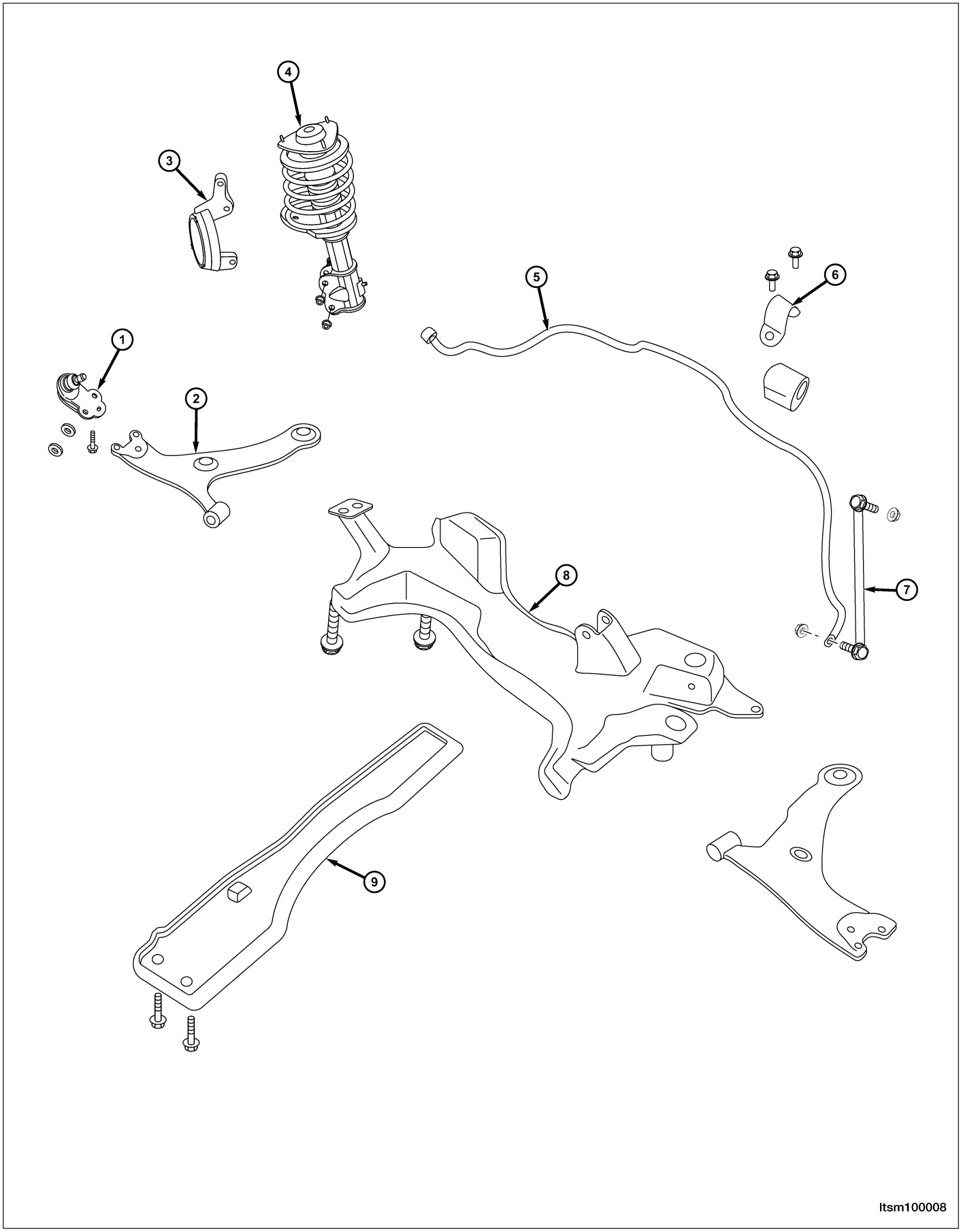

Downloaded from www.Manualslib.com manuals search engine

1 - Front Lower Control Arm Ball Joint	6 - Front Stabilizer Bar Bracket
2 - Front Lower Control Arm	7 - Front Stabilizer Bar Link
3 - Steering Knuckle	8 - Front Sub-Frame Assembly
4 - Front Strut Assembly	9 - Side Member Assembly
5 - Front Stabilizer Bar	

WARNING!

Do not remove the strut rod nut while the strut assembly is installed in the vehicle, or before the coil spring is compressed with a spring compressor. The spring is held under high pressure and must be compressed before the strut rod nut can be removed.

CAUTION:
At no time when servicing a vehicle can a sheet metal screw, bolt, or other metal fastener be installed in the shock tower to replace the original plastic clamp. It may come in contact with the strut or coil spring.

CAUTION:
The wheel bearing will be damaged if the vehicle is rolled with the axle shaft hub nut loose.

Operation

The front suspension utilizes a MacPherson strut system. This suspension system incorporates a strut assembly that takes the place of the upper arm and ball joint. The strut performs the function of a shock absorber and is encompassed by a coil spring.

Specifications

Torque Specifications

DESCRIPTION	TORQUE (N·m)
Connecting Rod And Front Stabilizer Bar	40 - 50
Connect The Right And Left Assembly Of Front Drive Shaft With Brake Disc	260 - 270
Control Arm And Sub-Frame	170 - 190
Connect Intermediate Propeller Shaft With Vehicle Body	58 - 68
Connecting Rod With Lower Suspension Lever	40 - 50
Connect Control Arm Knuckle Pin With Knuckle Assembly	110 - 130
Connect Control Arm Knuckle Pin With Control Arm	140 - 160
Front Connecting Rod And Front Shock Absorber	40 - 50
Front Axle Shaft Nut	135
Fix Stabilizer Bar Clamp To Sub-Frame	22 - 28
Front Shock Absorber and Coil Spring	100 - 120
Front Suspension Strut And Vehicle Body	45 - 55
Front Suspension And Bracket	75 - 85
Insert From The Lower Part Of Sub-Frame, And The Bolt Is On The Suspension. The Middle Part Shall Be Clamped To The Main Longitudinal Beam Of Engine	110 - 130

Downloaded from www.Manualslib.com manuals search engine

DESCRIPTION	TORQUE (N·m)
Longitudinal Beam And Flat Gasket Of Vehicle (Front) Body	74 - 86
One On Each Side To Connect Upper Link With Towing Arm	100 - 120
One On Each Side To Connect Lower Control Arm With Towing Arm	100 - 120
Steering Knuckle And Suspension Strut	110 - 130
Soft Gasket And Bracket Of Front Suspension	75 - 85
Steering Knuckle Tie Rod And Steering Knuckle	32 - 38
Sub-Frame And Gasket Of Vehicle (Front) Body	170 - 190
Sub-Frame And Longitudinal Beam Welding Assembly	75 - 85
Steering Gear And Sub-Frame	75 - 85
Wheel Mounting Nut	110

Special Tools

Ball Joint Separator CH-10002	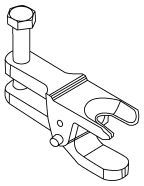 besm020086

10

Downloaded from www.Manualslib.com manuals search engine

Vehicle Suspension Troubleshooting Chart

CONDITION	POSSIBLE CAUSES	CORRECTION
Front End Whine On Turns	· Defective wheel bearing. · Incorrect wheel alignment. · Low power steering fluid level.	· Replace wheel bearing. · Check and reset wheel alignment. · Fill power steering fluid reservoir to proper level and check for leaks (make sure all air is bled from the system).
Road Wander	· Incorrect tire pressure. · Incorrect front or rear wheel Toe-in. · Worn wheel bearings. · Worn control arm bushings. · Excessive friction in strut upper bearing.	· Inflate tires to recommended pressure. · Correct front or rear wheel Toe-in. · Replace wheel bearing. · Replace control arm. · Replace strut bearing.
Lateral Pull	· Unequal tire pressure. · Incorrect front wheel camber. · Wheel braking. · Excessive cross-caster.	· Inflate all tires to recommended pressure. · Check and reset front wheel camber. · Correct braking condition causing lateral pull. · Check wheel alignment and adjust as necessary.

Downloaded from www.Manualslib.com manuals search engine

ON-VEHICLE SERVICE

Front Steering Knuckle

Description

The steering knuckle is a single casting with legs machined for attachment to the front strut assembly on the top and steering linkage on the trailing leading end. The steering knuckle also has two machined, drilled legs on the end casting to support and align the front disc brake caliper adapter.

Operation

The steering knuckle supports the hub and bearing. The front suspension steering knuckle is not a repairable component of the front suspension. It must be replaced if damaged in any way. If it is determined that the steering knuckle is bent when servicing the vehicle, no attempt should be made to straighten the steering knuckle.

Removal & Installation

NOTE :
The following special tools are required to perform the repair procedure:
- CH-10002 - Ball Joint Separator

1. Raise and support the vehicle.
2. Remove the wheel mounting nuts and the wheel assembly. (Tighten: Wheel mounting nuts to 110 N·m)
3. Use a suitable tool and un-stake the front axle shaft hub nut (1) from the groove in the front axle shaft.

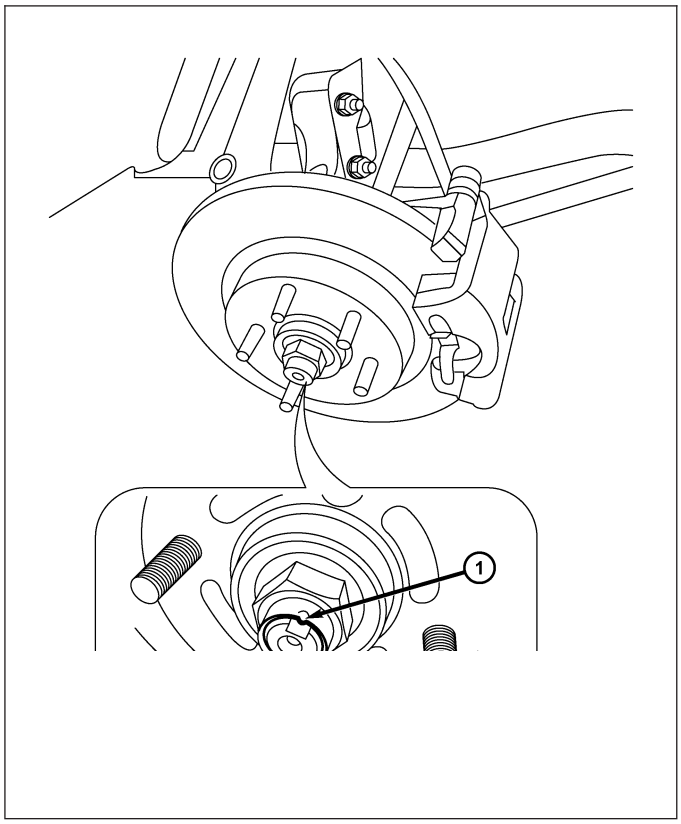

10

Downloaded from www.Manualslib.com manuals search engine

4. While a helper applies the brakes to keep the hub from rotating, remove the front axle shaft nut (1). (Tighten: Front axle shaft nut to 135 N·m)

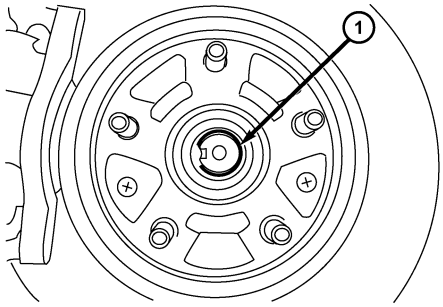

ltsm090006

5. Access and remove the front brake rotor (See Front Brake Rotor Remove & Installation in Section 12 Brakes).
6. Remove the wheel speed sensor mounting bolt (1). (Tighten: Wheel speed sensor mounting bolt to 10 ± 1 N·m)
7. Remove the wheel speed sensor and set it aside.

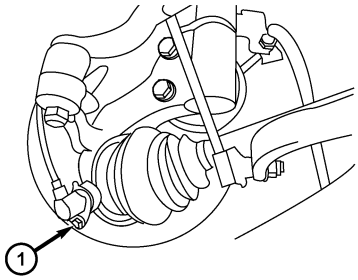

ltsm100045

8. Remove the lower ball joint mounting nut (1) attaching the lower control arm to the knuckle. (Tighten: Control arm to steering knuckle nut to 120 ± 10 N·m)

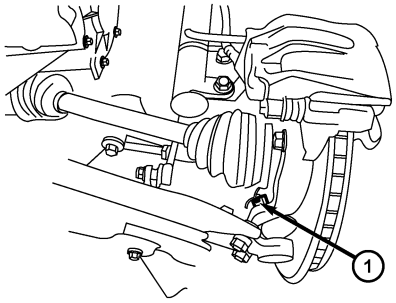

ltsm100006

9. Remove the nut (1) attaching the outer tie rod end to the steering knuckle. (Tighten: Outer tie rod end nut to 32 - 38 N·m)

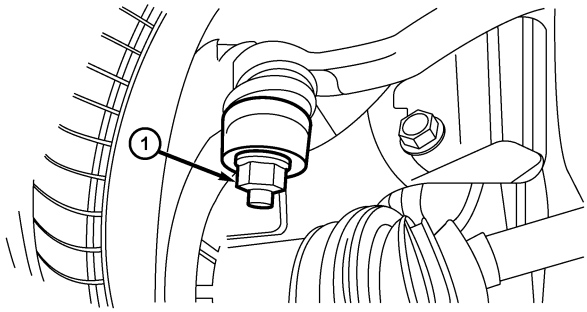

ltsm110034

Downloaded from www.Manualslib.com manuals search engine

10. Using special tool CH-10002, remove the outer tie rod end from the steering knuckle.

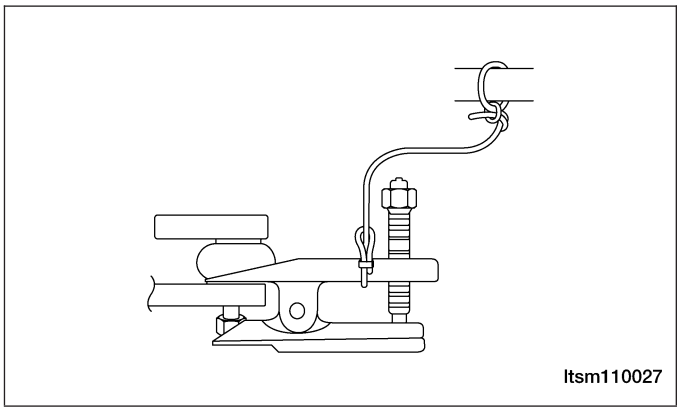

11. While holding the bolt heads stationary, remove the two nuts (1) from the bolts attaching the strut to the knuckle.
(Tighten: Strut to the knuckle nuts to 135 N·m)

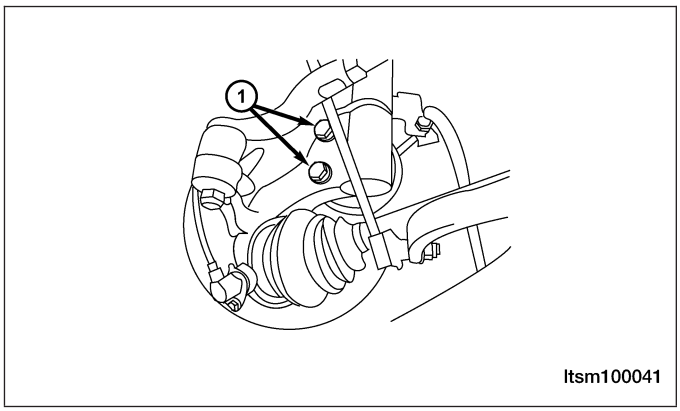

NOTE :
Do not allow the half shaft to hang by the inner C/V joint. It must be supported to keep the joint from separating during this operation.

12. Pull the knuckle off the half shaft outer C/V joint splines and remove the knuckle from the vehicle.
13. If required, remove the screws fastening the shield to the knuckle.
14. If required, use a suitable tool to press the hub and bearing out of the knuckle.
15. Installation is in the reverse order of removal.

Installation Notes:

- After installing the front steering knuckle, perform a front end alignment (See Front Wheel Alignment in Section 10 Suspension).

Front Lower Control Arm

Description

The lower control arm is located between the steering knuckle and the vehicle sub-frame. The lower control arm uses a lower ball joint on the outer end and two sub-frame mounts on the inner end.

Operation

The front lower control arm supports the steering knuckle. The lower control arm controls the vehicle steering by maintaining the proper wheel alignment through all driving conditions.

Removal & Installation

NOTE :
Inspect the lower control arm for signs of damage from contact with the ground or road debris. If the lower control arm shows any sign of damage, look for distortion. Do not attempt to repair or straighten a broken or bent lower control arm. If damaged, the lower control arm is serviced only as a complete component.

Downloaded from www.Manualslib.com manuals search engine

1. Raise and support the vehicle.
2. Remove the wheel mounting nuts and the wheel assembly.
   (Tighten: Wheel mounting nuts to 110 N·m)
3. Remove the bolt (1) between the control arm and the sub-frame.
   (Tighten: Control arm to sub-frame bolt to 180 ± 10 N·m)

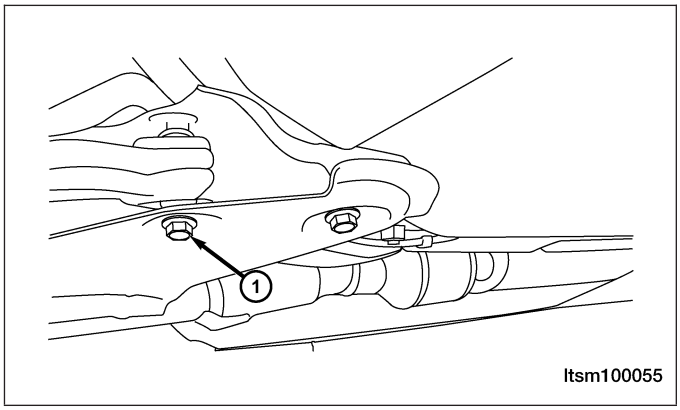

4. Remove the nut (1) between the control arm and the steering knuckle.
   (Tighten: Control arm to steering knuckle nut to 120 ± 10 N·m)

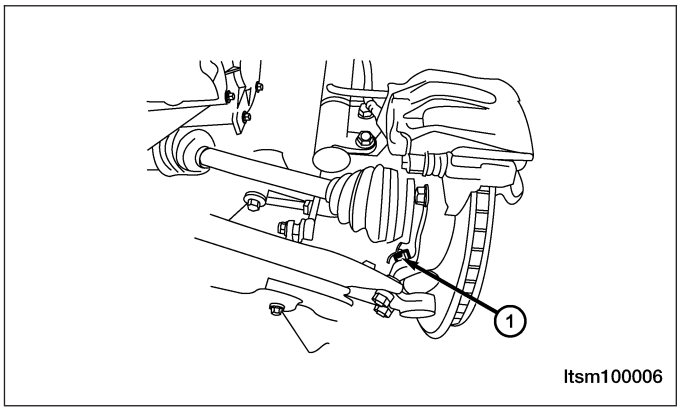

5. Remove the bolt (1) between the rear rubber sleeve of the control arm and the sub-frame.
   (Tighten: Rear rubber sleeve control arm to sub-frame bolt to 180 ± 10 N·m)

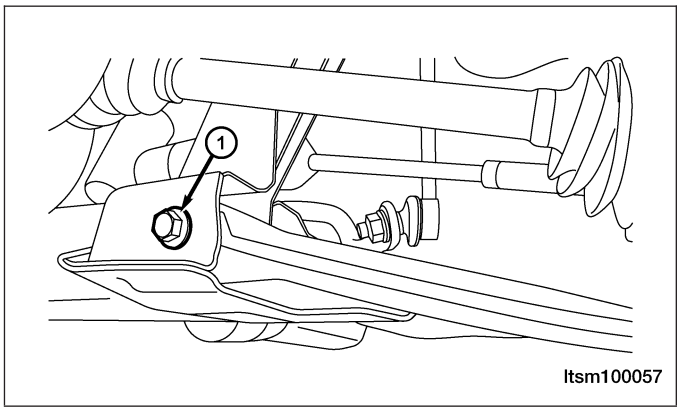

6. Remove the control arm from the vehicle.
7. Perform the following inspection procedure before installation.

Downloaded from www.Manualslib.com manuals search engine

Inspection

Lower control arm inspection:

a. Check for smooth rotation.
b. Inspect ball stud for damage.
c. Inspect dust cover for damage or oil leak.
d. Inspect for play in the ball joint, if defective, replace the ball joint.

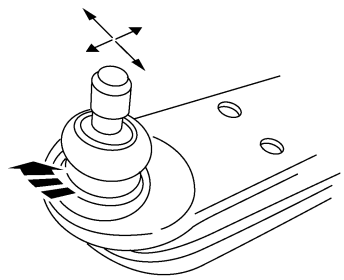

pzsm100031

8. Installation is in the reverse order of removal.

Installation Notes:

- After installation, each bolt must be tightened to the required tightening torque.

Front Stabilizer Bar Link

Removal & Installation

1. Raise and support the vehicle.
2. Remove the wheel mounting nuts and the wheel assembly. (Tighten: Wheel mounting nuts to 110 N·m)
3. Remove the nut (1) between the front stabilizer link and the mounting bracket on the front strut. (Tighten: Front stabilizer link and the mounting bracket nut to 48 ± 6 N·m)

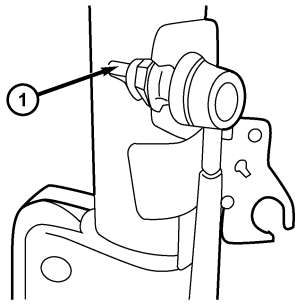

ltsm100010

4. Remove the nut (1) between the front stabilizer bar link and the front stabilizer bar. (Tighten: Front stabilizer link and the front stabilizer bar nut to 48 ± 6 N·m)

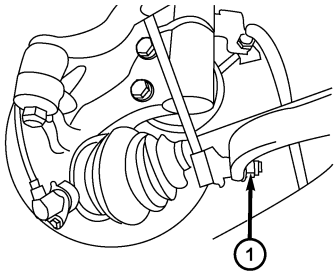

ltsm100046

5. Installation is in the reverse order of removal.

Downloaded from www.Manualslib.com manuals search engine

Installation Notes:

- After installation, each bolt must be tightened to the required tightening torque.

Front Stabilizer Bar

Removal & Installation

1. Raise and support the vehicle.
2. Remove the wheel mounting nuts and the wheel assembly.
   (Tighten: Wheel mounting nuts to 110 N·m)
3. Remove the front stabilizer bar link (See Front Stabilizer Bar Link Removal & Installation in Section 10 Suspension).
4. Remove the stabilizer bar mounting bolts (1) (4 total).
   (Tighten: Stabilizer bar mounting bolts to 19-24N·m)

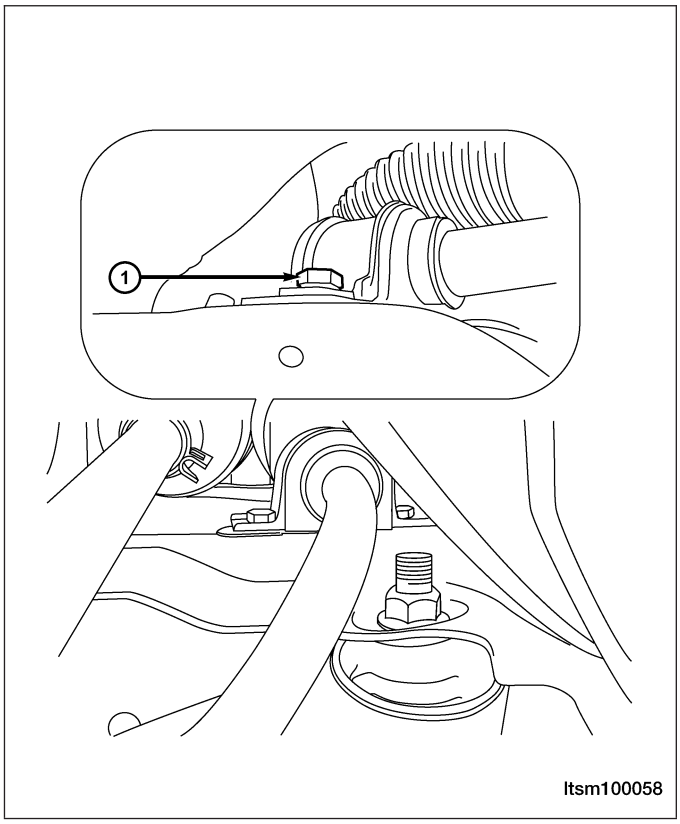

5. Remove the front stabilizer bar mounting brackets and the rubber bushings.
6. Remove the front stabilizer bar.
7. Installation is in the reverse order of removal.

Installation Notes:

- After installation, each bolt must be tightened to the required tightening torque.

Downloaded from www.Manualslib.com manuals search engine

Front Strut Assembly

Description

A MacPherson type strut assembly is used in place of the traditional front suspension upper control arm and upper ball joint. The bottom of the strut mounts directly to the steering knuckle using two attaching bolts and nuts going through the strut clevis bracket and steering knuckle. The top of the strut mounts directly to the strut tower of the vehicle using the three threaded studs on the strut assembly's upper mount.

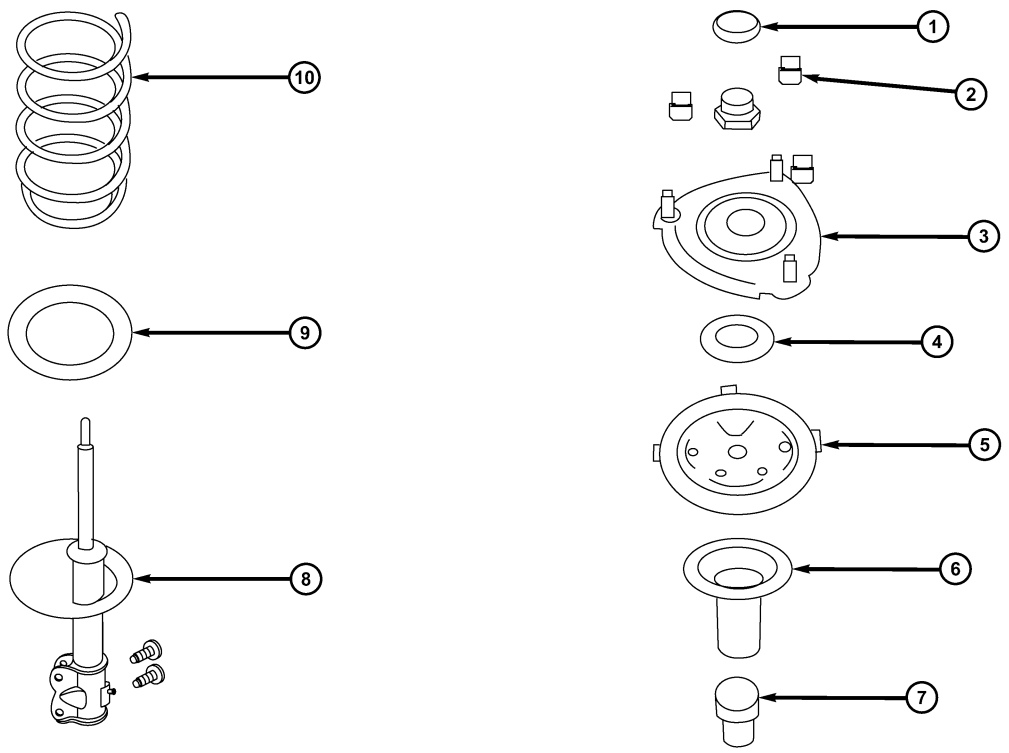

ltsm100009

1 - Strut Cover	6 - Dust Cover
2 - Nut	7 - Cushion Block
3 - Upper Strut Mount	8 - Shock Absorber Assembly
4 - Bearing Gasket	9 - Lower Rubber Ring
5 - Spring Upper Tray	10 - Coil Spring

Downloaded from www.Manualslib.com manuals search engine

Operation

The strut assembly cushions the ride of the vehicle, controlling vibration, jounce and rebound of the suspension. The coil spring controls ride quality and maintains proper ride height. The spring isolators isolate the coil spring at the top and bottom from coming into metal-to-metal contact with the upper mounting seat and the strut. The strut dampens jounce and rebound motions of the coil spring and suspension.

Diagnosis & Testing

Before removing the front strut, perform the following to test the front strut functionality:

- Adjust the tire pressure to all tires to proper specifications.
- Push and shake the front of the vehicle three or four times with identical force every time
- During the pushing and recoiling, the resistance and recoil times of the vehicle should be equal.
- If the strut (shock absorber) functions properly, the vehicle will recoil several times and then stop recoiling after the pushing force is removed.

Removal & Installation

1. Raise and support the vehicle.
2. Remove the wheel mounting nuts and the wheel assembly.
   (Tighten: Wheel mounting nuts to 110 N·m)
3. Disconnect the brake fluid hose clamp (1) from the brake fluid hose bracket on the front strut.
4. Remove the brake fluid hose from the bracket.

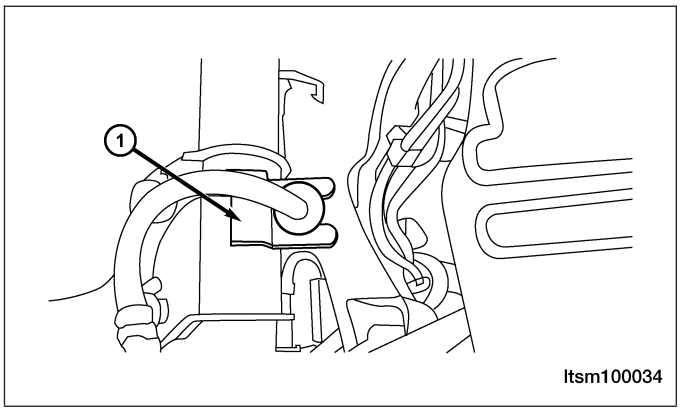

5. Remove the wheel speed sensor wire.
6. Remove the nut (1) from the front stabilizer bar link bracket on the front strut.
   (Tighten: Front stabilizer bar link bracket nut to 48 ± 6 N·m)

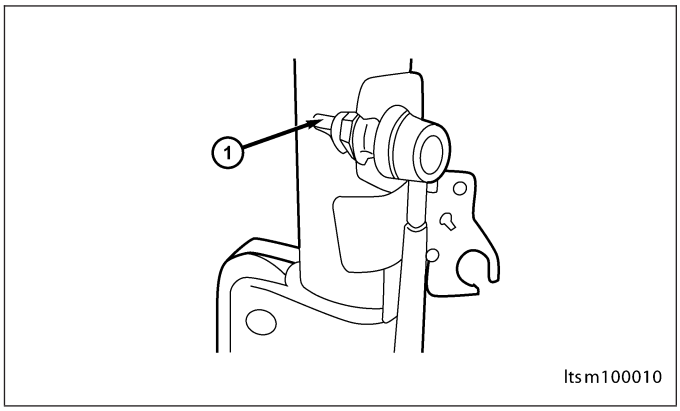

Downloaded from www.Manualslib.com manuals search engine

7. Remove the two bolts (1) between the front strut and the steering knuckle.
   (Tighten: Front strut to steering knuckle bolts to 120 ± 10 N·m)

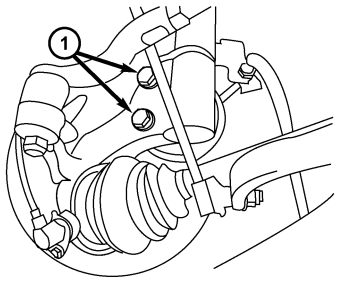

ltsm100041

8. Remove the three upper strut mounting nuts (1) from the strut tower.
   (Tighten: Upper strut mounting nuts to 50 ± 10 N·m)

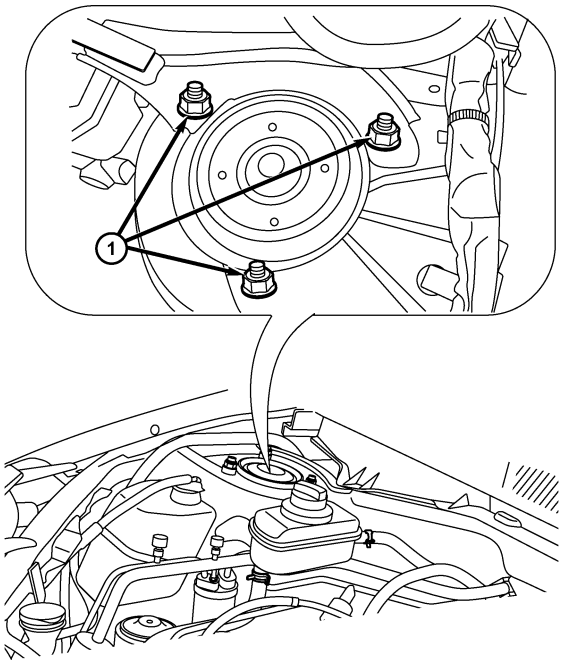

ltsm100002

9. Remove the front strut assembly.
10. Installation is in the reverse order of removal.

Installation Notes:

- After installation, each bolt must be tightened to the required tightening torque.
- Four-wheel alignment inspection is required after the installation.

Downloaded from www.Manualslib.com manuals search engine

Front Coil Spring

Description

A coil-over front strut assembly supports each front coil spring. The top of the strut assembly mounts to the strut tower.

Operation

Coil springs are designed to store energy and subsequently release it and to absorb shock and maintain a force between contacting surfaces. Coil springs are rated for specific vehicle applications.

NOTE :
Each component is serviced by removing the strut assembly from the vehicle and disassembling it. Coil springs are rated separately for each corner or side of the vehicle depending on optional equipment and type of vehicle service. If a coil spring requires replacement, be sure that it is replaced with a spring meeting the correct load rating for the vehicle and its specific options.

Removal & Installation

CAUTION:
At no time when servicing a vehicle can a sheet metal screw, bolt or other metal fastener be installed into the strut tower to take the place of an original plastic clamp. Also, do not drill holes into the front strut tower for the installation of any metal fasteners into the strut tower area indicated.

1. Raise and support the vehicle.
2. Remove the front strut assembly (See Front Strut Removal & Installation in Section 10 Suspension).

WARNING!

Do not remove the strut rod nut before the coil spring is properly compressed. The coil spring is held under pressure. The coil spring must be compressed, removing spring tension from the upper mount and bearing, before the strut rod nut is removed.

3. Position the strut assembly in the strut coil spring compressor following the manufacturer's instructions and set the lower and upper hooks of the compressor on the coil spring.
4. Compress the coil spring until all coil spring tension is removed from the upper mount and bearing.

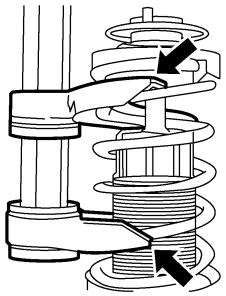

ltsm100014

5. Once the spring is sufficiently compressed, install the strut nut wrench on the strut rod nut.
6. Install a deep socket on the end of the strut rod.

Downloaded from www.Manualslib.com manuals search engine

7. While holding the strut rod, remove the nut using the strut nut wrench.
   (Tighten: Strut rod nut to 100 - 120 N·m)

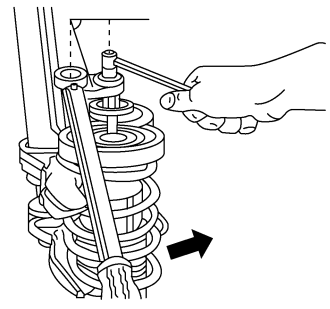

8. Remove the lower spring isolator from the strut seat.
9. Remove the dust shield and jounce bumper.
10. Remove the upper mounting bracket.
11. Remove the upper spring seat and isolator.
12. Release the tension from the coil spring by backing off the compressor drive completely. Release the compressor hooks and remove the coil spring.
13. Assembly is in the reverse order of disassembly.

Front Sub-Frame Assembly

Removal & Installation

WARNING!

Before removing the sub-frame assembly, properly support the engine and transaxle assembly.

1. Raise and support the vehicle.
2. Remove the wheel mounting nuts and the wheel assembly.
   (Tighten: Wheel mounting nuts to 110 N·m)
3. Support the engine using an engine support fixture or suitable jack.
4. Remove the engine undercover and splash shields.
5. Remove the intermediate shaft lock bolt (1) that connects to the steering gear.
   (Tighten: Intermediate shaft lock nut to 25 - 30 N·m)

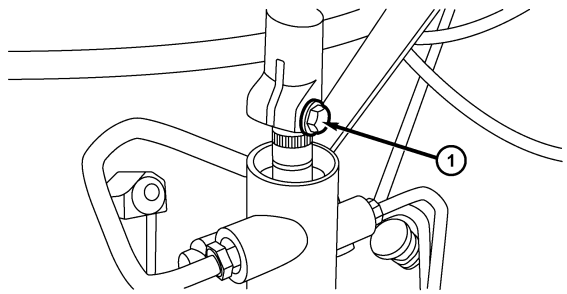

Downloaded from www.Manualslib.com manuals search engine

6. Remove the nut (1) between the control arm and the steering knuckle.
   (Tighten: Control arm to steering knuckle nut to 120 ± 10 N·m)

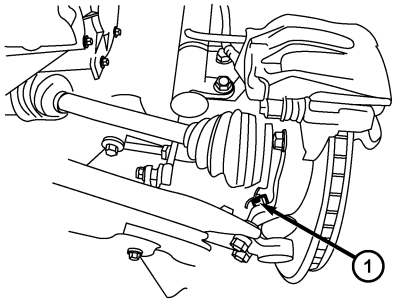

ltsm100006

7. Remove the wheel speed sensor mounting bolt (1).
   (Tighten: Wheel speed sensor mounting bolt to 10 ± 1 N·m)
8. Remove the wheel speed sensor and set it aside.

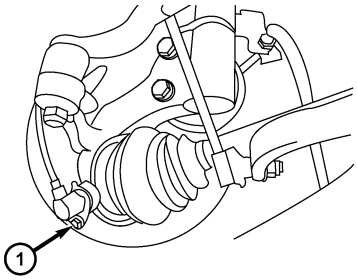

ltsm100045

9. Remove the left and right front stabilizer bar links (See Front Stabilizer Bar Link Removal & Installation in Section 10 Suspension).
10. Remove the nut (1) attaching the outer tie rod ends to the steering knuckle on each side of the steering rack.
    (Tighten: Outer tie rod end nut to 35 N·m)

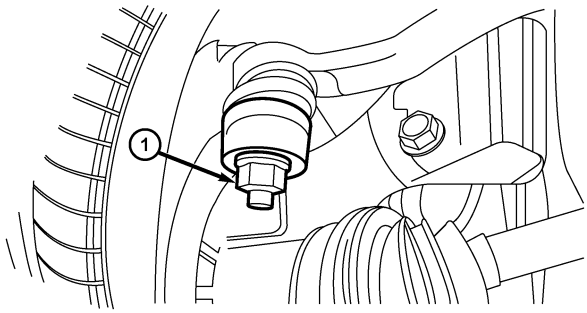

ltsm110034

11. Remove the exhaust pipe assembly mounting bolts (1).
    (Tighten: Exhaust pipe assembly mounting bolts to 25 ± 3 N·m)

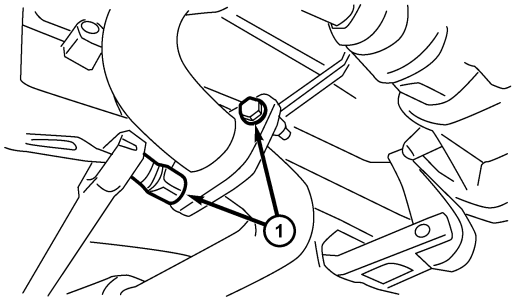

vism110016

Downloaded from www.Manualslib.com manuals search engine

12. Remove the exhaust pipe assembly (See Exhaust Pipe Removal & Installation in Section 07 Exhaust).
13. Remove the high pressure and low pressure lines (1) from the steering gear (drain steering fluid from lines).
    (Tighten: High pressure line to power steering pump 27 - 33 N·m)
    (Tighten: Low pressure line to power steering pump 27 - 33 N·m)

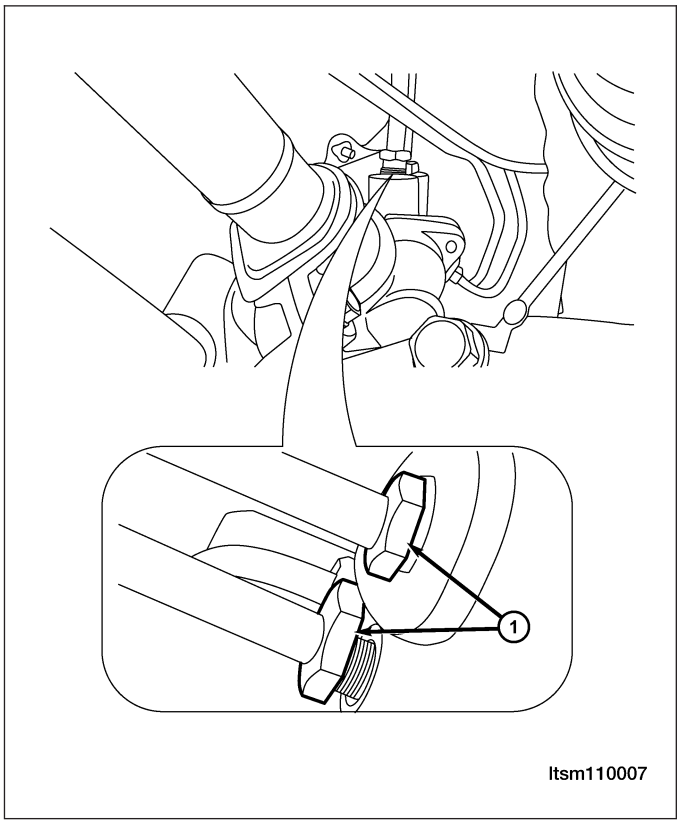

14. Remove the two bolts (1) between the steering gearing and the sub-frame.
    (Tighten: Steering gear to sub-frame bolts to 70 - 80 N·m)

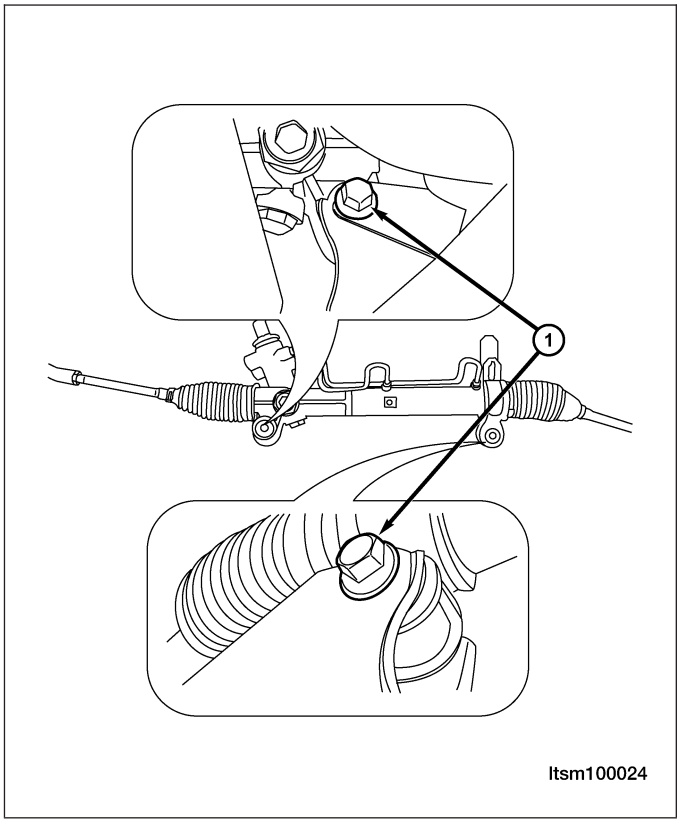

Downloaded from www.Manualslib.com manuals search engine

15. Remove the bolts (1) and nut (2) between the sub-frame assembly and side member assembly.
(Tighten: Sub-frame assembly retaining bolts to 120 ± 5 N·m)

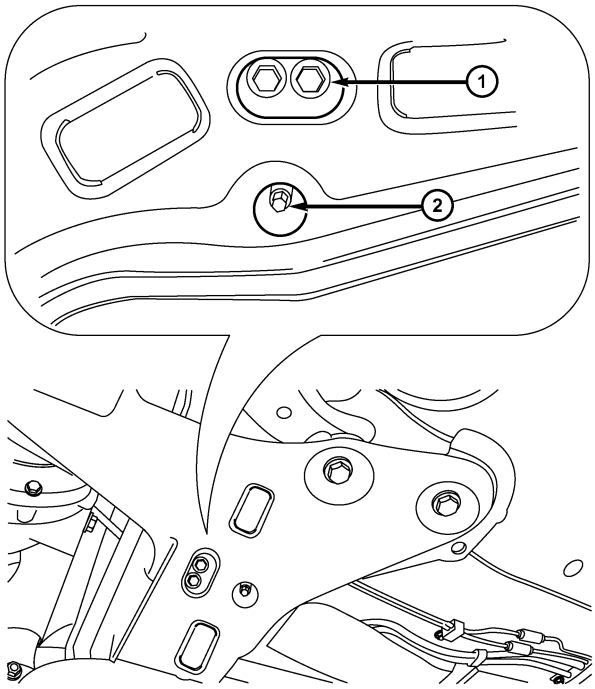

ltsm100056

16. Remove the bolts between the radiator lower seat and side member assembly, then remove the side member assembly.
17. Remove the front engine mount and rear engine mount (See Engine Mounts Removal & Installation in Section 02 Engine).
18. Remove the bolts (1) between the sub-frame assembly and the vehicle body.
(Tighten: Sub-frame assembly to vehicle body bolts to 180 ± 15 N·m)

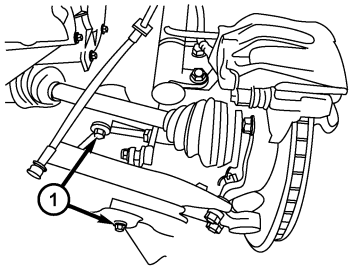

ltsm100044

19. Remove the sub-frame assembly.
20. Separate the front lower control arm and the front stabilizer bar from the sub-frame assembly.
21. Installation is in the reverse order of removal.

Downloaded from www.Manualslib.com manuals search engine

UNIT REPAIR

Front Strut

Disassemble

NOTE :
The strut assembly must be removed from the vehicle for it to be disassembled and assembled. For the disassembly and assembly of the strut assembly, use a strut spring compressor, or the equivalent, to compress the coil spring. Follow the manufacturer's instructions closely.

1. Remove the front strut assembly (See Front Strut Removal & Installation in Section 10 Suspension).
2. If both struts are being serviced at the same time, mark both the coil springs and strut assemblies according to which side of the vehicle the strut is being removed from.

WARNING!

Do not remove the strut rod nut before the coil spring is properly compressed. The coil spring is held under pressure. The coil spring must be compressed, removing spring tension from the upper mount and bearing, before the strut rod nut is removed.

3. If the spring compressor fixture is unable to attach to a workbench, attach the spring compressor to a bench vise.

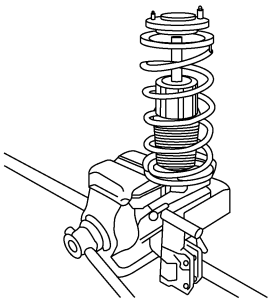

ltsm100013

4. Position the strut assembly in the strut coil spring compressor following the manufacturer's instructions and set the lower and upper hooks of the compressor on the coil spring.
5. Loosen the spring compressor, then attach the clamps between the top and bottom of the spring.

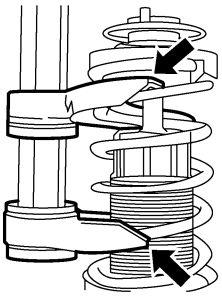

ltsm100014

6. Compress the coil spring until all coil spring tension is removed from the upper mount and bearing.

CAUTION:
Never use impact or high speed tools to remove the strut rod nut. Damage to the strut internal bearings can occur.

Downloaded from www.Manualslib.com manuals search engine

7. Once the spring is sufficiently compressed, install the strut nut wrench on the strut rod nut.
8. Install a deep socket on the end of the strut rod. While holding the strut rod, remove the nut using the strut nut wrench.
   (Tighten: Strut rod nut to 100 - 120 N·m)

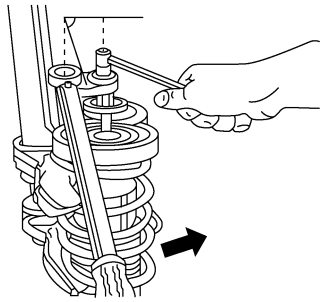

ltsm100015

9. Remove the lower spring isolator from the strut seat.
10. Remove the dust shield and jounce bumper.
11. Remove the upper mounting bracket.
12. Remove the upper spring seat and isolator.
13. Release the tension from the coil spring by backing off the compressor drive completely. Release the compressor hooks and remove the coil spring.

Inspection

Inspect the strut assembly for damage and evidence of fluid running from the upper end of the fluid reservoir (actual leakage will be a stream of fluid running down the side of the reservoir tube and dripping off lower end of unit).

Inspect the strut assembly components for the following and replace as necessary:

- Inspect the strut (damper) for shaft binding over the full stroke of the shaft.
- Inspect the jounce bumper for cracks and signs of deterioration.
- Inspect the dust shield for cracks and tears.
- Check the upper mount for cracks and distortion and its retaining studs for any sign of damage.
- Check the bearing and upper spring seat for any binding.
- Inspect the upper and lower spring isolators for material deterioration and distortion.
- Inspect the coil spring for any sign of damage to the coating.

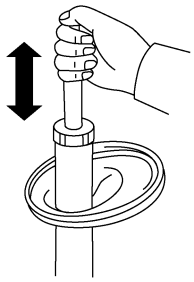

ltsm100011

Strut Disposal Procedure

NOTE :

Follow the procedure below to properly dispose of the strut assembly.

- Pull the strut rod to extend the strut rod out as far as possible.

Downloaded from www.Manualslib.com manuals search engine

- Drill a hole to discharge the gas (fluid) in the strut assembly cylinder (Drill a hole in the cylinder body according to the figure to discharge the gas).

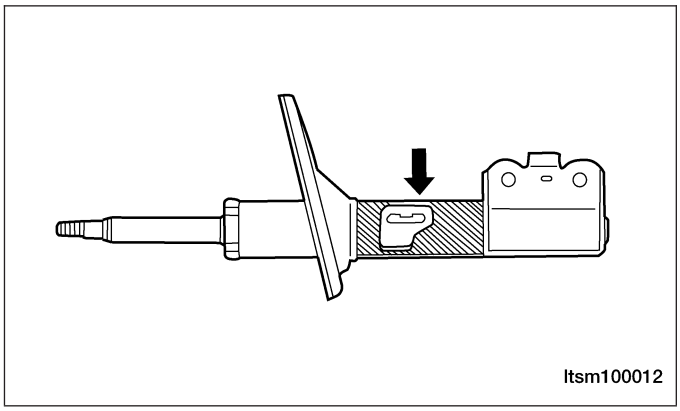

Assembly

1. Replace all necessary parts prior to reassembly:
   1. Cushion Pad
   2. Dust Boot
   3. Cushion Block
   4. Upper Spring Seat
   5. Upper Spring Mount

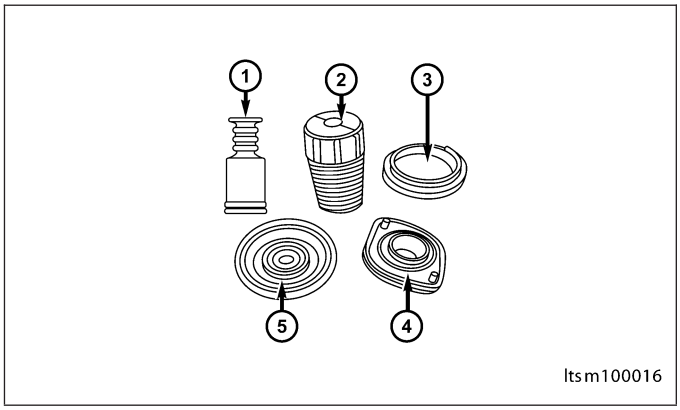

2. Mount the new strut assembly into the fixture.

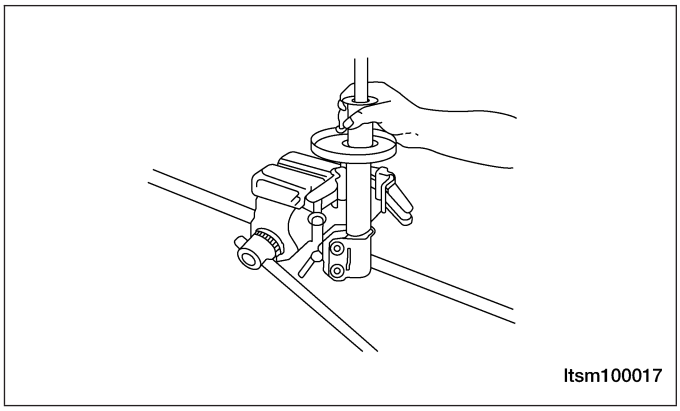

3. Insert the coil spring into the spring compressor.
4. Compress the coil spring to a distance of ≤120 mm between the two clamps.

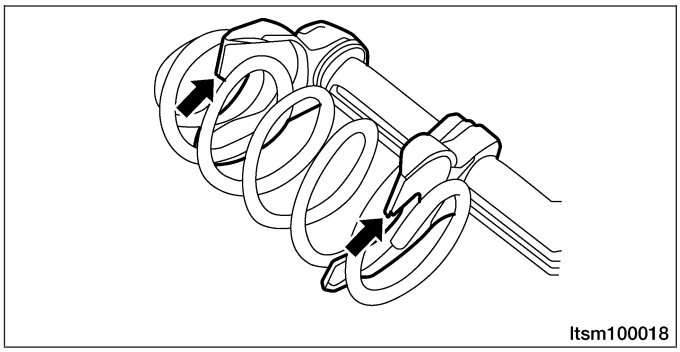

Downloaded from www.Manualslib.com manuals search engine

5. Ensure the cushion stopper mark (1) is in line with the mark on the strut.

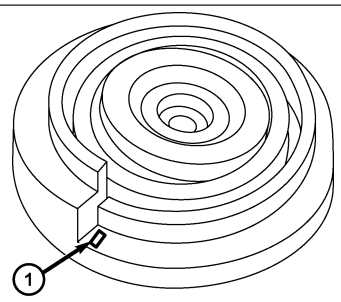

ltsm100019

6. Install the cushion block and pull the piston rod to the bottom.
7. Align the coil spring on the bottom spring holder (1) (the end of the spring should be indexed in the spring pocket).

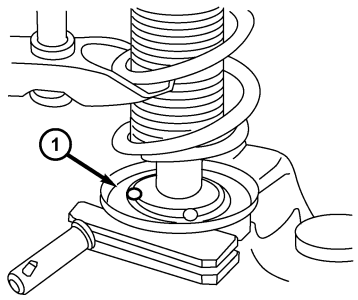

ltsm100020

8. Install the upper spring holder with the index position of 180° angle between the punched hole and the spring strut mounting position (1).

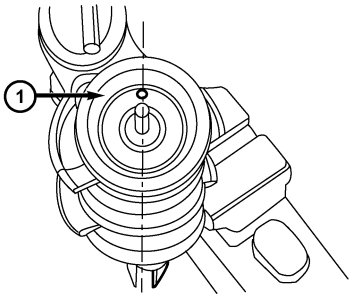

ltsm100021

9. Install the upper spacer and bearing.
10. Install the strut rod nut to the strut rod.

Downloaded from www.Manualslib.com manuals search engine

REAR SUSPENSION

GENERAL INFORMATION 10-26
Description 10-26
Operation 10-27
Specifications 10-28

DIAGNOSIS & TESTING 10-29
Vehicle Inspection 10-29
Vibration At High Speed 10-29

ON-VEHICLE SERVICE 10-30

Rear Lower Control Arm 10-30
Removal & Installation 10-30

Rear Upper Control Arm 10-31
Removal & Installation 10-31

Rear Stabilizer Bar Link 10-32
Removal & Installation 10-32

Rear Shock Absorber 10-32
Description 10-32
Operation 10-32
Removal & Installation 10-32
Rear Shock Absorber Inspection 10-33

Rear Coil Spring 10-33
Description 10-33
Operation 10-34
Removal & Installation 10-34

Rear Trailing Arm Assembly 10-35
Removal & Installation 10-35

Downloaded from www.Manualslib.com manuals search engine

Description

The rear suspension consists of the following components:

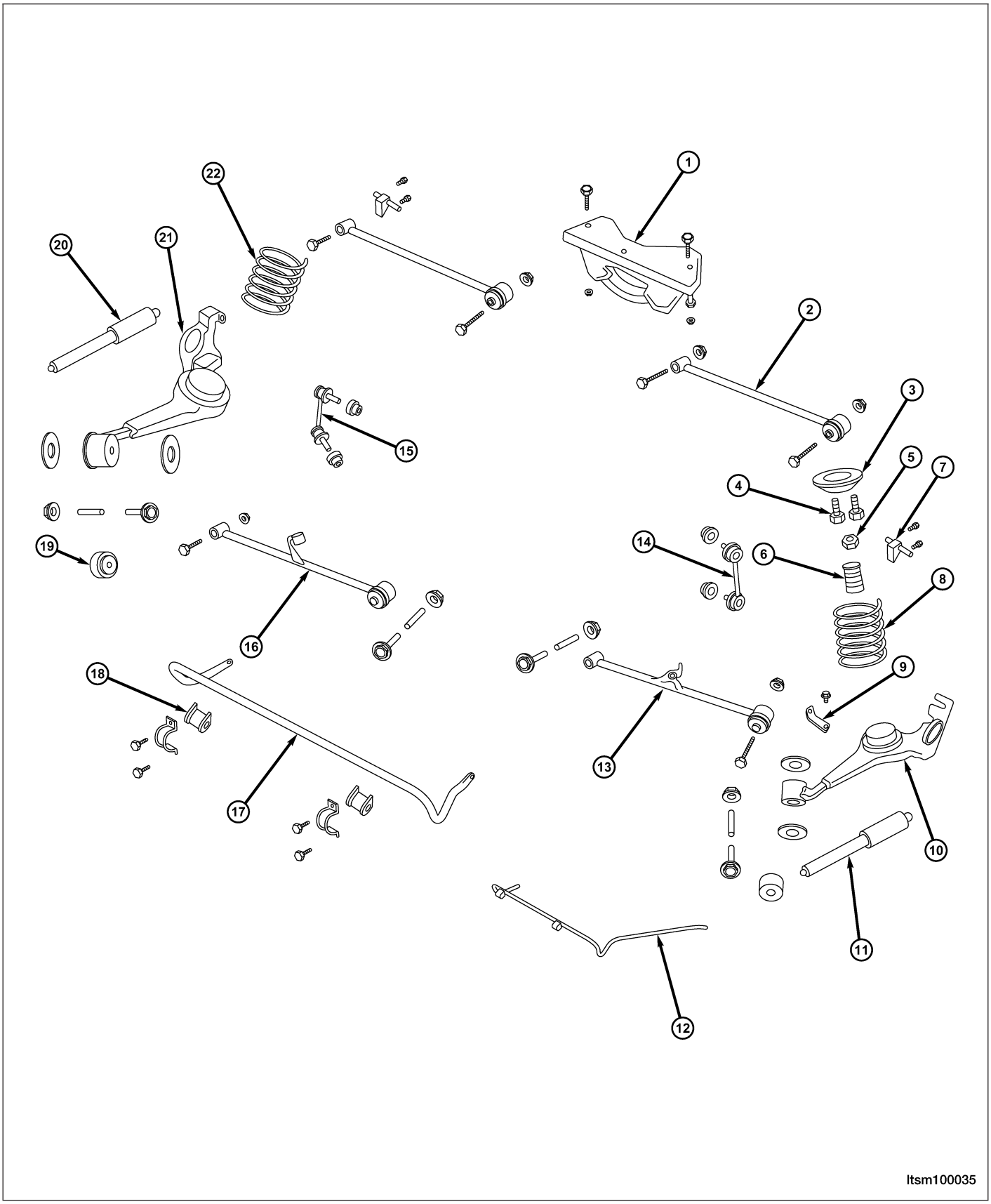

Downloaded from www.Manualslib.com manuals search engine

1 - Rear Sub-Frame Assembly	12 - Rear Stabilizer Lever Assembly
2 - Rear Suspension Upper Rocker Arm Assembly	13 - Rear Suspension Left Lower Rocker Arm Assembly
3 - Rear Spring Pad	14 - Left Rear Stabilizer Bar Link
4 - Bolt	15 - Right Rear Stabilizer Bar Link
5 - Nut	16 - Rear Suspension Right Lower Rocker Arm Assembly
6 - Washer	17 - Rear Stabilizer Bar
7 - Left Brake Line Bracket	18 - Rubber Support
8 - Rear Coil Spring	19 - Rubber Bushing Assembly
9 - Left Brake Line Support	20 - Right Rear Strut Assembly
10 - Left Rear Trailing Arm Assembly	21 - Right Rear Trailing Arm Assembly
11 - Left Rear Strut Assembly	22 - Rear Coil Spring

WARNING!

Only frame contact or wheel lift hoisting equipment can be used on this vehicle. It cannot be hoisted using equipment designed to lift a vehicle by the rear axle. If this type of hoisting equipment is used, damage to rear suspension components will occur.

CAUTION:

If a rear suspension component becomes bent, damaged or fails, no attempt should be made to straighten or repair it. Always replace it with a new component.

Operation

The rear suspension utilizes an independent multi-link arm design. This suspension system allows the wheels to react to road imperfections independent of each other. This independent action offers improved isolation from the effects of jounce and rebound.

Downloaded from www.Manualslib.com manuals search engine

Specifications

Torque Specifications

DESCRIPTION	TORQUE (N·m)
Rear Stabilizer Bar Link	40 - 50
Lower Suspension Lever	40 - 50
Rear Shock Absorber to Rear Shock Absorber Mounting Bracket	40 - 50
Control Arm Knuckle Pin to Control Arm	140 - 160
Rear Axle Front Suspension to Rear Sub-Frame	115 - 125
Rear Axle Front Suspension to Rear Driving Axle	75 - 85
Control Arm And Sub-Frame	170 - 190
Rear Rubber Buffer Assembly to Vehicle Body	22 - 28
Rear Axle Rear Suspension Cushion Assembly to Rear Axle	75 - 85
Upper Link to Rear Sub-Frame	100 - 120
Lower Control Arm to Rear Sub-Frame	100 - 120
Lower Control Arm to Trailing Arm	100 - 120
Upper Link to Trailing Arm	100 - 120
Rear Suspension to Bracket	115 - 125
Rear Suspension, Longitudinal Beam Of Engine And Sub-Frame	75 - 85
Rear Stabilizer Bar Clamp to Vehicle Body	22 - 28
Rear Trailing Arm to Vehicle Body	140 - 160
Soft Gasket And Bracket Of Rear Suspension	110 - 130
Sub-Frame And Gasket Of Vehicle (Rear) Body	170 - 190
Sub-Frame And Longitudinal Beam Assembly	75 - 85
Upper End Of Rear Shock Absorber to Vehicle Body	22 - 28
Wheel Mounting Nut	110

Downloaded from www.Manualslib.com manuals search engine

DIAGNOSIS & TESTING

Vehicle Inspection

Inspect the rear axle for the following:
- Check the rear axle for loose bearings.
- Check the rear axle hub for any damage or excessive runout.

Vibration At High Speed

This problem could be a result of the following:
- Foreign material (mud, etc.) packed on the backside of the wheel(s).
- Out of balance tires or wheels.
- Improper tire or wheel runout.

Downloaded from www.Manualslib.com manuals search engine

Rear Lower Control Arm

Removal & Installation

1. Raise and support the vehicle.
2. Remove the bolt that joins rear stabilizer bar and rear suspension lower control arm (See Rear Stabilizer Bar Link Removal & Installation in Section 10 Suspension).
3. Remove the retaining bolt (1) connecting the lower control arm and rear trailing arm.
   (Tighten: Lower control arm to rear trailing arm bolt to 80 - 100 N·m)

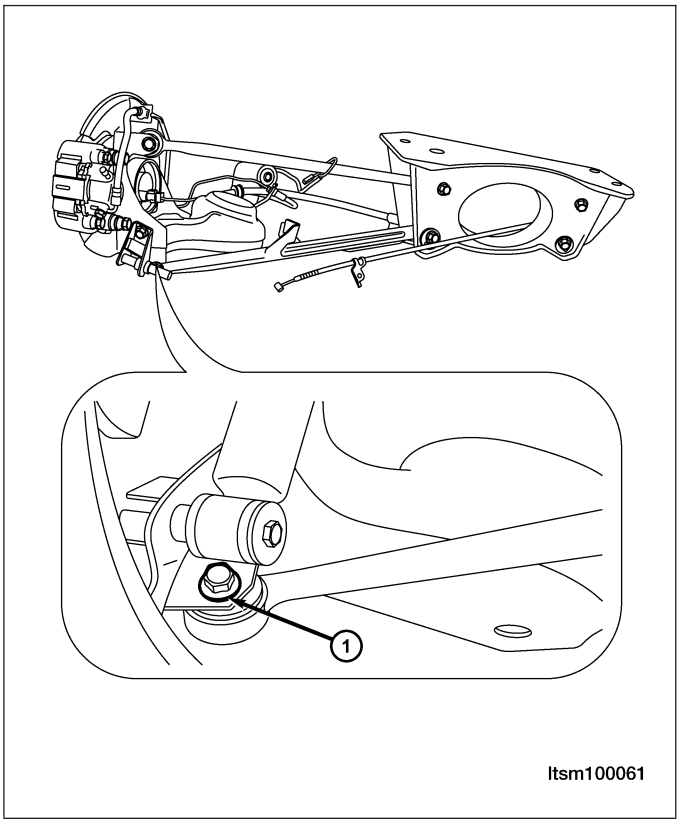

4. Remove the retaining bolt (1) connecting the upper control arm and rear sub-frame assembly.
   (Tighten: Upper control arm and rear sub-frame assembly bolt to 80 - 100 N·m)
5. Installation is in the reverse order of removal.

Installation Notes:

- After installation, each bolt must be tightened to the required tightening torque.

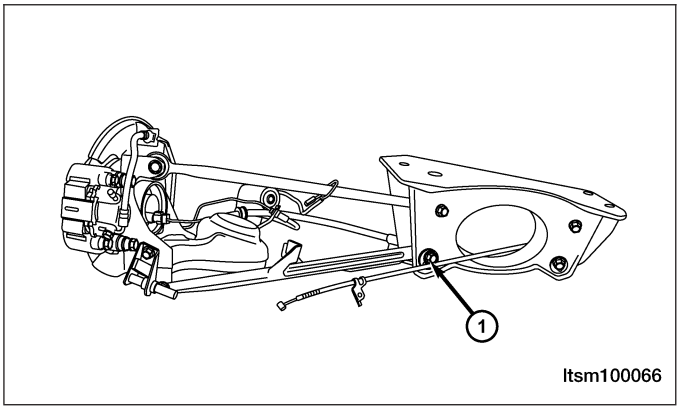

Downloaded from www.Manualslib.com manuals search engine

Rear Upper Control Arm

Removal & Installation

1. Raise and support the vehicle.
2. Remove the retaining bolt (1) connecting the upper control arm and rear trailing arm.
   (Tighten: Upper control arm to rear trailing arm bolt to 80 - 100 N·m)

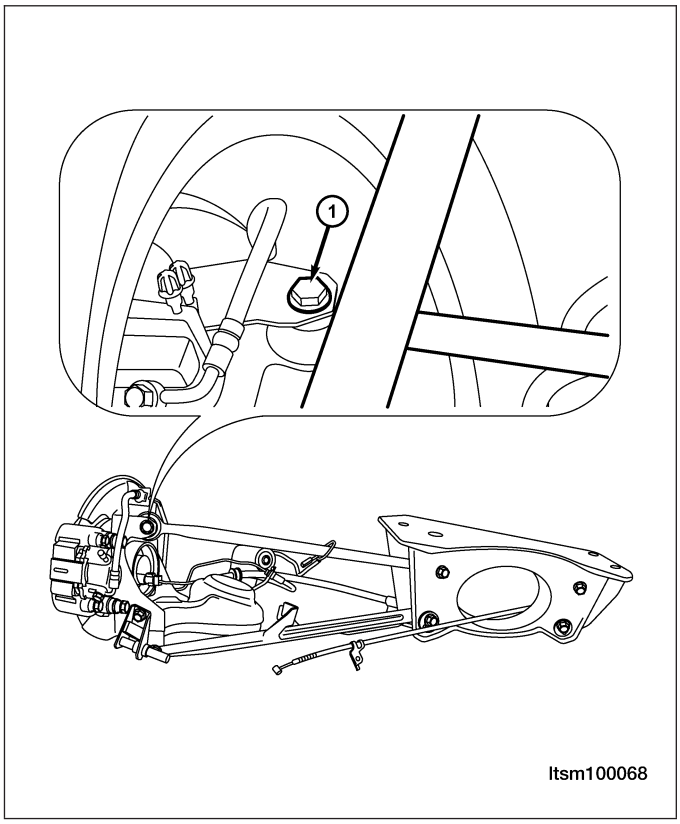

3. Remove the retaining bolt (1) connecting the upper control arm and rear sub-frame assembly.
   (Tighten: Upper control arm to rear sub-frame assembly bolt to 80 - 100 N·m)
4. Installation is in the reverse order of removal.

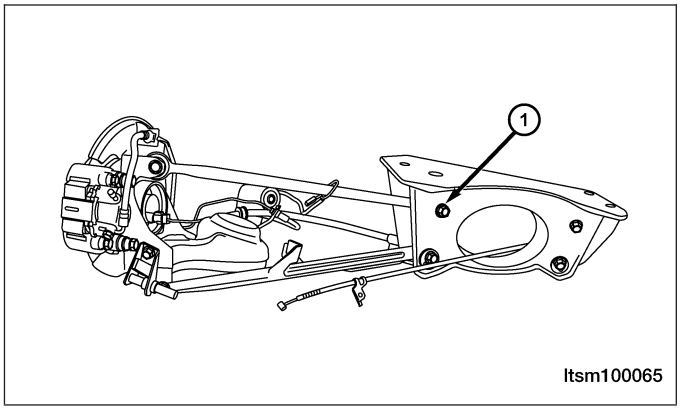

Installation Notes:

- After installation, each bolt must be tightened to the required tightening torque.

Downloaded from www.Manualslib.com manuals search engine

Rear Stabilizer Bar Link

Removal & Installation

1. Raise and support the vehicle.
2. Remove the nuts (1) connecting the rear stabilizer bar link to the rear suspension lower control arm. (Tighten: Rear stabilizer bar link to rear suspension lower control arm nuts to 48 ± 6 N·m)

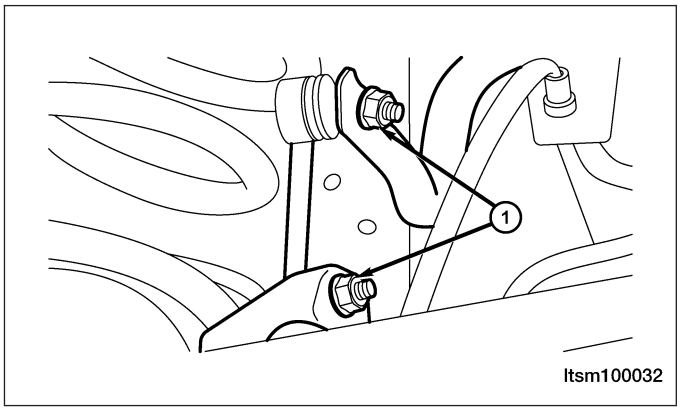

3. Remove the connecting bolt from the rear stabilizer bar link to the rear stabilizer bar.
4. Installation is in the reverse order of removal.

Installation Notes:

- After installation, each bolt must be tightened to the required tightening torque.

Rear Shock Absorber

Description

The bottom of the shock absorber assembly mounts to the rear trailing arm. The top of the shock absorber assembly mounts to the body.

Operation

The shock absorber assembly cushions the ride of the vehicle, controls vibration, jounce and rebound of the suspension. The shock absorber dampens jounce and rebound motions of the coil spring and suspension.

Removal & Installation

1. Remove the protective cover of the rear shock absorber on the C pillar lower trim panel in the luggage compartment.

Downloaded from www.Manualslib.com manuals search engine

2. Remove the nut (1) connecting the rear shock absorber to the vehicle body.
   (Tighten: Rear shock absorber to the vehicle body nut to 48 ± 6 N·m)

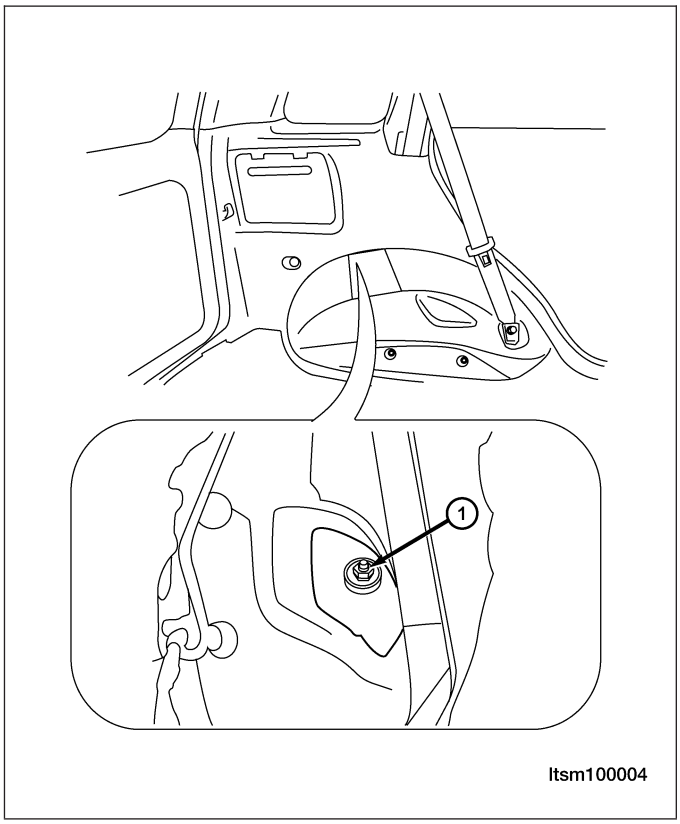

3. Raise and support the vehicle.
4. Remove the bolt (1) connecting the rear shock absorber to the rear trailing arm.

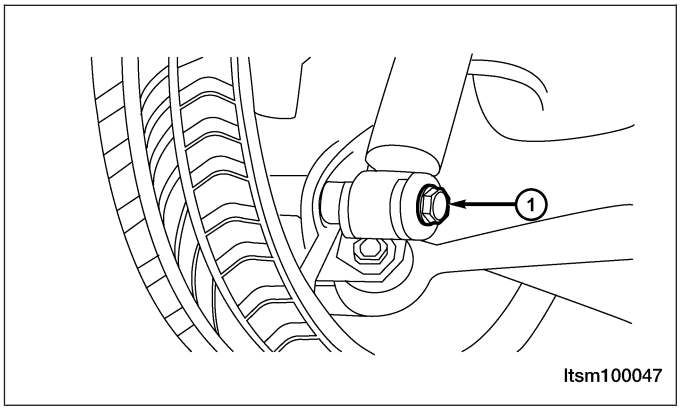

5. Remove the rear shock absorber.
6. Installation is in the reverse order of removal.

Rear Shock Absorber Inspection

1. Inspect the shock absorber for any fluid leaks, replace if necessary.
2. Inspect the damping force of the shock absorber, replace if not within specifications.
3. Inspect the thrust bearing to see if there is any excessive wear or abnormal noise, replace any worn parts.
4. Inspect the lower spring seat for cracks or deformation replace any worn parts.
5. Inspect limit stop for damage, replace any worn parts.
6. Inspect the stop pad for wear, cracks and deformation, replace any worn parts.

Rear Coil Spring

Description

The rear coil spring is located between the vehicle body and the rear trailing arm assembly.

Downloaded from www.Manualslib.com manuals search engine

Operation

Coil springs are designed to store energy and subsequently release it, and to absorb shock and maintain a force between contacting surfaces. Coil springs are rated for specific vehicle applications.

Removal & Installation

1. Raise and support the vehicle.
2. Remove the wheel mounting nuts and the wheel assembly.
   (Tighten: Wheel mounting nuts to 110 N·m)
3. Use a jack to support the rear trailing arm.
4. Remove the retaining bolt (1) that connects the lower control arm to rear trailing arm.
   (Tighten: Lower control arm to rear trailing arm bolt to 80-100 N·m)

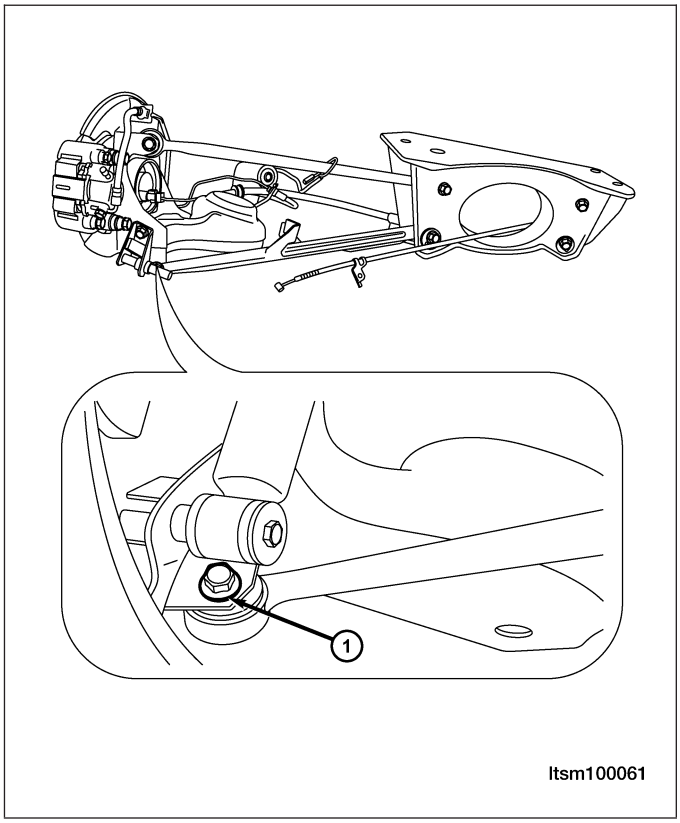

5. Remove the bolt (1) connecting the rear shock absorber to the rear trailing arm.

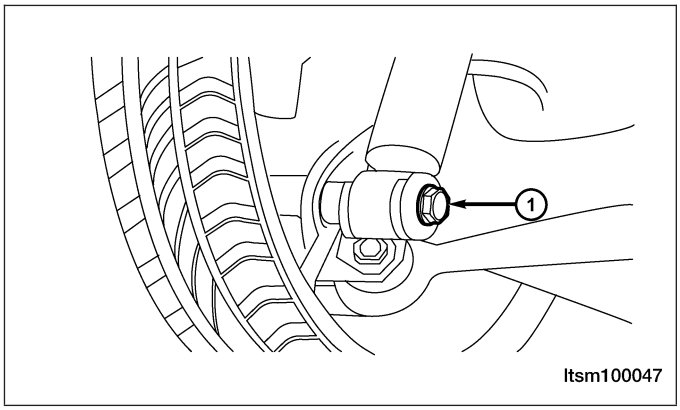

6. Release the jack slowly.
7. Remove the coil spring.
8. Installation is in the reverse order of removal.

Downloaded from www.Manualslib.com manuals search engine

Rear Trailing Arm Assembly

Removal & Installation

1. Raise and support the vehicle.
2. Remove the wheel mounting nuts and the wheel assembly. (Tighten: Wheel mounting nuts to 110 N·m)
3. Use a jack to support the rear trailing arm.
4. Remove the connecting bolts (1) that joins the rear trailing arm and the shock absorber bracket. (Tighten: Rear trailing arm to shock absorber bracket bolts to 80 - 100 N·m)

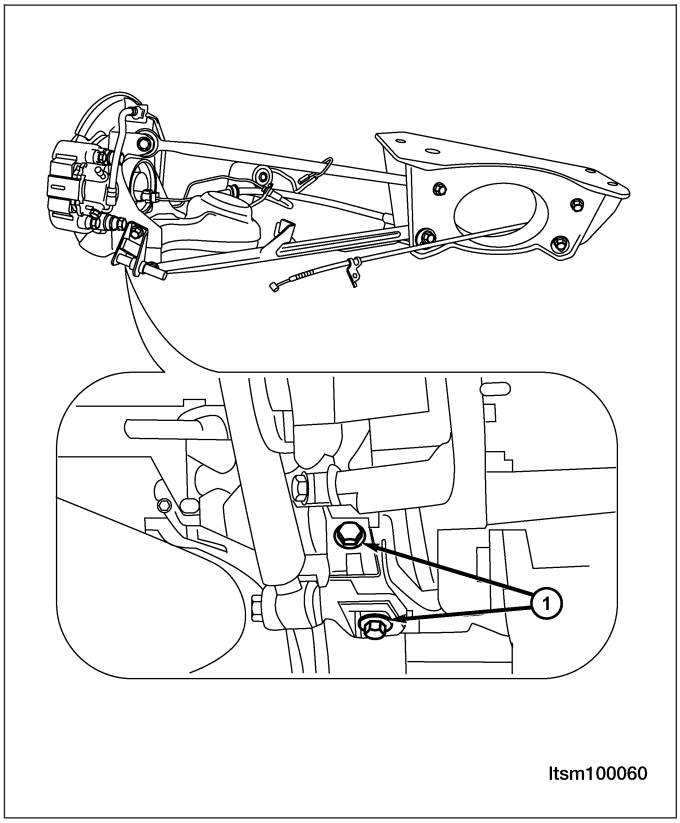

5. Lower the jack and remove the rear spring.
6. Remove the connecting bolt that joins the rear trailing arm to the upper control arm (See Rear Upper Control Arm Removal & installation in Section 10 Suspension).
7. Remove the connecting bolt that joins the rear trailing arm to the lower control arm (See Rear Lower Control Arm Removal & installation in Section 10 Suspension).

Downloaded from www.Manualslib.com manuals search engine

8. Remove the connecting bolt (1) that joins the rear trailing arm to the hand brake cable bracket. (Tighten: Hand brake cable bracket bolt to 25 - 35 N·m)

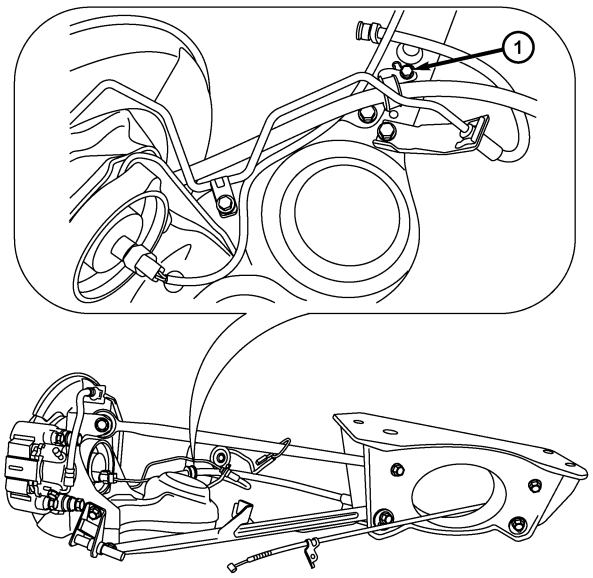

ltsm100059

9. Remove the bolt (1) that joins the rear trailing arm to the vehicle body.
10. Remove the brake fluid pipe clamp (2).

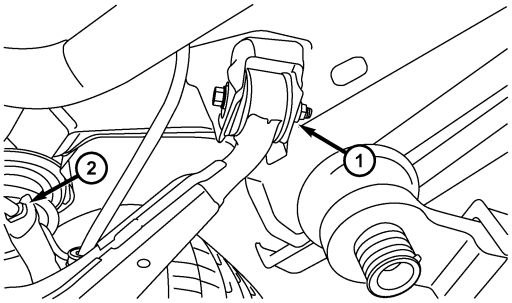

ltsm100054

Downloaded from www.Manualslib.com manuals search engine

11. Remove the brake fluid pipe clamp (1) and bracket bolts (2) on the trailing arm.

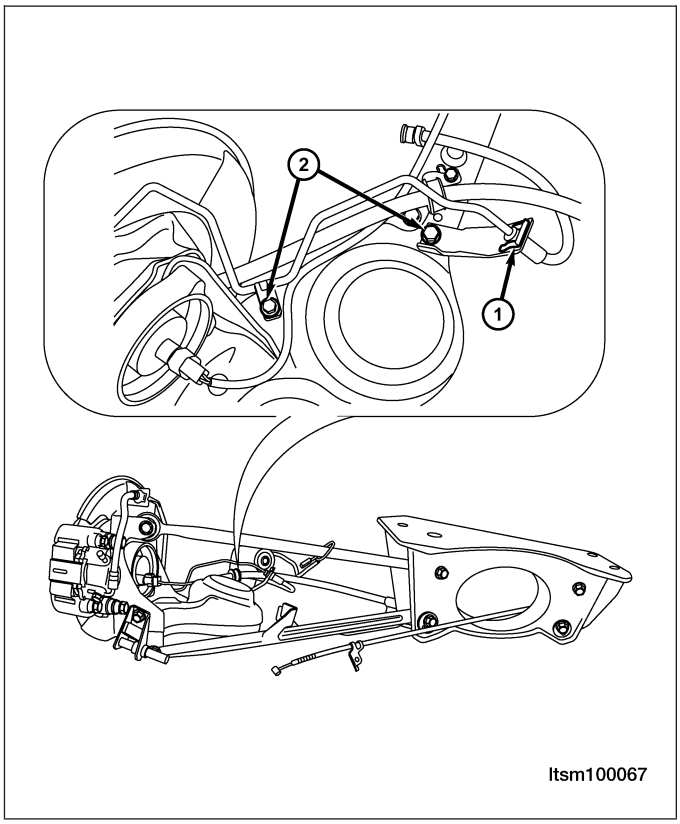

12. Remove the rear brake rotor (See Rear Brake Rotor Removal & Installation in Section 10 Brakes).
13. Remove the rear hub and bearing (See Rear Hub and Bearing Removal & Installation in Section 09 Driveline & Axle).
14. Remove the rear trailing arm.
15. Installation is in the reverse order of removal.

Installation Notes:

- After installation, each bolt must be tightened to the required tightening torque.

Downloaded from www.Manualslib.com manuals search engine

ALIGNMENT

GENERAL INFORMATION 10-39
- Description 10-39
- Operation 10-39
- Pre-Wheel Alignment Inspection 10-39
- Wheel Alignment Setup 10-40
- Specifications 10-40

DIAGNOSIS & TESTING 10-42
- Vehicle Inspection 10-42
- Tire Wear 10-42
- Tire Wear Chart 10-42
- Alignment Troubleshooting Chart 10-43

ON-VEHICLE SERVICE 10-44

Front Wheel Alignment 10-44
- Front Wheel Alignment Specifications 10-44
- Front Axle Toe-In Adjustment 10-44
- Front Camber Adjustment 10-44

Rear Wheel Alignment 10-45
- Rear Wheel Alignment Specifications 10-45
- Rear Axle Toe-In Adjustment 10-45
- Rear Camber Adjustment 10-46

Downloaded from www.Manualslib.com manuals search engine

GENERAL INFORMATION

Description

Vehicle wheel alignment is the positioning of all interrelated front and rear suspension angles. These angles affect the handling and steering of the vehicle when it is in motion. Proper wheel alignment is essential for efficient steering, good directional stability, and proper tire wear.

The method of checking a vehicle's front and rear wheel alignment varies depending on the manufacturer and type of equipment used. The manufacturer's instructions should always be followed to ensure accuracy of the alignment. On this vehicle, the suspension angles that can be adjusted are as follows:

Front Axle

- Camber
- Caster
- Toe-in

Rear Axle

- Camber
- Toe-in

Check the wheel alignment and make all wheel alignment adjustments with the vehicle standing at its proper curb height specification. Curb height is the normal riding height of the vehicle. It is measured from a certain point on the vehicle to the ground or a designated area while the vehicle is sitting on a flat, level surface.

Operation

Curb Height Measurement

The wheel alignment is to be checked and all alignment adjustments made with the vehicle at its required curb height specification.

- Vehicle height is to be checked with the vehicle on a flat, level surface, preferably a vehicle alignment rack.
- The tires are to be inflated to the recommended pressure.
- All tires are to be the same size as standard equipment.
- Vehicle height is checked with the fuel tank full of fuel, and no passenger or luggage compartment load.
- Vehicle height is not adjustable.
- If the measurement is not within specifications, inspect the vehicle for bent or weak suspension components.
- Compare the parts tag on the suspect coil spring(s) to the parts book and the vehicle sales code, checking for a match.
- Once removed from the vehicle, compare the coil spring height to a new or known good coil spring. The heights should vary if the suspect spring is weak.

NOTE :
Prior to reading the curb height measurement, the front and rear of the vehicle must be jounced to settle the suspension. Induce jounce by pushing down on the center of the bumper (fascia), using care not to damage the vehicle, moving the vehicle up and down, gradually increasing the suspension travel with each stroke. Release the bumper at the bottom of each stroke, repeating this action several times. Perform this to both front and rear suspensions an equal number of times.

Pre-Wheel Alignment Inspection

Before any attempt is made to change or correct the wheel alignment, the following inspection and necessary corrections must be made to the vehicle to ensure proper alignment.

1. Verify the fuel tank is full of fuel. If the fuel tank is not full, the reduction in weight will affect the curb height of the vehicle and the alignment specifications.
2. The passenger and luggage compartments of the vehicle should be free of any load that is not factory equipment.

Downloaded from www.Manualslib.com manuals search engine

3. Check the tires on the vehicle. The tires are to be inflated to the recommended air pressure. All tires must be the same size and in good condition with approximately the same tread wear.

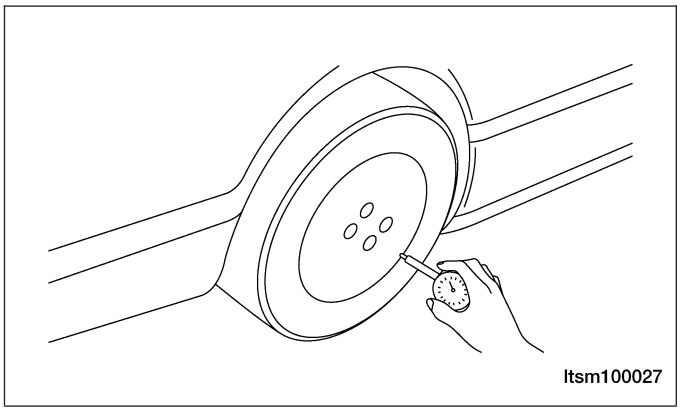

4. Check the front tire and wheel assemblies for excessive radial runout.
5. Inspect all suspension component fasteners for looseness and proper torque.
6. Inspect all ball joints and all steering linkage for looseness and any sign of wear or damage.
7. Inspect the rubber bushings on all the suspension components for signs of wear or deterioration. If any bushings show signs of wear or deterioration, they should be replaced prior to aligning the vehicle.
8. Check vehicle curb height.

Wheel Alignment Setup

1. Position the vehicle on an alignment rack.

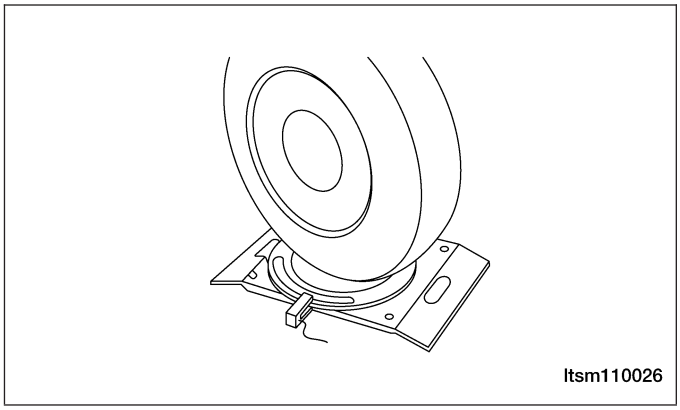

2. Install all required alignment equipment on the vehicle, per the alignment equipment manufacturer's instructions. On this vehicle, a four-wheel alignment is recommended.
3. Read the vehicle's current front and rear alignment settings. Compare the vehicle's current alignment settings to the vehicle specifications for camber, caster and toe-in.

NOTE :
Prior to reading the vehicle's alignment readouts, the front and rear of vehicle should be jounced. Induce jounce (rear first, then front) by grasping the center of the bumper and jouncing each end of the vehicle an equal number of times. The bumper should always be released when vehicle is at the bottom of the jounce cycle.

Specifications

Torque Specifications

DESCRIPTION	TORQUE (N·m)
Camber Adjustment Bolts	100
Inner Tie Rod Adjuster Jam Nut	30
Rear Lower Control Arm Eccentric Cam Bolt	80 - 100
Rear Upper Control Arm Eccentric Cam Bolt	80 - 100
Wheel Mounting Nuts	110

Downloaded from www.Manualslib.com manuals search engine

Front Axle Alignment Specifications

FRONT WHEEL ALIGNMENT	PREFERRED SETTING	ACCEPTABLE RANGE
Camber	-51’	+9’ to -1°51’
Caster	+2°50’	+3°30’ to +2°5’
Inclination	+11°30’	+12°15’ to +10°45’
Toe-Individual	0’	+5’ to -5’

Rear Axle Alignment Specifications

REAR WHEEL ALIGNMENT	PREFERRED SETTING	ACCEPTABLE RANGE
Camber	-54’	+24’ to -1°24’
Toe-Individual	-5’	+5’ to -15’

Downloaded from www.Manualslib.com manuals search engine

DIAGNOSIS & TESTING

Vehicle Inspection

Inspect the following for damage:
- Inspect the tires.
- Inspect the rims.

Replace any tire or rim that is found to be damaged.

Tire Wear

Inspect the following for accurate tire wear:
- Check the depth of tire remaining tread.
- Standard tire: not less than 1.6 mm.
- Snow tire: 50% tire tread.

If the tread is below the specifications, the tire should be replaced.

Tire Wear Chart

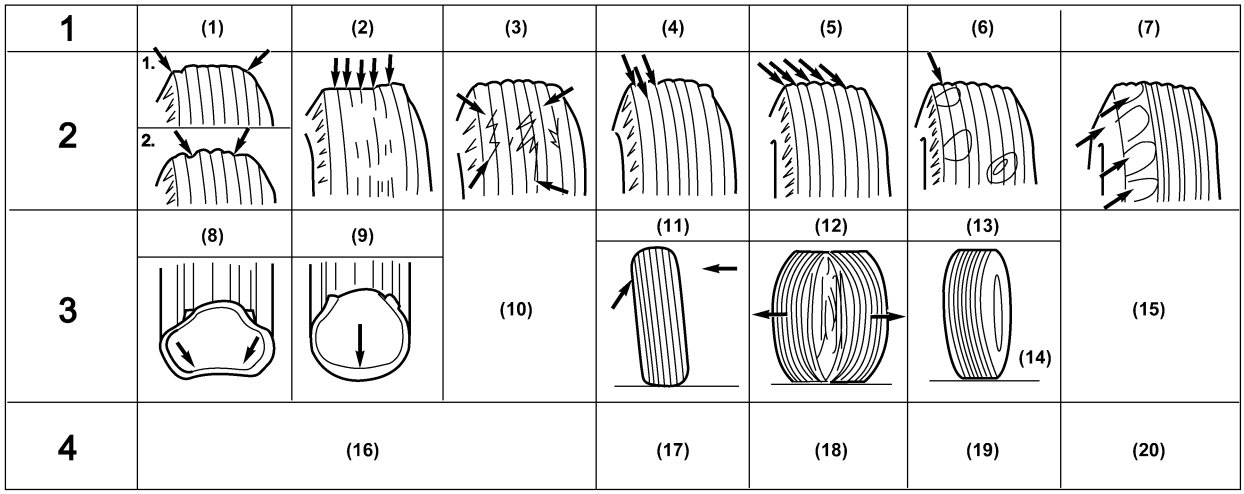

besm100022

1 Condition:	(1) Rapid Wear At Shoulders	(2) Rapid Wear At Center	(3) Cracked Treads	(4) Wear On One Side	(5) Feathered Edge	(6) Bald Spots	(7) Scalloped Wear
2 Effect:	(1) Excessive Tire Wear	(2) Excessive Tire Wear	(3) Tire Damage	(4) Vehicle Pulls	(2) Excessive Tire Wear	(6) Poor Traction	(7) Excessive Tire Wear
3 Cause:	(8) Under Inflation Or Lack Of Rotation	(9) Over Inflation Or Lack Of Rotation	(10) Under Inflation Or Excessive Speed	(11) Excessive Camber	(12) Incorrect Toe-in	(13) Unbalanced Wheel	(15) Lack Of Rotation / Tires Worn / Alignment / Suspension
4 Correction:	(16) Adjust Tire Pressure To Specifications / Rotate Tires	(16) Adjust Tire Pressure To Specifications / Rotate Tires	(16) Replace Tire	(17) Adjust Camber To Specifications	(18) Adjust Toe-In To Specifications	(19) Balance Wheels	(20) Rotate Tires / Replace Tires / Check Alignment / Suspension

Downloaded from www.Manualslib.com manuals search engine

Alignment Troubleshooting Chart

CONDITION	POSSIBLE CAUSES	CORRECTIONS
Early Tire Wearing	· Incorrect tire pressure. · Incorrect wheel alignment.	· Adjust the tire pressure. · Check the wheel alignment and then adjust.
Tire Noise	· Incorrect tire pressure. · Tire wearing.	· Adjust the tire pressure. · Check the wheel alignment and then adjust.
Road Noise Or Vehicle Body Vibration	· Incorrect tire pressure. · Unbalanced tire. · Deformation of rim or tire. · Tire wearing.	· Adjust the tire pressure. · Check the wheel alignment and then adjust. · Repair or install new suspension component as necessary.
Up-Down Vibration Of The Steering Wheel	· Loose wheel nut or axle. · Unbalanced tire. · Crack or wearing of engine mounting rubber. · Crack or wearing of transmission bracket rubber.	· Fasten wheel nut. · Check the wheel alignment and then adjust. · Repair or install new suspension component as necessary. · Repair or install new engine or transmission mounting rubber as necessary.
Circular Vibration Of The Steering Wheel	· Loose wheel nut or axle. · Unbalanced tire. · Deficient tire pressure. · Damage or wearing of front wheel bearing. · Failure of steering system.	· Fasten wheel nut. · Adjust the tire pressure. · Check the wheel alignment and then adjust. · Repair or install new suspension component as necessary.
Steering Wheel Deflecting To Single Side	· Incorrect tire pressure. · Excessive tire wearing. · Failure of steering system. · Failure of suspension system.	· Adjust the tire pressure. · Check steering system. · Check the wheel alignment and then adjust. · Repair or install new suspension component as necessary.
Unstable Driving	· Loose wheel nut. · Failure of steering system. · Failure of suspension system.	· Adjust the tire pressure. · Check steering system. · Check the wheel alignment and then adjust. · Repair or install new suspension component as necessary.
Heavy Steering Wheel	· Incorrect tire pressure. · Failure of steering system. · Failure of suspension system. · Incorrect wheel alignment.	· Adjust the tire pressure. · Check steering system. · Check the wheel alignment and then adjust. · Repair or install new suspension component as necessary.
Bad Alignment Return Of Steering Wheel	· Incorrect tire pressure · Failure of steering system · Failure of suspension system	· Adjust the tire pressure. · Check steering system. · Check the wheel alignment and then adjust. · Repair or install new suspension component as necessary.

Downloaded from www.Manualslib.com manuals search engine

ON-VEHICLE SERVICE

Front Wheel Alignment

Front Wheel Alignment Specifications

NOTE :
If the vehicle has been in an accident causing the front axle components to be damaged, the damaged components must be replaced before performing a front wheel alignment.

FRONT WHEEL ALIGNMENT		
FRONT WHEEL ALIGNMENT	**PREFERRED SETTING**	**ACCEPTABLE RANGE**
Camber	-51’	+9’ to -1°51’
Caster	+2°50’	+3°30’ to +2°5’
Inclination	+11°30’	+12°15’ to +10°45’
Toe-Individual	0’	+5’ to -5’

Front Axle Toe-In Adjustment

CAUTION:
Do not twist the inner tie rod steering gear boot (bellows) while turning the inner tie rod during front toe-in adjustment. It may be necessary to remove the clamp where the boot meets the inner tie rod.

1. Loosen the tie rod adjusting jam nut (1).
   (Tighten: Tie rod adjusting jam nut to 35 ± 3 N·m)
2. Grasp the inner tie rod shaft (2) and adjust the tie rod end until the front toe-in is set to the proper specification.

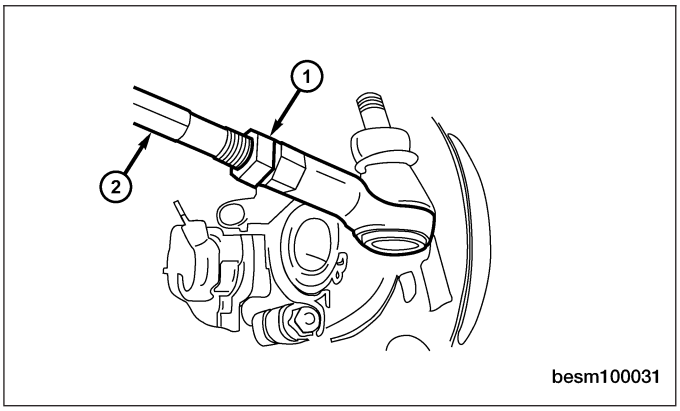

3. Make sure the inner tie rod steering gear boot is not twisted. If removed, reinstall the clamp where the boot meets the inner tie rod.
4. Remove the alignment equipment.
5. Lower vehicle and jounce the front and rear of the vehicle.

Front Camber Adjustment

NOTE :
The front axle camber can not be adjusted. Replace the relative components if necessary.

Downloaded from www.Manualslib.com manuals search engine

Rear Wheel Alignment

Rear Wheel Alignment Specifications

NOTE :
If the vehicle has been in an accident causing the rear axle components to be damaged, the damaged components must be replaced before performing a rear wheel alignment.

REAR WHEEL ALIGNMENT		
REAR WHEEL ALIGNMENT	**PREFERRED SETTING**	**ACCEPTABLE RANGE**
Camber	-54’	-24’ to -1°24’
Toe-Individual	-5’	+5’ to -15’

Rear Axle Toe-In Adjustment

1. While holding the cam bolt stationary, loosen the lower control arm mounting cam nut (1).
   (Tighten: Lower control arm mounting cam nut to 80 - 100 N·m)
2. Rotate the cam bolt head left or right until the rear wheel Toe-in for that rear wheel is set to the preferred specification.
3. While holding the cam bolt head stationary, tighten the Toe-in link mounting cam bolt to the specified torque.

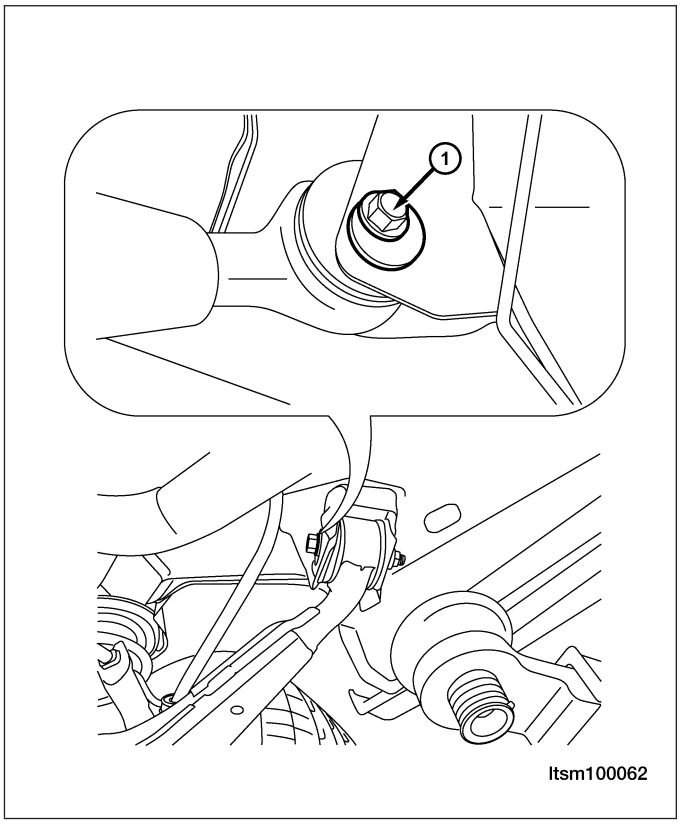

Downloaded from www.Manualslib.com manuals search engine

Rear Camber Adjustment

1. While holding the cam bolt stationary, loosen the upper control arm bolt (1).
   (Tighten: Upper control arm bolt to 80 - 100 N·m)
2. Rotate the cam bolt head left or right until the rear wheel camber for that rear wheel is set to the preferred specification.
3. While holding the cam bolt head stationary, tighten the upper control arm bolt to the specified torque.

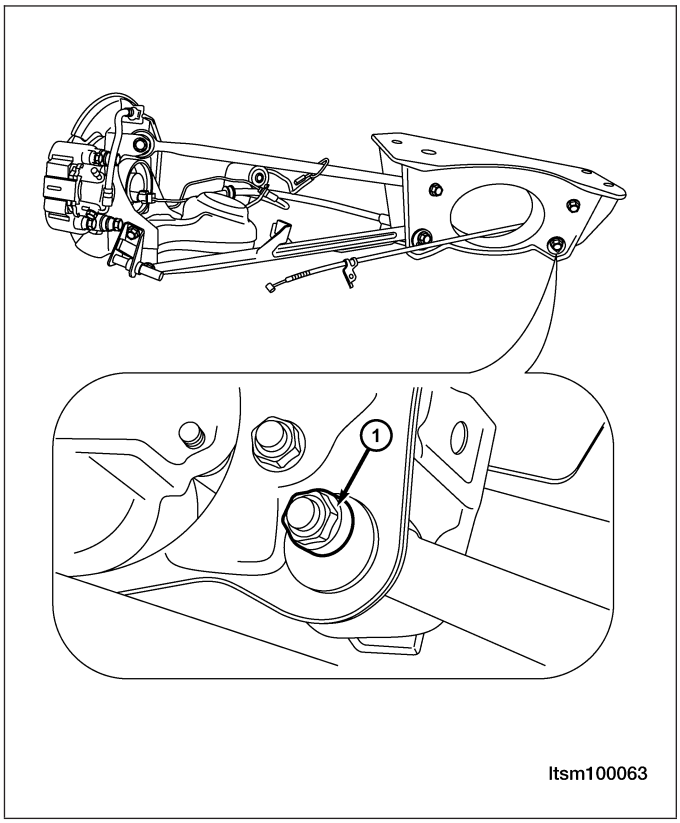

Downloaded from www.Manualslib.com manuals search engine

WHEELS AND TIRES

GENERAL INFORMATION 10-48
Description 10-48
Operation 10-48
Specifications 10-48

DIAGNOSIS & TESTING 10-50
Vehicle Inspection 10-50
Tire and Wheel Vibration 10-50
Tire Wear Patterns 10-50
Wheel Out-Of-Round Inspection 10-50

ON-VEHICLE SERVICE 10-51

Tire Repair 10-51
Description 10-51
Replacement Procedure 10-51
Repair Procedure 10-51

Wheel Assembly 10-52
Description 10-52
Removal & Installation 10-52

Wheel Balance 10-52
Description 10-52
Wheel Balance Procedure 10-53

Tire Rotation 10-53
Description 10-53
Non-Directional Tires 10-54
Directional Tires 10-54

Downloaded from www.Manualslib.com manuals search engine

GENERAL INFORMATION

Description

Tires are designed and engineered for each specific vehicle. They provide the best overall performance for normal operation. The ride and handling characteristics match the vehicle's requirements. With proper care they will give excellent reliability, traction, skid resistance, and tread life.

Tire Identification

- Tire type, size, load index and speed rating are encoded in the letters and numbers imprinted on the side wall of the tire.

Spare Tire

- A full size spare tire and wheel assembly is standard equipment on this vehicle. The original tire should be repaired or replaced at the first opportunity, then reinstalled.

Operation

Driving habits have more effect on tire life than any other factor. Careful drivers will obtain, in most cases, much greater mileage than severe use or careless drivers. A few of the driving habits which will shorten the life of any tire are:

- Rapid acceleration
- Severe application of brakes
- High-speed driving
- Taking turns at excessive speeds
- Striking curbs and other obstacles
- Operating vehicle with over or under inflated tire pressures

Specifications

Torque Specifications

DESCRIPTION	TORQUE (N·m)
Wheel Mounting Nuts	110

Tire Specifications

TIRE SPECIFICATION	TIRE SIZE - 215	TIRE SIZE - 235
Sectional Width	215	235
Aspect Ratio	70	60
Wheel Radius	R16	R16
Speed Rating	97S	100H

Downloaded from www.Manualslib.com manuals search engine

Tire Pressure Specifications of Cold Tire (kPa)

TIRE (235/60 R16)	PRESSURE
Front Tires	200
Rear Tires	200
Spare Tire	250

Rim Out-Of-Round Specifications

DESCRIPTION	MAXIMUM RUN-OUT (mm)
Aluminum Rim	3

Downloaded from www.Manualslib.com manuals search engine

DIAGNOSIS & TESTING

Vehicle Inspection

Visual inspection of the vehicle is recommended prior to road testing or performing any other procedure. Raise the vehicle on a suitable hoist.

Inspect the following:
- Inspect tires and wheels for damage, mud packing and unusual wear; correct as necessary.
- Check and adjust tire pressure to the pressure listed on the label attached to the driver's door opening.

Tire and Wheel Vibration

Tire and wheel imbalance, runout and force variation can cause vehicles to exhibit steering wheel vibration.

NOTE :
Balance equipment must be calibrated and maintained per equipment manufacturer's specifications.

Tire Wear Patterns

Tire wear patterns can be traced to the following tire conditions:
- Under inflation will cause wear on the shoulders of tire.
- Over inflation will cause wear at the center of tire.
- Excessive camber causes the tire to run at an angle to the road. One side of tread is then worn more than the other.
- Excessive toe-in or toe-out causes wear on the tread edges and a feathered effect across the tread.

NOTE :
Tread wear indicators are molded into the bottom of the tread grooves. When tread depth is 1.6 mm, the tread wear indicators will appear as a band. Tire replacement is necessary when indicators appear in two or more grooves, or if localized balding occurs.

Wheel Out-Of-Round Inspection

- Raise vehicle and securely support it.
- Attach a dial indicator on the edge of the rim and measure its unevenness.
- Replace the rim if necessary.

Downloaded from www.Manualslib.com manuals search engine

ON-VEHICLE SERVICE

Tire Repair

Description

Tires are designed and engineered for each specific vehicle. They provide the best overall performance for normal operation. The ride and handling characteristics match the vehicle's requirements. With proper care they will give excellent reliability, traction, skid resistance, and tread life.

WARNING!

Failure to equip the vehicle with tires having adequate speed capability can result in sudden tire failure.
In order to maintain the speed capability of the vehicle, replacement tires must have speed ratings equal to or higher than those fitted to the vehicle as original equipment. If tires with lower speed ratings are fitted, the vehicle's handling may be affected and the speed capability of the vehicle may be lowered to the maximum speed capability of the replacement tires. To avoid an accident resulting in severe or fatal injury, consult the tire manufacturer in regards to maximum speed ratings.

Replacement Procedure

Note the following guidelines when replacing a tire:
- It is recommended that tires equivalent to the original equipment tires be used when replacement is needed.
- Failure to use equivalent replacement tires may adversely affect the safety and handling of the vehicle.
- The use of tires smaller than the minimum tire size approved for the vehicle can result in tire overloading and failure.
- Use tires that have the approved load rating for the vehicle and never overload them.
- Failure to equip the vehicle with tires having adequate speed capability can result in sudden tire failure and loss of vehicle control.
- The use of oversize tires may cause interference with vehicle components. Under extremes of suspension and steering travel, interference with vehicle components may cause tire damage.

Perform the following when replacing a tire:
1. Raise and support the vehicle.
2. Remove the wheel mounting nuts and the wheel assembly.
3. Deflate the tire completely before removing the tire from the wheel.
4. Use lubrication such as a mild soap solution when dismounting or mounting tire.
5. Replace the tire with a tire approved for the vehicle.
6. Use tools free of burrs or sharp edges which could damage the tire or wheel rim.
7. Before mounting tire on wheel, make sure all rust is removed from the rim bead and repaint if necessary.
8. Balance the wheel assembly.
9. Install the wheel assembly and install the wheel mounting nuts.
   (Tighten: Wheel mounting nuts to 110 N·m)

Repair Procedure

Note the following guidelines when performing a tire repair:
- For proper repairing, a radial tire must be removed from the wheel.
- Repairs should only be made if the defect, or puncture, is in the tread area.
- The tire should be replaced if the puncture is located in the sidewall.

Perform the following when repairing a tire:
1. Raise and support the vehicle.
2. Remove the wheel mounting nuts and the wheel assembly.
3. Deflate the tire completely before removing the tire from the wheel.
4. Use lubrication such as a mild soap solution when dismounting or mounting tire.
5. Repair the tire only if the defect, or puncture, is in the tread area.
6. Use tools free of burrs or sharp edges which could damage the tire or wheel rim.
7. Before mounting tire on wheel, make sure all rust is removed from the rim bead and repaint if necessary.

Downloaded from www.Manualslib.com manuals search engine

8. Install the wheel assembly and install the wheel mounting nuts.
   (Tighten: Wheel mounting nuts to 110 N·m)

Wheel Assembly

Description

Original equipment wheels are designed for operation up to the specified maximum vehicle capacity.

Inspect wheels for the following:
- Dents or cracks
- Damaged wheel bolt holes
- Air leaks from any area or surface of the rim
- Excessive run out

NOTE :
Do not attempt to repair a wheel by hammering, heating or welding.

NOTE :
The wheel nuts are designed for specific applications. Do not use replacement bolts with a different design or lesser quality.

Removal & Installation

1. Raise and support the vehicle.
2. If the vehicle is equipped with wheel center caps that cover the wheel nuts, remove the cap with an appropriate removal tool utilizing the notch located between the wheel and the outer edge of the cap.
   NOTE: Use care not to damage the finish on the wheel.
3. Remove the wheel mounting nuts (2) with a suitable tool and remove the wheel assembly (1).
   (Tighten: Wheel mounting nuts to 110 N·m)
4. Installation is in the reverse order of removal.

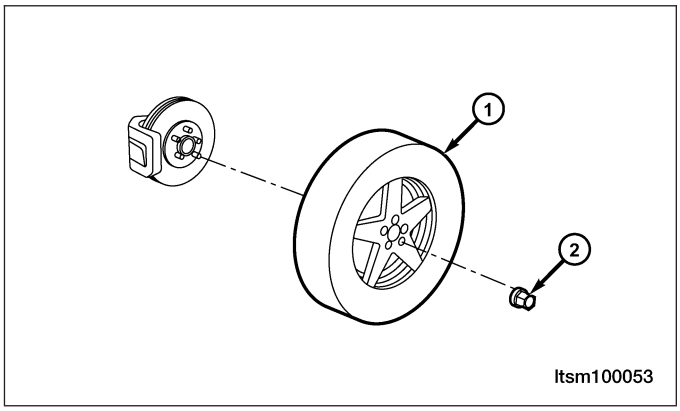

Wheel Balance

Description

Balance the wheel assembly as necessary following the wheel balancer manufacturer's instructions.
- Road test the vehicle for at least 5 miles.
- If the vibration persists, continue with Diagnosis & Testing procedure.

NOTE :
- Balance equipment must be calibrated and maintained per equipment manufacturer's specifications.
- Wheel weight must fit the rim.

Downloaded from www.Manualslib.com manuals search engine

Wheel Balance Procedure

1. Raise and support the vehicle.
2. Remove the wheel mounting nuts and the wheel assembly.
3. Perform a dynamic balance test.

NOTE :
A wheel requiring 5g or less of weight per side is considered to be within the proper specifications for a wheel balance.

4. Install the appropriate wheel weights on the inner (2) and outer (1) edges of the rim until the wheel is balanced within specifications.

NOTE :
Not more than one wheel weight can be attached to each side of the wheel, with its maximum weight not exceeding 40g.

CAUTION:
Use caution not to damage wheel weights during tire and wheel installation.

5. Install the wheel assembly and install the wheel mounting nuts.
   (Tighten: Wheel mounting nuts to 110 N·m)

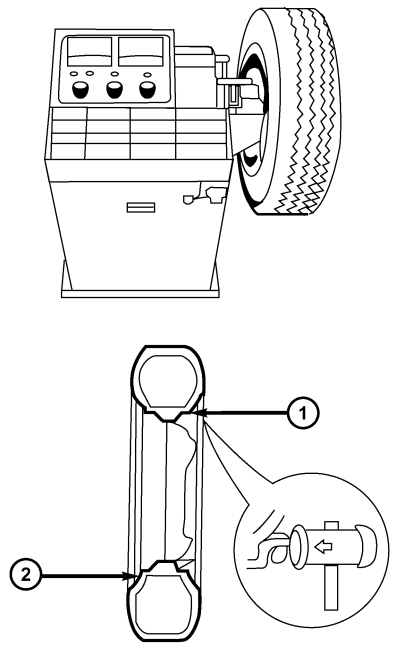

besm100020

Tire Rotation

Description

Tires on the front and rear operate at different loads and perform different steering, driving, and braking functions. For these reasons they wear at unequal rates and tend to develop irregular wear patterns. These effects can be reduced by rotating the tires at regular intervals.

The benefits of tire rotation are:
- Increase tread life
- Maintain traction levels
- A smooth, quiet ride

Downloaded from www.Manualslib.com manuals search engine

Non-Directional Tires

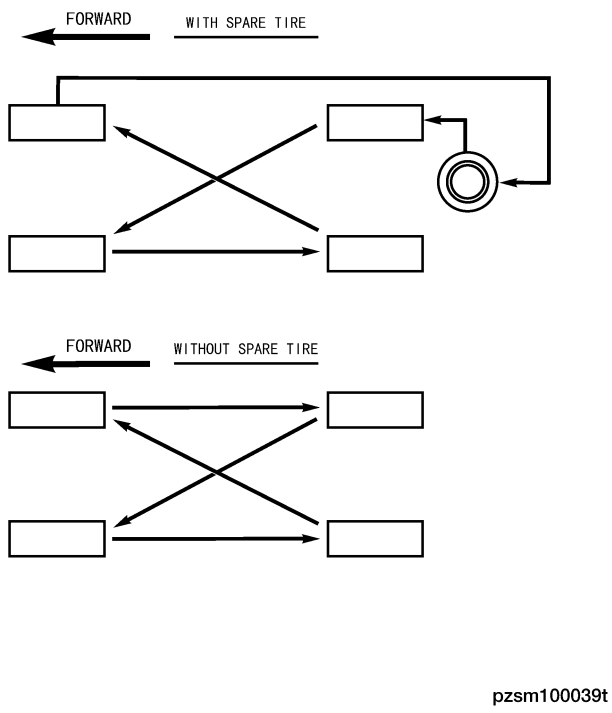

The suggested method of tire rotation is shown. Other rotation methods can be used, but they will not provide all the tire longevity benefits.

NOTE :
Only the four-tire rotation method may be used if the vehicle is equipped with a compact or temporary spare tire.

1. Raise and support the vehicle.
2. Remove the wheel mounting nuts and the wheel assembly.
3. Rotate the tire to the desired location.

CAUTION:
Use caution not to damage wheel weights during tire and wheel installation.

4. Install the wheel assembly and install the wheel mounting nuts.
   (Tighten: Wheel mounting nuts to 110 N·m)

Directional Tires

Some vehicles may be fitted with special high-performance tires having a directional tread pattern. These tires are designed to improve traction on wet pavement. To obtain the full benefits of this design, the tires must be installed so that they rotate in the correct direction. This is indicated by arrows on the tire sidewalls. When being installed, extra care is needed to ensure that this direction of rotation is maintained.

1. Remove the wheel mounting nuts and the wheel assembly.
2. Rotate the tire to the desired location.

CAUTION:
Use caution not to damage wheel weights during tire and wheel installation.

3. Install the wheel assembly and install the wheel mounting nuts.
   (Tighten: Wheel mounting nuts to 110 N·m)

Downloaded from www.Manualslib.com manuals search engine

STEERING
11

CONTENTS

	page
Steering System	**11-1**
Steering Column	**11-8**
Steering Gear	**11-18**
Power Steering Pump	**11-31**

STEERING SYSTEM

GENERAL INFORMATION 11-2
- Description 11-2
- Operation 11-2
- Specifications 11-3
- Special Tools 11-3

DIAGNOSIS & TESTING 11-4
- Power Steering Troubleshooting Chart 11-4
- Power Steering Fluid Troubleshooting Chart 11-5

ON-VEHICLE SERVICE 11-6
- **Power Steering Filling and Flushing** 11-6
  - Filling 11-6
  - Flushing 11-6
  - Inspection 11-7

11

Downloaded from www.Manualslib.com manuals search engine

GENERAL INFORMATION

Description

The power steering pump is a constant flow rate and displacement vane type pump. The pump reservoir supplies fluid to the pump body. The pump is connected to the steering by the pressure and return hoses. The steering gear used is a rack and pinion type gear.

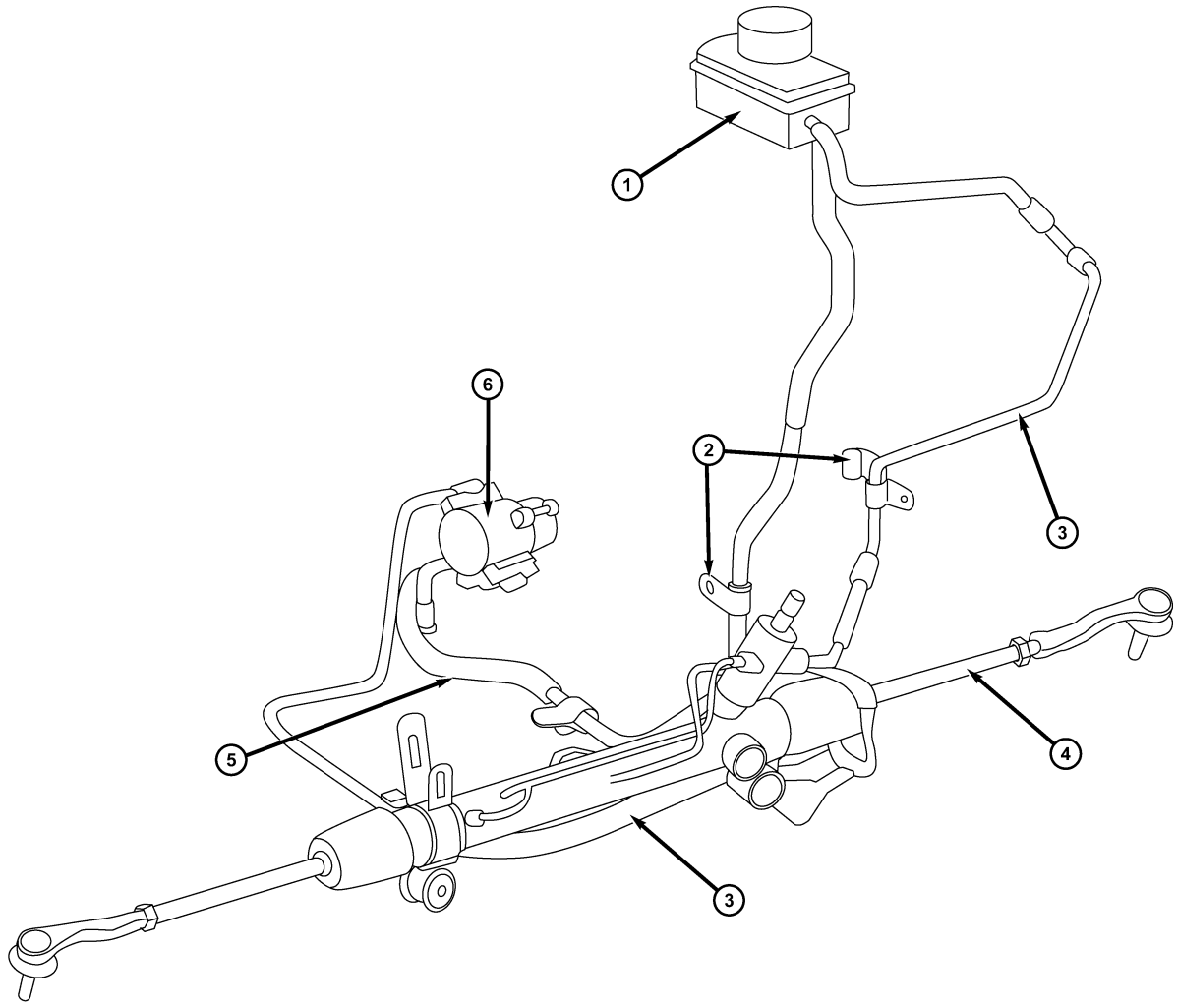

ltsm110003

1 - Power Steering Fluid Reservoir	4 - Power Steering Gear Assembly
2 - Power Steering Fluid Pressure Hose Bracket	5 - Power Steering Fluid Return Hose
3 - Power Steering Fluid Pressure Hose	6 - Power Steering Pump

Operation

Turning of the steering wheel is converted into linear travel through the meshing of the helical pinion teeth with the rack teeth within the steering gear. The lateral travel pushes and pulls the tie rods to change the direction of the vehicle's front wheels.

Power assist steering is provided by a belt driven rotary type pump. It directs fluid through power steering fluid hoses to the power steering gear where it is used to assist the driver's turning effort.

Downloaded from www.Manualslib.com manuals search engine

Manual steering control of the vehicle can be maintained if power steering assist is lost. However, under this condition, steering effort is significantly increased.

WARNING!
Power steering fluid, engine parts and exhaust system may be extremely hot if engine has been running. Do not start engine with any loose or disconnected hoses. Do not allow hoses to touch hot exhaust manifold or catalyst. Fluid level should be checked with the engine off to prevent personal injury from moving parts.

Specifications

Fluid Specifications

DESCRIPTION	CAPACITY (L)
Power Steering Fluid (ATF III)	1.1

Special Tools

Steering Wheel Puller	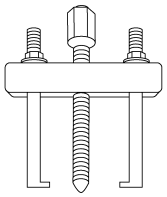 besm110015
Ball Joint Separator CH-10002	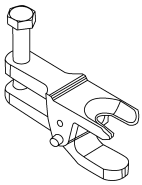 besm020086

Downloaded from www.Manualslib.com manuals search engine

Power Steering Troubleshooting Chart

Review this troubleshooting chart any time a power steering system problem is present. This chart will help determine if the power steering pump or power steering gear is functioning properly.

CONDITION	POSSIBLE CAUSES	CORRECTION
Steering Wheel Is Loose	· Steering wheel retaining bolt loose. · Loose steering column to instrument panel fasteners.	· Check steering wheel retaining bolt torque and tighten to specifications if necessary. · Check steering column to instrument panel fastener torque and tighten to specifications if necessary.
Steering Catches, Surges Or Sticks In Certain Positions Or Is Difficult To Turn	· Low power steering fluid level. · Tire(s) not properly inflated. · Loose or slipping power steering/ accessory drive belt. · Lack of lubrication in steering gear outer tie rod end(s).	· Check fluid level and fill to proper level if necessary. Check for leaks. Make sure all air is bled from system. · Check and inflate tires to the specified pressure. · Verify belt tension. Replace belt auto-tensioner and belt if necessary. · Check the outer tie rod ends.
Steering Wheel Does Not Return To Center Position	· Tire(s) not properly inflated. · Improper front wheel alignment.	· Check and inflate tires to the specified pressure. · Check and adjust wheel alignment if necessary.
Excessive Steering Wheel Kickback From Road Inputs	· Air in power steering fluid. · Power steering gear loose on cradle/sub-frame. · Steering column, coupling or intermediate shaft worn or loose. · Power steering pump flow is too low.	· Inspect for excessive air bubbles in fluid (fluid will appear foamy and lighter in color). Inspect hoses for leaks and replace if necessary. Bleed air from fluid. · Inspect gear mounting bolts. Replace if necessary and tighten to specifications. · Rotate steering wheel back-and-forth while inspecting intermediate shaft going into steering gear. Look for excessive free-play. Retighten if loose bolt is found. Replace steering column, coupling or intermediate shaft if necessary. · Perform power steering flow and pressure test. Look for low or erratic flow or pressure. Replace power steering pump if necessary.

Downloaded from www.Manualslib.com manuals search engine

Power Steering Fluid Troubleshooting Chart

NOTE :
Extremely cold temperatures may cause power steering fluid aeration. The air should work its way out of the system as the fluid warms.

CONDITION	POSSIBLE CAUSES	CORRECTION
Low Fluid Level With Visible Leak	· Loose power steering hose fittings or connections. · Damaged or missing O-ring at power steering hose tube nuts. · Power steering line or hose failure. · Power steering component leaking (reservoir, pump, gear).	· Check torque on all tube nuts (at gear and pump). Inspect clamps at all rubber hose connections for correct position, damage and tension. Tighten tube nuts to specifications as required. Reposition or replace clamps at hose connections. Clean joints and reinspect for leaks. · Remove tube nut and inspect O-ring. If damaged or missing, replace O-ring. Clean joints and reinspect for leaks. · Clean fluid from around suspect areas. Run vehicle and inspect for leaks. Look inside reservoir to see if air is being ingested. Replace hoses if necessary. · Clean fluid from around suspect areas. Run vehicle and inspect for leaks. Look inside reservoir to see if air is being ingested. Replace power steering component if necessary.
Aerated Fluid	· Low power steering fluid level. · Air leak at power steering supply hose, reservoir or pump.	· Check fluid level and fill to proper level if necessary. Check for leaks. Make sure all air is bled from system. · Inspect components. Place a hand vacuum pump with reservoir and verify that system can sustain vacuum. System should not lose more than 1 psi in 2 minutes (make sure vacuum pump is sealed well to the reservoir). Replace steering component if necessary.

Downloaded from www.Manualslib.com manuals search engine

ON-VEHICLE SERVICE

Power Steering Filling and Flushing

Filling

1. Fill the power steering fluid reservoir to the proper level and let the fluid settle for at least two minutes.
2. Start the engine and let run for a few seconds, then turn the engine off.
3. Add fluid if necessary.
4. Repeat the above procedure until the fluid level remains constant after running the engine.
5. When the steering fluid temperature is relatively high, the steering fluid level will approach to the “MAX” level.
6. When the steering fluid cools down, the steering fluid level may approach to the “MIN” level.

NOTE :
If the steering fluid is extremely foamy or milky looking, allow the vehicle to stand a few minutes and repeat the procedure.

Flushing

1. Raise and support the vehicle.
2. Remove the steering fluid reservoir release cap.
3. Siphon out the contaminated power steering fluid from the power steering liquid reservoir.
4. Remove the return hose clamp (1) from the power steering return hose.
5. Install a plug to the return hose fitting on the fluid reservoir.

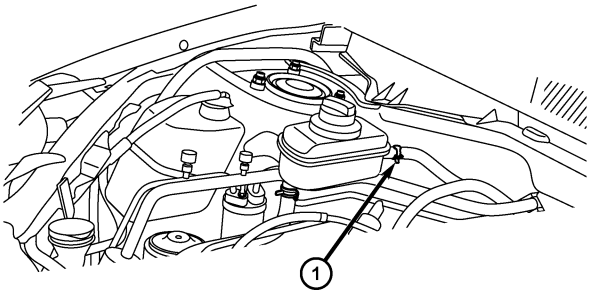

ltsm110042

6. Insert the power steering fluid return hose into a container for the discharged power steering fluid.
7. Fill the power steering fluid reservoir.
8. Start the engine and idle.
9. Let the engine idle until the return hose discharges clean power steering fluid.
10. Stop the engine and remove the plug from the power steering reservoir.
11. Reinstall the power steering return hose to the power steering reservoir.
12. Fill the power steering system (See Filling Procedure in Power Steering Filling and Flushing in Section 11 Steering).

NOTE :
Approximately 1.0L of power steering fluid should be needed to fully flush the power steering reservoir. DO NOT mix other fluids in the power steering fluid.

Downloaded from www.Manualslib.com manuals search engine

Inspection

1. If the power steering fluid level is low, inspect the entire power steering system for potential leaks.

CAUTION:
DO NOT operate the vehicle with foamy steering fluid for an extended period. This may cause pump damage.

2. Perform the following to inspect the power steering fluid reservoir level:
   - Park the vehicle on a level surface.
   - Start the engine.
   - Turn the steering wheel several times to heat the power steering fluid to 50°- 60°C.
   - With the engine running, turn the steering wheel left and right to the wheel stops and repeat this several times.
   - Check the power steering fluid reservoir to see whether there is foam or milky fluid present. Check the fluid level difference between engine off (2) and engine running (1). If the fluid level variation exceeds 5 mm, air is in the system and the air should be bled from the power steering system.

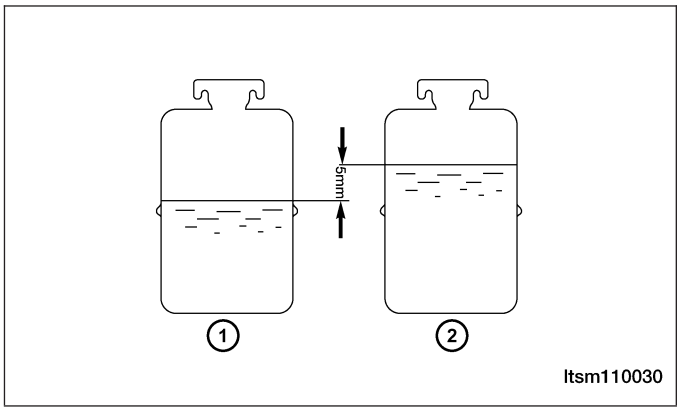

Downloaded from www.Manualslib.com manuals search engine

STEERING COLUMN

GENERAL INFORMATION 11-9
Description 11-9
Operation 11-10
Specifications 11-10
Special Tool 11-10

DIAGNOSIS & TESTING 11-11
Vehicle Inspection 11-11
Loose Steering / Vehicle Leads / Drifts
Troubleshooting Chart 11-11

ON-VEHICLE SERVICE 11-12

Steering Wheel 11-12
Removal & Installation 11-12
Inspection - Steering System 11-13

Steering Column Shroud 11-14
Removal & Installation 11-14

Steering Column Shaft 11-15
Removal & Installation 11-15

Downloaded from www.Manualslib.com manuals search engine

GENERAL INFORMATION

Description

The steering column has been designed so that the wiring, switches, shrouds and steering wheel can be serviced without removing the steering column from the vehicle.

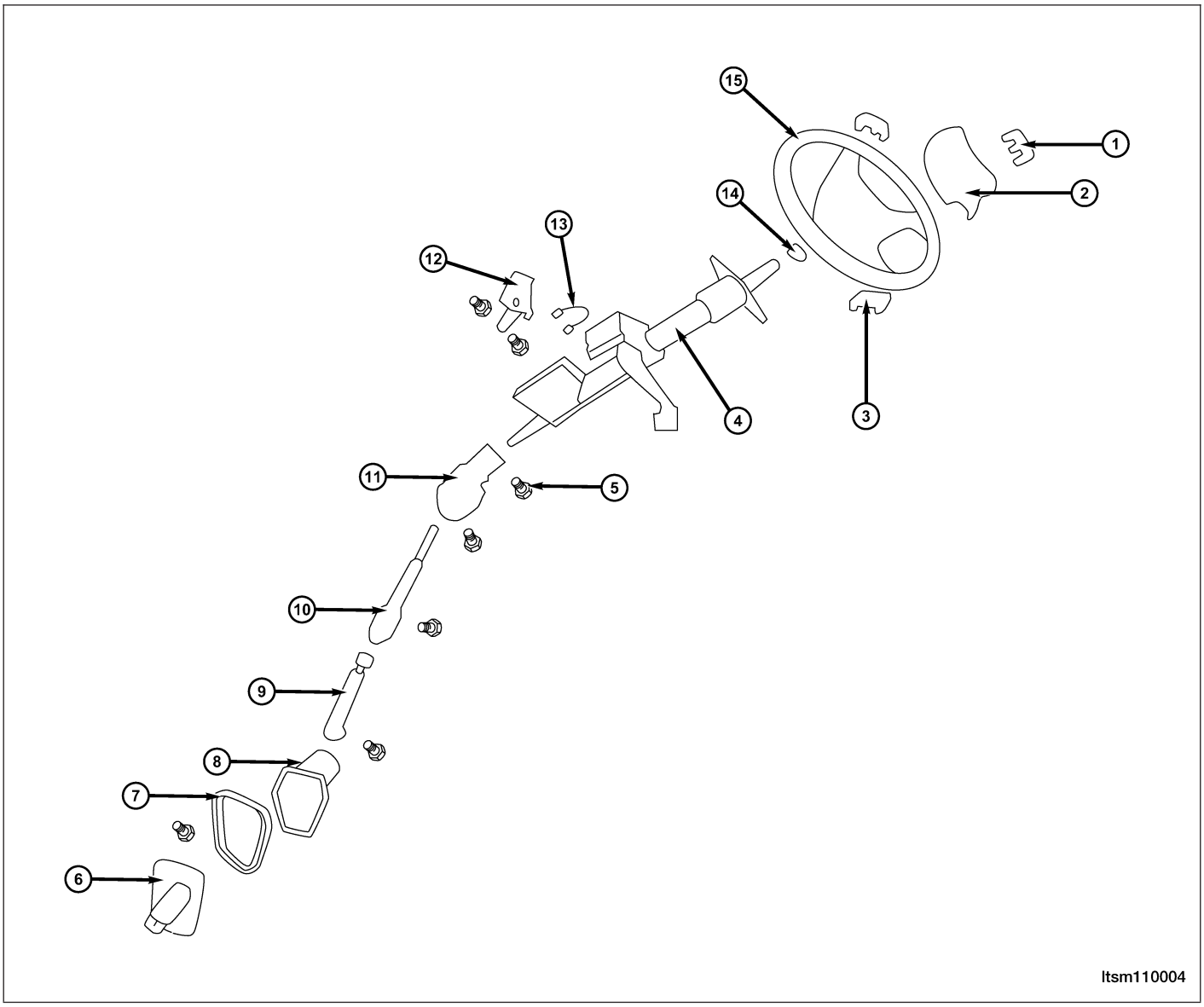

1 - Horn Hood Assembly	9 - Intermediate Shaft
2 - Airbag	10 - Lower Universal Joint
3 - Spoke Trim Cover	11 - Upper Universal Joint
4 - Adjustable Steering Column	12 - Installed Bracket
5 - Bolt	13 - Adjusting Spring
6 - Steering Lower Shield	14 - Steering Wheel Nut
7 - Jacket Mounting Bracket	15 - Steering Wheel
8 - Steering Upper Shield	

Downloaded from www.Manualslib.com manuals search engine

Operation

The steering column is the mechanical linkage between the steering wheel and the steering gear. The steering column shaft then connects the steering column to the steering gear. The tilt function of the steering column is controlled by a mechanical lever on the underside of the steering column, which uses a cam to lock and unlock the steering column.

Specifications

Torque Specifications

DESCRIPTION	TORQUE (N·m)
Steering Wheel Lock Nut	25 - 30

Special Tool

Steering Wheel Puller	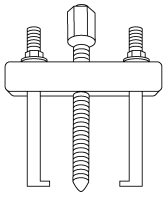 besm110015

Downloaded from www.Manualslib.com manuals search engine

DIAGNOSIS & TESTING

Vehicle Inspection

There is some noise in all power steering systems. One of the most common is a hissing sound. Hiss is a high frequency noise similar to that of a water tap being closed slowly. The noise is present in all valves that have a high velocity steering fluid passing through an orifice. There is no relationship between this noise and steering performance. The hissing sound is commonly heard during the following operations:

- Evident at a standstill
- At park with the engine running
- When the steering wheel is at the end of its travel

Loose Steering / Vehicle Leads / Drifts Troubleshooting Chart

CONDITION	POSSIBLE CAUSES	CORRECTION
Excessive Play In Steering Wheel	· Worn or loose suspension or steering components. · Worn or loose wheel bearings. · Steering gear mounting. · Gear out of adjustment. · Worn or loose steering coupler.	· Repair if necessary. · Repair if necessary. · Tighten gear mounting bolts to specification. · Adjust gear to specification. · Repair if necessary.
Vehicle Pulls To One Side During Braking	· Tire pressure. · Air in brake hydraulics system. · Worn brake components.	· Adjust tire pressure. · Bleed brake system. · Repair if necessary.
Vehicle Leads Or Drifts From Straight Ahead Direction On Uncrowned Road	· Tire pressure. · Radial tire lead. · Brakes dragging. · Wheel alignment. · Weak or broken strut. · Loose or worn steering/suspension components.	· Adjust tire pressure. · Cross front tires. · Repair if necessary. · Align vehicle. · Replace strut. · Repair if necessary.

Downloaded from www.Manualslib.com manuals search engine

ON-VEHICLE SERVICE

Steering Wheel

Removal & Installation

WARNING!

Before servicing the steering column, the airbag system must be disarmed. Failure to do so may result in accidental deployment of the airbag and possible personal injury (See Airbag System Disarming Procedure in Section 14 Restraints).

NOTE :
To help maintain alignment of the spiral cable connector during reassembly, apply a small piece of tape to the spiral cable and the steering column to keep them in alignment.

1. Set the front wheels to the straight-ahead position.
2. Disconnect the negative battery cable.
3. Remove the driver airbag (See Driver Airbag Removal & Installation in Section 14 Restraints).
4. Disconnect the spiral cable electrical connector.
5. Remove the steering wheel lock nut (1).
   (Tighten: Steering wheel lock nut to 25 - 30 N·m)
6. Using the steering wheel puller, remove the steering wheel.

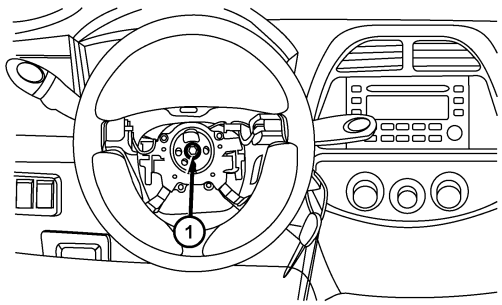

ltsm110047

7. Installation is in the reverse order of removal.

Installation Notes:

- The spiral cable could be damaged if installed in an improper position.
- Do not rotate the spiral cable quickly or beyond the limit of turns (this can cause the cable to snap).
- Verify the airbag system is operating properly after the repair is complete.

Downloaded from www.Manualslib.com manuals search engine

Inspection - Steering System

Steering Wheel Free-Play Inspection

- Set the front wheels to the straight-ahead position with the engine idling (hydraulic system is working).
- Slightly turn steering wheel to the right and left, and before the wheels begin turning, measure the free play of steering wheel.
  - Maximum limit: 40 mm.

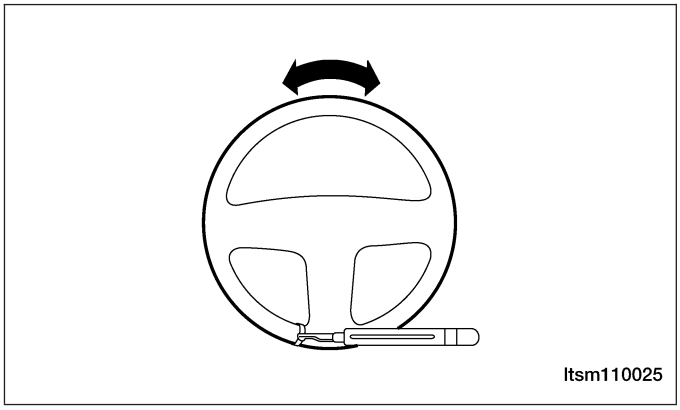

- If the free play exceeds the limit value, inspect the gap between the steering shaft joint and the steering linkage. Repair or replace the related parts as necessary. If the free play still exceeds the limit value, turn the steering wheel to the right position with the engine off. Apply 5 N·m of load to the steering wheel and inspect the free-play again.
  - Standard value: Less than 15 mm (steering wheel free play with the engine off)
- If free play exceeds standard value, remove steering gear housing and inspect the gross torque of pinion gear.

Static Steering Force Inspection

- Park the vehicle on a level surface, and turn the steering wheel to the straight-ahead position. Start the engine, adjust engine speed to 1000 ± 100 RPM.

CAUTION:

After adjusting the engine speed, return it back to standard idle speed.

- Connect a spring scale to the outer circle of steering wheel. Measure the steering force required when turning the steering wheel leftward and rightward (within 1.5 circles) at the straight-ahead position. If obvious steering force fluctuation exists, inspect the steering force as necessary.
  - Standard steering force: Less than 34 N·m
  - Fluctuation tolerance: Less than 5.9 N·m
- If the measured force exceeds the standard value, see the trouble shooting section for inspection and adjustment.

Downloaded from www.Manualslib.com manuals search engine

Steering Wheel Return to Center Inspection

NOTE :
This test should be performed during a road test.

- Make smooth turns and sharp turns. Check the driving ″sense″ to ensure there is no difference between the left and right turns in terms of steering force and the steering wheel returning to center.
- When the vehicle speed is between 20 to 30 km/h, turn the steering wheel 90° for 1 or 2 seconds and release the steering wheel. If the steering wheel returns over 70°, the steering wheel return function can be considered good.

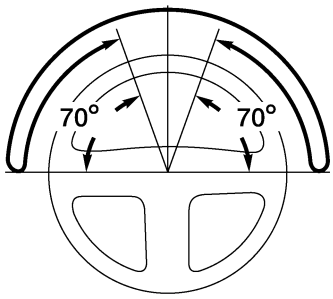

ltsm110029

NOTE :
When rapidly turning the steering wheel, there will be a sense of “heavy”, however, this does not indicate a problem with the steering system. This is due to insufficient steering fluid supplied to the steering fluid pump during idle speed.

Steering Column Shroud

Removal & Installation

WARNING!

Before servicing the steering column, the airbag system must be disarmed. Failure to do so may result in accidental deployment of the airbag and possible personal injury (See Airbag System Disarming Procedure in Section 14 Restraints).

NOTE :
To help maintain alignment of the spiral cable connector during reassembly, apply a small piece of tape to the spiral cable and the steering column to keep them in alignment.

1. Disconnect the negative battery cable.
2. Remove the driver airbag (See Driver Airbag Removal & Installation in Section 14 Restraints).
3. Remove the steering wheel lock nut (1).
   (Tighten: Steering wheel lock nut to 25 - 30 N·m)

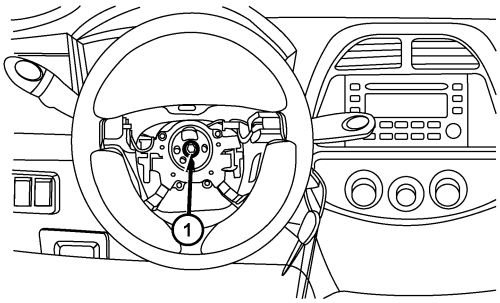

ltsm110047

Downloaded from www.Manualslib.com manuals search engine

4. Remove the three steering shroud retaining bolts (1).
   (Tighten: Steering shroud bolts to 8 N·m)

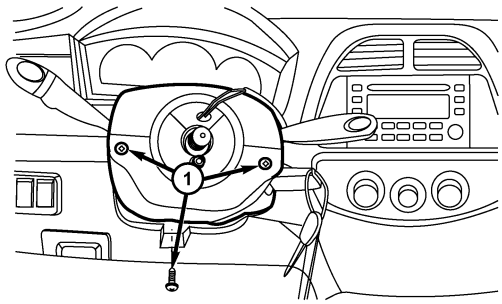

ltsm110031

5. Remove the shroud.
6. Installation is in the reverse order of removal.

Installation Notes:

- The spiral cable could be damaged if installed in an improper position.
- Do not rotate the spiral cable quickly or beyond the limit of turns (this can cause the cable to break).
- Verify the airbag system is operating properly after the repair is complete.

Steering Column Shaft

Removal & Installation

WARNING!

Before servicing the steering column, the airbag system must be disarmed. Failure to do so may result in accidental deployment of the airbag and possible personal injury (See Airbag System Disarming Procedure in Section 14 Restraints).

NOTE :
To help maintain alignment of the spiral cable connector during reassembly, apply a small piece of tape to the spiral cable and the steering column to keep them in alignment.

1. Disconnect the negative battery cable.
2. Set the front wheels to the straight-ahead position.
3. Disconnect the negative battery cable.
4. Remove the driver airbag (See Driver Airbag Removal & Installation in Section 14 Restraints).
5. Disconnect the spiral cable electrical connector.
6. Remove the steering wheel lock nut (1).
   (Tighten: Steering wheel lock nut to 25 - 30 N·m)

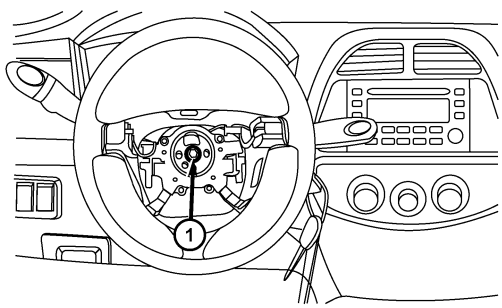

ltsm110047

7. Using the steering wheel puller, remove the steering wheel.
8. Remove the steering column shroud (See Steering Column Shroud Removal & Installation in Section 11 Steering).

Downloaded from www.Manualslib.com manuals search engine

9. Disconnect the multi-function switch electrical connector and remove the multi-function switch.
10. Disconnect the wiper and washer switch electrical connector and remove the wiper and washer switch.
11. Remove the spiral cable retaining bolts (1).
    (Tighten: Spiral cable bolts to 8 N·m)

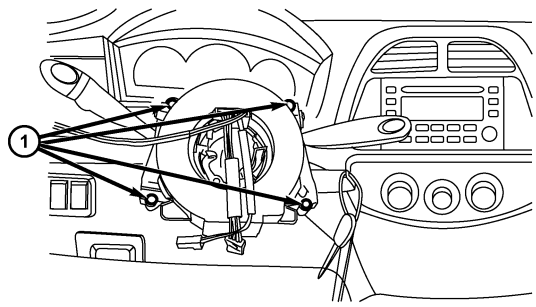

ltsm110041

12. Remove the instrument panel lower shroud bolts (1).

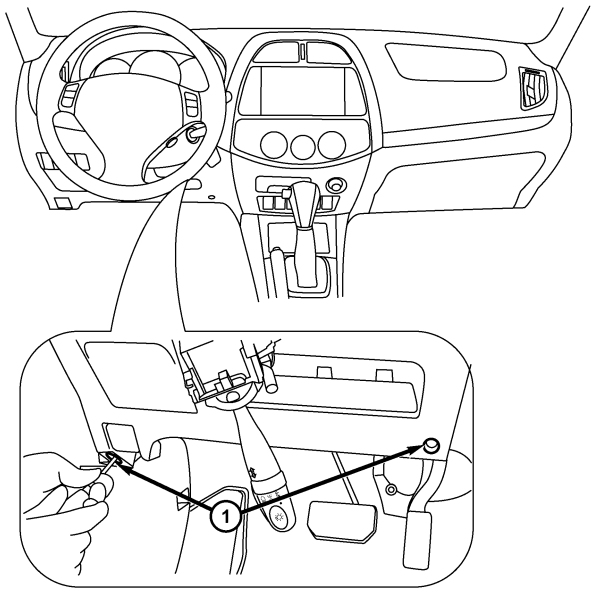

ltsm150088

13. Remove the upper mounting bolts (1) from the steering column.
    (Tighten: Steering column upper mounting bolts to 25 - 30 N·m)

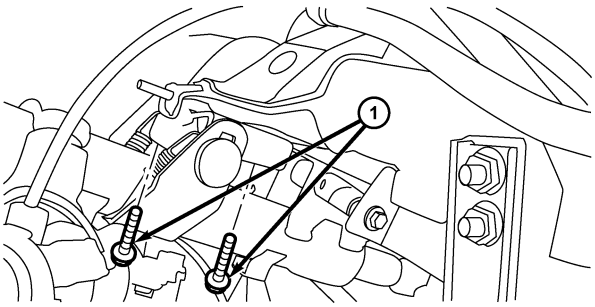

ltsm110020

Downloaded from www.Manualslib.com manuals search engine

14. Remove the lower mounting bolt (1) from the steering column.
    (Tighten: Steering column lower mounting bolt to 25 - 30 N·m)

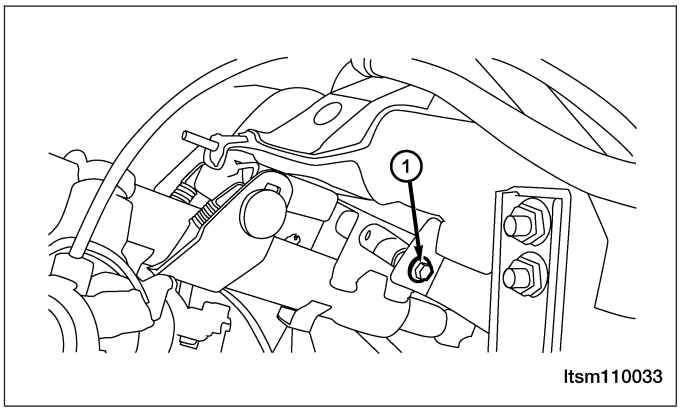

15. Remove the steering column floor bolts (1).
    (Tighten: Steering column floor bolts to 25 - 30 N·m)

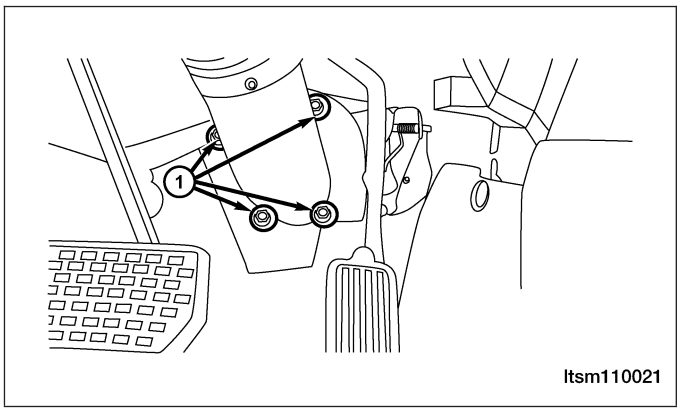

16. Remove the intermediate shaft lock bolt (1) that connects to the steering gear.
    (Tighten: Intermediate shaft lock bolt to 25 - 30 N·m)

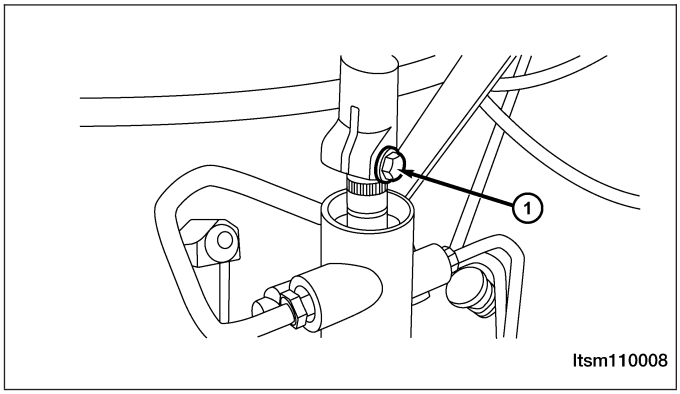

17. Remove the steering column assembly.
18. Installation is in the reverse order of removal.

Installation Notes:

- Check the steering shaft and universal joint for damage or wear. Check the clearance of universal joint and replace if necessary.
- Check the steering column seal cover. The distance to the groove button should be less than 1.00 mm, replace if necessary.
- Verify the airbag system is operating properly after the repair is complete.
- When installing the spiral cable, slowly wind the spiral cable to the end of its travel and then unwind the spiral cable two and a half turns.

Downloaded from www.Manualslib.com manuals search engine

STEERING GEAR

GENERAL INFORMATION 11-19
- Description 11-19
- Operation 11-19
- Specifications 11-19
- Special Tool 11-19

DIAGNOSIS & TESTING 11-20
- Binding and Sticking Troubleshooting Chart 11-20
- Insufficient Assist / Poor Return To Center Troubleshooting Chart 11-20

ON-VEHICLE SERVICE 11-21

Steering Gear - LHD 11-21
- Removal & Installation 11-21

Steering Gear - RHD 11-25
- Removal & Installation 11-25

Tie Rod 11-29
- Removal & Installation 11-29
- Inspection 11-30

Downloaded from www.Manualslib.com manuals search engine

GENERAL INFORMATION

Description

The steering gear used is the rack-and-pinion type with power assist. It is mounted on the front suspension sub-frame. The outer ends of the outer tie rods attach to the front knuckles.

NOTE :
The power steering gear should not be serviced or adjusted. If a malfunction or steering fluid leak occurs with the steering gear, the complete steering gear needs to be replaced.

Operation

The steering wheel turns the pinion. The rack is a long flat bar with geared teeth on one side. The rack teeth mesh with the teeth on the pinion gear. Rotation of the pinion moves the rack from left to right and right to left. The tie rod then causes the wheels to turn to the left or right.

Specifications

Torque Specifications

DESCRIPTION	TORQUE (N·m)
Inlet / Outlet Pipe Nut	25 - 30
Intermediate Shaft Bolt	25 - 30
Steering Gear to Sub-Frame Bolts	70 - 80
Sub-Frame Assembly Bolts	180 ± 15
Tie Rod End Nut	32 - 38
Tie Rod Jam Nut	15
Wheel Mounting Nuts	110

Special Tool

Ball Joint Separator CH-10002	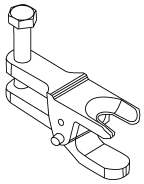 besm020086

11

Downloaded from www.Manualslib.com manuals search engine

Binding and Sticking Troubleshooting Chart

CONDITION	POSSIBLE CAUSES	CORRECTION
Difficult To Turn Wheel Sticks Or Binds	· Low fluid level. · Tire pressure. · Steering component. · Loose belt. · Low pump pressure. · Column shaft coupler binding. · Steering gear worn or out of adjustment. · Ball joints binding. · Belt routing.	· Fill to proper level. · Adjust tire pressure. · Inspect and lubricate. · Adjust or replace. · Pressure test and replace if necessary. · Replace coupler. · Repair or replace gear. · Inspect and repair if necessary. · Verify belt routing is correct.

Insufficient Assist / Poor Return To Center Troubleshooting Chart

CONDITION	POSSIBLE CAUSES	CORRECTION
Hard Turning Or Momentary Increase In Turning Effort	· Tire pressure. · Low fluid level. · Loose belt. · Lack of lubrication. · Low pump pressure or flow. · Internal gear leak. · Belt routing.	· Adjust tire pressure. · Fill to proper level. · Adjust or replace. · Inspect and lubricate steering and suspension components. · Pressure and flow test and repair if necessary. · Pressure and flow test, and repair if necessary. · Verify belt routing is correct.
Steering Wheel Does Not Want To Return To Center Position	· Tire pressure. · Wheel alignment. · Lack of lubrication. · High friction in steering gear. · Ball joints binding.	· Adjust tire pressure. · Align front wheels. · Inspect and lubricate steering and suspension components. · Test and adjust if necessary. · Inspect and repair if necessary.

Downloaded from www.Manualslib.com manuals search engine

ON-VEHICLE SERVICE

Steering Gear - LHD

Removal & Installation

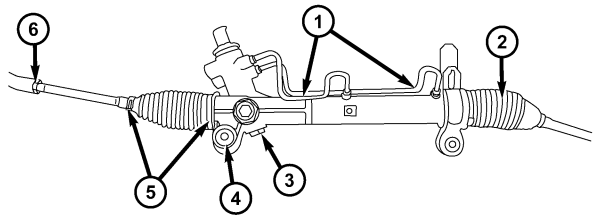

ltsm110036

1 - Steering Gear Inlet/Outlet Pipe	4 - Steering Gear Retaining Hole
2 - Dust Boot	5 - Clamp
3 - Steering Gear Lock Nut	6 - Tie Rod Lock Nut

NOTE :
The following special tools are required to perform the repair procedure:
- CH-10002 - Ball Joint Separator

1. Siphon out as much power steering fluid as possible from the reservoir.

WARNING!

Prolonged and repeated contact with power steering fluid will damage skin. If steering fluid is spilled on your skin, wash it off immediately with water.

11

2. Remove the wheel mounting nuts and wheel assemblies from both sides of the vehicle. (Tighten: Wheel mounting nuts to 110 N·m)
3. Remove the return hose clamp (1) from the steering liquid reservoir and insert the end of the hose into a container.

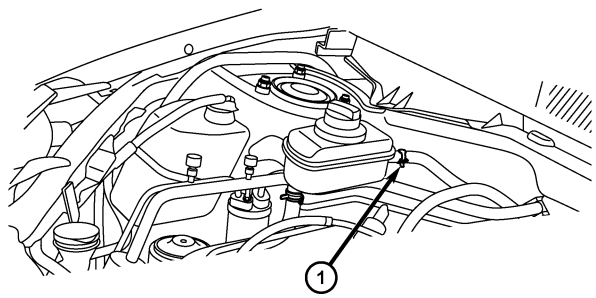

ltsm110042

4. Start the engine and turn the steering wheel from lock-to-lock until all power steering fluid has been drained from the system.
5. Stop the engine.
6. Raise and support the vehicle.

Downloaded from www.Manualslib.com manuals search engine

7. Remove the exhaust pipe assembly mounting bolts (1).
   (Tighten: Exhaust pipe assembly mounting bolts to 25 ± 3 N·m)

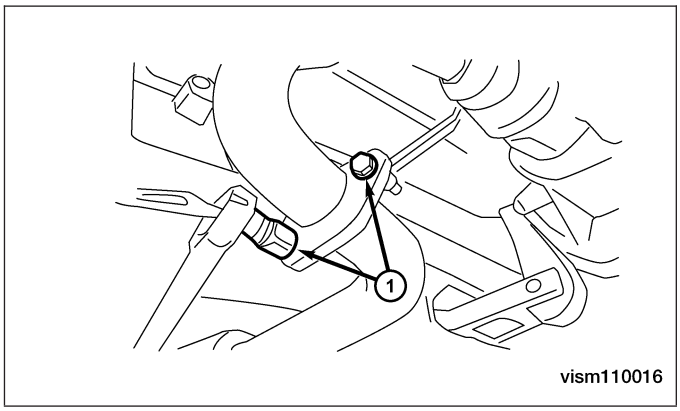

8. Remove the exhaust pipe assembly (See Exhaust Pipe Assembly Removal & Installation in Section 07 Exhaust).
9. Remove the high pressure and low pressure lines (1) from the steering gear.
   (Tighten: High pressure line to steering gear 27 - 33 N·m)
   (Tighten: Low pressure line to steering gear 27 - 33 N·m)

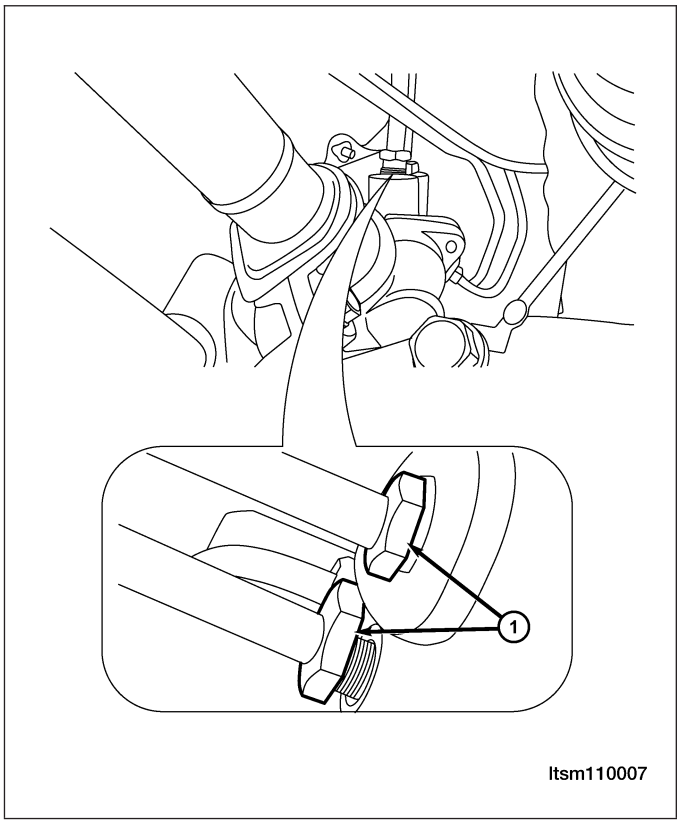

10. Remove the intermediate shaft coupling bolt (1) at the steering gear.
    (Tighten: Intermediate shaft coupling bolt to 25 - 30 N·m)

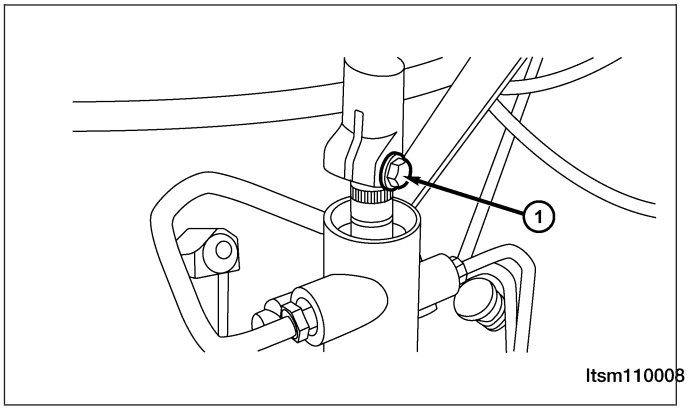

Downloaded from www.Manualslib.com manuals search engine

11. On each side of the steering gear, remove the nut (1) attaching the outer tie rod end to the steering knuckle.
(Tighten: Outer tie rod end nut to 32 - 38 N·m)

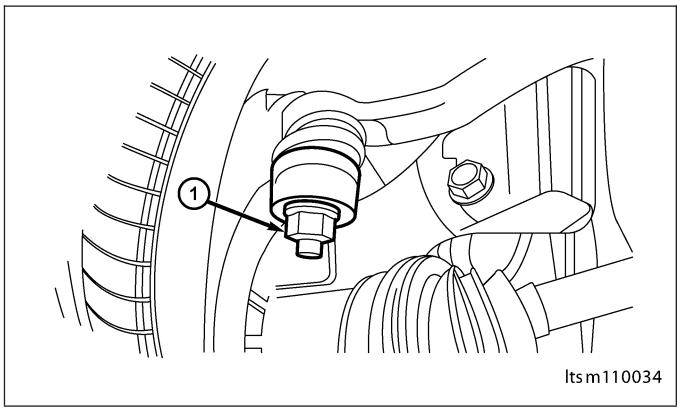

12. Using special tool CH-10002, separate the outer tie rod ends from both steering knuckles.

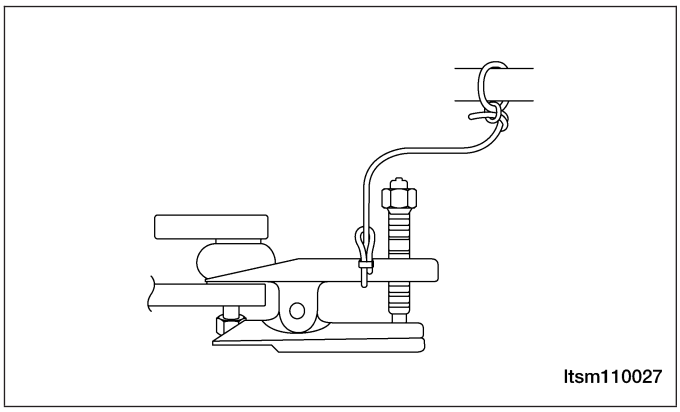

13. Remove the wheel speed sensor mounting bolt (1). (Tighten: Wheel speed sensor mounting bolt to 10 ± 1 N·m)
14. Remove the wheel speed sensor and set it aside.

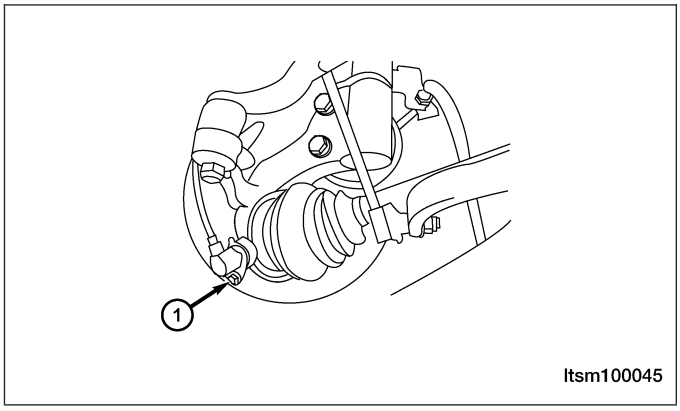

Downloaded from www.Manualslib.com manuals search engine

15. Remove the bolts (1) between the steering gear and the sub-frame.
    (Tighten: Steering gear and sub-frame bolt to 70 - 80 N·m)

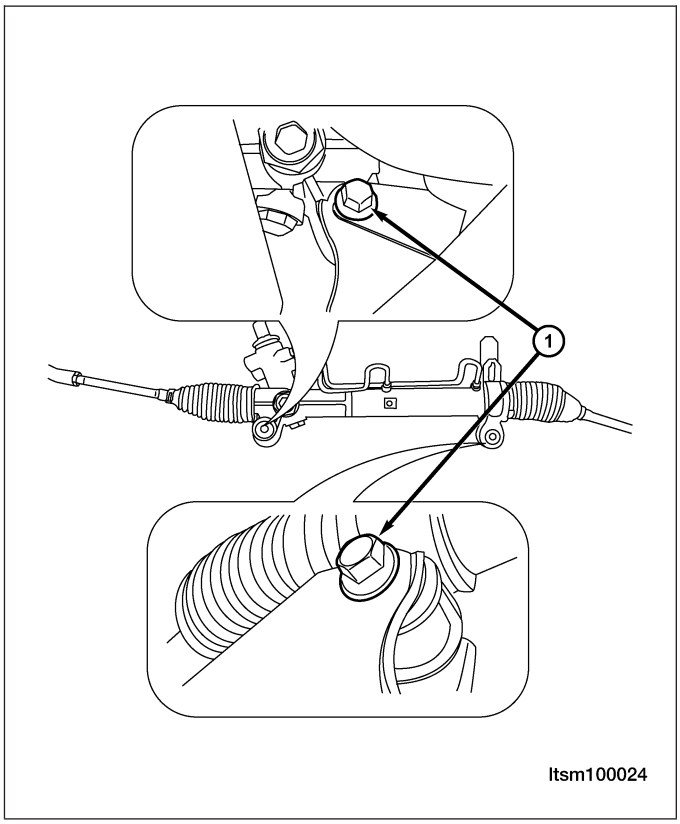

16. Support the engine using a suitable tool.
17. Remove the engine front and rear mounts (See Engine Mounts Removal & Installation in Section 02 Engine).
18. Remove the sub-frame mounting bolts (1) (4 total) between the sub-frame assembly and the vehicle body.
    (Tighten: Sub-frame mounting bolts to 180 ± 15 N·m)

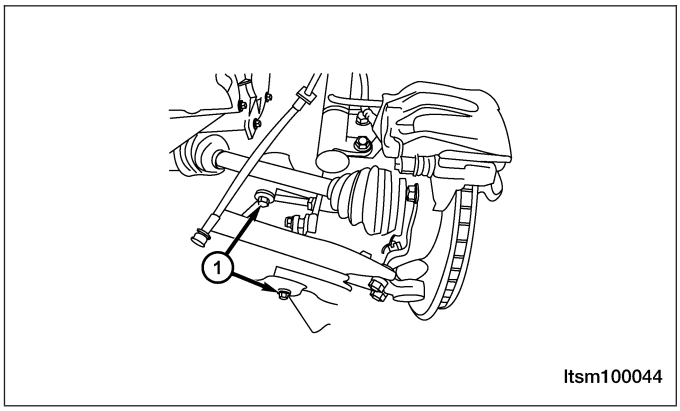

NOTE :
Before removing the front suspension sub-frame from the vehicle, the location of the sub-frame must be marked on the body of the vehicle. Do this so the sub-frame can be relocated, upon reinstallation, against the body of vehicle in the same location as before removal. If the front suspension sub-frame is not reinstalled in exactly the same location as before removal, the preset front wheel alignment settings (caster and camber) may be lost.

19. Using a jack, slowly lower the sub-frame enough to access the intermediate shaft coupling at the steering gear pinion shaft.
20. Remove the steering gear assembly.
21. Installation is in the reverse order of removal.

Installation Notes:

- After installing the new steering gear, perform a front end alignment procedure to reset the toe-in (See Front Wheel Alignment in Section 10 Suspension).

Downloaded from www.Manualslib.com manuals search engine

Steering Gear - RHD

Removal & Installation

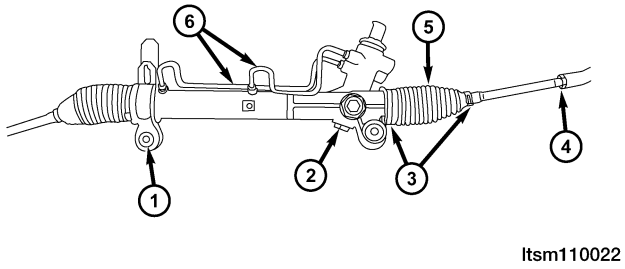

1 - Steering Gear Inlet/Outlet Pipe	4 - Steering Gear Retaining Hole
2 - Dust Boot	5 - Clamp
3 - Steering Gear Lock Nut	6 - Tie Rod Lock Nut

NOTE :
The following special tool is required to perform the repair procedure:
- CH-10002 - Ball Joint Separator

1. Siphon out as much power steering fluid as possible from the reservoir.

WARNING!

Prolonged and repeated contact with power steering fluid will damage skin. If steering fluid is spilled on your skin, wash it off immediately with water.

2. Remove the wheel mounting nuts and the wheel assemblies from both sides of the vehicle. (Tighten: Wheel mounting nuts to 110 N·m)
3. Remove the return hose clamp (1) from the steering liquid reservoir and insert the end of the hose into a container.

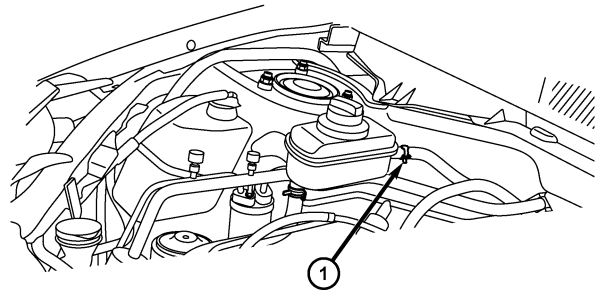

4. Start the engine and turn the steering wheel from lock-to-lock until all power steering fluid has been drained from the system.
5. Stop the engine.
6. Raise and support the vehicle.

Downloaded from www.Manualslib.com manuals search engine

7. Remove the exhaust pipe assembly mounting bolts (1).
   (Tighten: Exhaust pipe assembly mounting bolts to 25 ± 3 N·m)

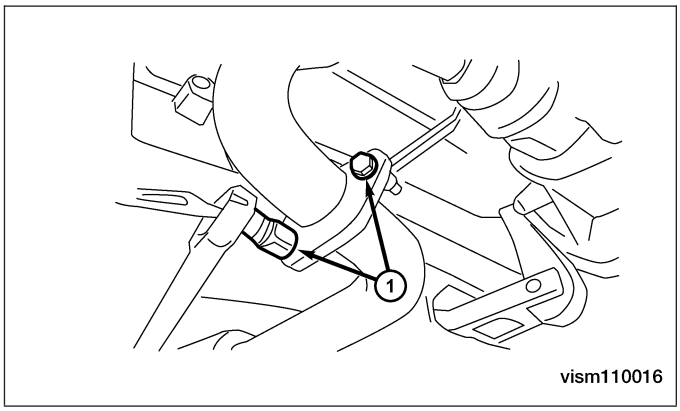

8. Remove the exhaust pipe assembly (See Exhaust Pipe Assembly Removal & Installation in Section 07 Exhaust).
9. Remove the high pressure and low pressure lines (1) from the steering gear.
   (Tighten: High pressure line to steering gear 27 - 33 N·m)
   (Tighten: Low pressure line to steering gear 27 - 33 N·m)

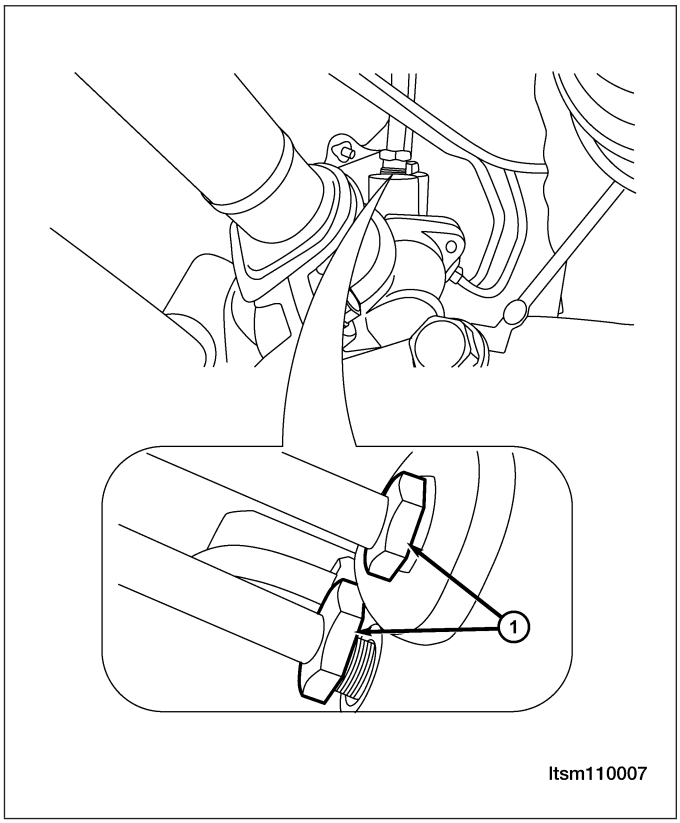

10. Remove the intermediate shaft coupling bolt (1) at the steering gear.
    (Tighten: Intermediate shaft coupling bolt to 25 - 30 N·m)

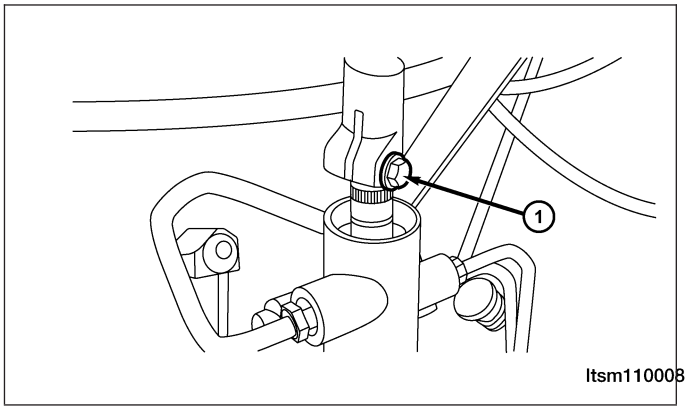

Downloaded from www.Manualslib.com manuals search engine

11. On each side of the steering gear, remove the nut (1) attaching the outer tie rod end to the steering knuckle.
(Tighten: Outer tie rod end nut to 32 - 38 N·m)

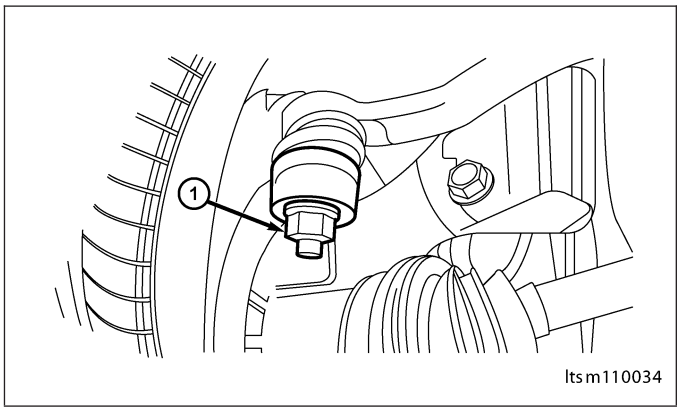

12. Using special tool CH-10002, separate the outer tie rod ends from both steering knuckles.

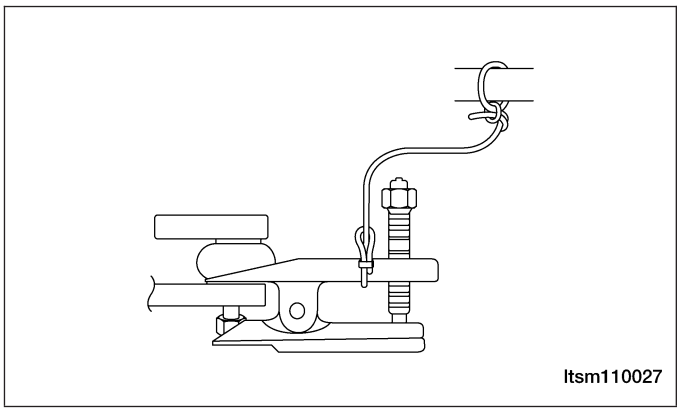

13. Remove the wheel speed sensor mounting bolt (1). (Tighten: Wheel speed sensor mounting bolt to 10 ± 1 N·m)
14. Remove the wheel speed sensor and set it aside.

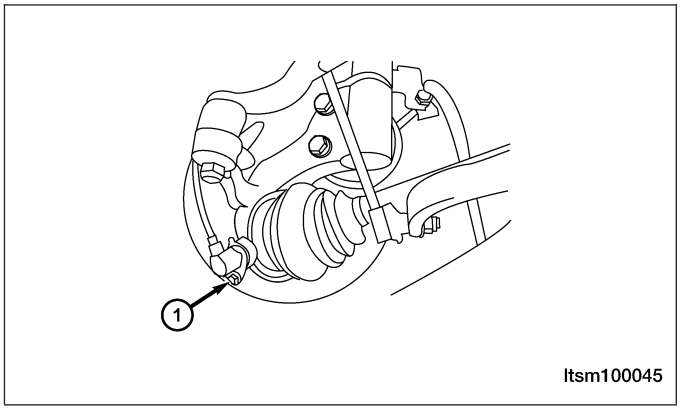

Downloaded from www.Manualslib.com manuals search engine

15. Remove the bolts (1) between the steering gear and the sub-frame.
    (Tighten: Steering gear and sub-frame bolt to 70 - 80 N·m)

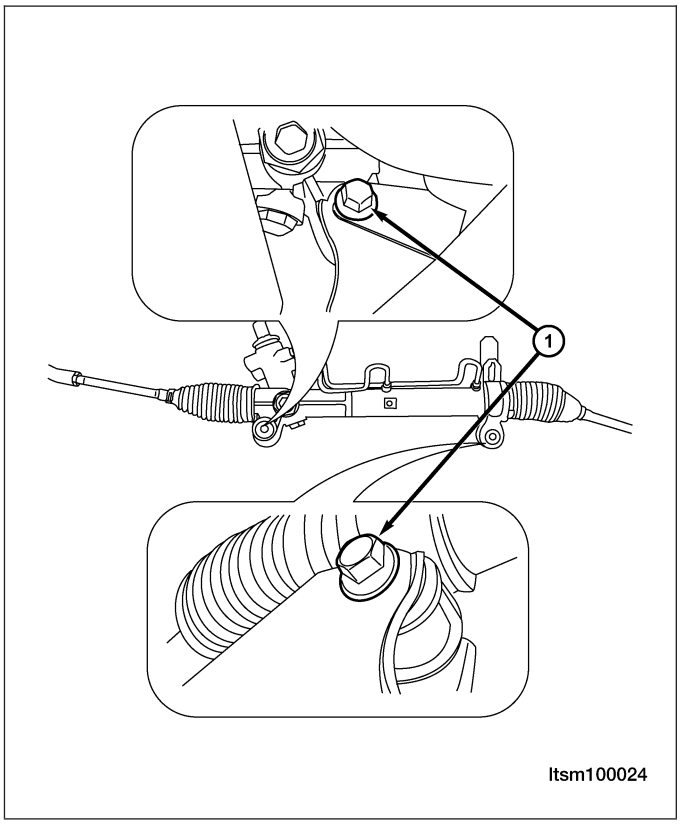

16. Support the engine using a suitable tool.
17. Remove the engine front and rear mounts (See Engine Mounts Removal & Installation in Section 02 Engine).
18. Remove the sub-frame mounting bolts (1) (4 total) between the sub-frame assembly and the vehicle body.
    (Tighten: Sub-frame mounting bolts to 180 ± 15 N·m)

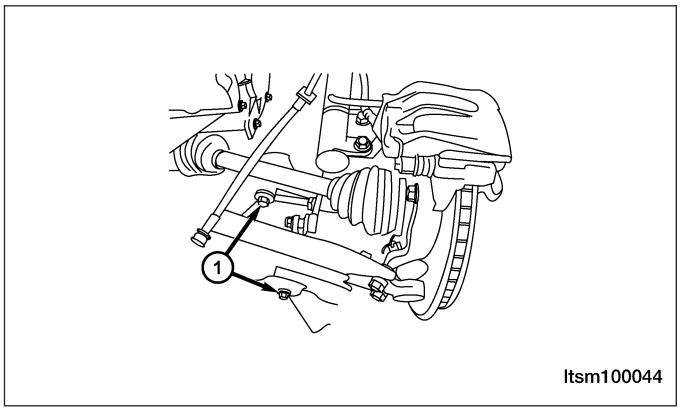

NOTE :
Before removing the front suspension sub-frame from the vehicle, the location of the sub-frame must be marked on the body of the vehicle. Do this so the sub-frame can be relocated, upon reinstallation, against the body of vehicle in the same location as before removal. If the front suspension sub-frame is not reinstalled in exactly the same location as before removal, the preset front wheel alignment settings (caster and camber) may be lost.

19. Using a jack, slowly lower the sub-frame enough to access the intermediate shaft coupling at the steering gear pinion shaft.
20. Remove the steering gear assembly.
21. Installation is in the reverse order of removal.

Installation Notes:

- After installing the new steering gear, perform a front end alignment procedure to reset the toe-in (See Front Wheel Alignment in Section 10 Suspension).

Downloaded from www.Manualslib.com manuals search engine

Tie Rod

Removal & Installation

NOTE :
The following special tool is required to perform the repair procedure:
- CH-10002 - Ball Joint Separator

1. Raise and support the vehicle.
2. Remove the wheel mounting nuts and the wheel assembly.
   (Tighten: Wheel mounting nuts to 110 N·m)
3. Loosen the tie rod jam nut (1).
   (Tighten: Tie rod jam nut to 15 N·m)

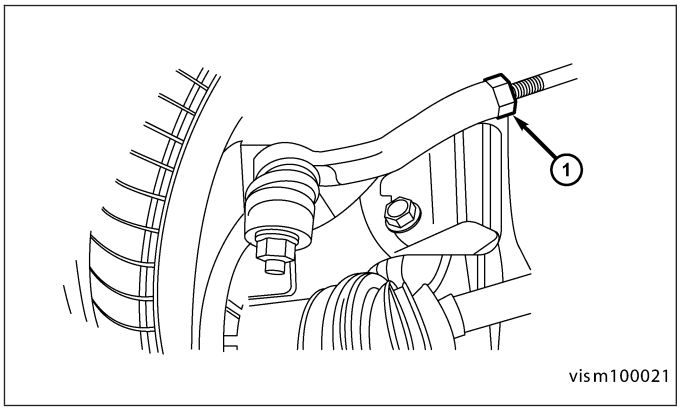

4. Remove the nut (1) attaching the outer tie rod end to the steering knuckle.
   (Tighten: Outer tie rod end nut to 32 - 38 N·m)

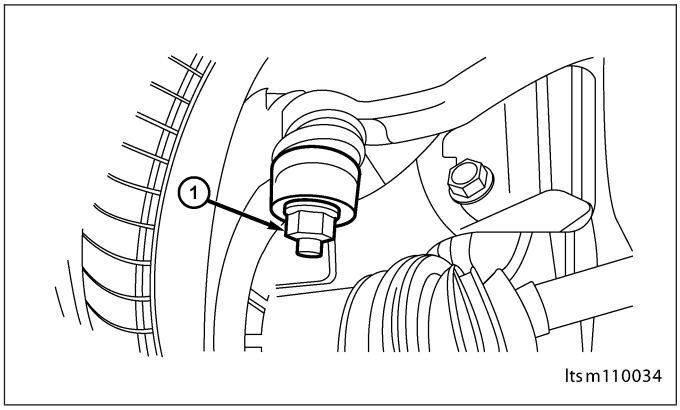

5. Using special tool CH-10002, separate the outer tie rod end from the steering knuckle.
6. Remove the outer tie rod end from the steering rack.

NOTE :
When removing the outer tie rod end, count the number of revolutions when removing. This will aid in installation, getting the toe setting close to where it needs to be when setting the final toe-in wheel alignment.

7. Installation is in the reverse order of removal.

Installation Notes:
- After installing the new tie rod end, perform a front end alignment procedure to reset the toe-in (See Front Wheel Alignment in Section 10 Suspension).

Downloaded from www.Manualslib.com manuals search engine

Inspection

1. Use special tool CH-10002 to disconnect the steering tie rod from the knuckle.

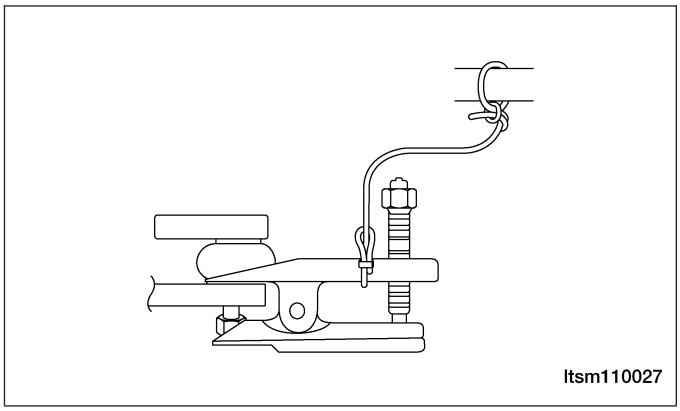

2. When the starting torque exceeds the standard value, replace the steering tie rod end.
   - Standard value: 0.98 - 3.92 N·m
3. When the starting torque is less than the standard value, inspect the ball joint for excessive play or wear problem. If there is no problem found, the ball joint can be used.

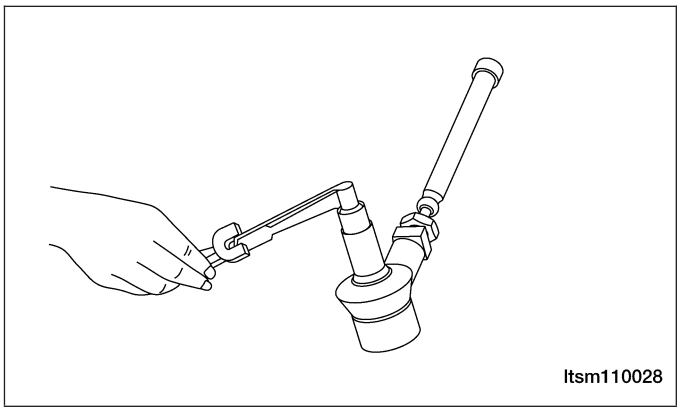

Downloaded from www.Manualslib.com manuals search engine

POWER STEERING PUMP

GENERAL INFORMATION 11-32
Description 11-32
Operation 11-32
Specifications 11-32

DIAGNOSIS & TESTING 11-33
Steering System Noise Troubleshooting Chart 11-33
Insufficient Assist / Poor Return To Center Troubleshooting Chart 11-33

ON-VEHICLE SERVICE 11-34

Power Steering Pump - 1.6L & 1.8L & 2.0L 11-34
Removal & Installation 11-34

Power Steering Pump - 2.4L 11-35
Removal & Installation 11-35

Power Steering Fluid Reservoir 11-36
Removal & Installation 11-36

Power Steering Pressure and Return Lines - 1.6L & 1.8L & 2.0L 11-37
Removal & Installation 11-37

Power Steering Pressure and Return Lines - 2.4L 11-39
Removal & Installation 11-39

Downloaded from www.Manualslib.com manuals search engine

GENERAL INFORMATION

Description

The power steering pump is a constant flow rate and displacement vane type pump. The pump reservoir is detached from the pump body. The pump is connected to the steering gear by the pressure and return lines.

Operation

The power steering pump is mounted to the engine and driven by the engine accessory drive belt. Power steering fluid enters the pump from the reservoir. The power steering fluid is then trapped between the pump vanes and moved to the high-pressure side of the pump creating a flow of steering fluid. The restriction of this flow by the steering gear creates the pressure that provides the steering assist.

CAUTION:

- **Operating the power steering with a low steering fluid level will damage the power steering system.**
- **Holding the steering wheel in the full lock position for more than 3 seconds will damage the power steering system.**

Specifications

Torque Specifications

DESCRIPTION	TORQUE (N·m)
Power Steering Pressure Line To Steering Gear	27 - 33
Power Steering Return Line To Steering Gear	27 - 33
Power Steering Pressure Line To Power Steering Pump	40 - 50
Power Steering Pump Mounting Bolts	20 - 30
Pressure/Return Hose Routing Clamp Screws To Cross Member	10 - 15

Fluid Specifications

DESCRIPTION	CAPACITY (L)
Power Steering Fluid (ATF III)	1.1

Downloaded from www.Manualslib.com manuals search engine

Steering System Noise Troubleshooting Chart

CONDITION	POSSIBLE CAUSES	CORRECTION
Hiss Or Whistle Sound When Turning Steering Wheel	· Steering intermediate shaft to dash panel seal. · Noisy valve in power steering gear.	· Check and repair seal at dash panel. · Replace steering gear.
Rattle Or Clunk	· Gear mounting bolts loose. · Loose or damaged suspension components. · Loose or damaged steering linkage. · Internal gear noise. · Pressure hose in contact with other components.	· Tighten bolts to specification. · Inspect and repair suspension. · Inspect and repair steering linkage. · Replace gear. · Reposition hose.
Chirp Or Squeal	· Loose belt. · Belt routing.	· Adjust or replace. · Verify belt routing is correct.
Whine Or Growl	· Low fluid level. · Pressure hose in contact with other components. · Internal pump noise. · Air in the system.	· Fill to proper level. · Reposition hose. · Replace pump. · Perform pump initial operation.
Sucking Air Sound	· Loose return line clamp. · O-ring missing or damaged on hose fitting. · Low fluid level. · Air leak between pump and reservoir.	· Replace clamp. · Replace O-ring. · Fill to proper level. · Repair if necessary.
Scrubbing Or Knocking	· Wrong tire size. · Wrong gear.	· Verify tire size. · Verify gear.

Insufficient Assist / Poor Return To Center Troubleshooting Chart

CONDITION	POSSIBLE CAUSES	CORRECTION
Hard Turning Or Momentary Increase In Turning Effort	· Tire pressure. · Low fluid level. · Loose belt. · Lack of lubrication. · Low pump pressure or flow. · Internal gear leak. · Belt routing.	· Adjust tire pressure. · Fill to proper level. · Adjust or replace. · Inspect and lubricate steering and suspension components. · Pressure and flow test and repair if necessary. · Pressure and flow test, and repair if necessary. · Verify belt routing is correct.
Steering Wheel Does Not Want To Return To Center Position	· Tire pressure. · Wheel alignment. · Lack of lubrication. · High friction in steering gear. · Ball joints binding.	· Adjust tire pressure. · Align front end. · Inspect and lubricate steering and suspension components. · Test and adjust if necessary. · Inspect and repair if necessary.

Downloaded from www.Manualslib.com manuals search engine

Power Steering Pump - 1.6L & 1.8L & 2.0L

Removal & Installation

1. Siphon as much steering fluid as possible from the power steering fluid reservoir.
2. Raise and support the vehicle.
3. Remove the engine cover.
4. Remove the drive belt (See Accessory Drive Belt Removal & Installation in Section 02 Engine).
5. Remove the high pressure (1) and low pressure lines (2) from the power steering pump (drain steering fluid from lines).
   (Tighten: High pressure line to power steering pump 40 - 50 N·m)
   (Tighten: Low pressure line to power steering pump 40 - 50 N·m)

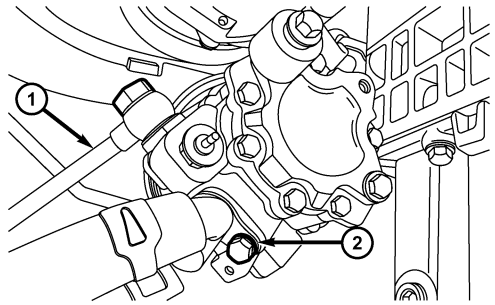

besm110011

6. Remove the three power steering pump mounting bolts (1).
   (Tighten: Power steering pump bolts to 20 - 30 N·m)
7. Remove the power steering pump.
8. Installation is in the reverse order of removal.

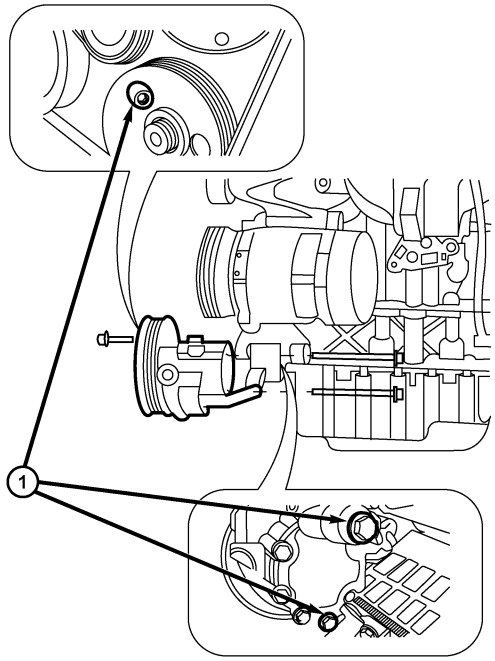

ltsm110045

Downloaded from www.Manualslib.com manuals search engine

Power Steering Pump - 2.4L

Removal & Installation

1. Siphon out as much power steering fluid as possible from the reservoir.
2. Raise and support the vehicle.
3. Remove the return hose clamp (1) from the steering liquid reservoir and insert the end of the hose into a container.

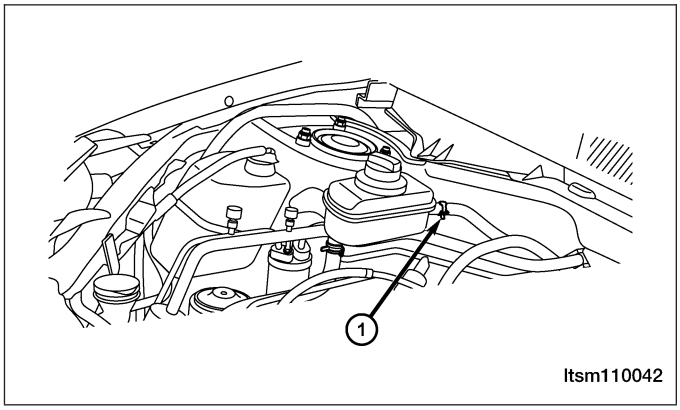

4. Start the engine and turn the steering wheel from lock-to-lock until all power steering fluid has been drained from the system.
5. Stop the engine.
6. Remove the engine lower shield.
7. Loosen the power steering pump belt adjustment bolt (1).

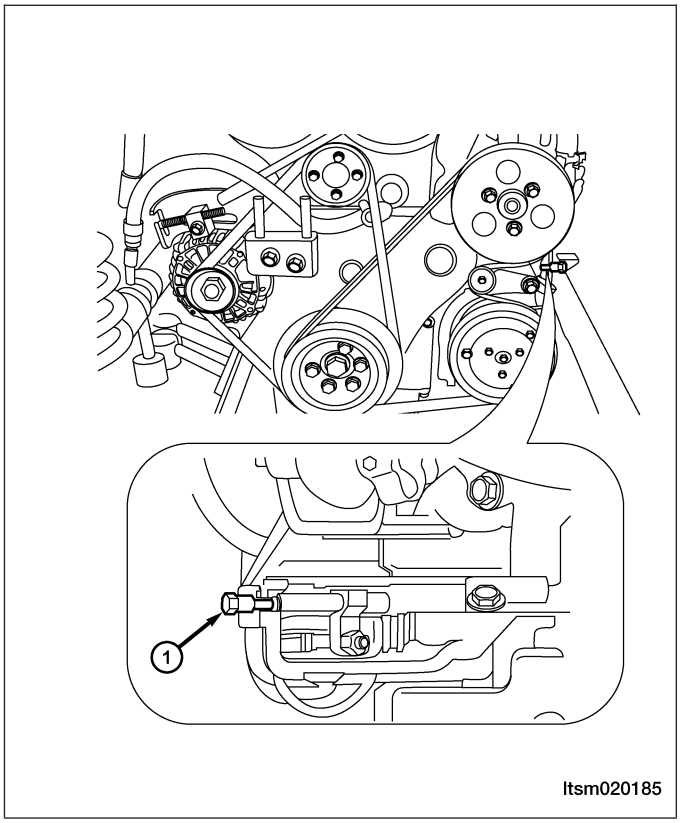

Downloaded from www.Manualslib.com manuals search engine

8. Remove the power steering pump inlet hose clamp (1), and then remove the pump inlet hose.
9. Remove the pump outlet pipe bolt (2).

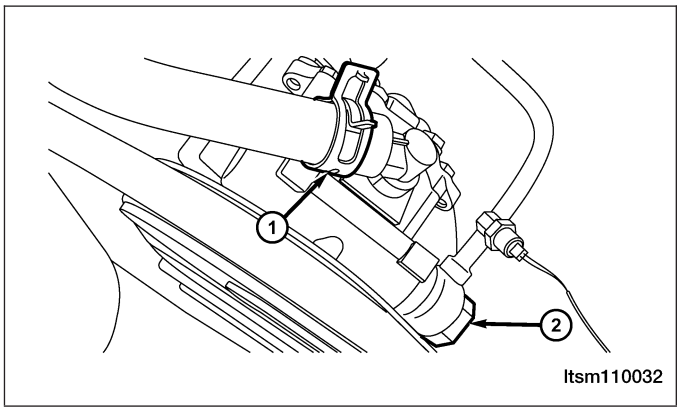

10. Rotate the steering pump pulley until the bolt (1) access hole lines up with the bolt.
11. Remove the power steering pump retaining bolt. (Tighten: Power steering pump bolt to 20 - 30 N·m)

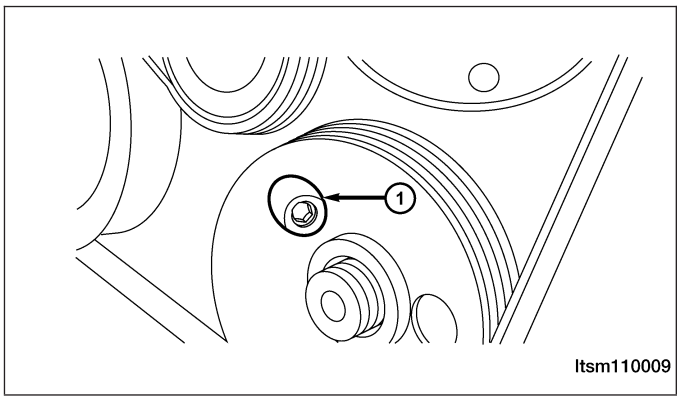

12. Remove the two bolts (1) on the other side of the power steering pump.
(Tighten: Power steering pump bolts to 20 - 30 N·m)

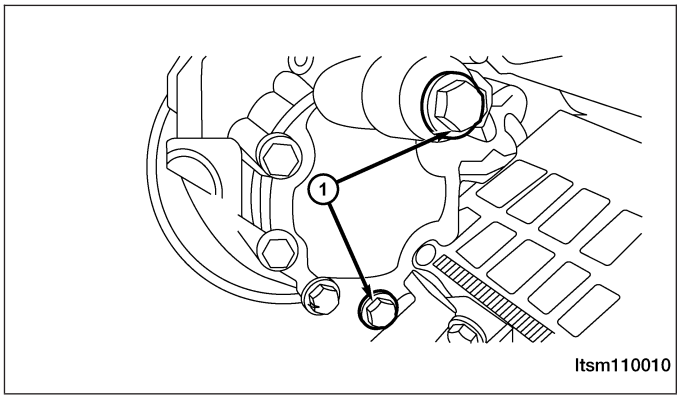

13. Remove the steering pump from the engine bracket.
14. Installation is in the reverse order of removal.

Installation Notes:

- Fill the power steering reservoir to the proper level.
- Check the system for leaks.

Power Steering Fluid Reservoir

Removal & Installation

1. Siphon as much steering fluid as possible from the power steering fluid reservoir.

Downloaded from www.Manualslib.com manuals search engine

2. Remove the hose clamps (1) securing the return hose and the supply hose to the steering fluid reservoir fitting.

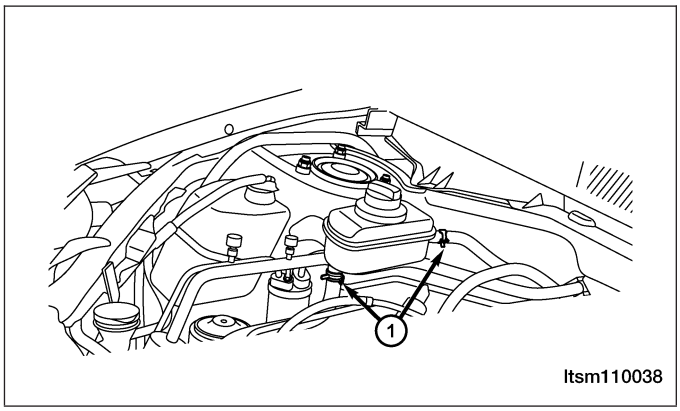

3. Slide the hose off the end of the reservoir fitting and remove the steering fluid reservoir.

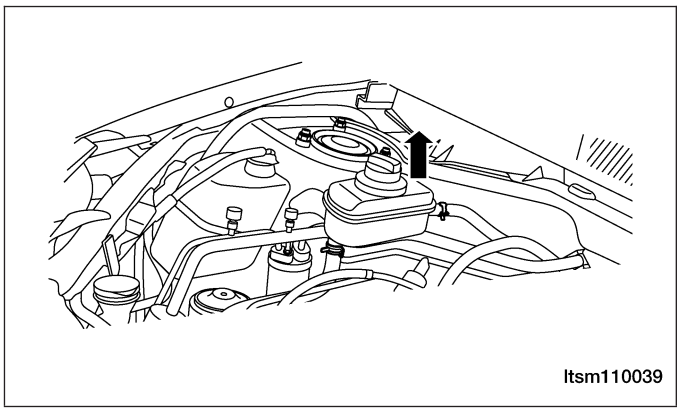

4. Installation is in the reverse order of removal.

Installation Notes:

- Fill the power steering reservoir to the proper level.
- Check the system for leaks.

Power Steering Pressure and Return Lines - 1.6L & 1.8L & 2.0L

Removal & Installation

1. Siphon as much steering fluid as possible from the power steering fluid reservoir.
2. Remove the engine cover.
3. Remove the hose clamps securing the return hose and the supply hose to the steering fluid reservoir fitting.
4. Remove the high pressure (1) and low pressure lines (2) from the power steering pump (drain steering fluid from lines).
   (Tighten: High pressure line to power steering pump 40 - 50 N·m)
   (Tighten: Low pressure line to power steering pump 40 - 50 N·m)

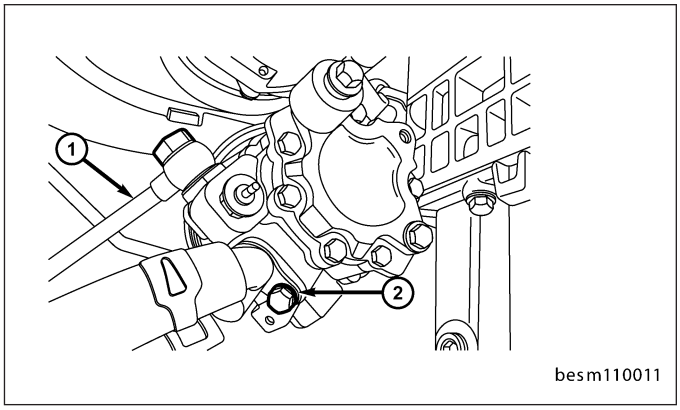

Downloaded from www.Manualslib.com manuals search engine

5. Remove the high pressure and low pressure lines (1) from the steering gear (drain steering fluid from lines).
   (Tighten: High pressure line to power steering pump 27 - 33 N·m)
   (Tighten: Low pressure line to power steering pump 27 - 33 N·m)

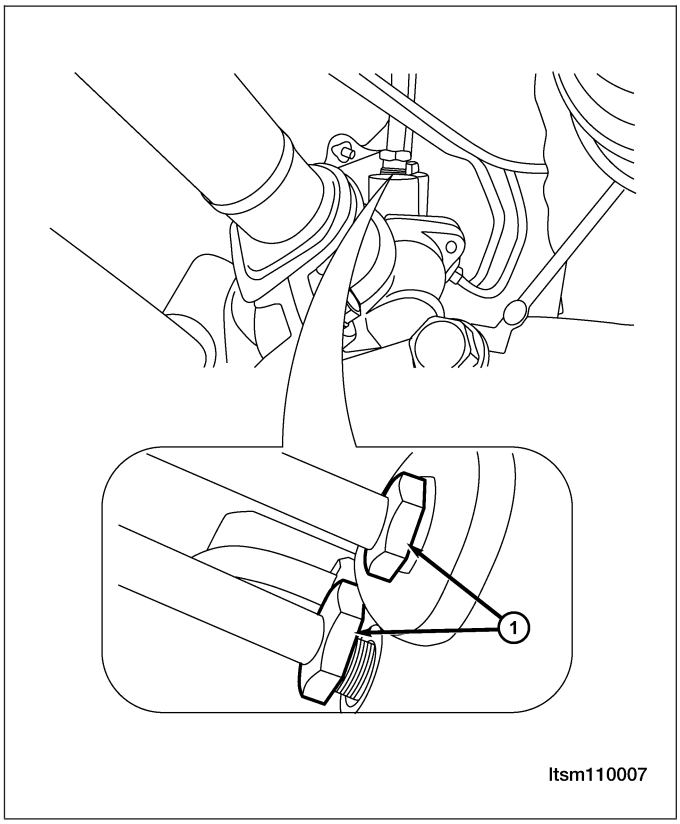

6. Remove the power steering line clamp bracket bolt (1) from the pressure and return lines.
   (Tighten: Power steering line clamp bracket bolt to 10 N·m)

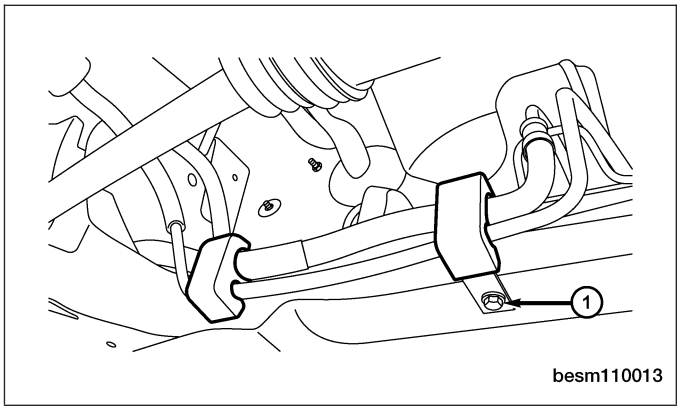

7. Remove the pressure and return lines.
8. Installation is in the reverse order of removal.

Installation Notes:

- Fill the power steering reservoir to the proper level.
- Check the system for leaks.

Downloaded from www.Manualslib.com manuals search engine

Power Steering Pressure and Return Lines - 2.4L

Removal & Installation

1. Siphon as much steering fluid as possible from the power steering fluid reservoir.
2. Remove the hose clamps (1) securing the return hose and the supply hose to the steering fluid reservoir fitting.

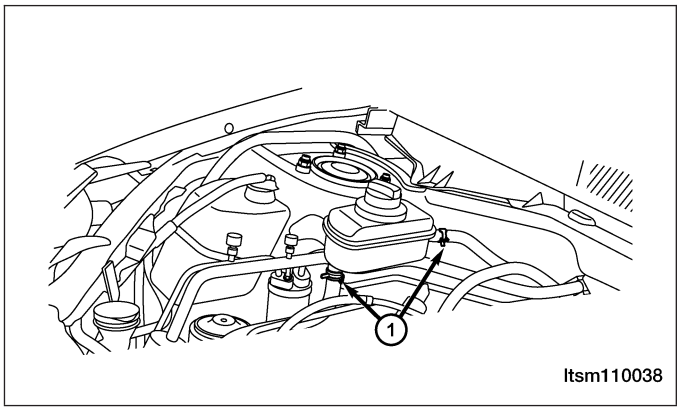

3. Remove the pressure and return hoses.
4. Disconnect the power steering switch electrical connector.
5. Remove the bolt (2) from the pressure line and remove the clamp (1) from the return hose.

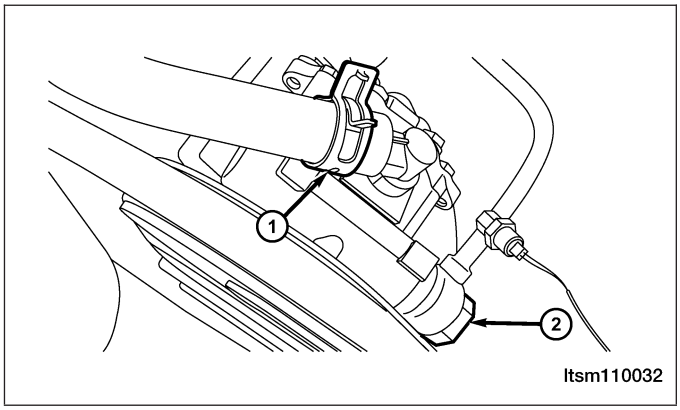

Downloaded from www.Manualslib.com manuals search engine

6. Remove the high pressure and low pressure lines (1) from the steering gear.
   (Tighten: High pressure line to steering gear 27 - 33 N·m)
   (Tighten: Low pressure line to steering gear 27 - 33 N·m)

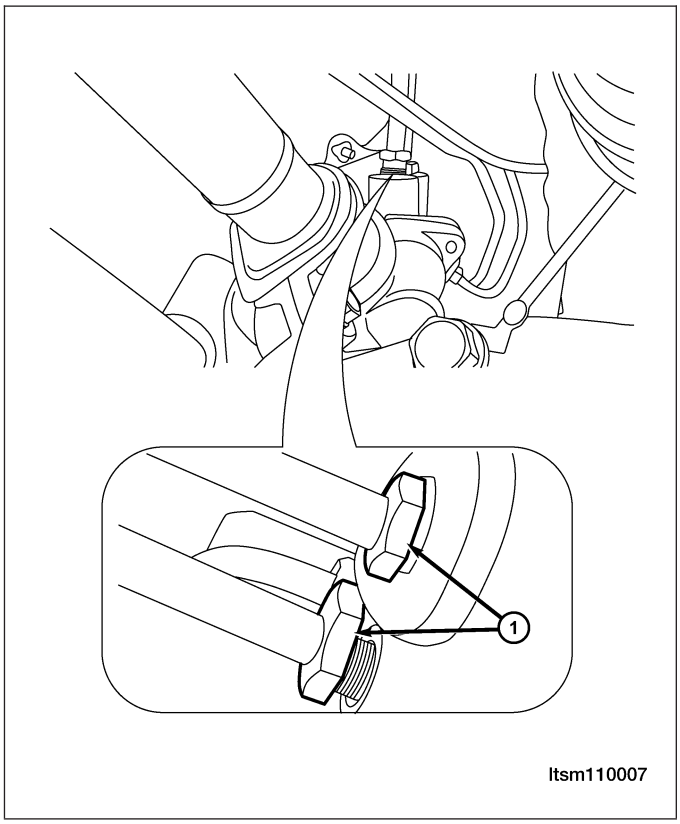

7. Installation is in the reverse order of removal.

Installation Notes:

- Fill the power steering reservoir to the proper level.
- Check the system for leaks.

Downloaded from www.Manualslib.com manuals search engine

BRAKES
12

CONTENTS

page

Base Brakes 12-1

Antilock Brakes 12-34

Parking Brake 12-79

BASE BRAKES

GENERAL INFORMATION 12-2
- Description 12-2
- Operation 12-3
- Specifications 12-4
- Special Tools 12-5
- Electrical Schematics 12-6

DIAGNOSIS & TESTING 12-7
- Diagnostic Help 12-7
- Brake Noise 12-7
- Braking Concerns 12-8

ON-VEHICLE SERVICE 12-9

Brake Bleeding 12-9
- Brake Bleeding Information 12-9
- Brake Bleeding Procedure 12-9
- Manual Brake Bleeding 12-9
- Pressure Brake Bleeding 12-10

Master Cylinder - LHD 12-11
- Description 12-11
- Operation 12-11
- Removal & Installation 12-11

Master Cylinder - RHD 12-12
- Description 12-12
- Operation 12-13
- Removal & Installation 12-13

Power Brake Booster - LHD 12-14
- Description 12-14
- Operation 12-14
- Removal & Installation 12-14

Power Brake Booster - RHD 12-16
- Description 12-16
- Operation 12-16
- Removal & Installation 12-16

Front Brake Caliper 12-18
- Description 12-18
- Operation 12-18
- Removal & Installation 12-19

Rear Brake Caliper 12-19
- Description 12-19
- Operation 12-20
- Removal & Installation 12-20

Front Brake Rotor 12-21
- Removal & Installation 12-21
- Inspection 12-21

Rear Brake Rotor 12-22
- Removal & Installation 12-22
- Inspection 12-22

Rear Brake Backing Plate 12-23
- Removal & Installation 12-23

Front Brake Pads 12-24
- Removal & Installation 12-24
- Inspection 12-25

Rear Brake Pads 12-25
- Removal & Installation 12-25
- Inspection 12-26

UNIT REPAIR 12-27

Front Brake Caliper 12-27
- Disassemble 12-27
- Inspection 12-28
- Assemble 12-28

Rear Brake Caliper 12-30
- Disassemble 12-30
- Inspection 12-31
- Assemble 12-32

Downloaded from www.Manualslib.com manuals search engine

GENERAL INFORMATION

Description

Base Brakes

The base brake system consists of the following components:
- Brake pedal
- Power brake booster
- Master cylinder
- Brake tubes and hoses
- Disc brakes (front)
- Disc brakes (rear)
- Parking brake
- Parking brake shoes (rear)

Front Disc Brake

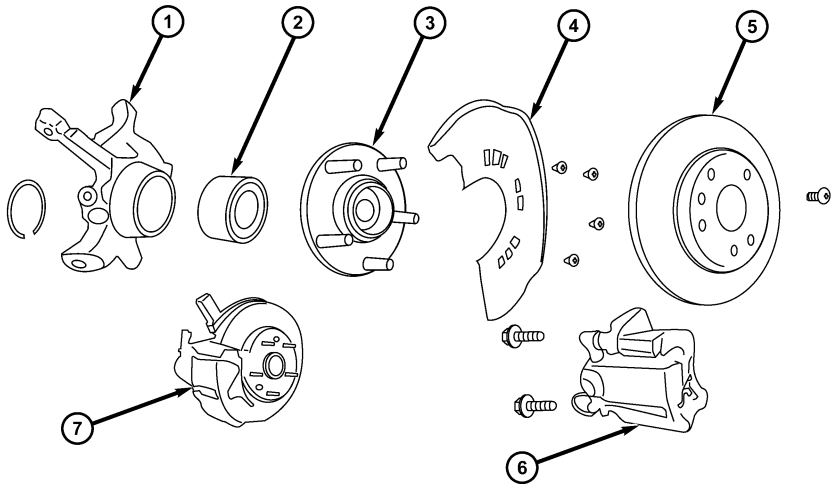

ltsm120001

1 - Front Wheel Knuckle	5 - Front Brake Rotor
2 - Knuckle Hub Bearing	6 - Brake Caliper Assembly
3 - Front Wheel Hub Assembly	7 - Disc Brake Caliper and Rotor Assembly
4 - Dust Shield	

The front disc brake assembly consists of the following major components:
- Caliper
- Caliper adapter bracket
- Brake pads
- Rotor

Downloaded from www.Manualslib.com manuals search engine

Rear Disc Brake

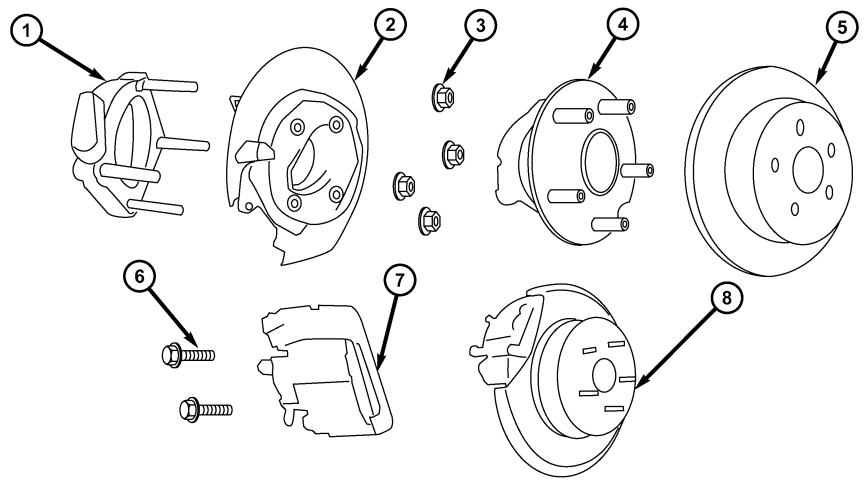

1 - Rear Hub Mounting Assembly	5 - Rear Brake Rotor
2 - Rear Brake Assembly	6 - Caliper Bolts
3 - Lock Nut	7 - Brake Caliper Assembly
4 - Rear Wheel Hub Bearing Unit	7 - Disc Brake Caliper and Rotor Assembly

The rear disc brake assembly consists of the following major components:
- Caliper
- Caliper adapter bracket
- Brake pads
- Rotor
- Parking brake shoes

CAUTION:
- **Use DOT 4 brake fluid or equivalent from a tightly sealed container. Do not use petroleum-based fluids, which will cause seal damage in the brake system.**
- **Brake fluid will damage painted surfaces. If brake fluid is spilled on any painted surfaces, wash it off immediately with water.**
- **Never use gasoline, kerosene, alcohol, motor oil, transmission fluid, or any fluid containing mineral oil to clean system components. These fluids damage rubber cups and seals.**
- **During service procedures, grease or any other foreign material must be kept off the caliper assembly, brake pads, brake rotor and external surfaces of the hub.**
- **When handling the brake rotor and caliper, be careful to avoid damaging the brake rotor and caliper, and scratching or nicking the brake shoe lining.**

Operation

Applying the brake pedal uses lever action to push a rod into the brake booster, which through the use of vacuum, boosts the force of the rod and then transmits this force into the master cylinder. This produces hydraulic pressure in the master cylinder. On vehicles not equipped with ABS, the hydraulic pressure is transmitted by brake fluid through the brake tubes to the individual brake calipers or wheel cylinders. On vehicles equipped with ABS, the hydraulic pressure is transmitted by brake fluid through the brake tubes to the ABS hydraulic control unit (HCU), which then distributes that pressure to the individual brake calipers and wheel cylinders. The brake calipers use hydraulic pressure to apply the brake pads. The application of the brake pads or shoes will cause the rotation of the wheels to slow or stop depending on how much brake pressure is applied. The parking brakes carry out the same function except that they are mechanically actuated by a cable that connects only to the rear brakes.

Downloaded from www.Manualslib.com manuals search engine

Specifications

Torque Specifications

DESCRIPTION	TORQUE (N·m)
Dust Shield Bolts	6.5 - 8.5
Locating Screws (Brake Rotor)	6 - 12
Brake Flex Hose Fitting - Front Caliper	19
Brake Flex Hose Banjo Bolt - Rear Caliper	20
Brake Pedal/Booster Mounting Nuts	25
Brake Tube Nuts	10
Disc Brake Caliper Adapter Bracket (To Knuckle) - Front	63
Disc Brake Caliper Adapter Bracket (To Support) - Rear	63
Disc Brake Caliper Guide Pin Bolts - Front	31 - 38
Disc Brake Caliper Guide Pin Bolts - Rear	23
Disc Brake Caliper Bleeder Screw	9 - 11
Fluid Reservoir Mounting Screw	11
Master Cylinder Mounting Nuts	23
Parking Brake Lever Mounting Nuts	6 - 12
Rear Brake Backing Plate Bolts	20
Wheel Mounting Nuts	110

Rotor Specifications

BRAKE ROTOR	ROTOR THICKNESS	MINIMUM ROTOR THICKNESS	ROTOR DIAMETER	ROTOR RUNOUT
Front Rotor	25 mm	23 mm	265 mm	0.1 mm
Rear Rotor	9 mm	7 mm	303 mm	0.1 mm

Brake Pad/Lining Specifications

Front Brake

APPLICATION	SPECIFICATION (mm)
Brake Caliper Piston Diameter	57
Brake Rotor Diameter	265
Brake Rotor Thickness (New)	25
Min. Thickness Of Brake Rotor	23
Maximum Rotor Runout	0.1
Front Brake Pad Thickness (New)	17.8
Min. Thickness Of Front Brake Pad	7

Downloaded from www.Manualslib.com manuals search engine

Rear Brake

APPLICATION	SPECIFICATION (mm)
Brake Rotor Diameter	303
Brake Rotor Thickness (New)	9
Min. Thickness Of Brake Rotor	7
Rear Brake Pad Thickness (New)	15
Min. Thickness Of Rear Brake Pad	7
Thickness Of Parking Brake Lining	2.5
Min. Thickness Of Parking Brake Lining	1.5

Special Tools

Dial Indicator	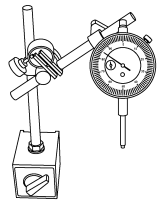 besm120026
Digital Multimeter Fluke 15B & 17B	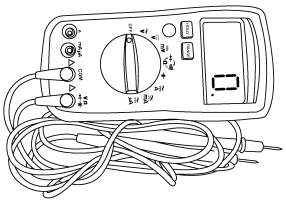 besm030002

Downloaded from www.Manualslib.com manuals search engine

Electrical Schematics

Brake System (Page 1 of 1)

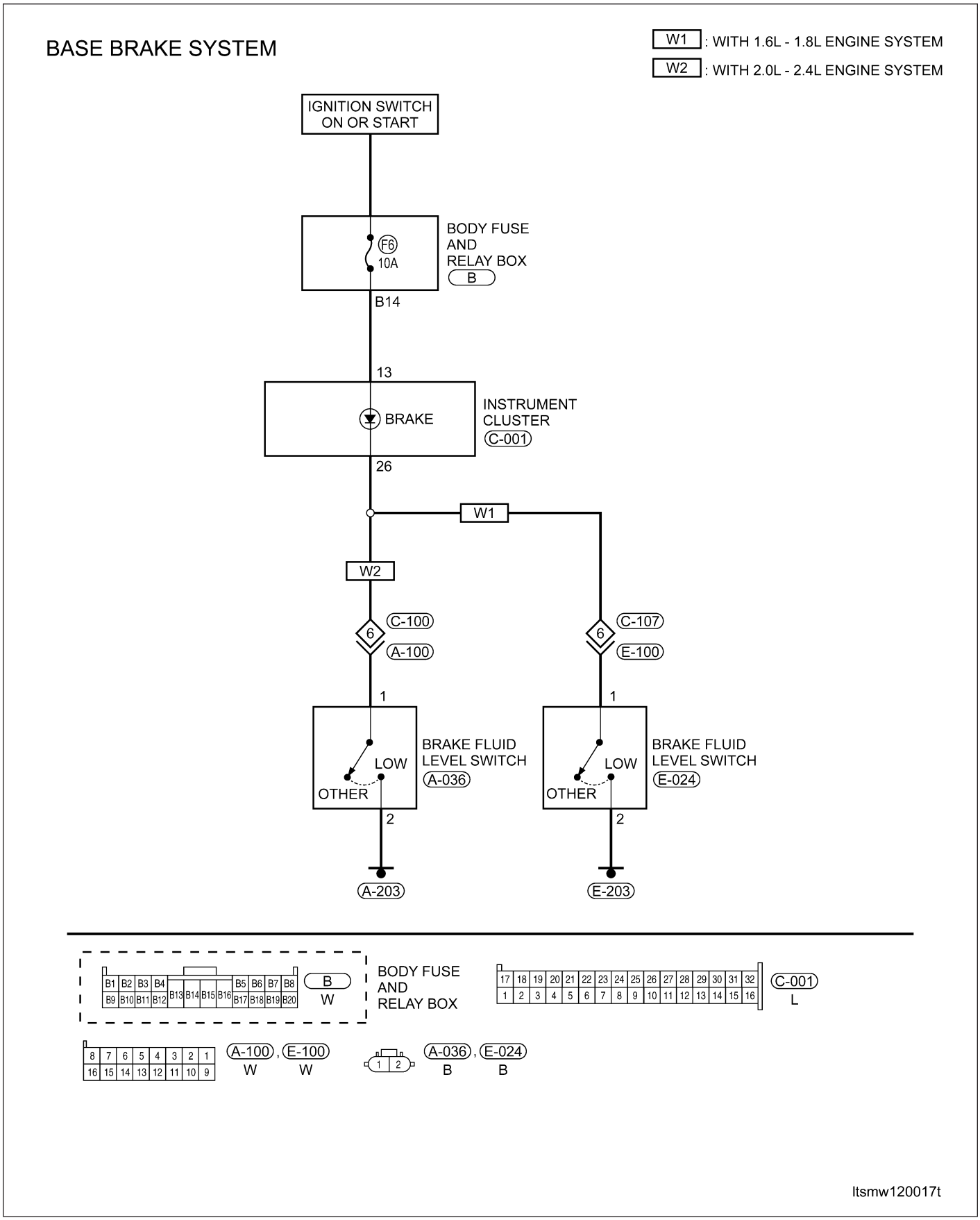

Downloaded from www.Manualslib.com manuals search engine

DIAGNOSIS & TESTING

Diagnostic Help

Brake diagnosis involves determining if the concern is related to a mechanical, hydraulic, electrical or vacuum operated component.

NOTE :
The brake reservoir fluid level will decrease in proportion to normal lining wear.

NOTE :
Brake fluid tends to darken over time. This is normal and should not be mistaken for contamination.

Preliminary Brake Check:

- Check the condition of the tires and wheels. Damaged wheels and worn, damaged or under inflated tires can cause a pull, shudder, vibration and a condition similar to brake grab.
- If a complaint was based on noise while braking, check the suspension components. Jounce the front and the rear of vehicle and listen for anything that might be caused by a loose, worn or damaged suspension or steering component.
- Inspect the brake fluid level and condition.
  1. If the fluid level is abnormally low, look for any evidence of leaks at the calipers, brake lines, master cylinder and at the Antilock Brake System (ABS) Hydraulic Control Unit (HCU).
  2. If the fluid appears to be contaminated, drain a sample to examine.
- The system will have to be flushed if the fluid is separated into layers, or contains a substance other than brake fluid. The system seals, cups, hoses, master cylinder and HCU will also have to be replaced after flushing. Use clean brake fluid to flush the system.
- Check the parking brake operation. Verify free movement and full release of the cables and the lever. Also note if the vehicle was being operated with the parking brake partially applied.
- Check the brake pedal operation. Verify that the pedal does not bind and has adequate free play. If the pedal lacks free play, check the pedal and the power booster for looseness or for a binding condition. DO NOT road test the vehicle until the condition is located and corrected.
- Check the vacuum booster check valve and vacuum supply hose.
- If the preliminary checks appear to be OK, road test the vehicle.

Brake Noise

CONDITION	POSSIBLE CAUSES	CORRECTION
Disc Brake Chirp	· Excessive brake rotor runout. · Small particles	· Diagnose and correct as necessary.
Disc Brake Rattle Or Clunk	· Broken or missing spring clips. · Caliper guide pin bolts loose. · Missing abutment shims. · Small metal particles	· Replace brake pads. · Tighten guide pin bolts. · Replace missing abutment shims.
Disc Brake Squeak At Low Speed (While Applying Light Brake Pedal Effort)	· Brake shoe linings.	· Replace brake pads.
Scraping Or Whirring	· ABS wheel speed sensor hitting tone wheel.	· Inspect, correct or replace faulty component(s).

Downloaded from www.Manualslib.com manuals search engine

Braking Concerns

CONDITION	POSSIBLE CAUSES	CORRECTION
Excessive Pedal Effort	· Obstruction of brake pedal. · Low power brake booster assist. · Glazed brake pads. · Brake pad lining transfer to brake rotor.	· Inspect, remove or move obstruction. · Refer to Power Brake Booster in this section. · Resurface or replace brake rotors as necessary. Replace brake pads. · Resurface or replace brake rotors as necessary. Replace brake pads.
Excessive Pedal Effort (Hard Pedal Unable To Lock-Up Wheels)	· Power brake booster runout (vacuum assist).	· Check booster vacuum hose and engine tune for adequate vacuum supply.
Excessive Pedal Travel (Vehicle Stops OK)	· Air in brake lines.	· Bleed brakes.
Pedal Pulsates/Surges During Braking	· Disc brake rotor has excessive thickness variation.	· Isolate condition as rear or front. Resurface or replace brake rotors as necessary.
Pedal Is Spongy	· Air in brake lines.	· Bleed brakes.
Vehicle Pulls To Right Or Left On Braking	· Frozen brake caliper piston. · Contaminated brake pad/shoe lining (most likely front lining). · Pinched brake lines. · Leaking piston seal. · Suspension problem.	· Replace frozen piston or caliper. Bleed brakes. · Inspect and clean, or replace pads/shoes. Repair source of contamination. · Replace pinched line. · Replace piston seal or brake caliper. · See the Suspension section.
Parking Brake - Excessive Handle Travel	· Rear brakes out of adjustment.	· Adjust rear parking brake shoes on vehicles with rear disc brakes.

Downloaded from www.Manualslib.com manuals search engine

ON-VEHICLE SERVICE

Brake Bleeding

Brake Bleeding Information

WARNING!

When bleeding the brake system, wear safety glasses. A clear bleed tube must be attached to the bleeder screws and submerged in a clear container filled partially with clean brake fluid. Direct the flow of brake fluid away from yourself and the painted surfaces of the vehicle. Brake fluid at high pressure may come out of the bleeder screws when opened.

CAUTION:
Before removing the master cylinder cap, wipe it clean to prevent dirt and other foreign matter from dropping into the master cylinder reservoir. Use brake fluid or an equivalent from a fresh, tightly sealed container. Brake fluid must conform to DOT 4 specifications.

NOTE :
During the brake bleeding procedure, be sure the brake fluid level remains close to the ″MAX″ level in the master cylinder fluid reservoir. Check the fluid level periodically during the bleeding procedure and add brake fluid as required.

NOTE :
Do not pump the brake pedal at any time while having a bleeder screw open during the bleeding process. This will only increase the amount of air in the system and make additional bleeding necessary. Do not allow the master cylinder reservoir to run out of brake fluid while bleeding the system. An empty reservoir will allow additional air into the brake system. Check the fluid level frequently and add fluid as needed. The following wheel circuit sequence for bleeding the brake hydraulic system should be used to ensure adequate removal of all trapped air from the hydraulic system.

Brake Bleeding Procedure

The following wheel circuit sequence for bleeding the brake hydraulic system should be used to ensure adequate removal of all trapped air from the hydraulic system:
- Left rear wheel
- Right front wheel
- Right rear wheel
- Left front wheel

Manual Brake Bleeding

NOTE :
To bleed the brakes manually, the aid of a helper will be required.

Fill the brake master cylinder reservoir to the proper level with brake fluid.

Downloaded from www.Manualslib.com manuals search engine

NOTE :
Never allow the brake master cylinder to empty of brake fluid while bleeding the brake system.

Attach a clear plastic hose to the bleeder screw and feed the hose into a clear jar containing enough fresh brake fluid to submerge the end of the hose.

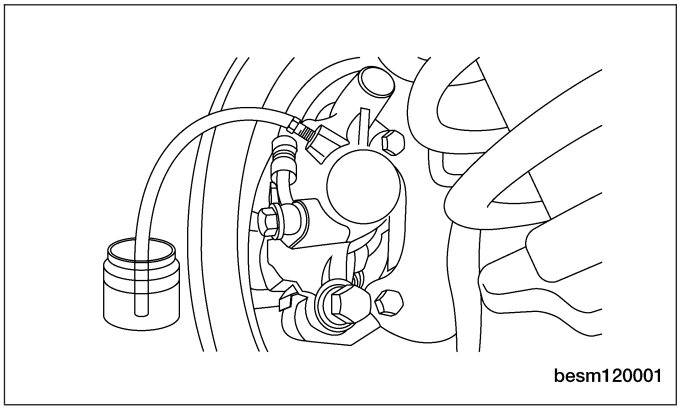

1. Turn the ignition switch off.
2. Have a helper pump the brake pedal three or four times and hold it in the down position.
3. With the pedal in the down position, open the bleeder screw at least one full turn.
4. Once the brake pedal has dropped, close the bleeder screw. After the bleeder screw is closed, release the brake pedal.
5. Repeat the above steps until all trapped air is removed from that wheel circuit (usually four or five times).
6. Bleed the remaining wheel circuits in the same manner until all air is removed from the brake system. Monitor the fluid level in the master cylinder reservoir to make sure it does not go dry.
7. Check and adjust brake fluid level to the ″MAX″ mark.
8. Check the brake pedal travel. If pedal travel is excessive or has not been improved, some air may still be trapped in the system. Re-bleed the brakes as necessary.
9. Test drive the vehicle to verify the brakes are operating properly and pedal feel is correct.

Pressure Brake Bleeding

NOTE :
Follow pressure bleeder manufacturer's instructions for use of pressure bleeding equipment.

Fill the brake master cylinder reservoir to the proper level with brake fluid.

Attach the pressure bleeding equipment to the master cylinder.

NOTE :
Never allow the brake master cylinder to empty of brake fluid while bleeding the brake system.

Attach a clear plastic hose to the bleeder screw and feed the hose into a clear jar containing enough fresh brake fluid to submerge the end of the hose.

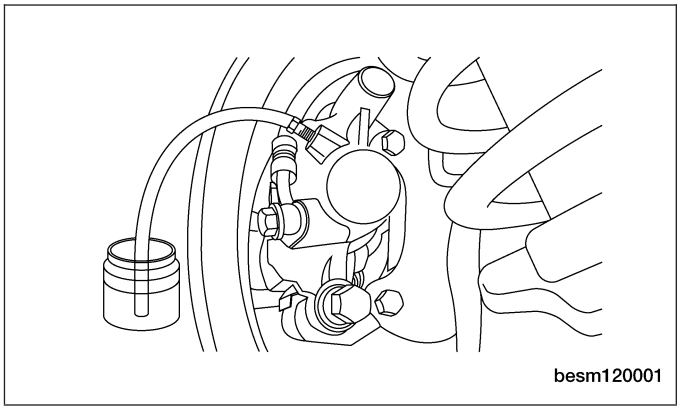

1. Turn the ignition switch off.
2. Open the bleeder screw at least one full turn or more to obtain a steady stream of brake fluid.
3. After approximately 120-240 ml of fluid has been bled through the brake circuit and an air-free flow is maintained in the clear plastic hose and jar, close the bleeder screw.
4. Repeat this procedure at all the remaining bleeder screws.
5. Check and adjust brake fluid level to the ″MAX″ mark on the reservoir.

Downloaded from www.Manualslib.com manuals search engine

6. Check the brake pedal travel. If pedal travel is excessive or has not been improved, some air may still be trapped in the system. Re-bleed the brakes as necessary.
7. Test drive the vehicle to verify the brakes are operating properly and pedal feel is correct.

Master Cylinder - LHD

Description

The master cylinder body is an anodized aluminum casting. It is located at the left side of the engine room. It has a machined bore to accept the master cylinder pistons and also has threaded ports with seats for hydraulic brake tube connections. The master cylinder has the brake fluid reservoir mounted on top of it and supplies brake fluid to the master cylinder as required. On manual transaxle equipped vehicles, the brake fluid reservoir also feeds the clutch hydraulic circuit. The reservoir is made of clear plastic and it houses the brake fluid level switch.

Operation

When the brake pedal is pressed, the master cylinder pistons apply brake pressure through the chassis brake tubes to each brake assembly. The brake fluid reservoir supplies the brake hydraulic system with the necessary fluid to operate properly.

Removal & Installation

CAUTION:

The vacuum in the power brake booster must be pumped down before removing the master cylinder to avoid damaging the master cylinder and to prevent the booster from sucking in any contamination. This can be done by pumping the brake pedal while the engine is not running until a firm brake pedal is achieved.

1. Turn the ignition switch off.
2. Siphon out as much brake fluid as possible from the master cylinder.
3. With the engine off, pump the brake pedal 4-5 strokes until the pedal feel is firm.
4. Disconnect the negative battery cable.
5. Disconnect the brake fluid level switch electrical connector in the master cylinder brake fluid reservoir.
6. Disconnect the brake tubes (1) at the master cylinder outlet ports. Install plugs at all of the open brake tube outlets on the master cylinder.
   (Tighten: Brake tube nuts to 10 N·m)

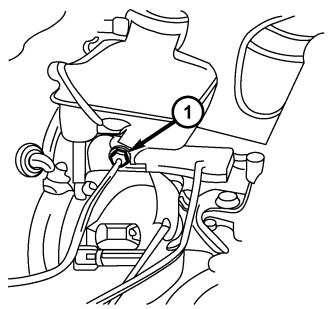

besm120006

Downloaded from www.Manualslib.com manuals search engine

7. If equipped with a manual transaxle, remove the clamp (1) and slide the clutch actuator hose off the reservoir port.

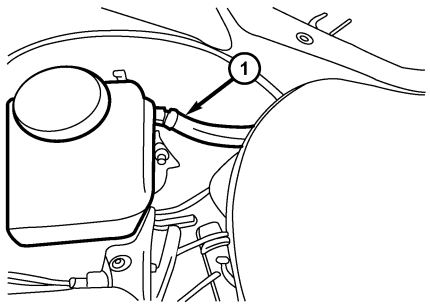

besm120007

8. Clean the area around where the master cylinder attaches to the power brake booster using a suitable brake cleaner such as Brake Parts Cleaner or an equivalent.
9. Disconnect the brake tubes (1) and remove the nuts (2) attaching the master cylinder to the power brake booster.
   (Tighten: Master cylinder mounting nuts to 23 N·m)

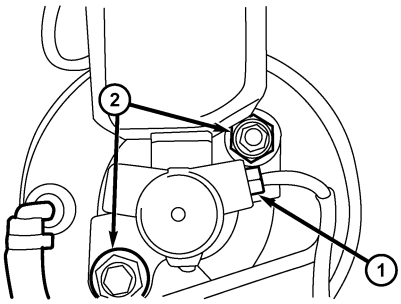

ltsm120041

10. Slide the master cylinder straight out of the power brake booster.

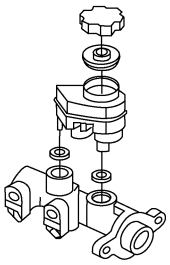
ltsm120005

11. Installation is in the reverse order of removal.

NOTE :
After installation, bleed the master cylinder or bleed the entire brake system as necessary.

Master Cylinder - RHD

Description

The master cylinder body is an anodized aluminum casting. It is located at the right side of the engine room. It has a machined bore to accept the master cylinder pistons and also has threaded ports with seats for hydraulic brake tube connections. The master cylinder has the brake fluid reservoir mounted on top of it and supplies brake fluid to the master cylinder as required. On manual transaxle equipped vehicles, the brake fluid reservoir also feeds the clutch hydraulic circuit. The reservoir is made of clear plastic and it houses the brake fluid level switch.

Downloaded from www.Manualslib.com manuals search engine

Operation

When the brake pedal is pressed, the master cylinder pistons apply brake pressure through the chassis brake tubes to each brake assembly. The brake fluid reservoir supplies the brake hydraulic system with the necessary fluid to operate properly.

Removal & Installation

CAUTION:

The vacuum in the power brake booster must be pumped down before removing the master cylinder to avoid damaging the master cylinder and to prevent the booster from sucking in any contamination. This can be done by pumping the brake pedal while the engine is not running until a firm brake pedal is achieved.

1. Turn the ignition switch off.
2. Siphon out as much brake fluid as possible from the master cylinder.
3. With the engine off, pump the brake pedal 4-5 strokes until the pedal feel is firm.
4. Disconnect the negative battery cable.
5. Disconnect the brake fluid level switch electrical connector in the master cylinder brake fluid reservoir.
6. Disconnect the brake tubes (1) at the master cylinder outlet ports. Install plugs at all of the open brake tube outlets on the master cylinder.
   (Tighten: Brake tube nuts to 10 N·m)

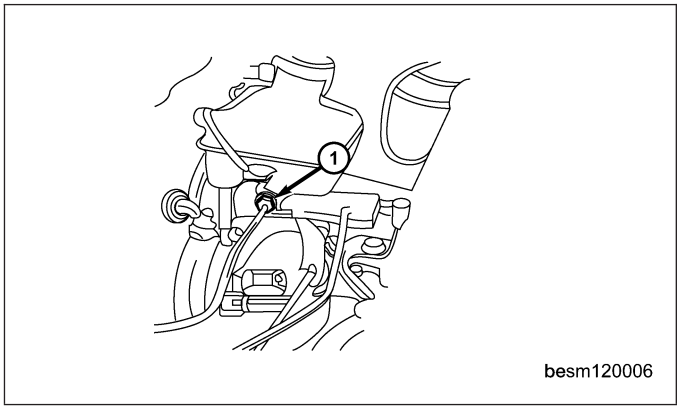

7. If equipped with a manual transaxle, remove the clamp (1) and slide the clutch actuator hose off the reservoir port.

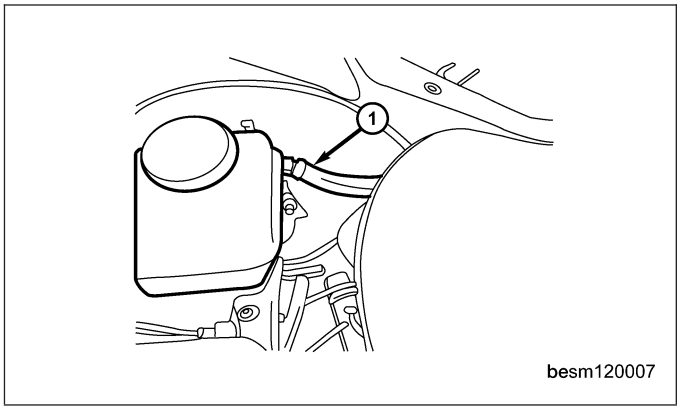

8. Clean the area around where the master cylinder attaches to the power brake booster using a suitable brake cleaner such as Brake Parts Cleaner or an equivalent.

Downloaded from www.Manualslib.com manuals search engine

9. Disconnect the brake tubes (1) and remove the nuts (2) attaching the master cylinder to the power brake booster.
   (Tighten: Master cylinder mounting nuts to 23 N·m)

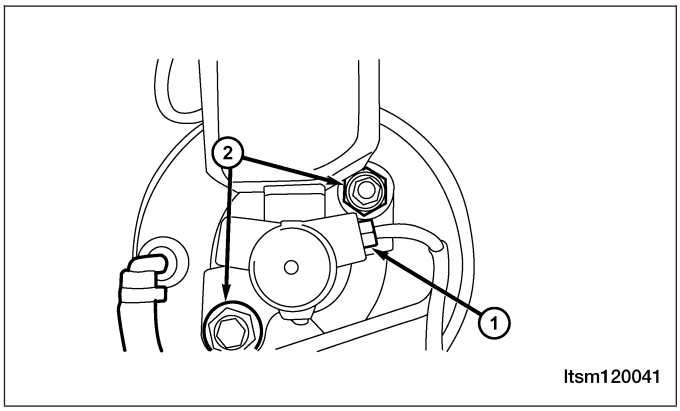

10. Slide the master cylinder straight out of the power brake booster.

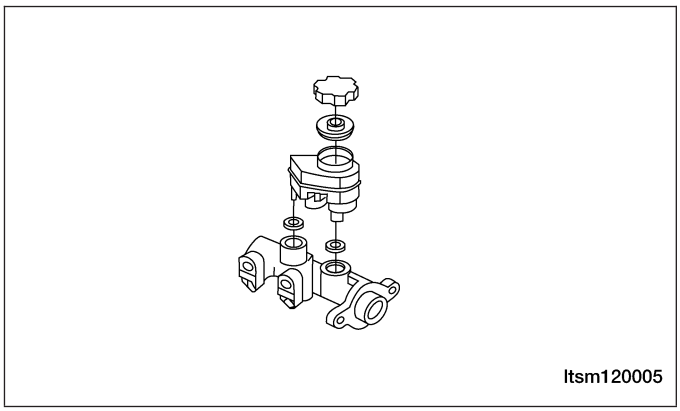

11. Installation is in the reverse order of removal.

NOTE :
After installation, bleed the master cylinder or bleed the entire brake system as necessary.

Power Brake Booster - LHD

Description

The power brake booster is mounted in the engine compartment on the left side of the dash panel. The master cylinder is bolted to the front of the booster.

Operation

A vacuum line connects the check valve to engine source vacuum. The booster input rod extends through the dash panel and connects to the brake pedal.

Removal & Installation

CAUTION:
The vacuum in the power brake booster must be pumped down before removing the master cylinder to avoid damaging the master cylinder and to prevent the booster from sucking in any contamination. This can be done by pumping the brake pedal while the engine is not running until a firm brake pedal is achieved.

1. Remove the master cylinder (See Master Cylinder Removal & Installation in Section 12 Brakes).

Downloaded from www.Manualslib.com manuals search engine

2. Remove the spring-type cotter pin (2) and clevis pin (1) from the brake booster rod (3).

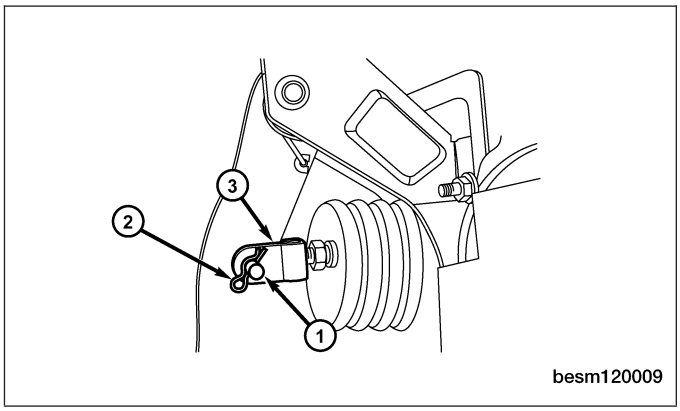

3. Remove the nuts and bolts (1) attaching the power brake booster to the brake pedal bracket.
(Tighten: Brake pedal/Power brake booster mounting nuts and bolts to 25 N·m)
4. Remove the brake pedal bracket.

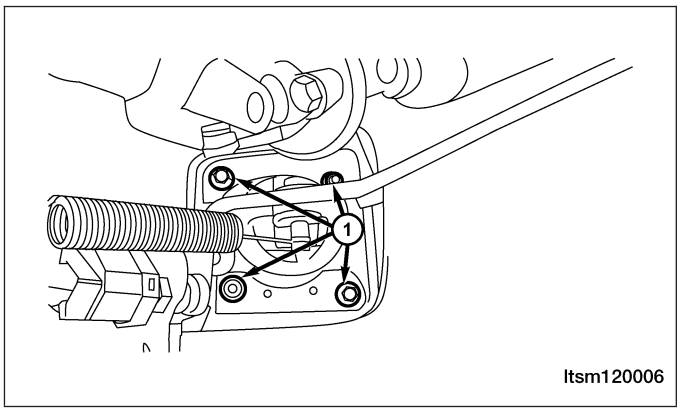

5. Disconnect the vacuum hose (1) from the check valve on the power brake booster.

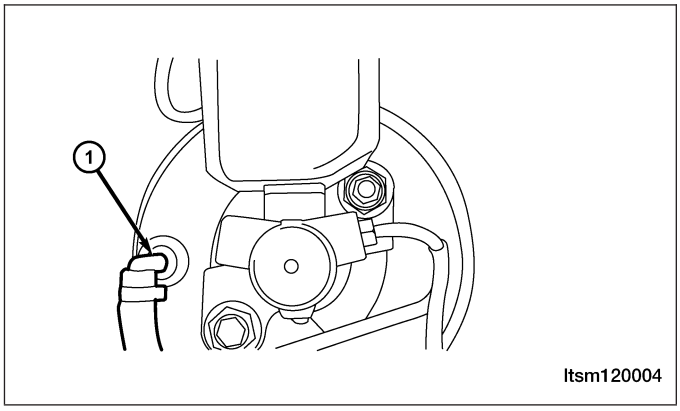

6. Slide the power brake booster (1) forward until its mounting studs clear the dash panel, then remove it through the engine compartment.
7. Installation is in the reverse order of removal.

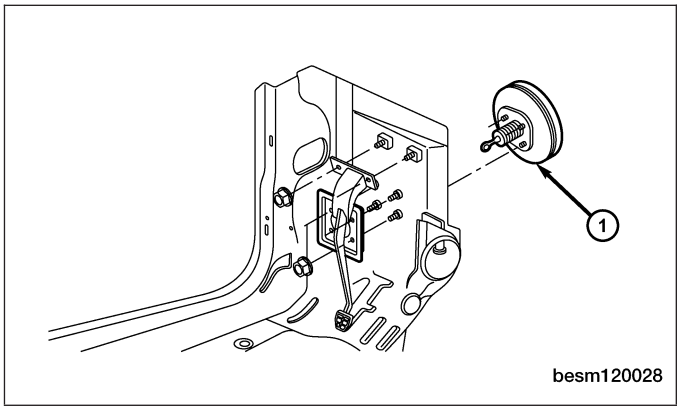

Downloaded from www.Manualslib.com manuals search engine

Power Brake Booster - RHD

Description

The power brake booster is mounted in the engine compartment on the right side of the dash panel. The master cylinder is bolted to the front of the booster.

Operation

A vacuum line connects the check value to engine source vacuum. The booster input rod extends through the dash panel and connects to the brake pedal.

Removal & Installation

CAUTION:

The vacuum in the power brake booster must be pumped down before removing the master cylinder to avoid damaging the master cylinder and to prevent the booster from sucking in any contamination. This can be done by pumping the brake pedal while the engine is not running until a firm brake pedal is achieved.

1. Remove the master cylinder (See Master Cylinder Removal & Installation in Section 12 Brakes).
2. Remove the spring-type cotter pin (2) and clevis pin (1) from the brake booster rod (3).

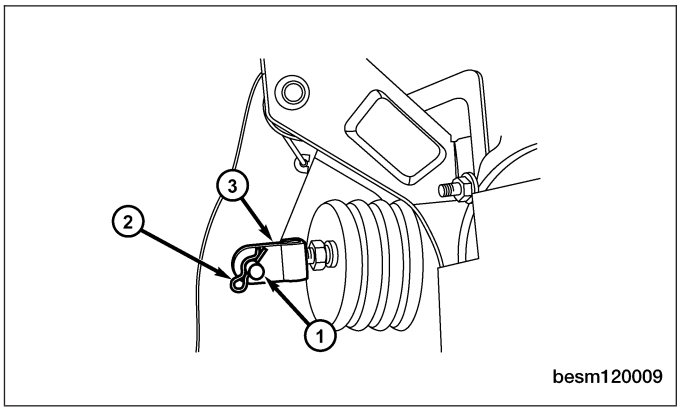

3. Remove the nuts and bolts (1) attaching the power brake booster to the brake pedal bracket.
   (Tighten: Brake pedal/Power brake booster mounting nuts and bolts to 25 N·m)
4. Remove the brake pedal bracket.

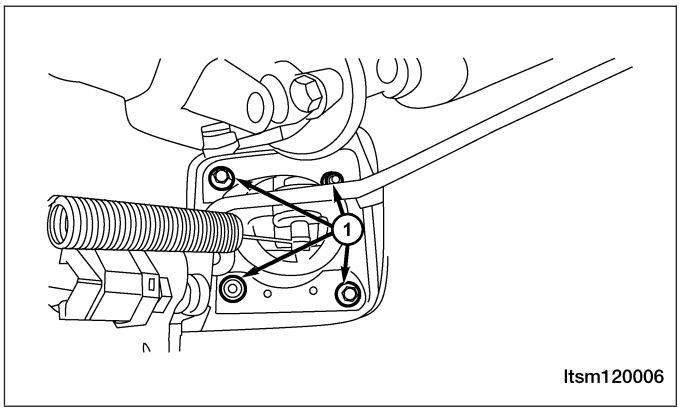

Downloaded from www.Manualslib.com manuals search engine

5. Disconnect the vacuum hose (1) from the check valve on the power brake booster.

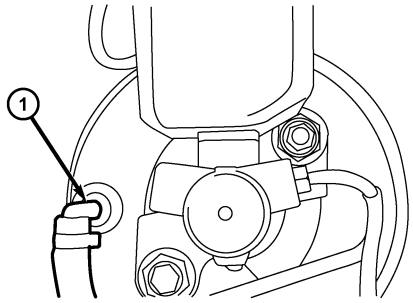

ltsm120004

6. Slide the power brake booster forward until its mounting studs clear the dash panel, then remove it through the engine compartment.
7. Installation is in the reverse order of removal.

Downloaded from www.Manualslib.com manuals search engine

Front Brake Caliper

Description

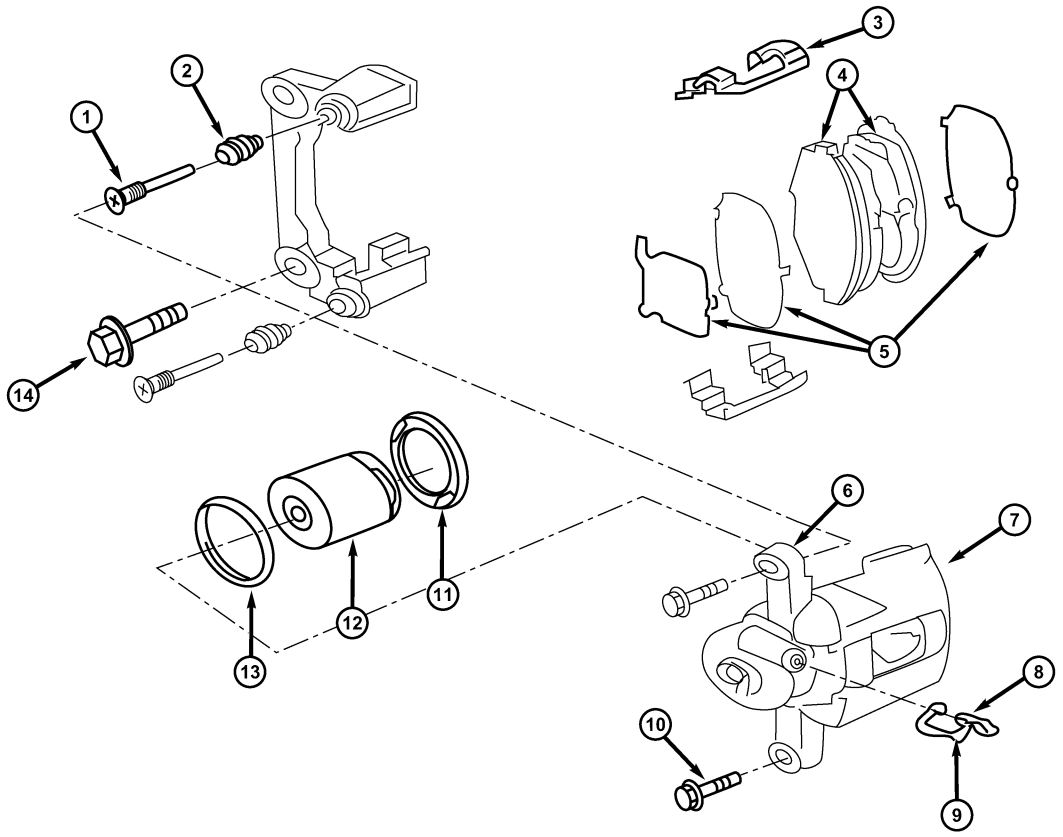

ltsm120007

1 - Locating Guide Rod	5 - Lining Damper
2 - Dust Cap	6 - Brake Caliper Bracket
3 - Brake Gasket	7 - Brake Caliper Body Connecting Bolt
4 - Brake Lining Assembly	8 - Bleeding Screw

9 - Dust Cover	12 - Piston
10 - Brake Caliper	13 - Piston Seal
11 - Piston Dust Cap	14 - Brake Caliper Bracket Bolt

The calipers are a single piston type. The calipers are free to slide laterally on the anchor, this allows continuous compensation for lining wear. The calipers are directly bolted to the wheel hub with mounting bolts. The brake rotor dust shield is mounted to the hub.

Operation

When the brakes are applied, fluid pressure is exerted against the caliper piston. The fluid pressure is exerted equally and in all directions. This means pressure exerted against the caliper piston and within the caliper bores will be equal. Fluid pressure applied to the pistons is transmitted directly to the inboard brake pad. This forces the pad

Downloaded from www.Manualslib.com manuals search engine

lining against the inner surface of the disc brake rotor. At the same time, fluid pressure within the piston bore forces the caliper to slide inward on the slide pins. This action brings the outboard brake pad lining into contact with the outer surface of the disc brake rotor.

Removal & Installation

1. Using a brake pedal holding tool, depress the brake pedal past its first 25 mm of travel and hold it in this position. This will isolate the master cylinder from the brake hydraulic system and will not allow the brake fluid to drain out of the master cylinder reservoir when the lines are opened.
2. Raise and support the vehicle.
3. Remove the wheel mounting nuts and the tire and wheel assembly.
   (Tighten: Wheel mounting nuts to 110 N·m)
4. Using a large C-clamp (2), push the caliper piston to an adequate depth to remove the brake caliper (1) from the brake disc.

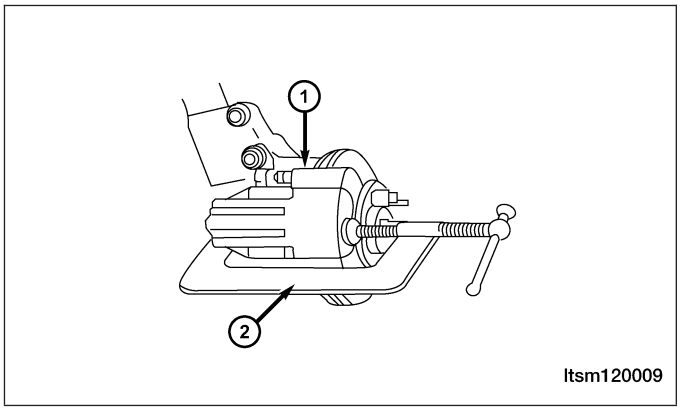

5. Remove the front brake hose from the front brake caliper.
   (Tighten: Front caliper brake hose to 19 N·m)
6. Remove the front caliper guide pin bolts (1).
   (Tighten: Front caliper guide pin bolts to 23 N·m)

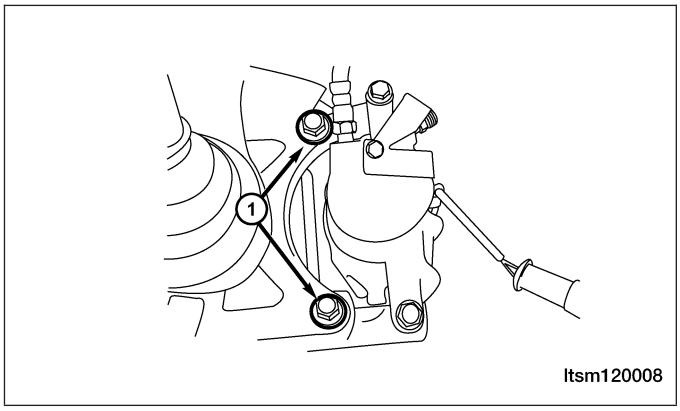

7. Slide the front brake caliper from the disc brake adapter bracket and remove.
8. Installation is in the reverse order of removal.

Installation Notes:

- Completely retract the caliper piston back into the bore of the caliper.
- After installation, bleed the caliper as necessary.

Rear Brake Caliper

Description

The rear disc brakes consist of fixed single piston style calipers and solid rotors. The rear caliper is mounted to the rear wheel hub. The calipers are directly bolted to the wheel hub with mounting bolts. The disc brake rotor dust shield is mounted to the hub. The brake rotor has a built in drum used for the parking brakes. The parking brake shoes are mounted to the wheel hub.

Downloaded from www.Manualslib.com manuals search engine

Operation

When the brakes are applied, fluid pressure is exerted against the caliper piston. The fluid pressure is exerted equally and in all directions. This means pressure exerted against the caliper piston and within the caliper bores will be equal. Fluid pressure applied to the pistons is transmitted directly to the inboard brake pad. This forces the pad lining against the inner surface of the brake rotor. At the same time, fluid pressure within the piston bore forces the caliper to slide inward on the slide pins. This action brings the outboard brake pad lining into contact with the outer surface of the disc brake rotor.

Removal & Installation

1. Using a brake pedal holding tool, depress the brake pedal past its first 25 mm of travel and hold it in this position. This will isolate the master cylinder from the brake hydraulic system and will not allow the brake fluid to drain out of the master cylinder reservoir when the lines are opened.
2. Raise and support the vehicle.
3. Remove the wheel mounting nuts and the tire and wheel assembly.
   (Tighten: Wheel mounting nuts to 110 N·m)
4. Remove the banjo bolt connecting the brake hose to the rear brake caliper.
   (Tighten: Rear caliper banjo bolt to 20 N·m)
5. Remove the rear caliper guide pin bolts.
   (Tighten: Rear caliper guide pin bolts to 23 N·m)
6. Remove rear brake caliper adapter mounting bolts (1).
   (Tighten: Rear brake caliper adapter mounting bolts to 63 N·m)
7. Slide the rear brake caliper from the disc brake adapter bracket and remove.

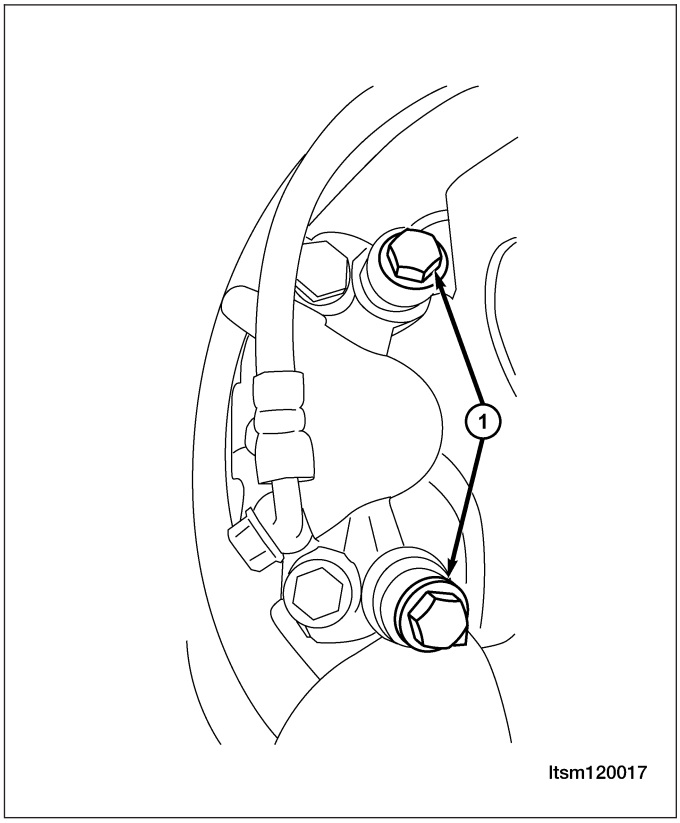

8. Installation is in the reverse order of removal.

Installation Notes:

- Completely retract the caliper piston back into the bore of the caliper.
- After installation bleed the caliper as necessary.

Downloaded from www.Manualslib.com manuals search engine

Front Brake Rotor

Removal & Installation

1. Raise and support the vehicle.
2. Remove the wheel mounting nuts and the tire and wheel assembly. (Tighten: Wheel mounting nuts to 110 N·m)
3. Remove the front caliper (See Front Caliper Removal & Installation in Section 12 Brakes).
4. Remove the front brake rotor locating screws (1). (Tighten: Front brake rotor locating screws to 6-12 N·m)
5. Slide the front brake rotor off the hub and bearing.
6. Installation is in the reverse order of removal.

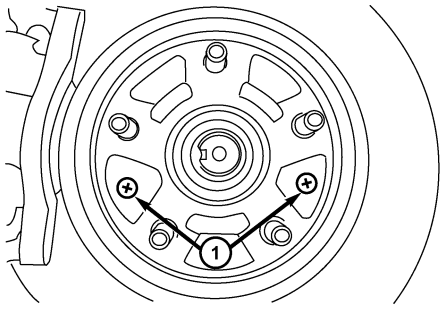

ltsm120022

Inspection

Excessive runout or wobble in a rotor can increase pedal travel due to piston knock-back. This increases guide pin sleeve wear due to the tendency of the caliper to follow the rotor wobble.

Braking Surface Inspection

Light braking surface scoring and wear is acceptable. If heavy scoring or warping is evident, the rotor must be resurfaced or replaced. Excessive wear and scoring of the rotor can cause improper lining contact on the rotor's braking surface. If the ridges on the rotor are not removed before new brake pads are installed, improper wear of the shoes will result. Some discoloration or wear of the rotor surface is normal and does not require resurfacing when linings are replaced. If cracks or burned spots are evident, the rotor must be replaced.

Rotor Minimum Thickness

Measure the rotor thickness (1) at the center of the brake pad contact surface. Replace the rotor (2) if it is worn below minimum thickness or if machining the rotor will cause its thickness to fall below specifications.

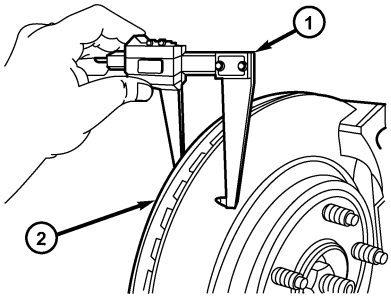

besm120004

CAUTION:
Do not machine the rotor if it will cause the rotor to fall below minimum thickness.

Downloaded from www.Manualslib.com manuals search engine

Rotor Runout

1. Install standard wheel mounting nuts, flat side to rotor, on all the wheel studs (2). Progressively tighten the nuts in a crisscross pattern to 110 N·m.
2. Mount a dial indicator (1), with wheel, or equivalent, to the knuckle. Position the dial indicator wheel to contact the rotor braking surface approximately 10 mm from the outer edge of the rotor.
3. Slowly rotate the brake rotor (3) checking lateral runout, marking the low and high spots. Record these measurements.
4. Check and record the runout on the opposite side of the rotor in the same fashion, marking the low and high spots.
5. Compare runout measurement to specification.
6. If runout is in excess of specifications, check the lateral runout of the hub face.

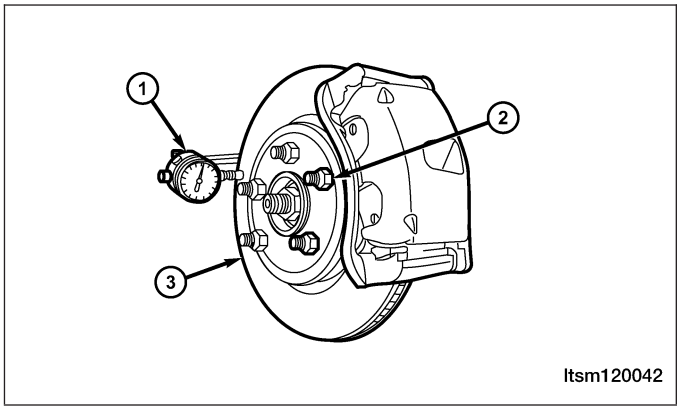

BRAKE ROTOR	ROTOR THICKNESS	MINIMUM ROTOR THICKNESS	ROTOR DIAMETER	ROTOR RUNOUT
Front Rotor	25 mm	23 mm	265 mm	0.1 mm

Rear Brake Rotor

Removal & Installation

1. Raise and support the vehicle.
2. Remove the wheel mounting nuts and the tire and wheel assembly. (Tighten: Wheel mounting nuts to 110 N·m)
3. Remove rear caliper (1) (See Rear Caliper Removal & Installation in Section 12 Brakes).
4. Slide the rear brake rotor (3) off the hub and bearing.
5. Installation is in the reverse order of removal.

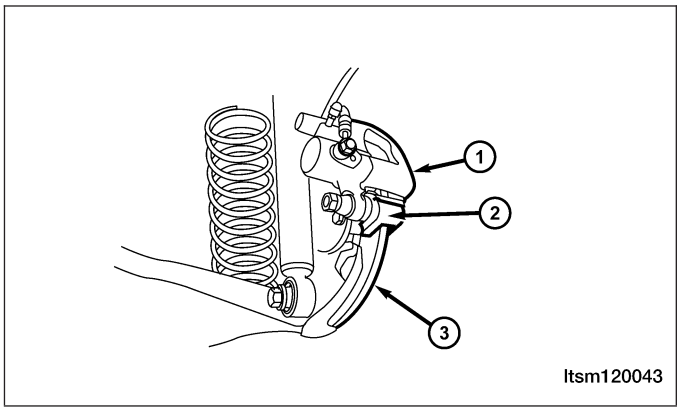

Inspection

Excessive runout or wobble in a rotor can increase pedal travel due to piston knock-back. This increases guide pin sleeve wear due to the tendency of the caliper to follow the rotor wobble.

Braking Surface Inspection

Light braking surface scoring and wear is acceptable. If heavy scoring or warping is evident, the rotor must be resurfaced or replaced. Excessive wear and scoring of the rotor can cause improper lining contact on the rotor's braking surface. If the ridges on the rotor are not removed before new brake pads are installed, improper wear of the shoes will result. Some discoloration or wear of the rotor surface is normal and does not require resurfacing when linings are replaced. If cracks or burned spots are evident, the rotor must be replaced.

Downloaded from www.Manualslib.com manuals search engine

Rotor Minimum Thickness

Measure the rotor thickness (1) at the center of the brake pad contact surface. Replace the rotor (2) if it is worn below minimum thickness or if machining the rotor will cause its thickness to fall below specifications.

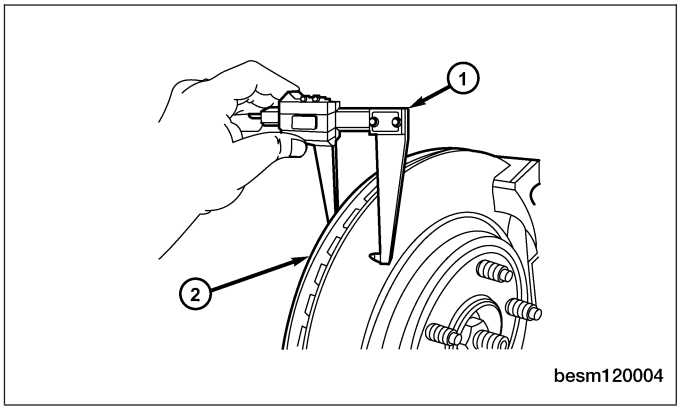

CAUTION:
Do not machine the rotor if it will cause the rotor to fall below minimum thickness.

Rotor Runout

1. Install standard wheel mounting nuts, flat side to rotor, on all the wheel studs. Progressively tighten the nuts in a crisscross pattern to 110 N·m.
2. Mount a dial indicator, with wheel, or equivalent, to the knuckle. Position the dial indicator wheel to contact the rotor braking surface approximately 10 mm from the outer edge of the rotor.
3. Slowly rotate the brake rotor checking lateral runout, marking the low and high spots. Record these measurements.
4. Check and record the runout on the opposite side of the rotor in the same fashion, marking the low and high spots.
5. Compare runout measurement to specification.
6. If runout is in excess of specifications, check the lateral runout of the hub face.

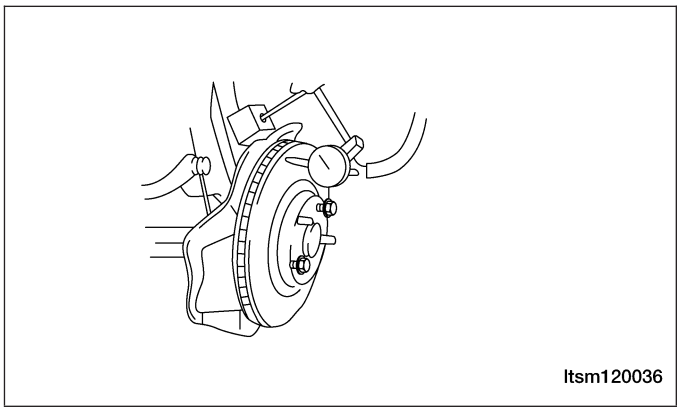

BRAKE ROTOR	ROTOR THICKNESS	MINIMUM ROTOR THICKNESS	ROTOR DIAMETER
Rear Rotor	9 mm	7 mm	303 mm

Rear Brake Backing Plate

Removal & Installation

1. Raise and support the vehicle.
2. Remove the wheel mounting nuts and the tire and wheel assembly. (Tighten: Wheel mounting nuts to 110 N·m)

Downloaded from www.Manualslib.com manuals search engine

3. Remove the rear brake caliper (See Rear Brake Caliper Removal & Installation in Section 12 Brake).
4. Remove the rear brake rotor (See Rear Brake Rotor Removal & Installation in Section 12 Brake).
5. Remove the rear hub and bearing (See Rear Hub And Bearing Removal & Installation in Section 09 Driveline & Axle).

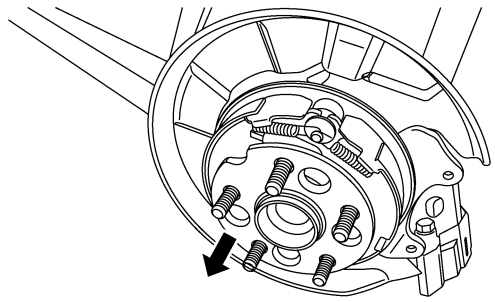

6. Remove the four bolts (1) that mount the rear brake backing plate to the trailing link.
   (Tighten: Rear brake backing plate bolts to 20 N·m)
7. Remove the rear brake backing plate assembly.

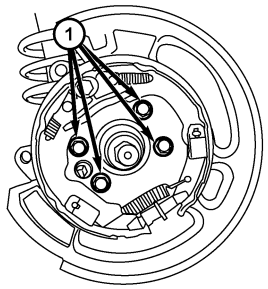

8. Installation is in the reverse order of removal.

Front Brake Pads

Removal & Installation

1. Raise and support the vehicle.
2. Remove the wheel mounting nuts and the tire and wheel assembly.
   (Tighten: Wheel mounting nuts to 110 N·m)

NOTE :
In some cases, it may be necessary to retract the caliper piston in its bore a small amount in order to provide sufficient clearance between the pads and the rotor.

3. Remove the front caliper guide pin bolts (1) and (3).
   (Tighten: Front caliper guide pin bolts to 23 N·m)
4. Remove the disc brake caliper (2) from the disc brake adapter bracket and hang it out of the way using wire. Use care not to over extend the brake hose when doing this.

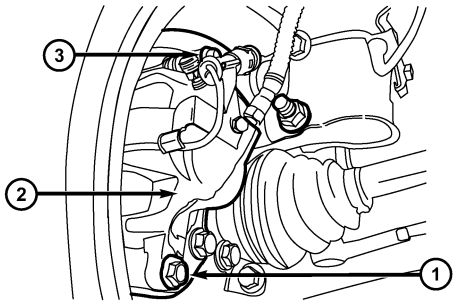

5. Remove the inboard brake pad from the caliper adapter bracket.
6. Remove the outboard brake pad from the caliper by prying the brake pad retaining clip over the raised area on the caliper. Slide the brake pad off of the brake caliper.
7. Installation is in the reverse order of removal.

Installation Notes:

- Before installing brake pads, completely retract the caliper piston back into the bore of the caliper.

Downloaded from www.Manualslib.com manuals search engine

- After installation and before moving the vehicle, pump the brake pedal several times to set the pads to the brake rotor.
- Check and adjust the brake fluid level in the reservoir as necessary.
- Road test the vehicle and make several stops to wear off any foreign material on the brakes and to seat the brake pads.
- After installation and before moving the vehicle, pump the brake pedal several times to set the pads to the brake rotor.

Inspection

Visually inspect brake pads for uneven lining wear. Also inspect for excessive lining deterioration. Check the clearance between the tips of the wear indicators (if equipped) on the pads and the brake rotors. If a visual inspection does not adequately determine the condition of the lining, a physical check will be necessary. To check the amount of lining wear, remove the disc brake pads from the vehicle. Measure the brake pad minimum thickness. Brake pads must be replaced when usable material on a brake pad lining measured at its thinnest point measures one millimeter or less. Replace both disc brake pads (inboard and outboard) at each caliper. It is also necessary to replace the pads on the opposite side of the vehicle as well as the pads failing inspection to maintain proper braking characteristics. If the brake pad assemblies do not require replacement, be sure to reinstall the brake pads in the original position from which they were removed.

Rear Brake Pads

Removal & Installation

1. Raise and support the vehicle.
2. Remove the wheel mounting nuts and the tire and wheel assembly.
   (Tighten: Wheel mounting nuts to 110 N·m)

NOTE :
In some cases, it may be necessary to retract the caliper piston in its bore a small amount in order to provide sufficient clearance between the pads and the rotor.

3. Remove the lower rear caliper guide pin bolt (2).
   (Tighten: Rear caliper guide pin bolt to 23 N·m)
   CAUTION: When moving rear brake caliper upward, use extreme care not to damage or overextend the flex hose.
4. Rotate the caliper (1) upward hinging off the upper guide pin bolt. Rotate the caliper upward just enough to allow brake pad removal.

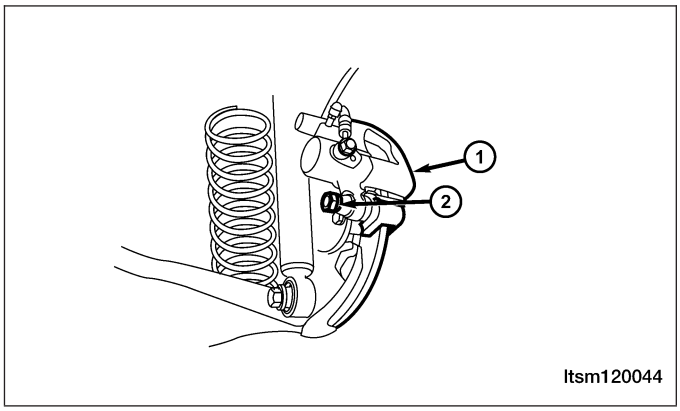

5. Slide the rear brake pads off of the brake caliper adapter.

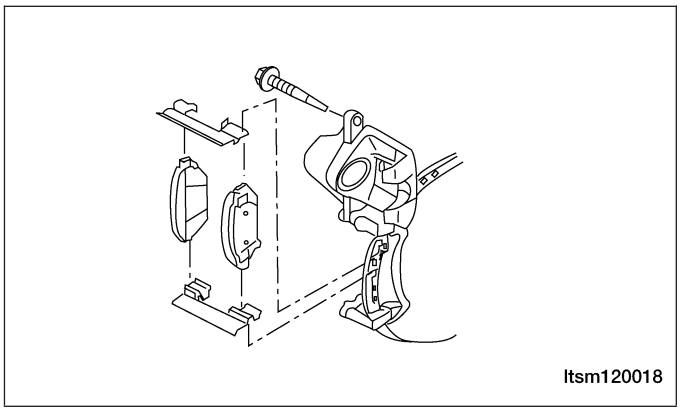

Downloaded from www.Manualslib.com manuals search engine

Inspection

Visually inspect brake pads for uneven lining wear. Also inspect for excessive lining deterioration. Check the clearance between the tips of the wear indicators (if equipped) on the pads and the brake rotors. If a visual inspection does not adequately determine the condition of the lining, a physical check will be necessary. To check the amount of lining wear, remove the disc brake pads from the vehicle. Measure the brake pad minimum thickness. Brake pads must be replaced when usable material on a brake pad lining measured at its thinnest point measures one millimeter or less. Replace both disc brake pads (inboard and outboard) at each caliper. It is also necessary to replace the pads on the opposite side of the vehicle as well as the pads failing inspection to maintain proper braking characteristics. If the brake pad assemblies do not require replacement, be sure to reinstall the brake pads in the original position from which they were removed.

Downloaded from www.Manualslib.com manuals search engine

Front Brake Caliper

Disassemble

Before disassembling the brake caliper, clean and inspect it.

WARNING!

- **Under no condition should high pressure air ever be used to remove a piston from a caliper bore. Personal injury could result from such a practice.**
- **Do not place face or hands near caliper and piston if using compressed air pressure to remove piston. Do not use high pressure.**

1. Place a wooden block in the caliper.
2. If necessary, apply low pressure compressed air to the caliper fluid inlet in short spurts to force the piston out.
3. Remove the piston from the caliper.

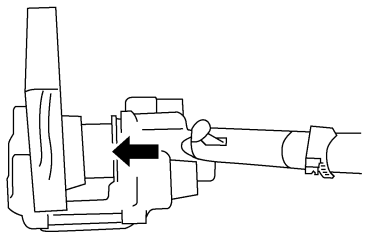

ltsm120011

4. Remove the dust boot from the piston and discard it.

CAUTION:
Do not use a screwdriver or other metal tool for seal removal. Using such tools can scratch the bore or leave burrs on the seal groove edges.

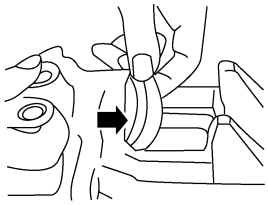

ltsm120010

5. Using a soft tool such as a plastic trim stick (1), work the piston seal (2) out of its groove in caliper piston bore. Discard the used seal.

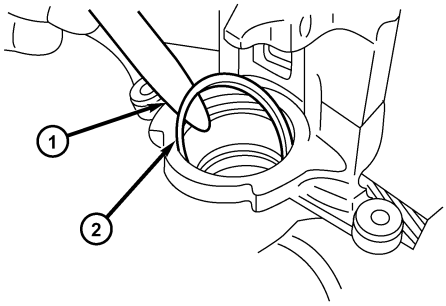

besm120003

Downloaded from www.Manualslib.com manuals search engine

6. Clean the piston bore and drilled passage ways with alcohol or a suitable solvent. Wipe it dry using only a lint-free cloth.

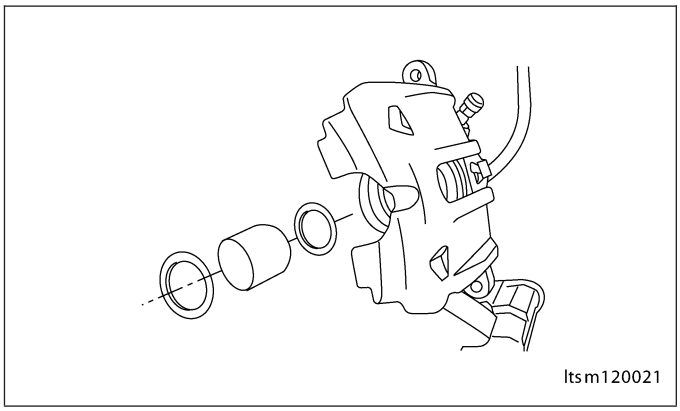

Inspection

1. Inspect both the piston and bore for scoring or pitting. Bores that show light scratches or corrosion can usually be cleared of the light scratches or corrosion using crocus cloth.
2. Remove deposits on the piston using a soft brass wire brush or a rough shop towel. Do not clean piston with a polishing or emery cloth because this will damage the chrome-plated surface. Replace the piston if the chrome plated surface is damaged. If the piston is jammed or if the cylinder bores are scored or rusted, replace the complete brake caliper. Remove small, light rust spots in the cylinder bore with a polishing cloth.
3. Inspect the caliper guide sleeves for smooth operation. Repair and grease caliper sleeves as necessary.

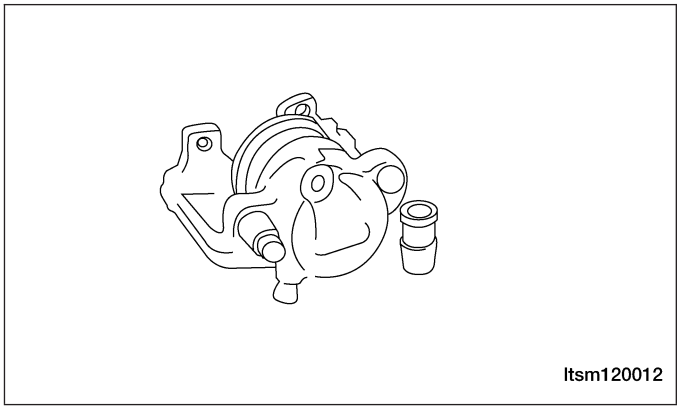

Assemble

NOTE :

- Always have clean hands when assembling a brake caliper.
- Always use fresh, clean brake fluid when assembling a brake caliper.
- Never use an old piston seal.
- Bleed the brakes as necessary.

Downloaded from www.Manualslib.com manuals search engine

Perform the following procedure to assemble the brake caliper:

1. Lubricate the caliper piston, piston seals and piston bore with clean brake fluid.
2. Install the new piston seal into the seal groove.

NOTE :
Verify seal is fully seated into seal groove and not twisted.

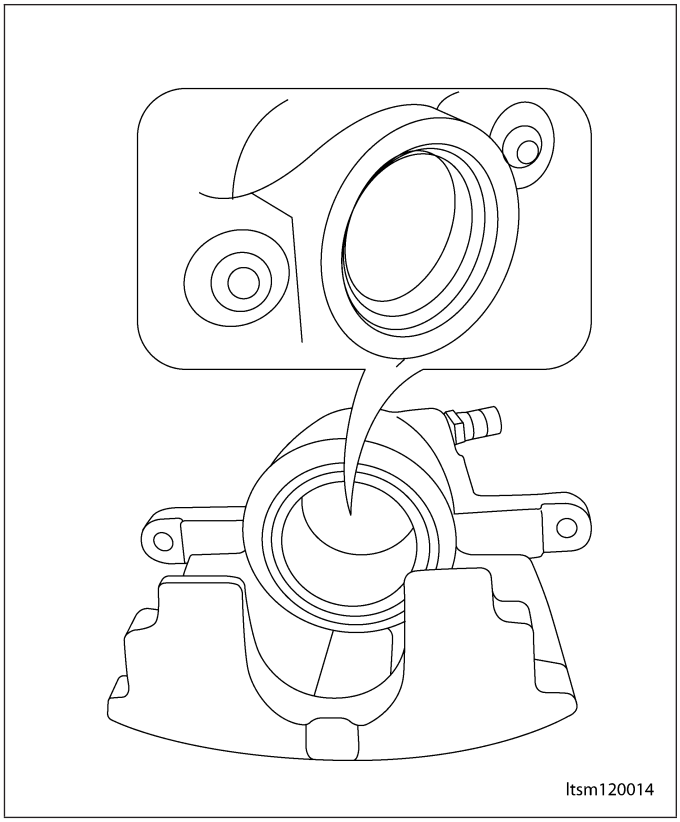

3. Install the new dust boot on the caliper piston and seat the dust boot lip into the piston groove.
4. Stretch the dust boot rearward to straighten the boot folds, then move the boot forward until the fold snaps into place.

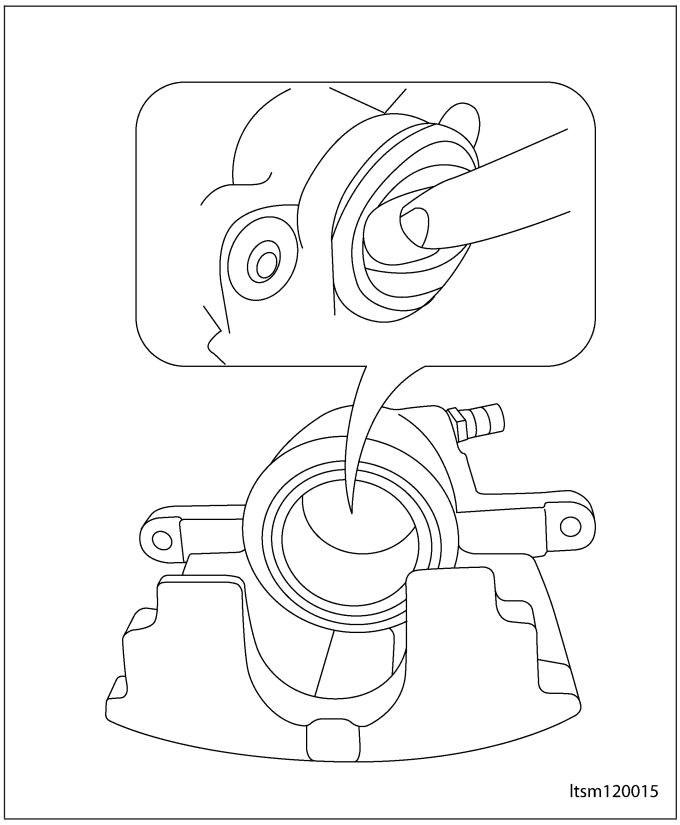

Downloaded from www.Manualslib.com manuals search engine

5. Install the piston into the caliper bore and press the piston down to the bottom of the caliper bore by hand or with the handle of a hammer.

CAUTION:
When assembling, the force applied to the piston to seat it in the bore must be applied uniformly to avoid cocking and binding of the piston.

6. Seat the dust boot in caliper.
7. Install the new caliper bleed screw.
8. Install the caliper (See Front Brake Caliper Removal & Installation in Section 12 Brakes).

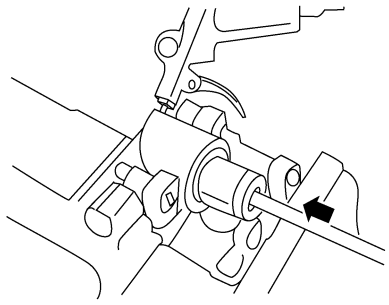
ltsm120016

Rear Brake Caliper

Disassemble

Before disassembling the brake caliper, clean and inspect it.

WARNING!

- **Under no condition should high pressure air ever be used to remove a piston from a caliper bore. Personal injury could result from such a practice.**
- **Do not place face or hands near caliper and piston if using compressed air pressure to remove piston. Do not use high pressure.**

1. Place a wooden block in the caliper.
2. If necessary, apply low pressure compressed air to the caliper fluid inlet in short spurts to force the piston out.
3. Remove the piston from the caliper.

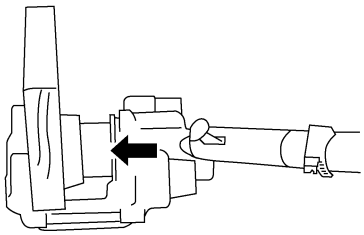
ltsm120011

4. Remove the dust boot from the piston and discard it.

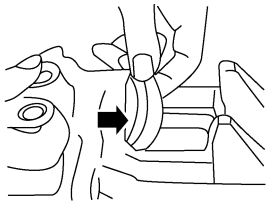
ltsm120010

Downloaded from www.Manualslib.com manuals search engine

CAUTION:

Do not use a screwdriver or other metal tool for seal removal. Using such tools can scratch the bore or leave burrs on the seal groove edges.

5. Using a soft tool such as a plastic trim stick (1), work the piston seal (2) out of its groove in caliper piston bore. Discard the used seal.

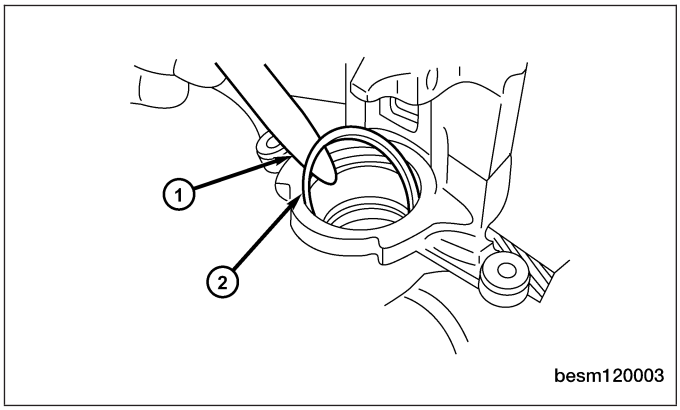

6. Clean the piston bore and drilled passage ways with alcohol or a suitable solvent. Wipe it dry using only a lint-free cloth.

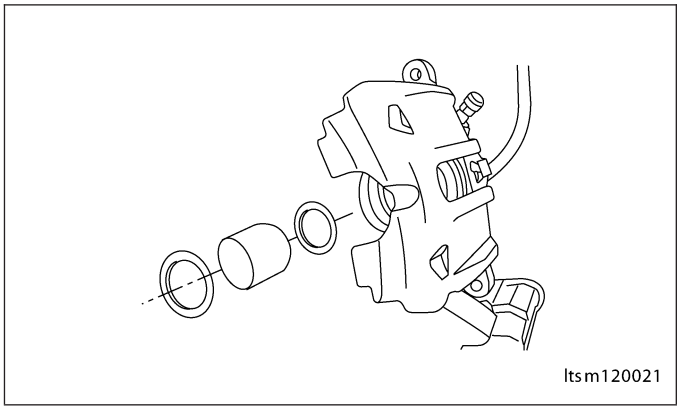

Inspection

1. Inspect both the piston and bore for scoring or pitting. Bores that show light scratches or corrosion can usually be cleared of the light scratches or corrosion using crocus cloth.
2. Remove deposits on the piston using a soft brass wire brush or a rough shop towel. Do not clean piston with a polishing or emery cloth because this will damage the chrome-plated surface. Replace the piston if the chrome plated surface is damaged. If the piston is jammed or if the cylinder bores are scored or rusted, replace the complete brake caliper. Remove small, light rust spots in the cylinder bore with a polishing cloth. Remove heavy rust spots in front of the groove for the piston seal using fine-grit emery paper (grit size 380 to 500).
3. Inspect the caliper seal rings. Repair the seal rings as necessary.

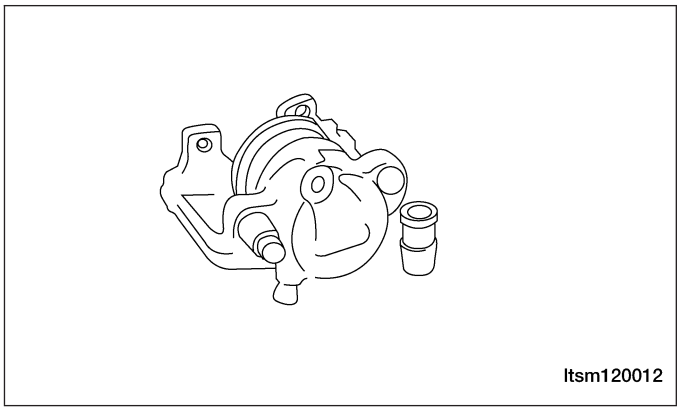

Downloaded from www.Manualslib.com manuals search engine

Assemble

NOTE :
- Always have clean hands when assembling a brake caliper.
- Always use fresh, clean brake fluid when assembling a brake caliper.
- Never use an old piston seal.
- Bleed the brakes as necessary.

Perform the following procedure to assemble the brake caliper:

1. Lubricate the caliper piston, piston seals and piston bore with clean brake fluid.
2. Install the new piston seal into the seal groove.

NOTE :
Verify seal is fully seated into seal groove and not twisted.

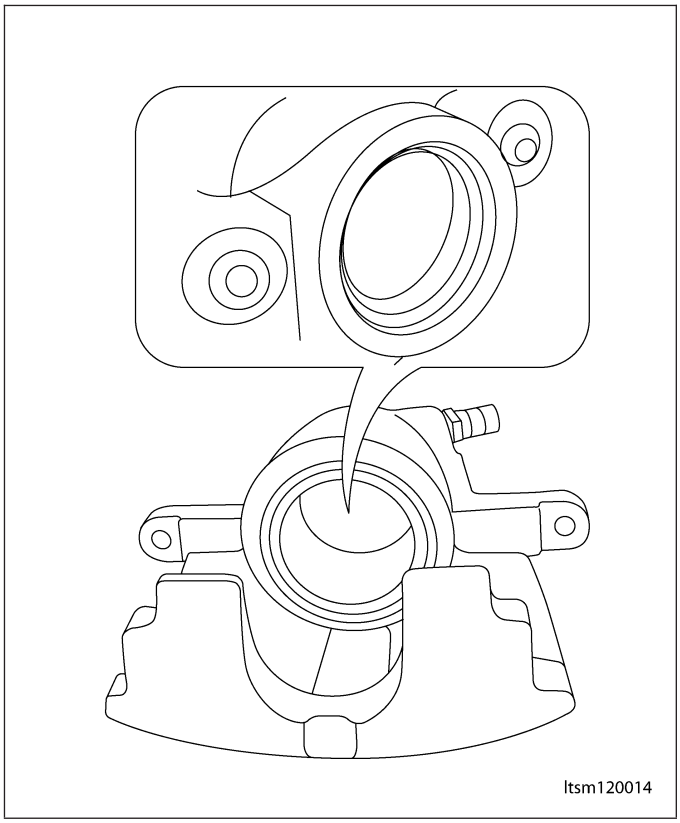

Downloaded from www.Manualslib.com manuals search engine

3. Install the new dust boot on the caliper piston and seat the dust boot lip into the piston groove.
4. Stretch the dust boot rearward to straighten the boot folds, then move the boot forward until the fold snaps into place.

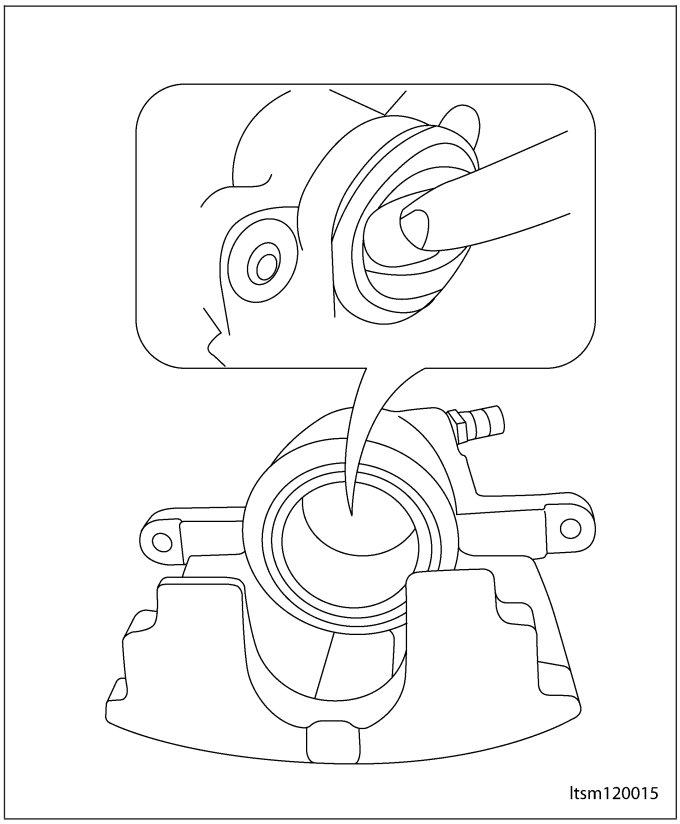

5. Install the piston into the caliper bore and press the piston down to the bottom of the caliper bore by hand or with the handle of a hammer.

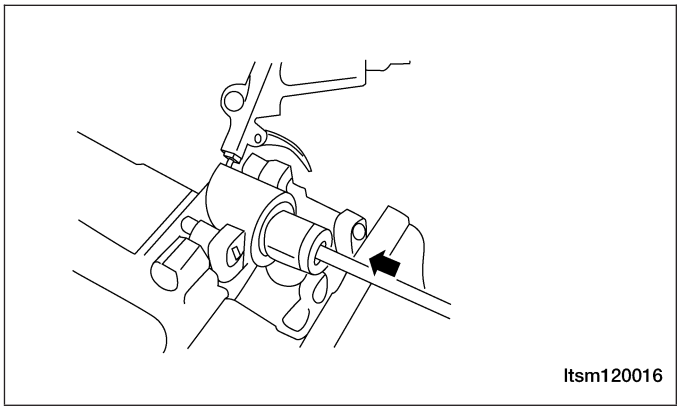

CAUTION:
When assembling, the force applied to the piston to seat it in the bore must be applied uniformly to avoid cocking and binding of the piston.

6. Seat the dust boot in caliper.
7. Install the new caliper bleed screw.
8. Install the caliper (See Front Brake Caliper Removal & Installation in Section 12 Brakes).

Downloaded from www.Manualslib.com manuals search engine

ANTILOCK BRAKES

GENERAL INFORMATION 12-35
Description 12-35
Operation 12-36
Specifications 12-36
Special Tools 12-37
Electrical Schematics 12-38
Antilock Brake System (ABS) Module Connector Pin-Out Table 12-44

DIAGNOSIS & TESTING 12-45

Diagnostic Help 12-45
Diagnostic Help 12-45
Ground Inspection 12-45
Diagnostic Tools 12-46

Diagnostic Trouble Code (DTC) List 12-46
Antilock Brake System DTC List 12-46

Diagnostic Trouble Code (DTC) Tests 12-47
C1101 - Battery Voltage High, C1102 - Battery Voltage Low 12-47
C1200 - Left Front Wheel Speed Sensor Circuit Open or Shorted 12-54
C1203 - Right Front Wheel Speed Sensor Circuit Open or Shorted 12-59
C1206 - Left Rear Wheel Speed Sensor Circuit Open or Shorted 12-64
C1209 - Right Rear Wheel Speed Sensor Circuit Open or Shorted 12-69
C1604 - ECU Defect, Internal Errors or Solenoid Fault 12-74

ON-VEHICLE SERVICE 12-76

Antilock Brake System (ABS) Bleeding Procedure 12-76
ABS Bleeding Information 12-76
ABS Bleeding Instructions 12-76

Antilock Brake System (ABS) Hydraulic Control Module 12-77
Removal & Installation 12-77

Front Wheel Speed Sensor 12-77
Removal & Installation 12-77

Rear Wheel Speed Sensor 12-78
Removal & Installation 12-78

Downloaded from www.Manualslib.com manuals search engine

GENERAL INFORMATION

Description

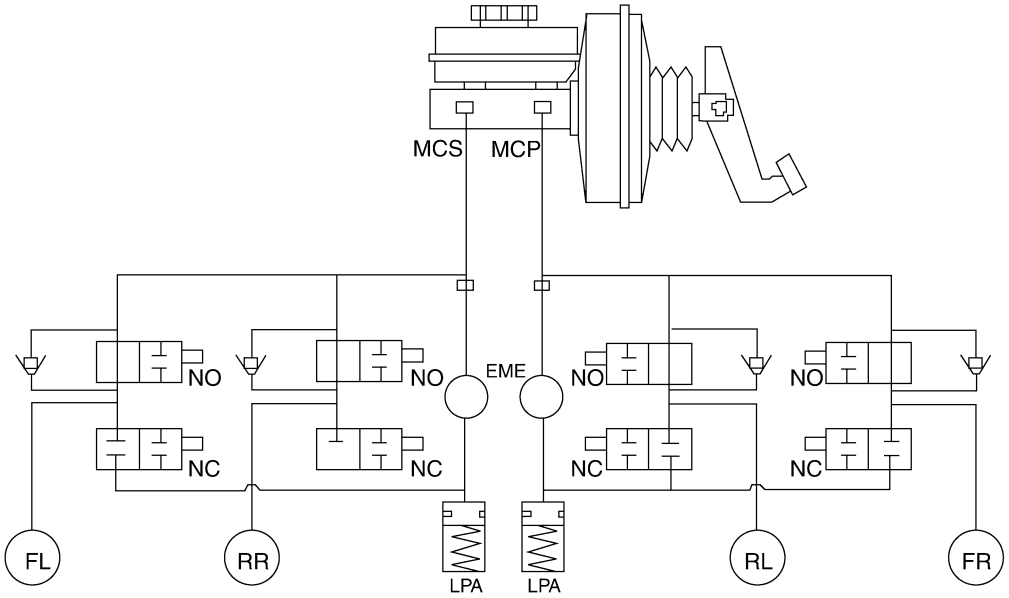

ltsm120040

This Antilock Brake System (ABS) uses components of the base brake system, but also features the following components:

- Hydraulic Control Unit and Antilock Brake System Module (ABS module)
- Wheel Speed Sensors (wheel speed sensor) - Four sensors (one sensor at each wheel making it a four-channel system)

The purpose of the ABS is to prevent wheel lockup under braking conditions on virtually any type of road surface. Antilock braking is desirable because a vehicle that is stopped without locking the wheels retains directional stability and some steering capability. This allows the driver to retain greater control of the vehicle during braking.

Downloaded from www.Manualslib.com manuals search engine

Operation

ABS Braking

- ABS operation is available at all vehicle speeds above 20 km/h. If a wheel locking tendency is detected during a brake application, the brake system enters the ABS mode. During ABS braking, hydraulic pressure in the four wheel circuits is modulated to prevent any wheel from locking. Each wheel circuit is designed with a set of electric solenoids to allow modulation. The system can build and release pressure at each wheel, depending on signals generated by the wheel speed sensors at each wheel and received at the ABS Module.
- There are a few performance characteristics of the ABS that may at first seem abnormal, but in fact are normal. These characteristics are described below.
  - If the electrical system malfunctions, the Fail-Safe function is activated, the ABS becomes inoperative and the ABS warning lamp turns on.
  - During ABS operation, the brake pedal may vibrate lightly and a mechanical noise may be heard. This is normal.
  - Stopping distance may be longer than that of vehicles without ABS when vehicle drives on rough, gravel, or snow-covered (fresh, deep snow) roads.

Specifications

Torque Specifications

DESCRIPTION	TORQUE (N·m)
ABS Mounting Bolt (To Bracket)	10
ABS Mounting Bracket Screws (To Frame)	20
ABS Mounting Bracket Screw And Nut (To Frame)	20
ABS Wheel Speed Sensor Head Mounting Screw - Rear	10
Brake Tube Nuts	10
Wheel Mounting Nuts	110

Downloaded from www.Manualslib.com manuals search engine

Special Tools

Diagnostic Scan Tool X-431	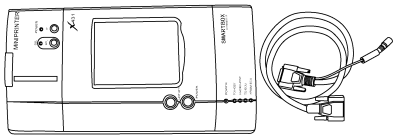 besm030001
Digital Multimeter Fluke 15B & 17B	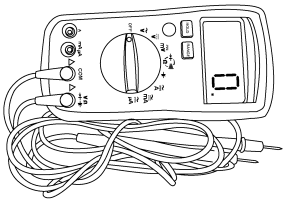 besm030002
CAN-BUS Diagnostic Connector	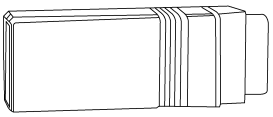 besm120036

Downloaded from www.Manualslib.com manuals search engine

Electrical Schematics

Antilock Brake System - 1.6L / 1.8L (Page 1 of 3)

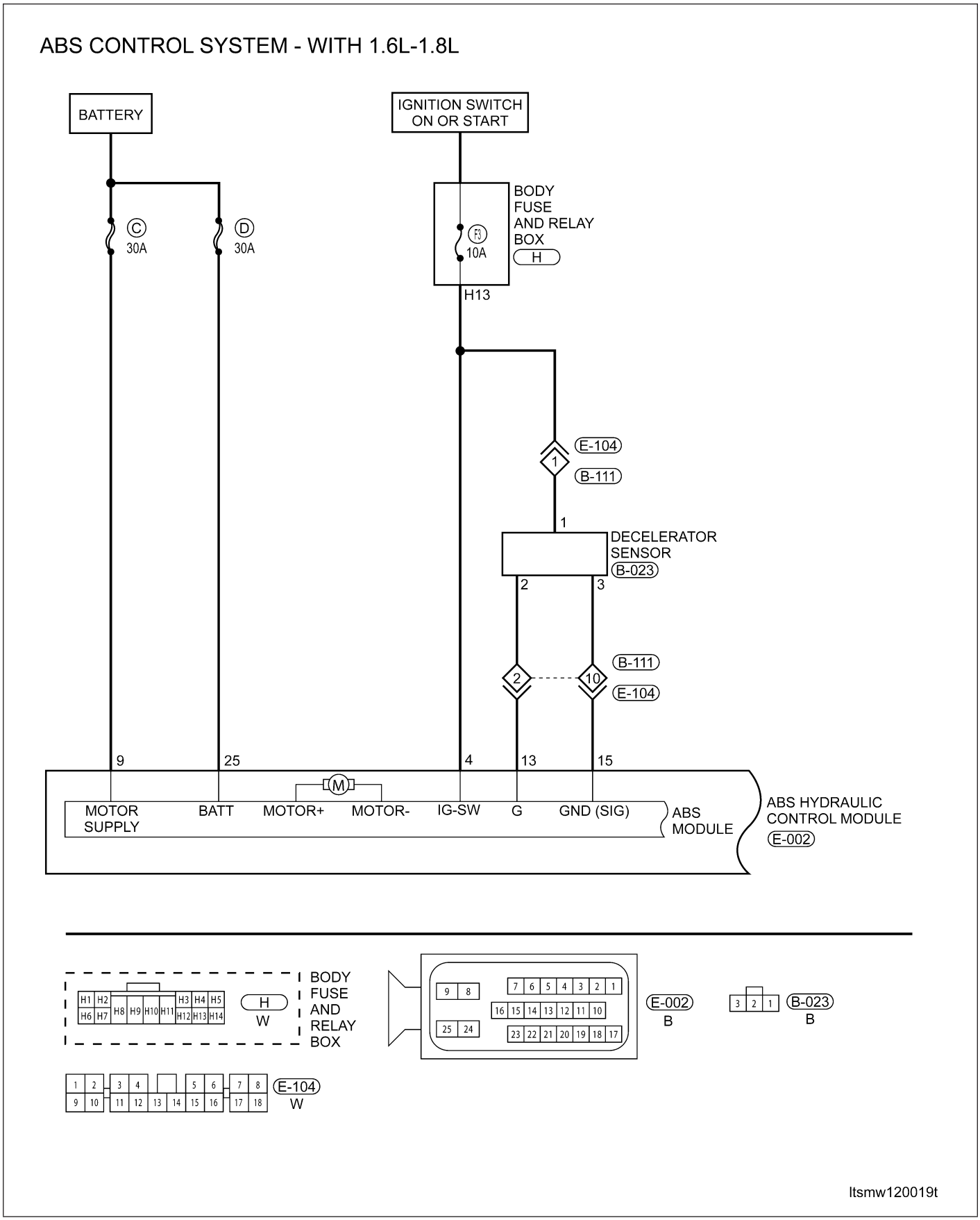

Downloaded from www.Manualslib.com manuals search engine

Antilock Brake System - 1.6L / 1.8L (Page 2 of 3)

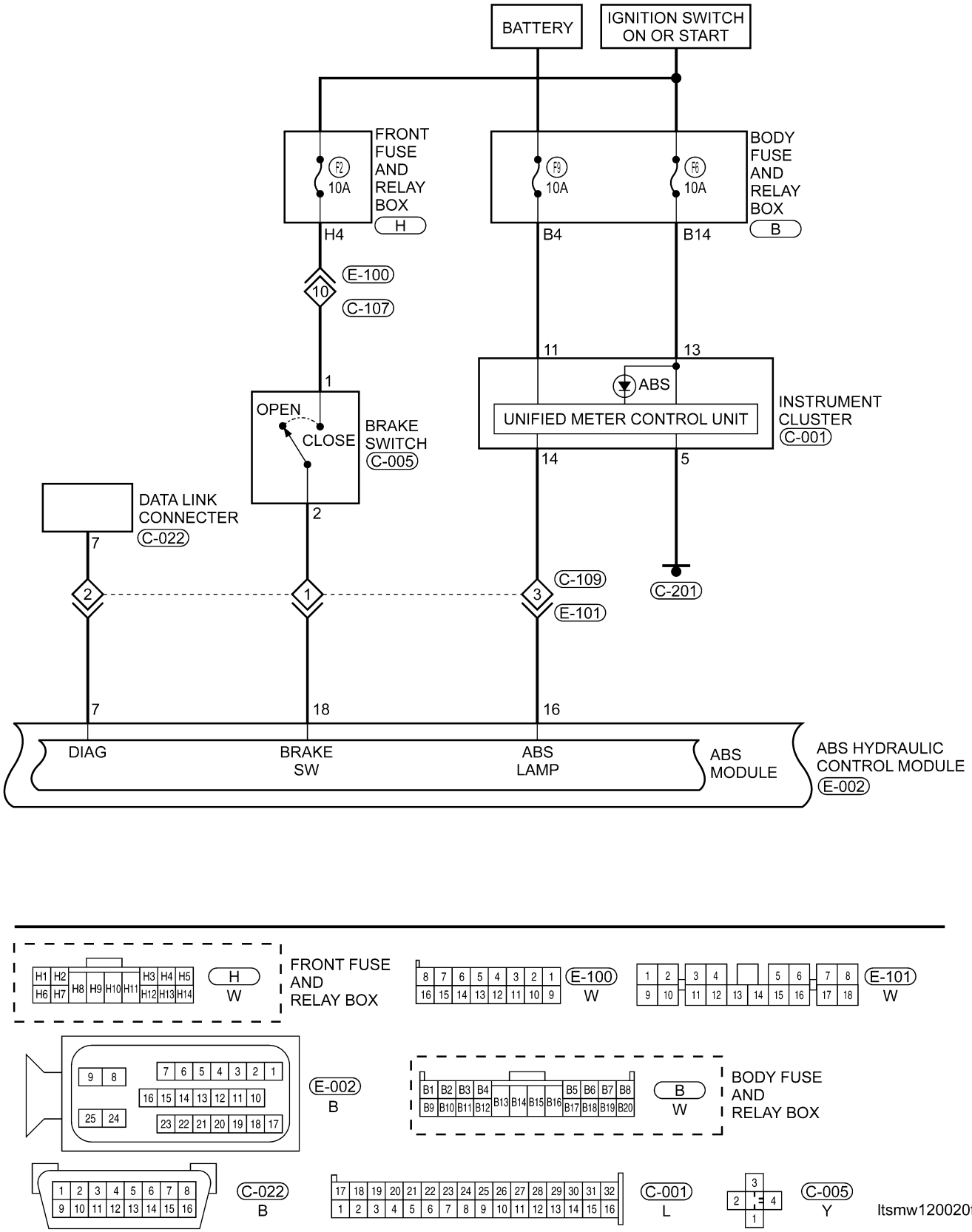

Downloaded from www.Manualslib.com manuals search engine

Antilock Brake System - 1.6L / 1.8L (Page 3 of 3)

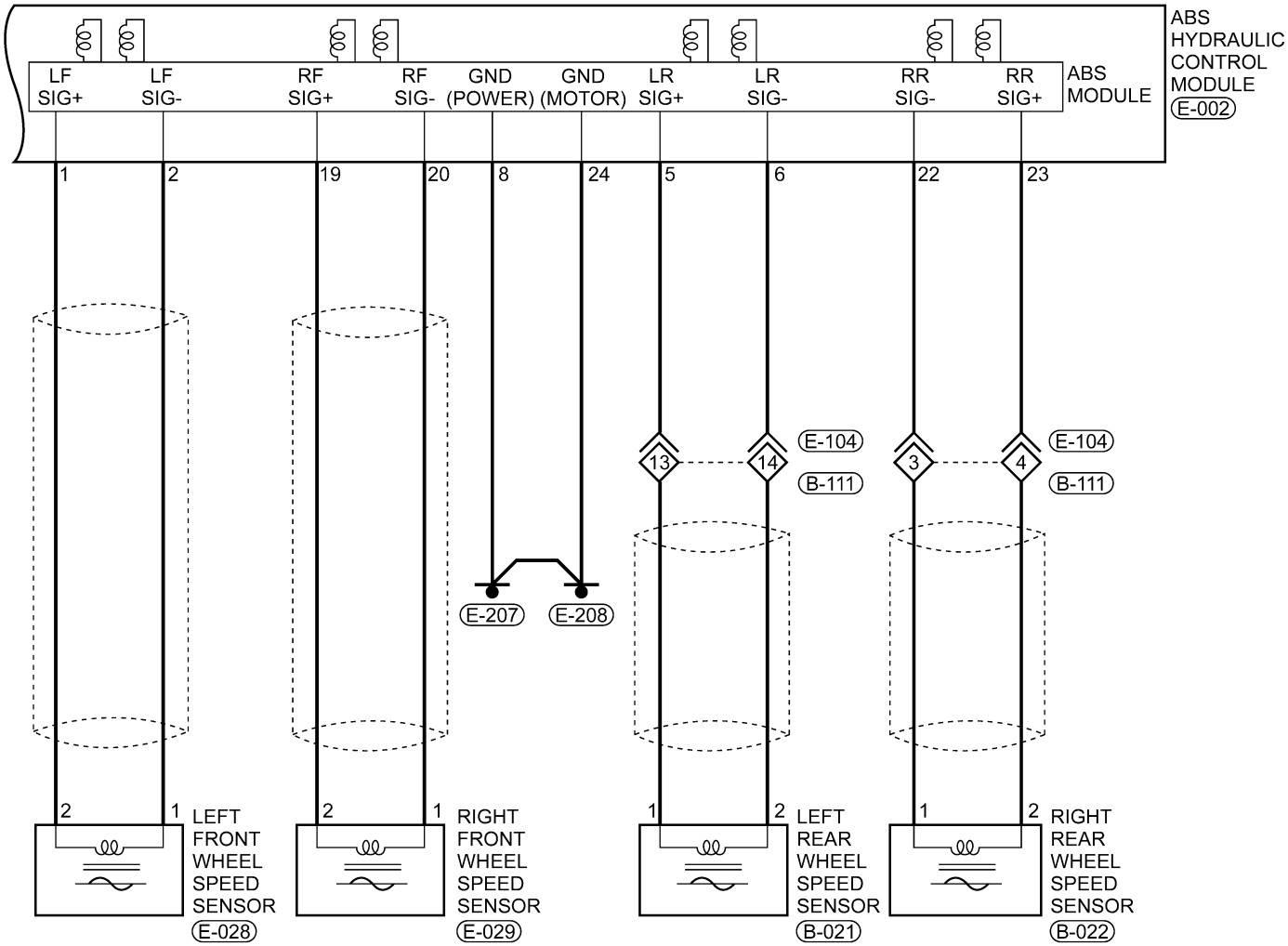

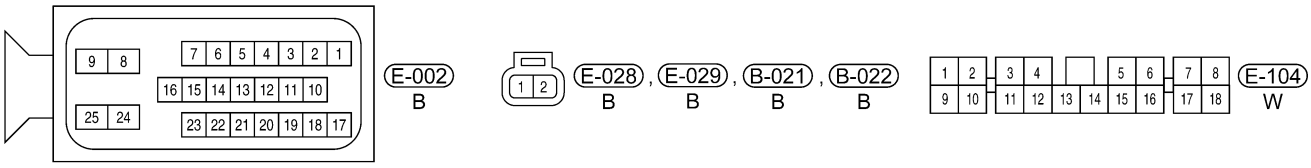

ltsmw120021t

Downloaded from www.Manualslib.com manuals search engine

Antilock Brake System - 2.0L / 2.4L (Page 1 of 3)

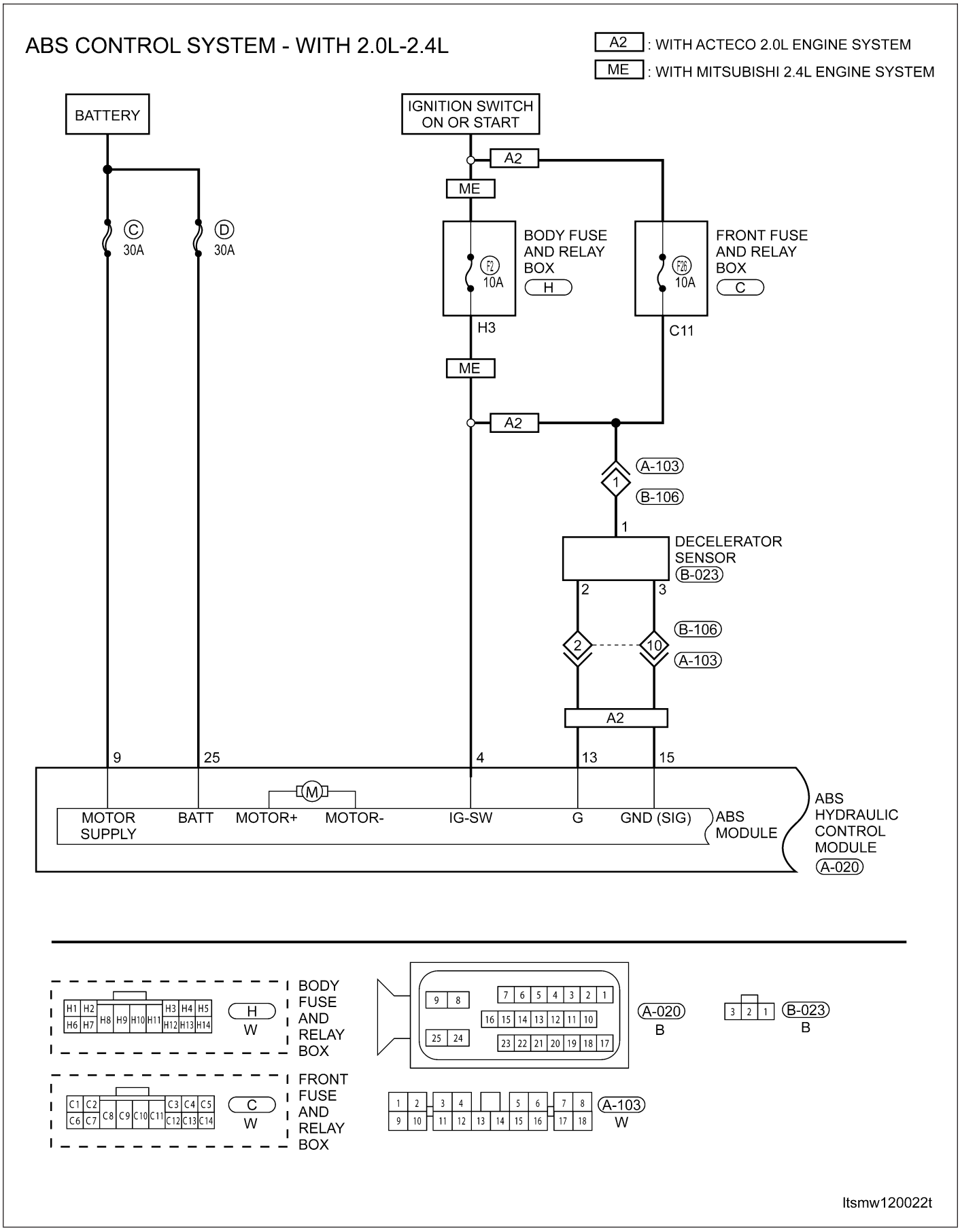

Downloaded from www.Manualslib.com manuals search engine

Antilock Brake System - 2.0L / 2.4L (Page 2 of 3)

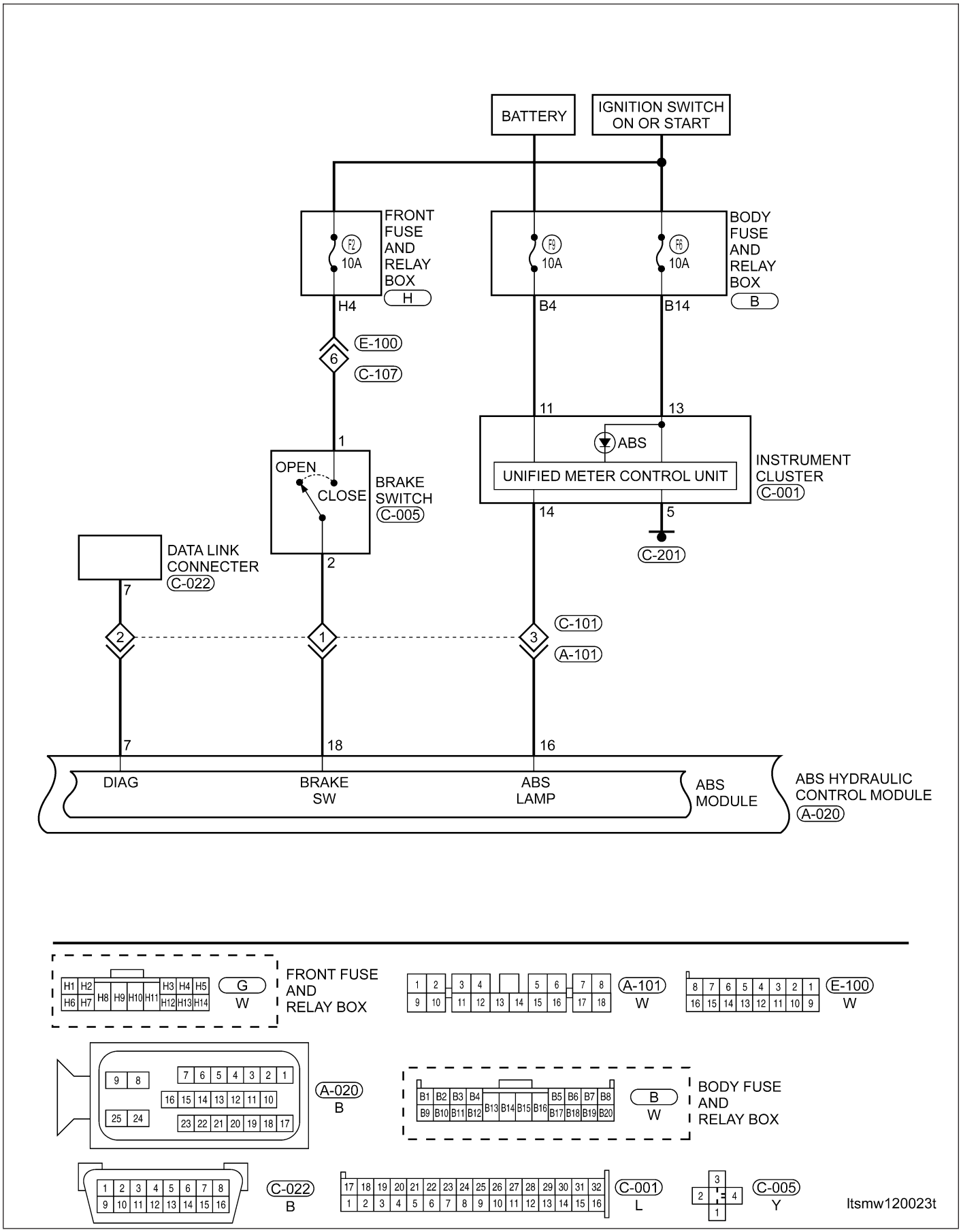

Downloaded from www.Manualslib.com manuals search engine

Antilock Brake System - 2.0L / 2.4L (Page 3 of 3)

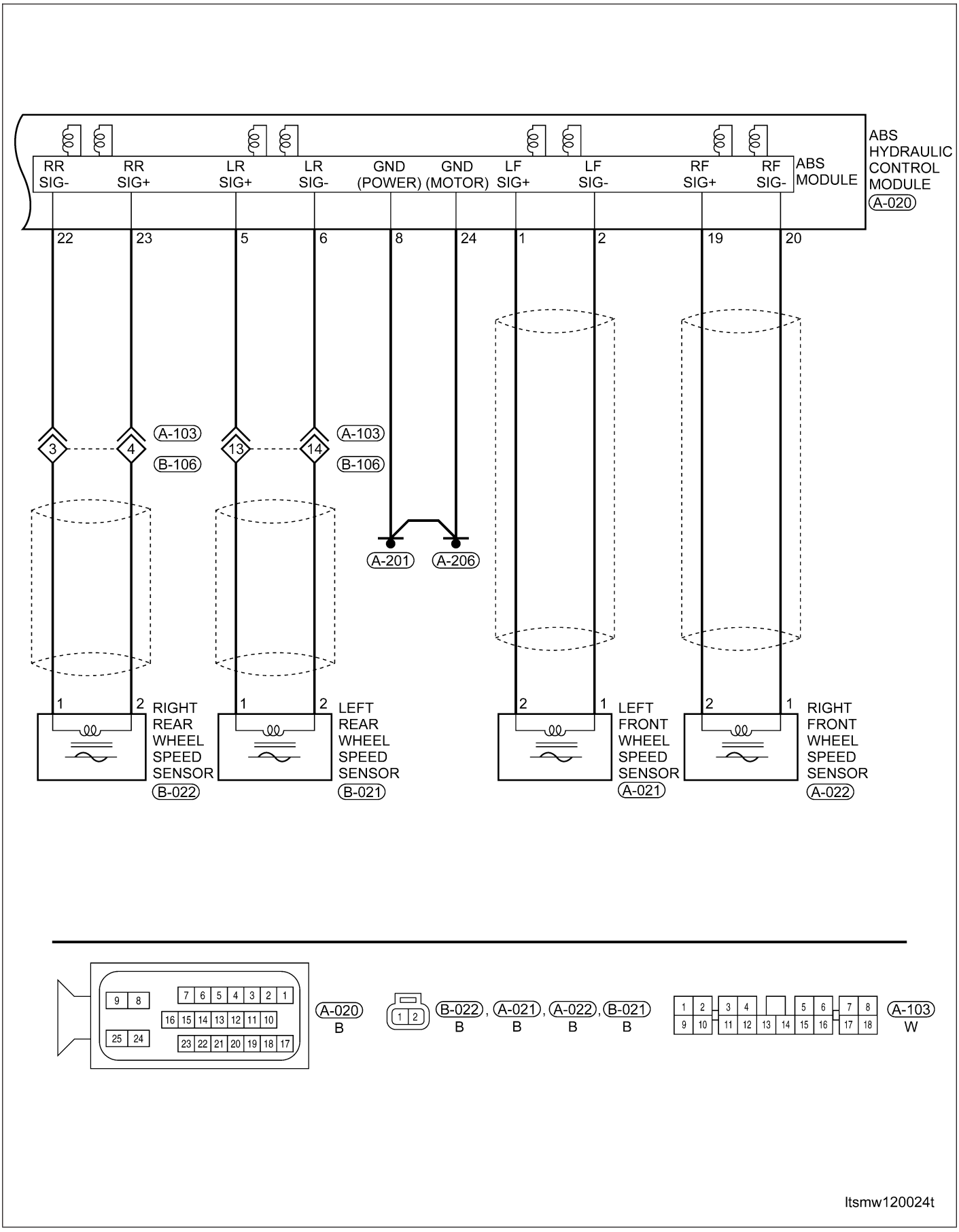

12

Downloaded from www.Manualslib.com manuals search engine

Antilock Brake System (ABS) Module Connector Pin-Out Table

ABS Hydraulic Control Module Connector Pin-Out Table

PIN	CIRCUIT IDENTIFICATION	PIN	CIRCUIT IDENTIFICATION
1	Front Wheel Speed Sensor LH +	14	-
2	Front Wheel Speed Sensor LH -	15	Decelerator Sensor (GND)
3	-	16	ABS Lamp
4	Ignition Switch	17	-
5	Rear Wheel Speed Sensor LH +	18	Brake Switch
6	Rear Wheel Speed Sensor LH -	19	Front Wheel Speed Sensor RH +
7	Diagnostic Link K	20	Front Wheel Speed Sensor RH -
8	GND (Power)	21	-
9	Continuous Supply Voltage (Motor)	22	Rear Wheel Speed Sensor RH +
10	-	23	Rear Wheel Speed Sensor RH -
11	-	24	GND (Motor)
12	-	25	Continuous Supply Voltage
13	Decelerator Sensor (G)	-	-

Downloaded from www.Manualslib.com manuals search engine

DIAGNOSIS & TESTING

Diagnostic Help

Diagnostic Help

1. The X-431 scan tool connects to the Data Link Connector (DLC) and communicates with the vehicle electronic modules through the vehicle data circuits.
2. Confirm that the malfunction is current and carry-out the diagnostic tests and repair procedures.
3. If the Diagnostic Trouble Code (DTC) cannot be deleted, it is a current fault.
4. Use a digital multimeter to perform voltage readings on electronic systems.
5. Refer to any Technical Bulletins that may apply to the failure.
6. Visually inspect the related electrical wiring harness.
7. Perform a voltage drop test on the related circuits between the suspected component and the ABS module.
8. Inspect and clean all ECM, ABS, engine, and chassis grounds that are related to the most current DTC.
9. If numerous trouble codes were set, use an electrical schematic and look for any common ground circuits or voltage supply circuits that may apply to the DTC.
10. For any wheel speed sensor DTCs, inspect for dirt/metal debris.
11. Use the scan tool to perform a System Test if one applies to the failed component.

Intermittent DTC Troubleshooting

If the failure is intermittent perform the following:

- Check for loose connectors.
- Look for any chafed, pierced, pinched, or partially broken wires.
- Monitor the scan tool data relative to this circuit.
- Wiggle the related electrical wiring harness and connectors while looking for an interrupted signal on the affected circuit.
- If possible, try to duplicate the conditions under which the DTC set.
- Look for the data to change or for the DTC to reset during the wiggle test.
- Look for broken, bent, pushed out or corroded terminals.
- Inspect the sensor and mounting area for any condition that would result in an incorrect signal, such as damage, foreign material.
- A data recorder, and/or oscilloscope should be used to help diagnose intermittent conditions.
- Remove the ABS module from the troubled vehicle and install in a new vehicle and test. If the DTC cannot be deleted, the ABS module is malfunctioning. If the DTC can be deleted, return the ABS module to the original vehicle.

Ground Inspection

Ground connections are very important to the proper operation of electrical and electronic circuits. Ground connections are often exposed to moisture, dirt and other corrosive elements. The corrosion (rust) can become an unwanted resistance. This added resistance can affect the way a circuit works.

Electronically controlled circuits are very sensitive to proper grounding. A loose or corroded ground can drastically affect an electronically controlled circuit. A poor or corroded ground can affect the circuit. Perform the following when inspecting a ground connection:

1. Remove the ground bolt or screw.
2. Inspect all mating surface for tarnish, dirt, rust, etc.
3. Clean as required to assure good contact.
4. Reinstall bolt or screw securely.
5. Inspect for ″add-on″ accessories which may be interfering with the ground circuit.
6. If several wires are crimped into one ground eyelet terminal, check for proper crimps. Make sure all of the wires are clean, securely fastened and providing a good ground path. If multiple wires are crimped to one eyelet, make sure no excess wire insulation has been crimped creating a bad ground.

Downloaded from www.Manualslib.com manuals search engine

Diagnostic Tools

- Diagnostic Scan Tool X-431
- Digital Multimeter
- Jumper Wire

Diagnostic Trouble Code (DTC) List

Antilock Brake System DTC List

DTC	DTC DEFINITION
C1101	Battery Voltage High (>18 Volt)
C1102	Battery Voltage Low (<18 Volt)
C1200	Left Front Wheel Speed Sensor Circuit Open or Short to Ground
C1201	Range/Performance: Speed Jump Or Damaged Exciter
C1202	No Signal: Air-Gap Error Or Wrong Exciter
C1203	Right Front Wheel Speed Sensor Circuit Open or Short to Ground
C1204	Range/Performance: Speed Jump Or Damaged Exciter
C1205	No Signal: Air-Gap Error Or Wrong Exciter
C1206	Left Rear Wheel Speed Sensor Circuit Open or Short to Ground
C1207	Range/Performance: Speed Jump Or Damaged Exciter
C1208	No Signal: Air-Gap Error Or Wrong Exciter
C1209	Right Rear Wheel Speed Sensor Circuit Open or Short to Ground
C1210	Range/Performance: Speed Jump Or Damaged Exciter
C1211	No Signal: Air-Gap Error Or Wrong Exciter
C1275	G Sensor Open Or Short To Ground
C1274	G Sensor Signal Fixed Signal
C1604	ECU Hardware: ECU Internal Or Valve Failure
C2112	Valve Relay: Valve Relay Or Fuse Failure
C2402	Motor - Electrical: Open Or Short To Battery, Motor Relay, Fuse Or Motor Lock Fail

Downloaded from www.Manualslib.com manuals search engine

Diagnostic Trouble Code (DTC) Tests

C1101 - Battery Voltage High
C1102 - Battery Voltage Low

BRC - 1.6L - 1.8L - PWR - 01

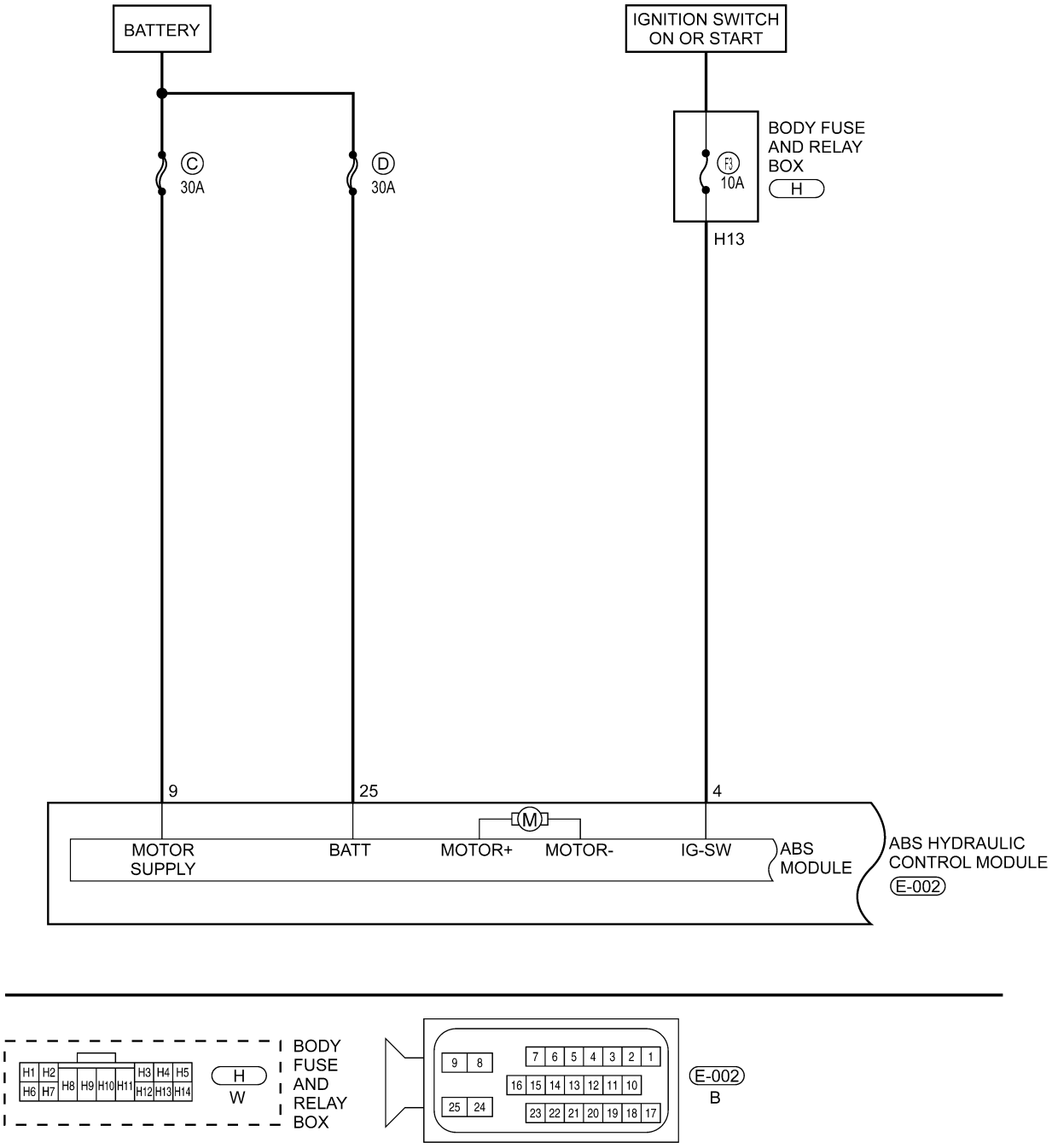

ltsmw120010t

Downloaded from www.Manualslib.com manuals search engine

BRC - 1.6L - 1.8L - PWR - 02

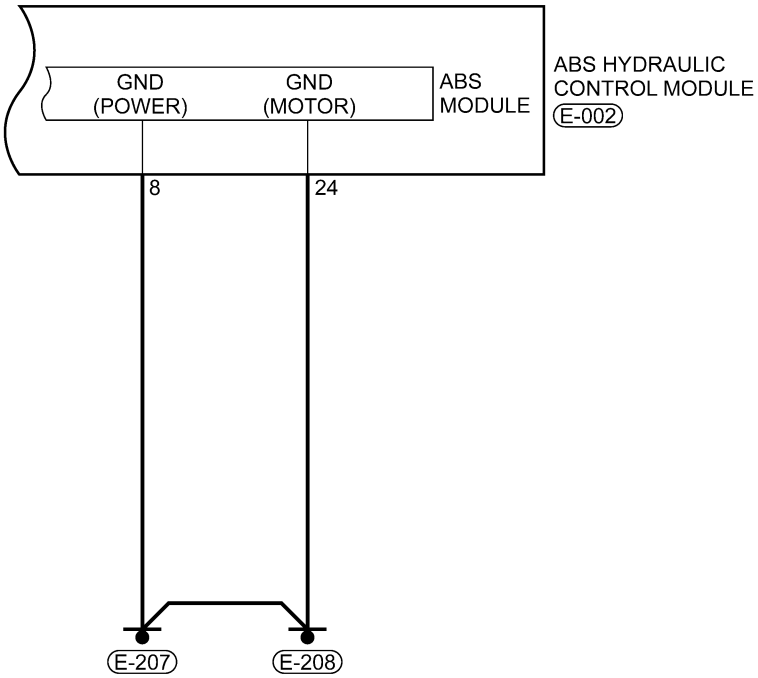

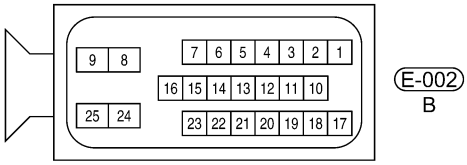

ltsmw120011t

Downloaded from www.Manualslib.com manuals search engine

BRC - 2.0L - 2.4L - PWR - 01

A2 : WITH ACTECO 2.0L ENGINE SYSTEM
ME : WITH MITSUBISHI 2.4L ENGINE SYSTEM

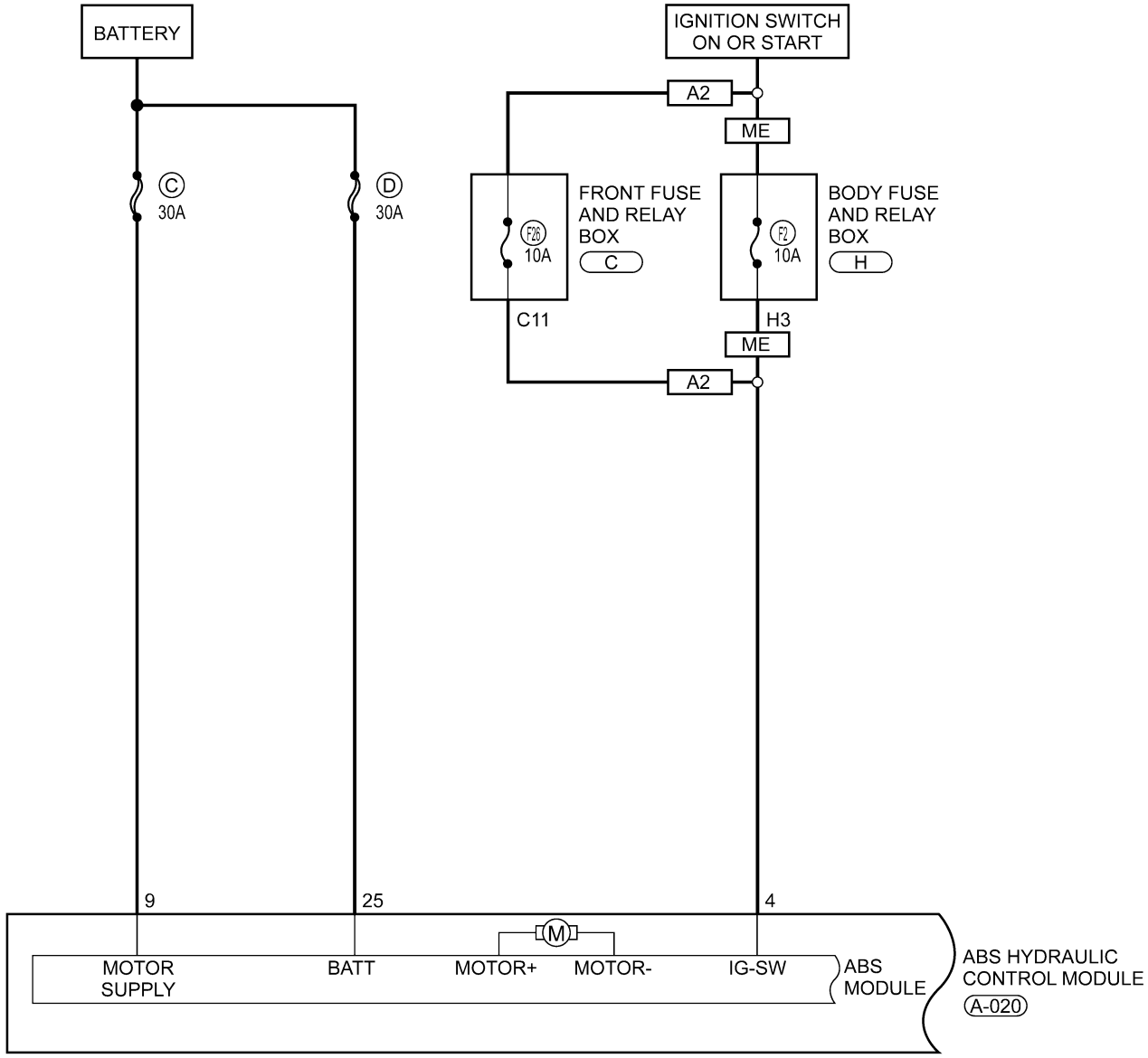

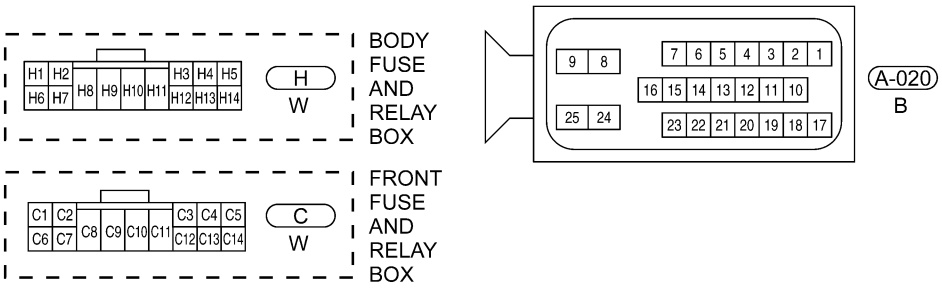

ltsmw120002t

Downloaded from www.Manualslib.com manuals search engine

BRC - 2.0L - 2.4L - PWR - 02

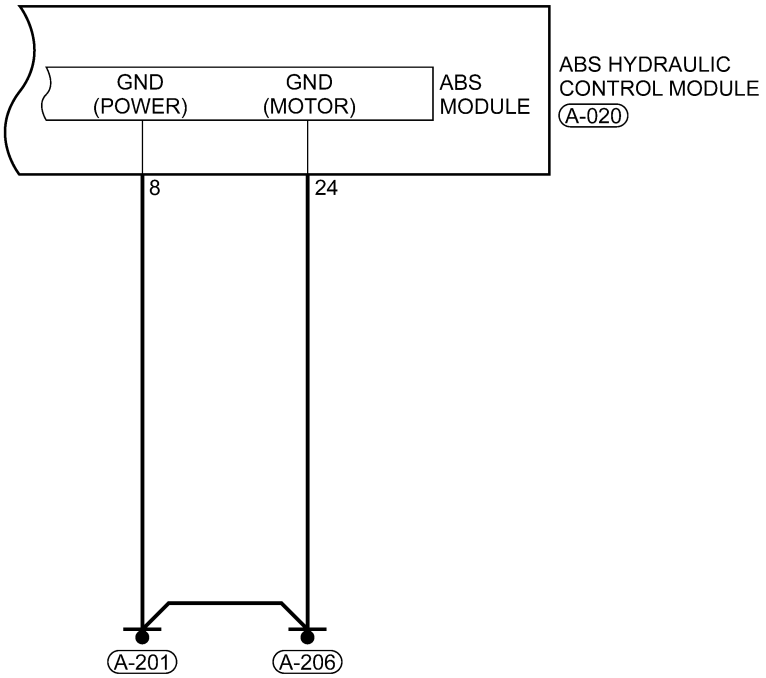

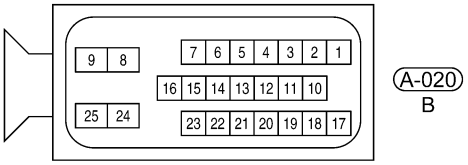

ltsmw120003t

Downloaded from www.Manualslib.com manuals search engine

On Board Diagnostic Logic

- Self-diagnosis detection logic.

DTC NO.	DTC DEFINITION	DTC DETECTION CONDITION	DTC SET CONDITION	POSSIBLE CAUSE
C1101	Battery Voltage High (Above 18 V)	Ignition switch: ON	ABS module detected that the battery voltage is excessively high.	• Charging system • ABS module
C1102	Battery Voltage Low (Below 9.5 V)		ABS module detected that the battery voltage is excessively low.	• Battery • Harness is shorted • Charging system • ABS module

DTC Confirmation Procedure:

Before performing the following procedure, confirm that battery voltage is more than 12 V.

- Turn ignition switch off.
- Connect the X-431 scan tool to the Data Link Connector (DLC) - use the most current software available.
- Turn ignition switch on.
- With the scan tool, record and erase stored DTCs in the ABS module.
- Start the engine and warm it to normal operating temperature.
- Turn ignition switch off and wait for a few seconds.
- Turn ignition switch ON then select view DTC.
- If the DTC is detected, the DTC condition is current. Go to Diagnostic Procedure - Step 1.
- If the DTC is not detected, the DTC condition is intermittent (See Diagnostic Help and Intermittent DTC Troubleshooting in Section 12 Brakes for more information.

NOTE :
While performing electrical diagnosis & testing, always refer to the electrical schematics for specific circuit and component information.

Diagnostic Procedure

1. CHECK GROUND CONNECTIONS

- Turn ignition switch off.
- Loosen and retighten ground screws on the body (See Ground Inspection in Section 12 Brakes).
- The ground connections E-207 and E-208 mounting position (See Vehicle Wiring Harness Layout - Engine Room Harness With 1.6L & 1.8L Engine in Section 16 Wiring).
- The ground connections A-201 and A-206 mounting position (See Vehicle Wiring Harness Layout - Engine Room Harness With 2.0L & 2.4L Engine in Section 16 Wiring).

Are the ground connections OK?

Yes >> Go to the next step.

No >> Repair or replace the ground connections.

2. CHECK ABS MODULE ELECTRICAL CONNECTOR

- Disconnect the ABS module electrical connector.
- Inspect the electrical connector for damage.

Is the electrical connector OK?

Yes >> Go to the next step.

No >> Repair or replace the electrical connector as necessary.

Downloaded from www.Manualslib.com manuals search engine

3. CHECK ABS MODULE POWER SUPPLY

- Turn ignition switch on
- Check ABS module power supply between terminal 4 and terminal 8, 24 in the ABS module electrical connector A-020 or E-002 terminal side.

Is the voltage between 9.4 - 17 V?

Yes >> Replace the ABS module.

No >> If the voltage is less than 9.4 V, go to step 4.
If the voltage is more than 17 V, go to step 7.

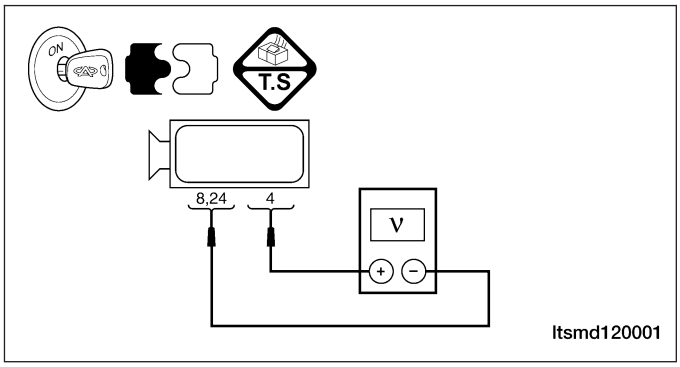

4. CHECK SYSTEM VOLTAGE

- Connect ABS module connector.
- Start the engine, raise the speed over 1000 RPM.
- Measure the charging voltage at the battery positive and negative terminals.

Is the voltage less than 9.4 V?

Yes >> Replace the AC generator.

No >> Go to the next step.

5. CHECK THE BATTERY

- Start the engine, raise the engine speed to over 1000 RPM for a few minutes.
- Turn ignition switch off.
- Measure the voltage drop at the battery positive and negative terminals while cranking the engine.
- Battery voltage should be more than approximately 9.4 V.

Is the check result normal?

Yes >> Go to step 6.

No >> Charge or replace the battery.

6. CHECK ABS MODULE POWER SUPPLY CIRCUIT

- Measure the continuity between the ABS module terminal 4 and the battery positive terminal.
- Continuity should exist.

Is the check result normal?

Yes >> Go to the next step.

No >> Check fuse.
Check the harness.
Check all related components.

Downloaded from www.Manualslib.com manuals search engine

7. CHECK SYSTEM VOLTAGE

- Maintain engine speed to over 1000 RPM.
- Measure the charging voltage at the battery positive and negative terminals.

Is the voltage more than 17 V?

Yes >> Replace the AC generator.

No >> Go to the next step.

8. CHECK DTC

- With the X-431 scan tool, read ABS module DTCs.
- Refer to ″DTC Confirmation Procedure″.

Is DTC C1101 or C1102 still present?

Yes >> Replace the ABS module.

No >> The system is now operating properly.
Erase all codes and test drive the vehicle to verify the repair is complete.

Downloaded from www.Manualslib.com manuals search engine

C1200 - Left Front Wheel Speed Sensor Circuit Open or Shorted

BRC - 1.6L - 1.8L - FLS - 01

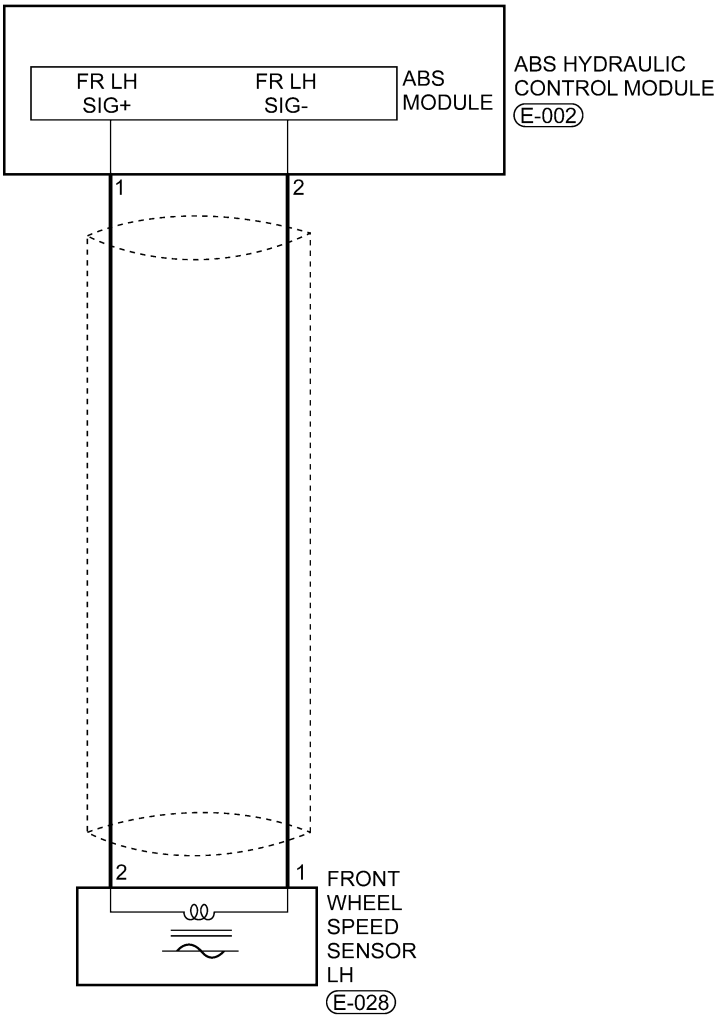

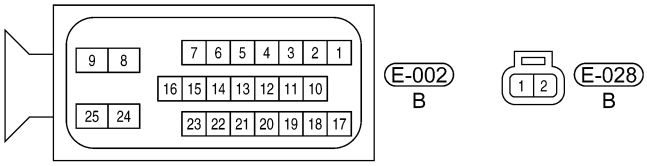

ltsmw120012t

Downloaded from www.Manualslib.com manuals search engine

BRC - 2.0L - 2.4L - FLS - 01

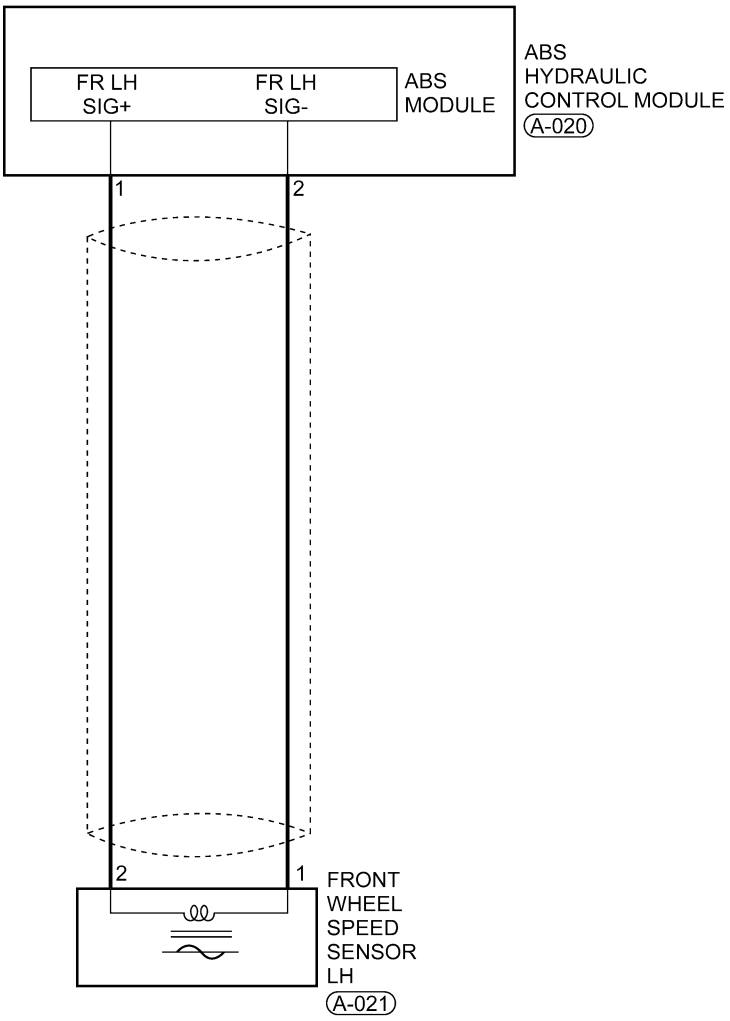

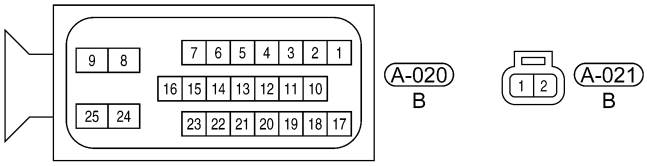

ltsmw120004t

Downloaded from www.Manualslib.com manuals search engine

On Board Diagnostic Logic

- Self-diagnosis detection logic.

DTC NO.	DTC DEFINITION	DTC DETECTION CONDITION	DTC SET CONDITION	POSSIBLE CAUSE
C1200	Left front wheel speed sensor circuit open or shorted	• Ignition switch: ON • Vehicle: Running	ABS module detected that the Left Front wheel speed sensor input signal to ABS module is open or shorted.	• Left Front wheel speed sensor • Harness is open or shorted • ABS module

DTC Confirmation Procedure:

Before performing the following procedure, confirm that battery voltage is more than 12 V.

- Turn ignition switch off.
- Connect the X-431 scan tool to the Data Link Connector (DLC) - use the most current software available.
- Turn ignition switch on.
- With the scan tool, record and erase stored DTCs in the ABS module.
- Cycle the ignition switch from off to on.
- Start the engine and warm it to normal operating temperature.
- Turn ignition switch off and wait for a few seconds.
- Start the engine. With the scan tool connected to the DLC, drive the vehicle over 40 km/h (25 mph).

NOTE :

Vehicle must be driven above 40 km/h (25 mph) for fault setting conditions to be met.

- With the scan tool select: View ABS Data Stream and DTC.
- If the DTC is detected, the DTC condition is current. Go to Diagnostic Procedure - Step 1.
- If the DTC is not detected, the DTC condition is intermittent (See Diagnostic Help and Intermittent DTC Troubleshooting in Section 12 Brakes for more information).
- Erase all codes and test drive the vehicle to verify the repair is complete.

NOTE :

While performing electrical diagnosis & testing, always refer to the electrical schematics for specific circuit and component information.

Diagnostic Procedure

1. CHECK ABS MODULE DTC

- With the scan tool select: View ABS Data Stream.
- With an assistant driving the vehicle, check the following data stream list items while driving the vehicle over 40 km/h (25 mph).
  - Left Front Wheel Speed
  - Right Front Wheel Speed
  - Left Rear Wheel Speed
  - Right Rear Wheel Speed
- With the scan tool, read active DTCs in the ABS module.

Is DTC C1200 present and the Left Front Wheel Speed signal abnormal?

Yes >> Go to the next step.

No >> The condition that caused this DTC to set is currently not present (See Diagnostic Help and Intermittent DTC Troubleshooting in Section 12 Brakes for more information).

Downloaded from www.Manualslib.com manuals search engine

2. CHECK LEFT FRONT WHEEL SPEED SENSOR ELECTRICAL CONNECTOR

- Turn ignition switch off.
- Disconnect the wheel speed sensor (1) electrical connector.
- Inspect the wheel speed sensor electrical connector for damage.

Is the electrical connector OK?

Yes >> Go to the next step.

No >> Repair or replace the electrical connector as necessary.

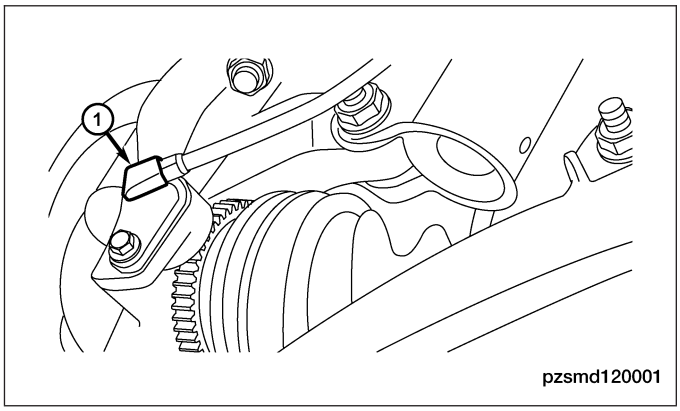

3. CHECK LEFT FRONT WHEEL SPEED SENSOR REFERENCE SIGNAL CIRCUIT

- Turn ignition switch on.
- Measure the sensor reference voltage between terminal 2 of the wheel speed sensor connector, terminal side and ground.
- Voltage should exist (2.0 - 4.0 V).

Is the proper voltage present?

Yes >> Go to the next step.

No >> Repair or replace the circuit for an open, short to ground or short to battery in connector or harness.

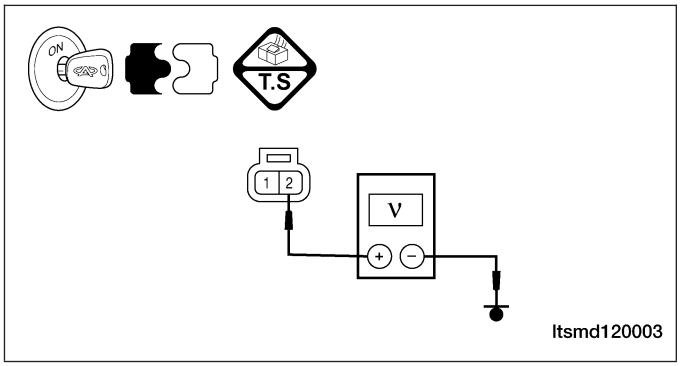

4. CHECK LEFT FRONT WHEEL SPEED SENSOR RESISTANCE

- Check the wheel speed sensor resistance between the sensor terminals 1 and 2, component side.

Is the sensor resistance 700 - 1500 ohms?

Yes >> Go to the next step.

No >> Replace the Left Front wheel speed sensor.

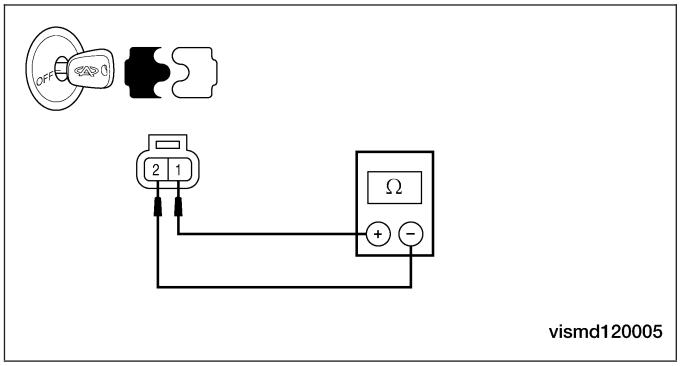

Downloaded from www.Manualslib.com manuals search engine

5. CHECK LEFT FRONT WHEEL SPEED SENSOR GROUND CIRCUIT FOR AN OPEN

- Turn ignition switch off.
- Disconnect the ABS module electrical connector.
- For 1.6L/1.8L engine: Check the continuity between terminal 2 of the ABS module connector E-002, and terminal 1 of the Left Front wheel speed sensor connector E-028, terminal side.
- For 2.0L/2.4L engine: Check the continuity between terminal 2 of the ABS module connector A-020, and terminal 1 of the Left Front wheel speed sensor connector B-021, terminal side.
- Continuity should exist.

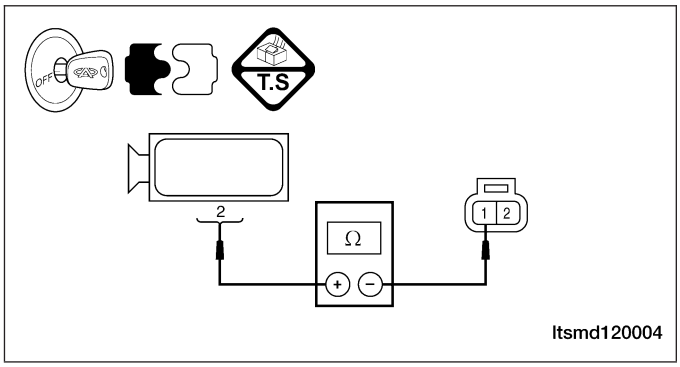

Is the check result normal?

Yes >> Go to the next step.

No >> Repair or replace the circuit for an open.

6. CHECK LEFT FRONT WHEEL SPEED SENSOR GROUND CIRCUIT FOR A SHORT TO GROUND

- Check the continuity between terminal 1 of the Left Front wheel speed sensor connector, terminal side and ground.
- Continuity should not exist.

Is the check result normal?

Yes >> Go to the next step.

No >> Repair or replace the circuit for a short to ground.

7. CHECK LEFT FRONT WHEEL SPEED SENSOR GROUND CIRCUIT FOR A SHORT TO VOLTAGE

- Check the voltage between terminal 1 of the Left Front wheel speed sensor connector, terminal side and ground.
- Voltage should not exist.

Is the check result normal?

Yes >> Go to the next step.

No >> Repair or replace the circuit for a short to battery.

8. CHECK DTC

- With the X-431 scan tool, read the ABS module DTCs.
- Refer to ″DTC Confirmation Procedure″.

Is DTC C1200 present?

Yes >> Replace the ABS module (See ABS Module Removal & Installation in Section 12 Brakes).

No >> The system is now operating properly.
Erase all codes and test drive the vehicle to verify the repair is complete.

Downloaded from www.Manualslib.com manuals search engine

C1203 - Right Front Wheel Speed Sensor Circuit Open or Shorted

BRC - 1.6L - 1.8L - FRS - 01

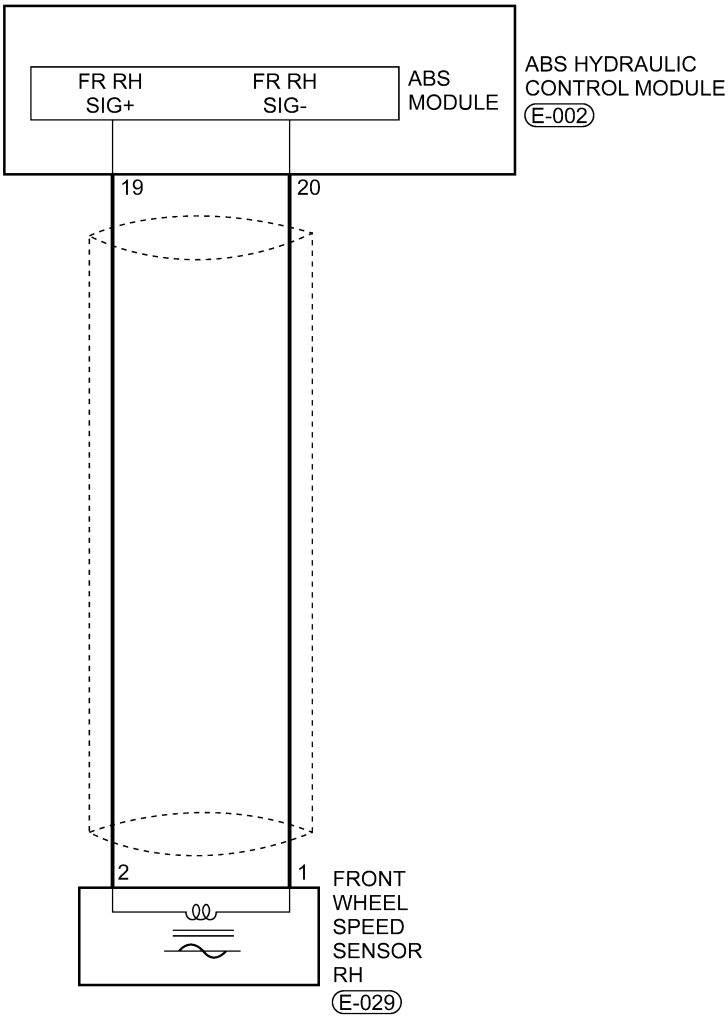

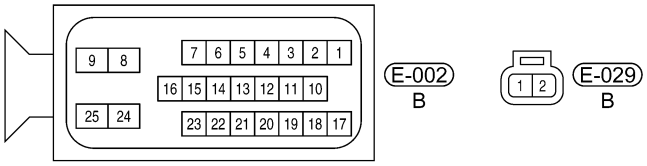

ltsmw120013t

Downloaded from www.Manualslib.com manuals search engine

BRC - 2.0L - 2.4L - FRS - 01

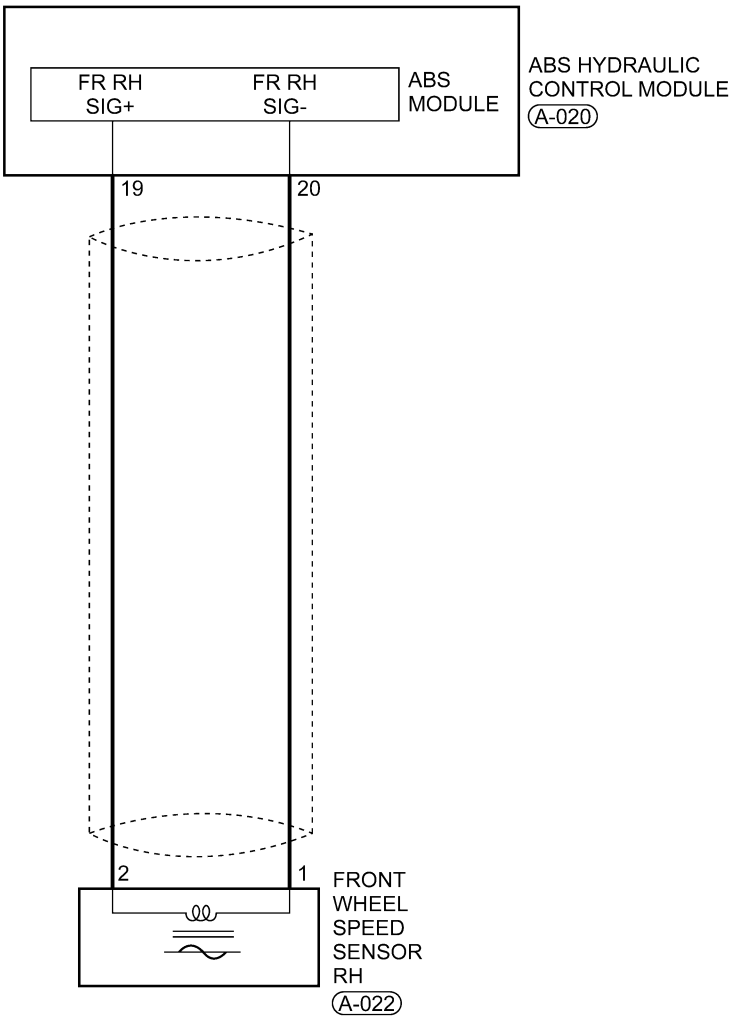

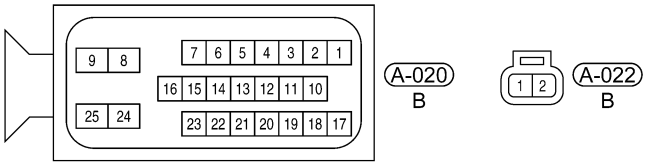

ltsmw120005t

Downloaded from www.Manualslib.com manuals search engine

On Board Diagnostic Logic

- Self-diagnosis detection logic.

DTC NO.	DTC DEFINITION	DTC DETECTION CONDITION	DTC SET CONDITION	POSSIBLE CAUSE
C1203	Right front wheel speed sensor circuit open or shorted	• Ignition switch: ON • Vehicle: Running	ABS module detected that the Right Front wheel speed sensor input signal to ABS module is open or shorted.	• Right Front wheel speed sensor • Harness is open or shorted • ABS module

DTC Confirmation Procedure:

Before performing the following procedure, confirm that battery voltage is more than 12 V.

- Turn ignition switch off.
- Connect the X-431 scan tool to the Data Link Connector (DLC) - use the most current software available.
- Turn ignition switch on.
- With the scan tool, record and erase stored DTCs in the ABS module.
- Cycle the ignition switch from off to on.
- Start the engine and warm it to normal operating temperature.
- Turn ignition switch off and wait for a few seconds.
- Start the engine. With the scan tool connected to the DLC, drive the vehicle over 40 km/h (25 mph).

NOTE :

Vehicle must be driven above 40 km/h (25 mph) for fault setting conditions to be met.

- With the scan tool select: View ABS Data Stream and DTC.
- If the DTC is detected, the DTC condition is current. Go to Diagnostic Procedure - Step 1.
- If the DTC is not detected, the DTC condition is intermittent (See Diagnostic Help and Intermittent DTC Troubleshooting in Section 12 Brakes for more information).
- Erase all codes and test drive the vehicle to verify the repair is complete.

NOTE :

While performing electrical diagnosis & testing, always refer to the electrical schematics for specific circuit and component information.

Diagnostic Procedure

1. CHECK ABS MODULE DTC

- With the scan tool select: View ABS Data Stream.
- With an assistant driving the vehicle, check the following data stream list items while driving the vehicle over 40 km/h (25 mph).
  - Left Front Wheel Speed
  - Right Front Wheel Speed
  - Left Rear Wheel Speed
  - Right Rear Wheel Speed
- With the scan tool, read active DTCs in the ABS module.

Is DTC C1203 present and the Right Front Wheel Speed signal abnormal?

Yes >> Go to the next step.

No >> The condition that caused this DTC to set is currently not present (See Diagnostic Help and Intermittent DTC Troubleshooting in Section 12 Brakes for more information).

Downloaded from www.Manualslib.com manuals search engine

2. CHECK RIGHT FRONT WHEEL SPEED SENSOR ELECTRICAL CONNECTOR

- Turn ignition switch off.
- Disconnect the wheel speed sensor (1) electrical connector.
- Inspect the wheel speed sensor electrical connector for damage.

Is the electrical connector OK?

Yes >> Go to the next step.

No >> Repair or replace the electrical connector as necessary.

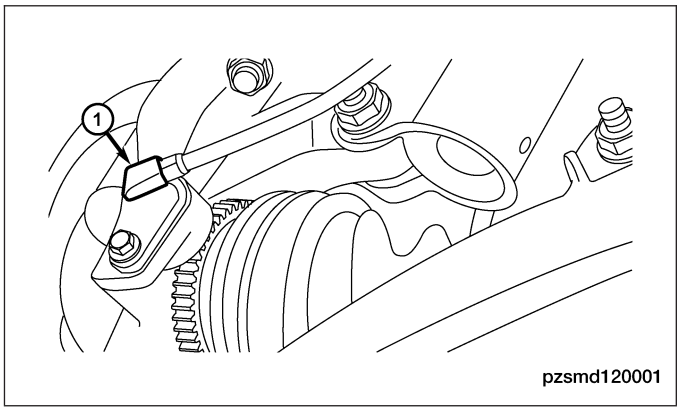

3. CHECK RIGHT FRONT WHEEL SPEED SENSOR REFERENCE SIGNAL CIRCUIT

- Turn ignition switch on.
- Measure the sensor reference voltage between terminal 2 of the wheel speed sensor connector, terminal side and ground.
- Voltage should exist (2.0 - 4.0 V).

Is the proper voltage present?

Yes >> Go to the next step.

No >> Repair or replace the circuit for an open, short to ground or short to battery in connector or harness.

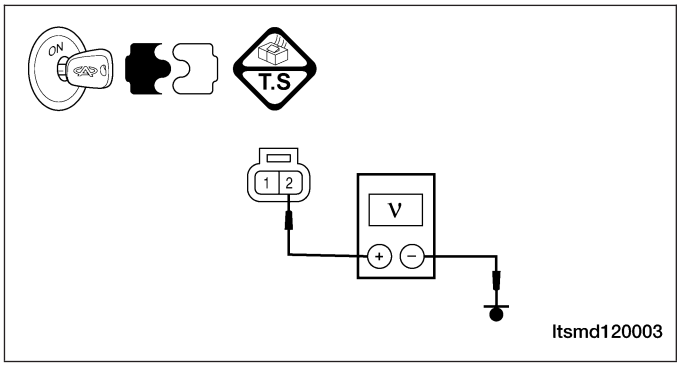

4. CHECK RIGHT FRONT WHEEL SPEED SENSOR RESISTANCE

- Check the wheel speed sensor resistance between the sensor terminals 1 and 2, component side.

Is the sensor resistance 700 - 1500 ohms?

Yes >> Go to the next step.

No >> Replace the Right Front wheel speed sensor.

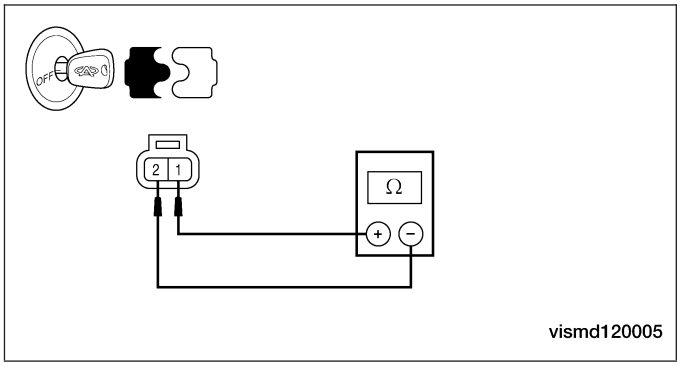

Downloaded from www.Manualslib.com manuals search engine

5. CHECK RIGHT FRONT WHEEL SPEED SENSOR GROUND CIRCUIT FOR AN OPEN

- Turn ignition switch off.
- Disconnect the ABS module electrical connector.
- For 1.6L/1.8L engine: Check the continuity between terminal 20 of the ABS module connector E-002, and terminal 1 of the Right Front wheel speed sensor connector E-029, terminal side.
- For 2.0L/2.4L engine: Check the continuity between terminal 20 of the ABS module connector A-020, and terminal 1 of the Right Front wheel speed sensor connector A-022, terminal side.
- Continuity should exist.

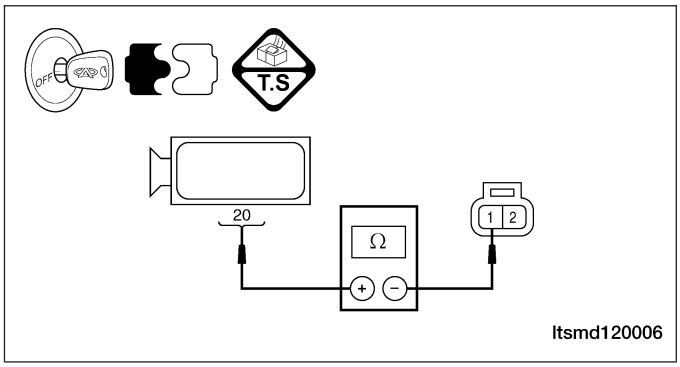

Is the check result normal?

Yes >> Go to the next step.

No >> Repair or replace the circuit for an open.

6. CHECK RIGHT FRONT WHEEL SPEED SENSOR GROUND CIRCUIT FOR A SHORT TO GROUND

- Check the continuity between terminal 1 of the Right Front wheel speed sensor connector, terminal side and ground.
- Continuity should not exist.

Is the check result normal?

Yes >> Go to the next step.

No >> Repair or replace the circuit for a short to ground.

7. CHECK RIGHT FRONT WHEEL SPEED SENSOR GROUND CIRCUIT FOR A SHORT TO VOLTAGE

- Check the voltage between terminal 1 of the Right Front wheel speed sensor connector, terminal side and ground.
- Voltage should not exist.

Is the check result normal?

Yes >> Go to the next step.

No >> Repair or replace the circuit for a short to battery.

8. CHECK DTC

- With the X-431 scan tool, read the ABS module DTCs.
- Refer to ″DTC Confirmation Procedure″.

Is DTC C1203 present?

Yes >> Replace the ABS module (See ABS Module Removal & Installation in Section 12 Brakes).

No >> The system is now operating properly.
Erase all codes and test drive the vehicle to verify the repair is complete.

Downloaded from www.Manualslib.com manuals search engine

C1206 - Left Rear Wheel Speed Sensor Circuit Open or Shorted

BRC - 1.6L - 1.8L - RLS - 01

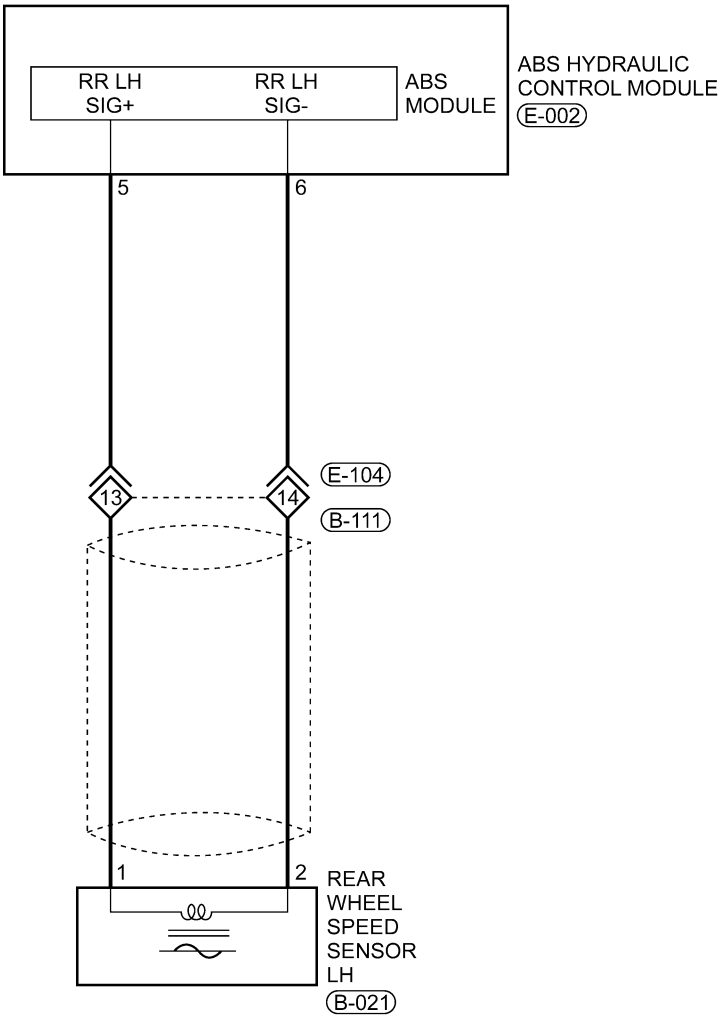

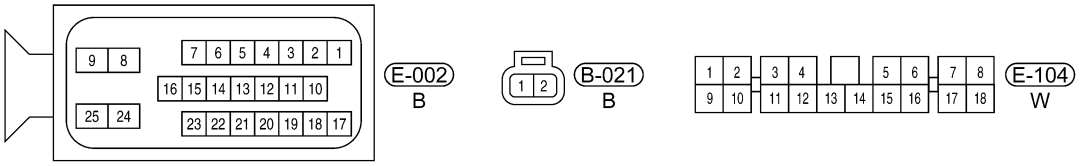

ltsmw120014t

Downloaded from www.Manualslib.com manuals search engine

BRC - 2.0L - 2.4L - RLS - 01

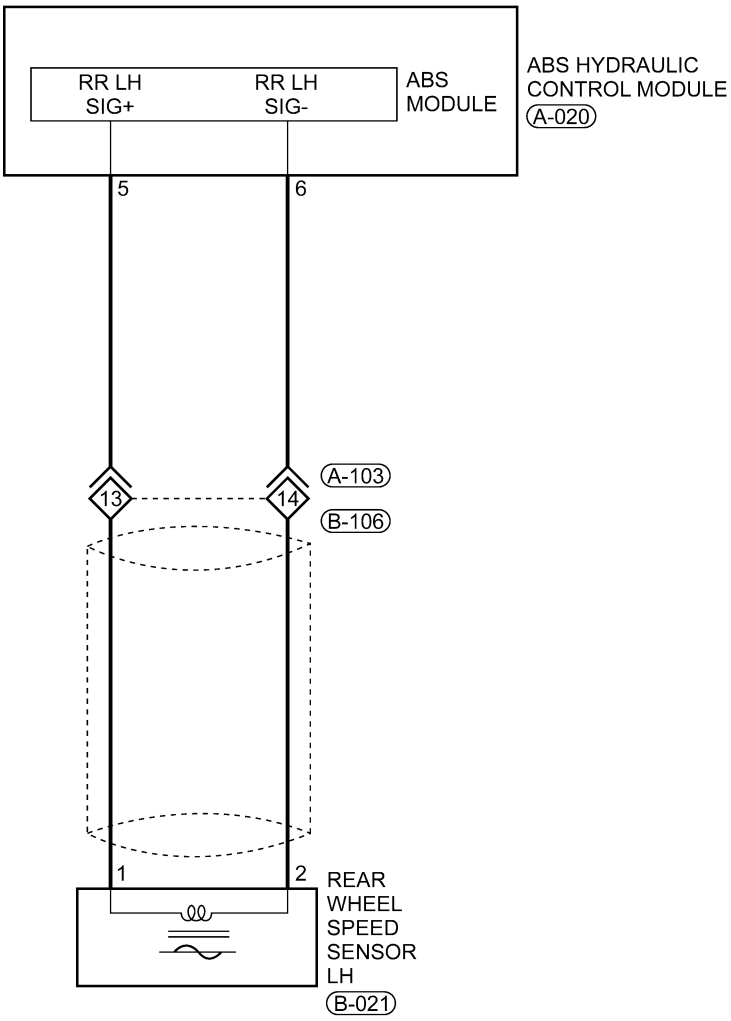

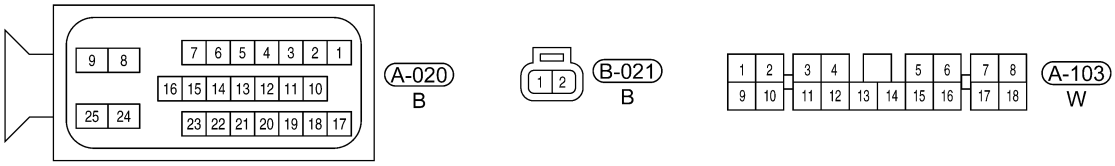

ltsmw120006t

Downloaded from www.Manualslib.com manuals search engine

On Board Diagnostic Logic

- Self-diagnosis detection logic.

DTC NO.	DTC DEFINITION	DTC DETECTION CONDITION	DTC SET CONDITION	POSSIBLE CAUSE
C1206	Left rear wheel speed sensor circuit open or shorted	• Ignition switch: ON • Vehicle: Running	ABS module detected that the Left Rear wheel speed sensor input signal to ABS module is open or shorted.	• Left Rear wheel speed sensor • Harness is open or shorted • ABS module

DTC Confirmation Procedure:

Before performing the following procedure, confirm that battery voltage is more than 12 V.
- Turn ignition switch off.
- Connect the X-431 scan tool to the Data Link Connector (DLC) - use the most current software available.
- Turn ignition switch on.
- With the scan tool, record and erase stored DTCs in the ABS module.
- Cycle the ignition switch from off to on.
- Start the engine and warm it to normal operating temperature.
- Turn ignition switch off and wait for a few seconds.
- Start the engine. With the scan tool connected to the DLC, drive the vehicle over 40 km/h (25 mph).

NOTE :
Vehicle must be driven above 40 km/h (25 mph) for fault setting conditions to be met.
- With the scan tool select: View ABS Data Stream and DTC.
- If the DTC is detected, the DTC condition is current. Go to Diagnostic Procedure - Step 1.
- If the DTC is not detected, the DTC condition is intermittent (See Diagnostic Help and Intermittent DTC Troubleshooting in Section 12 Brakes for more information).
- Erase all codes and test drive the vehicle to verify the repair is complete.

NOTE :
While performing electrical diagnosis & testing, always refer to the electrical schematics for specific circuit and component information.

Diagnostic Procedure

1. CHECK ABS MODULE DTC

- With the scan tool select: View ABS Data Stream.
- With an assistant driving the vehicle, check the following data stream list items while driving the vehicle over 40 km/h (25 mph).
  - Left Front Wheel Speed
  - Right Front Wheel Speed
  - Left Rear Wheel Speed
  - Right Rear Wheel Speed
- With the scan tool, read active DTCs in the ABS module.

Is DTC C1206 present and the Left Rear Wheel Speed signal abnormal?

Yes >> Go to the next step.

No >> The condition that caused this DTC to set is currently not present (See Diagnostic Help and Intermittent DTC Troubleshooting in Section 12 Brakes for more information).

Downloaded from www.Manualslib.com manuals search engine

2. CHECK LEFT REAR WHEEL SPEED SENSOR ELECTRICAL CONNECTOR

- Turn ignition switch off.
- Disconnect the wheel speed sensor (1) electrical connector.
- Inspect the wheel speed sensor electrical connector.

Is the electrical connector OK?

Yes >> Go to the next step.

No >> Repair or replace the electrical connector as necessary.

3. CHECK LEFT REAR WHEEL SPEED SENSOR REFERENCE SIGNAL CIRCUIT

- Turn ignition switch on.
- Measure the sensor reference voltage between terminal 2 of the wheel speed sensor connector, terminal side and ground.
- Voltage should exist (2.0 - 4.0 V).

Is the proper voltage present?

Yes >> Go to the next step.

No >> Repair or replace the circuit for an open, short to ground or short to battery in connector or harness.

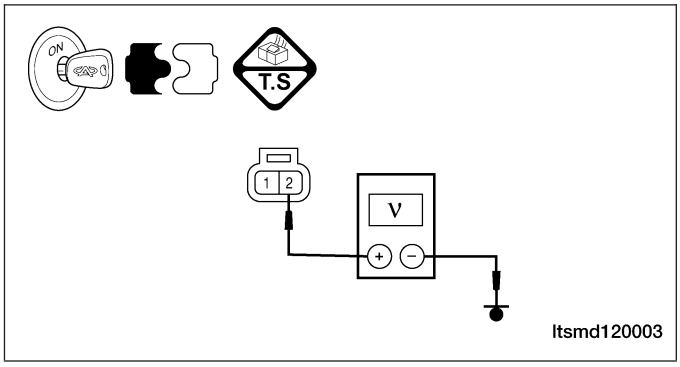

4. CHECK LEFT REAR WHEEL SPEED SENSOR RESISTANCE

- Check the wheel speed sensor resistance between the sensor terminals 1 and 2, component side.

Is the sensor resistance 700 - 1500 ohms?

Yes >> Go to the next step.

No >> Replace the Left Rear wheel speed sensor.

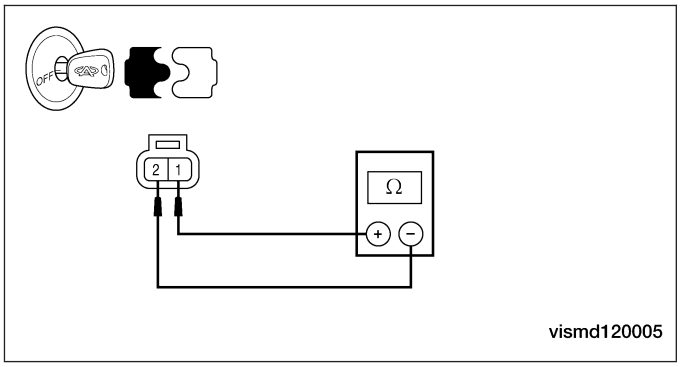

12

Downloaded from www.Manualslib.com manuals search engine

5. CHECK LEFT REAR WHEEL SPEED SENSOR GROUND CIRCUIT FOR AN OPEN

- Turn ignition switch off.
- Disconnect the ABS module electrical connector.
- For 1.6L/1.8L engine: Check the continuity between terminal 6 of the ABS module connector E-002, and terminal 2 of the Left Rear wheel speed sensor connector B-021, terminal side.
- For 2.0L/2.4L engine: Check the continuity between terminal 6 of the ABS module connector A-020, and terminal 2 of the Left Rear wheel speed sensor connector B-021, terminal side.
- Continuity should exist.

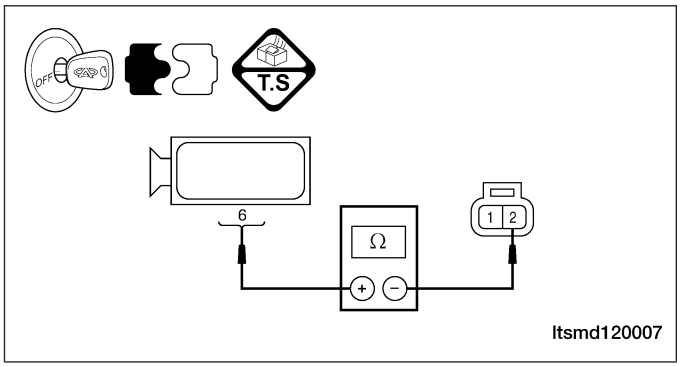

Is the check result normal?

Yes >> Go to the next step.

No >> Repair or replace the circuit for an open.

6. CHECK LEFT REAR WHEEL SPEED SENSOR GROUND CIRCUIT FOR A SHORT TO GROUND

- Check the continuity between terminal 2 of the Left Rear wheel speed sensor connector, terminal side and ground.
- Continuity should not exist.

Is the check result normal?

Yes >> Go to the next step.

No >> Repair or replace the circuit for a short to ground.

7. CHECK LEFT REAR WHEEL SPEED SENSOR GROUND CIRCUIT FOR A SHORT TO VOLTAGE

- Check the voltage between terminal 2 of the Left Rear wheel speed sensor connector, terminal side and ground.
- Voltage should not exist.

Is the check result normal?

Yes >> Go to the next step.

No >> Repair or replace the circuit for a short to battery.

8. CHECK DTC

- With the X-431 scan tool, read the ABS module DTCs.
- Refer to ″DTC Confirmation Procedure″.

Is DTC C1206 present?

Yes >> Replace the ABS module (See ABS Module Removal & Installation in Section 12 Brakes).

No >> The system is now operating properly.
Erase all codes and test drive the vehicle to verify the repair is complete.

Downloaded from www.Manualslib.com manuals search engine

C1209 - Right Rear Wheel Speed Sensor Circuit Open or Shorted

BRC - 1.6L - 1.8L - RRS - 01

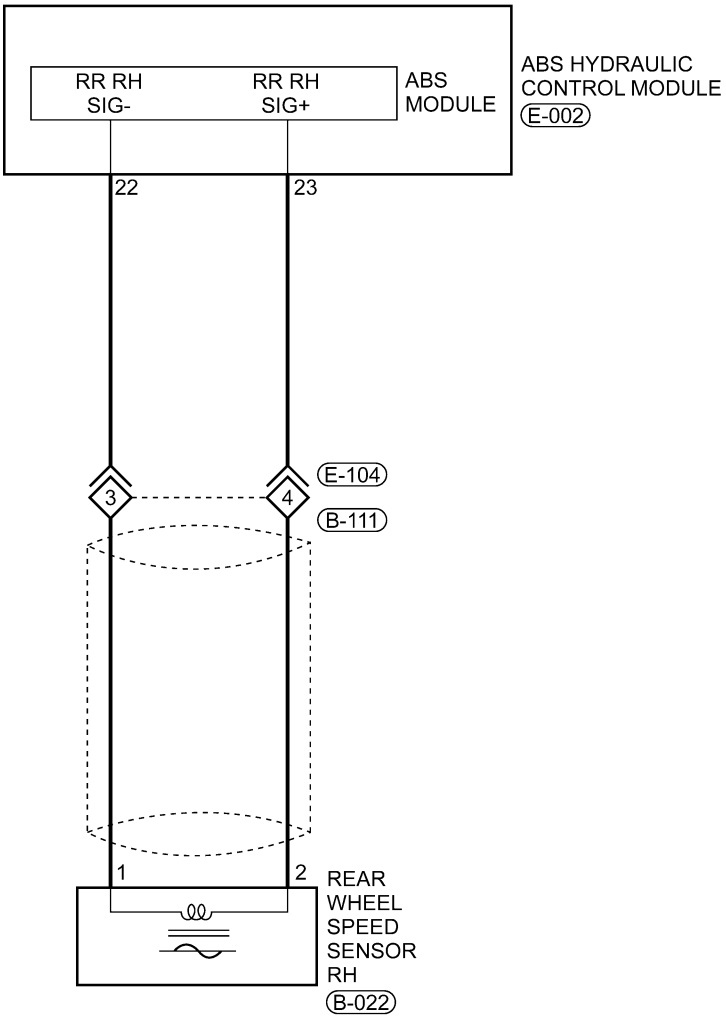

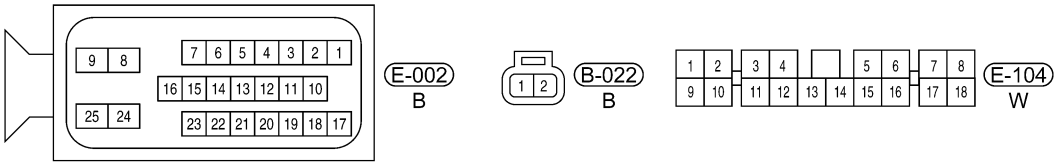

ltsmw120015t

Downloaded from www.Manualslib.com manuals search engine

BRC - 2.0L - 2.4L - RRS - 01

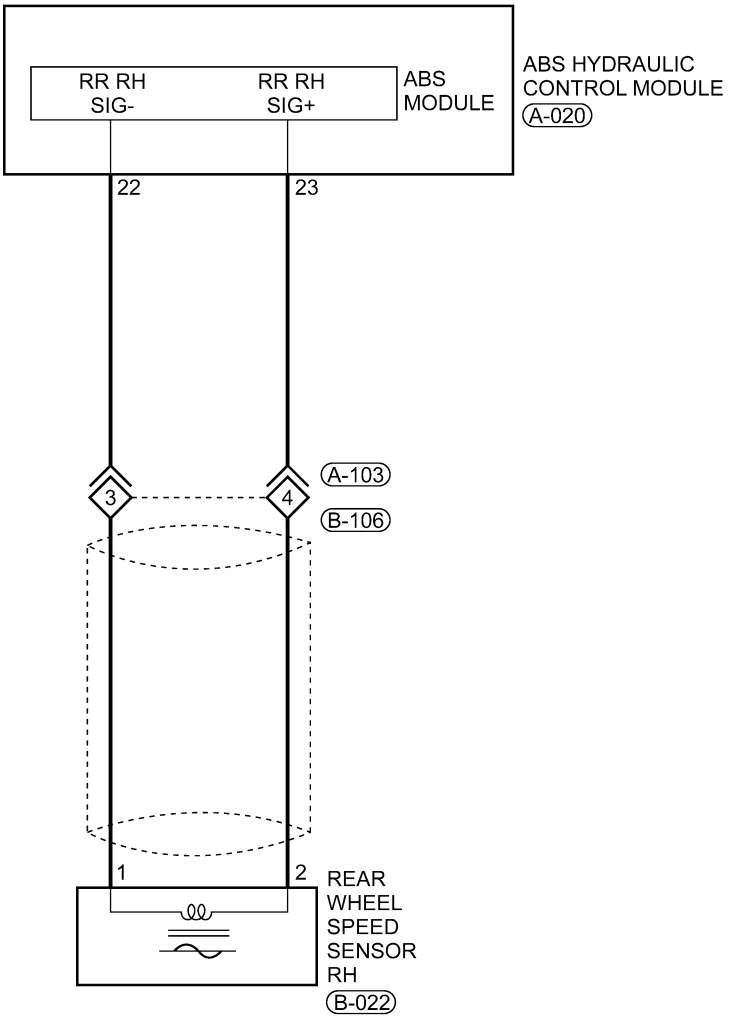

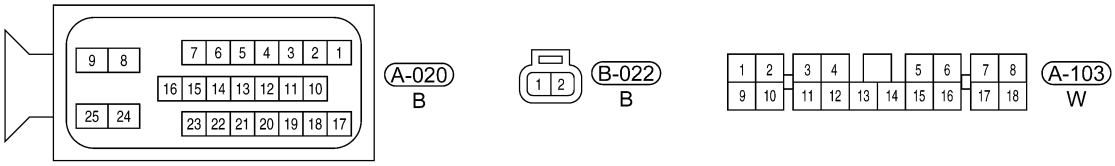

ltsmw120007t

Downloaded from www.Manualslib.com manuals search engine

On Board Diagnostic Logic

- Self-diagnosis detection logic.

DTC NO.	DTC DEFINITION	DTC DETECTION CONDITION	DTC SET CONDITION	POSSIBLE CAUSE
C1209	Right rear wheel speed sensor circuit open or shorted	• Ignition switch: ON • Vehicle: Running	ABS module detected that the Right Rear wheel speed sensor input signal to ABS module is open or shorted.	• Right Rear wheel speed sensor • Harness is open or shorted • ABS module

DTC Confirmation Procedure:

Before performing the following procedure, confirm that battery voltage is more than 12 V.

- Turn ignition switch off.
- Connect the X-431 scan tool to the Data Link Connector (DLC) - use the most current software available.
- Turn ignition switch on.
- With the scan tool, record and erase stored DTCs in the ABS module.
- Cycle the ignition switch from off to on.
- Start the engine and warm it to normal operating temperature.
- Turn ignition switch off and wait for a few seconds.
- Start the engine. With the scan tool connected to the DLC, drive the vehicle over 40 km/h (25 mph).

NOTE :

Vehicle must be driven above 40 km/h (25 mph) for fault setting conditions to be met.

- With the scan tool select: View ABS Data Stream and DTC.
- If the DTC is detected, the DTC condition is current. Go to Diagnostic Procedure - Step 1.
- If the DTC is not detected, the DTC condition is intermittent (See Diagnostic Help and Intermittent DTC Troubleshooting in Section 12 Brakes for more information).
- Erase all codes and test drive the vehicle to verify the repair is complete.

NOTE :

While performing electrical diagnosis & testing, always refer to the electrical schematics for specific circuit and component information.

Diagnostic Procedure

1. CHECK ABS MODULE DTC

- With the scan tool select: View ABS Data Stream.
- With an assistant driving the vehicle, check the following data stream list items while driving the vehicle over 40 km/h (25 mph).
  - Left Front Wheel Speed
  - Right Front Wheel Speed
  - Left Rear Wheel Speed
  - Right Rear Wheel Speed
- With the scan tool, read active DTCs in the ABS module.

Is DTC C1209 present and the Right Rear Wheel Speed signal abnormal?

Yes >> Go to the next step.

No >> The condition that caused this DTC to set is currently not present (See Diagnostic Help and Intermittent DTC Troubleshooting in Section 12 Brakes for more information).

Downloaded from www.Manualslib.com manuals search engine

2. CHECK RIGHT REAR WHEEL SPEED SENSOR ELECTRICAL CONNECTOR

- Turn ignition switch off.
- Disconnect the wheel speed sensor (1) electrical connector.
- Inspect the wheel speed sensor electrical connector.

Is the electrical connector OK?

Yes >> Go to the next step.

No >> Repair or replace the electrical connector as necessary.

3. CHECK RIGHT REAR WHEEL SPEED SENSOR REFERENCE SIGNAL CIRCUIT

- Turn ignition switch on.
- Measure the sensor reference voltage between terminal 2 of the wheel speed sensor connector, terminal side and ground.
- Voltage should exist (2.0 - 4.0 V).

Is the proper voltage present?

Yes >> Go to the next step.

No >> Repair or replace the circuit for an open, short to ground or short to battery in connector or harness.

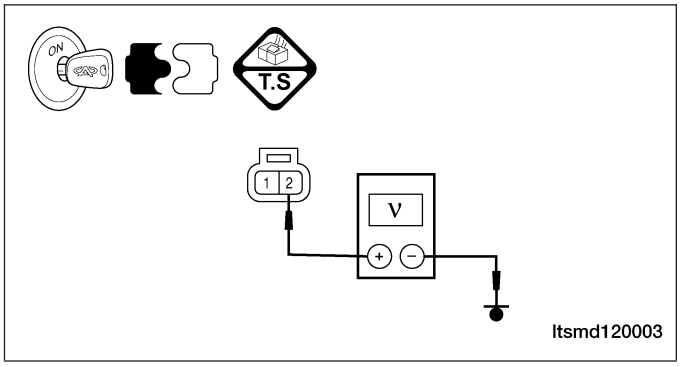

4. CHECK RIGHT REAR WHEEL SPEED SENSOR RESISTANCE

- Check the wheel speed sensor resistance between the sensor terminals 1 and 2, component side.

Is the sensor resistance 700 - 1500 ohms?

Yes >> Go to the next step.

No >> Replace the Right Rear wheel speed sensor.

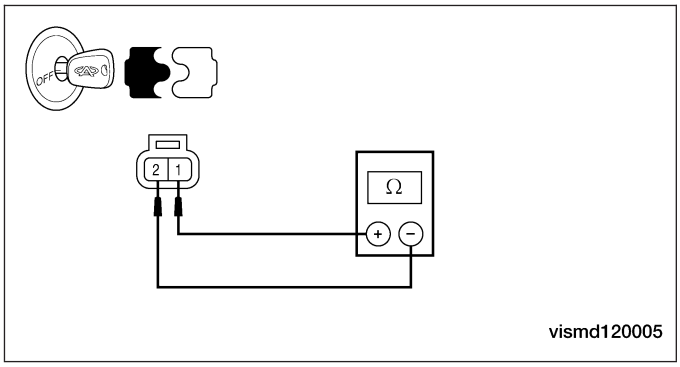

5. CHECK RIGHT REAR WHEEL SPEED SENSOR GROUND CIRCUIT FOR AN OPEN

- Turn ignition switch off.
- Disconnect the ABS module electrical connector.
- For 1.6L/1.8L engine: Check the continuity between terminal 22 of the ABS module connector E-002, and terminal 1 of the Right Rear wheel speed sensor connector B-022, terminal side.
- For 2.0L/2.4L engine: Check the continuity between terminal 22 of the ABS module connector A-020, and terminal 1 of the Right Rear wheel speed sensor connector B-022, terminal side.
- Continuity should exist.

Is the check result normal?

Yes >> Go to the next step.

No >> Repair or replace the circuit for an open.

Downloaded from www.Manualslib.com manuals search engine

6. CHECK RIGHT REAR WHEEL SPEED SENSOR GROUND CIRCUIT FOR A SHORT TO GROUND

- Check the continuity between terminal 1 of the Right Rear wheel speed sensor connector, terminal side and ground.
- Continuity should not exist.

Is the check result normal?

Yes >> Go to the next step.

No >> Repair or replace the circuit for a short to ground.

7. CHECK RIGHT REAR WHEEL SPEED SENSOR GROUND CIRCUIT FOR A SHORT TO VOLTAGE

- Check the voltage between terminal 1 of the Right Rear wheel speed sensor connector, terminal side and ground.
- Voltage should not exist.

Is the check result normal?

Yes >> Go to the next step.

No >> Repair or replace the circuit for a short to battery.

8. CHECK DTC

- With the X-431 scan tool, read the ABS module DTCs.
- Refer to ″DTC Confirmation Procedure″.

Is DTC C1209 present?

Yes >> Replace the ABS module (See ABS Module Removal & Installation in Section 12 Brakes).

No >> The system is now operating properly.
Erase all codes and test drive the vehicle to verify the repair is complete.

Downloaded from www.Manualslib.com manuals search engine

C1604 - ECU Defect, Internal Errors or Solenoid Fault

On Board Diagnostic Logic

- Self-diagnosis detection logic.

DTC NO.	DTC DEFINITION	DTC DETECTION CONDITION	POSSIBLE CAUSE
C1604	ECU defect, internal errors or solenoid fault	ECM detected an internal failure or solenoid failure.	ABS module or solenoid

DTC Confirmation Procedure:

Before performing the following procedure, confirm that battery voltage is more than 12 V.

- Turn ignition switch off.
- Connect the X-431 scan tool to the Data Link Connector (DLC) - use the most current software available.
- Turn ignition switch on.
- With the scan tool, record and erase stored DTCs in the ABS module.
- Cycle the ignition switch.
- Start engine and warm it to normal operating temperature.
- Turn ignition switch off and wait for a few seconds.
- Start the engine. With the scan tool connected to the DLC, drive the vehicle over 40 km/h (25 mph).
- With the scan tool select: View ABS Data Stream and DTC.
- If the DTC is detected, the DTC condition is current. Go to Diagnostic Procedure - Step 1.
- If the DTC is not detected, the DTC condition is intermittent (See Diagnostic Help and Intermittent DTC Troubleshooting in Section 12 Brakes for more information).
- Erase all codes and test drive the vehicle to verify the repair is complete.

NOTE :
While performing electrical diagnosis & testing, always refer to the electrical schematics for specific circuit and component information.

Downloaded from www.Manualslib.com manuals search engine

Diagnostic Procedure

1. CHECK DTC

- Perform DTC confirmation procedure.

Is DTC C1604 present?

Yes >> Go to the next step.

No >> The condition that caused this DTC to set is currently not present (See Diagnostic Help and Intermittent DTC Troubleshooting in Section 12 Brakes for more information).

2. CHECK ABS MODULE POWER SUPPLY AND GROUND CIRCUIT

- Check the ABS module voltage supply circuit and ground circuit for an open, high resistance or short circuit.

Is the check result normal?

Yes >> Go to the next step.

No >> Repair circuit for an open or short in harness and connectors.

3. CHECK DTC

- With the X-431 scan tool, read ABS module DTCs.
- Refer to ″DTC Confirmation Procedure″.

Is DTC C1604 still present?

Yes >> Replace the ABS module (See ABS Module Removal & Installation in Section 12 Brakes).

No >> The system is now operating properly.
Reassemble the vehicle and road test to verify the customers complaint is repaired.

Downloaded from www.Manualslib.com manuals search engine

ON-VEHICLE SERVICE

Antilock Brake System (ABS) Bleeding Procedure

ABS Bleeding Information

WARNING!

When bleeding the brake system, wear safety glasses. A clear bleed tube must be attached to the bleeder screws and submerged in a clear container filled partially. Direct the flow of brake fluid away from yourself and the painted surfaces of the vehicle. Brake fluid at high pressure may come out of the bleeder screws when opened.

CAUTION:
Before removing the master cylinder cap, wipe it clean to prevent dirt and other foreign matter from dropping into the master cylinder reservoir. Use brake fluid or an equivalent from a fresh, tightly sealed container. Brake fluid must conform to DOT 4 specifications.

NOTE :
During the brake bleeding procedure, be sure the brake fluid level remains close to the ″MAX″ level in the master cylinder fluid reservoir. Check the fluid level periodically during the bleeding procedure and add brake fluid as required.

NOTE :
Do not pump the brake pedal at any time while having a bleeder screw open during the bleeding process. This will only increase the amount of air in the system and make additional bleeding necessary. Do not allow the master cylinder reservoir to run out of brake fluid while bleeding the system. An empty reservoir will allow additional air into the brake system. Check the fluid level frequently and add fluid as needed. The following wheel circuit sequence for bleeding the brake hydraulic system should be used to ensure adequate removal of all trapped air from the hydraulic system.

ABS Bleeding Instructions

When bleeding the ABS system, the following bleeding sequence must be followed to ensure complete and adequate bleeding:
1. Make sure all hydraulic fluid lines are installed and properly torqued.
2. Connect the X-431 scan tool to the diagnostics connector.
3. Using the scan tool, check to make sure the ABS module does not have any fault codes stored. If it does, clear them.
4. Bleed the base brake system (See Manual Brake Bleeding in Section 12 Brake).

NOTE :
Pressure bleeding is recommended to bleed the base brake system to ensure all air is removed from the brake system.
5. Using the scan tool, access ″ABS bleeding″ function. Follow the instructions displayed. When finished, disconnect the scan tool and proceed.
6. Bleed the base brake system a second time. Check brake fluid level in the reservoir periodically to prevent emptying, causing air to enter the hydraulic system.
7. Fill the master cylinder fluid reservoir to the ″MAX″ level.
8. Test drive the vehicle to be sure the brakes are operating correctly and that the brake pedal does not feel spongy.

Downloaded from www.Manualslib.com manuals search engine

Antilock Brake System (ABS) Hydraulic Control Module

Removal & Installation

NOTE :
The following special tools are required to perform the repair procedure:
- Diagnostic Scan Tool X-431

NOTE :
The ABS hydraulic control module is comprised of the Hydraulic Control Unit (HCU) and the Electronic Control Unit (ECU). These are serviced as a complete unit and cannot be serviced separately.

1. Disconnect the negative battery cable.
2. Turn the ignition switch off.
3. Using a brake pedal holding tool, depress the brake pedal past its first 25 mm of travel and hold it in this position. This will isolate the master cylinder from the brake hydraulic system and will not allow the brake fluid to drain out of the master cylinder reservoir while the lines are disconnected.
4. Remove the brake tubes (1) at the hydraulic control unit.
   (Tighten: Brake tube nuts to 10 N·m)
5. Disconnect the ABS hydraulic control module electrical connector.
6. Remove the mounting bolts attaching the HCU mounting bracket to vehicle.
   (Tighten: ABS mounting bracket bolts to 20 N·m)

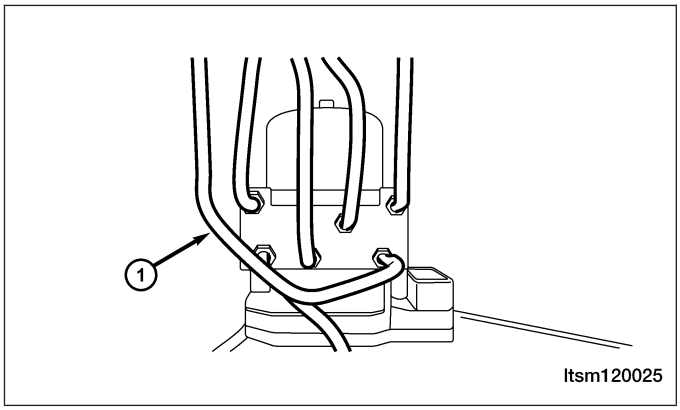

7. Position the brake tubes as necessary without bending them.
8. Remove the ABS HCU from vehicle.
9. Remove the ABS mounting bolts and mounting bracket as necessary.
   (Tighten: ABS mounting bolts to 10 N·m)
10. Installation is in the reverse order of removal.

Installation Notes:
- After installation, connect the X-431 scan tool to initialize the ABS hydraulic control module and bleed the brake system (See Antilock Brake System (ABS) Bleeding Procedure in Section 12 Brakes).

Front Wheel Speed Sensor

Removal & Installation

1. Disconnect the negative battery cable.
2. Raise and support the vehicle.
3. Remove the wheel mounting nuts and the tire and wheel assembly.
   (Tighten: Wheel mounting nuts to 110 N·m)
4. Disconnect the wheel speed sensor electrical connector.

Downloaded from www.Manualslib.com manuals search engine

5. Remove the wheel speed sensor mounting bolt (1). (Tighten: Wheel speed sensor mounting bolt to 10 N·m)

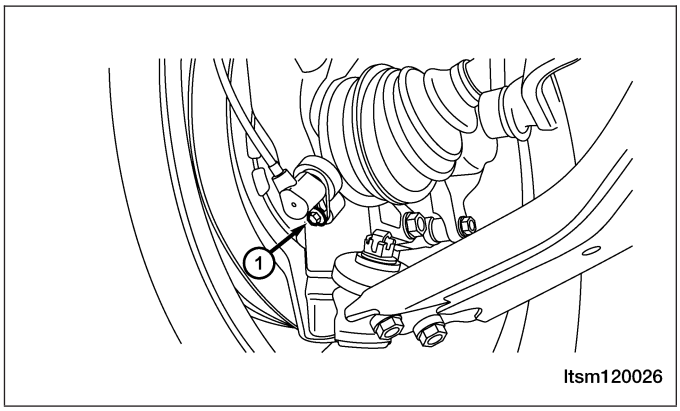

6. Remove the front wheel speed sensor.

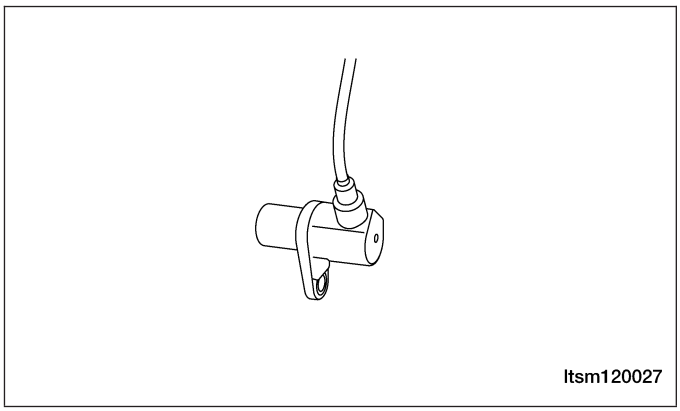

Rear Wheel Speed Sensor

Removal & Installation

1. Disconnect the negative battery cable.
2. Raise and support the vehicle.
3. Remove the wheel mounting nuts and the tire and wheel assembly. (Tighten: Wheel mounting nuts to 110 N·m)
4. Disconnect the rear wheel speed sensor electrical connector (1).

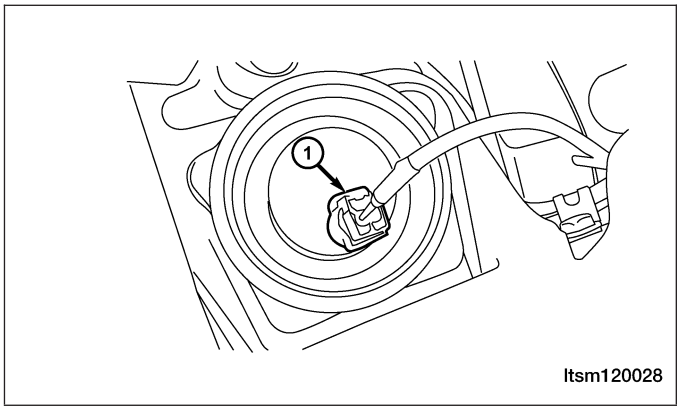

5. Remove the rear hub and bearing assembly (See Rear Hub and Bearing Removal & Installation in Section 09 Driveline & Axle).
6. Remove the rear wheel speed sensor with the rear hub and bearing.

   NOTE: The rear wheel speed sensor is integrated into the rear hub and bearing assembly and a one piece sealed unit.

Downloaded from www.Manualslib.com manuals search engine

PARKING BRAKE

GENERAL INFORMATION 12-80
Description 12-80
Operation 12-80
Specifications 12-80
Special Tools 12-80
Electrical Schematics 12-81

DIAGNOSIS & TESTING 12-82
Parking Brake Warning Light 12-82
Parking Brake Operation 12-82
Parking Brake Adjustment 12-82

ON-VEHICLE SERVICE 12-84
Parking Brake Lever 12-84
Removal & Installation 12-84
Parking Brake Cable 12-85
Removal & Installation 12-85
Parking Brake Shoes 12-86
Removal & Installation 12-86

Downloaded from www.Manualslib.com manuals search engine

GENERAL INFORMATION

Description

The parking brakes consist of the following components:
- Hand-operated parking brake lever
- Parking brake cables (one each side)
- Parking brake controls

Operation

All vehicles are equipped with a center-mounted, hand-operated parking brake lever mounted between the front seats. A tensioner is built into the equalizer mounted on the end of the lever's output cable. There is an individual parking brake cable for each rear wheel that joins a parking brake cable equalizer, attached to the parking brake lever, to the rear parking brakes. The parking brake cables are made of flexible steel cable.

Specifications

Torque Specifications

DESCRIPTION	TORQUE (N·m)
Parking Brake Cable Routing Clamp Bolt	12
Parking Brake Cable Bracket Bolts	12
Parking Brake Lever Nuts	30
Wheel Mounting Nuts	110

Special Tools

Brake Measuring Gauge J21177-A	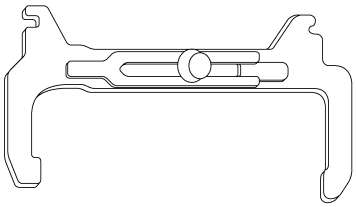 besm120025

Downloaded from www.Manualslib.com manuals search engine

Electrical Schematics

Parking Brake System (Page 1 of 1)

PARKING BRAKE SYSTEM

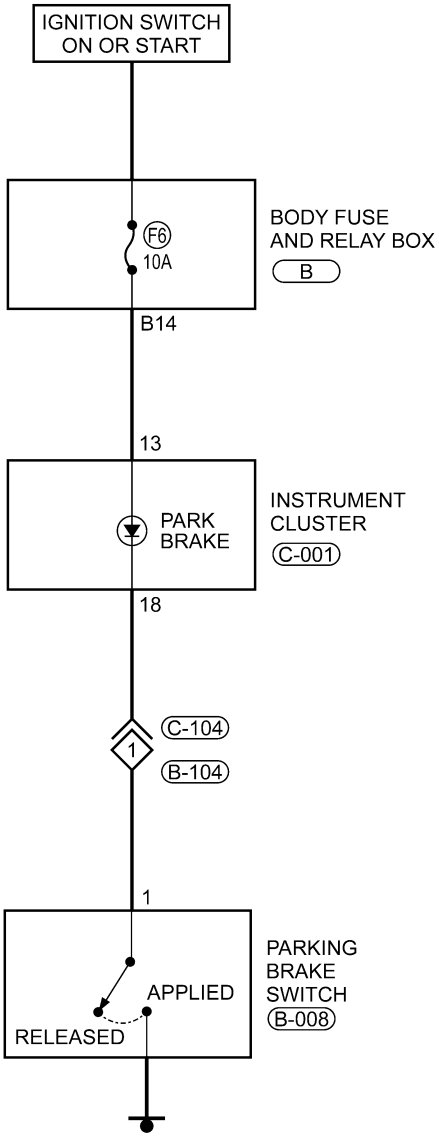

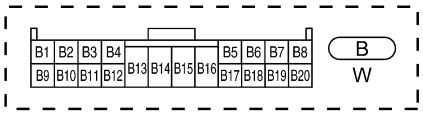

BODY FUSE
AND
RELAY BOX

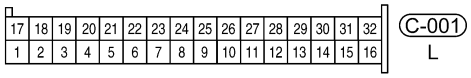

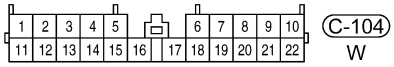

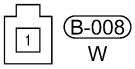

ltsmw120018t

Downloaded from www.Manualslib.com manuals search engine

DIAGNOSIS & TESTING

Parking Brake Warning Light

The parking brake switch is incorporated in the circuit for the red warning lamp in the dash. The switch will cause the lamp to illuminate only when the parking brakes are applied. If the lamp remains on after parking brake release, the switch or circuit is faulty.

Parking Brake Operation

The leading cause of improper parking brake operation, is excessive clearance between the parking brake shoes and the shoe braking surface. Excessive clearance is a result of lining and/or drum wear, drum surface machined oversize.

In most cases, the actual cause of an improperly functioning parking brake (too loose/too tight/won't hold), can be traced to a parking brake component.

Inspect the following when diagnosing a parking brake problem:
- Brake shoe wear
- Drum surface (in rear rotor) machined oversize
- Front cable not secured to lever
- Rear cable not attached to actuator
- Rear cable seized
- Parking brake lever not seated
- Parking brake lever bind

Parking Brake Adjustment

Adjust the parking brake only if the parking brake lever can be pulled up more than 3 notches without having an adequate solid braking effect.

NOTE :
Excessive parking brake lever travel (sometimes described as a loose lever or too loose condition), could be the result of worn brake shoes, improper brake shoe adjustment, or improperly assembled brake parts. A too loose condition can also be caused by inoperative or improperly assembled parking brake components. Always confirm that the parking brake components are assembled properly. Perform the following procedure to adjust the parking brake:

1. Verify the parking brake lever is in the released (down) position.
2. Raise and support the vehicle.
3. Remove the wheel mounting nuts and the rear tire and wheel assemblies.
4. Utilizing the access hole in the rotors, adjust the parking brake shoes.
5. Reach inside the vehicle and fully apply and release the parking brake.
6. With the parking brake lever in the fully applied (up) position, attempt to rotate the rear rotors by hand (to ensure that the parking brake shoes are working properly).
7. With the parking brake lever in the released (down) position, attempt to rotate the rear rotors by hand (to ensure that the parking brake shoes are not dragging).
8. Install both rear tire and wheel assemblies and the wheel mounting nuts.
   (Tighten: Wheel mounting nuts to 110 N·m)

Downloaded from www.Manualslib.com manuals search engine

9. Tighten or loosen the parking brake adjustment nut (1) to adjust the parking brake.

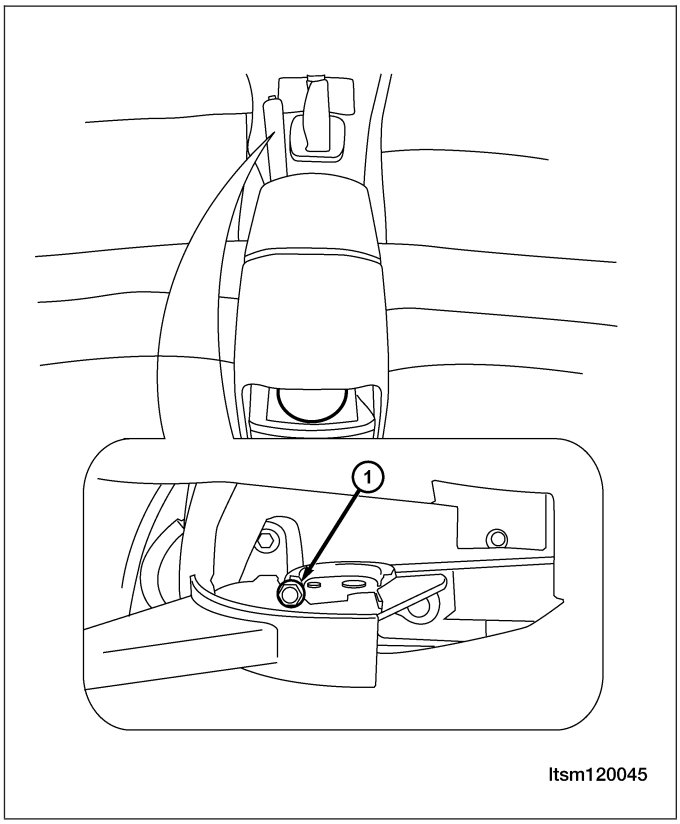

10. Lower the vehicle.

Downloaded from www.Manualslib.com manuals search engine

ON-VEHICLE SERVICE

Parking Brake Lever

Removal & Installation

1. Block the tire and wheel assemblies so the vehicle does not move once the vehicle parking brake lever is released.
2. Remove the center console (See Center Console Removal & Installation in Section 15 Body & Accessories).
3. Loosen the adjusting nut (2) on the lever's output cable, taking tension off parking brake cables.
4. Back the nut off until it is flush with the end of the output cable.
5. Remove the bolts (1) attaching the parking brake lever to the vehicle.
   (Tighten: Parking brake lever bolts to 30 N·m)
6. Remove the parking brake assembly.
7. Installation is in the reverse order of removal.

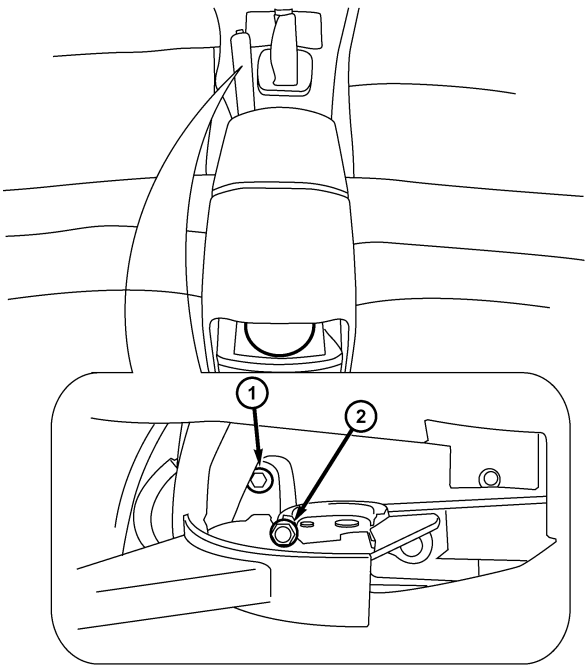

ltsm120031

Installation Notes:

- After installation, adjust the parking brake cable as necessary (See Parking Brake Adjustment in Section 12 Brakes).

Downloaded from www.Manualslib.com manuals search engine

Parking Brake Cable

Removal & Installation

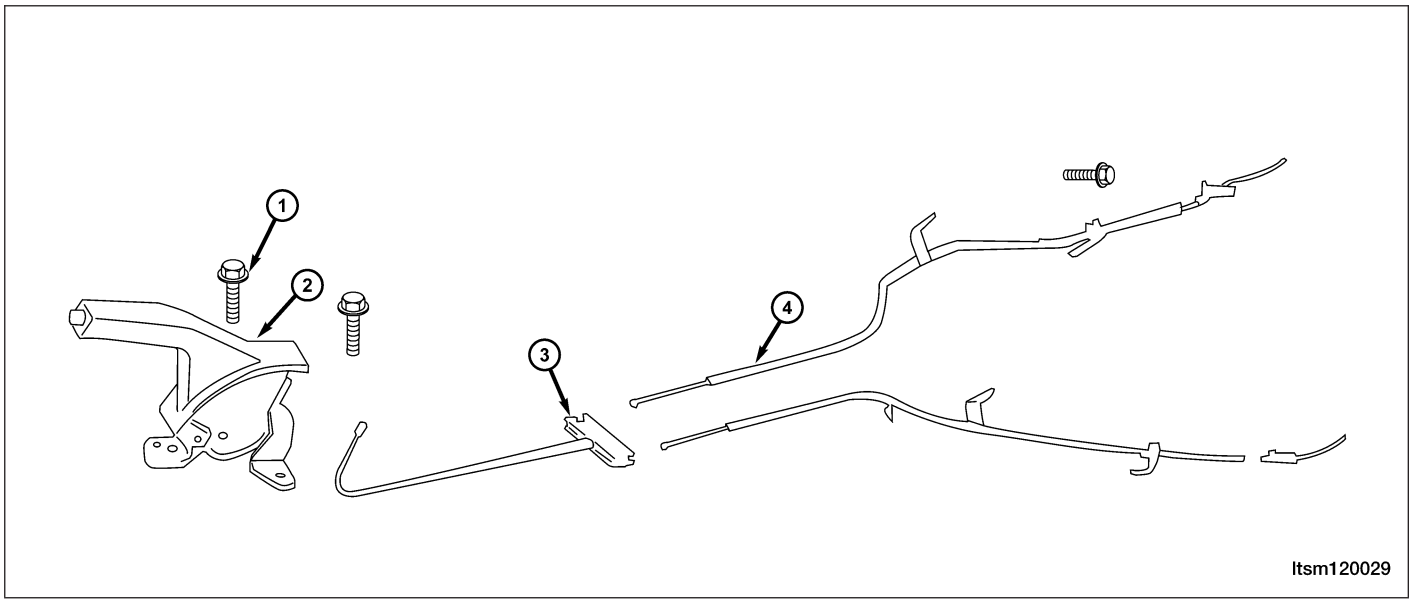

1. Remove the parking brake lever (2).
2. Remove the adjusting bolt (1) from the parking brake lever.
3. Loosen the right and left parking brake cable bracket bolts (3).
4. Remove the parking brake cable (4).
5. Remove the right and left parking brake cable bolts.
6. Remove the parking brake cable (1) from the brake actuator.
7. Installation is in the reverse order of removal.

NOTE :
The parking brake should be adjusted after replacing brake shoes or hand brake cable.
- Loosen the parking brake handle.
- Apply the brake pedal once.
- Pull the parking brake handle up four clicks.
- After completing the above procedure, loosen the parking brake and inspect the rear wheels to check if they can be turned freely. If the wheels are still tight, repeat the adjustment procedure.

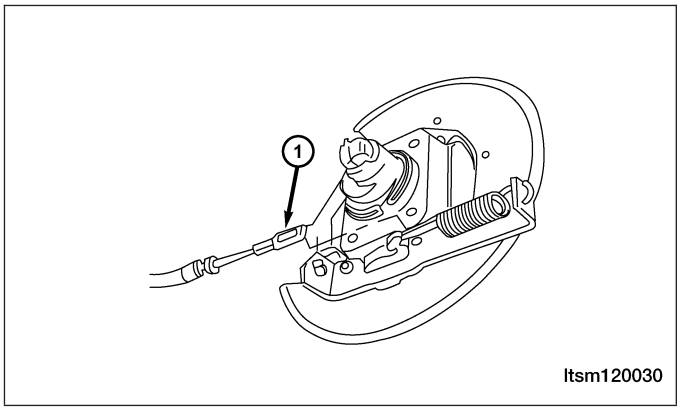

Downloaded from www.Manualslib.com manuals search engine

Parking Brake Shoes

Removal & Installation

1. Raise and support the vehicle.
2. Remove the rear wheel mounting nuts and both rear tire and wheel assemblies. (Tighten: Wheel mounting nuts to 110 N·m)
3. Access and remove rear brake rotor (See Rear Brake Rotor Removal & Installation in Section 12 Brakes).
4. Turn the brake shoe adjuster wheel until the adjuster is at shortest length.

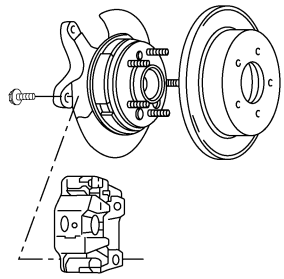

ltsm120037

5. Remove the brake shoe hold-down springs (3) and pins (6). Rotate the pins 90° to disengage.
6. Remove the parking brake cable from the arm on the rear parking brake shoe.
7. Remove the brake shoes (2, 7), adjuster (4) and lower return spring (5) as an assembly from the support plate.
8. Remove the lower return spring (5) and adjuster (4) from the shoes (2, 7).
9. Remove the parking brake shoes.

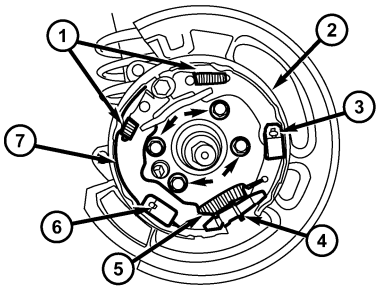

besm120021

10. Installation is in the reverse order of removal.

Downloaded from www.Manualslib.com manuals search engine

Installation Notes:

- Perform the following to measure and adjust parking brake shoes:
  1. Using a brake measuring gauge or equivalent, measure the inside diameter of parking brake drum (1).
  2. Place the brake measuring gauge over the parking brake shoes at their widest point.

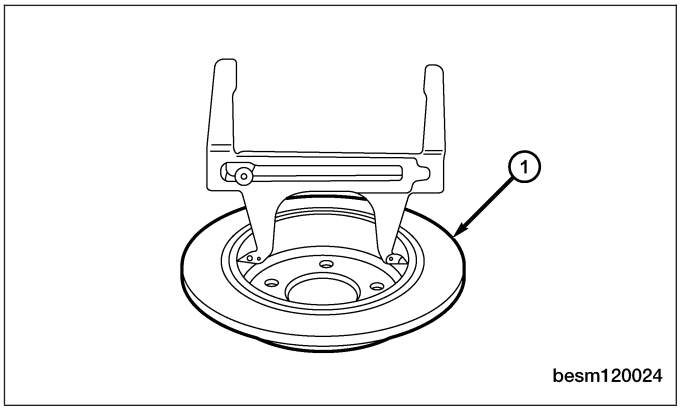

  3. Using the adjuster wheel, adjust the parking brake shoes until the linings on both parking brake shoes just touch the jaws on the brake measuring gauge.
- After installation, adjust the parking brake cable as necessary (See Parking Brake Adjustment in Section 12 Brakes).

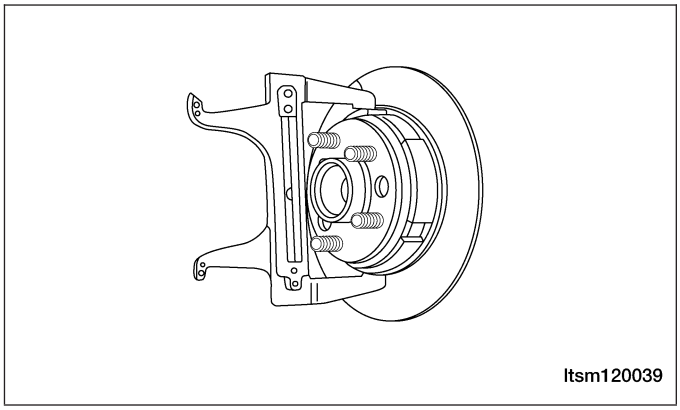

BRAKE SHOES	NEW THICKNESS	MINIMUM THICKNESS
Rear Shoes	2.5 mm	1.5 mm

Downloaded from www.Manualslib.com manuals search engine

HEATING & AIR CONDITIONING
13

CONTENTS

	page
Manual Temperature Control	**13-1**
System Controls	**13-18**
Air Distribution	**13-25**
System Plumbing	**13-32**

MANUAL TEMPERATURE CONTROL

GENERAL INFORMATION 13-2
- Description 13-2
- Operation 13-4
- Specifications 13-4
- Special Tools 13-5
- Electrical Schematics 13-6

DIAGNOSIS & TESTING 13-12
- A/C System Performance 13-12
- Heater Performance 13-14

ON-VEHICLE SERVICE 13-15
- **Manual Temperature Control Module** 13-15
  - Removal & Installation 13-15
- **Blower Motor Resistor** 13-16
  - Removal & Installation 13-16

13

Downloaded from www.Manualslib.com manuals search engine

GENERAL INFORMATION

Description

This vehicle is equipped with a common HVAC housing assembly. The system combines air conditioning, heating, and ventilating capabilities in a single unit housing mounted under the instrument panel. The driver can choose the following functions from HVAC control panel:

- The inside temperature
- The speed of the blower
- Five different modes of operation
- A/C compressor clutch operation
- Recirculation door position

NOTE :

To maintain the performance level of the heating, ventilation and air conditioning (HVAC) system, the engine cooling system must be properly maintained. Any obstructions in front of the radiator or A/C condenser will reduce the performance of the A/C and engine cooling systems.

Downloaded from www.Manualslib.com manuals search engine

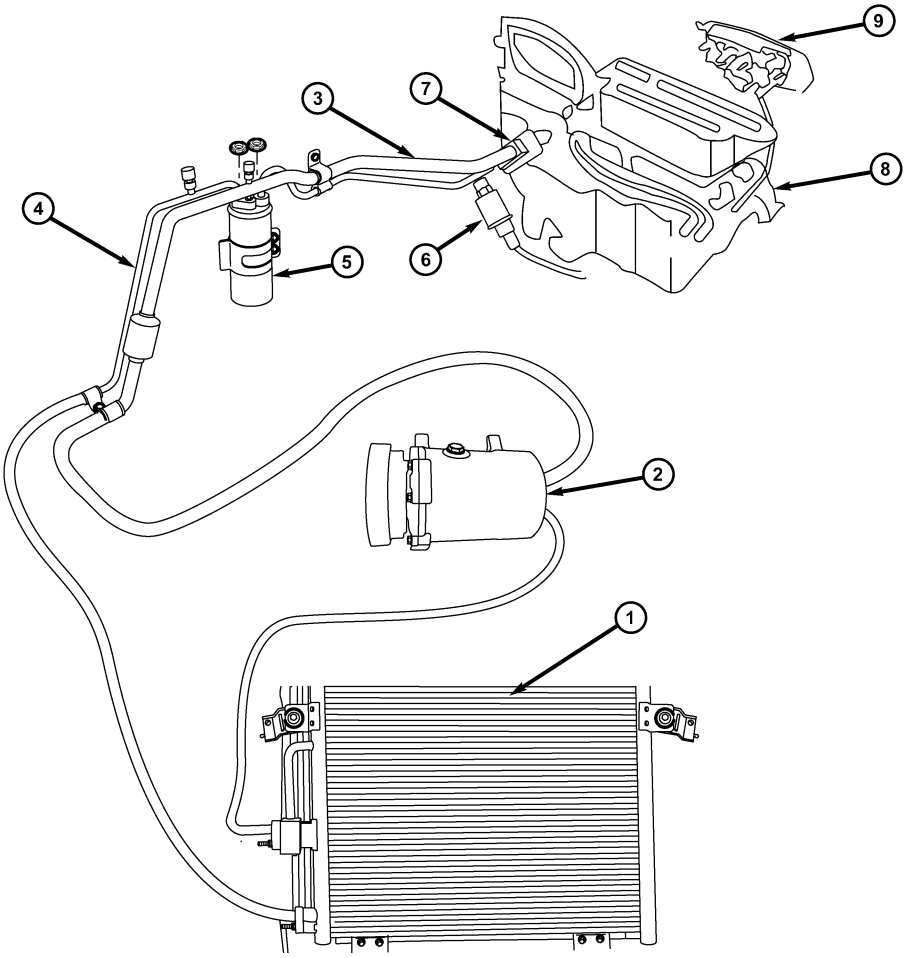

ltsm130021

1 - Condenser	6 - Refrigerant Pressure Sensor
2 - Compressor	7 - Expansion Valve
3 - Suction Line	8 - HVAC Housing
4 - Liquid Line	9 - HVAC Control Panel
5 - Accumulator	

Downloaded from www.Manualslib.com manuals search engine

Operation

Outside fresh air enters the vehicle through the cowl top opening at the base of the windshield, and passes through a plenum chamber to the HVAC housing. Air flow can be adjusted by the blower motor speed switch on the A/C heater control panel. The fresh air then travels through the evaporator and the heater core then out into the vehicle through the side and floor vents. It is important to keep the air intake openings clear of debris such as leaf particles which are small enough to pass through the cowl plenum screen and can accumulate within the HVAC housing. The A/C compressor can be engaged by pressing the A/C (snowflake) button on the A/C-Heater control panel. It will automatically engage when the mode control is set in any Mix to Defrost position. This will remove heat and humidity from the air before it is directed through or around the heater core. The mode control on the A/C-Heater control panel is used to direct the conditioned air to the selected system outlets.

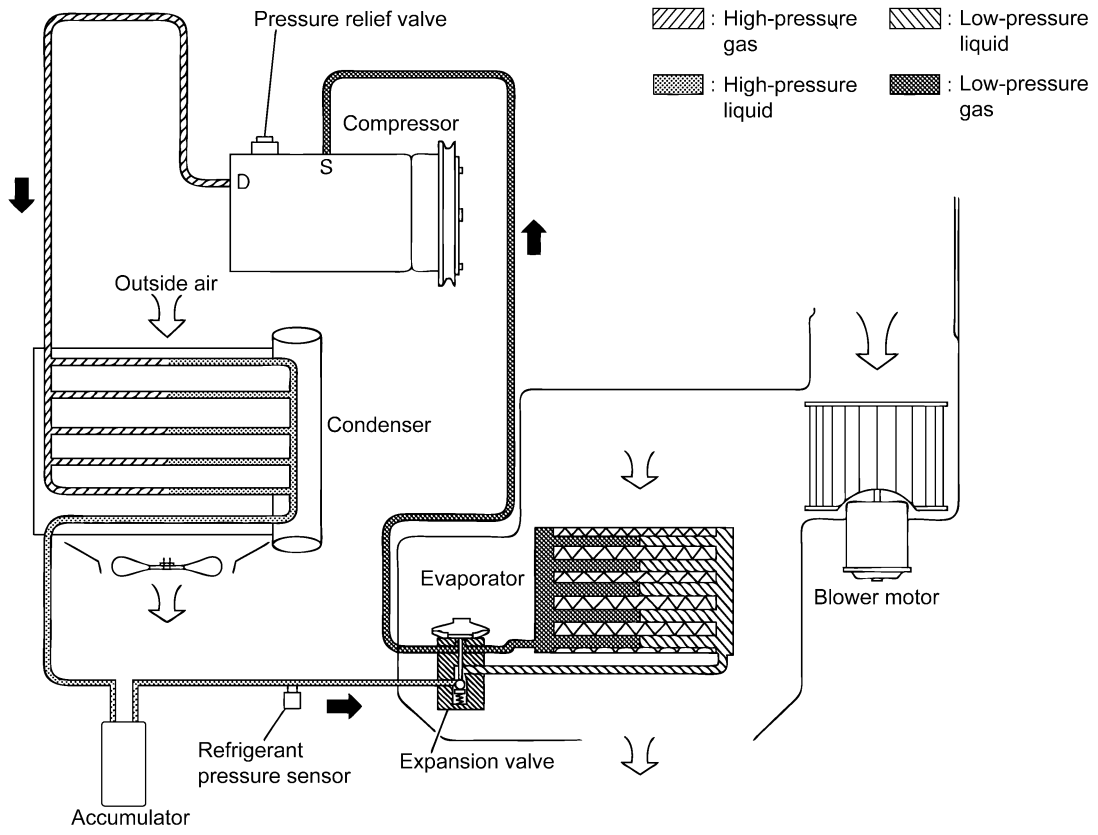

ltsm130020t

Specifications

Torque Specifications

DESCRIPTION	TORQUE (N·m)
All General Service Screw	2
Condenser Bolts	6
Evaporator Bolts	4

Downloaded from www.Manualslib.com manuals search engine

DESCRIPTION	TORQUE (N·m)
Expansion Valve Bolts	10
Pipeline Stent	4
Refrigerant Lines To A/C Accumulator	6
Refrigerant Lines To A/C Compressor Bolt	30
Refrigerant Lines	10
Refrigerant Lines To A/C Evaporator Bolt	25

A/C Pressure Specifications

AMBIENT TEMPERATURE	A/C HIGH SIDE PRESSURE	A/C LOW SIDE PRESSURE
15.5°C	8.4 - 11.9 kgf/cm^2 120 - 170 psi	1.9 - 2.1 kgf/cm^2 28 - 31 psi
21.1°C	10.5 - 17.5 kgf/cm^2 150 - 250 psi	1.9 - 2.1 kgf/cm^2 28 - 31 psi
26.6°C	12.6 - 19.3 kgf/cm^2 180 - 275 psi	1.9 - 2.1 kgf/cm^2 28 - 31 psi
32.2°C	14.0 - 21.8 kgf/cm^2 200 - 310 psi	1.9 - 2.1 kgf/cm^2 28 - 31 psi
37.7°C	16.1 - 23 kgf/cm^2 230 - 330 psi	1.9 - 2.4 kgf/cm^2 28 - 35 psi
43.3°C	18.9 - 25.3 kgf/cm^2 270 - 360 psi	1.9 - 2.6 kgf/cm^2 28 - 38 psi

AMBIENT TEMPERATURE	VEHICLE SPEED	A/C HIGH SIDE PRESSURE	A/C LOW SIDE PRESSURE
35°C	Idle Speed	1.4 - 1.8 MPa	0.26 - 0.33 MPa
30°C	Idle Speed	1.3 - 1.8 MPa	0.26 - 0.33 MPa

A/C Refrigerant Charge Specifications

DESCRIPTION	CAPACITY (g)
R-134a Refrigerant	700

Special Tools

Digital Multimeter Fluke 15B & 17B	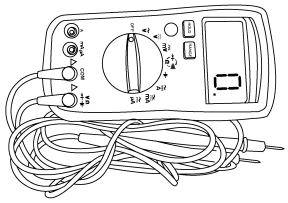 besm030002

Downloaded from www.Manualslib.com manuals search engine

Electrical Schematics

Air Conditioner Control - 1.6L & 1.8L (Page 1 of 3)

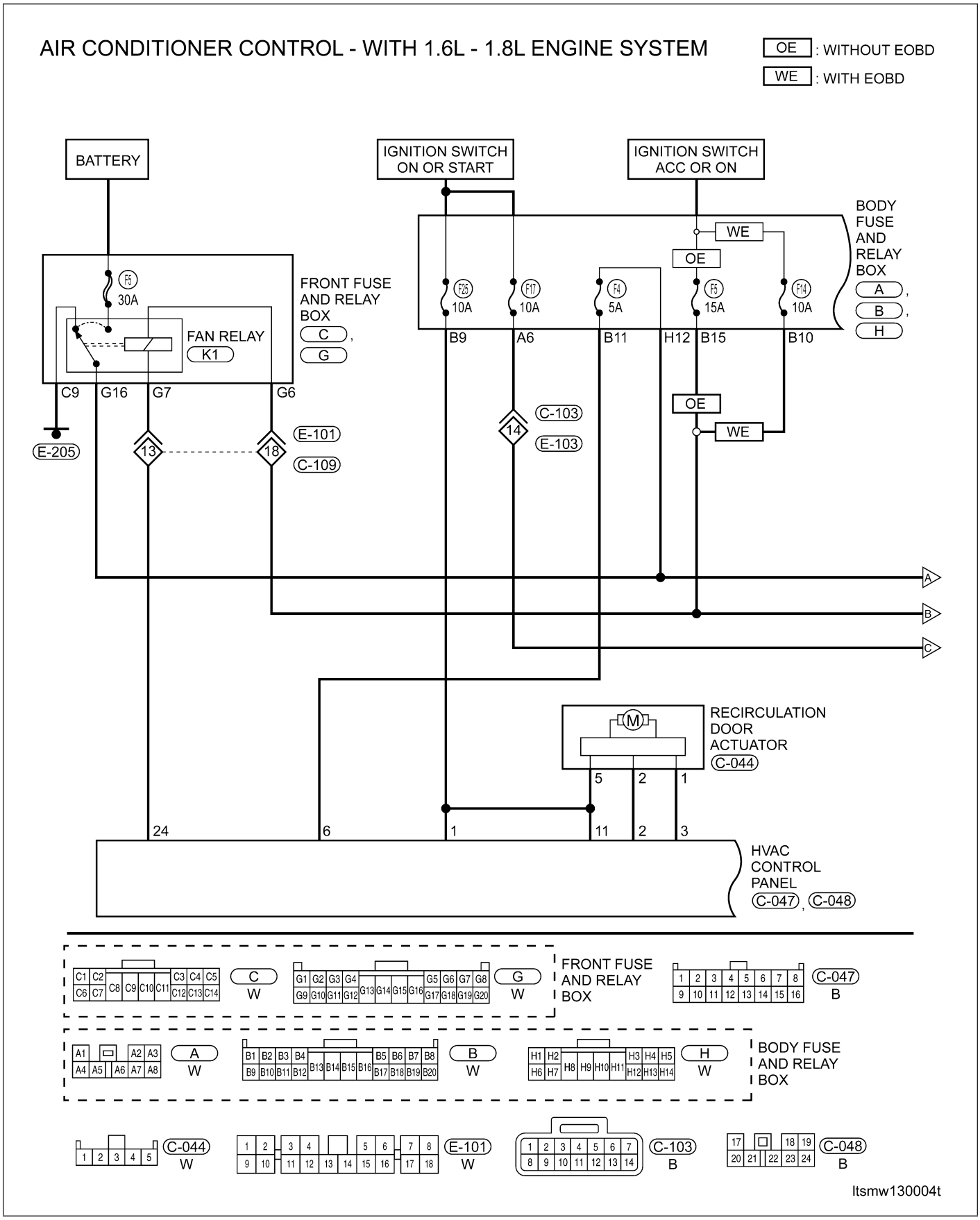

Downloaded from www.Manualslib.com manuals search engine

Air Conditioner Control - 1.6L & 1.8L (Page 2 of 3)

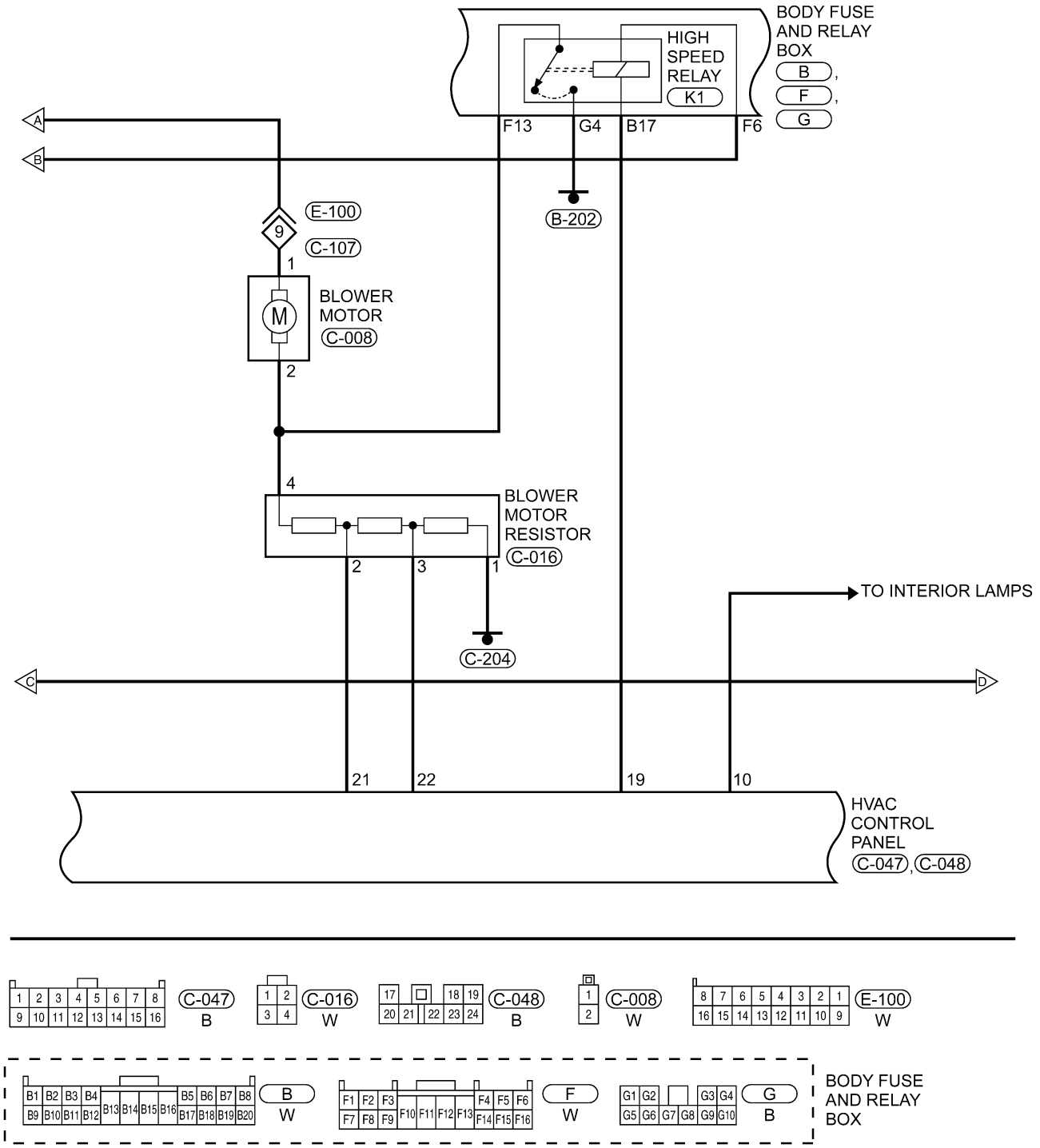

ltsmw130005t

Downloaded from www.Manualslib.com manuals search engine

Air Conditioner Control - 1.6L & 1.8L (Page 3 of 3)

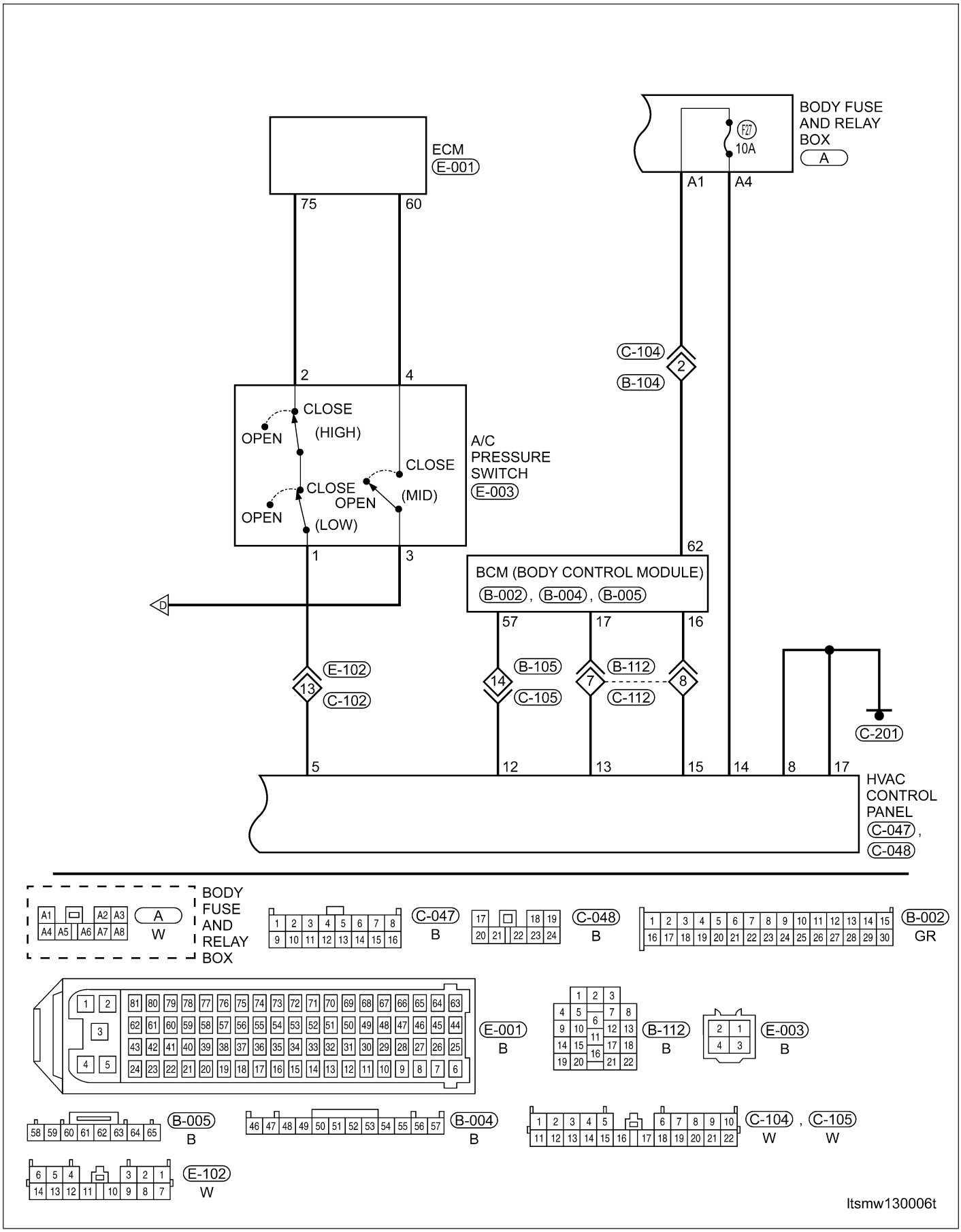

Downloaded from www.Manualslib.com manuals search engine

Air Conditioner Control - 2.0L & 2.4L (Page 1 of 3)

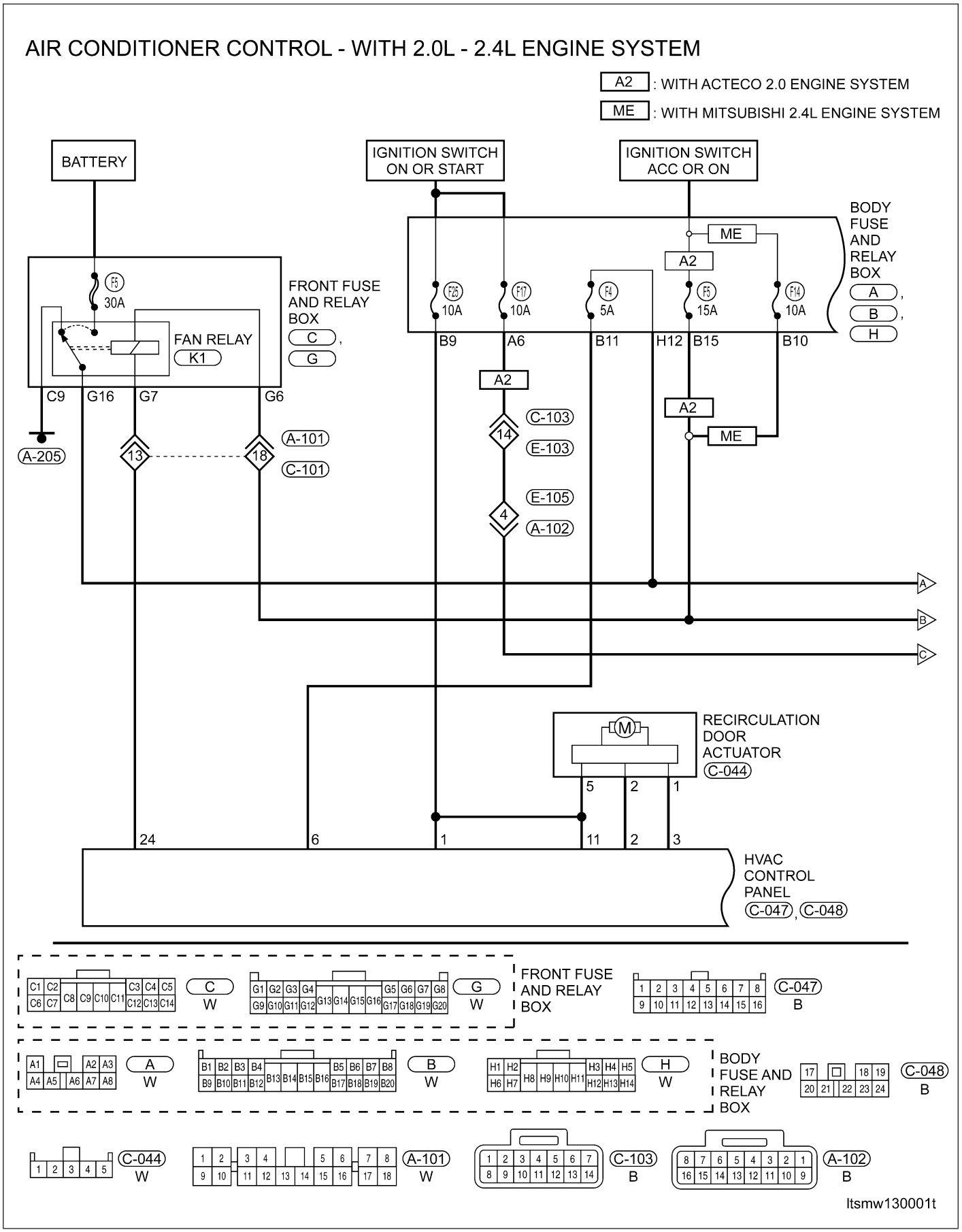

Downloaded from www.Manualslib.com manuals search engine

Air Conditioner Control - 2.0L & 2.4L (Page 2 of 3)

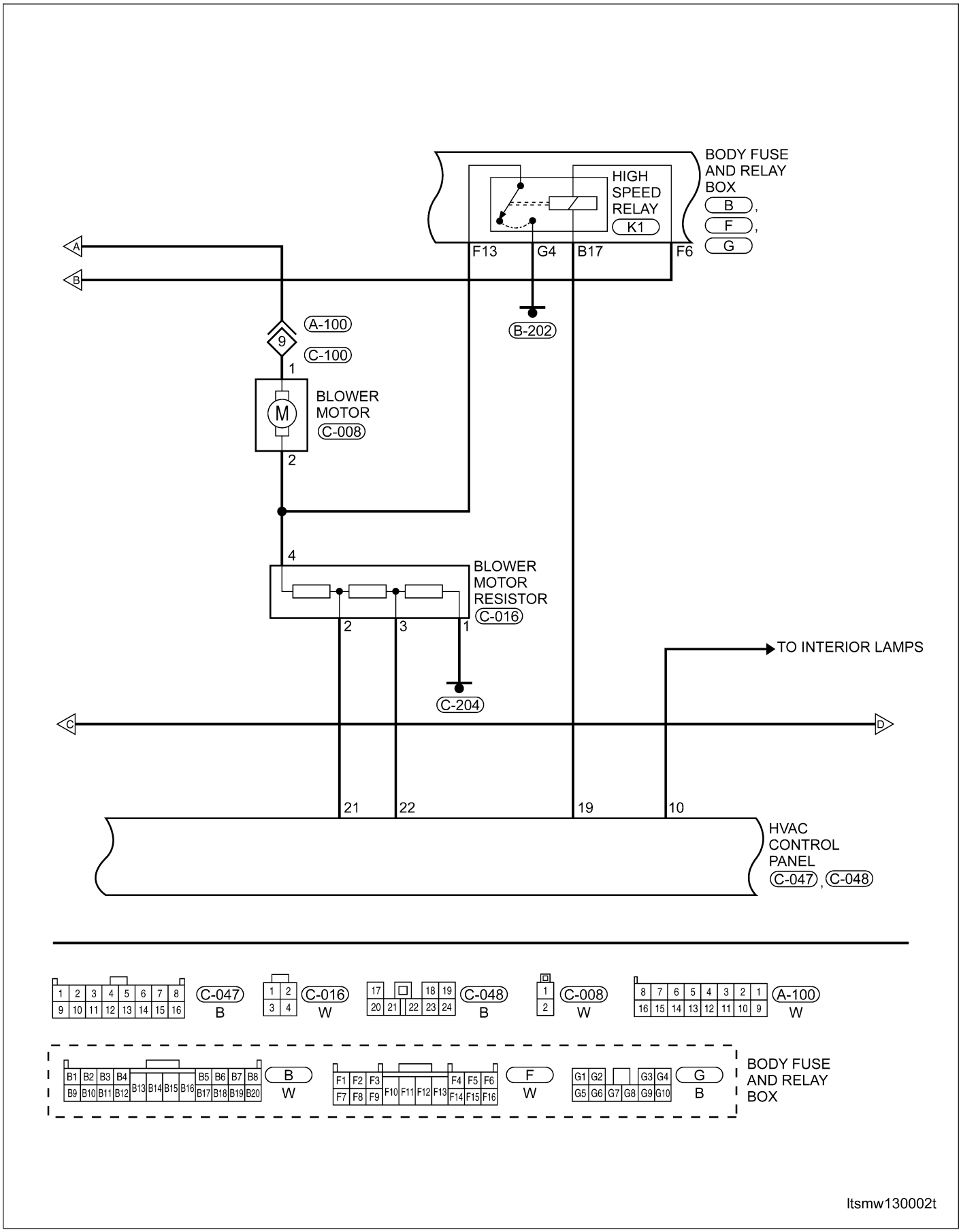

Downloaded from www.Manualslib.com manuals search engine

Air Conditioner Control - 2.0L & 2.4L (Page 3 of 3)

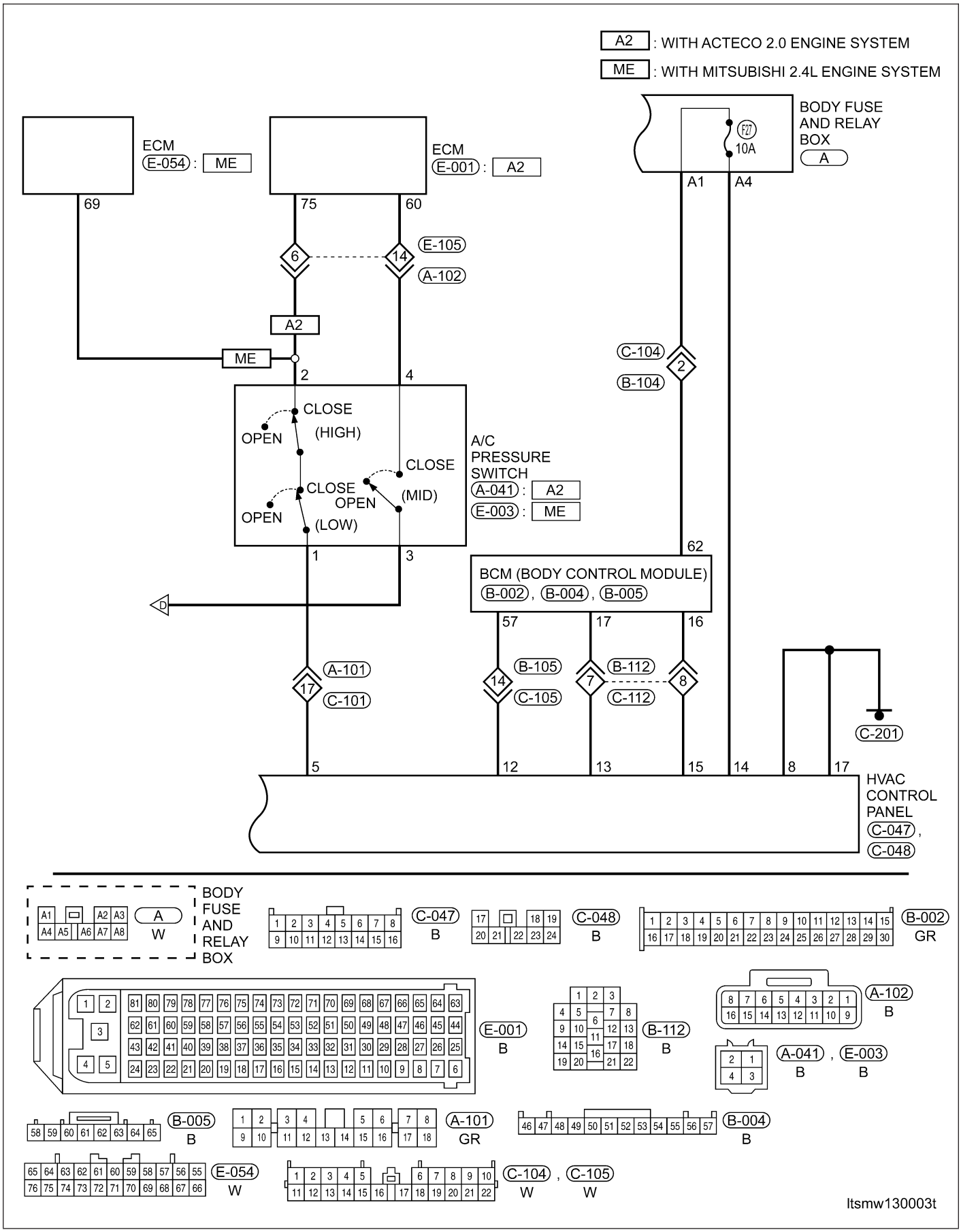

Downloaded from www.Manualslib.com manuals search engine

DIAGNOSIS & TESTING

A/C System Performance

The ambient air temperature must be a minimum of 21°C for this test.

1. Connect a manifold gauge set.
2. Set the A/C Heater mode control switch knob in the Panel position, the temperature control knob in the full cool position, the A/C button in the On position, and the blower motor switch knob in the highest speed position.
3. Start the engine and hold the idle at 2,000 RPM with the compressor clutch engaged.
4. The engine should be at operating temperature. The doors and windows must be open.
5. Insert a thermometer in the driver side center A/C (panel) outlet. Operate the engine for five minutes.
6. The compressor clutch may cycle, depending upon the ambient temperature and humidity.
7. With the compressor clutch engaged, record the discharge air temperature and the compressor discharge pressure.
8. Compare the discharge air temperature to the performance temperature and pressure chart.

NOTE :
The discharge air temperatures will be lower if the humidity is less than the percentages shown.

TEMPERATURE AND PRESSURE					
Ambient Air Temperature and Humidity	21°C (80% humidity)	27°C (80% humidity)	32°C (80% humidity)	38°C (50% humidity)	43°C (20% humidity)
Air Temperature at Center Panel Outlet	10 - 13°C	14 - 17°C	15 - 18°C	17 - 20°C	14 - 17°C
Evaporator Inlet Pressure at Charge Port	241 - 276 kPa	262 - 290 kPa	269 - 296 kPa	275 - 303 kPa	262 - 290 kPa
Compressor Discharge Pressure	1241 - 1792 kPa	1380 - 1930 kPa	1380 - 1930 kPa	1655 - 2206 kPa	1567 - 2068 kPa

A/C System Troubleshooting Chart

CONDITION	POSSIBLE CAUSES	CORRECTION
Rapid Compressor Clutch Cycling (ten or more cycles per minute)	· Low refrigerant system charge.	· Test the A/C system for leaks. Repair, evacuate and charge the refrigerant system, if required.
Equal Pressures, But The Compressor Clutch Does Not Engage	· No refrigerant in the refrigerant system. · Faulty A/C compressor clutch coil. · Faulty A/C pressure switch. · Faulty A/C heater control module. · Faulty A/C fuse. · Faulty A/C compressor relay. · Faulty Evaporator temperature sensor.	· Test the A/C system for leaks. Repair, evacuate and charge the A/C, if required. · Test the compressor clutch coil and replace, if required. · Test the A/C high pressure switch and replace, if required. · Test the A/C heater control module and replace, if required. · Test A/C fuse and replace. · Test A/C compressor relay and replace, if required. · Test evaporator temperature sensor and replace if required.

Downloaded from www.Manualslib.com manuals search engine

CONDITION	POSSIBLE CAUSES	CORRECTION
Normal Pressures, But A/C Performance Test Air Temperatures At Center Panel Outlet Are Too High	· Excessive refrigerant oil in system. · Blend door inoperative or sealing improperly. · Blend door actuator faulty or inoperative.	· Recover the refrigerant from the refrigerant system and inspect the refrigerant oil content. Restore the refrigerant oil to the proper level, if required. · Inspect the blend door for proper operation and sealing. Repair if required. · Replace if faulty.
The Low Side Pressure Is Normal Or Slightly Low, And The High Side Pressure Is Too Low	· Low refrigerant system charge. · Refrigerant flow through the accumulator is restricted. · Refrigerant flow through the evaporator is restricted. · Faulty compressor.	· Test the refrigerant system for leaks. Repair, evacuate and charge the refrigerant system, if required. · Replace the restricted accumulator, if required. · Replace the restricted evaporator coil, if required. · Replace the compressor, if required.
The Low Side Pressure Is Normal Or Slightly High, And The High Side Pressure Is Too High	· Condenser air flow restricted. · Inoperative cooling fan. · Refrigerant system overcharged. · Air in the refrigerant system. · Engine overheating.	· Check the condenser for damaged fins, foreign objects obstructing air flow through the condenser fins, and missing or improperly installed air seals. Clean, repair, or replace components as required. · Test the cooling fan and replace, if required. · Recover the refrigerant from the refrigerant system. Charge the refrigerant system to the proper level, if required. · Test the refrigerant system for leaks. Repair, evacuate and charge the refrigerant system, if required. · Test the cooling system and repair as necessary.
The Low Side Pressure Is Too High, And The High Side Pressure Is Too Low	· Accessory drive belt slipping. · Faulty compressor.	· Inspect the accessory drive belt condition and tension. Tighten or replace the accessory drive belt, if required. · Replace the compressor, if required.
The Low Side Pressure Is Too Low, And The High Side Pressure Is Too High	· Restricted refrigerant flow through the refrigerant lines. · Restricted refrigerant flow through the A/C accumulator. · Restricted refrigerant flow through the condenser. · Faulty A/C expansion valve.	· Inspect the refrigerant lines for kinks, tight bends or improper routing. Correct the routing or replace the refrigerant line, if required. · Replace the accumulator if restricted. · Replace the restricted condenser, if required. · Test A/C expansion valve and replace, if required.

Downloaded from www.Manualslib.com manuals search engine

Heater Performance

Engine coolant is delivered to the heater core through heater hoses. With the engine idling at normal operating temperature, set the temperature control knob in the full hot position, the mode control switch knob in the floor heat position, and the blower motor switch knob in the highest speed position. Using a test thermometer, check the temperature of the air being discharged at the HVAC housing floor outlets. Compare the test thermometer reading to the heater performance chart.

HEATER PERFORMANCE				
Ambient Air Temperature	15.5°C (60°F)	21.1°C (70°F)	26.6°C (80°F)	32.2°C (90°F)
Minimum Air Temperature at Floor Outlet	62.2°C (144°F)	63.8°C (147°F)	65.5°C (150°F)	67.2°C (153°F)

Both of the heater hoses should be hot to the touch. The coolant return heater hose should be slightly cooler than the coolant supply heater hose. If the return hose is much cooler than the supply hose, locate and repair the engine coolant flow obstruction in the cooling system.

Obstructed Coolant Flow

Possible locations or causes of obstructed coolant flow:
- Pinched or kinked heater hoses.
- Improper heater hose routing.
- Plugged heater hoses or supply and return ports at the cooling system connections.
- A plugged heater core.

Mechanical Problems

Possible locations or causes of insufficient heat:
- An obstructed cowl air intake.
- Obstructed heater system outlets.
- A blend door not functioning properly.
- Trapped air in system.

Temperature Control

If the heater outlet air temperature cannot be adjusted with the temperature control knob(s) on the A/C heater control panel, the following could require service:
- The A/C heater control panel.
- The blend door.
- The blend door cable.
- Improper engine coolant temperature.

Downloaded from www.Manualslib.com manuals search engine

ON-VEHICLE SERVICE

Manual Temperature Control Module

Removal & Installation

1. Disconnect the negative battery cable.
2. Remove the bezel of the central control panel.
3. Remove the bolts, and remove the CD player, and then disconnect the harness connectors.
4. Remove the mounting screws (1).

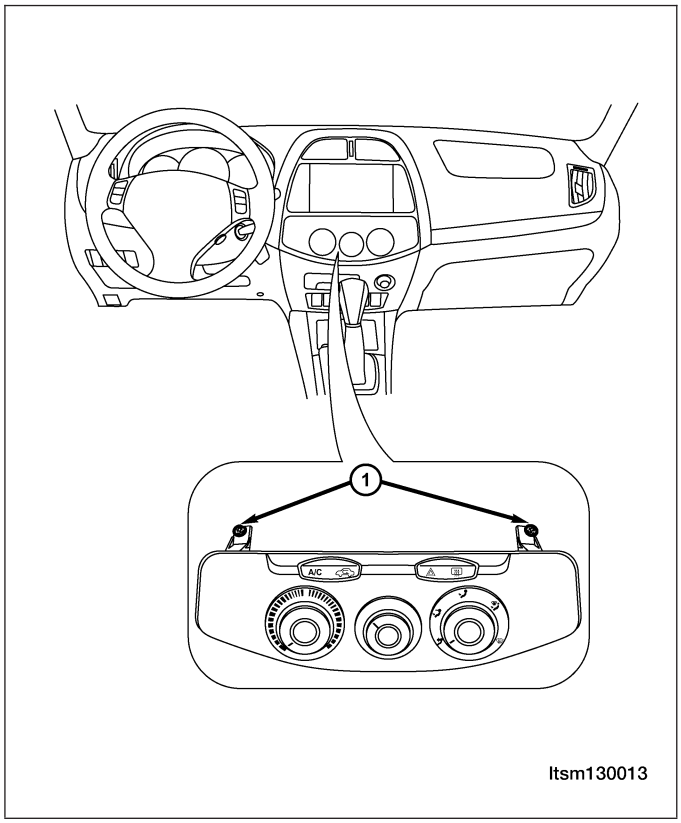

5. Disconnect the electrical connector behind the panel.

Downloaded from www.Manualslib.com manuals search engine

6. Loosen the two blend door and mode door control cables (1).

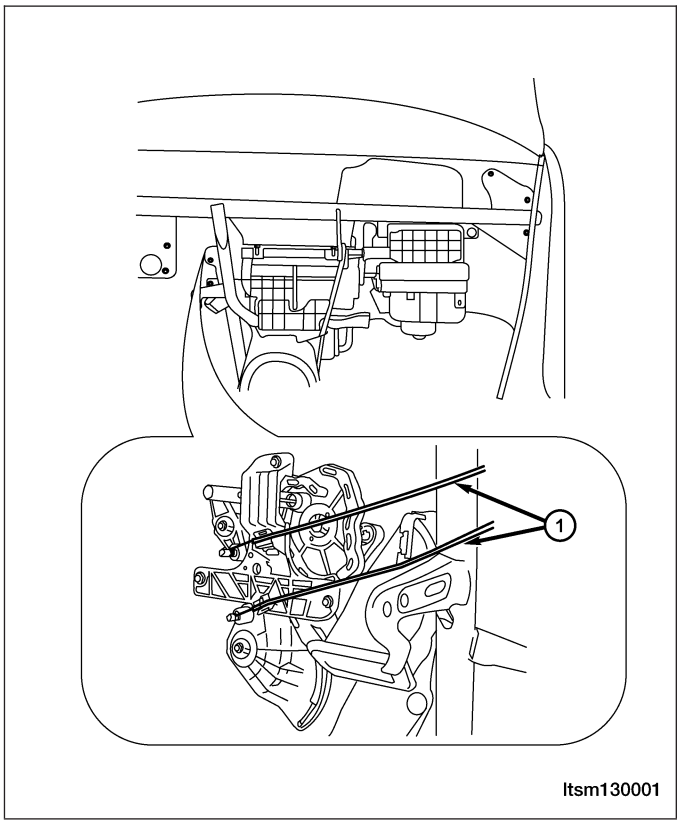

7. Remove the manual temperature control module.
8. Installation is in the reverse order of removal.

Blower Motor Resistor

Removal & Installation

WARNING!

The blower motor resistor may get very hot during normal operation. If the blower motor was turned on prior to servicing the blower motor resistor, wait five minutes to allow the blower motor resistors to cool before performing diagnosis or service. Failure to take this precaution can result in possible personal injury.

CAUTION:
DON'T operate the blower motor with the blower motor resistor removed from the circuit. Failure to take this precaution can result in vehicle damage.

1. Disconnect the negative battery cable.
2. Remove the glove box (See Instrument Panel Removal & Installation in Section 15 Body & Accessories).
3. Disconnect the blower motor resistor electrical connector.

Downloaded from www.Manualslib.com manuals search engine

4. Remove the two bolts (1) attaching the blower motor resistor to the evaporator housing.

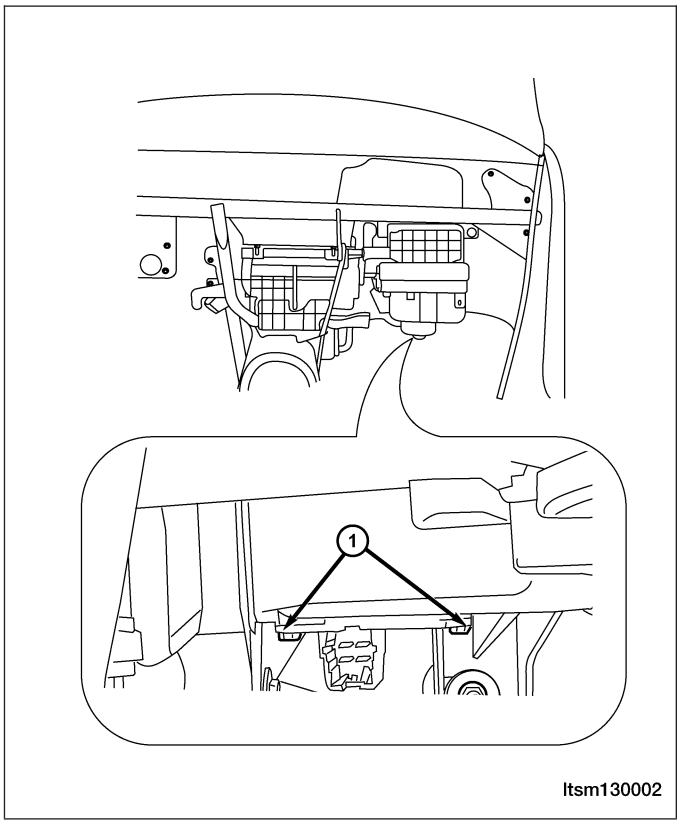

5. Remove the blower motor resistor.
6. Installation is in the reverse order of removal.

Downloaded from www.Manualslib.com manuals search engine

SYSTEM CONTROLS

GENERAL INFORMATION 13-19
Description 13-19
Operation 13-21
Specifications 13-23
Special Tools 13-23

ON-VEHICLE SERVICE 13-24
Recirculation Door Actuator 13-24
Removal & Installation 13-24

Downloaded from www.Manualslib.com manuals search engine

GENERAL INFORMATION

Description

The Heating, Ventilation and Air Conditioning (HVAC) system uses a combination of electrical and vacuum controls. These controls provide the vehicle operator with a number of setting options to help control the climate and comfort within the vehicle. Refer to the owner's manual in the vehicle glove box for more information on the suggested operation and use of these controls.

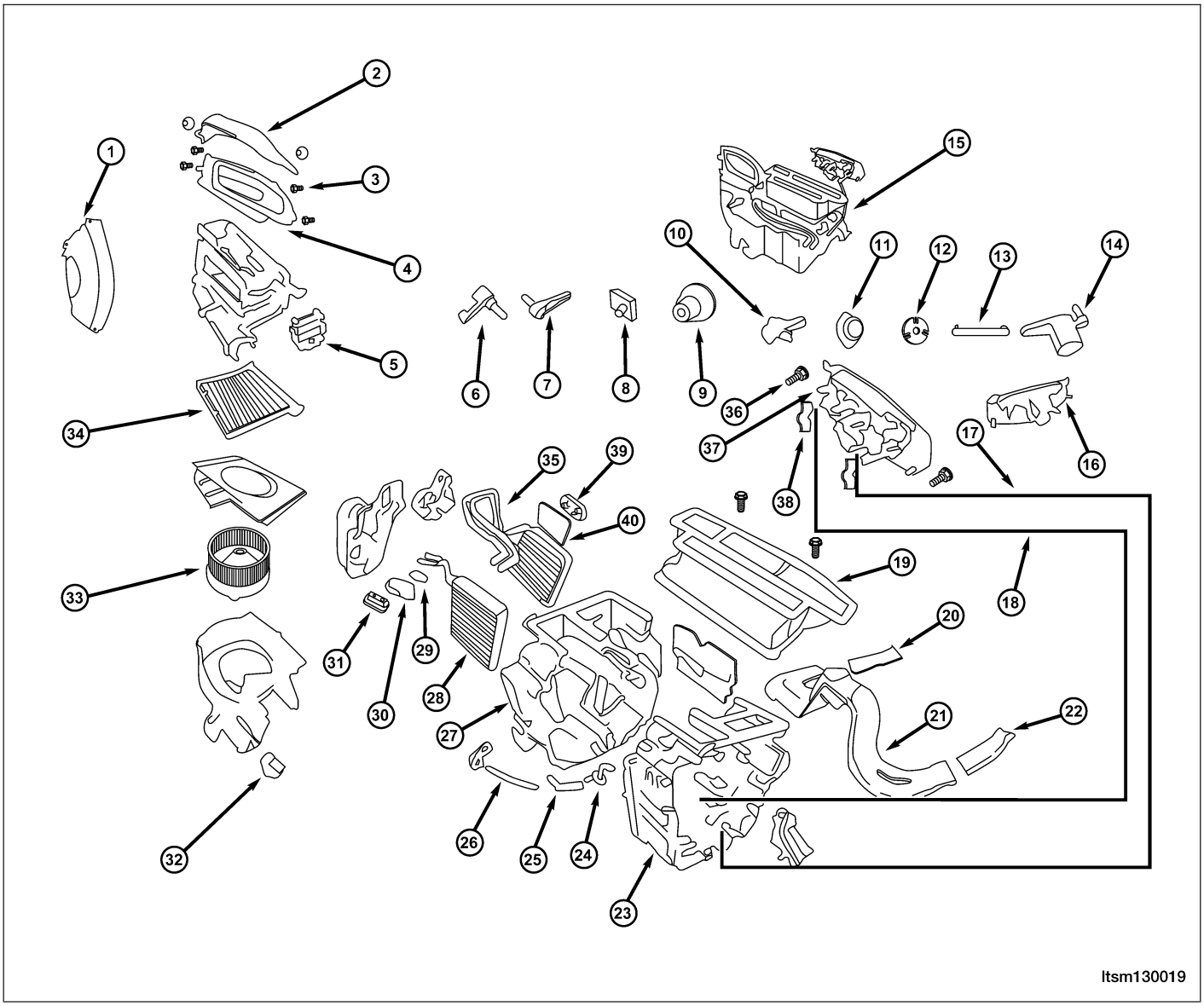

13

Downloaded from www.Manualslib.com manuals search engine

1 - Inlet Shell Shield	21 - Left Outlet
2 - Inlets Shrouds	22 - Right Outlet
3 - Bolt (M6)	23 - Evaporator Assembly Upper Cover
4 - Inlet Shell Assembly	24 - Drain Inner Hose Assembly
5 - Recirculation Door Actuator	25 - Rubber Drain Inside Hose
6 - Mixed Door Lever	26 - Rubber Drain Outside Hose
7 - Defrost Door Lever	27 - Evaporator Assembly Lower Cover
8 - Water Hose Clamp	28 - Evaporator Core
9 - Blower Control Dial	29 - Sealed Gasket
10 - Defrost Door Linkage	30 - Sponge
11 - Mode Door Dial	31 - Expansion Valve
12 - Plastic Washer	32 - Blower Motor Resistor
13 - Mode Door Dial Linkage	33 - Blower Motor
14 - Mode Door Dial Lever	34 - HVAC Filter
15 - Evaporator Assembly	35 - Heater Core
16 - HVAC Control Panel	36 - HVAC Control Panel Bolt
17 - Temperature Control Dial Cable	37 - HVAC Control Panel
18 - Mode Door Cable	38 - Clamp
19 - Outlet Assembly	39 - Water Hose Sealed Gasket
20 - Clamp	40 - Sponge

Downloaded from www.Manualslib.com manuals search engine

Operation

The A/C heater control module panel is located on the instrument panel inboard of the steering column and above the radio. The A/C heater control panel contains a rotary-type temperature control dial (1), a rotary-type mode control switch dial (3), a rotary-type blower motor speed control switch (2) and an air conditioning compressor push button switch (6).

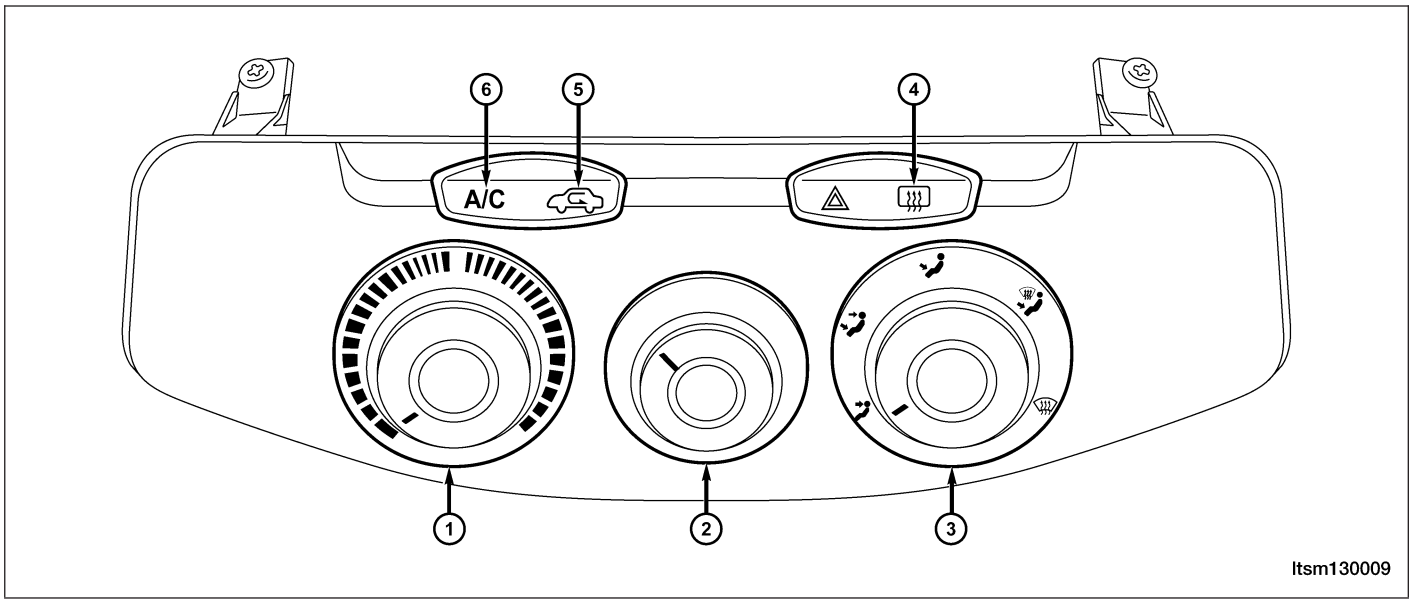

1 - Temperature Control Switch	4 - Rear Window Defogger Switch
2 - Blower Switch	5 - Recirculation Switch
3 - Mode Control Switch	6 - A/C Switch

Temperature Control Dial

Increases or decreases the set temperature.

Recirculation Switch

- When the recirculation switch is ON, the switch indicator turns ON, and air inlet is set to recirculation.
- When recirculation switch is OFF, air inlet is set to fresh. The recirculation mode can be re-entered by pressing the recirculation switch again.

Rear Window Defogger Switch

Controls the operation of the rear window defogger.

A/C Switch

Controls the A/C compressor ON and OFF function.

Mode Control Dial

Controls the direction of the air flow through the air discharge outlets.

Blower Control Dial

Manually controls the four blower speeds and the ON and OFF function.

Downloaded from www.Manualslib.com manuals search engine

Discharge Air Flow

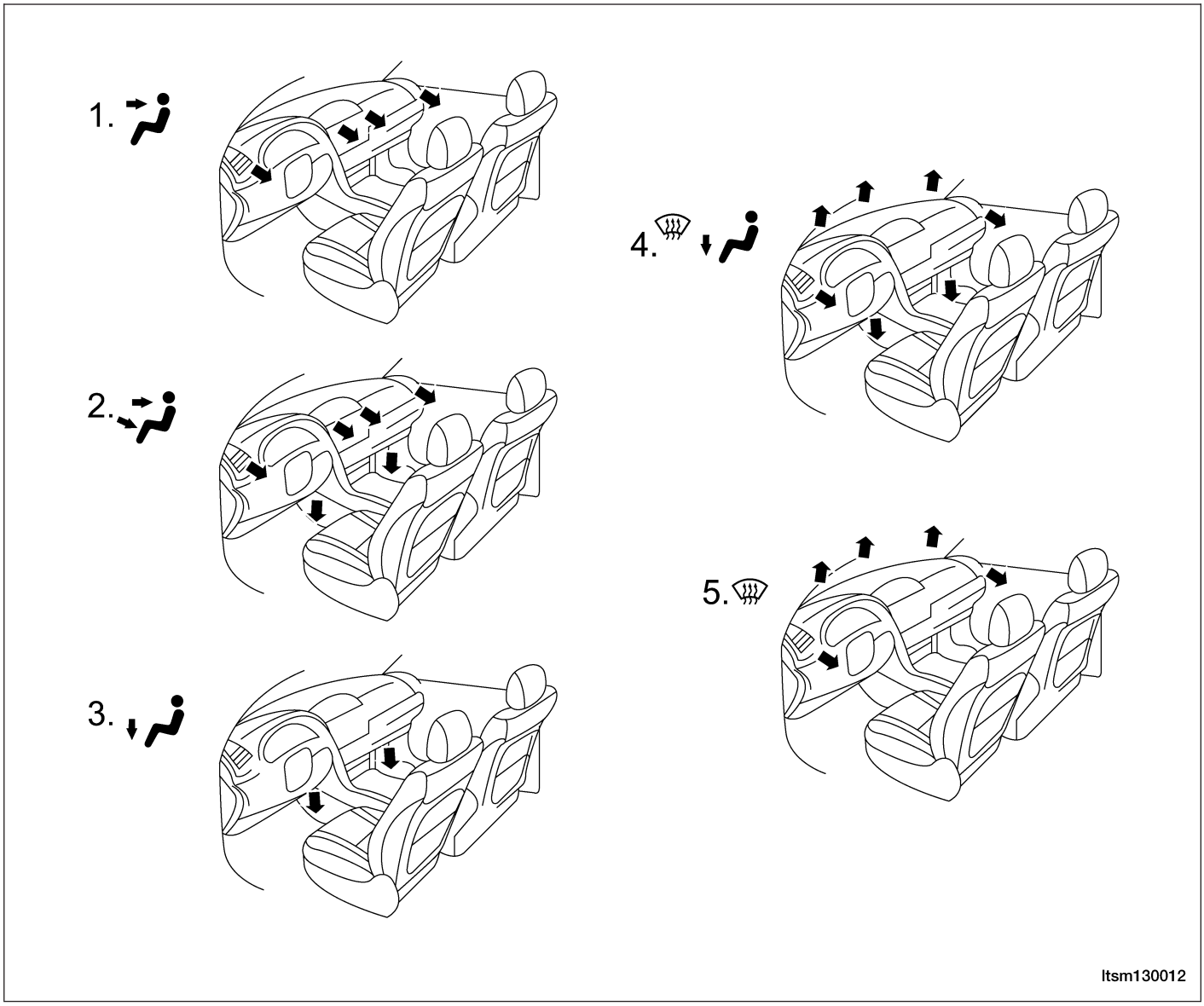

1. Panel Mode	Air comes from the outlets in the instrument panel. Each of these outlets can be individually adjusted to direct the flow of air.
2. Bi-Level Mode	Air comes from both the instrument panel outlets and the floor outlets.
3. Floor Mode	Air comes from the floor outlets. A slight amount of air is directed through the defrost and side window demister outlets.

4. Defrost & Floor Mode	Air comes from the floor, defrost and side window demister outlets. This mode works best in cold or snowy conditions.
5. Defrost Mode	Air comes from the windshield and side window demister outlets. Use this setting when necessary to defrost your windshield and side windows.

Downloaded from www.Manualslib.com manuals search engine

Specifications

Torque Specifications

DESCRIPTION	TORQUE (N·m)
All General Service Screws	5
Recirculation door actuator screws	2

Special Tools

Digital Multimeter Fluke 15B & 17B	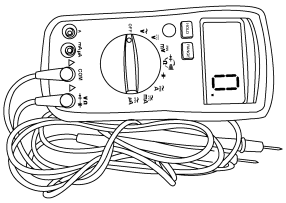 besm030002

Downloaded from www.Manualslib.com manuals search engine

Recirculation Door Actuator

Removal & Installation

1. Remove the rod connected to the recirculation door actuator.
2. Remove the bolt (1) connecting the recirculation door actuator to the bracket.
   (Tighten: Recirculation door actuator bolt to 2 N·m)
3. Remove the recirculation door actuator.
4. Installation is in the reverse order of removal.

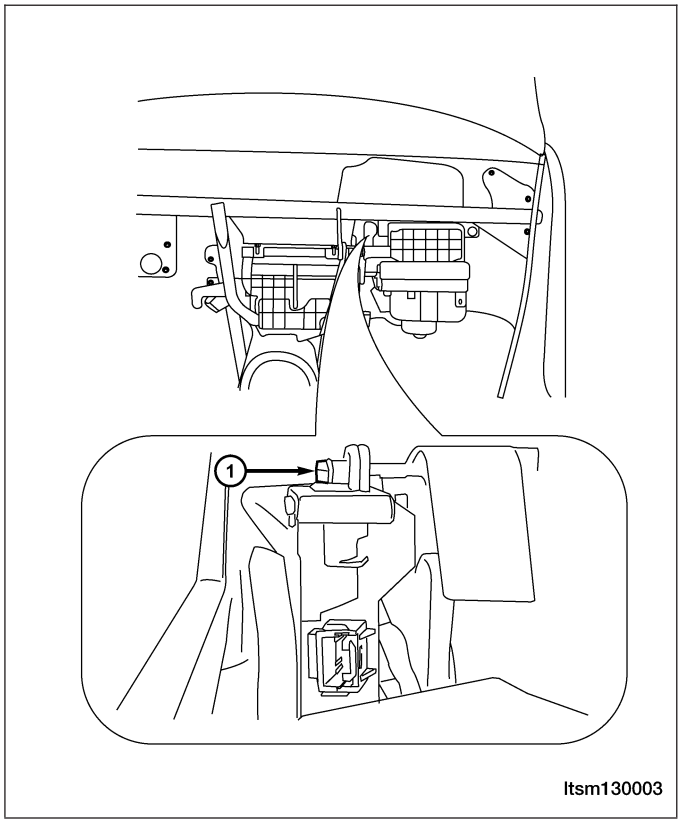

Downloaded from www.Manualslib.com manuals search engine

AIR DISTRIBUTION

GENERAL INFORMATION 13-26
- Description 13-26
- Operation 13-26
- Specifications 13-26
- Special Tools 13-27

DIAGNOSIS & TESTING 13-28
- Blower Motor Electrical Troubleshooting 13-28
- Blower Motor Noise 13-28
- Blower Motor Vibration 13-28

ON-VEHICLE SERVICE 13-29
- **HVAC Housing** 13-29
  - Removal & Installation 13-29
- **Blower Motor** 13-30
  - Description 13-30
  - Operation 13-30
  - Removal & Installation 13-31

Downloaded from www.Manualslib.com manuals search engine

GENERAL INFORMATION

Description

All models are equipped with a common HVAC housing assembly that combines A/C and heating capabilities into a single unit mounted within the passenger compartment. The HVAC housing assembly consists of three separate housings:

- HVAC housing — The HVAC housing is mounted to the dash panel behind the instrument panel and contains the A/C evaporator. The HVAC housing has mounting provisions for the air inlet housing, blower motor and the air distribution housing.
- Air distribution housing — The air distribution housing is mounted to the rear of the HVAC housing and contains the heater core, blend-air and mode-air doors and door linkage.
- Air inlet housing — The air inlet housing is mounted to the passenger side end of the HVAC housing. The air inlet housing contains the recirculation-air door and actuator.

Operation

The A/C system is designed for the use of a non-CFC, R-134a refrigerant and uses an A/C evaporator to cool and dehumidify the incoming air prior to blending it with the heated air. Temperature control determines the discharge air temperature by operating the temperature control cable, which moves the blend-air door. This allows an almost immediate control of the output air temperature of the system. The mode door cable operates the mode-air doors which direct the flow of the conditioned air out the various air outlets, depending on the mode selected. When equipped with A/C, the recirculation door actuator operates the recirculation-air door which closes off the fresh air intake and recirculates the air already inside the vehicle. The electric recirculation door actuator and the blower motor are connected to the vehicle electrical system by the instrument panel wire harness. The blower motor controls the velocity of air flowing through the HVAC housing assembly by spinning the blower wheel within the HVAC housing at the selected speed by use of the blower motor resistor, which is around the blower motor.

The air distribution housing must be removed from the HVAC housing and disassembled for service of the blend-air and mode-air doors. The air inlet housing must be removed from the HVAC housing and disassembled for service of the recirculation-air door. The HVAC housing must be removed from the vehicle and disassembled for service of the A/C evaporator.

Specifications

Torque Specifications

DESCRIPTION	TORQUE (N·m)
All General Service Screws	2
Evaporator Bolts	4
Expansion Valve Bolts	10
Pipeline Stent	4
Refrigerant Lines To A/C Accumulator	6
Condenser Bolts	6
Refrigerant Lines To A/C Compressor Bolt	30
Refrigerant Lines	10
Refrigerant Lines To A/C Evaporator Bolt	25

Downloaded from www.Manualslib.com manuals search engine

Special Tools

Digital Multimeter Fluke 15B & 17B	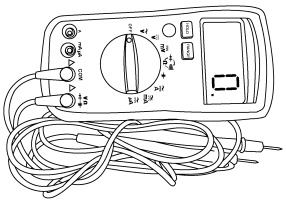 besm030002

Downloaded from www.Manualslib.com manuals search engine

DIAGNOSIS & TESTING

Blower Motor Electrical Troubleshooting

To determine if an open condition exists within the blower motor circuit wiring, it is necessary to disconnect the negative battery cable and check for continuity within the blower motor circuits using an ohmmeter.

Possible causes of an inoperative blower motor include the following:
- Open fuse
- Inoperative blower motor switch
- Inoperative blower motor resistor
- Inoperative blower motor
- Inoperative blower motor circuit wiring or wiring harness electrical connectors

Blower Motor Noise

To determine if the blower motor is the source of the noise, simply switch the blower motor from Off to On. To verify that the blower motor is the source of the noise, unplug the blower motor wire harness connector and operate the heater-A/C system. If the noise goes away, possible causes include:
- Foreign material on fresh air inlet screen
- Foreign material in blower wheel
- Foreign material in HVAC housing
- Incorrect blower motor mounting
- Deformed or damaged blower wheel
- Worn blower motor bearings or brushes

Blower Motor Vibration

Possible causes of a blower motor vibration include:
- Incorrect blower motor mounting
- Foreign material in blower wheel
- Deformed or damaged blower wheel
- Worn blower motor bearings

Downloaded from www.Manualslib.com manuals search engine

HVAC Housing

Removal & Installation

1. Evacuate the A/C system (See A/C System Evacuation and Recharge in Section 13 Heating & Air Conditioning).
2. Drain the cooling system and then disconnect heater hoses (1). (See Cooling System Draining & Filling in Section 06 Cooling).

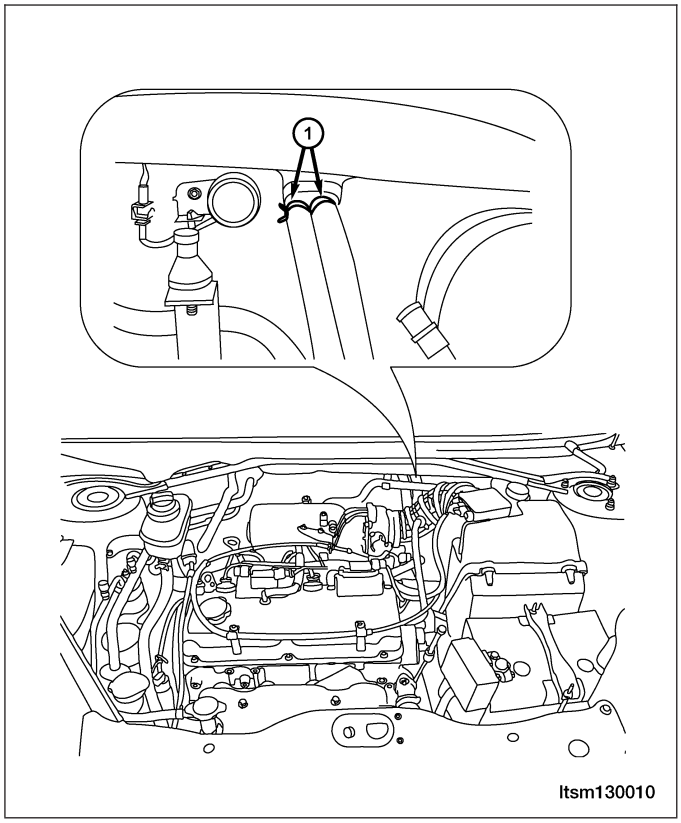

3. Remove the instrument panel (See Instrument Panel Removal & Installation in Section 15 Body & Accessories).
4. Remove the evaporator assembly upper retaining bolts (1).

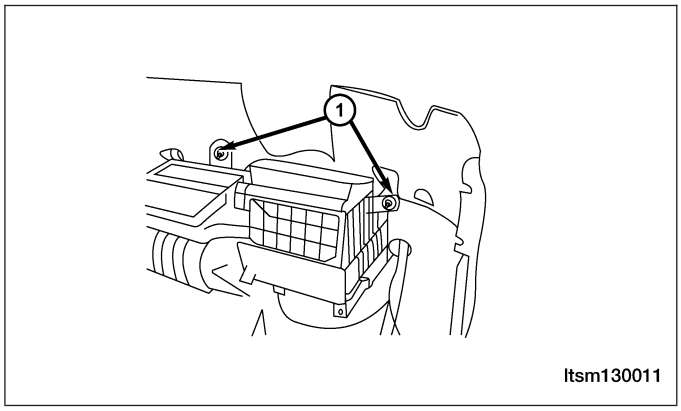

Downloaded from www.Manualslib.com manuals search engine

5. Remove the evaporator assembly lower retaining bolts (1).

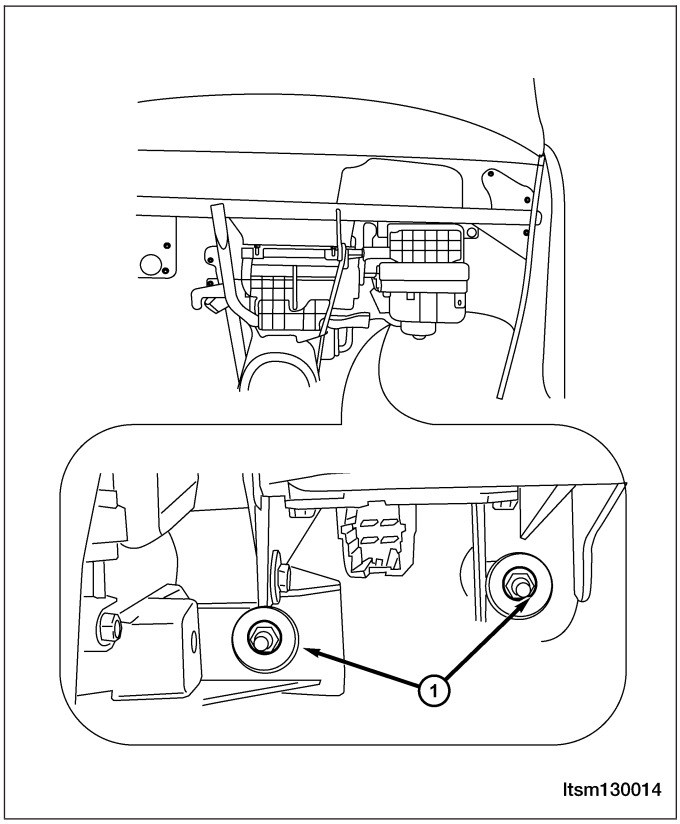

6. Disconnect the electrical connectors. Remove the evaporator assembly.
7. Installation is in the reverse order of removal.

Installation Notes:

- Lubricate new rubber O-ring seals with clean refrigerant oil and install them and new gaskets onto the refrigerant line fittings.
- Use only the specified O-rings as they are made of a special material for the R-134a system.
- Use only refrigerant oil recommended for the A/C compressor in the vehicle.
- Recharge the A/C system (See A/C System Evacuation and Recharge in Section 13 Heating & Air Conditioning).

Blower Motor

Description

The blower motor is mounted in the HVAC housing. The following are blower motor functions:

- The blower motor will operate whenever the ignition switch is in the ON position and the blower motor control is in any position except Off.
- The blower motor can be accessed for service from underneath the instrument panel.
- The blower motor and blower motor wheel are factory balanced as an assembly and cannot be adjusted or repaired and must be replaced if found inoperative or damaged.

Operation

The blower motor is used to control the velocity of air moving through the HVAC housing by spinning the blower wheel within the HVAC air inlet housing at the selected speed. The blower motor is a 12-volt, direct current (DC) motor mounted within a plastic housing with an integral wire harness connector. The blower wheel is secured to the blower motor shaft and is positioned within the air inlet housing on the passenger side of the HVAC housing.

Downloaded from www.Manualslib.com manuals search engine

Removal & Installation

NOTE :
The blower motor is located on the bottom of the HVAC housing. The blower motor can be removed from the vehicle without having to remove the HVAC housing.

1. Disconnect the blower motor electrical connector.
2. Remove the glove box (See Instrument Panel Removal & Installation in Section 15 Body & Accessories).
3. Remove the mounting bolts (1) for the blower motor.

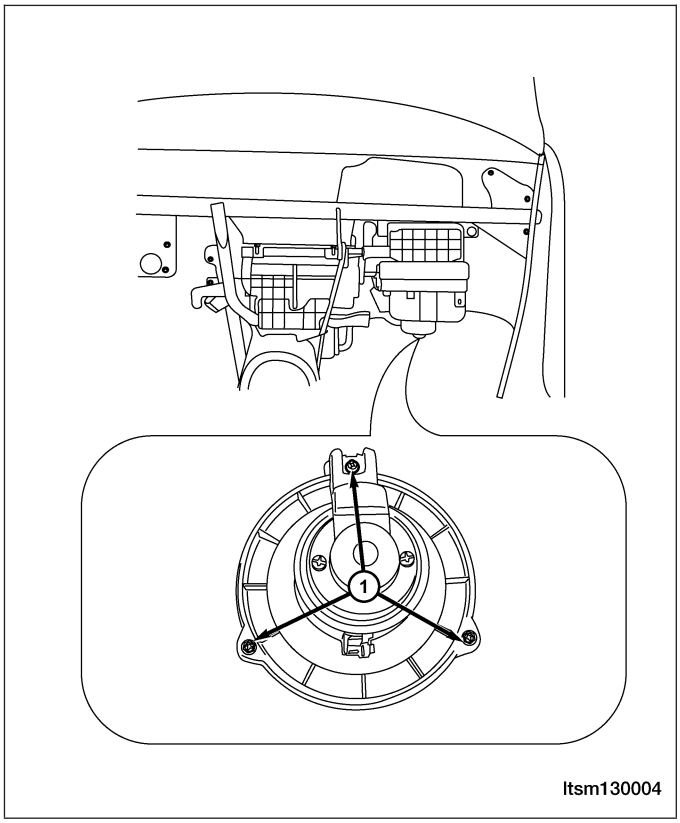

4. Remove the blower motor.
5. Installation is in the reverse order of removal.

Downloaded from www.Manualslib.com manuals search engine

SYSTEM PLUMBING

GENERAL INFORMATION 13-33
Description 13-33
Operation 13-33
Specifications 13-33
Special Tools 13-34

DIAGNOSIS & TESTING 13-35
Mechanical Problems 13-35
Temperature Control 13-35
A/C Compressor Noise Testing 13-35
Refrigerant System Leaks 13-36
Refrigerant System Empty 13-36
Refrigerant System Low 13-36

ON-VEHICLE SERVICE 13-37

A/C System Evacuation and Recharge 13-37
Connecting Refrigerant Recovery/ Recycling Station 13-37
A/C System Evacuation 13-38
A/C System Recharge 13-38

Compressor 13-39
Description 13-39
Operation 13-39
Removal & Installation - 1.6L & 1.8L & 2.0L 13-39
Removal & Installation - 2.4L 13-41

Evaporator 13-42
Description 13-42
Operation 13-42
Removal & Installation 13-42

Condenser 13-42
Description 13-42
Operation 13-42
Removal & Installation 13-43

Accumulator 13-43
Description 13-43
Operation 13-43
Removal & Installation 13-43

Liquid Line 13-44
Description 13-44
Operation 13-44
Removal & Installation 13-44

Suction Line 13-45
Description 13-45
Operation 13-45
Removal & Installation 13-45

Heater Core 13-47
Description 13-47
Operation 13-47
Removal & Installation 13-47

Downloaded from www.Manualslib.com manuals search engine

GENERAL INFORMATION

Description

The A/C refrigerant lines and pipes are used to carry the refrigerant between the various A/C system components.

Any kinks or sharp bends in the refrigerant lines and hoses will reduce the capacity of the entire A/C system and can reduce the flow of refrigerant within the system.

Operation

High pressure is produced in a refrigerant system when the A/C compressor is operating. Extreme care must be exercised to make sure that each of the refrigerant system connections is pressure-tight and leak free. It is a good practice to inspect all flexible hose refrigerant lines at least once a year to make sure they are in good condition and properly routed. Depending on vehicle, model and market application, refrigerant lines are connected to each other or other A/C system components with block-type or quick-connect type fittings. To ensure the integrity of the refrigerant system, O-rings and/or gaskets may be used to seal the refrigerant system connections. The refrigerant lines and hoses cannot be repaired and must be replaced if leaking or damaged.

WARNING!

The A/C system contains refrigerant under high pressure. Repairs should only be performed by qualified service personnel. Serious or fatal injury may result from improper service procedures.
If accidental A/C system discharge occurs, ventilate the work area before resuming service. Large amounts of refrigerant released in a closed work area will displace the oxygen and cause suffocation and serious or fatal injury.

CAUTION:
Never add R-12 to a refrigerant system designed to use R-134a. Do not use R-12 equipment or parts on an R-134a A/C system. These refrigerants are not compatible and damage to the A/C system will result.

CAUTION:
Never use R-12 refrigerant oil in an A/C system designed to use R-134a refrigerant oil. These refrigerant oils are not compatible and damage to the A/C system will result.

CAUTION:
Do not run the engine with a vacuum pump in operation or with a vacuum present within the A/C system. Failure to follow this caution will result in serious A/C compressor damage.

CAUTION:
Do not overcharge the refrigerant system. Overcharging will cause excessive compressor head pressure and can cause compressor noise and A/C system failure.

Specifications

Torque Specifications

DESCRIPTION	TORQUE (N·m)
A/C Compressor Bracket Bolts	40
A/C Compressor Line Bolts	20

Downloaded from www.Manualslib.com manuals search engine

A/C Refrigerant Charge Specifications

DESCRIPTION	CAPACITY (kg)
R-134a Refrigerant	0.700

A/C Oil Specifications

DESCRIPTION	CAPACITY (ml)
Compressor	150
Condenser, Accumulator, Lines	15
Evaporator	30

Special Tools

Refrigerant Recovery/Recycling Station	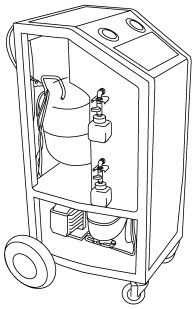 Itsm130018

Downloaded from www.Manualslib.com manuals search engine

DIAGNOSIS & TESTING

Mechanical Problems

Possible locations or causes of insufficient heat:
- An obstructed cowl air intake.
- Obstructed heater system outlets.
- A blend door not functioning properly.
- Trapped air in system.

Temperature Control

If the heater outlet air temperature cannot be adjusted with the temperature control knob(s) on the A/C heater control panel, the following could require service:
- The A/C heater control.
- The blend door actuator(s).
- The wire harness circuits for the A/C heater control or the blend door actuator(s).
- The blend door(s).
- Improper engine coolant temperature.

A/C Compressor Noise Testing

When investigating an A/C system related noise, you must first know the conditions under which the noise occurs. These conditions include: weather, vehicle speed, transaxle in gear or neutral, engine speed, engine temperature, and any other special conditions. Noises that develop during A/C operation can often be misleading. For example: what sounds like a failed bearing, may be caused by loose bolts, nuts, mounting brackets or a loose compressor assembly.

NOTE :
The A/C compressor must be replaced if any unusual noise is heard from the compressor itself.

NOTE :
Drive belts are speed sensitive. At different engine speeds and depending upon drive belt tension, drive belts can develop noises that are mistaken for an A/C compressor noise. Improper drive belt tension can cause a misleading noise when the compressor is operating at maximum displacement, which may not occur when the compressor is at minimum displacement.

1. Select a quiet area for testing.
2. Duplicate the complaint conditions as much as possible.
3. Turn the A/C system On and Off several times to clearly identify any compressor noise.
4. Listen to the A/C compressor while it is operating at maximum and minimum displacement.
5. Probe the A/C compressor with an engine stethoscope or a long screwdriver with the handle held to your ear to better localize the source of the noise.
6. To duplicate high-ambient temperature conditions (high head pressure), restrict the air flow through the A/C condenser. Install a manifold gauge set or a scan tool to ensure that the discharge pressure does not exceed 2600 kPa.
7. Check the condition of the accessory drive belt.

   NOTE: The A/C compressor must be replaced if the drive hub is broken or if the compressor shaft does not rotate smoothly.
8. Check the compressor hub and pulley and bearing assembly. Ensure that the hub and pulley are properly aligned and that the pulley bearing is mounted securely to the A/C compressor.
9. Check the refrigerant system plumbing for incorrect routing, rubbing or interference, which can cause unusual noises. Also check the refrigerant lines and hoses for kinks or sharp bends that will restrict refrigerant flow, which can cause noises.
10. Loosen all of the compressor mounting hardware and retighten.
    CAUTION: Do not run the engine with a vacuum pump in operation or with a vacuum present within the A/C system. Failure to follow this caution will result in serious A/C compressor damage.
11. If the noise is from opening and closing the high pressure relief valve, recover, evacuate and recharge the refrigerant system. If the high pressure relief valve still does not seat properly, replace the A/C compressor.

Downloaded from www.Manualslib.com manuals search engine

12. If the noise is from liquid refrigerant slugging in the A/C suction line, replace the A/C accumulator and check the refrigerant oil level and the refrigerant system charge.
13. If a slugging condition still exists after replacing the A/C accumulator, replace the A/C compressor.

Refrigerant System Leaks

WARNING!

R-134a service equipment or vehicle A/C systems should not be pressure tested or leak tested with compressed air. Mixture of air and R-134a can be combustible at elevated pressures. These mixtures are potentially dangerous and may result in fire or explosion causing property damage, personal injury or death. Avoid breathing A/C refrigerant and lubricant vapor or mist. Exposure may irritate eyes, nose and throat. Use only approved service equipment meeting SAE requirements to discharge an R-134a system. If accidental system discharge occurs, ventilate work area before resuming service.

NOTE :
If the A/C refrigerant system charge is empty or low, a leak in the A/C system is likely. Inspect all A/C lines, fittings and components for an oily residue. Oil residue can be an indicator of an A/C system leak location.

NOTE :
The only way to correctly determine if the refrigerant system is fully charged with R-134a is to completely evacuate and recharge the A/C system.

Refrigerant System Empty

1. Evacuate the refrigerant system to the lowest degree of vacuum possible. Determine if the system holds a vacuum for 15 minutes. If vacuum is held, a leak is probably not present. If system will not maintain vacuum level, proceed to STEP 2.
2. Prepare and dispense 0.3 kilograms of R-134a refrigerant into the evacuated refrigerant system and proceed to STEP 1 of the System Low procedure.

Refrigerant System Low

1. Position the vehicle in a wind-free work area. This will aid in detecting small leaks.
2. Operate the heating-A/C system with the engine at idle under the following conditions for at least 5 minutes: Doors or windows open, transaxle in Park or Neutral with the parking brake set (depending on application), A/C-Heater controls set to outside air, full cool, panel mode, high blower and with A/C compressor engaged.
3. Shut the vehicle Off and wait 2 - 7 minutes. Then use an electronic leak detector that is designed to detect R-134a refrigerant and search for leaks. Fittings, lines or components that appear to be oily usually indicate a refrigerant leak. To inspect the A/C evaporator for leaks, insert the leak detector probe into the drain tube opening or an air outlet. A dye for R-134a is available to aid in leak detection. Use only approved refrigerant dye.

CAUTION:
A leak detector only designed for R-12 refrigerant will not detect leaks in an R-134a refrigerant system.

Downloaded from www.Manualslib.com manuals search engine

A/C System Evacuation and Recharge

Connecting Refrigerant Recovery/Recycling Station

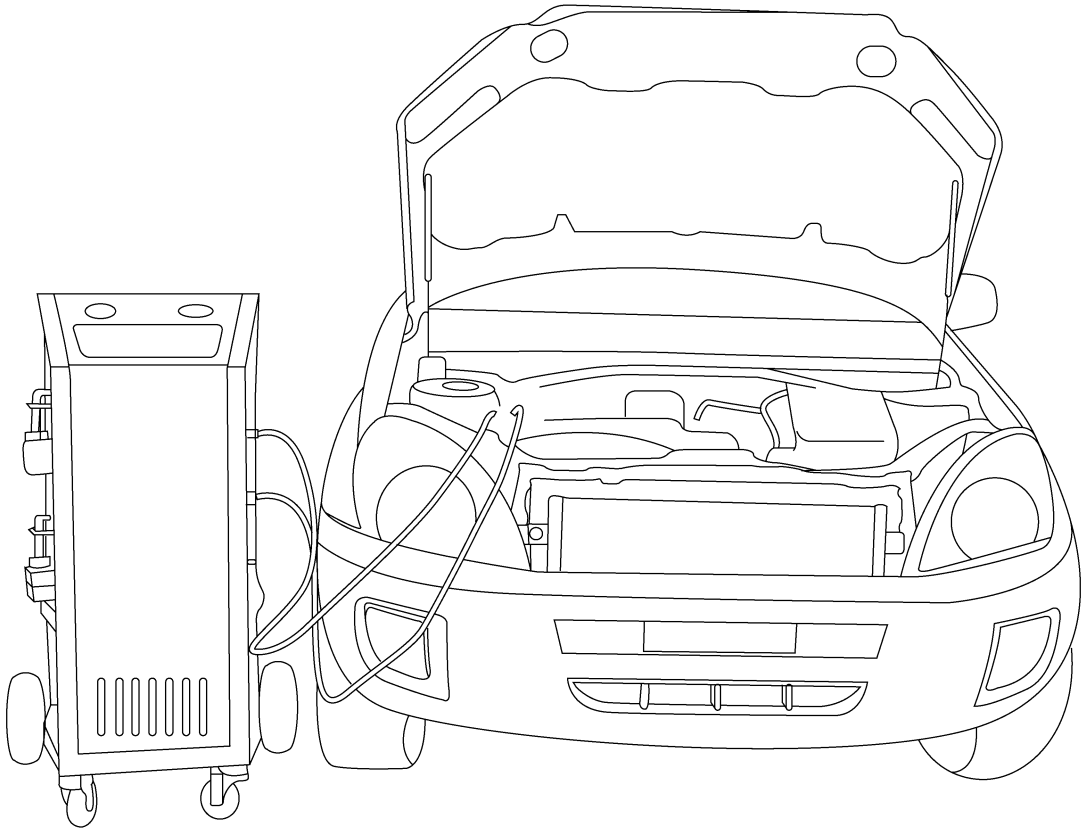

Itsm130023

WARNING!
The A/C system is under high pressure, use caution when servicing the A/C system.

Downloaded from www.Manualslib.com manuals search engine

1. Connect the refrigerant recovery/recycling station to the vehicles high and low side A/C line connectors.

   NOTE: The refrigerant recovery/recycling station connectors are connected to the vehicle in the following way:

- BLUE connector (1) is connected to the A/C low side fitting.
- RED connector (2) is connected to the A/C high side fitting.

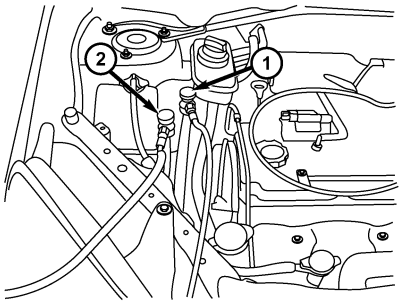

ltsm130022

A/C System Evacuation

CAUTION:

Do NOT run the engine with a vacuum pump in operation or with a vacuum present within the A/C system. Failure to follow this caution will result in serious A/C compressor damage.

NOTE :

Special effort must be used to prevent moisture from entering the A/C system oil. Moisture in the oil is very difficult to remove and will cause a reliability problem with the A/C compressor.

If the refrigerant system has been open to the atmosphere, it must be evacuated before the system can be filled. Moisture and air mixed with the refrigerant will raise the compressor high pressure above acceptable operating levels. This will reduce the performance of the A/C system and damage the A/C compressor. Moisture will boil at near room temperature when exposed to vacuum.

NOTE :

When connecting the service equipment coupling to the line fitting, verify that the valve of the coupling is fully closed. This will reduce the amount of effort required to make the connection.

To evacuate the refrigerant system:

1. With the engine OFF, connect a suitable charging station, refrigerant recovery machine or a manifold gauge set with vacuum pump and refrigerant recovery equipment. Do not operate the engine with a vacuum on the A/C system.
2. Open the suction and discharge valves and start the vacuum pump. The vacuum pump should run a minimum of 45 minutes prior to charge to eliminate all moisture in system. When the suction gauge reads to the lowest degree of vacuum possible for 30 minutes, close all valves and turn off vacuum pump. If the system fails to reach specified vacuum, the refrigerant system likely has a leak that must be corrected. If the refrigerant system maintains specified vacuum for at least 30 minutes, start the vacuum pump, open the suction and discharge valves. Then allow the system to evacuate an additional 10 minutes.
3. Close all valves.
4. Turn off and disconnect the vacuum pump.
5. Charge the refrigerant system.

A/C System Recharge

After all refrigerant system leaks have been repaired and the refrigerant system has been evacuated, a refrigerant charge can be injected into the system.

CAUTION:

A small amount of refrigerant oil is removed from the A/C system each time the refrigerant system is recovered and evacuated. Before charging the A/C system, you MUST replenish any oil lost during the recovery process.

1. Evacuate the refrigerant system (See A/C System Evacuation and Recharge in Section 13 Heating & Air Conditioning).

Downloaded from www.Manualslib.com manuals search engine

2. A manifold gauge set and an R-134a refrigerant recovery/recycling/charging station that meets SAE standard J2210 should be connected to the refrigerant system.
3. Open both the suction and discharge valves, then open the charge valve to allow the refrigerant to flow into the system.
4. When the transfer of refrigerant has stopped, close both the suction and discharge valves.
5. If all of the refrigerant charge did not transfer from the dispensing device, open all of the windows in the vehicle and set the heating-A/C system controls so that the A/C compressor is operating and the blower motor is running at its lowest speed setting. Run the engine at a steady high idle (about 2000 RPM).
6. Open the low-pressure valve to allow the remaining refrigerant to transfer to the refrigerant system.

WARNING!

Take care not to open the discharge (high pressure) valve at this time. Failure to follow this warning could result in possible personal injury or death.

7. Disconnect the refrigerant recovery/recycling station from the refrigerant system service ports.
8. Reinstall the caps onto the refrigerant system service ports.

Compressor

Description

Vehicles equipped with the 1.6L & 1.8L & 2.0L engine use a SD7V16 clutch-less compressor. The 2.4L equipped vehicles use a V5 clutch-less compressor. The compressor is a variable displacement compressor. The largest displacement is 161.3 ml/r, displacement range of 5% to 100%.

CAUTION:

DON'T run the engine with a vacuum pump in operation or with a vacuum present within the A/C system. Failure to follow this caution will result in serious A/C compressor damage.

NOTE :

The compressor drive hub and the pulley and bearing assembly cannot be serviced separately from the A/C compressor. In the event of drive hub or pulley and bearing assembly damage or failure, the A/C compressor, drive hub and pulley and bearing must be replaced as an assembly.

Operation

The A/C compressor is controlled by the Engine Control Module (ECM), depending on engine application. The ECM calculates compressor displacement required by A/C system load and demand by monitoring vehicle speed, A/C high side pressure, engine speed, evaporator temperature, accelerator pedal position, ambient temperature and A/C-Heater request signals. The ECM then sends a pulse width modulated signal to the A/C compressor control solenoid to increase or decrease refrigerant flow through an orifice located within the compressor housing. The amount of refrigerant allowed to pass through the orifice in the compressor determines the head pressure which controls the angle of the swash plate, which in turn, determines the amount of compressor displacement. When there is no demand for A/C, the swashplate is adjusted to nearly a zero degree angle, which removes compressor torque drag from the engine.

NOTE :

The A/C compressor cannot be repaired and it must be replaced if found inoperative or damaged. If an internal failure of the A/C compressor has occurred, the A/C accumulator and the A/C liquid line must also be replaced.

Removal & Installation - 1.6L & 1.8L & 2.0L

WARNING!

Review safety precautions and warnings in this group before performing this procedure. Failure to follow the warnings and cautions could result in possible personal injury or death.

Downloaded from www.Manualslib.com manuals search engine

CAUTION:
The A/C accumulator and the A/C liquid line must be replaced if an internal failure of the A/C compressor has occurred. Failure to replace the A/C accumulator and the A/C liquid line can cause serious damage to the replacement A/C compressor.

NOTE :
When replacing multiple A/C system components, determine how much oil should be removed from the new A/C compressor.

NOTE :
Replacement of the refrigerant line O-ring seals and gaskets is required anytime a refrigerant line is opened. Failure to replace the rubber O-ring seals and metal gaskets could result in a refrigerant system leak.

1. Evacuate the A/C system (See A/C System Evacuation and Recharge in Section 13 Heating & Air Conditioning).
2. Disconnect the A/C compressor electrical connector.
3. Remove the engine drive belt (See Drive Belt Removal & Installation in Section 02 Engine).

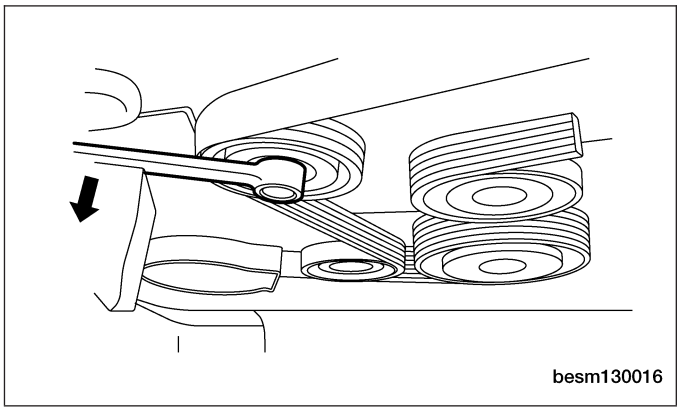
besm130016

4. Remove the intake manifold (See Intake Manifold Removal & Installation in Section 02 Engine).
5. Remove the A/C compressor line bolt (1) from the A/C compressor.
   (Tighten: A/C compressor line bolt to 20 N·m)
   NOTE: After removing the A/C lines, plug the A/C lines to prevent any debris from entering the A/C system.

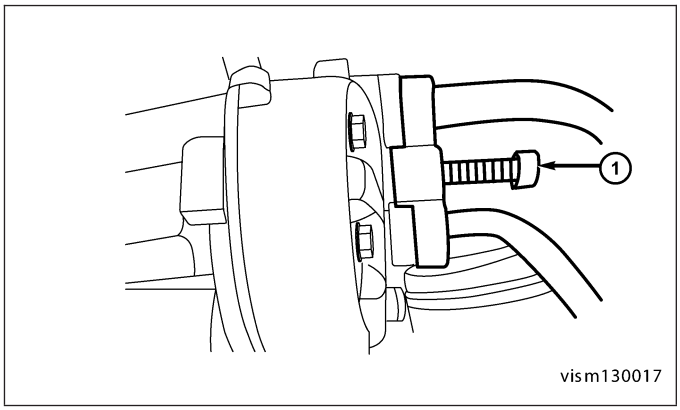

vism130017

6. Loosen the A/C compressor bracket bolt connecting the A/C compressor and bracket.
   (Tighten: A/C compressor bracket bolt to 40 N·m)

Downloaded from www.Manualslib.com manuals search engine

7. Remove the A/C compressor bracket bolts (1). (Tighten: A/C compressor bracket bolts to 40 N·m)
8. Carefully remove the A/C compressor and bracket assembly.
9. Installation is in the reverse order of removal.

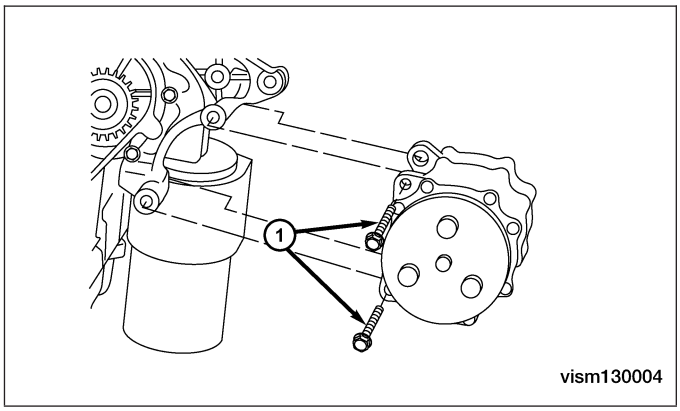

Installation Notes:

- Lubricate new rubber O-ring seals with clean refrigerant oil and install them and new gaskets onto the refrigerant line fittings.
- Use only the specified O-rings as they are made of a special material for the R-134a system.
- Use only refrigerant oil of the type recommended for the A/C compressor in the vehicle.
- Recharge the A/C system (See A/C System Evacuation and Recharge in Section 13 Heating & Air Conditioning).

Removal & Installation - 2.4L

1. Evacuate the A/C system (See A/C System Evacuation and Recharge in Section 13 Heating & Air Conditioning).
2. Disconnect the A/C compressor electrical connector.
3. Remove the engine drive belt (See Drive Belt Removal & Installation in Section 02 Engine).
4. Remove the A/C compressor low-pressure line bolt (1) and high-pressure line bolt (2) from the A/C compressor. (Tighten: A/C compressor line bolts to 20 N·m)

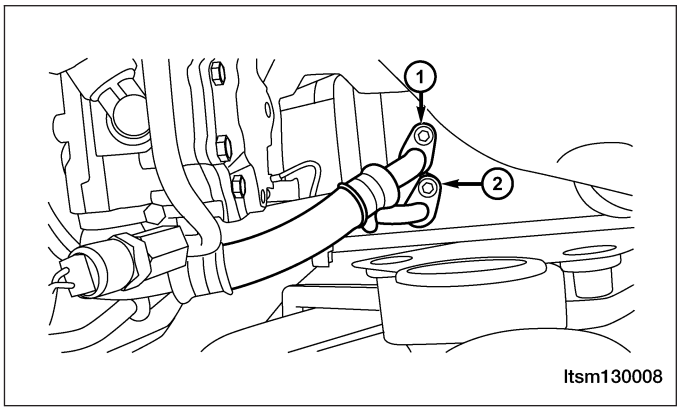

5. Remove the A/C compressor mounting bolts (1). (Tighten: A/C compressor bracket bolt to 40 N·m)

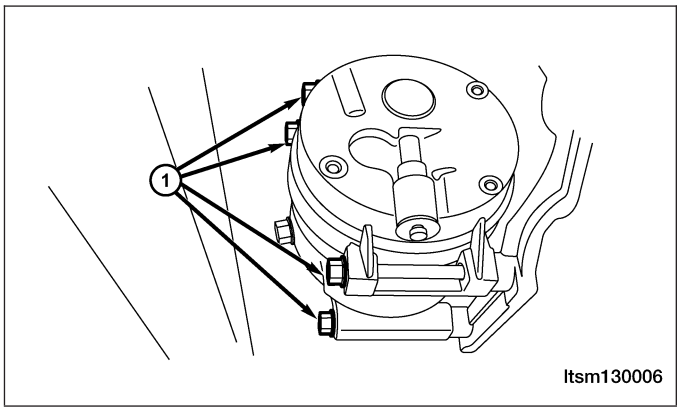

6. Carefully remove the A/C compressor assembly.
7. Installation is in the reverse order of removal.

Installation Notes:

- Lubricate new rubber O-ring seals with clean refrigerant oil and install them and new gaskets onto the refrigerant line fittings.
- Use only the specified O-rings as they are made of a special material for the R-134a system.

Downloaded from www.Manualslib.com manuals search engine

- Use only refrigerant oil of the type recommended for the A/C compressor in the vehicle.
- Recharge the A/C system (See A/C System Evacuation and Recharge in Section 13 Heating & Air Conditioning).

Evaporator

Description

The evaporator core is located in the HVAC housing, under the instrument panel. The evaporator coil is positioned in the HVAC housing so that all air that enters the housing must pass over the fins of the evaporator before it is distributed through the system ducts and outlets. However, air passing over the evaporator core fins will only be conditioned when the compressor is engaged and circulating refrigerant through the evaporator coil tubes.

Operation

Refrigerant enters the evaporator from the orifice tube as a low-temperature, low-pressure liquid. As air flows over the fins of the evaporator, the humidity in the air condenses on the fins, and the heat from the air is absorbed by the refrigerant. Heat absorption causes the refrigerant to boil and vaporize. The refrigerant becomes a low-pressure gas before it leaves the evaporator. The evaporator core housing directs airflow from the blower motor through the evaporator core and heater core. All airflow from the blower motor passes through the evaporator core. The airflow is then directed through or around the heater core by the temperature blend door(s).

Removal & Installation

1. Evacuate the A/C system (See A/C System Evacuation and Recharge in Section 13 Heating & Air Conditioning).
2. Remove the expansion valve.
3. Remove the HVAC housing (See HVAC Housing Removal and Installation in Section 13 Heating & Air Conditioning).
4. Remove the retaining bolts and screws.
5. Remove the evaporator core.
6. Installation is in the reverse order of removal.

Installation Notes:

- Lubricate new rubber O-ring seals with clean refrigerant oil and install them and new gaskets onto the refrigerant line fittings.
- Use only the specified O-rings as they are made of a special material for the R-134a system.
- Use only refrigerant oil of the type recommended for the A/C compressor in the vehicle.
- Recharge the A/C system (See A/C System Evacuation and Recharge in Section 13 Heating & Air Conditioning).

Condenser

Description

The condenser is located in the air flow in front of the engine cooling radiator. The condenser transforms the refrigerant from a gas into a liquid. It is attached to the vehicle with bolts and the A/C lines with fittings.

Operation

When the heat is removed from the refrigerant, it condenses. When the refrigerant leaves the condenser, it becomes a high-pressure liquid refrigerant. The volume of air flowing over the condenser fins is critical to the proper cooling performance of the air conditioning system. Therefore, it is important that there are no objects placed in front of the radiator grille openings in the front of the vehicle or foreign material on the condenser fins that might obstruct proper air flow. Also, any factory-installed air seals or shrouds must be properly reinstalled following radiator or condenser service.

Downloaded from www.Manualslib.com manuals search engine

Removal & Installation

1. Disconnect the negative battery cable.
2. Evacuate the A/C system (See A/C System Evacuation and Recharge in Section 13 Heating & Air Conditioning).
3. Remove the front bumper (See Front Bumper Removal & Installation in Section 15 Body & Accessories).
4. Remove the nut (3) that secures the A/C high-pressure liquid line to the A/C condenser. Remove and discard the O-ring seal and gasket.

   NOTE: After removing the A/C lines, plug the A/C lines to prevent any debris from entering the A/C system.
5. Remove the nut (2) that secures the A/C high-pressure gas line to the A/C condenser. Remove and discard the O-ring seal and gasket.
6. Remove the condenser mounting bolts (1).

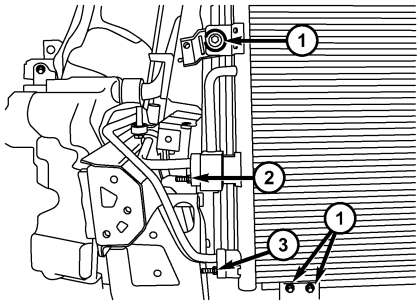

ltsm130005

7. Remove the condenser from the engine compartment.
8. Installation is in the reverse order of removal.

Installation Notes:

- Lubricate new rubber O-ring seals with clean refrigerant oil and install them and new gaskets onto the refrigerant line fittings.
- Use only the specified O-rings as they are made of a special material for the R-134a system.
- Use only refrigerant oil of the type recommended for the A/C compressor in the vehicle.
- Recharge the A/C system (See A/C System Evacuation and Recharge in Section 13 Heating & Air Conditioning).

Accumulator

Description

The accumulator is connected directly between the condenser and the expansion valve. Accumulator is used on systems that use an orifice tube to meter refrigerants into the evaporator.

Operation

The primary function of the accumulator is to isolate the compressor from any damaging liquid refrigerant. The accumulator removes debris and moisture from the air conditioning system.

Removal & Installation

1. Disconnect the negative battery cable.
2. Evacuate the A/C system (See A/C System Evacuation and Recharge in Section 13 Heating & Air Conditioning).

Downloaded from www.Manualslib.com manuals search engine

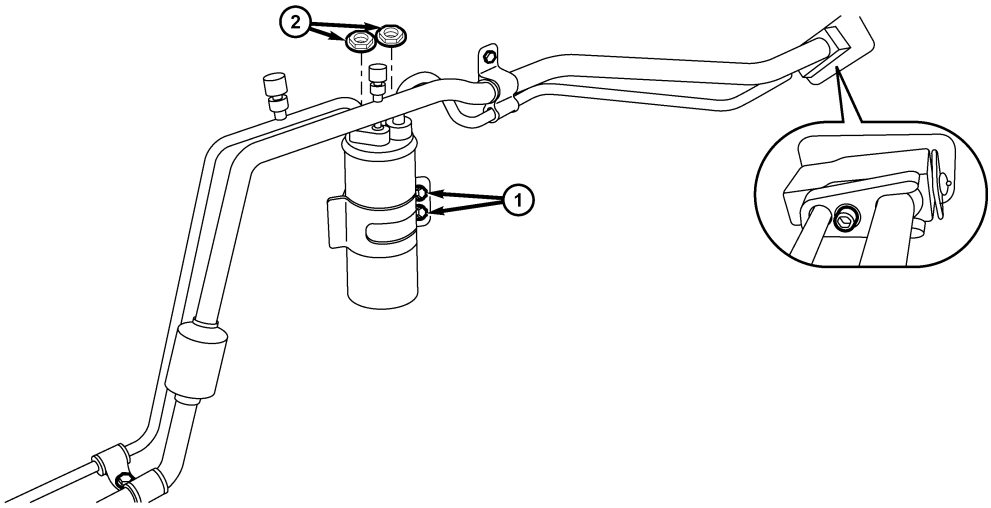

3. Remove the nuts (2) connecting the suction lines to the accumulator.
4. Remove the accumulator mounting bolts (1).
5. Remove the accumulator. Remove and discard the O-ring seals and gaskets.
   NOTE: After removing the A/C lines, plug the A/C lines to prevent any debris from entering the A/C system.
6. Installation is in the reverse order of removal.

Installation Notes:

- Lubricate new rubber O-ring seals with clean refrigerant oil and install them and new gaskets onto the refrigerant line fittings.
- Use only the specified O-rings as they are made of a special material for the R-134a system.
- Use only refrigerant oil of the type recommended for the A/C compressor in the vehicle.
- Recharge the A/C system (See A/C System Evacuation and Recharge in Section 13 Heating & Air Conditioning).

Liquid Line

Description

The A/C liquid line connects the A/C condenser to the A/C evaporator.

Operation

The high pressure A/C liquid line is the refrigerant line that carries refrigerant from the A/C condenser to the A/C accumulator. Air conditioning hoses are designed to control liquid and gas at high pressures and temperatures. The hoses are usually flexible and equipped with special metal fittings at the ends to prevent leaks and provide a sure seal and connection between components.

Removal & Installation

1. Disconnect the negative battery cable.
2. Evacuate the A/C system (See A/C System Evacuation and Recharge in Section 13 Heating & Air Conditioning).

Downloaded from www.Manualslib.com manuals search engine

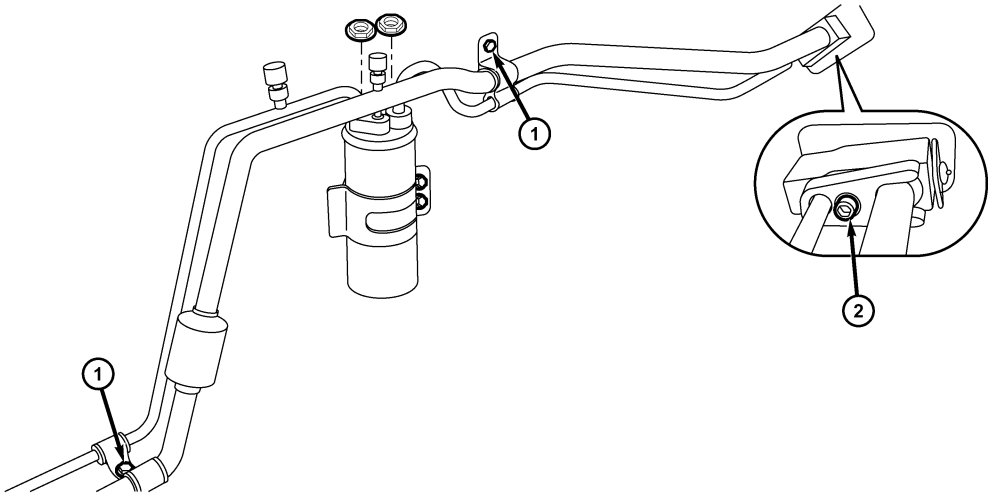

ltsm130007

3. Remove the bolt (2) that secures the A/C liquid and suction line assembly to the A/C expansion valve.
4. Remove the lines retaining bolts (1).
5. Remove the A/C liquid line assembly from the A/C evaporator to compressor and remove and discard the seals.
6. Install plugs in, or tape over the opened refrigerant line fittings and the evaporator ports.
7. Remove the A/C liquid line assembly from accumulator to condenser and from accumulator to evaporator.
8. Installation is in the reverse order of removal.

Installation Notes:

- Lubricate new rubber O-ring seals with clean refrigerant oil and install them and new gaskets onto the refrigerant line fittings.
- Use only the specified O-rings as they are made of a special material for the R-134a system.
- Use only refrigerant oil of the type recommended for the A/C compressor in the vehicle.
- Recharge the A/C system (See A/C System Evacuation and Recharge in Section 13 Heating & Air Conditioning).

Suction Line

Description

The A/C suction line connects the A/C compressor to the A/C accumulator.

Operation

The low pressure A/C suction line is the refrigerant line that carries refrigerant from the A/C accumulator to the A/C compressor. Air conditioning hoses are designed to control liquid and gas at high pressures and temperatures. The hoses are usually flexible and equipped with special metal fittings at the ends to prevent leaks and provide a sure seal and connection between components.

Removal & Installation

1. Disconnect the negative battery cable.
2. Evacuate the A/C system (See A/C System Evacuation and Recharge in Section 13 Heating & Air Conditioning).

Downloaded from www.Manualslib.com manuals search engine

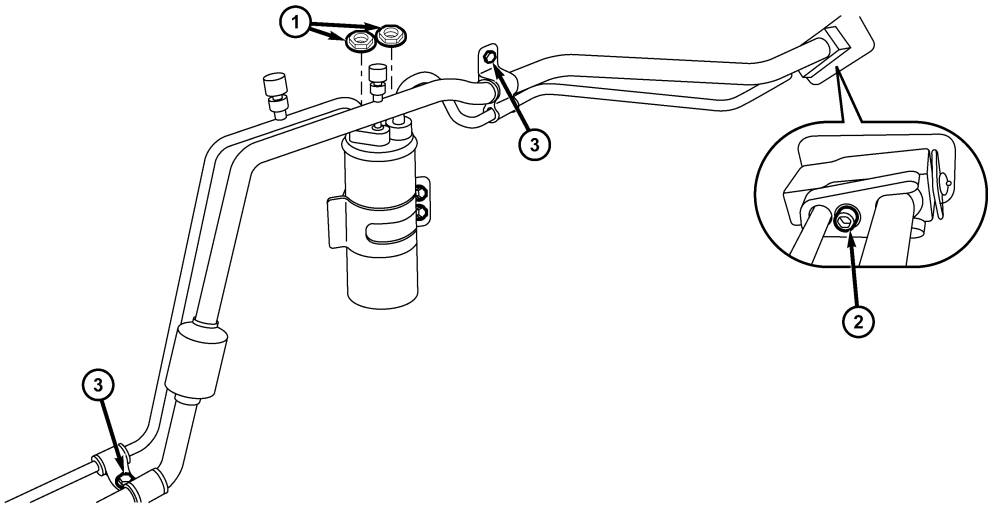

ltsm130016

3. Remove the bolt (2) that secures the A/C liquid and suction line assembly to the A/C expansion valve.
4. Remove the nuts (1) that connect the suction lines to the A/C accumulator.
5. Remove the lines retaining bolts (3).
6. Remove the nut (1) that connect the suction line to the A/C compressor.

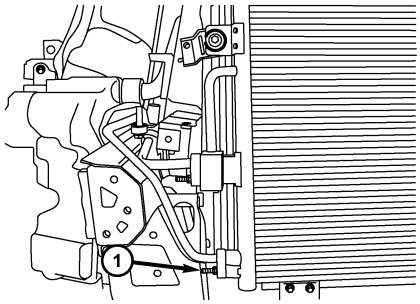

ltsm130015

7. Install plugs in, or tape over the opened refrigerant line fittings and the evaporator ports.
8. Remove the A/C suction line assembly from evaporator to compressor.
9. Installation is in the reverse order of removal.

Installation Notes:

- Lubricate new rubber O-ring seals with clean refrigerant oil and install them and new gaskets onto the refrigerant line fittings.
- Use only the specified O-rings as they are made of a special material for the R-134a system.
- Use only refrigerant oil of the type recommended for the A/C compressor in the vehicle.
- Recharge the A/C system (See A/C System Evacuation and Recharge in Section 13 Heating & Air Conditioning).

Downloaded from www.Manualslib.com manuals search engine

Heater Core

Description

The heater core is located in the HVAC housing. The heater core is a heat exchanger made of rows of tubes with fins and is positioned within the air distribution housing so that only the selected amount of air entering the housing passes through the heater core before it is distributed through the heating-A/C system ducts and outlets. One end of the heater core is fitted with a tank that includes the fittings for the heater core tubes. The heater core can only be serviced by removing the HVAC housing from the vehicle.

Operation

Engine coolant is circulated through the heater hoses to the heater core at all times. As the coolant flows through the heater core, heat is removed from the engine and is transferred to the heater core tubes and fins. Air directed through the heater core picks up the heat from the heater core fins. The blend-air door allows control of the heater output air temperature by regulating the amount of air flowing through the heater core. The blower motor speed controls the volume of air flowing through the HVAC housing.

Removal & Installation

1. Drain the cooling system (See Cooling System Draining Procedure in Section 06 Cooling System).
2. Evacuate the A/C system (See A/C System Evacuation and Recharge in Section 13 Heating & Air Conditioning).
3. Remove the HVAC housing assembly and place it on a workbench (See HVAC Housing Removal & Installation in Section 13 Heating & Air Conditioning).
4. Remove the retaining bolts and clamps.
5. Remove the heater core.
6. Installation is in the reverse order of removal.

Installation Notes:

- Verify the cooling system is filled to proper specifications.

Downloaded from www.Manualslib.com manuals search engine

RESTRAINTS
14

CONTENTS

page

Airbag System 14-1

Seat Belt System 14-50

AIRBAG SYSTEM

GENERAL INFORMATION 14-2
- Description 14-2
- Operation 14-2
- Specifications 14-2
- Special Tools 14-3
- Electrical Schematics 14-4
- Airbag Control Module Connector Pin-Out Table 14-7

DIAGNOSIS & TESTING 14-8
- Diagnostic Help 14-8
- Intermittent DTC Troubleshooting 14-8
- Ground Inspection 14-8
- Diagnostic Tools 14-8
- **Diagnostic Trouble Code (DTC) List** 14-9
  - Restraints Control Module DTC List 14-9
- **Diagnostic Trouble Code (DTC) Tests** 14-11
  - B1102 - Battery Voltage Low 14-11
  - B1346 - Driver Airbag Resistance Too High Or Open (1st Stage) 14-16
  - B1352 - Passenger Airbag Resistance Too High Or Open (1st Stage) 14-23
  - B2501 - Warning Lamp Fault-Open 14-29
  - B2503 - Warning Lamp Fault-Short To Ground 14-33
  - B2504 - Warning Lamp Fault-Short To Battery 14-37
  - B1620 - Internal Fault - Replace ECU 14-41

ON-VEHICLE SERVICE 14-46
- **Airbag System Disarming Procedure** 14-46
  - Description 14-46
- **Driver Side Airbag** 14-46
  - Removal & Installation 14-46
- **Front Passenger Side Airbag** 14-47
  - Removal & Installation 14-47
- **Restraints Control Module (RCM)** 14-49
  - Removal & Installation 14-49

Downloaded from www.Manualslib.com manuals search engine

GENERAL INFORMATION

Description

Available occupant restraints for this vehicle include both active and passive types. Active restraints are those which require the vehicle occupants to take some action to employ, such as fastening a seat belt; while passive restraints require no action by the vehicle occupants to be employed.

Active Restraints

- Front Seat Belts
- Rear Seat Belts

Passive Restraints

- Driver Airbag
- Passenger Airbag
- Seat Belt Tensioners

Operation

Active Restraints

The primary passenger restraints are the seat belts. Seat belts are referred to as an active restraint because the vehicle occupants are required to physically fasten and properly adjust these restraints in order to benefit from them.

Passive Restraints

The passive restraints are referred to as a supplemental restraint system because they were designed and are intended to enhance the protection for the occupants of the vehicle only when used in conjunction with the seat belts. They are referred to as passive restraints because the vehicle occupants are not required to do anything to make them operate; however, the vehicle occupants must be wearing their seat belts in order to obtain the maximum safety benefit from the supplemental restraint system.

The supplemental restraint system electrical circuits are continuously monitored and controlled by a microprocessor and software contained within the Restraints Control Module (RCM). An airbag indicator in the instrument cluster illuminates for about seven seconds as a bulb test each time the ignition switch is turned to the ON or START positions. Following the bulb test, the airbag indicator is turned ON or OFF by the RCM to indicate the status of the supplemental restraint system. If the airbag indicator comes ON at any time other than during the bulb test, it indicates that there is a problem in the supplemental restraint system electrical circuits. Such a problem may cause airbags not to deploy when required, or to deploy when not required.

Deployment of the supplemental restraints depends upon the angle and severity of an impact. When an impact is severe enough, the microprocessor in the RCM signals the inflator of the appropriate airbag units to deploy their airbag cushions. The front seat belt tensioners are provided with a deployment signal by the RCM in conjunction with the front airbags.

Specifications

Torque Specifications

DESCRIPTION	TORQUE (N·m)
Driver Side Airbag Retaining Bolts	10
Restraints Control Module Retaining Bolts	7-9
Front Passenger Side Airbag Retaining Bolts	10

Downloaded from www.Manualslib.com manuals search engine

Special Tools

Diagnostic Scan Tool X-431	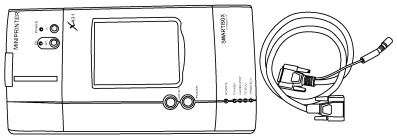 besm030001
Digital Multimeter Fluke 15B & 17B	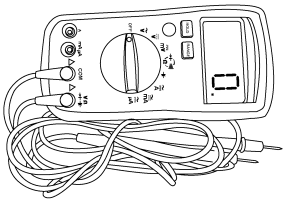 besm030002
General Airbag Special Load Tool - Resistor Harness (For Driver's and Passenger's (Front) Airbag)	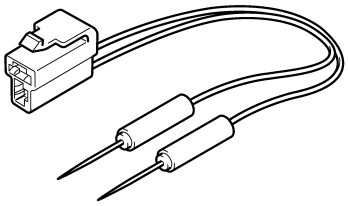 ltsmd140011
General Airbag Special Load Tool - Dummy Resistor	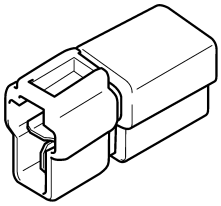 ltsmd140010

Downloaded from www.Manualslib.com manuals search engine

Electrical Schematics

Airbag Control System (Page 1 of 3)

RESTRAINTS SYSTEM

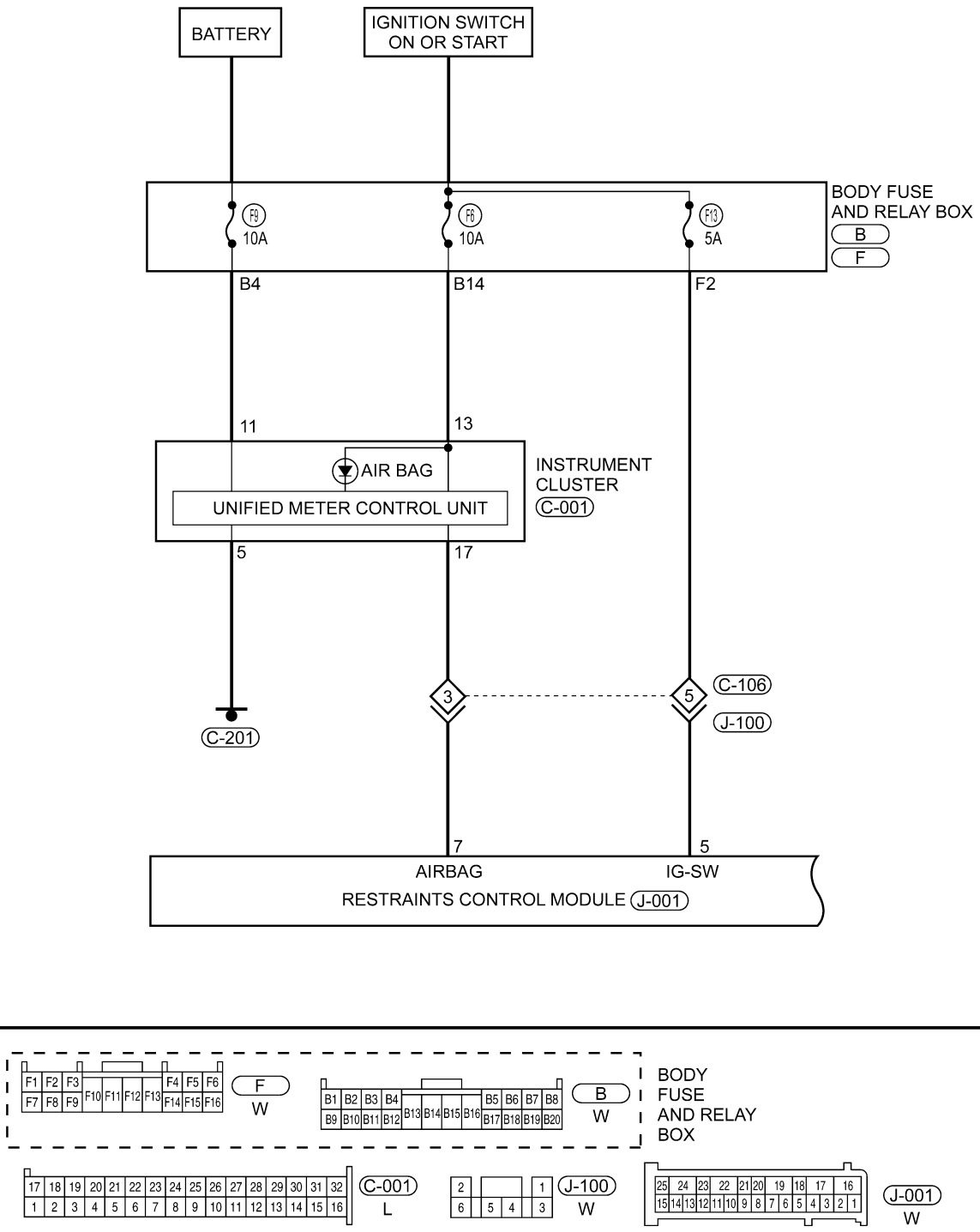

ltsmw140011t

Downloaded from www.Manualslib.com manuals search engine

Airbag Control System (Page 2 of 3)

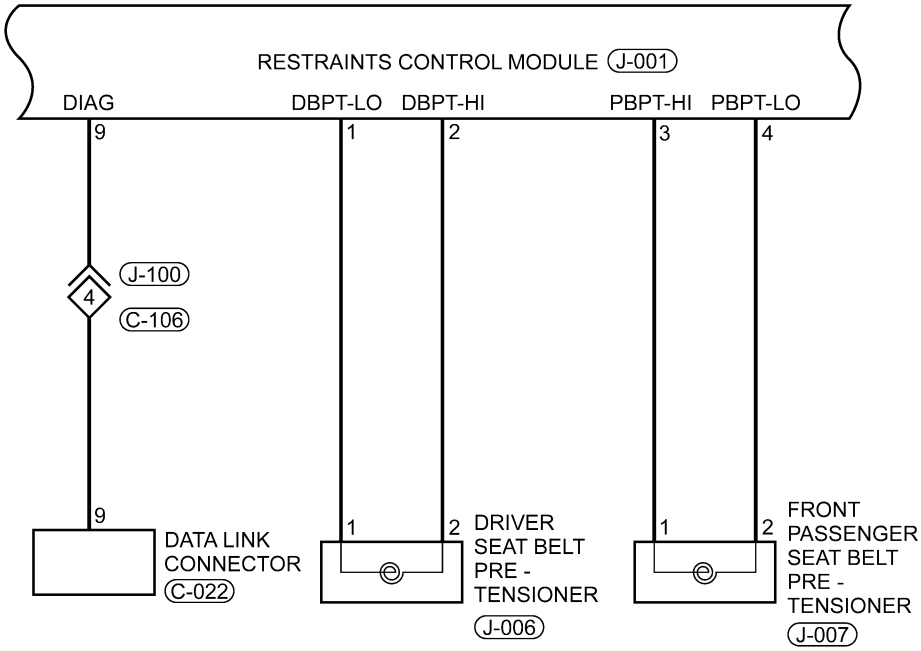

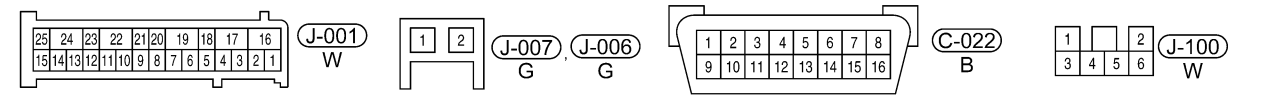

ltsmw140009t

Downloaded from www.Manualslib.com manuals search engine

Airbag Control System (Page 3 of 3)

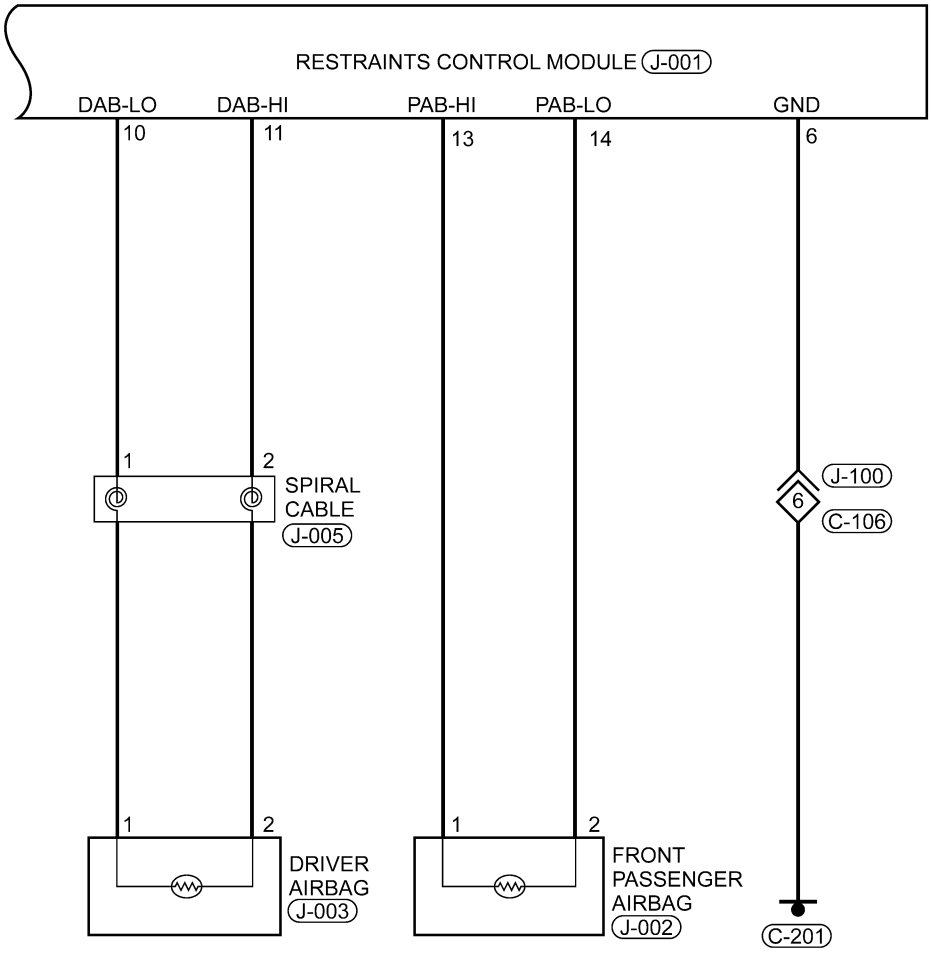

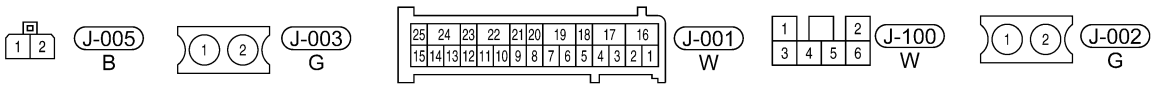

ltsmw140010t

Downloaded from www.Manualslib.com manuals search engine

Airbag Control Module Connector Pin-Out Table

PIN	CIRCUIT IDENTIFICATION	PIN	CIRCUIT IDENTIFICATION
1	Driver Seatbelt Pre-tensioner Lo	14	Front Passenger Airbag Lo
2	Driver Seatbelt Pre-tensioner Hi	15	-
3	Front Passenger Seatbelt Pre-tensioner Hi	16	-
4	Front Passenger Seatbelt Pre-tensioner Lo	17	-
5	Ignition Switch	18	-
6	GND	19	-
7	Airbag Lamp	20	-
8	-	21	-
9	Diagnostic Link K	22	-
10	Driver Airbag Lo	23	-
11	Driver Airbag Hi	24	-
12	-	25	-
13	Front Passenger Airbag Hi		

Downloaded from www.Manualslib.com manuals search engine

DIAGNOSIS & TESTING

Diagnostic Help

1. The X-431 scan tool connects to the Data Link Connector (DLC) and communicates with the vehicle electronic modules through the data network.
2. Confirm that the malfunction is current and carry-out the diagnostic tests and repair procedures.
3. If the DTC cannot be deleted, it is a current fault.
4. Use a digital multimeter to perform voltage readings on electronic systems.
5. Refer to any Technical Bulletins that may apply to the failure.
6. Visually inspect the related wiring harness.
7. Inspect and clean all Restraints Control Module (RCM) grounds that are related to DTC.
8. If numerous trouble codes were set, use a wiring schematic and look for any common ground circuits or voltage supply circuits that may apply to the DTC.

Intermittent DTC Troubleshooting

If the failure is intermittent perform the following:

- Check for loose connectors.
- Look for any chafed, pierced, pinched, or partially broken wires.
- Monitor the scan tool data relative to this circuit.
- Wiggle the related wiring harness and connectors while looking for an interrupted signal on the affected circuit.
- If possible, try to duplicate the conditions under which the DTC set.
- Look for the data to change or for the DTC to reset during the wiggle test.
- Look for broken, bent, pushed out or corroded terminals.
- Inspect the sensor and mounting area for any condition that would result in an incorrect signal, such as damage, foreign material.
- A data recorder, and/or oscilloscope should be used to help diagnose intermittent conditions.
- Remove the Restraints Control Module (RCM) from the troubled vehicle and install in a new vehicle and test. If the DTC cannot be deleted, the RCM is malfunctioning. If the DTC can be deleted, return the RCM to the original vehicle.

Ground Inspection

Ground connections are very important to the proper operation of electrical and electronic circuits. Ground connections are often exposed to moisture, dirt and other corrosive elements. The corrosion (rust) can become an unwanted resistance. This added resistance can alter the way a circuit works.

Electronically controlled circuits are very sensitive to proper grounding. A loose or corroded ground can drastically affect an electronically controlled circuit. A poor or corroded ground can affect the circuit. Perform the following when inspecting a ground connection:

1. Remove the ground bolt or screw.
2. Inspect all mating surface for tarnish, dirt, rust, etc.
3. Clean as required to assure good contact.
4. Reinstall bolt or screw securely.
5. Inspect for ″add-on″ accessories which may be interfering with the ground circuit.
6. If several wires are crimped into one ground eyelet terminal, check for proper crimps. Make sure all of the wires are clean, securely fastened and providing a good ground path. If multiple wires are crimped to one eyelet, make sure no excess wire insulation has been crimped creating a bad ground.

Diagnostic Tools

Diagnostic Scan Tool X-431

Read the following when connecting the X-431 scan tool:

- Connect the scan tool to the Data Link Connector (DLC) for communication with the vehicle.
- The DLC is located on the driver side compartment under the steering column (it is attached to the instrument panel and accessible from the driver seat).
- The DLC is rectangular in design and capable of accommodating up to 16 terminals.
- The electrical connector has keying features to allow easy connection.

Downloaded from www.Manualslib.com manuals search engine

Airbag Special Load Tool

Use the airbag special load tools to diagnose airbag system faults:
- The airbag special load tools simulates airbag system components.

NOTE :
Using the airbag special load tools will help prevent other airbag DTCs from being set while troubleshooting the system.

Digital Multimeter

Read the following when using the digital multimeter:
- Troubleshoot electrical problems and wiring systems.
- Use a multimeter for basic fault finding and bench testing.
- Use a multimeter to measure voltage, current and resistance.

Diagnostic Trouble Code (DTC) List

Restraints Control Module DTC List

DTC	DTC DEFINITION
B1101	Battery Voltage High
B1102	Battery Voltage Low
B1345	Driver Airbag Open
B1346	Driver Airbag Resistance Too High (1st Stage)
B1347	Driver Airbag Resistance Too Low (1st Stage)
B1348	Driver Airbag Resistance Circuit Short To Ground (1st Stage)
B1349	Driver Airbag Resistance Circuit Short To Battery (1st Stage)
B1351	Passenger Airbag Open
B1352	Passenger Airbag Resistance Too High (1st Stage)
B1353	Passenger Airbag Resistance Too Low (1st Stage)
B1354	Passenger Airbag Resistance Circuit Short To Ground (1st Stage)
B1355	Passenger Airbag Resistance Circuit Short To Battery (1st Stage)
B1360	Pretensioner Front-Driver Open
B1361	Pretensioner Front-Driver Resistance Too High
B1362	Pretensioner Front-Driver Resistance Too Low
B1363	Pretensioner Front-Driver Resistance Circuit Short To Ground
B1364	Pretensioner Front-Driver Resistance Circuit Short To Battery
B1366	Pretensioner Front-Passenger Open
B1367	Pretensioner Front-Passenger Resistance Too High
B1368	Pretensioner Front-Passenger Resistance Too Low
B1369	Pretensioner Front-Passenger Resistance Circuit Short To Ground
B1370	Pretensioner Front-Passenger Resistance Circuit Short To Battery
B1406	PPD Front-Passenger Defect
B1407	PPD Front-Passenger Communication Error
B1462	Front PPD Open
B1511	Buckle Switch Driver Open Or Short To Battery
B1512	Buckle Switch Driver Short Or Short To Ground
B1513	Buckle Switch Passenger Open Or Short To Battery
B1514	Buckle Switch Passenger Short Or Short To Ground

Downloaded from www.Manualslib.com manuals search engine

DTC	DTC DEFINITION
B1515	Buckle Switch Driver Defect
B1516	Buckle Switch Passenger Defect
B1527	Passenger Airbag Deactivation Switch Open Or Short To Battery
B1528	Passenger Airbag Deactivation Switch Short Or Short To Ground
B1529	Passenger Airbag Deactivation Switch Defect
B1650	Crash Record In 1st Stage Only (Frontal - Replace ECU)
B1657	Crash Record In Belt Pretensioner Only
B1658	Belt Pretensioner 6 Times Deployment
B1620	Internal Fault - Replace ECU
B2501	Warning Lamp Fault - Open
B2503	Warning Lamp Fault - Short To Ground
B2504	Warning Lamp Fault - Short To Battery
B2505	Passenger Airbag Off Warning Lamp Failure

Downloaded from www.Manualslib.com manuals search engine

Diagnostic Trouble Code (DTC) Tests

B1102 - Battery Voltage Low

SRC - PWR - 01

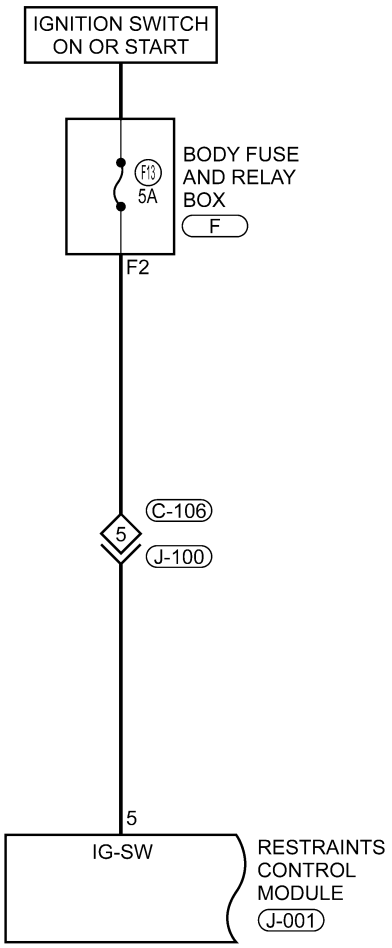

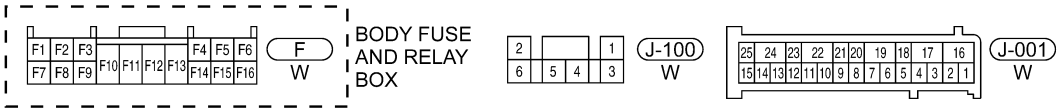

ltsmw140002t

Downloaded from www.Manualslib.com manuals search engine

SRC - PWR - 02

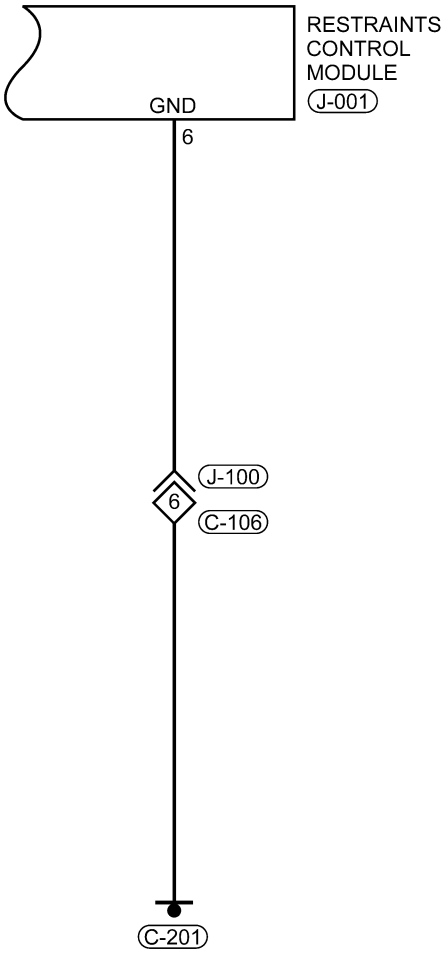

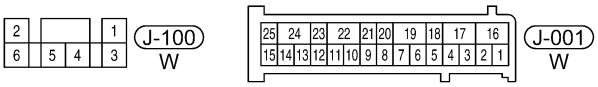

ltsmw140003t

Downloaded from www.Manualslib.com manuals search engine

NOTE :
The Restraints Control Module (RCM) ground pin must be connected to the vehicle chassis in the immediate location of the RCM mounting area.

On Board Diagnostic Logic

- Self-diagnosis detection logic.

DTC NO.	DTC DEFINITION	DTC DETECTION CONDITION	DTC SET CONDITION	POSSIBLE CAUSE
B1102	Battery Voltage Low	Ignition switch: ON	Restraints Control Module (RCM) detected that the battery voltage is excessively low.	• Battery • Charge system • Harness is open or shorted • RCM

DTC Confirmation Procedure:

Before performing the following procedure, confirm that battery voltage is more than 12 V.
- Turn ignition switch off.
- Connect the X-431 scan tool to the Data Link Connector (DLC) - use the latest software available.
- Turn ignition switch on.
- With the scan tool, record and erase stored DTCs in the RCM.
- Turn ignition switch off and wait for a few seconds.
- Turn ignition switch on then select view DTC.
- If the DTC is detected, the DTC condition is current. Go to Diagnostic Procedure - Step 1.
- If the DTC is not detected, the DTC condition is intermittent (See Diagnostic Help and Intermittent DTC Troubleshooting in Section 14 Restraints for more information).

Diagnostic Guide Lines

Observe the following guide lines while diagnosing this DTC:
- Troubleshoot any Engine Control Module (ECM) charging/cranking DTCs before proceeding.
- If the warning lamp goes out immediately after the warning lamp flashed for 6 - 7 seconds, this indicates that the system is OK.
- If the warning lamp is on for 6 - 7 seconds continuously, then goes out, or the warning lamp is on continuously, this indicates that there are history DTCs in the system. Use the Scan Tool to erase the DTCs.
- If any other condition occurs, use the Scan Tool to erase the history DTCs first, then check the warning lamp. If the warning lamp does not go out immediately after the warning lamp flashes for 6 - 7 seconds when using the Scan Tool, erase the history DTCs first.
- In the course of troubleshooting the airbag system, make sure the system power supply is shut off, and wait two minutes for the system capacitor to discharge.
- The squib circuit connectors integrate a ″shorting″ spring (which prevents the airbag from deploying unintentionally due to static electricity by shorting the positive wire to the negative wire in the squib circuit when the connectors are disconnected). Therefore, if the airbag electrical connector or spiral cable electrical connector is damaged or improperly connected, the shorting spring may not be released when the electrical connector is connected.
- The following tools are required to perform the DTC diagnostic procedure:
  - X-431 Scan Tool
  - Airbag Special Load Tool
  - Digital Multimeter

NOTE :
While performing electrical diagnosis & testing, always refer to the electrical schematics for specific circuit and component information.

Downloaded from www.Manualslib.com manuals search engine

Diagnostic Procedure

1. CHECK GROUND CONNECTION

- Turn ignition switch off.
- Disconnect the negative battery cable.
- Loosen and retighten ground screws on the body (See Ground Inspection in Section 14 Restraints for more information).
- Inspect the ground connection C-201 mounting position (See Vehicle Wiring Harness Layout - Main Harness in Section 16 Wiring).

Is the ground connection OK?

Yes >> Go to the next step.

No >> Repair or replace ground connection.

2. CHECK RESTRAINTS CONTROL MODULE (RCM) ELECTRICAL CONNECTOR

- Disconnect the Restraints Control Module (RCM) electrical connector (1).
- Inspect the electrical connector for damage.

Is the electrical connector OK?

Yes >> Go to the next step.

No >> Repair or replace the electrical connector as necessary.

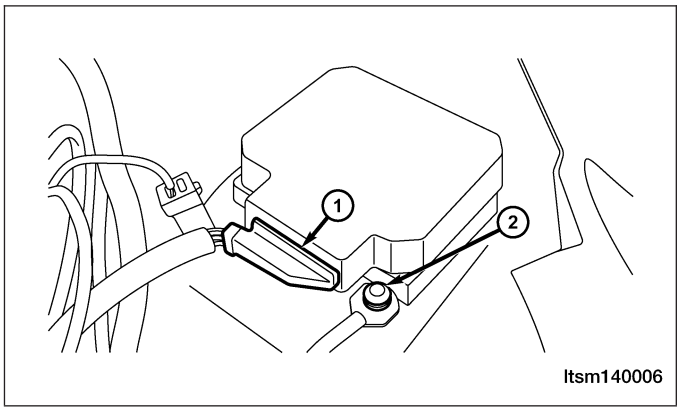

3. CHECK RESTRAINTS CONTROL MODULE (RCM) POWER SUPPLY

- Turn ignition switch on.
- Check RCM power supply between terminal 5 and terminal 6 in the RCM electrical connector J-001 terminal side.

Is the voltage less than 9 V?

Yes >> Go to step 4.

No >> Replace the RCM.

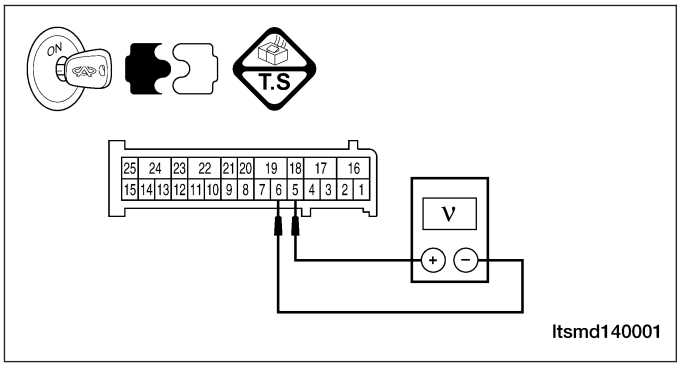

Downloaded from www.Manualslib.com manuals search engine

4. CHECK SYSTEM VOLTAGE

- Start the engine, raise the engine speed over 1000 RPM.
- Measure the charging voltage with a voltmeter at the battery positive and negative terminals.

Is the voltage less than 9 V?

Yes >> Inspect the charging system.

No >> Go to the next step.

5. CHECK THE BATTERY

- Start the engine, raise the engine speed over 1000 RPM for a few minutes.
- Turn ignition switch off.
- Measure the voltage drop with a voltmeter at the battery positive and negative terminals while cranking the engine.
- Battery voltage should be more than approximate 9.0 V.

Is the check result normal?

Yes >> Go to step 6.

No >> Charge or replace the battery.

6. CHECK RESTRAINTS CONTROL MODULE (RCM) SUPPLY CIRCUIT

- Measure the resistance between RCM terminal 5 and the battery negative connector.
- Continuity should exist.

Is the check result normal?

Yes >> Go to the next step.

No >> Check fuse.
Inspect and replace the harness for an open.
Check harness connector C-106, J-100.
Check correlative components.

7. CHECK DTC

- With the X-431 scan tool, read RCM DTCs.
- Refer to ″DTC Confirmation Procedure″.

Is DTC B1102 still present?

Yes >> Replace the RCM.

No >> The system is now operating properly.
Reassemble the vehicle and road test to verify the customers complaint is repaired.

Downloaded from www.Manualslib.com manuals search engine

B1346 - Driver Airbag Resistance Too High Or Open (1st Stage)

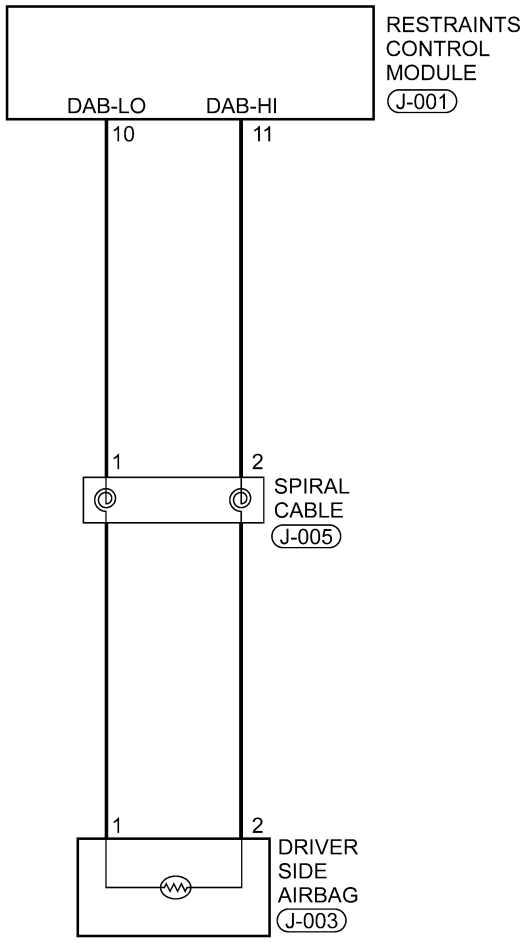

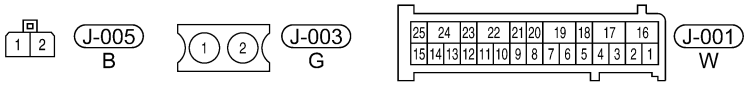

ltsmw140006t

Downloaded from www.Manualslib.com manuals search engine

NOTE :
The Restraints Control Module (RCM) ground pin must be connected to the vehicle chassis in the immediate location of the RCM mounting area.

WARNING!

After installing the Restraints Control Module (RCM), make sure all of the connectors are firmly connected, and the harness is routed properly. The resistance between the RCM housing and the vehicle body should be less than 100 mΩ.

On Board Diagnostic Logic

- Self-diagnosis detection logic.

DTC NO.	DTC DEFINITION	DTC DETECTION CONDITION	DTC SET CONDITION	POSSIBLE CAUSE
B1346	Driver Airbag Resistance Too High or Open (1st stage)	Ignition switch: ON	Restraints Control Module (RCM) detected that the resistance of RCM connector terminals is out of the specification range.	• Driver airbag module • Spiral cable • Driver airbag module connector • Harness is open between spiral cable and RCM • RCM

FIRING LOOP RESISTANCE FOR DRIVER FRONT AIRBAG			
COMPONENT	MIN.	NOMINAL	MAX.
Squib (Rs)	1.8 Ω	2.0 Ω	2.2 Ω
Contact Coil (Rc)	0.232 Ω	0.29 Ω	0.348 Ω
Wiring Harness (Rw)	0 Ω	0 Ω	0.2 Ω
Connector Terminals (Rt)	0 Ω	0 Ω	0.05 Ω
Total Resistance	2.032 Ω	2.29 Ω	2.798 Ω

FIRING LOOP FOR DRIVER FRONT AIRBAG

DESCRIPTION
1: Rw - Wiring harness resistance
2: Rc - Contact coil resistance
3: Rs + Rt - Squib resistance + terminal resistance
4: Squib for Driver - side front airbag inflator
5: Contact coil
6: Wiring harness
7: HAE 3.5
R(DAB) = Rs + Rt + Rw + Rc

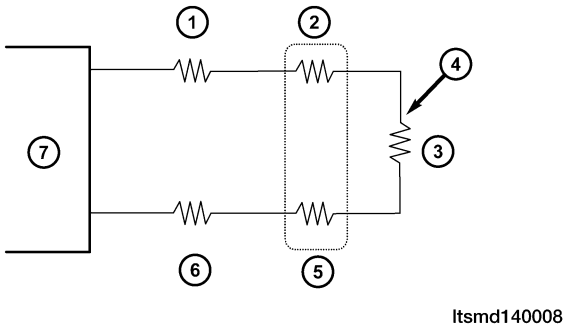

14

Downloaded from www.Manualslib.com manuals search engine

TEST FOR DRIVER FRONT AIRBAG FIRING LOOP DIAGNOSIS		
RESISTANCE RANGE	DESCRIPTION	FAULT INDICATION
R(DAB) < 1.06 Ω	Resistance too low or short	Fault definitely detected
1.80 Ω ≤ R(DAB) < 4.84 Ω	Normal	No fault
7.28 Ω ≤ R(DAB)	Resistance too high	Fault definitely detected
1.06 Ω < R(DAB) < 1.80 Ω 4.84 Ω < R(DAB) < 7.28 Ω	Tolerance	Fault may or may not be detected

DTC Confirmation Procedure:

Before performing the following procedure, confirm that battery voltage is more than 12 V.
- Turn ignition switch off.
- Connect the X-431 scan tool to the Data Link Connector (DLC) - use the latest software available.
- Turn ignition switch on.
- With the scan tool, record and erase stored DTCs in the RCM.
- Turn ignition switch off and wait for a few seconds.
- Turn ignition switch on then select view DTC.
- If the DTC is detected, the DTC condition is current. Go to Diagnostic Procedure - Step 1.
- If the DTC is not detected, the DTC condition is intermittent (See Diagnostic Help and Intermittent DTC Troubleshooting in Section 14 Restraints for more information).

Diagnostic Guide Lines

Observe the following guide lines while diagnosing this DTC:
- Troubleshoot any Engine Control Module (ECM) charging/cranking DTCs before proceeding.
- If the warning lamp goes out immediately after the warning lamp flashed for 6 - 7 seconds, this indicates that the system is OK.
- If the warning lamp is on for 6 - 7 seconds continuously, then goes out, or the warning lamp is on continuously, this indicates that there are history DTCs in the system. Use the Scan Tool to erase the DTCs.
- If any other condition occurs, use the Scan Tool to erase the history DTCs first, then check the warning lamp. If the warning lamp does not go out immediately after the warning lamp flashes for 6 - 7 seconds when using the Scan Tool, erase the history DTCs first.
- In the course of troubleshooting the airbag system, make sure the system power supply is shut off, and wait two minutes for the system capacitor to discharge.
- The squib circuit connectors integrate a ″shorting″ spring (which prevents the airbag from deploying unintentionally due to static electricity by shorting the positive wire to the negative wire in the squib circuit when the connectors are disconnected). Therefore, if the airbag electrical connector or spiral cable electrical connector is damaged or improperly connected, the shorting spring may not be released when the electrical connector is connected.
- The following tools are required to perform the DTC diagnostic procedure:
  - X-431 Scan Tool
  - Airbag Special Load Tool
  - Digital Multimeter

NOTE :
While performing electrical diagnosis & testing, always refer to the electrical schematics for specific circuit and component information.

Downloaded from www.Manualslib.com manuals search engine

Diagnostic Procedure

1. CHECK RCM DTC

- Perform the DTC confirmation procedure.

Is DTC B1346 present?

Yes >> Go to the next step.

No >> Go to Step 6.

2. CHECK DRIVER AIRBAG MODULE

- Turn ignition switch off.
- Disconnect the negative battery cable.

WARNING!

To avoid serious or fatal injury, turn ignition switch off, disconnect the negative battery cable and wait two minutes before proceeding.

- Disconnect the driver airbag module electrical connector J-003.

NOTE :
Check connectors - Clean and repair as necessary.

- Connect the airbag special load tool to the spiral cable side of the vehicle harness (connect the special tool resistor (2 ohms) in place of the passenger airbag module).

WARNING!

To avoid serious or fatal injury, the driver airbag module should not be checked with a multimeter.

NOTE :
If the airbag special load tool is not available, connect a known good driver airbag module.

- Connect the negative battery cable.

WARNING!

To avoid serious or fatal injury, reconnect the battery, then turn ignition switch on.

- Turn ignition switch on.
- With the scan tool, erase the DTC in the RCM.
- Turn ignition switch off, and wait a few seconds, then turn ignition switch on.
- With the scan tool, read the RCM DTCs

Is DTC B1346 present?

Yes >> Go to the next step.

No >> Replace the driver airbag module (See Driver Airbag Module Removal & Installation in Section 14 Restraints).
Reassemble the vehicle and road test to verify the customers complaint is repaired.

3. CHECK DRIVER AIRBAG MODULE CONTROL CIRCUITS

WARNING!

To avoid serious or fatal injury, turn the ignition switch off, disconnect the negative battery cable and wait two minutes before proceeding.

Downloaded from www.Manualslib.com manuals search engine

- Disconnect the airbag special load tool.
- Disconnect the RCM connector J-001 (1) (See Restraints Control Module (RCM) Removal & Installation in Section 14 Restraints).
- Disconnect the spiral cable electrical connector J-005.

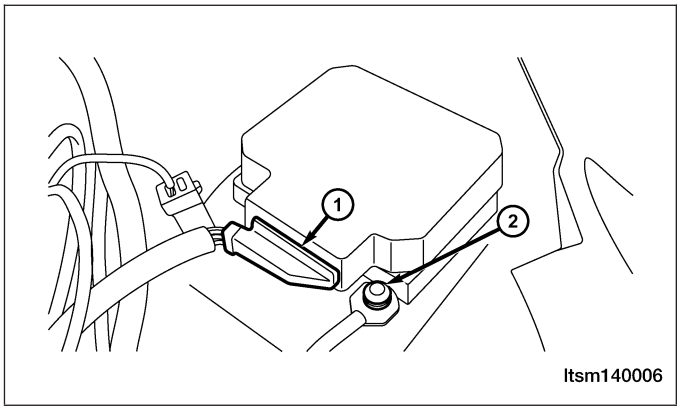

NOTE :
Check connectors - Clean and repair as necessary.

- Check the harness for continuity of the driver airbag circuit between terminal 10 in the RCM electrical connector J-001 terminal side and terminal 1 in the spiral cable electrical connector J-005 terminal side.
- Continuity should exist.

CHECK CONTINUITY			
SPIRAL CABLE TERMINAL	**RCM TERMINAL**	**CONTINUITY**	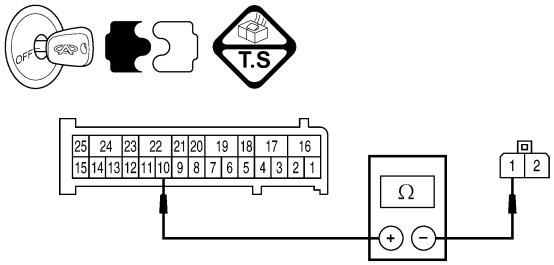
1	10	Yes	

- Check the harness for continuity of the driver airbag circuit between terminal 11 in the RCM electrical connector J-001 and terminal 2 in the spiral cable electrical connector J-005 terminal side.
- Continuity should exist.

CHECK CONTINUITY			
SPIRAL CABLE TERMINAL	**RCM TERMINAL**	**CONTINUITY**	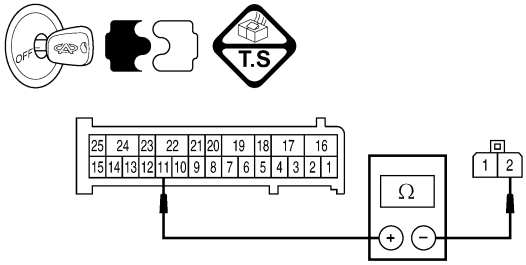
2	11	Yes	

- The resistance should be less than 0.2 Ω.

Is the check result normal?

Yes >> Go to the next step.

No >> Replace the cable.

Downloaded from www.Manualslib.com manuals search engine

4. CHECK DRIVER AIRBAG MODULE CONTROL CIRCUITS

WARNING!

To avoid serious or fatal injury, turn the ignition switch off, disconnect the negative battery cable and wait two minutes before proceeding.

- Disconnect the driver airbag module connectors.

NOTE :
Check connectors - Clean and repair as necessary.
- Check the harness for continuity of the driver airbag circuit between terminal 1 in the driver airbag module electrical connector J-003 and terminal 1 in the spiral cable electrical connector J-005 terminal side.
- Continuity should exist.

CHECK CONTINUITY			
SPIRAL CABLE TERMINAL	DRIVER AIRBAG MODULE TERMINAL	CONTINUITY	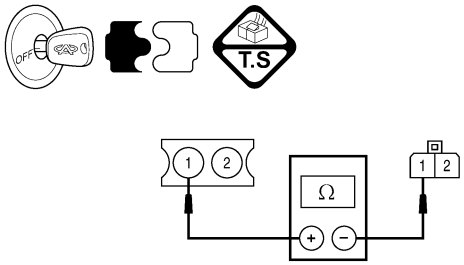
1	1	Yes	ltsmd140004

- Check the harness for continuity of the driver airbag circuit between the driver airbag module electrical connector terminal 2 and the spiral cable electrical connector terminal 2.
- Continuity should exist.

CHECK CONTINUITY			
SPIRAL CABLE TERMINAL	DRIVER AIRBAG MODULE TERMINAL	CONTINUITY	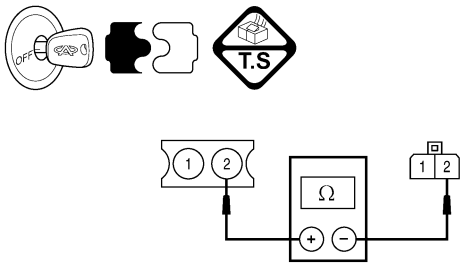
2	2	Yes	ltsmd140005

Is the check result normal?

Yes >> Go to the next step.

No >> Replace the spiral cable.

Downloaded from www.Manualslib.com manuals search engine

5. CHECK CONNECTORS

NOTE :
Diagnose and repair all active codes before diagnosing stored codes (See Restraints Control Module DTC List in Section 14 Restraints).

- With the scan tool, record and erase all RCM DTCs.
- Using the electrical schematic as a guide, inspect the following:
  - Inspect the wiring and connectors of the related airbag system.
  - Look for any chafed, pierced, pinched, or partially broken wires.
  - Look for broken, bent, pushed out or corroded terminals.
  - Verify that there is good pin to terminal contact in the related connectors.

Were any problems found?

Yes >> Repair as necessary.

No >> Go to the next step.

6. CHECK DTC

- Reconnect all disconnected components and harness connectors.
- With the X-431 scan tool, read RCM DTCs.
- Refer to ″DTC Confirmation Procedure″.

Is DTC B1346 still present?

Yes >> Replace the RCM.

No >> The system is now operating properly.
Reassemble the vehicle and road test to verify the customers complaint is repaired.

Downloaded from www.Manualslib.com manuals search engine

B1352 - Passenger Airbag Resistance Too High Or Open (1st Stage)

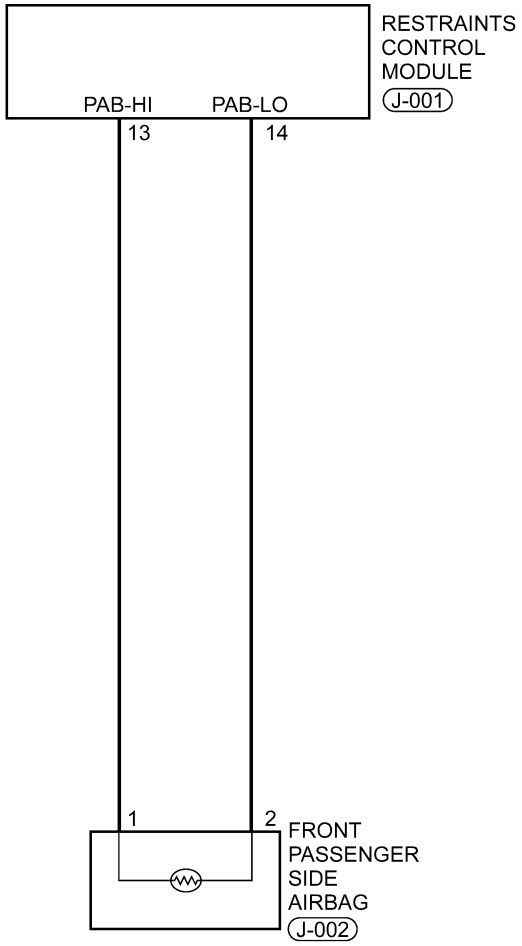

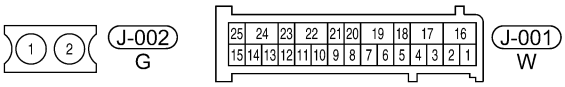

ltsmw140007t

Downloaded from www.Manualslib.com manuals search engine

NOTE :
The Restraints Control Module (RCM) ground pin must be connected to the vehicle chassis in the immediate location of the RCM mounting area.

WARNING!

After installing the Restraints Control Module (RCM), make sure all of the connectors are firmly connected, and the harness is routed properly. The resistance between the RCM housing and the vehicle body should be less than 100 mΩ.

On Board Diagnostic Logic

- Self-diagnosis detection logic.

DTC NO.	DTC DEFINITION	DTC DETECTION CONDITION	DTC SET CONDITION	POSSIBLE CAUSE
B1352	Passenger Airbag Resistance Too High Or Open (1st Stage)	Ignition switch: ON	Restraints Control Module (RCM) detected that the resistance of RCM connector terminals is out of the specification range.	• Passenger airbag module • Spiral cable • Passenger airbag module connector • Harness is open between passenger airbag module and RCM • RCM

FIRING LOOP RESISTANCE FOR PASSENGER FRONT AIRBAG			
COMPONENT	**MIN.**	**NOMINAL**	**MAX.**
Squib (Rs)	1.7 Ω	2.0 Ω	2.3 Ω
Wiring Harness (Rw)	0 Ω	0 Ω	0.2 Ω
Connector Terminals (Rt)	0 Ω	0 Ω	0.05 Ω
Total Resistance	1.7 Ω	2.0 Ω	2.55 Ω

TEST FOR PASSENGER FRONT AIRBAG FIRING LOOP DIAGNOSIS		
RESISTANCE RANGE: R(DAB) = Rs + Rt + Rw	**DESCRIPTION**	**FAULT INDICATION**
R(DAB) < 0.4 Ω	Resistance too low or short to GND	Fault definitely detected
1.60 Ω ≤ R(DAB) < 4.84 Ω	Normal	No fault
7.28 Ω ≤ R(DAB)	Resistance too high	Fault definitely detected
0.4 Ω < R(DAB) < 1.60 Ω 4.84 Ω < R(DAB) < 7.28 Ω	Tolerance	Fault may or may not be detected

Downloaded from www.Manualslib.com manuals search engine

FIRING LOOP FOR PASSENGER FRONT AIRBAG	
DESCRIPTION	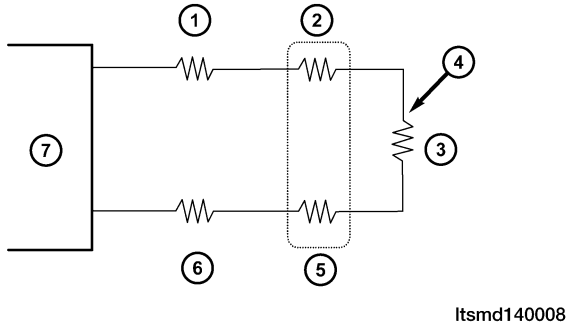
1: Rw - Wiring harness resistance	
2: Rc - Contact coil resistance	
3: Rs + Rt - Squib resistance + terminal resistance	
4: Squib for passenger - side front airbag inflator	
5: Contact coil	
6: Wiring harness	
7: HAE 3.5	
R(DAB) = Rs + Rt + Rw	

DTC Confirmation Procedure:

Before performing the following procedure, confirm that battery voltage is more than 12 V.

- Turn ignition switch off.
- Connect the X-431 scan tool to the Data Link Connector (DLC) - use the latest software available.
- Turn ignition switch on.
- With the scan tool, record and erase stored DTCs in the RCM.
- Turn ignition switch off and wait for a few seconds.
- Turn ignition switch on then select view DTC.
- If the DTC is detected, the DTC condition is current. Go to Diagnostic Procedure - Step 1.
- If the DTC is not detected, the DTC condition is intermittent (See Diagnostic Help and Intermittent DTC Troubleshooting in Section 14 Restraints for more information).

Diagnostic Guide Lines

Observe the following guide lines while diagnosing this DTC:

- Troubleshoot any Engine Control Module (ECM) charging/cranking DTCs before proceeding.
- If the warning lamp goes out immediately after the warning lamp flashed for 6 - 7 seconds, this indicates that the system is OK.
- If the warning lamp is on for 6 - 7 seconds continuously, then goes out, or the warning lamp is on continuously, this indicates that there are history DTCs in the system. Use the Scan Tool to erase the DTCs.
- If any other condition occurs, use the Scan Tool to erase the history DTCs first, then check the warning lamp. If the warning lamp does not go out immediately after the warning lamp flashes for 6 - 7 seconds when using the Scan Tool, erase the history DTCs first.
- In the course of troubleshooting the airbag system, make sure the system power supply is shut off, and wait two minutes for the system capacitor to discharge.
- The squib circuit connectors integrate a ″shorting″ spring (which prevents the airbag from deploying unintentionally due to static electricity by shorting the positive wire to the negative wire in the squib circuit when the connectors are disconnected). Therefore, if the airbag electrical connector or spiral cable electrical connector is damaged or improperly connected, the shorting spring may not be released when the electrical connector is connected.
- The following tools are required to perform the DTC diagnostic procedure:
  - X-431 Scan Tool
  - Airbag Special Load Tool
  - Digital Multimeter

NOTE :
While performing electrical diagnosis & testing, always refer to the electrical schematics for specific circuit and component information.

Downloaded from www.Manualslib.com manuals search engine

Diagnostic Procedure

1. CHECK RCM DTC

- With the scan tool X-431, view DTCs in the RCM.

Is DTC B1352 present?

Yes >> Go to the next step.

No >> Go to step 6.

2. CHECK FRONT PASSENGER AIRBAG MODULE

- Turn ignition switch off.
- Disconnect the negative battery cable.

WARNING!

To avoid serious or fatal injury, turn ignition switch off, disconnect the negative battery cable and wait two minutes before proceeding.

- Disconnect the passenger airbag module electrical connector.

NOTE :
Check connectors - Clean and repair as necessary.
- Connect the airbag special load tool to the spiral cable side of the vehicle harness (connect the special tool resistor (2 Ω) in place of the passenger airbag module).
- Connect the negative battery cable.

WARNING!

To avoid serious or fatal injury, the passenger airbag module should not be check by multimeter.

NOTE :
If the airbag special load tool is not available, connect a known good passenger airbag module.

WARNING!

To avoid serious or fatal injury, reconnect the battery, then turn ignition switch on.

- Turn ignition switch on.
- With the scan tool, erase the DTC memory.
- Turn ignition switch off, and wait a few seconds, then turn ignition switch on.
- With the scan tool, read the RCM DTCs

Is DTC B1352 present?

Yes >> Go to the next step.

No >> Replace the passenger airbag module (See Passenger Airbag Module Removal & Installation in Section 14 Restraints).
Reassemble the vehicle and road test to verify the customers complaint is repaired.

3. CHECK PASSENGER AIRBAG MODULE CONTROL CIRCUITS

WARNING!

To avoid serious or fatal injury, turn ignition switch off, disconnect the negative battery cable and wait two minutes before proceeding.

Downloaded from www.Manualslib.com manuals search engine

- Disconnect the airbag special load tool.
- Disconnect the RCM connector (1) (See Restraints Control Module (RCM) Removal & Installation in Section 14 Restraints).

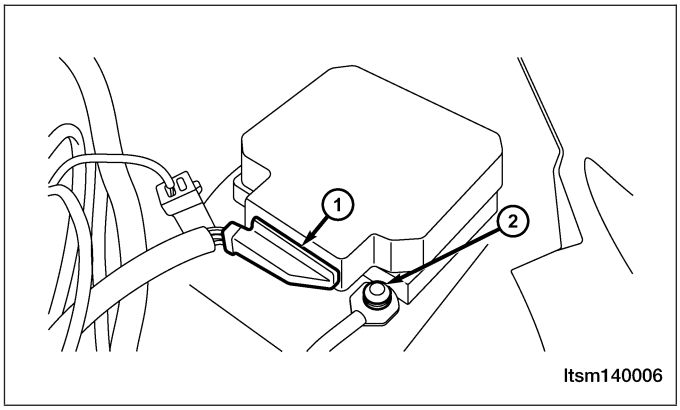

NOTE :
Check connectors - Clean and repair as necessary.
- Check the harness for continuity of the passenger airbag circuit between terminal 13 in the RCM electrical connector J-001 terminal side and terminal 1 in the passenger airbag electrical connector J-002 terminal side.
- Continuity should exist.

CHECK CONTINUITY			
FRONT PASSENGER AIRBAG TERMINAL	**RCM TERMINAL**	**CONTINUITY**	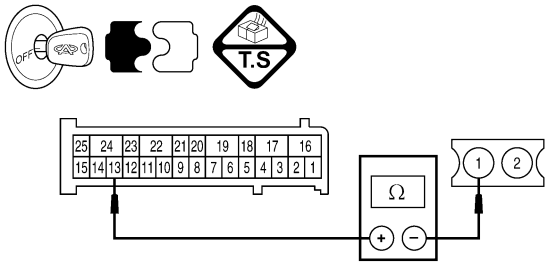
1	13	Yes	

- Check the harness for continuity of the passenger airbag circuit between terminal 14 in the RCM electrical connector J-001 terminal side and terminal 2 in the passenger airbag electrical connector J-002 terminal side.
- Continuity should exist.

CHECK CONTINUITY			
FRONT PASSENGER AIRBAG TERMINAL	**RCM TERMINAL**	**CONTINUITY**	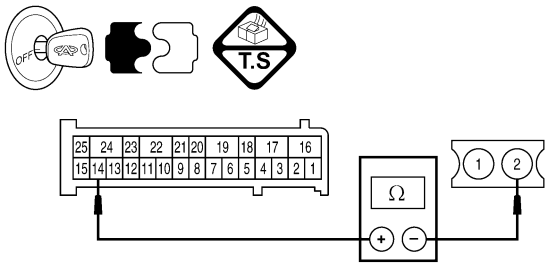
2	14	Yes	

Is the check result normal?

Yes >> Go to the next step.

No >> Replace the spiral cable.

Downloaded from www.Manualslib.com manuals search engine

4. CHECK CONNECTORS

NOTE :
Diagnose and repair all active codes before diagnosing stored codes (See Restraints Control Module DTC List in Section 14 Restraints).

- With the scan tool, record and erase all RCM DTCs.
- Using the electrical schematic as a guide, inspect the following:
  - Inspect the wiring and connectors of the related airbag system.
  - Look for any chafed, pierced, pinched, or partially broken wires.
  - Look for broken, bent, pushed out or corroded terminals.
  - Verify that there is good pin to terminal contact in the related connectors.

Were any problems found?

Yes >> Repair as necessary.

No >> Go to the next step.

5. CHECK DTC

- Reconnect all disconnected components and harness connectors.
- With the X-431 scan tool, read RCM DTCs.
- Refer to ″DTC Confirmation Procedure″.

Is DTC B1352 still present?

Yes >> Replace the RCM.

No >> The system is now operating properly.
Reassemble the vehicle and road test to verify the customers complaint is repaired.

Downloaded from www.Manualslib.com manuals search engine

B2501 - Warning Lamp Fault-Open

SRC - DIAG - 01

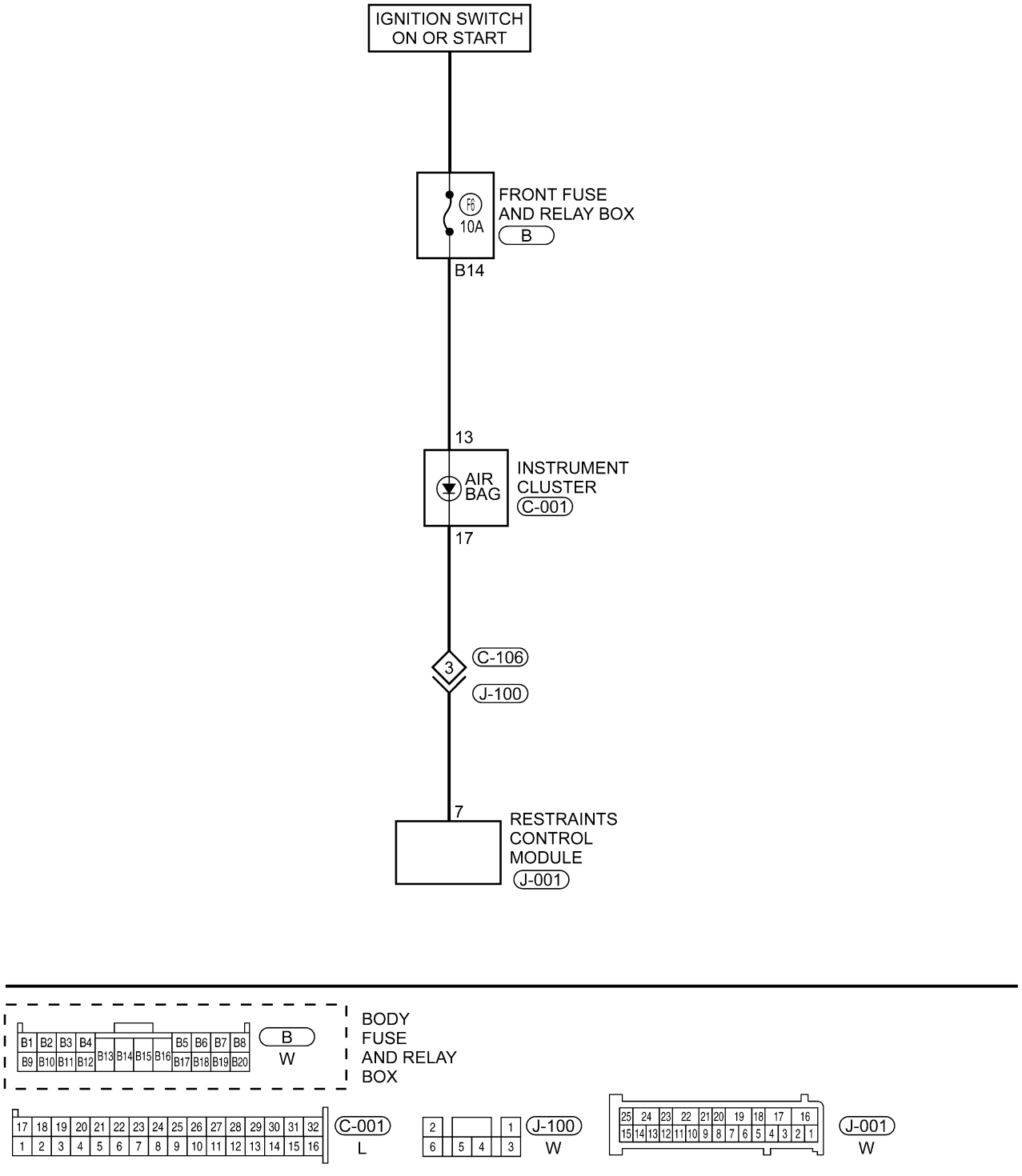

ltsmw140008t

Downloaded from www.Manualslib.com manuals search engine

NOTE :
The Restraints Control Module (RCM) ground pin must be connected to the vehicle chassis in the immediate location of the RCM mounting area.

WARNING!

After installing the Restraints Control Module (RCM), make sure all of the connectors are firmly connected, and the harness is routed properly. The resistance between the RCM housing and the vehicle body should be less than 100 mΩ.

On Board Diagnostic Logic

- Self-diagnosis detection logic.

DTC NO.	DTC DEFINITION	DTC DETECTION CONDITION	DTC SET CONDITION	POSSIBLE CAUSE
B2501	Warning Lamp Fault - Open	Ignition switch: ON	This DTC will set if the airbag warning lamp driver circuit is shorted to ground or open between the airbag warning lamp and the Restraints Control Module (RCM).	• Instrument cluster • Harness is open between instrument cluster and RCM • RCM

DTC Confirmation Procedure:

Before performing the following procedure, confirm that battery voltage is more than 12 V.
- Turn ignition switch off.
- Connect the X-431 scan tool to the Data Link Connector (DLC) - use the latest software available.
- Turn ignition switch on.
- With the scan tool, record and erase stored DTCs in the RCM.
- Turn ignition switch off and wait for a few seconds.
- Turn ignition switch on then select view DTC.
- If the DTC is detected, the DTC condition is current. Go to Diagnostic Procedure - Step 1.
- If the DTC is not detected, the DTC condition is intermittent (See Diagnostic Help and Intermittent DTC Troubleshooting in Section 14 Restraints for more information).

Diagnostic Guide Lines

Observe the following guide lines while diagnosing this DTC:
- Troubleshoot any Engine Control Module (ECM) charging/cranking DTCs before proceeding.
- If the warning lamp goes out immediately after the warning lamp flashed for 6 - 7 seconds, this indicates that the system is OK.
- If the warning lamp is on for 6 - 7 seconds continuously, then goes out, or the warning lamp is on continuously, this indicates that there are history DTCs in the system. Use the Scan Tool to erase the DTCs.
- If any other condition occurs, use the Scan Tool to erase the history DTCs first, then check the warning lamp. If the warning lamp does not go out immediately after the warning lamp flashes for 6 - 7 seconds when using the Scan Tool, erase the history DTCs first.
- In the course of troubleshooting the airbag system, make sure the system power supply is shut off, and wait two minutes for the system capacitor to discharge.
- The squib circuit connectors integrate a ″shorting″ spring (which prevents the airbag from deploying unintentionally due to static electricity by shorting the positive wire to the negative wire in the squib circuit when the connectors are disconnected). Therefore, if the airbag electrical connector or spiral cable electrical connector is damaged or improperly connected, the shorting spring may not be released when the electrical connector is connected.
- The following tools are required to perform the DTC diagnostic procedure:
  - X-431 Scan Tool
  - Airbag Special Load Tool
  - Digital Multimeter

Downloaded from www.Manualslib.com manuals search engine

NOTE :
While performing electrical diagnosis & testing, always refer to the electrical schematics for specific circuit and component information.

Diagnostic Procedure

1. CHECK RCM DTC

- Connect the X-431 scan tool to the Data Link Connector (DLC) - use the most current software available.
- Turn the ignition switch on, with the scan tool, view and erase stored DTCs in the RCM.
- Turn the ignition switch off, and wait a few seconds, then turn the ignition switch on.
- Wait one minute, and with the scan tool, view active DTCs in the RCM.

Is DTC B2501 present?

Yes >> Go to the next step.

No >> Go to step 5.

2. CHECK WARNING LAMP

- Turn ignition switch off, and wait a few seconds, then turn ignition switch on.
- Observe the airbag warning lamp.

Is the airbag warning lamp not illuminated with the ignition switch ON?

Yes >> Go to the next step.

No >> Go to step 4.

3. CHECK WARNING LAMP CIRCUITS

WARNING!

To avoid serious or fatal injury, turn ignition switch off, disconnect the negative battery cable and wait two minutes before proceeding.

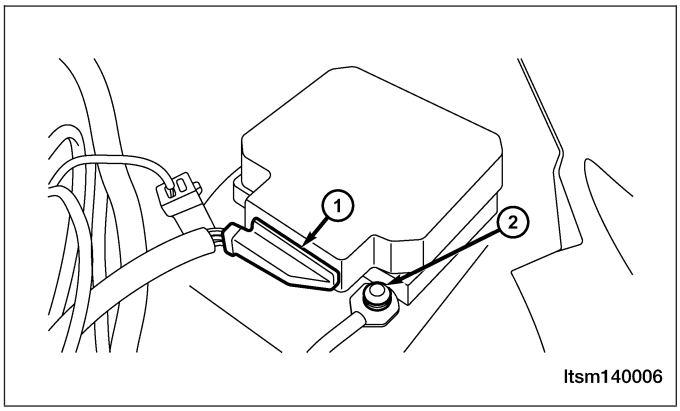

- Disconnect the RCM electrical connector (1) (See Restraints Control Module (RCM) Removal & Installation in Section 14 Restraints).
- Disconnect the instrument cluster electrical connector.
- Disconnect the front fuse and relay box electrical connector B14.

NOTE :
Check connectors - Clean and repair as necessary.

- Check fuse F6.
- Measure the following circuits with a digital multimeter:
  - Harness connector C-106, J-100.
  - Harness for an open between the front fuse and relay box electrical connector (terminal B4, B14) and instrument cluster C-001 (terminal 11 and 13).
  - Harness for open between the instrument cluster C-001 (terminal 17) and RCM electrical connector J-001 (terminal 7).
- Check the harness for continuity.

Downloaded from www.Manualslib.com manuals search engine

- Continuity should exist.

Is the check result normal?

Yes >> Replace the instrument cluster.
If DTC is still present, Go to the next step.

No >> Repair the harness wires between the RCM electrical connector J-001 (terminal 7) and instrument cluster C-001 (terminal 17) and the harness wires between combination meter C-001 (terminal 13) and front fuse and relay box electrical connector (terminal B14) for an open.

4. CHECK CONNECTORS

NOTE :
Diagnose and repair all active codes before diagnosing stored codes (See Restraints Control Module DTC List in Section 14 Restraints).

- With the scan tool, record and erase all RCM DTCs.
- Using the electrical schematic as a guide, inspect the following:
  - Inspect the wiring and connectors of the related airbag system.
  - Look for any chafed, pierced, pinched, or partially broken wires.
  - Look for broken, bent, pushed out or corroded terminals.
  - Verify that there is good pin to terminal contact in the related connectors.

Were any problems found?

Yes >> Repair as necessary.

No >> Go to the next step.

5. CHECK DTC

- Reconnect all disconnected components and harness connectors.
- With the X-431 scan tool, read RCM DTCs.
- Refer to ″DTC Confirmation Procedure″.

Is DTC B2501 still present?

Yes >> Replace the RCM.

No >> The system is now operating properly.
Reassemble the vehicle and road test to verify the customers complaint is repaired.

Downloaded from www.Manualslib.com manuals search engine

B2503 - Warning Lamp Fault-Short To Ground

SRC - DIAG - 01

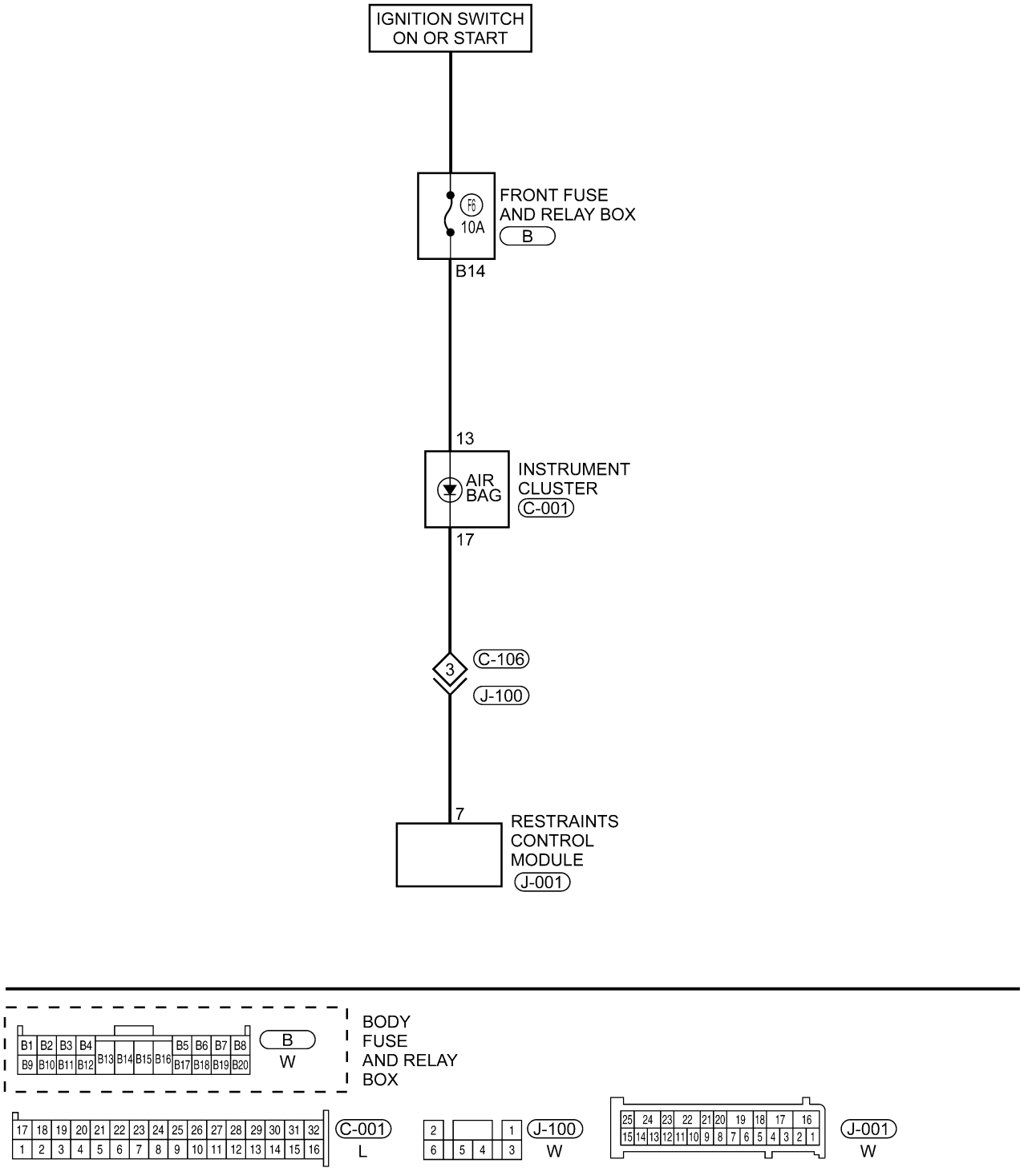

ltsmw140008t

Downloaded from www.Manualslib.com manuals search engine

NOTE :
The Restraints Control Module (RCM) ground pin must be connected to the vehicle chassis in the immediate location of the RCM mounting area.

WARNING!

After installing the Restraints Control Module (RCM), make sure all of the connectors are firmly connected, and the harness is routed properly. The resistance between the RCM housing and the vehicle body should be less than 100 mΩ.

On Board Diagnostic Logic

- Self-diagnosis detection logic.

DTC NO.	DTC DEFINITION	DTC DETECTION CONDITION	DTC SET CONDITION	POSSIBLE CAUSE
B2503	Warning Lamp Fault - Short To Ground	Ignition switch: ON	This DTC will set if the airbag warning lamp driver circuit is shorted to ground between the airbag warning lamp and the Restraints Control Module (RCM).	• Instrument cluster • Harness is shorted to ground between instrument cluster and RCM • RCM

DTC Confirmation Procedure:

Before performing the following procedure, confirm that battery voltage is more than 12 V.
- Turn ignition switch off.
- Connect the X-431 scan tool to the Data Link Connector (DLC) - use the latest software available.
- Turn ignition switch on.
- With the scan tool, record and erase stored DTCs in the RCM.
- Turn ignition switch off and wait for a few seconds.
- Turn ignition switch on then select view DTC.
- If the DTC is detected, the DTC condition is current. Go to Diagnostic Procedure - Step 1.
- If the DTC is not detected, the DTC condition is intermittent (See Diagnostic Help and Intermittent DTC Troubleshooting in Section 14 Restraints for more information).

Diagnostic Guide Lines

Observe the following guide lines while diagnosing this DTC:
- Troubleshoot any Engine Control Module (ECM) charging/cranking DTCs before proceeding.
- If the warning lamp goes out immediately after the warning lamp flashed for 6 - 7 seconds, this indicates that the system is OK.
- If the warning lamp is on for 6 - 7 seconds continuously, then goes out, or the warning lamp is on continuously, this indicates that there are history DTCs in the system. Use the Scan Tool to erase the DTCs.
- If any other condition occurs, use the Scan Tool to erase the history DTCs first, then check the warning lamp. If the warning lamp does not go out immediately after the warning lamp flashes for 6 - 7 seconds when using the Scan Tool, erase the history DTCs first.
- In the course of troubleshooting the airbag system, make sure the system power supply is shut off, and wait two minutes for the system capacitor to discharge.
- The squib circuit connectors integrate a ″shorting″ spring (which prevents the airbag from deploying unintentionally due to static electricity by shorting the positive wire to the negative wire in the squib circuit when the connectors are disconnected). Therefore, if the airbag electrical connector or spiral cable electrical connector is damaged or improperly connected, the shorting spring may not be released when the electrical connector is connected.
- The following tools are required to perform the DTC diagnostic procedure:
  - X-431 Scan Tool
  - Airbag Special Load Tool
  - Digital Multimeter

Downloaded from www.Manualslib.com manuals search engine

NOTE :
While performing electrical diagnosis & testing, always refer to the electrical schematics for specific circuit and component information.

Diagnostic Procedure

1. CHECK RCM DTC

- Connect the X-431 scan tool to the Data Link Connector (DLC) - use the most current software available.
- Turn the ignition switch on, with the scan tool, view and erase stored DTCs in the RCM.
- Turn the ignition switch off, and wait a few seconds, then turn the ignition switch on.
- Wait one minute, and with the scan tool, view active DTCs in the RCM.

Is DTC B2503 present?

Yes >> Go to the next step.

No >> Go to step 5.

2. CHECK WARNING LAMP

- Turn ignition switch off, and wait a few seconds, then turn ignition switch on.
- Observe the airbag warning lamp.

Is the airbag warning lamp illuminated constantly with the ignition ON?

Yes >> Go to the next step.

No >> Go to step 4.

3. CHECK WARNING LAMP CIRCUITS

WARNING!

To avoid serious or fatal injury, turn ignition switch off, disconnect the negative battery cable and wait two minutes before proceeding.

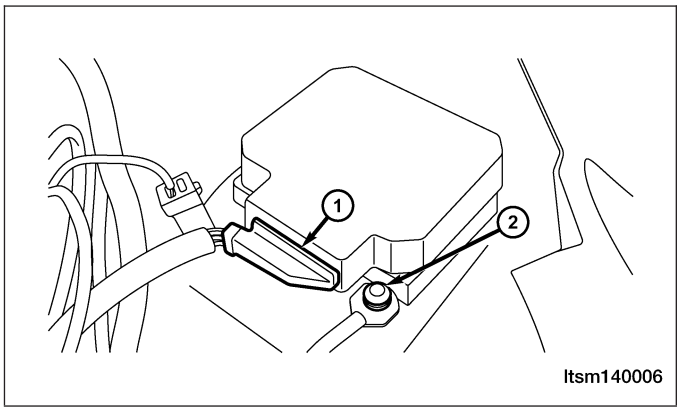

- Disconnect the RCM electrical connector (1) (See Restraints Control Module (RCM) Removal & Installation in Section 14 Restraints).
- Disconnect the instrument cluster electrical connector.
- Disconnect the front fuse and relay box electrical connector B14.

NOTE :
Check connectors - Clean and repair as necessary.

- Check fuse F6.
- Measure the following circuits with a digital multimeter:
  - Harness for a short to ground between the front fuse and relay box electrical connector (terminal B14) and instrument cluster C-001 (terminal 13).
  - Harness for a short to ground between the instrument cluster C-001 (terminal 17) and RCM electrical connector J-001 (terminal 7).
  - Harness connector C-106, J-100.

Downloaded from www.Manualslib.com manuals search engine

- The harness continuity between the front fuse and relay box electrical connector (terminal B14) and RCM electrical connector J-001 (terminal 7) should not exists.

Is the check result normal?

Yes >> Replace the instrument cluster.
If DTC is still present, go the next step.

No >> Repair the harness between the RCM electrical connector J-001 (terminal 7) and instrument cluster C-001 (terminal 17) and the harness between combination meter C-001 (terminal 13) and front fuse and relay box electrical connector (terminal B14) for an short to ground.

4. CHECK CONNECTORS

NOTE :
Diagnose and repair all active codes before diagnosing stored codes (See Restraints Control Module DTC List in Section 14 Restraints).

- With the scan tool, record and erase all RCM DTCs.
- Using the electrical schematic as a guide, inspect the following:
  - Inspect the wiring and connectors of the related airbag system.
  - Look for any chafed, pierced, pinched, or partially broken wires.
  - Look for broken, bent, pushed out or corroded terminals.
  - Verify that there is good pin to terminal contact in the related connectors.

Were any problems found?

Yes >> Repair as necessary.

No >> Go to the next step.

5. CHECK DTC

- Reconnect all disconnected components and harness connectors.
- With the X-431 scan tool, read RCM DTCs.
- Refer to ″DTC Confirmation Procedure″.

Is DTC B2503 still present?

Yes >> Replace the RCM.

No >> The system is now operating properly.
Reassemble the vehicle and road test to verify the customers complaint is repaired.

Downloaded from www.Manualslib.com manuals search engine

B2504 - Warning Lamp Fault-Short To Battery

SRC - DIAG - 01

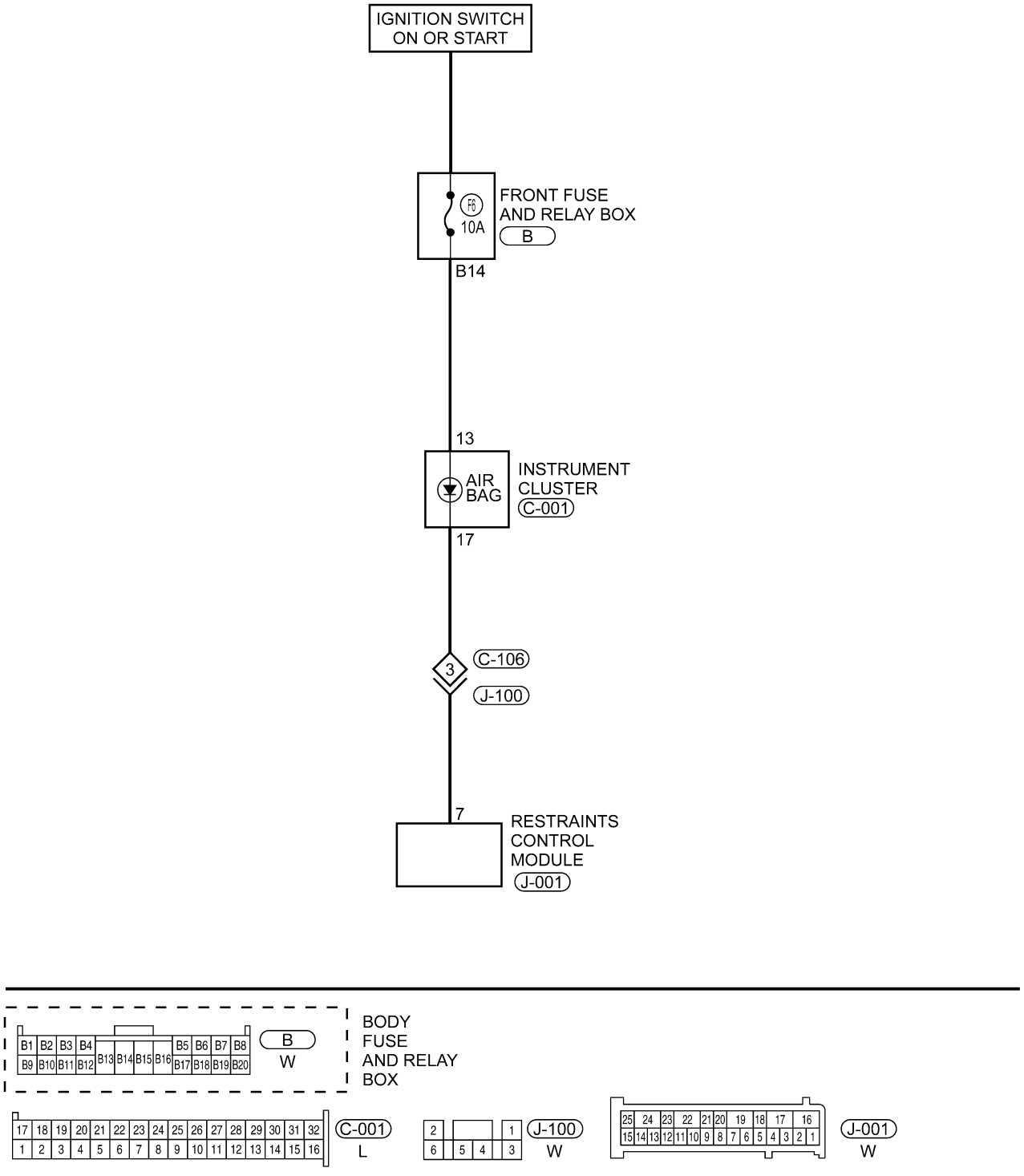

ltsmw140008t

Downloaded from www.Manualslib.com manuals search engine

NOTE :
The Restraints Control Module (RCM) ground pin must be connected to the vehicle chassis in the immediate location of the RCM mounting area.

WARNING!

After installing the Restraints Control Module (RCM), make sure all of the connectors are firmly connected, and the harness is routed properly. The resistance between the RCM housing and the vehicle body should be less than 100 mΩ.

On Board Diagnostic Logic

- Self-diagnosis detection logic.

DTC NO.	DTC DEFINITION	DTC DETECTION CONDITION	DTC SET CONDITION	POSSIBLE CAUSE
B2504	Warning lamp fault - short to battery	Ignition switch: ON	This DTC will set if the airbag warning lamp driver circuit is shorted to ground or open between the airbag warning lamp and the Restraints Control Module (RCM).	• Instrument cluster • Harness is open between instrument cluster and RCM • RCM

DTC Confirmation Procedure:

Before performing the following procedure, confirm that battery voltage is more than 12 V.
- Turn ignition switch off.
- Connect the X-431 scan tool to the Data Link Connector (DLC) - use the latest software available.
- Turn ignition switch on.
- With the scan tool, record and erase stored DTCs in the RCM.
- Turn ignition switch off and wait for a few seconds.
- Turn ignition switch on then select view DTC.
- If the DTC is detected, the DTC condition is current. Go to Diagnostic Procedure - Step 1.
- If the DTC is not detected, the DTC condition is intermittent (See Diagnostic Help and Intermittent DTC Troubleshooting in Section 14 Restraints for more information).

Diagnostic Guide Lines

Observe the following guide lines while diagnosing this DTC:
- Troubleshoot any Engine Control Module (ECM) charging/cranking DTCs before proceeding.
- If the warning lamp goes out immediately after the warning lamp flashed for 6 - 7 seconds, this indicates that the system is OK.
- If the warning lamp is on for 6 - 7 seconds continuously, then goes out, or the warning lamp is on continuously, this indicates that there are history DTCs in the system. Use the Scan Tool to erase the DTCs.
- If any other condition occurs, use the Scan Tool to erase the history DTCs first, then check the warning lamp. If the warning lamp does not go out immediately after the warning lamp flashes for 6 - 7 seconds when using the Scan Tool, erase the history DTCs first.
- In the course of troubleshooting the airbag system, make sure the system power supply is shut off, and wait two minutes for the system capacitor to discharge.
- The squib circuit connectors integrate a ″shorting″ spring (which prevents the airbag from deploying unintentionally due to static electricity by shorting the positive wire to the negative wire in the squib circuit when the connectors are disconnected). Therefore, if the airbag electrical connector or spiral cable electrical connector is damaged or improperly connected, the shorting spring may not be released when the electrical connector is connected.
- The following tools are required to perform the DTC diagnostic procedure:
  - X-431 Scan Tool
  - Airbag Special Load Tool
  - Digital Multimeter

Downloaded from www.Manualslib.com manuals search engine

NOTE :
While performing electrical diagnosis & testing, always refer to the electrical schematics for specific circuit and component information.

Diagnostic Procedure

1. CHECK RCM DTC

- Perform the DTC confirmation procedure.

Is DTC B2504 present?

Yes >> Go to the next step.

No >> Go to step 5.

2. CHECK WARNING LAMP

- Turn ignition switch off, and wait a few seconds, then turn ignition switch on.
- Observe SRS warning lamp.

Is the SRS warning lamp not illuminated with ignition switch ON?

Yes >> Go to the next step.

No >> Go to step 4.

3. CHECK WARNING LAMP CIRCUITS

WARNING!

To avoid serious or fatal injury, turn ignition switch off, disconnect the negative battery cable and wait two minutes before proceeding.

- Disconnect the RCM electrical connector (1) (See Restraints Control Module (RCM) Removal & Installation in Section 14 Restraints).
- Disconnect the instrument cluster electrical connector.
- Disconnect the front fuse and relay box electrical connector B14.

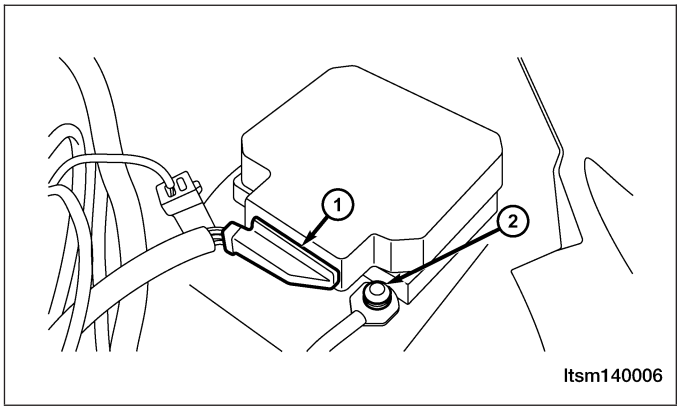

NOTE :
Check connectors - Clean and repair as necessary.

- Check fuse F6.
- Measure the following circuits with a digital multimeter:
  - Harness connector C-106, J-100.
  - Harness for short to battery between the instrument cluster C-001 (terminal 17) and RCM electrical connector J-001 (terminal 7).

Is the voltage present?

Yes >> Repair the harness wires between the RCM electrical connector J-001 (terminal 7) and instrument cluster C-001 (terminal 17) and the harness wires between combination meter C-001 (terminal 13) and front fuse and relay box electrical connector (terminal B14) for an short to battery.

No >> Replace the instrument cluster.
If DTC is still present, go to the next step.

Downloaded from www.Manualslib.com manuals search engine

4. CHECK CONNECTORS

NOTE :
Diagnose and repair all active codes before diagnosing stored codes (See Restraints Control Module DTC List in Section 14 Restraints).

- With the scan tool, record and erase all RCM DTCs.
- Using the electrical schematic as a guide, inspect the following:
  - Inspect the wiring and connectors of the related airbag system.
  - Look for any chafed, pierced, pinched, or partially broken wires.
  - Look for broken, bent, pushed out or corroded terminals.
  - Verify that there is good pin to terminal contact in the related connectors.

Were any problems found?

Yes >> Repair as necessary.

No >> Go to the next step.

5. CHECK DTC

- Reconnect all disconnected components and harness connectors.
- With the X-431 scan tool, read RCM DTCs.
- Refer to ″DTC Confirmation Procedure″.

Is DTC B2504 still present?

Yes >> Replace the RCM.

No >> The system is now operating properly.
Reassemble the vehicle and road test to verify the customers complaint is repaired.

Downloaded from www.Manualslib.com manuals search engine

B1620 - Internal Fault - Replace ECU

SRC - PWR - 01

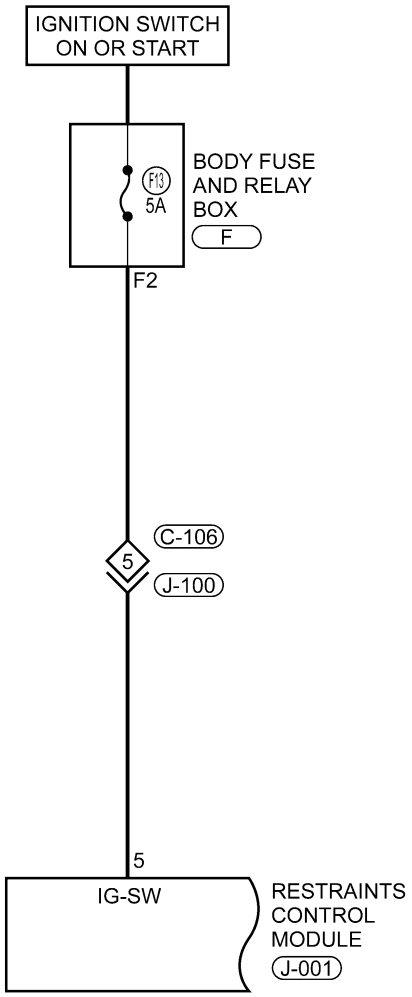

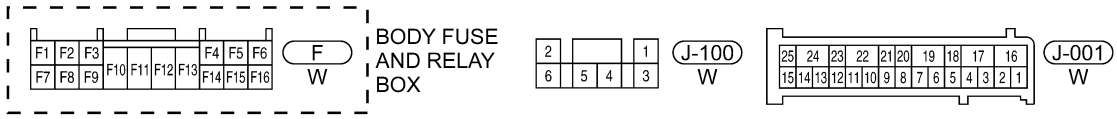

ltsmw140002t

Downloaded from www.Manualslib.com manuals search engine

SRC - PWR - 02

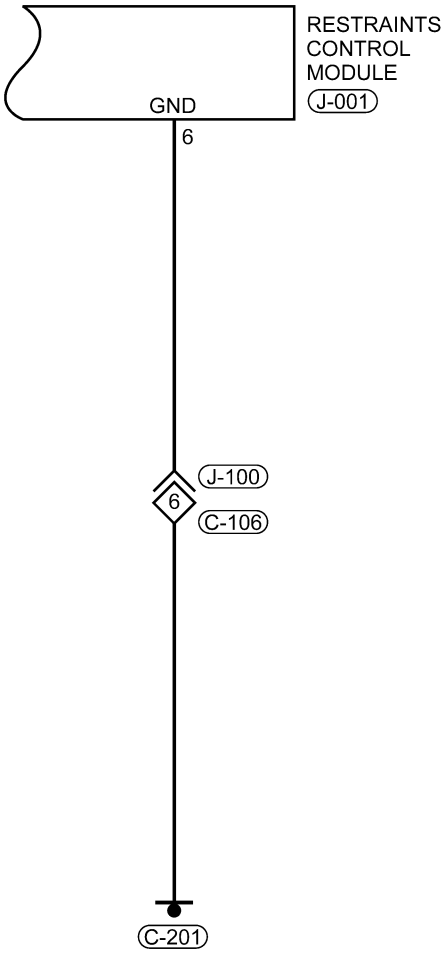

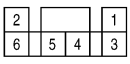

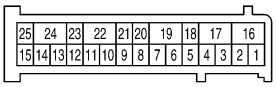

ltsmw140003t

Downloaded from www.Manualslib.com manuals search engine

On Board Diagnostic Logic

- Self-diagnosis detection logic.

DTC NO.	DTC DEFINITION	DTC DETECTION CONDITION	DTC SET CONDITION	POSSIBLE CAUSE
B1620	Internal Fault - Replace ECU	Ignition switch on	Restraints Control Module (RCM) detected an internal failure.	• RCM

DTC Confirmation Procedure:

Before performing the following procedure, confirm that battery voltage is more than 12 V.

- Turn ignition switch off.
- Connect the X-431 scan tool to the Data Link Connector (DLC) - use the latest software available.
- Turn ignition switch on.
- With the scan tool, record and erase stored DTCs in the RCM.
- Turn ignition switch off and wait for a few seconds.
- Turn ignition switch on then select view DTC.
- If the DTC is detected, the DTC condition is current. Go to Diagnostic Procedure - Step 1.
- If the DTC is not detected, the DTC condition is intermittent (See Diagnostic Help and Intermittent DTC Troubleshooting in Section 14 Restraints for more information).

Diagnostic Guide Lines

Observe the following guide lines while diagnosing this DTC:

- Troubleshoot any Engine Control Module (ECM) charging/cranking DTCs before proceeding.
- If the warning lamp goes out immediately after the warning lamp flashed for 6 - 7 seconds, this indicates that the system is OK.
- If the warning lamp is on for 6 - 7 seconds continuously, then goes out, or the warning lamp is on continuously, this indicates that there are history DTCs in the system. Use the Scan Tool to erase the DTCs.
- If any other condition occurs, use the Scan Tool to erase the history DTCs first, then check the warning lamp. If the warning lamp does not go out immediately after the warning lamp flashes for 6 - 7 seconds when using the Scan Tool, erase the history DTCs first.
- In the course of troubleshooting the airbag system, make sure the system power supply is shut off, and wait two minutes for the system capacitor to discharge.
- The squib circuit connectors integrate a ″shorting″ spring (which prevents the airbag from deploying unintentionally due to static electricity by shorting the positive wire to the negative wire in the squib circuit when the connectors are disconnected). Therefore, if the airbag electrical connector or spiral cable electrical connector is damaged or improperly connected, the shorting spring may not be released when the electrical connector is connected.
- The following tools are required to perform the DTC diagnostic procedure:
  - X-431 Scan Tool
  - Airbag Special Load Tool
  - Digital Multimeter

NOTE :
While performing electrical diagnosis & testing, always refer to the electrical schematics for specific circuit and component information.

Downloaded from www.Manualslib.com manuals search engine

Diagnostic Procedure

1. CHECK DTC

- Perform the DTC confirmation procedure.

Is DTC B1620 present?

Yes >> Go to the next step.

No >> The condition that caused this DTC to set is currently not present (See Diagnostic Help and Intermittent DTC Troubleshooting in Section 14 Restraints for more information).

2. CHECK GROUND CONNECTION

- Turn ignition switch off.
- Disconnect the negative battery cable.
- Loosen and retighten ground screws on the body (See Ground Inspection in Section 14 Restraints for more information).
- Inspect the ground connection C-201 mounting position (See Vehicle Wiring Harness Layout - Main Harness in Section 16 Wiring).

Is the ground connection OK?

Yes >> Go to the next step.

No >> Repair or replace ground connection.

3. CHECK RESTRAINTS CONTROL MODULE (RCM) ELECTRICAL CONNECTOR

- Disconnect the Restraints Control Module (RCM) electrical connector (1).
- Inspect the electrical connector for damage.

Is the electrical connector OK?

Yes >> Go to the next step.

No >> Repair or replace the electrical connector as necessary.

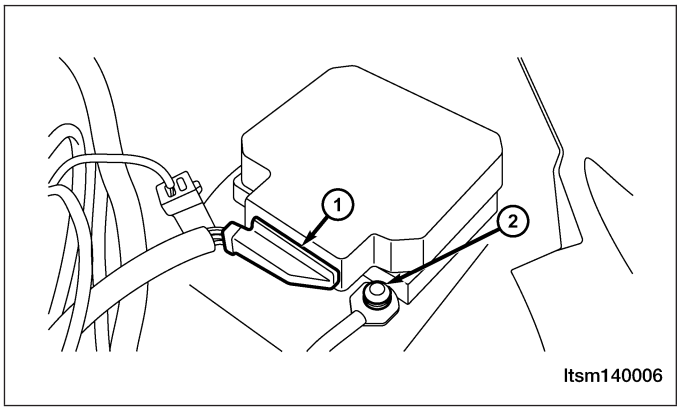

Downloaded from www.Manualslib.com manuals search engine

4. CHECK RESTRAINTS CONTROL MODULE (RCM) POWER SUPPLY

- Turn ignition switch on.
- Check RCM power supply between terminal 5 and terminal 6 in the RCM electrical connector J-001 terminal side.

Is the voltage less than 9 V?

Yes >> Go to step 5.

No >> Replace the RCM.

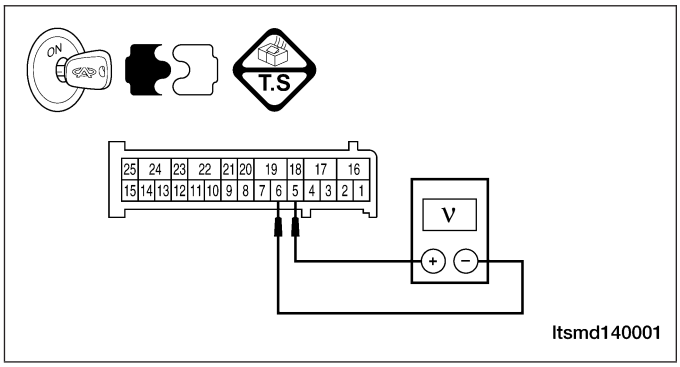

5. CHECK DTC

- With the X-431 scan tool, read RCM DTCs.
- Refer to ″DTC Confirmation Procedure″.

Is DTC B1620 still present?

Yes >> Replace the RCM.

No >> The system is now operating properly.
Reassemble the vehicle and road test to verify the customers complaint is repaired.

Downloaded from www.Manualslib.com manuals search engine

ON-VEHICLE SERVICE

Airbag System Disarming Procedure

Description

WARNING!

The steering column contains the driver's airbag. The airbag system is a sensitive, complex electro-mechanical unit. Before attempting to diagnose, remove or install the airbag system components, you must first disconnect and isolate the negative battery (ground) cable. Then wait two minutes for the system capacitor to discharge. Failure to do so could result in accidental deployment of the airbag and possible personal injury. The fasteners, screws, and bolts, originally used for the airbag components, have special coatings and are specifically designed for the airbag system. They must never be replaced with any substitutes. Anytime a new fastener is needed, replace with the correct fasteners provided in the service package or fasteners listed in the parts books.

1. Turn the ignition off.
2. Disconnect and isolate the negative battery cable.
3. Wait two minutes for the system capacitor to discharge.
4. The airbag system can now be serviced safely.

Driver Side Airbag

Removal & Installation

1. Turn the ignition off.
2. Disconnect the negative battery cable.

WARNING!

Wait two minutes for the airbag system reserve capacitor to discharge before beginning any airbag system or component service. Failure to do so may result in accidental airbag development, serious or fatal injury (See Airbag System Disarming Procedure in Section 14 Restraints).

3. Remove the two driver side airbag retaining bolts (1). (Tighten: Driver side airbag retaining bolts to 10 N·m)

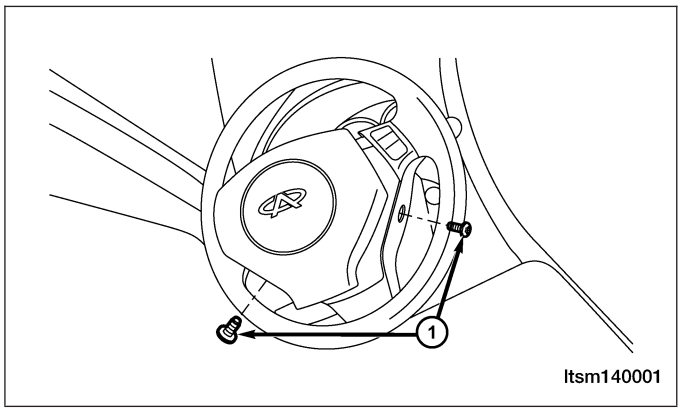

4. Remove the driver side airbag and disconnect the airbag squib electrical connector.
5. Installation is in the reverse order of removal.

Downloaded from www.Manualslib.com manuals search engine

Front Passenger Side Airbag

Removal & Installation

1. Turn the ignition off.
2. Disconnect the negative battery cable.

WARNING!

Wait two minutes for the airbag system reserve capacitor to discharge before beginning any airbag system or component service. Failure to do so may result in accidental airbag development, serious or fatal injury (See Airbag System Disarming Procedure in Section 14 Restraints).

3. Remove the two glove box mounting bolts (1).

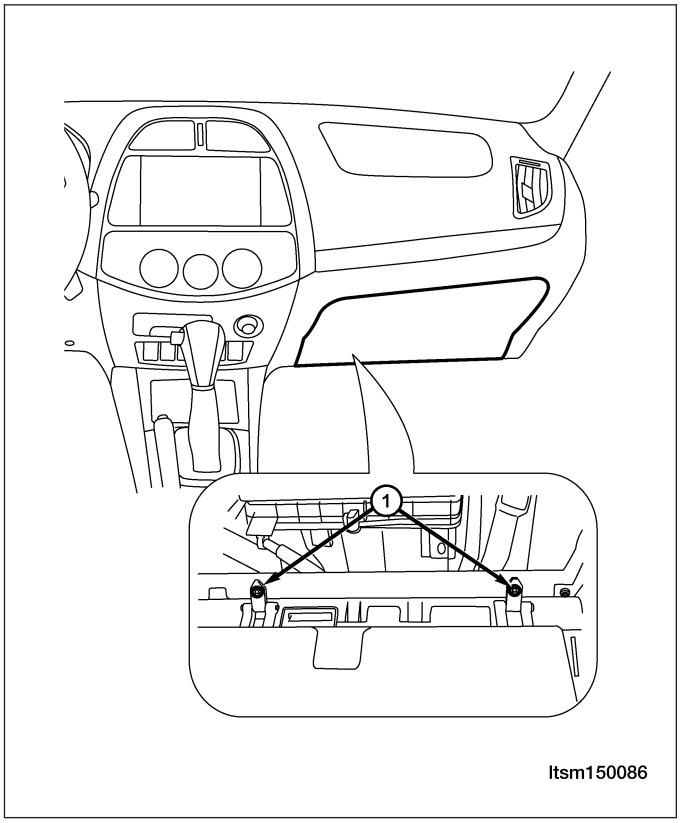

Downloaded from www.Manualslib.com manuals search engine

4. Remove the front passenger side airbag mounting bolts (1).
   (Tighten: Front passenger side airbag mounting bolts to 10 N·m)

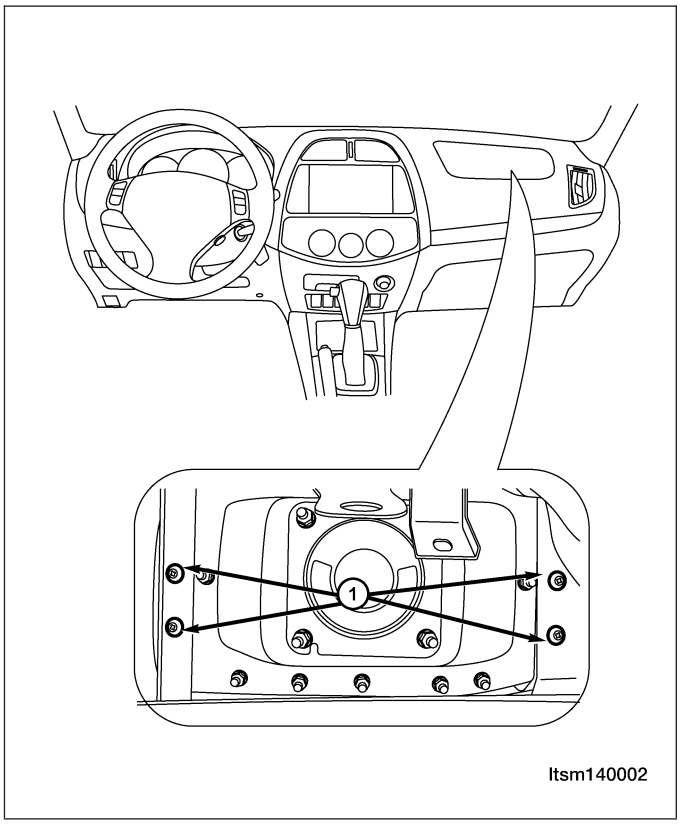

5. Disconnect the front passenger side airbag squib electrical connector.
6. Remove the front passenger side airbag from the vehicle.
7. Installation is in the reverse order of removal.

Downloaded from www.Manualslib.com manuals search engine

Restraints Control Module (RCM)

Removal & Installation

1. Turn the ignition off.
2. Disconnect the negative battery cable.

WARNING!

Wait two minutes for the airbag system reserve capacitor to discharge before beginning any airbag system or component service. Failure to do so may result in accidental airbag development, serious or fatal injury (See Airbag System Disarming Procedure in Section 14 Restraints).

3. Remove the center console (See Center Console Removal & Installation in Section 15 Body & Accessories).
4. Disconnect the Restraints Control Module (RCM) electrical connector (1).
5. Remove the RCM retaining bolts (2).
   (Tighten: RCM retaining bolts to 7-9 N·m)

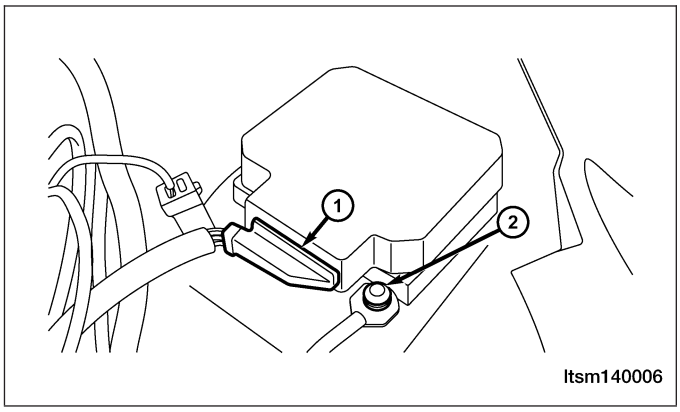

6. Remove the RCM from the vehicle.
7. Installation is in the reverse order of the removal.

Downloaded from www.Manualslib.com manuals search engine

SEAT BELT SYSTEM

GENERAL INFORMATION 14-51
Description 14-51
Operation 14-51
Specifications 14-51
Special Tools 14-51

ON-VEHICLE SERVICE 14-52

Front Seat Belt and Pre-Tensioner 14-52
Removal & Installation 14-52

Seat Belt Slider Track 14-53
Removal & Installation 14-53

Rear Seat Belt and Pre-Tensioner 14-54
Removal & Installation 14-54

Downloaded from www.Manualslib.com manuals search engine

GENERAL INFORMATION

Description

The left and right seat belt buckles are bolted to the base frame of the seat. The seat belt buckles are a typical buckle design with a release button on the top to free the seat belt.

Operation

The primary passenger restraints are the seat belts. Seat belts are referred to as an active restraint because the vehicle occupants are required to physically fasten and properly adjust these restraints in order to benefit from them. The passive restraints are referred to as a supplemental restraint system because they were designed and are intended to enhance the protection for the occupants of the vehicle only when used in conjunction with the seat belts.

Specifications

Torque Specifications

DESCRIPTION	TORQUE (N·m)
Adjustable Shoulder Belt Anchor Bolts	50
Front Seat Belt Buckle Retaining Bolt	50
Front Seat Belt Pre-Tensioner Lower Retaining Bolt	50
Front Seat Belt Upper Turning Loop Retaining Bolt	50
Rear Seat Belt Pre-Tensioner Upper Retaining Bolt	50
Rear Seat Belt Pre-Tensioner Lower Retaining Bolt	50

Special Tools

Digital Multimeter Fluke 15B & 17B	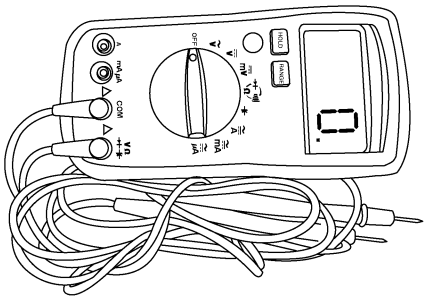 besm030002

14

Downloaded from www.Manualslib.com manuals search engine

Front Seat Belt and Pre-Tensioner

Removal & Installation

1. Turn the ignition off.
2. Disconnect the negative battery cable.
3. Remove the seat belt upper mounting bolt (1).

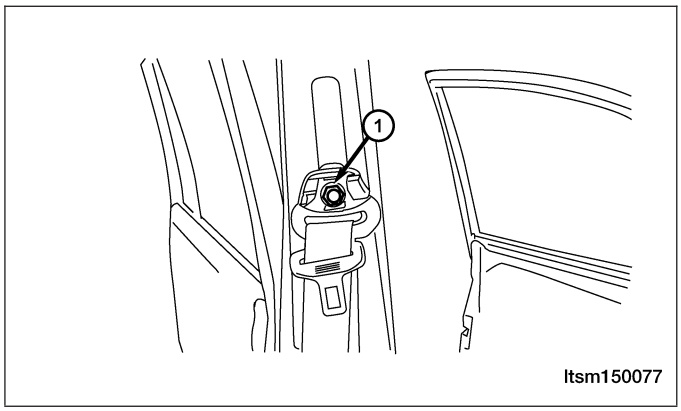

4. Remove the seat belt lower mounting bolt (1).
5. Remove the B-pillar lower trim panel.

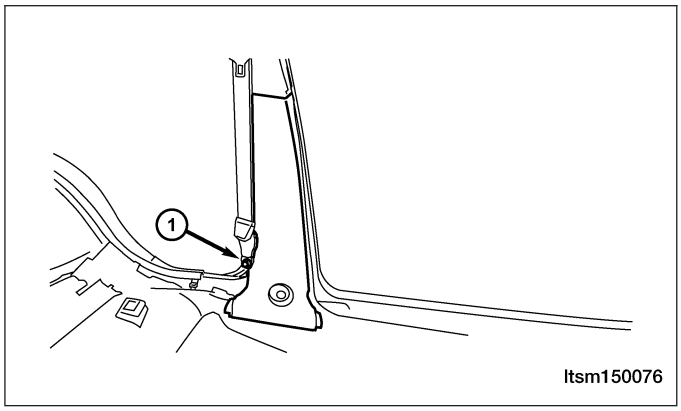

Downloaded from www.Manualslib.com manuals search engine

6. Remove the front seat belt pre-tensioner retaining bolt (1) and screw (2).
   (Tighten: Front seat belt retaining bolt to 50 N·m)

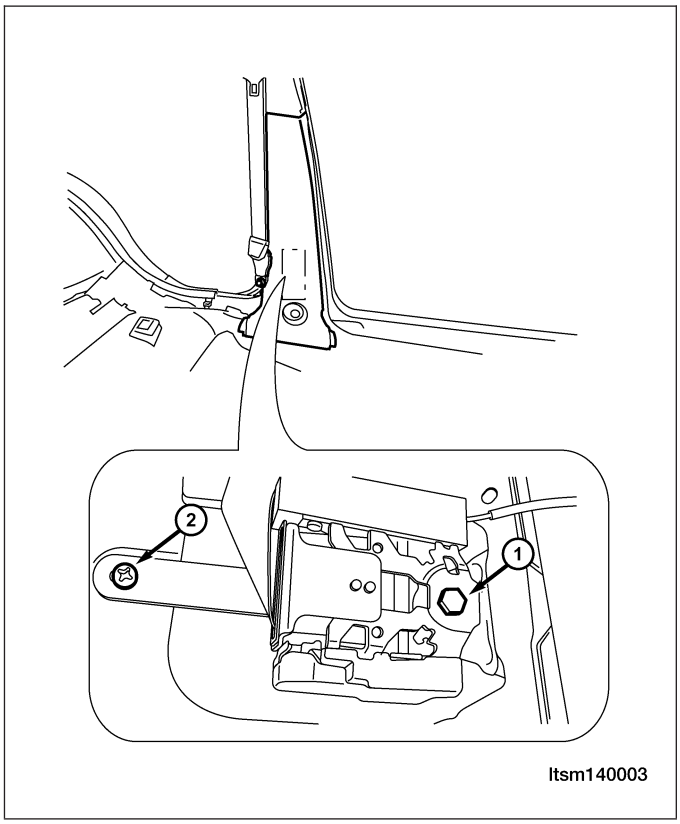

7. Remove the front seat belt and pre-tensioner.
8. Installation is in the reverse order of removal.

Seat Belt Slider Track

Removal & Installation

1. Turn the ignition off.
2. Remove the seat belt upper mounting bolt (1).

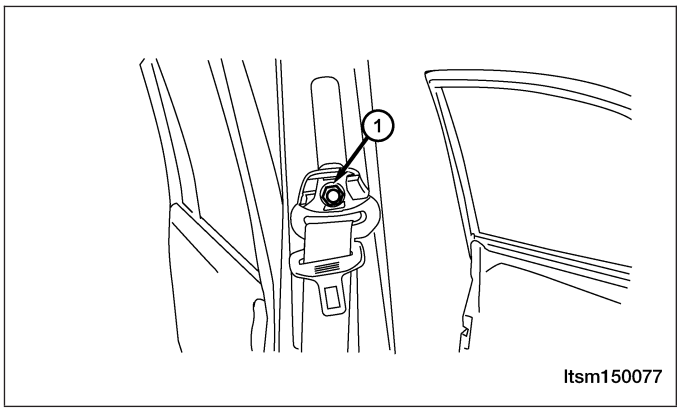

3. Remove the B-pillar upper trim panel.

Downloaded from www.Manualslib.com manuals search engine

4. Remove the two bolts (1) and then remove the seat belt slider track.
   (Tighten: Adjustable shoulder belt anchor bolts to 50 N·m)

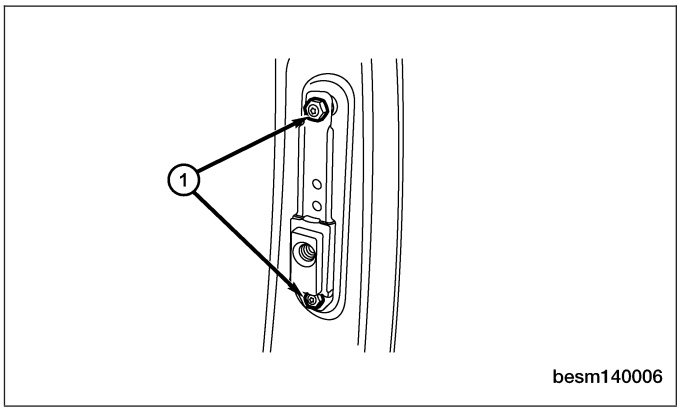

5. Installation is in the reverse order of the removal.

Rear Seat Belt and Pre-Tensioner

Removal & Installation

1. Turn the ignition off.
2. Remove the rear seat belt mounting bolts (1).
   (Tighten: Rear seat belt mounting bolts to 50 N·m)
3. Remove the C-pillar (See C-pillar Trim Panel Remove & Installation in Section 15 Body & Accessories).

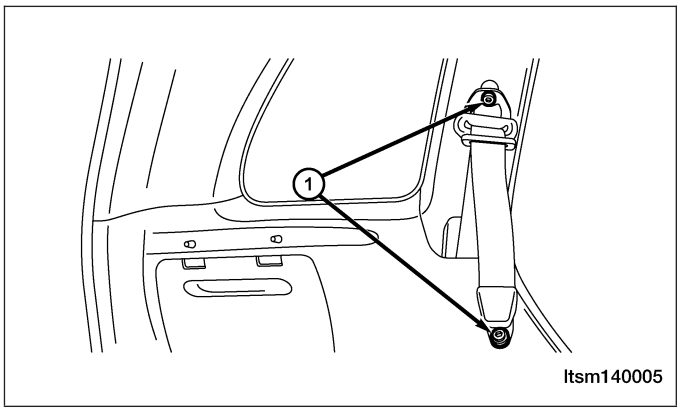

Downloaded from www.Manualslib.com manuals search engine

4. Remove the pre-tensioner mounting bolt (1) and screw (2).

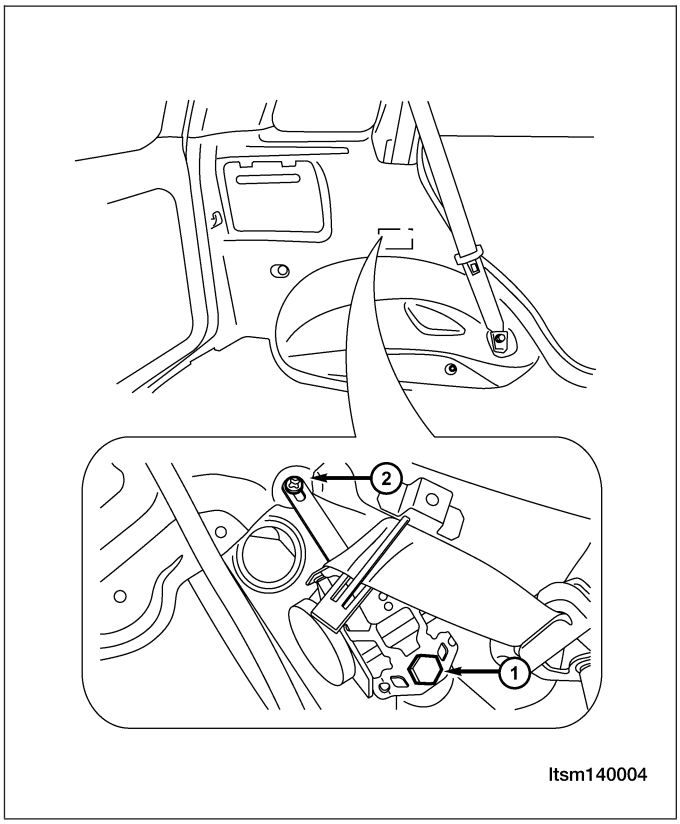

5. Remove the pre-tensioner.
6. Installation is in the reverse order of the removal.

Downloaded from www.Manualslib.com manuals search engine

BODY & ACCESSORIES
15

CONTENTS

page

Body Interior **15-1**

Body Exterior **15-145**

BODY INTERIOR

AUDIO SYSTEM 15-4
Description 15-4
Operation 15-4
Electrical Schematics 15-5

Radio 15-8
Removal & Installation 15-8

6 CD Changer 15-9
Removal & Installation 15-9

Antenna 15-10
Removal & Installation 15-10

BODY INTERIOR TRIM 15-11

A-Pillar Trim Panel 15-11
Removal & Installation 15-11

B-Pillar Lower Trim Panel 15-11
Removal & Installation 15-11

B-Pillar Upper Trim Panel 15-12
Removal & Installation 15-12

C-Pillar Lower Trim Panel 15-12
Removal & Installation 15-12

C-Pillar Upper Trim Panel 15-13
Removal & Installation 15-13

Assist Handle 15-13
Removal & Installation 15-13

Scuff Plate 15-14
Removal & Installation 15-14

Pedal Pad 15-14
Removal & Installation 15-14

Sun Visor 15-14
Removal & Installation 15-14

Headliner 15-15
Removal & Installation 15-15

CAN VEHICLE COMMUNICATIONS 15-16
Description 15-16
Operation 15-16
Electrical Schematics 15-17

CHIME 15-19
Description 15-19
Operation 15-19
Electrical Schematics 15-20

DOOR LOCKS 15-29
Description 15-29
Operation 15-29
Electrical Schematics 15-30

Door Lock Switch 15-35
Removal & Installation 15-35

Door Lock Assembly 15-35
Removal & Installation 15-35
Door Lock Assembly Inspection 15-37

BODY CONTROL MODULE - BCM 15-38
Description 15-38
Operation 15-38
Electrical Schematics 15-39

ON-VEHICLE SERVICE 15-44

Body Control Module (BCM) 15-44
Removal & Installation 15-44

INSTRUMENT PANEL 15-45
Removal & Installation 15-45

Lower Console 15-50
Removal & Installation 15-50

Downloaded from www.Manualslib.com manuals search engine

INSTRUMENT CLUSTER 15-52
Description 15-52
Operation 15-52
Specifications 15-53
Special Tools 15-53
Electrical Schematics 15-54
Instrument Cluster Connector Pin-Out Table 15-62

DIAGNOSIS & TESTING 15-64
Clearing Service Monitor Lamp 15-64
Diagnostic Help 15-64
Intermittent DTC Troubleshooting 15-64
Ground Inspection 15-64
Diagnostic Tools 15-65

Diagnostic Trouble Code (DTC) List 15-65
Instrument Cluster DTC List 15-65

Diagnostic Trouble Code (DTC) Tests 15-66
U029C - Battery Over Voltage Error, U029C - Battery Under Voltage Error 15-66
U040F - Temperature Sensor Shorted To Supply, U040F - Temperature Sensor Shorted To Ground (With Mitsubishi 2.4L Engine System) 15-72
U050F - EEPROM Checksum Error 15-77
U0303 - Fuel Sensor Open Circuit Or Shorted To Supply, U0303 - Fuel Sensor Short To Ground 15-79

ON-VEHICLE SERVICE 15-84

Instrument Cluster 15-84
Removal & Installation 15-84

INTERIOR LAMPS 15-85
Description 15-85
Operation 15-85
Electrical Schematics 15-86

Front Room Lamp 15-91
Removal & Installation 15-91

Middle/Rear Courtesy/Dome Lamp 15-91
Removal & Installation 15-91

Key Hole Lamp 15-92
Removal & Installation 15-92

POWER OUTLET 15-93
Description 15-93
Operation 15-93
Electrical Schematics 15-94
Removal & Installation 15-95

POWER WINDOW 15-96
Description 15-96
Operation 15-96
Electrical Schematics 15-97

Power Window Switch 15-100
Removal & Installation 15-100

Power Window Motor 15-100
Removal & Installation 15-100
Power Window Motor Inspection 15-103

SEATS 15-104

General Information 15-104
Description 15-104
Operation 15-104
Electrical Schematics 15-105

Front Seat 15-106
Removal & Installation 15-106

Rear Seats 15-107
Removal & Installation 15-107

Heated Seat Switch 15-109
Removal & Installation 15-109

Heated Seat Element 15-109
Removal & Installation 15-109

IMMOBILIZER CONTROL MODULE 15-110
Description 15-110
Operation 15-110
Electrical Schematics 15-111
Immobilizer Control Module Connector Pin-Out Table 15-112

DIAGNOSIS & TESTING 15-113
Diagnostic Help 15-113
Intermittent DTC Troubleshooting 15-113
Ground Inspection 15-113
Diagnostic Tools 15-113

Diagnostic Trouble Code (DTC) List 15-114
Immobilizer Control Module DTC List 15-114

Remote Keyless Entry (RKE) Inoperative 15-115
No Response From Remote Keyless Entry (RKE) Transmitter 15-115

Downloaded from www.Manualslib.com manuals search engine

Diagnostic Trouble Code (DTC) Tests 15-117
B1000 - ECU Defect: Internal Errors 15-117
B3042 - W-Line Short Circuit To Ground, B3043 - W-Line Short Circuit To Battery 15-121
B3050 - Relay External Line Short Circuit To Ground Or Open Circuit, Relay External Line Malfunction, B3053 - Relay External Line Short Circuit To Battery 15-126
B3055 - No Transponder Modulation Or No Transponder, B3056 - No Transponder Fixed Code Programmed 15-132
B3060 - Unprogrammed Transponder Fixed Code Received, B3061 - Disturbed Or No Challenge/Response Transponder Communication, B3077 - Read-Only Transponder Detected 15-138

ON-VEHICLE SERVICE 15-144

Immobilizer Control Module 15-144
Removal & Installation 15-144

Downloaded from www.Manualslib.com manuals search engine

AUDIO SYSTEM

Description

The audio system consists of the following components:

- Audio Unit
- Front Speakers
- Front Tweeters
- Rear Speakers
- Window Antenna (audio)

The audio system is standard factory-installed equipment. The system uses an ignition switched source of battery current so that the system will operate when the ignition switch is in the LOCK/ACC/ON positions. The system will also operate in the OFF position for one hour.

Operation

With the audio system on, radio signals are received by the window antenna, the audio unit then sends audio signals to front speakers and rear speakers.

Downloaded from www.Manualslib.com manuals search engine

Electrical Schematics

Audio System (Page 1 of 3)

AUDIO SYSTEM

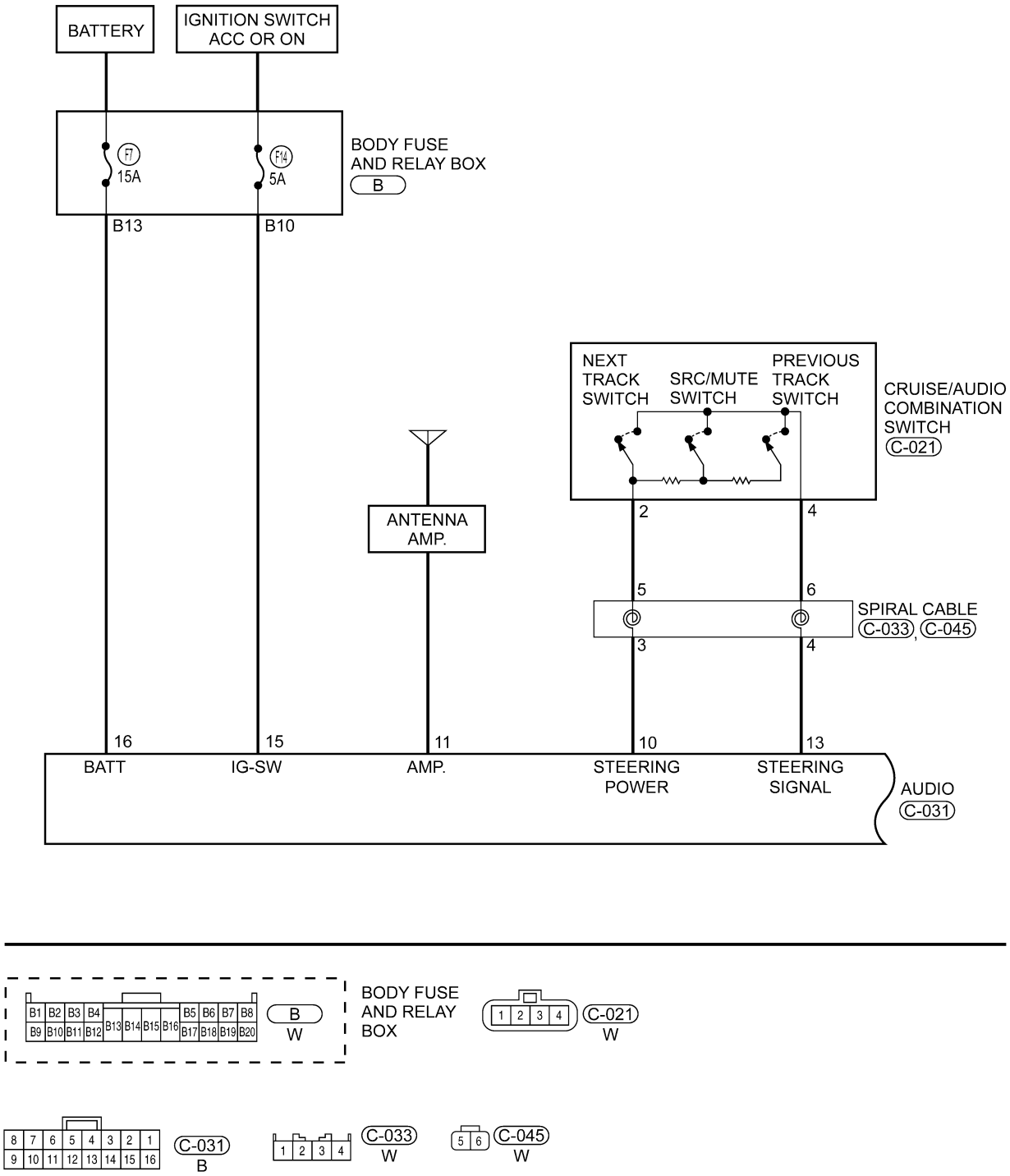

Downloaded from www.Manualslib.com manuals search engine

Audio System (Page 2 of 3)

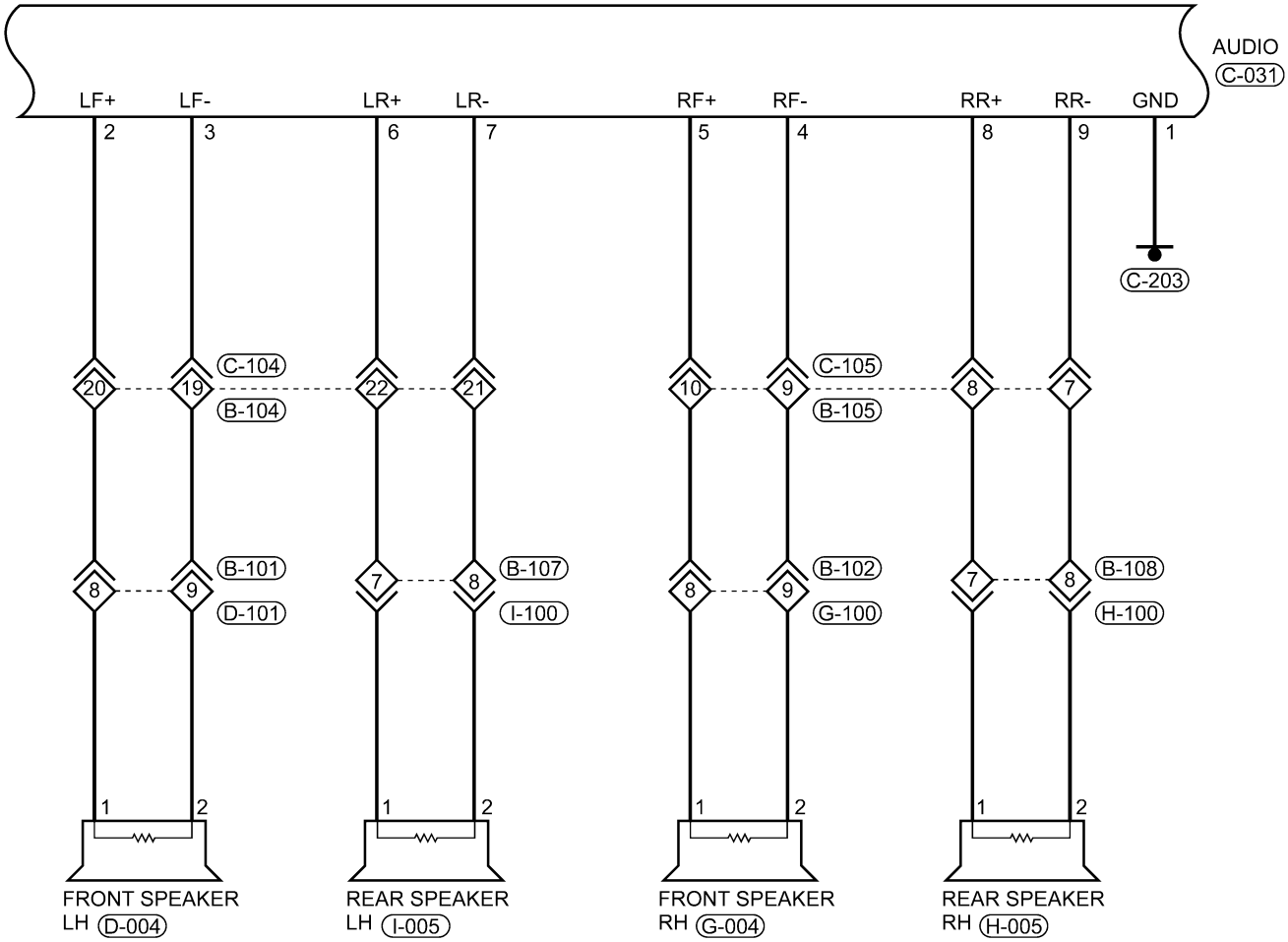

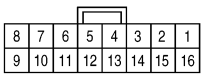
C-031
B

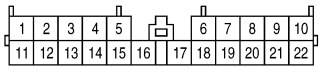
C-104 , C-105
W W

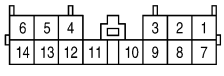
B-101 , B-102 , H-100 , I-100
W W W W

D-004 , G-004 , I-005 , H-005
B B B B

ltsmw150002t

Downloaded from www.Manualslib.com manuals search engine

Audio System (Page 3 of 3)

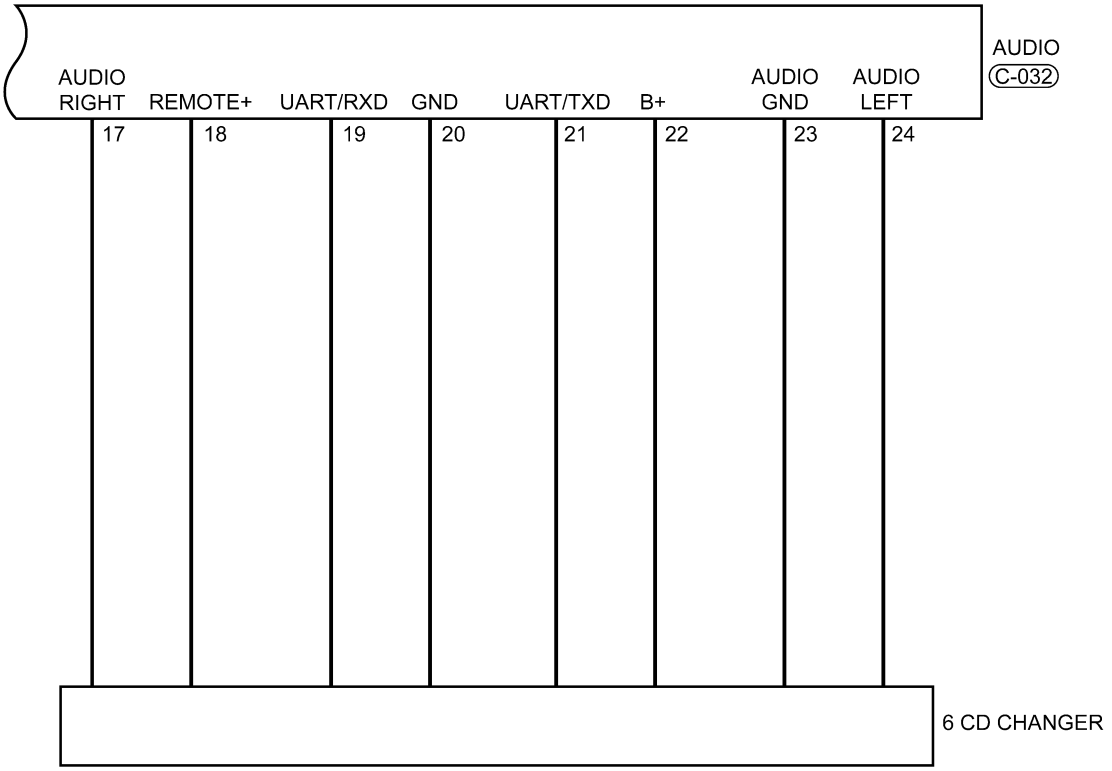

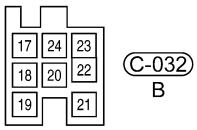

ltsmw150085t

Downloaded from www.Manualslib.com manuals search engine

Radio

Removal & Installation

1. Lift one corner of the radio trim cover with a trim stick, and remove the radio trim cover.

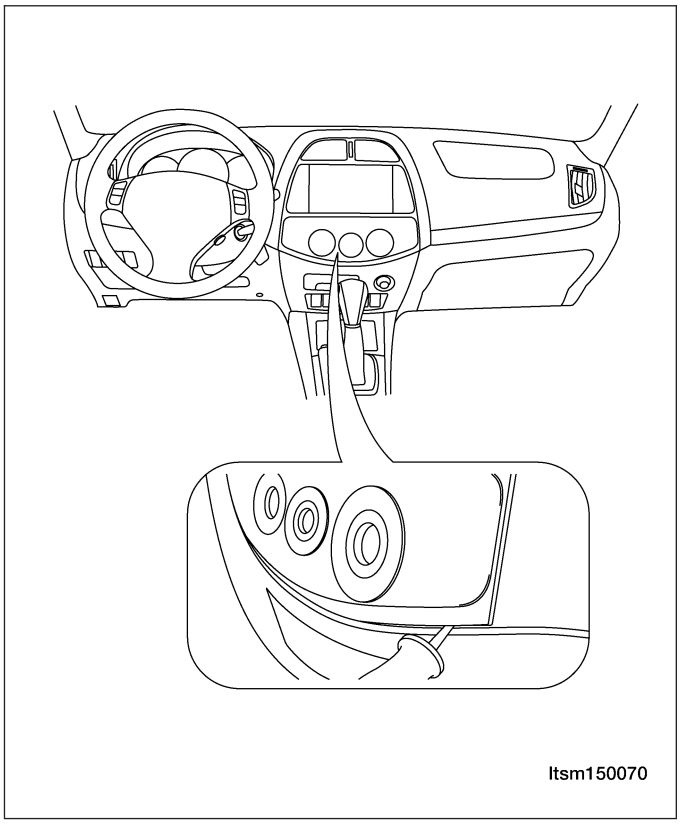

2. Remove the radio mounting bolts (1) from the radio.
   (Tighten: Radio mounting bolts to 9 ± 3 N·m)

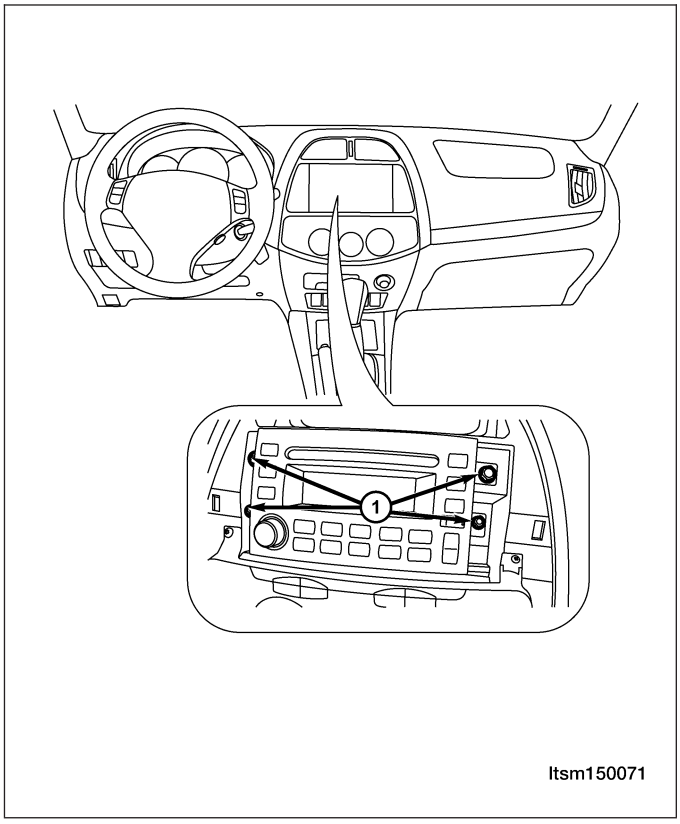

Downloaded from www.Manualslib.com manuals search engine

3. Disconnect the electrical connectors.
4. Remove the radio.
5. Installation is in the reverse order of removal.

6 CD Changer

Removal & Installation

1. Remove the passenger seat.
2. Remove the CD changer 4 mounting bolts (1). (Tighten: CD changer mounting bolts to 9 ± 3 N·m)
3. Disconnect the CD changer electrical connector (2).

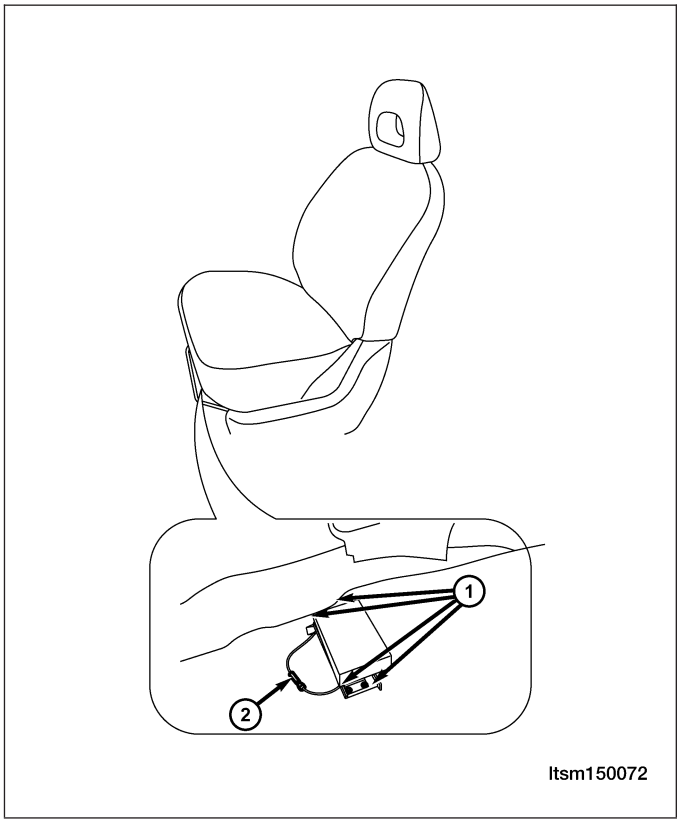

4. Remove the CD changer.
5. Installation is in the reverse order of removal.

Downloaded from www.Manualslib.com manuals search engine

Antenna

Removal & Installation

1. Disconnect the negative battery cable.
2. Pull the rear edge of the headliner down.
3. Disconnect the antenna electrical connector.
4. Remove the antenna mounting nut (1).

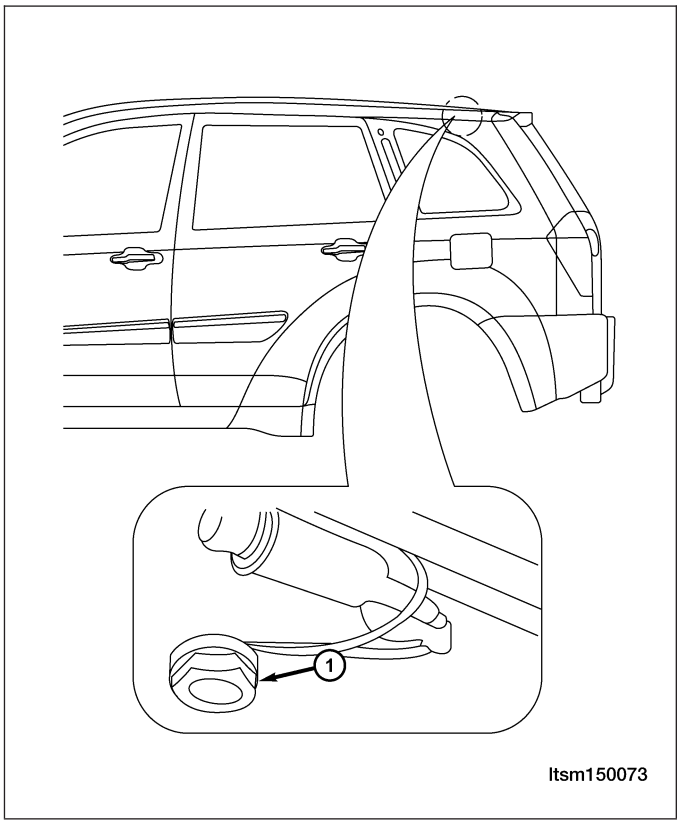

5. Installation in the reverse order of removal.

Downloaded from www.Manualslib.com manuals search engine

BODY INTERIOR TRIM

A-Pillar Trim Panel

Removal & Installation

1. Grasp the trim panel and gently pull it away to release the retaining clips.
2. Using a trim stick, remove the A-pillar trim panel.
3. Installation is in the reverse order of removal.

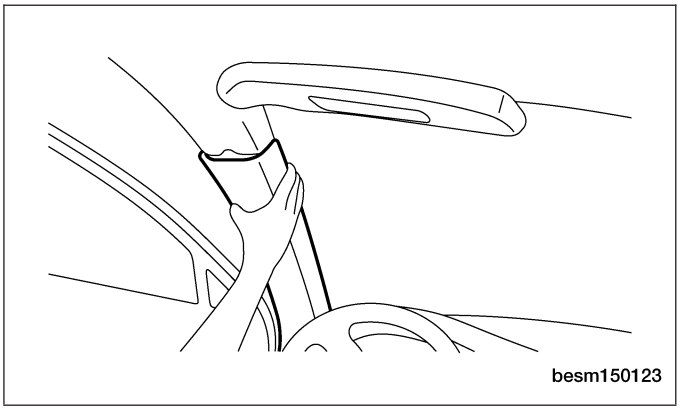

Installation Notes:

- The A-pillar trim panel retaining clips should be installed to allow the trim panel to fit tightly between the headliner and the weatherstrip.

B-Pillar Lower Trim Panel

Removal & Installation

1. Remove the front seat belt lower mounting bolt (1).

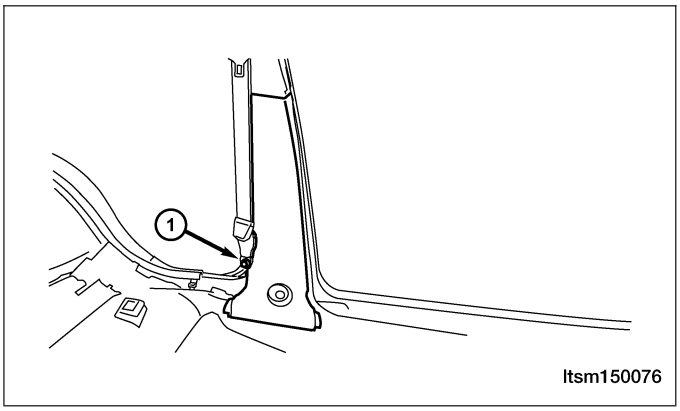

2. Using a trim stick, remove the lower trim panel from the B-pillar.
3. Installation is in the reverse order of removal.

Downloaded from www.Manualslib.com manuals search engine

B-Pillar Upper Trim Panel

Removal & Installation

1. Remove the front seat belt upper mounting bolt (1).

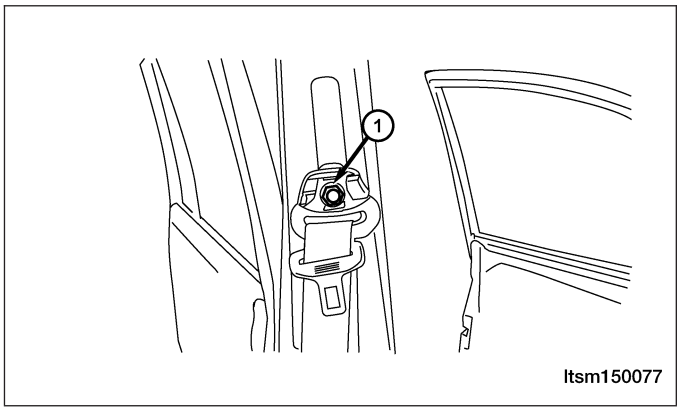

2. Using a trim stick, remove the B-pillar upper trim panel.
3. Installation is in the reverse order of removal.

C-Pillar Lower Trim Panel

Removal & Installation

1. Remove the rear seat belt mounting bolt (2).
2. Remove the mounting screws (1) under the panel.

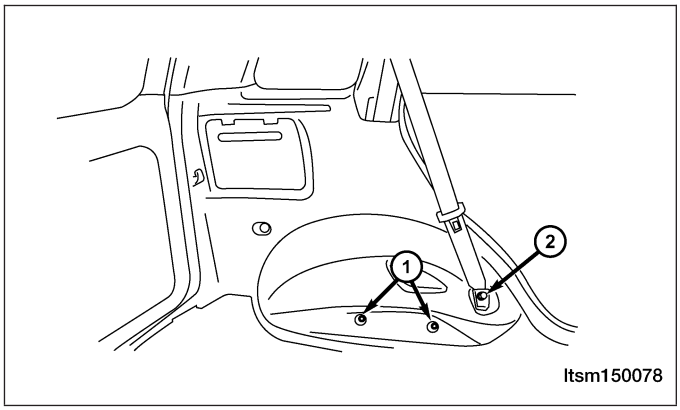

3. Remove the storage box.
4. Disconnect the power outlet electrical connector.
5. Using a trim stick, remove the lower trim panel.
6. Installation is in the reverse order of removal.

Downloaded from www.Manualslib.com manuals search engine

C-Pillar Upper Trim Panel

Removal & Installation

1. Remove the C-Pillar lower trim panel (See C-Pillar Lower Trim Panel Removal & Installation in Section 15 Body & Accessories).
2. Remove the rear seat belt mounting bolts (1).

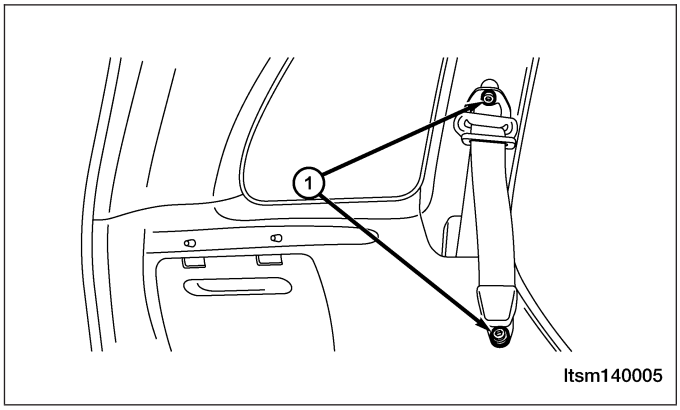

3. Using a trim stick, remove the C-Pillar upper trim panel.
4. Installation is in the reverse order of removal.

Assist Handle

Removal & Installation

1. Remove the assist handle mounting screws trim cover from the assist handles.
2. Remove the mounting screws (1).
   (Tighten: Assist handle screws to 2 N·m)
3. Remove the assist handle.
4. Installation is in the reverse order of removal.

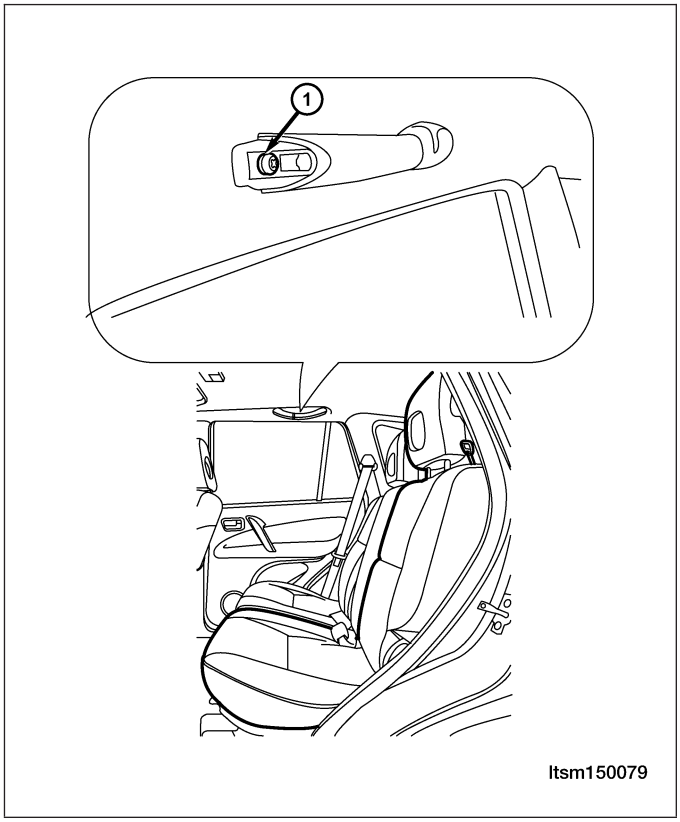

Downloaded from www.Manualslib.com manuals search engine

Scuff Plate

Removal & Installation

1. Grasp the scuff plate and gently pull it away to release the retaining clips.
2. Using a trim stick, remove the scuff plate from the front door sill.
3. Installation is in the reverse order of removal.

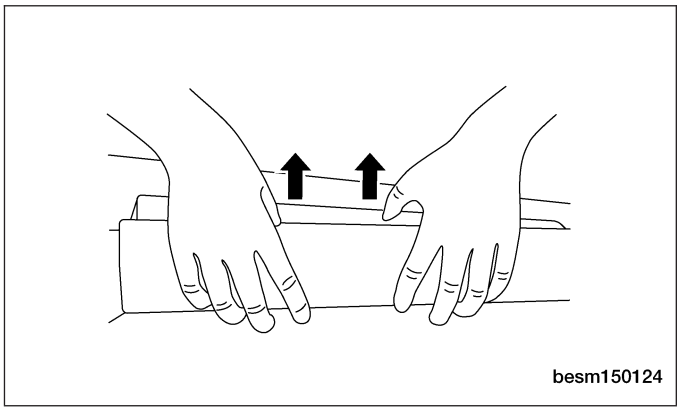

Pedal Pad

Removal & Installation

1. Remove the pedal pad mounting screws.
2. Remove the pedal pad.
3. Installation is in the reverse order of removal.

Sun Visor

Removal & Installation

1. Remove the two sun visor mounting screws (1). (Tighten: Sun visor screws to 2 N·m)

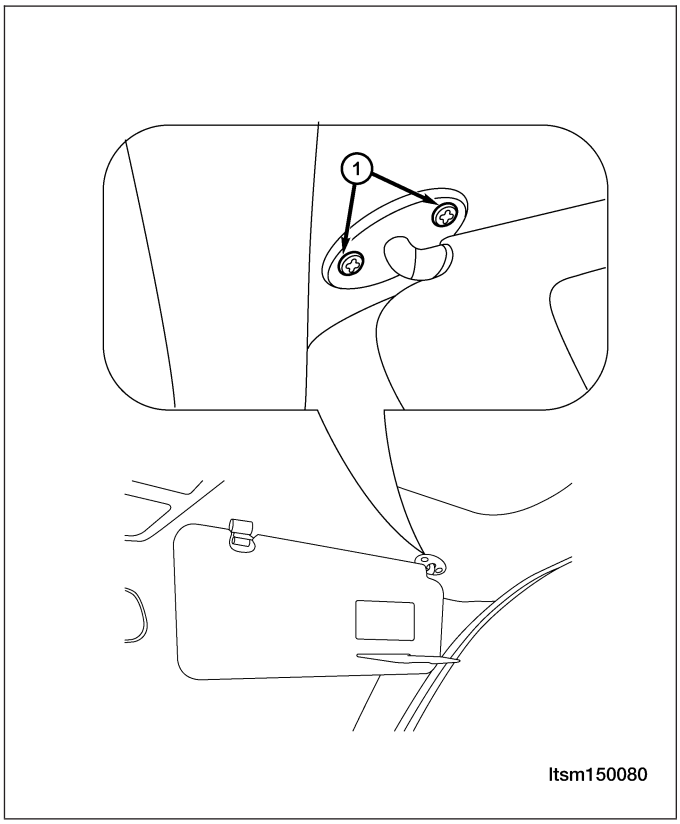

2. Remove the sun visor.

Downloaded from www.Manualslib.com manuals search engine

3. Installation is in the reverse order of removal.

Headliner

Removal & Installation

1. Remove the assist handles (See Assist Handle Removal & Installation in Section 15 Body & Accessories).
2. Remove the courtesy lamps.
3. Remove the air discharge cover.
4. Remove the trim panels from the A, B and C pillars.
5. Pry the headliner retainer clips from the mounting brackets.
6. Remove the headliner (1).

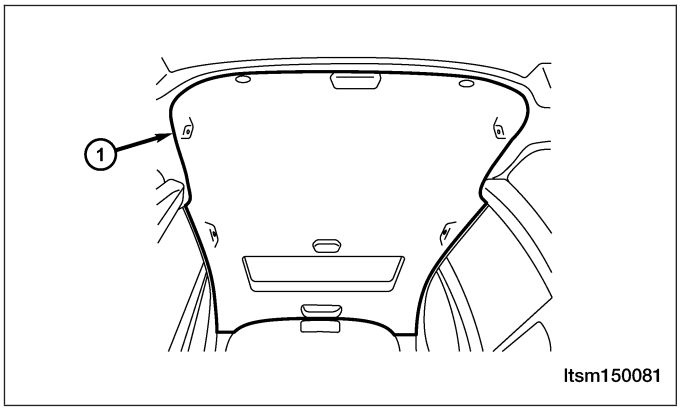

7. Installation is in the reverse order of removal.

Downloaded from www.Manualslib.com manuals search engine

CAN VEHICLE COMMUNICATIONS

Description

Controller Area Network (CAN) communication is a multiplex communication system. The CAN system allows the vehicles electronic modules to transmit and receive data. The following electronic modules are located on the CAN network:

- Transaxle Control Module (TCM)
- Engine Control Module (ECM)
- CAN Converter

Operation

The CAN network uses a twisted pair of circuits to transmit data (+) and data (-). The data (+) and the data (-) circuits are each regulated to approximately 2.5 volts during neutral or rested network traffic. As bus messages are sent on the data (+) circuit, voltage is increased by approximately 1.0 volt. Inversely, the data (-) circuit is reduced by approximately 1.0 volt when a bus message is sent. Multiple bus messages can be sent over the CAN circuits allowing multiple modules to communicate with each other.

Downloaded from www.Manualslib.com manuals search engine

Electrical Schematics

CAN Vehicle Communications (Page 1 of 2)

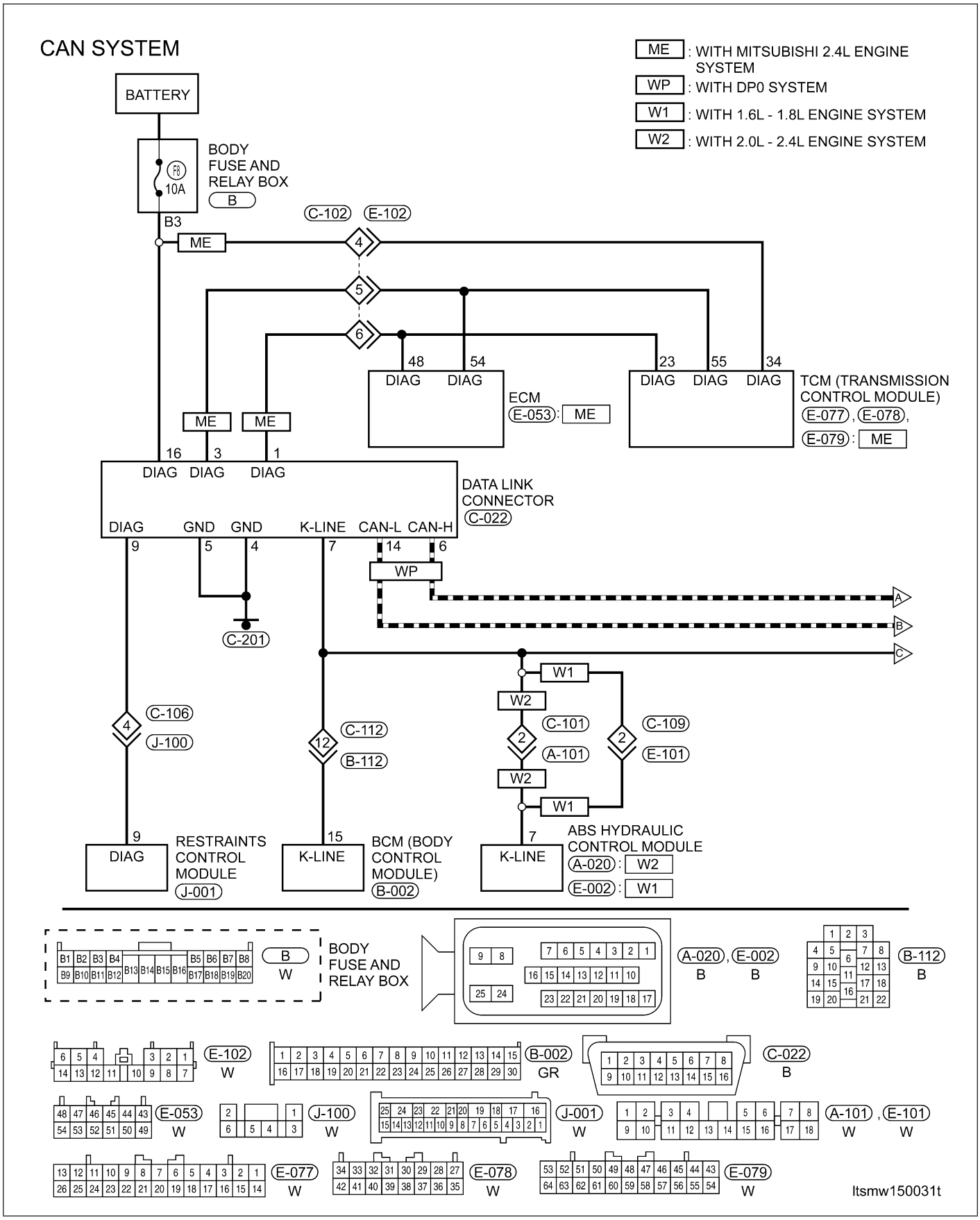

Downloaded from www.Manualslib.com manuals search engine

CAN Vehicle Communications (Page 2 of 2)

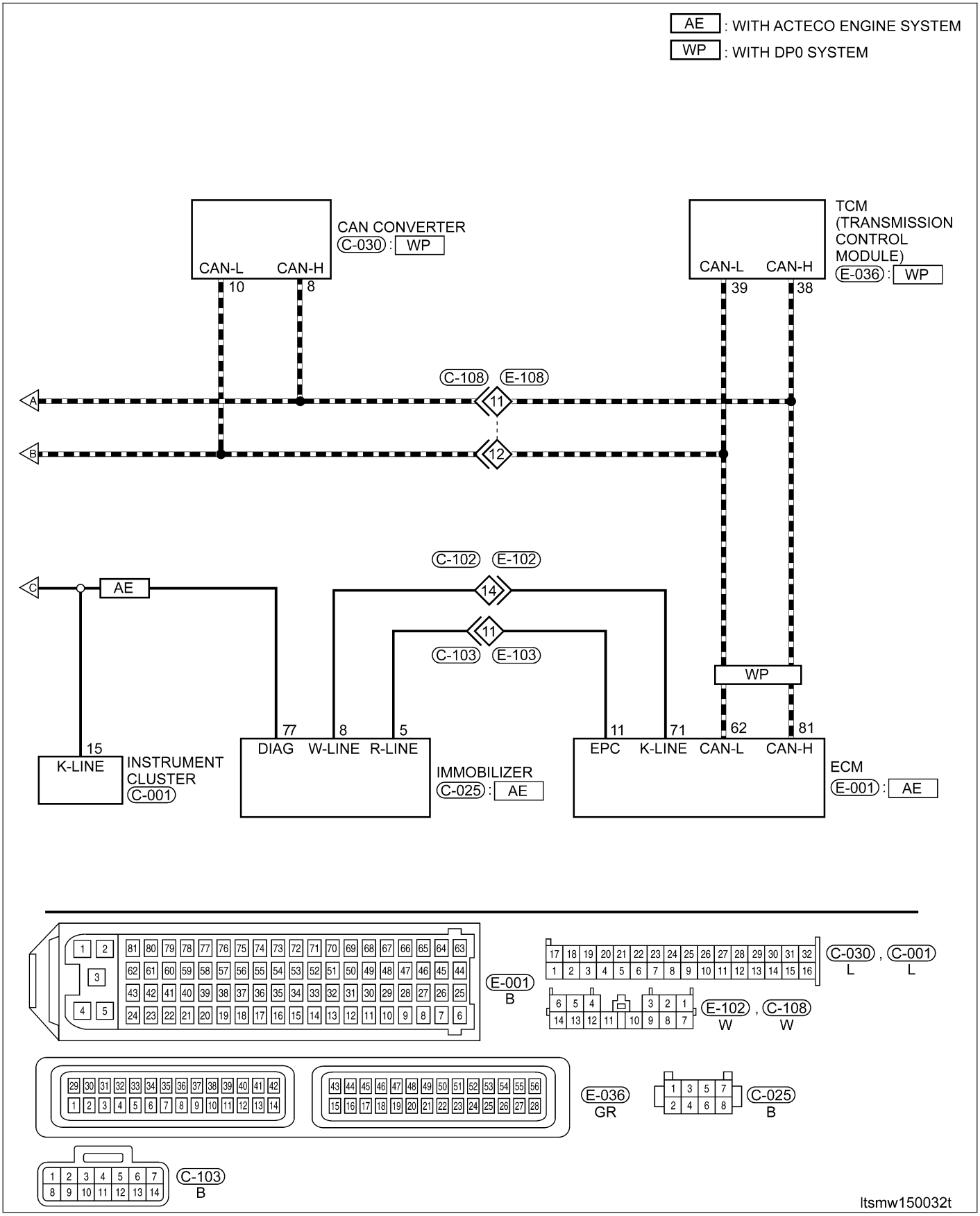

Downloaded from www.Manualslib.com manuals search engine

CHIME

Description

The chime is located in the Instrument Cluster (IC). The chime warning system is an audible notification to the driver. The chime warning system is designed to alert the driver of a vehicle problem or condition.

Operation

The Instrument Cluster (IC) uses hard wired inputs from various sensors and switches to activate the chime. The sensors and switches are located throughout the vehicle. The following conditions will cause the chime to operate:

- Turn signal on
- Hazard warning flashers on
- Seat belt unbuckled
- Low fuel level
- Low oil pressure
- Low brake fluid level
- Doors unlocked

Downloaded from www.Manualslib.com manuals search engine

Electrical Schematics

Chime (Page 1 of 9)

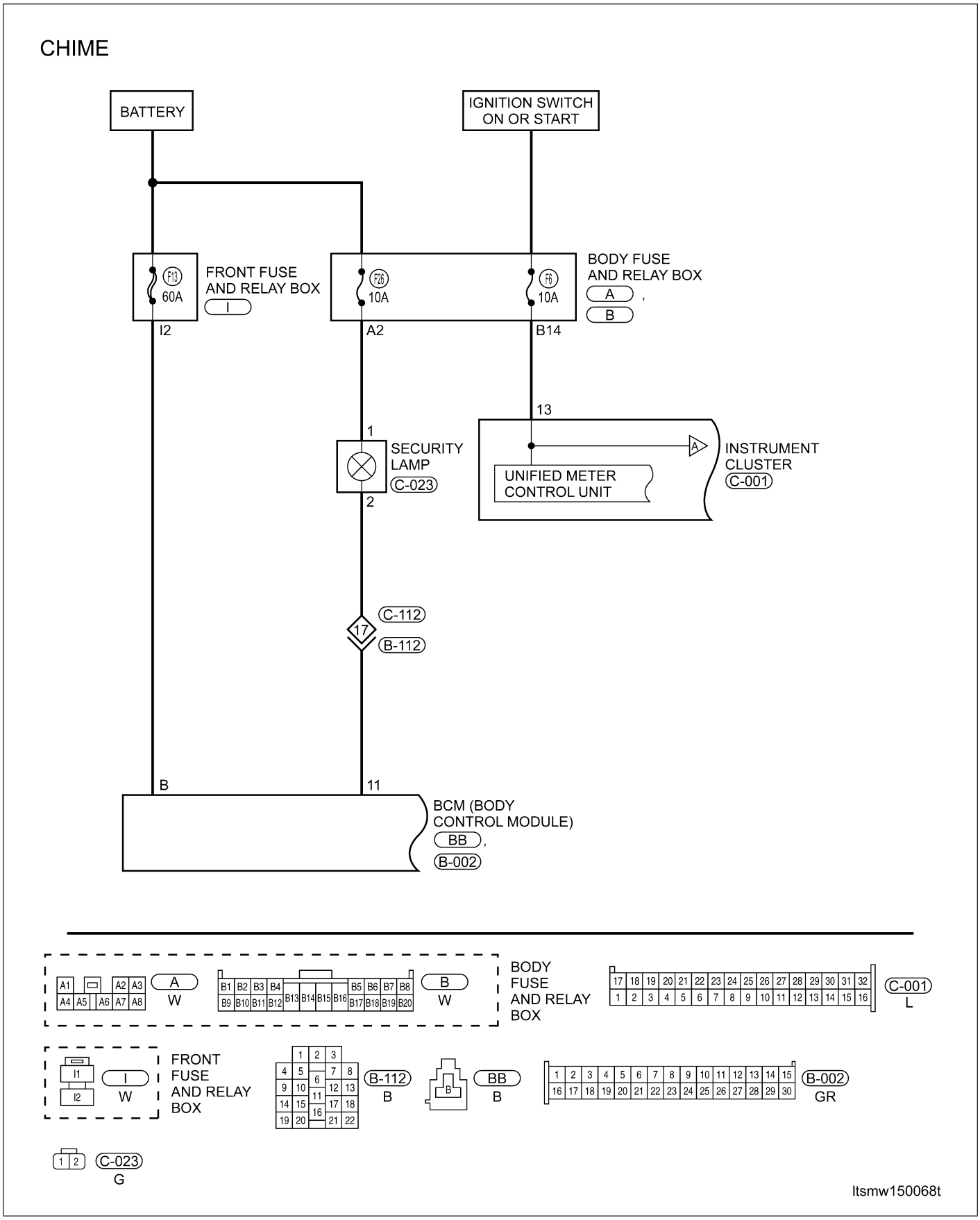

Downloaded from www.Manualslib.com manuals search engine

Chime (Page 2 of 9)

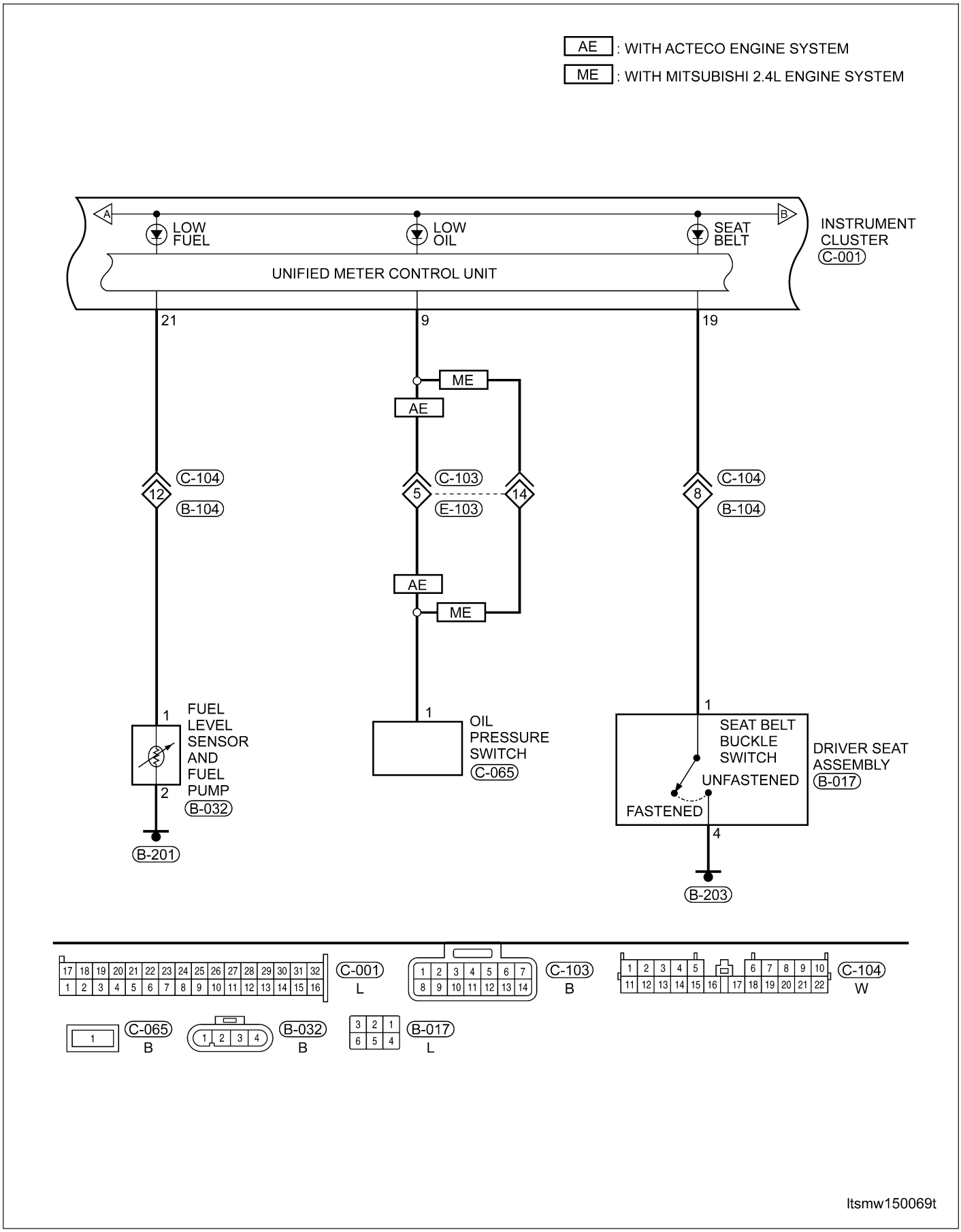

Downloaded from www.Manualslib.com manuals search engine

Chime (Page 3 of 9)

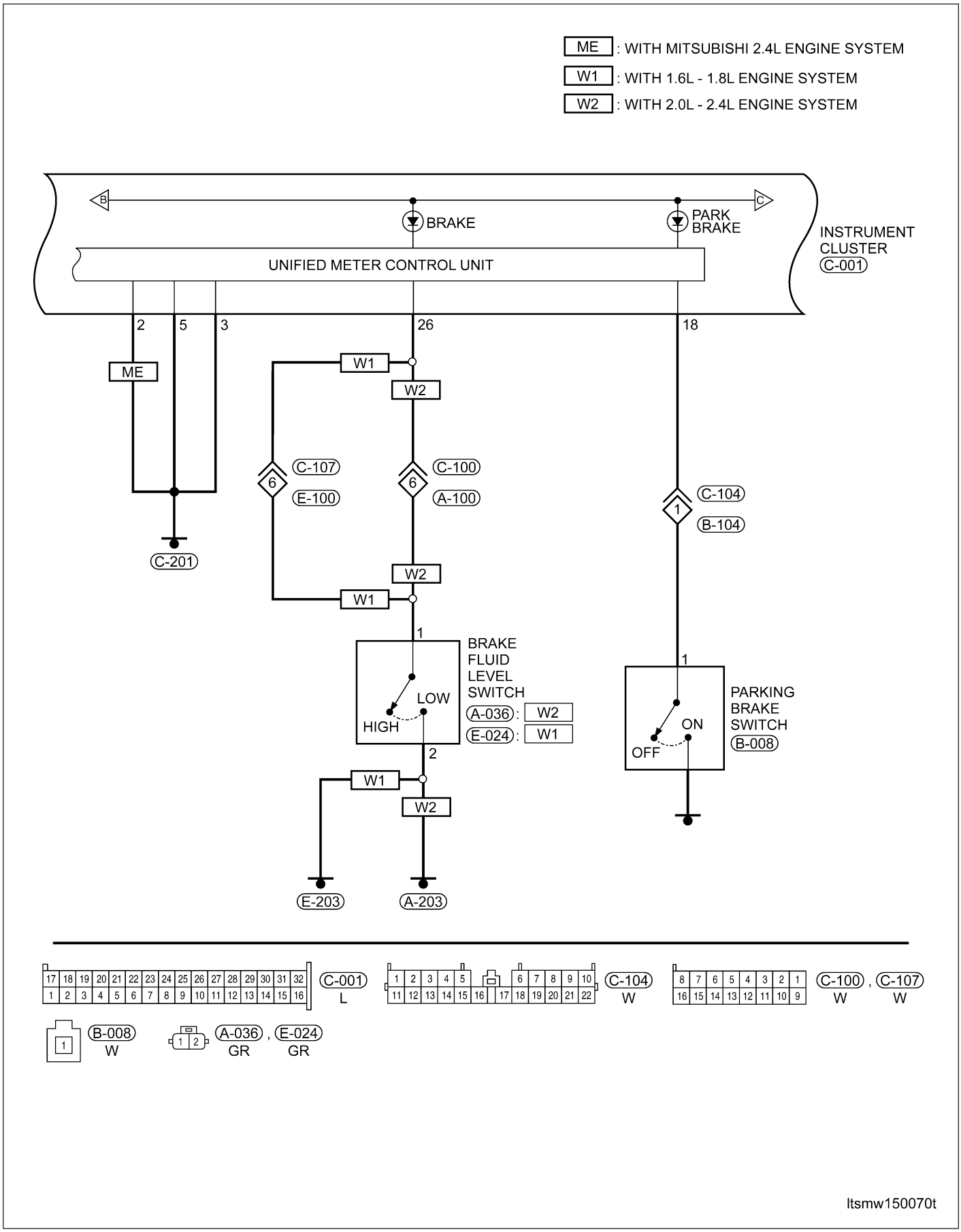

Downloaded from www.Manualslib.com manuals search engine

Chime (Page 4 of 9)

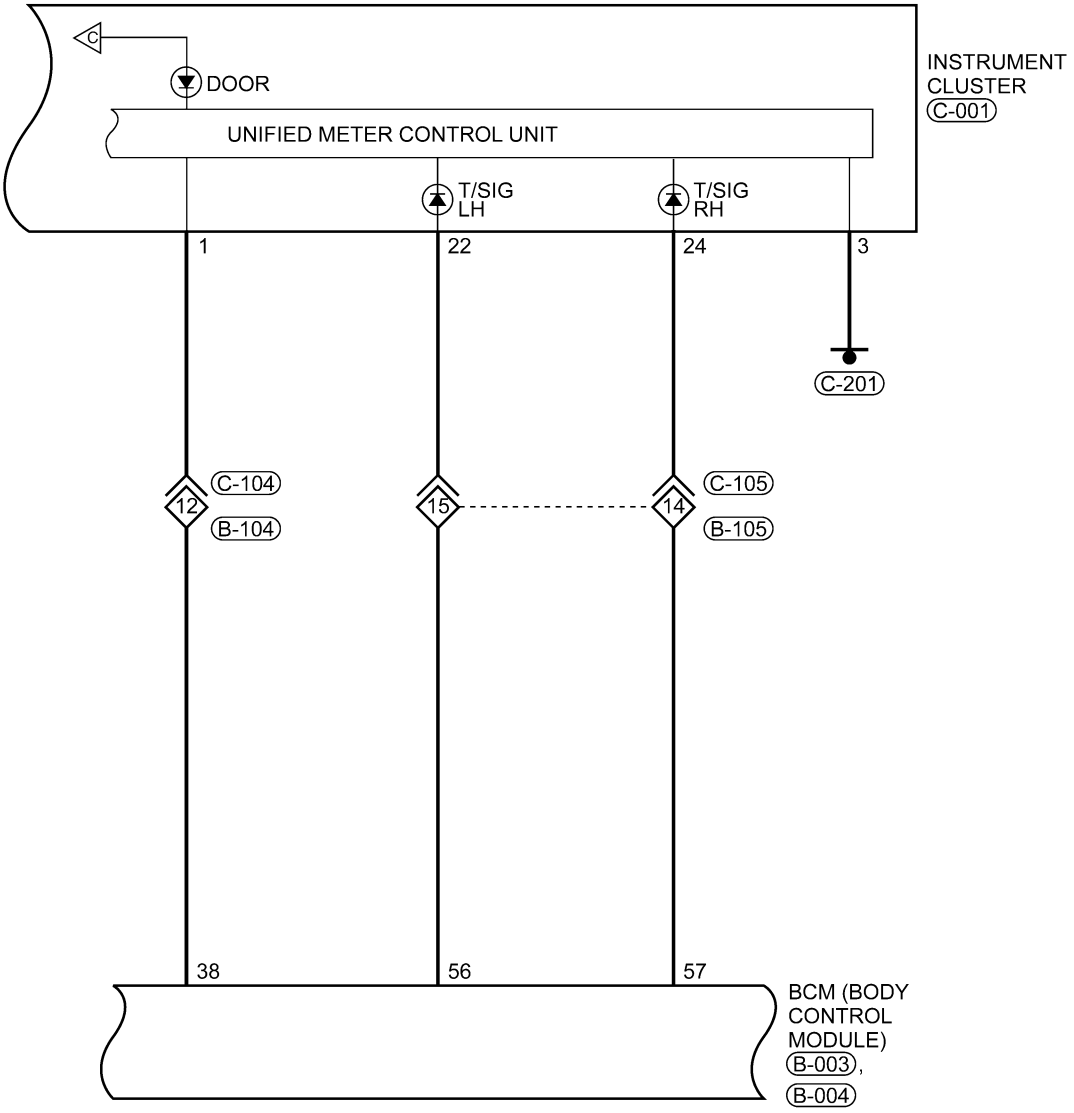

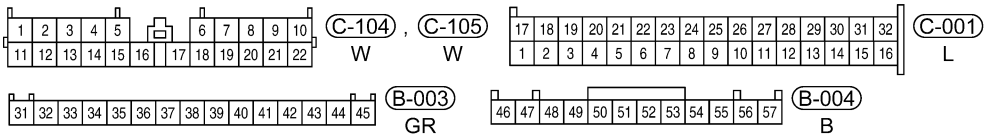

ltsmw150071t

Downloaded from www.Manualslib.com manuals search engine

Chime (Page 5 of 9)

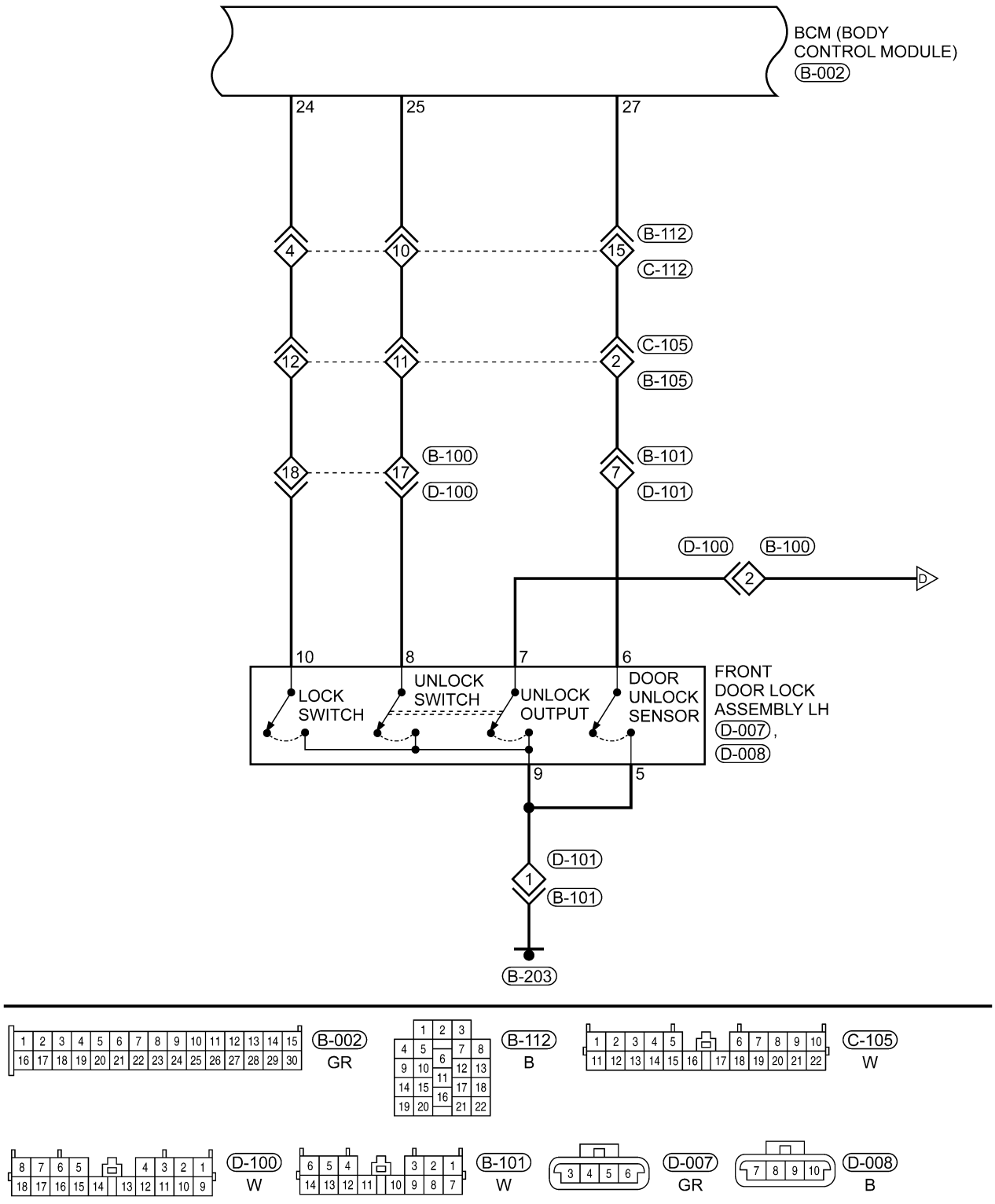

Downloaded from www.Manualslib.com manuals search engine

Chime (Page 6 of 9)

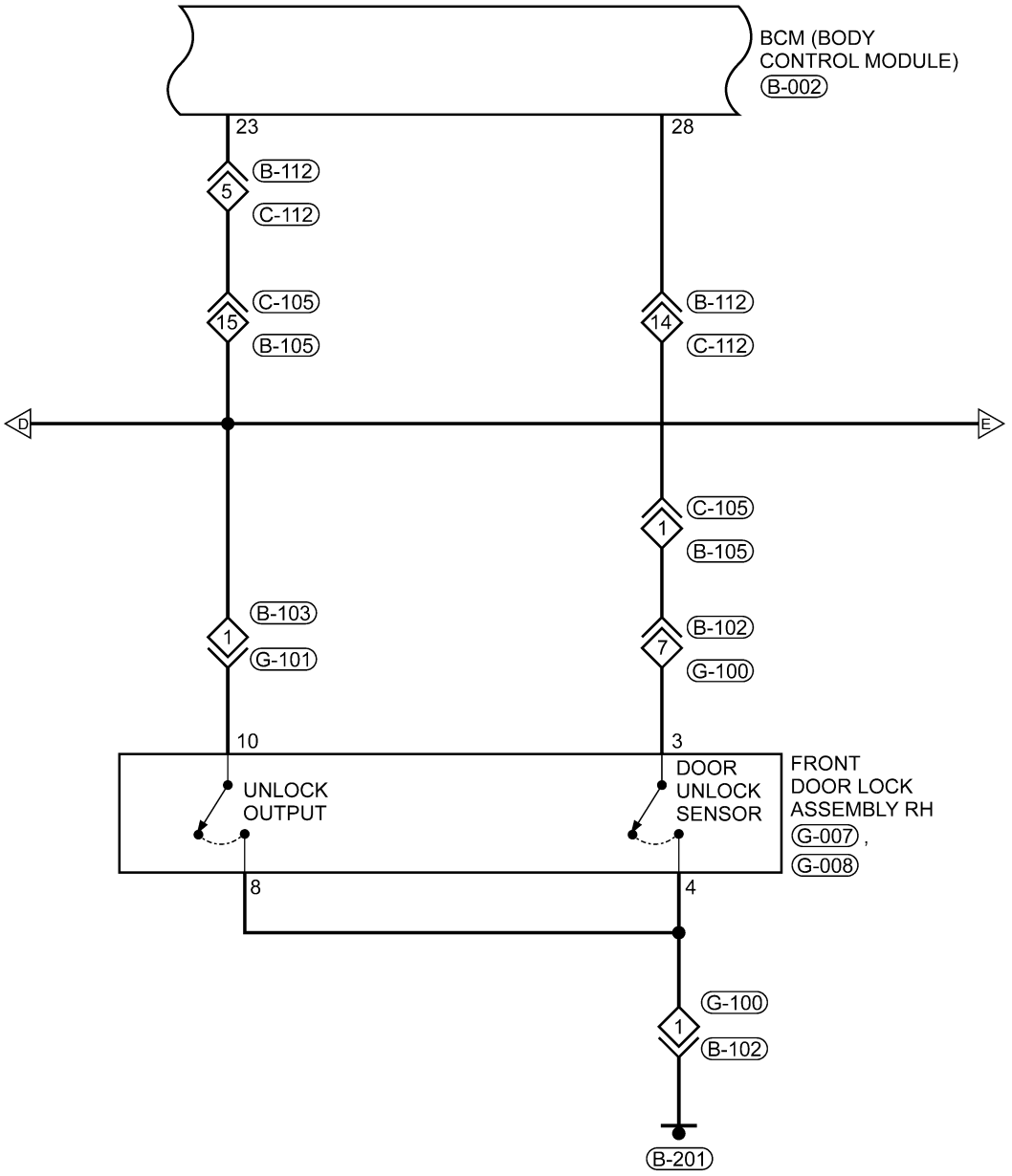

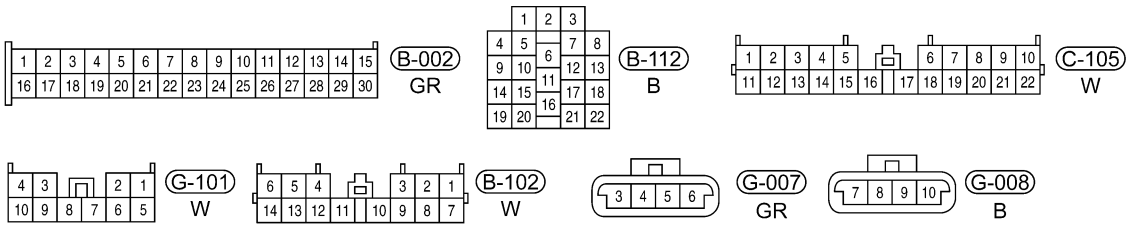

ltsmw150073t

Downloaded from www.Manualslib.com manuals search engine

Chime (Page 7 of 9)

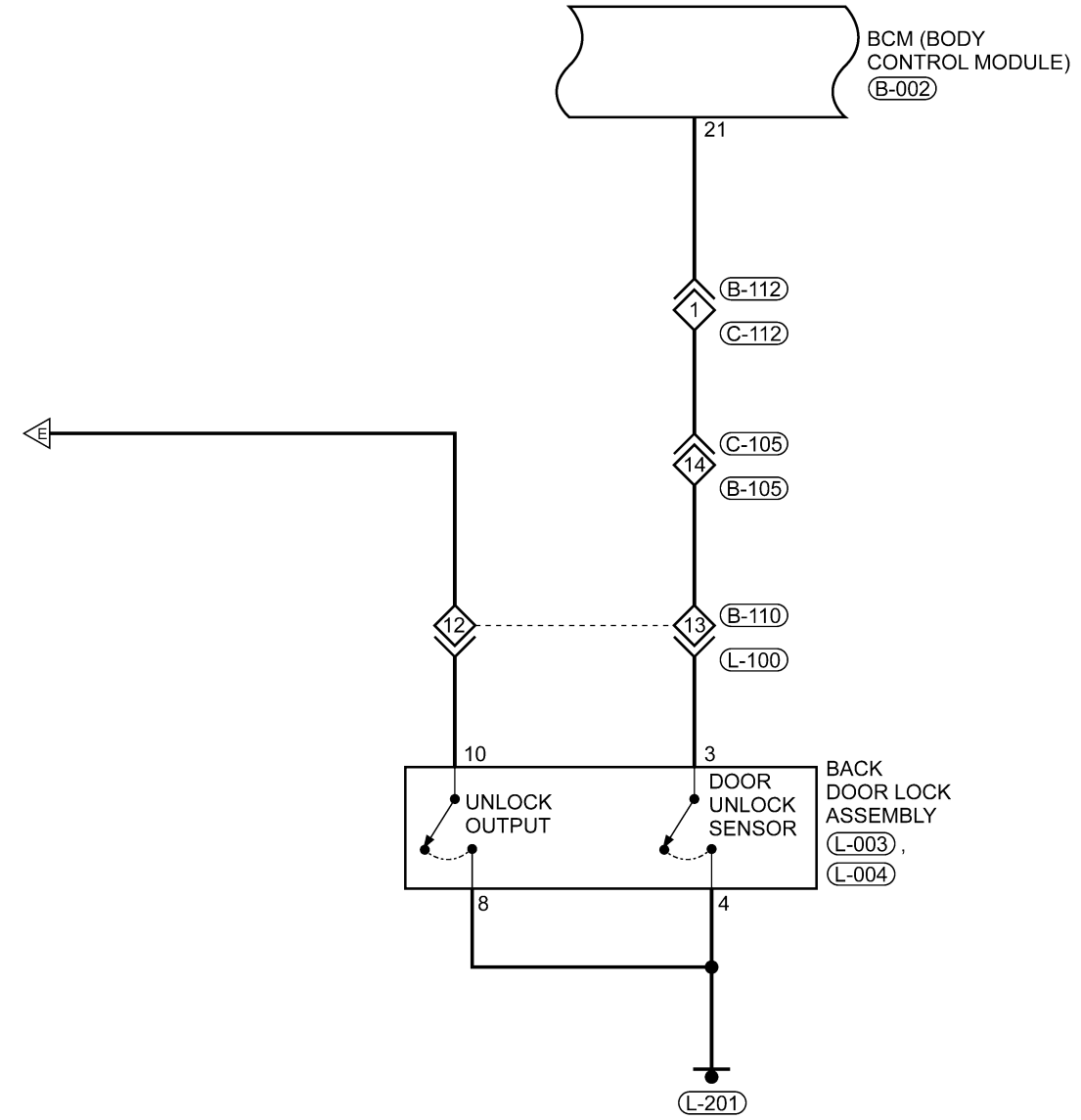

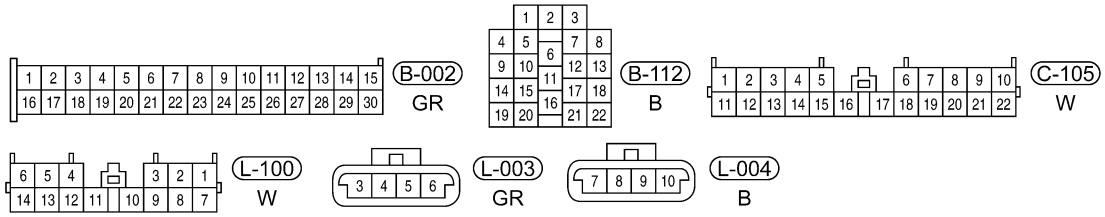

ltsmw150074t

Downloaded from www.Manualslib.com manuals search engine

Chime (Page 8 of 9)

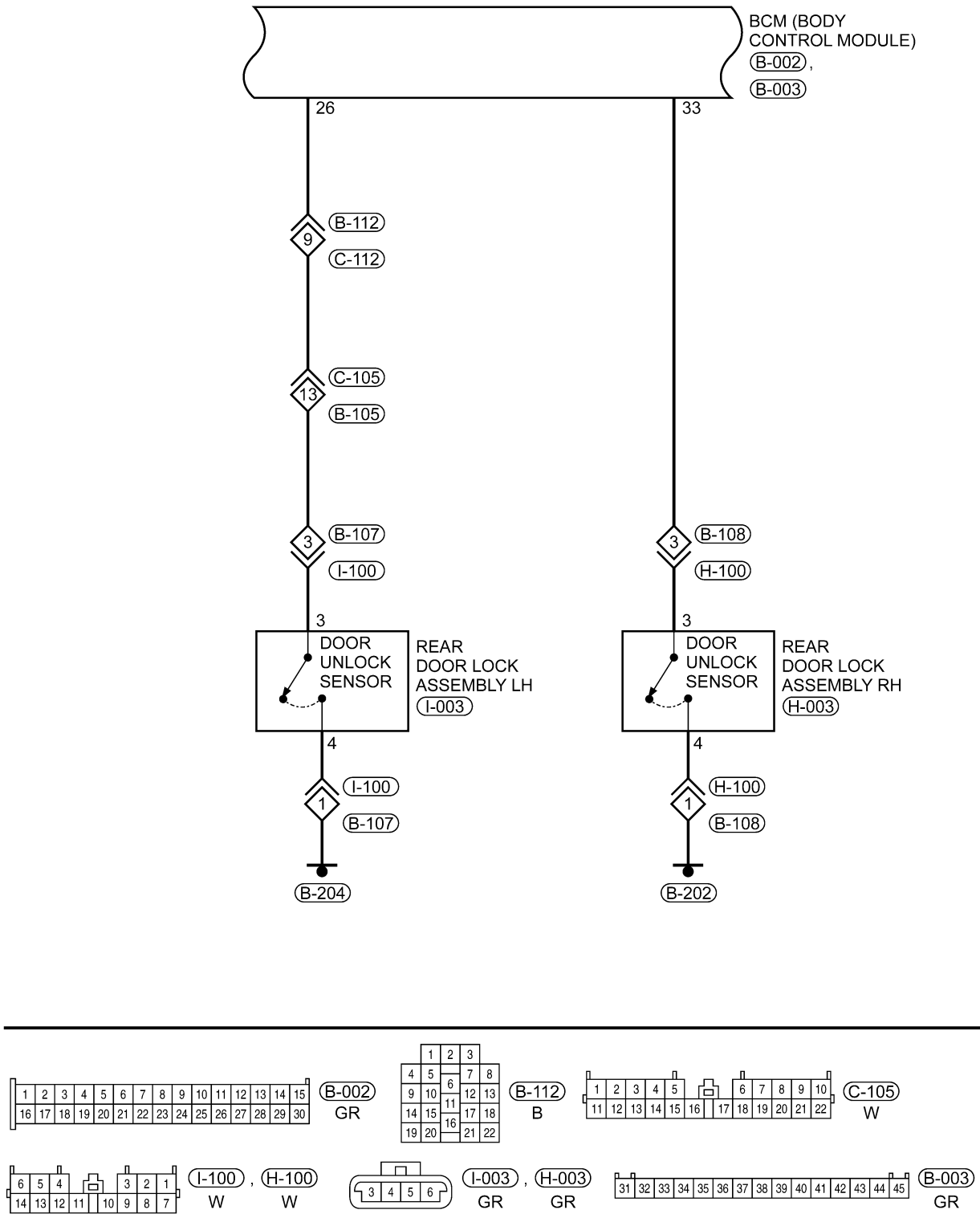

ltsmw150075t

Downloaded from www.Manualslib.com manuals search engine

Chime (Page 9 of 9)

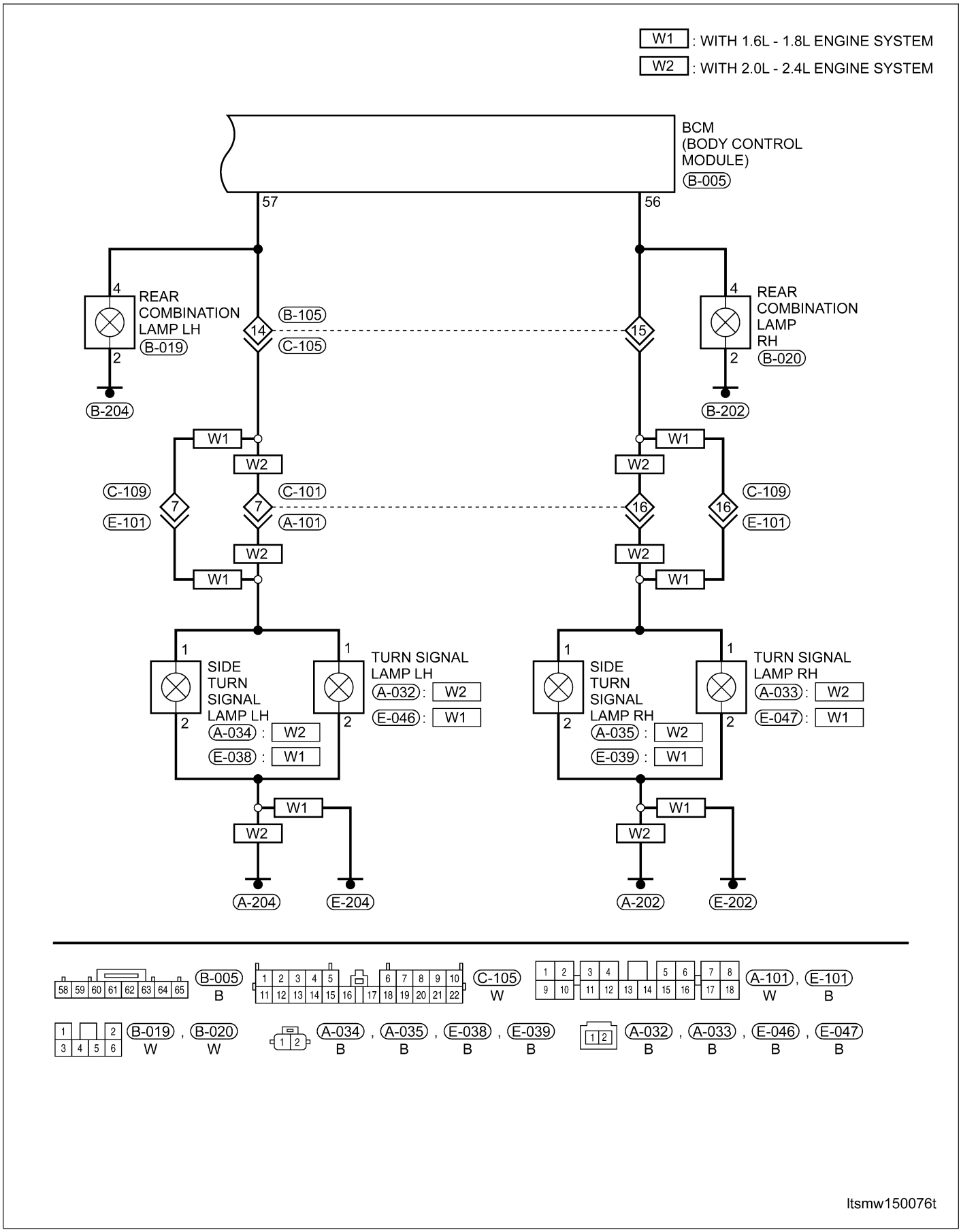

Downloaded from www.Manualslib.com manuals search engine

DOOR LOCKS

Description

The power door locks allow the doors to be locked or unlocked electronically. The power door lock switch is located on the front door trim panel. The power door locks can also be operated by the Remote Keyless Entry (RKE) transmitter.

Operation

The power lock system receives non-switched battery current, so that the power locks remain operational, regardless of the ignition switch position. The power lock system is controlled by BCM.

Downloaded from www.Manualslib.com manuals search engine

Electrical Schematics

Power Door Lock System (Page 1 of 5)

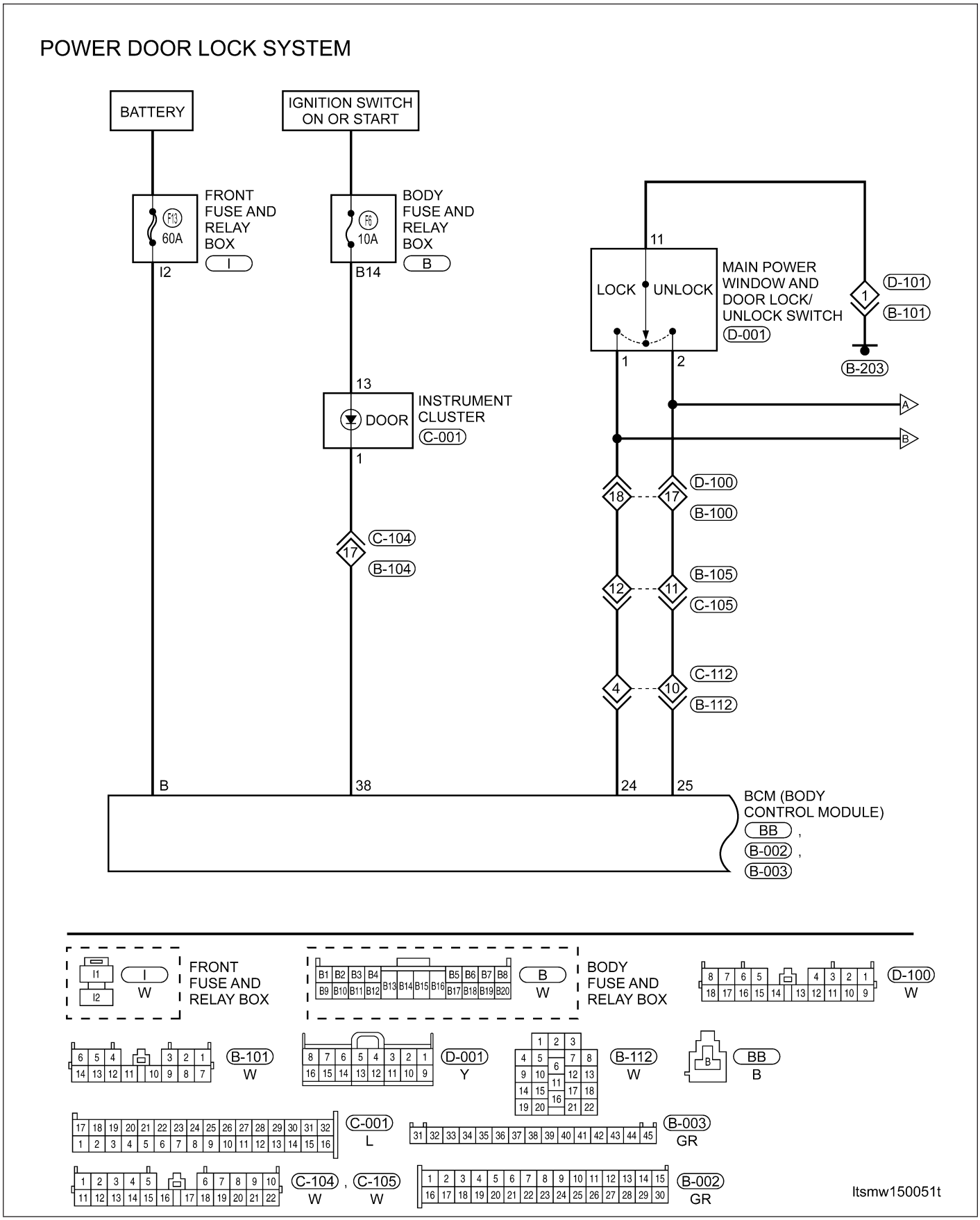

Downloaded from www.Manualslib.com manuals search engine

Power Door Lock System (Page 2 of 5)

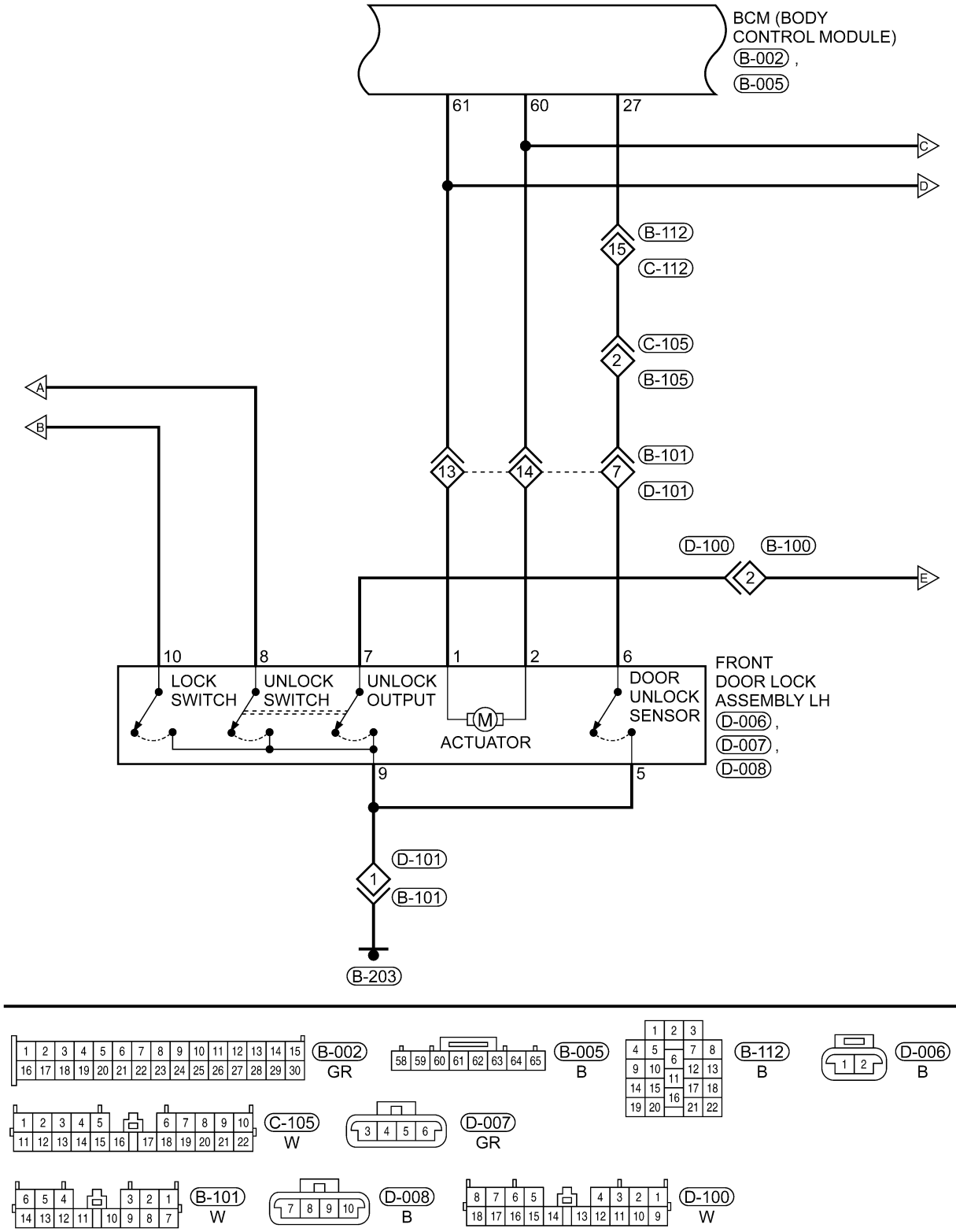

ltsmw150052t

Downloaded from www.Manualslib.com manuals search engine

Power Door Lock System (Page 3 of 5)

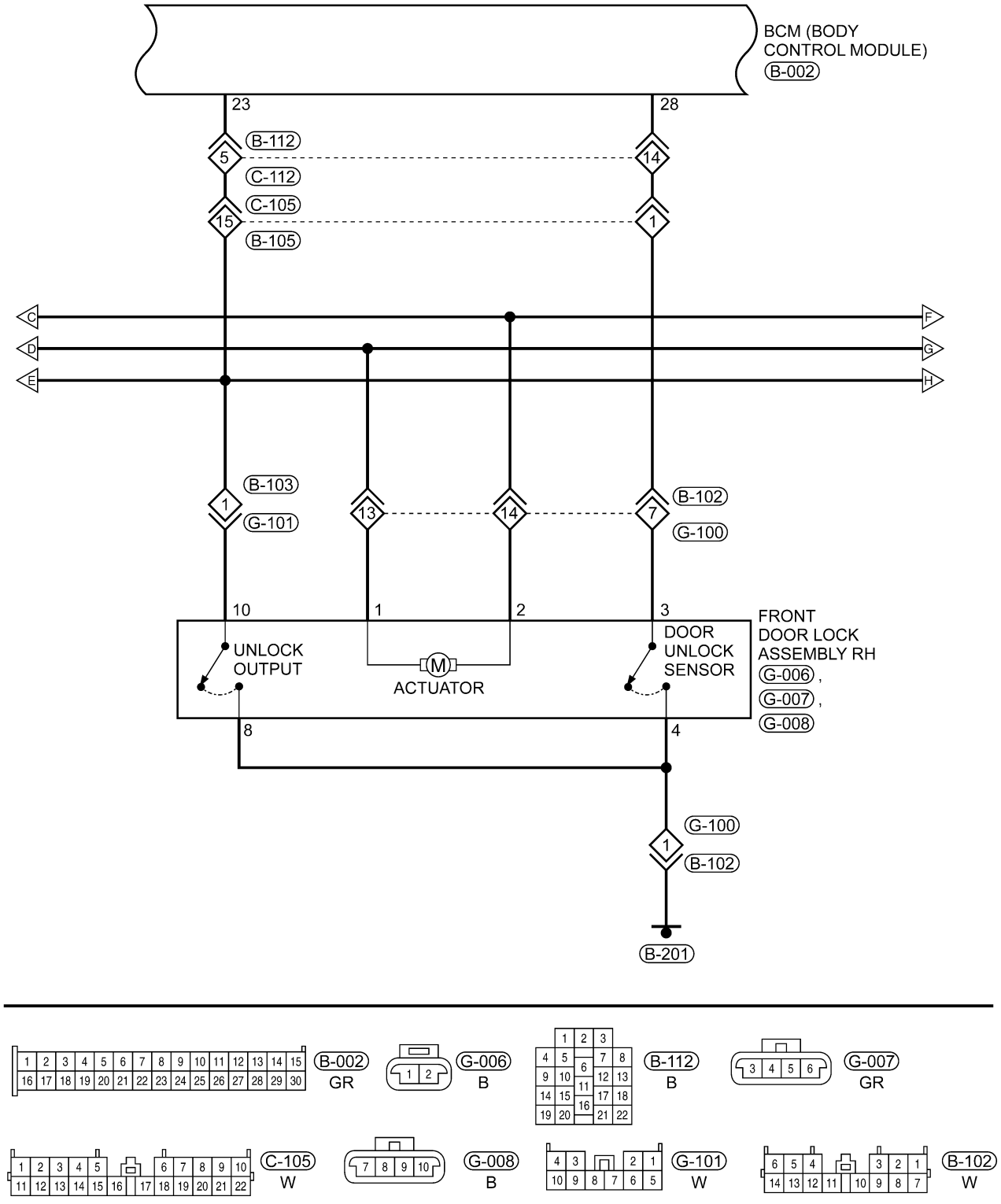

ltsmw150053t

Downloaded from www.Manualslib.com manuals search engine

Power Door Lock System (Page 4 of 5)

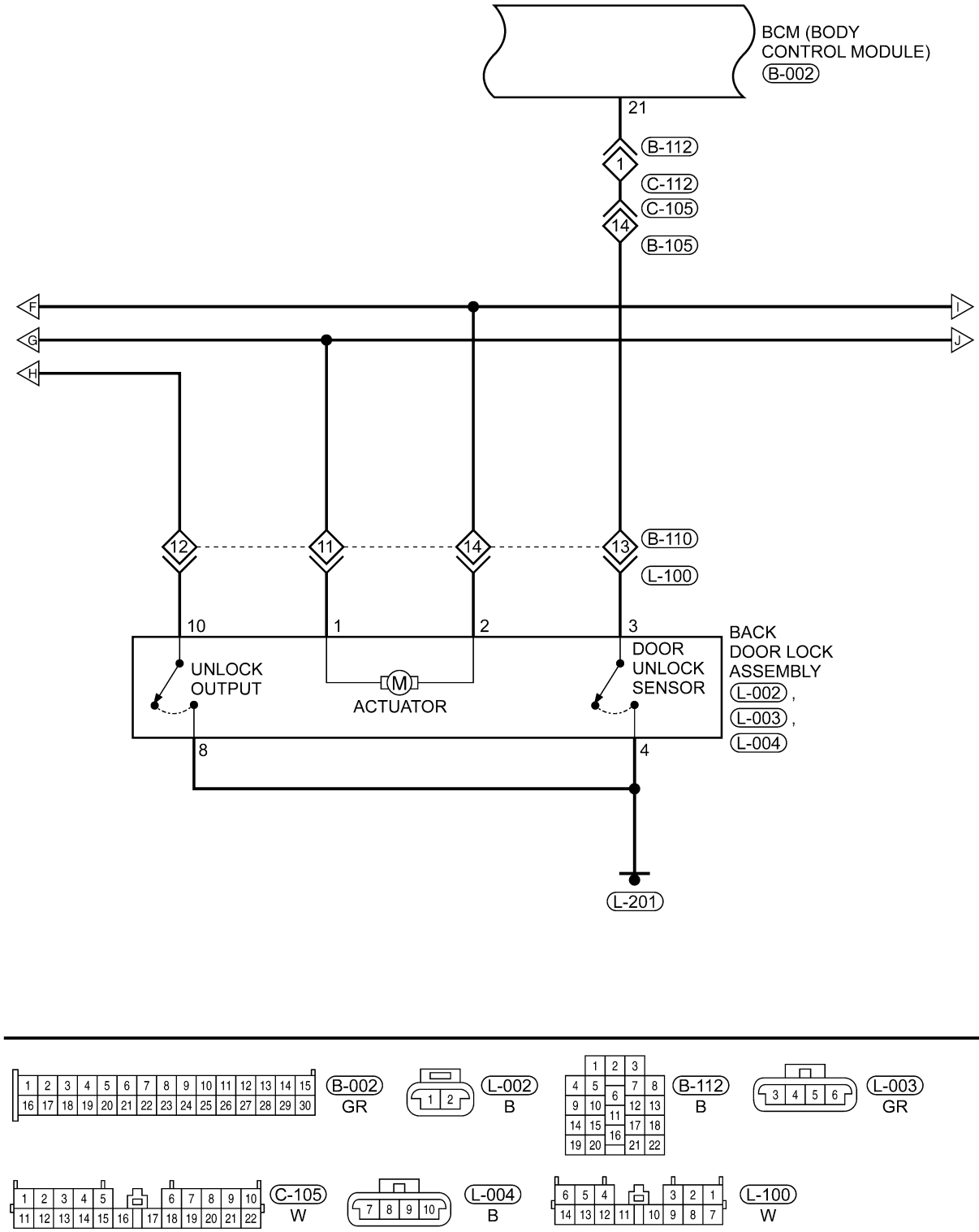

ltsmw150054t

Downloaded from www.Manualslib.com manuals search engine

Power Door Lock System (Page 5 of 5)

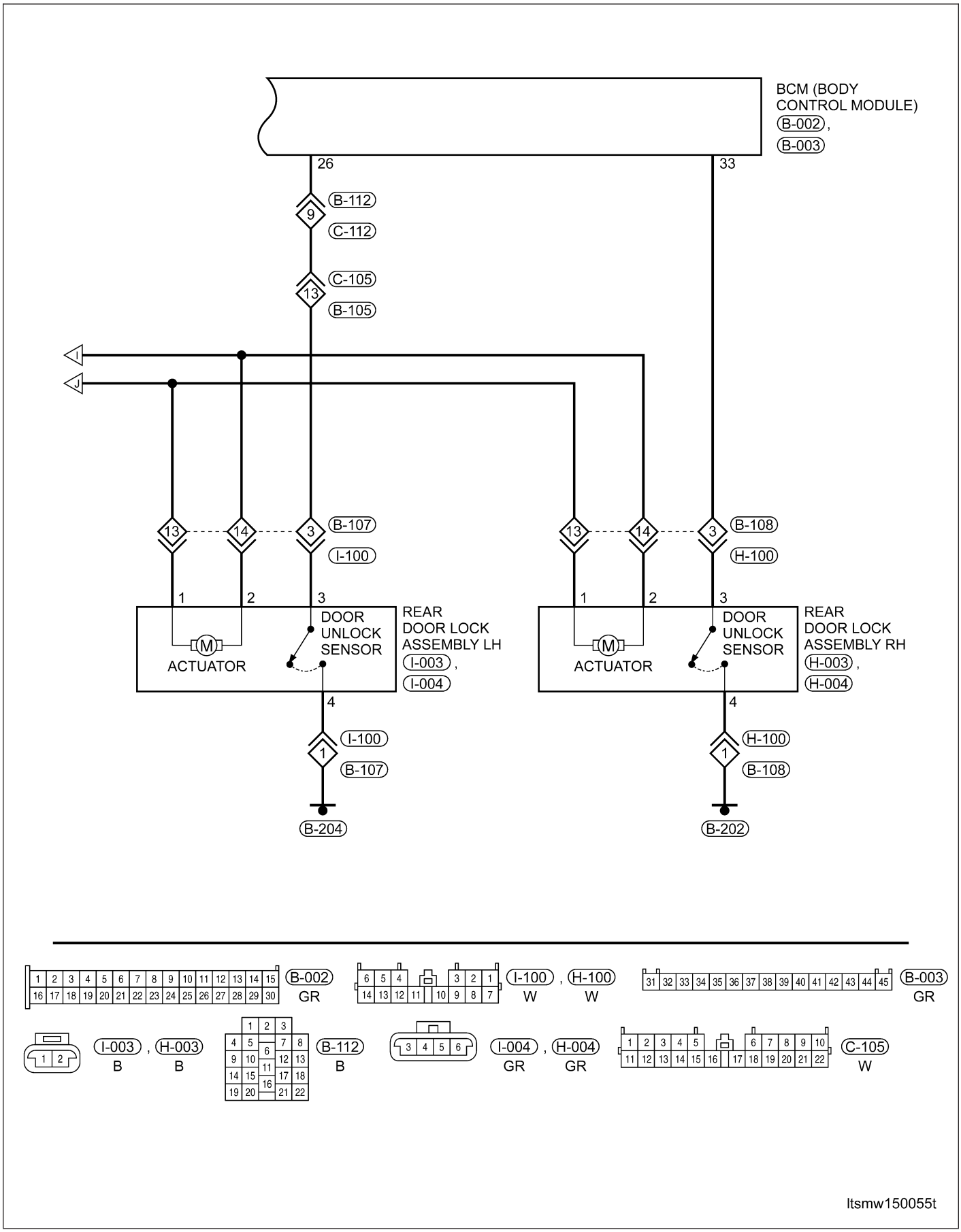

Downloaded from www.Manualslib.com manuals search engine

Door Lock Switch

Removal & Installation

1. Turn the ignition switch off.
2. Remove the power window and door lock/unlock switch bezel mounting screw (1).

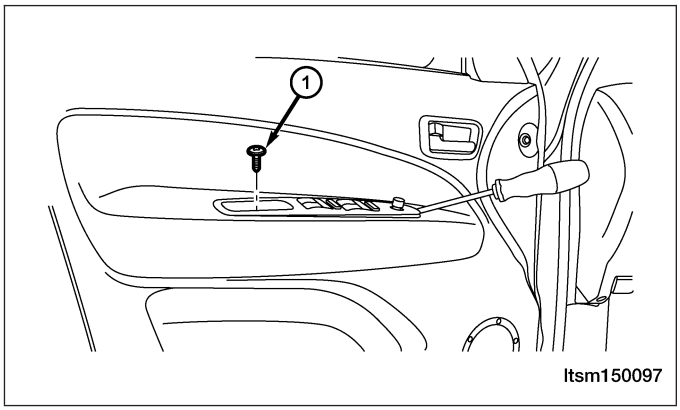

3. Using a trim stick, pry out the power window and door lock/unlock switch assembly from the front door.
4. Disconnect the power window and door lock/unlock switch electrical connectors.
5. Remove the power window and door lock/unlock switch retaining screws to remove the power window and door lock/unlock switch.
6. Installation is in the reverse order of removal

Door Lock Assembly

Removal & Installation

NOTE :
The passenger door is shown, all other doors are similar.

1. Disconnect the negative battery cable.
2. Turn the ignition switch off.
3. Using a small trim stick, remove the pull handle cover (1) from the pull handle (2).

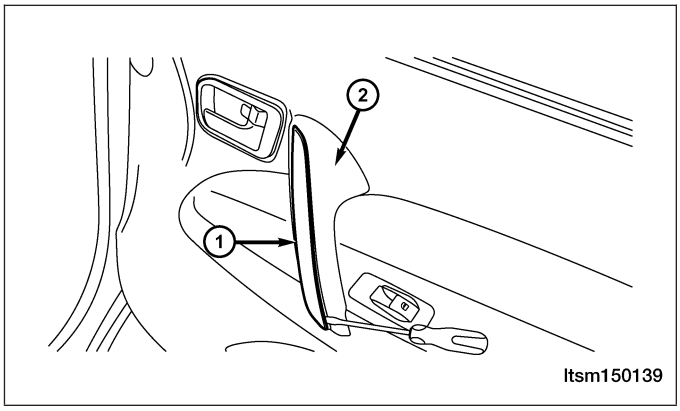

Downloaded from www.Manualslib.com manuals search engine

4. Remove the inner door handle mounting screw (1).
5. Remove the pull handle mounting screws (2).

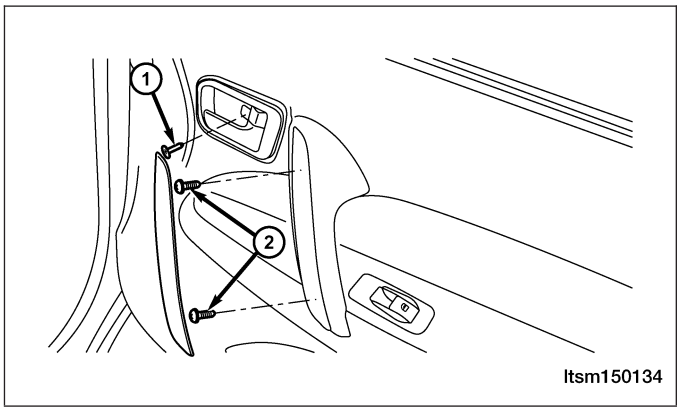

6. Using a small trim stick, remove the inner door handle trim bezel (1).

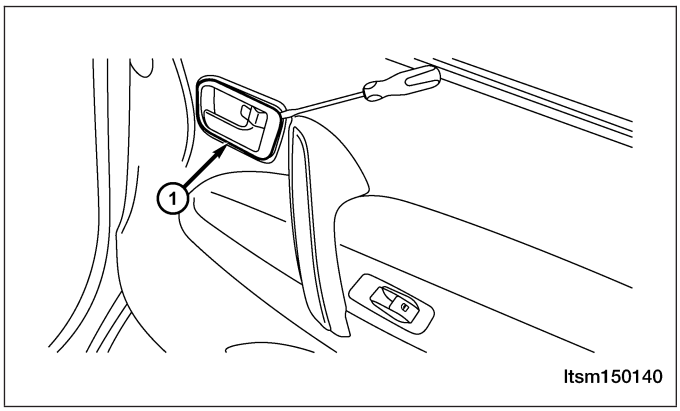

7. Carefully pry the door trim panel clips from the door.
8. Disconnect the power window switch and the door lamp electrical connector.
9. Remove the door trim panel.
10. Disconnect the speaker connector (1).
11. Remove the inner door handle assembly mounting screw (2).
12. Disconnect the inner door handle cables (3).
13. Remove the protective film (4).

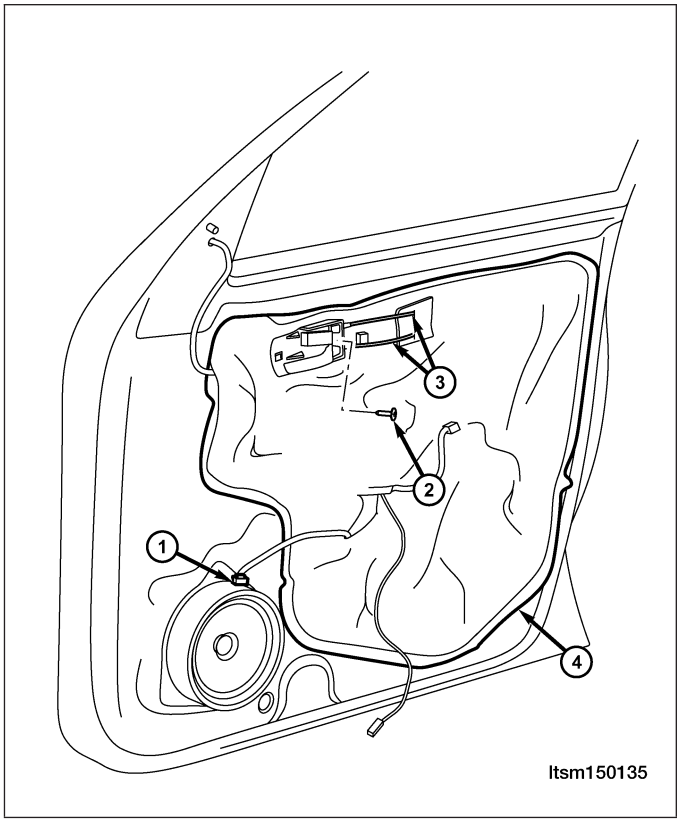

Downloaded from www.Manualslib.com manuals search engine

14. Remove three door lock assembly retaining bolts.
    (Tighten: Door lock assembly retaining bolts to 9 ± 1 N·m)
15. Remove the internal unlock cable (1) and lock cable (2).

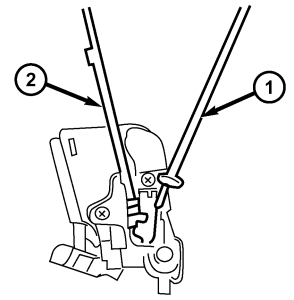

ltsm150098

16. Remove the lock buckle with a screwdriver.
    (Tighten: Lock buckle screws to 12 ± 2 N·m)
17. Installation is in the reverse order of removal.

Door Lock Assembly Inspection

1. Using the following table, apply battery voltage to the specified connector terminals.
2. Verify that the door lock assembly operates in the lock and unlock position when voltage is applied to the specified terminals.
3. If the test results are not as specified, replace the motor.

MEASURING CONDITION	OPERATIONAL DIRECTION
Battery positive (+) to terminal – 1 Battery negative (-) to terminal – 2	Lock
Battery positive (+) to terminal – 2 Battery negative (-) to terminal – 1	Unlock

Downloaded from www.Manualslib.com manuals search engine

BODY CONTROL MODULE - BCM

Description

The Body Control Module (BCM) is located behind the glove box. The BCM controls many electrical components and systems for the vehicle electrical system. The BCM is the primary hub that controls functions such as internal and external lighting, power windows and power door locks.

Operation

The Body Control Module (BCM) uses hard wired inputs from various sensors and switches. The sensors and switches are located throughout the vehicle.

The following components are inputs to the BCM:
- Key switch
- Rear defroster switch
- Hazard lamp switch
- Power window switches
- Power door lock switches
- Seat belt switch
- Vehicle speed
- Door ajar switches
- Turn signal switch

The following components are outputs from the BCM:
- Key lamp
- Stop lamp relay
- Rear defroster grid
- Courtesy lamps
- Power window motor
- Power door lock motor
- Turn signal lamps

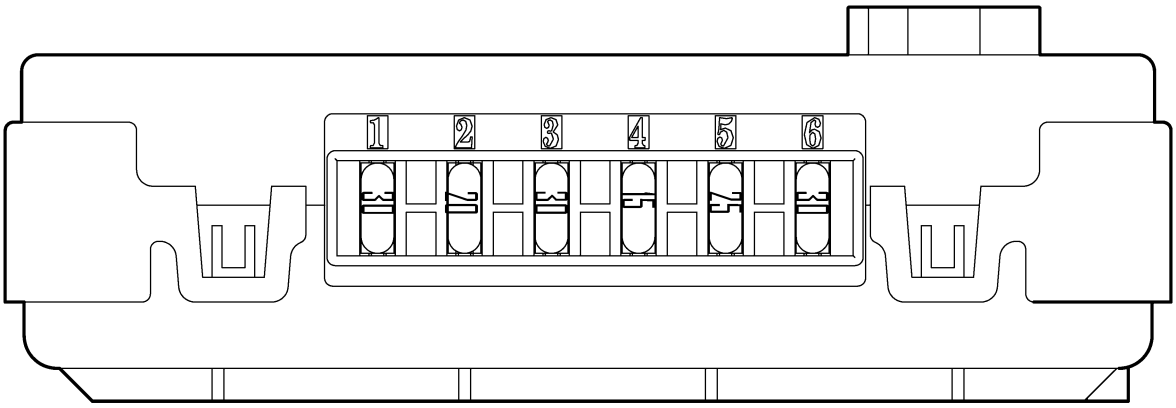

ltsm150130

FUSE NO.	AMPERAGE RATING	FUNCTION
1	30 A	Front Fog
2	20 A	CNT Lock
3	30 A	Spare
4	15 A	Spare
5	25 A	Spare
6	30 A	Front WIN

Downloaded from www.Manualslib.com manuals search engine

Electrical Schematics

Body Control Module (Page 1 of 5)

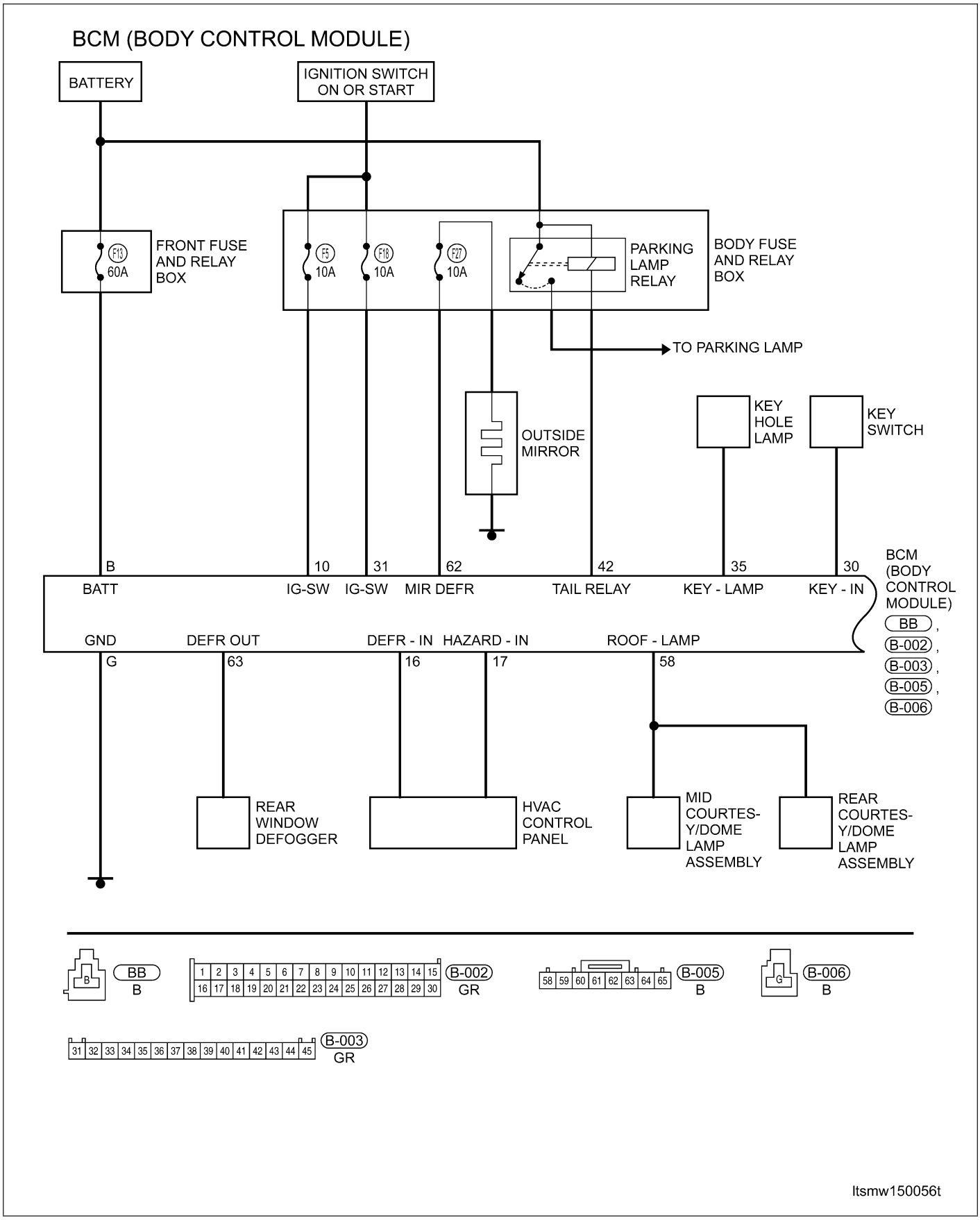

Downloaded from www.Manualslib.com manuals search engine

Body Control Module (Page 2 of 5)

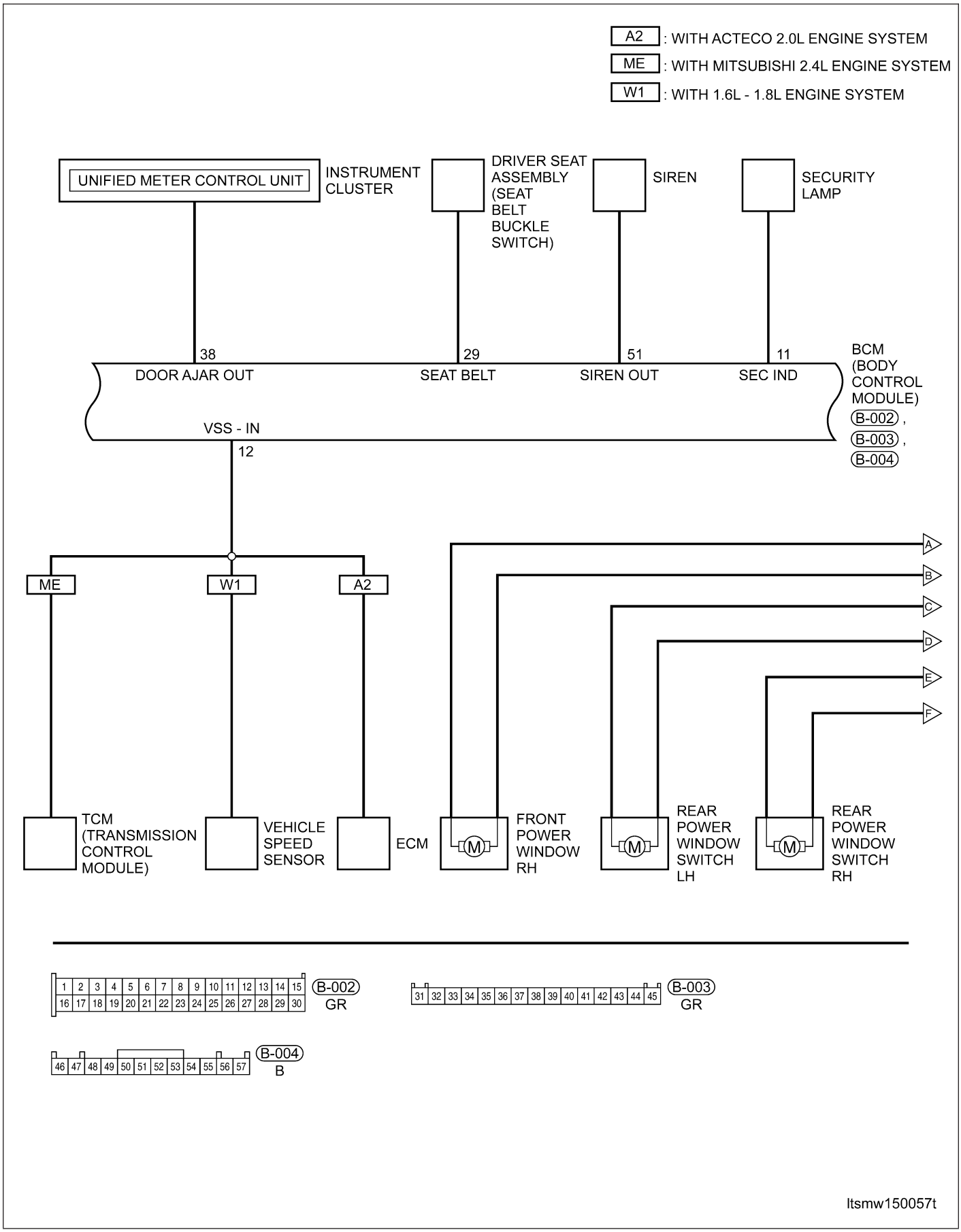

Downloaded from www.Manualslib.com manuals search engine

Body Control Module (Page 3 of 5)

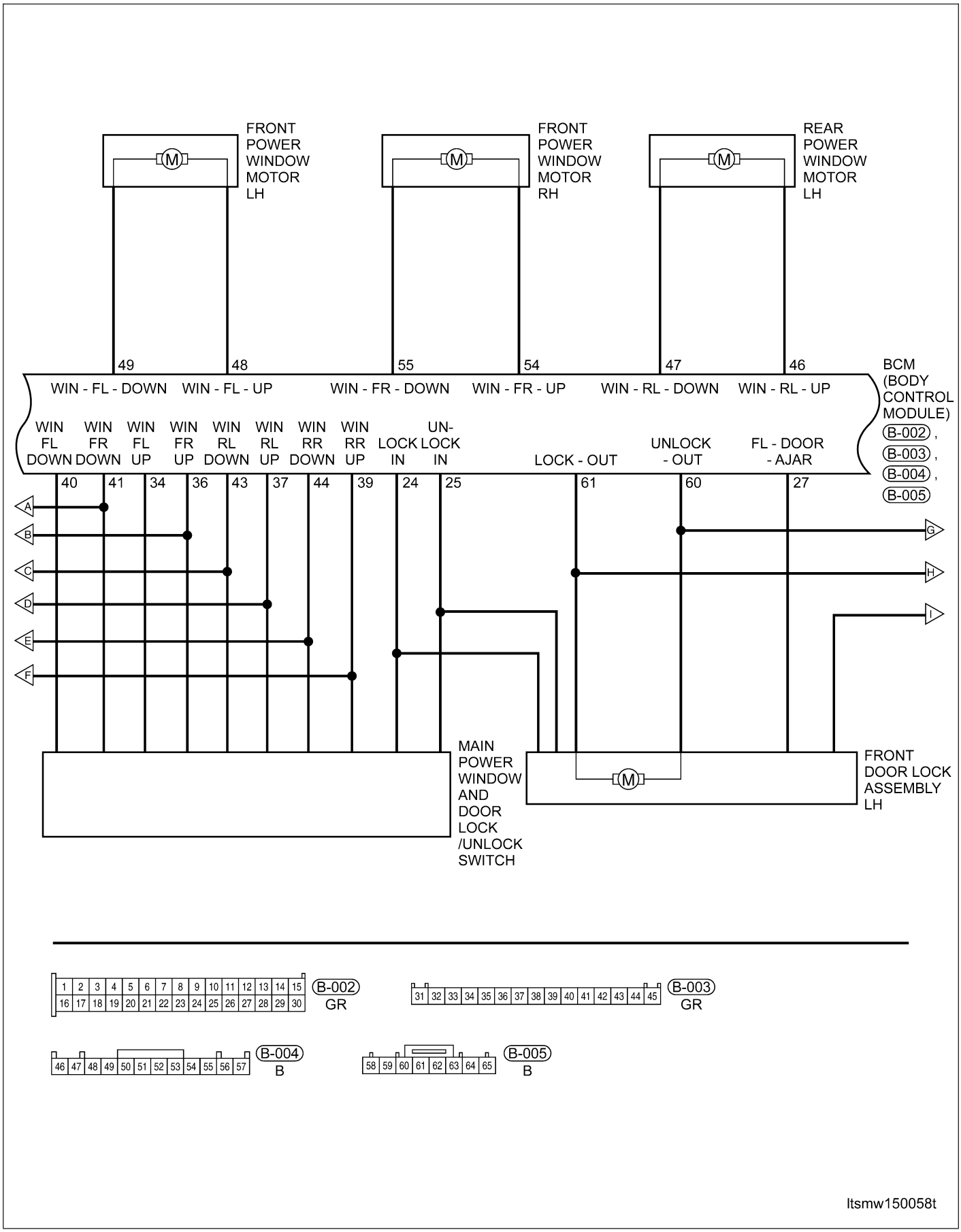

Downloaded from www.Manualslib.com manuals search engine

Body Control Module (Page 4 of 5)

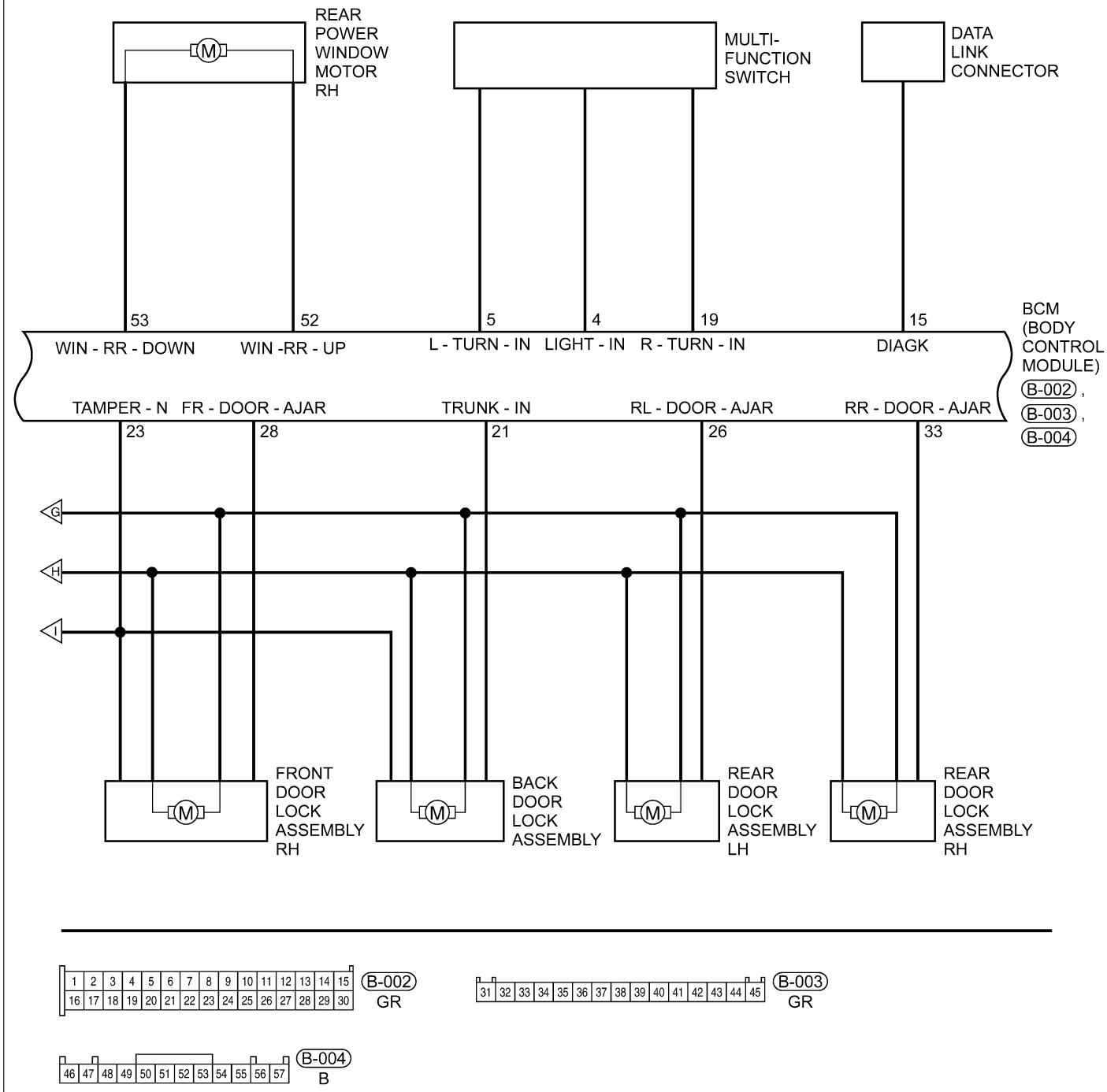

Downloaded from www.Manualslib.com manuals search engine

Body Control Module (Page 5 of 5)

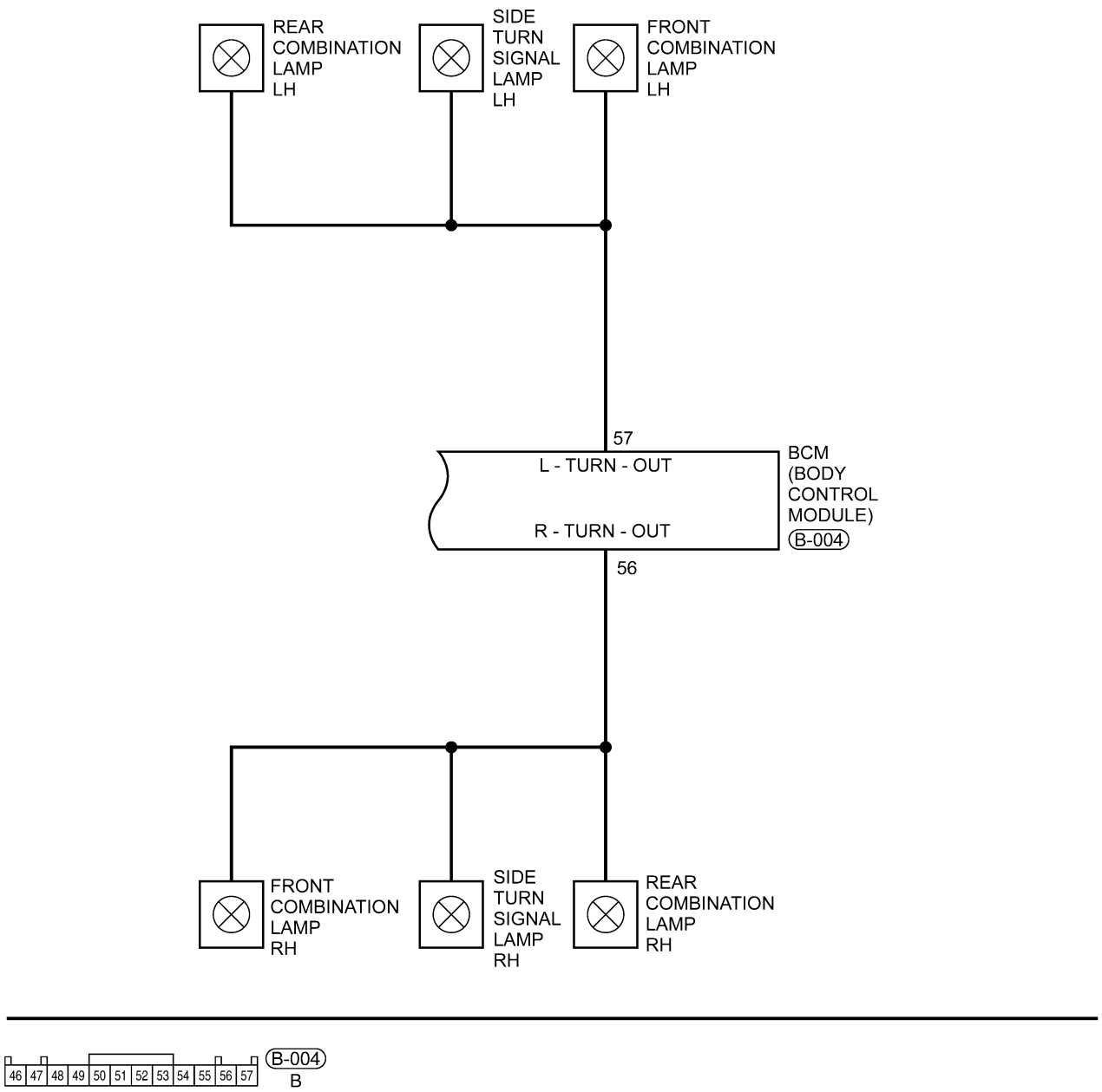

ltsmw150060t

Downloaded from www.Manualslib.com manuals search engine

Body Control Module (BCM)

Removal & Installation

1. Disconnect the negative battery cable.
2. Remove the glove box mounting bolts (1).

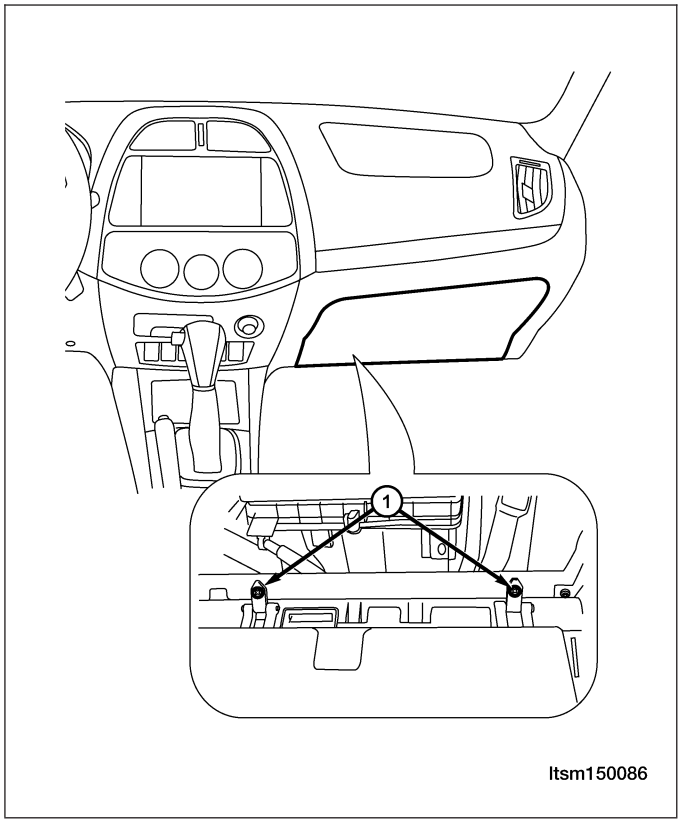

3. Remove the BCM and ECM mounting bracket retaining bolts.
4. Remove the BCM mounting bolts (1).
   (Tighten: BCM mounting bolts to 5 N·m)
5. Disconnect the BCM electrical connector (2).

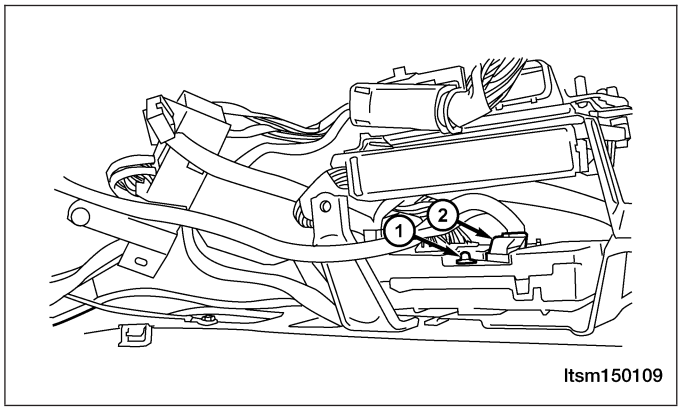

6. Remove the BCM.
7. Installation is in the reverse order of removal.

Downloaded from www.Manualslib.com manuals search engine

INSTRUMENT PANEL

Removal & Installation

1. Remove the steering wheel (See Steering Wheel Removal & Installation in Section 11 Steering).
2. Remove the multi-function switch and the wiper switch.
3. Remove the instrument cluster (See Instrument Cluster Removal & Installation in Section 15 Body & Accessories).
4. Remove the radio (See Radio Removal & Installation in Section 15 Body & Accessories).
5. Remove the HVAC control panel (See HVAC Control Panel Removal & Installation in Section 13 Heating & Air Conditioning).
6. Remove lower center bezel retaining screws (1).

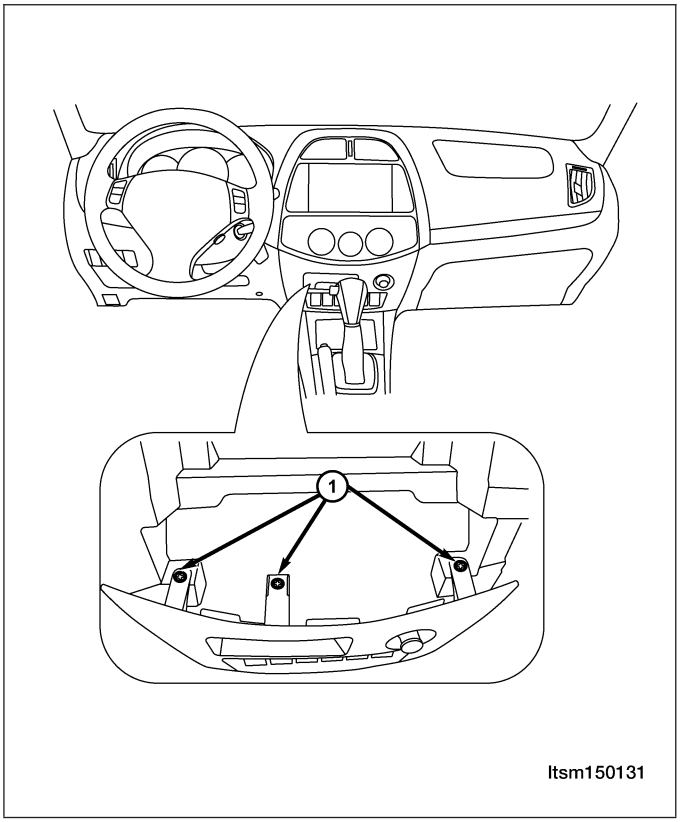

15

Downloaded from www.Manualslib.com manuals search engine

7. Remove the glove box retaining bolts (1).

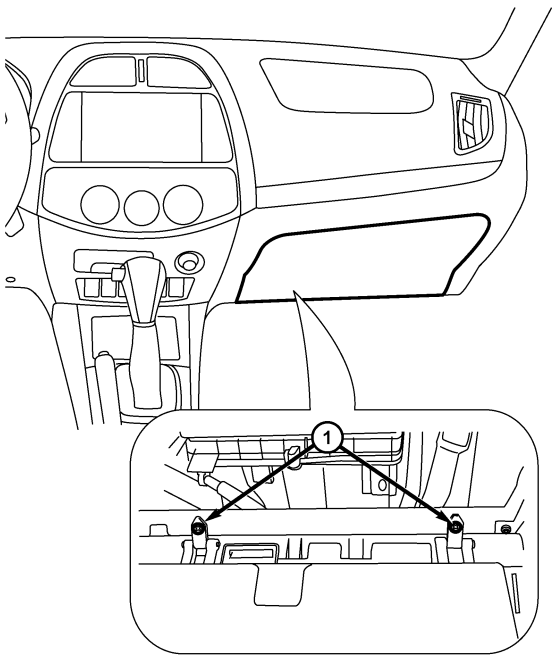

Itsm150086

8. Remove the bolts (1) under the glove box.

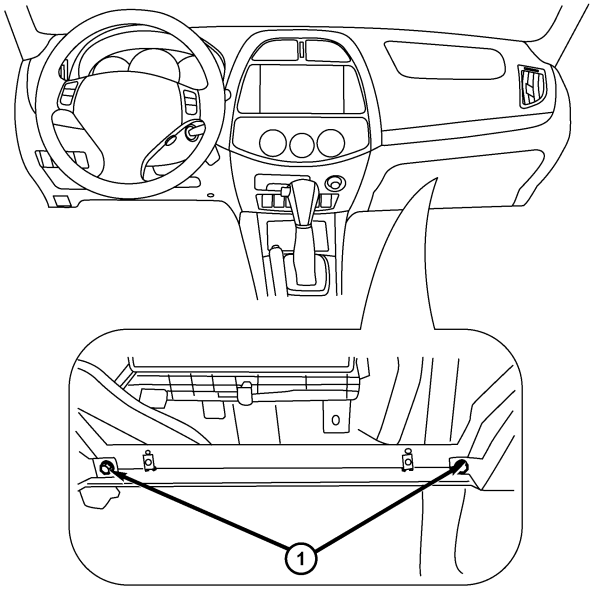

Itsm150087

Downloaded from www.Manualslib.com manuals search engine

9. Remove the knee bolster mounting screws (1).

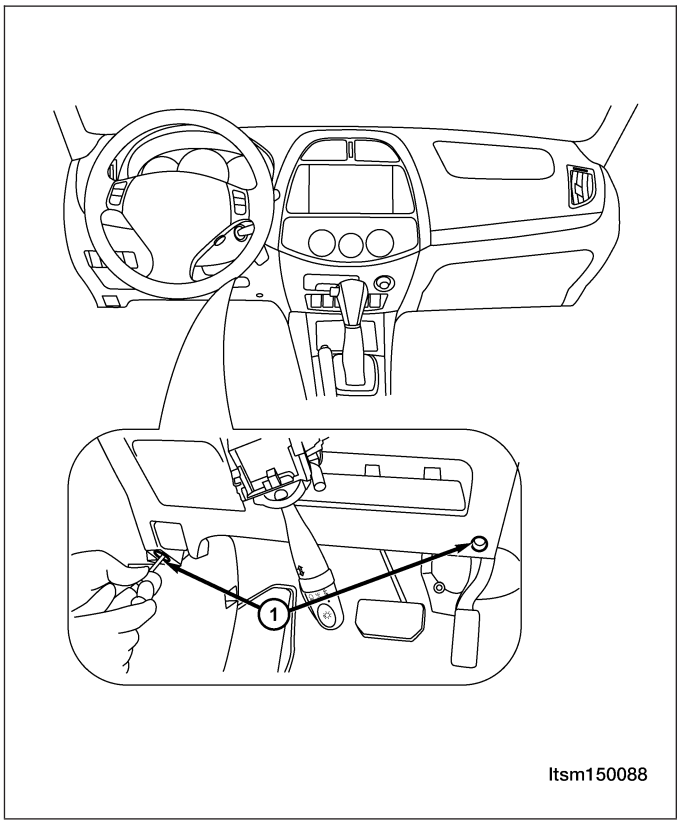

10. Remove the knee bolster (1) from the instrument panel.

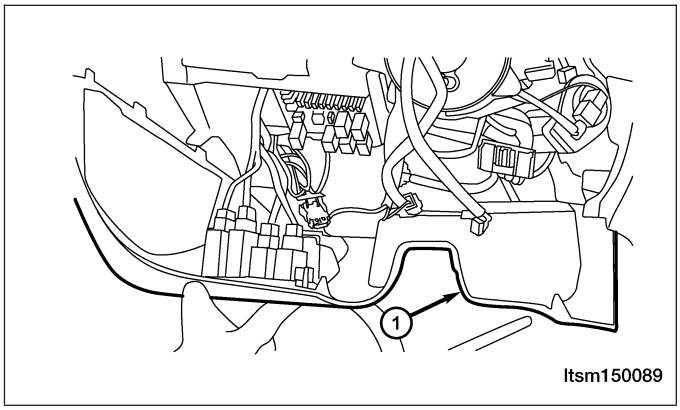

11. Remove the left trim cover of the instrument panel.

Downloaded from www.Manualslib.com manuals search engine

12. Remove the left instrument panel mounting bolt (1).

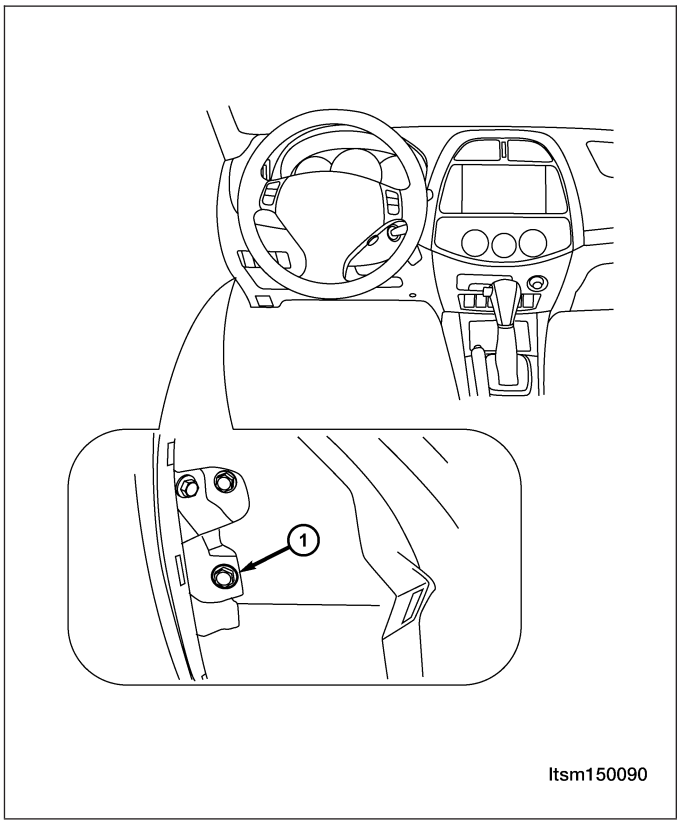

13. Remove the right trim cover of the instrument panel.
14. Remove the right instrument panel mounting bolt (1).

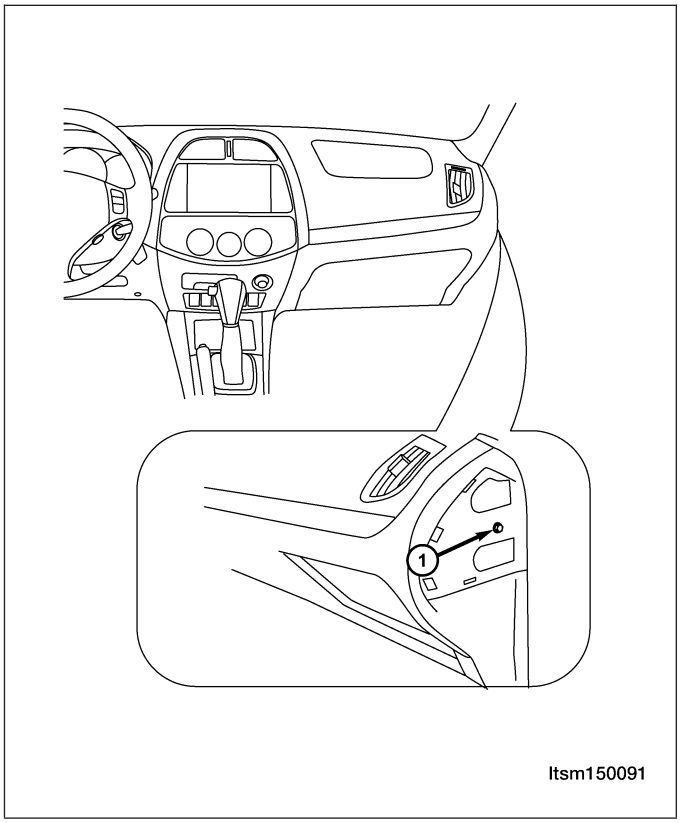

Downloaded from www.Manualslib.com manuals search engine

15. Remove two instrument panel mounting nuts (1) and bolts (2) in the glove box.

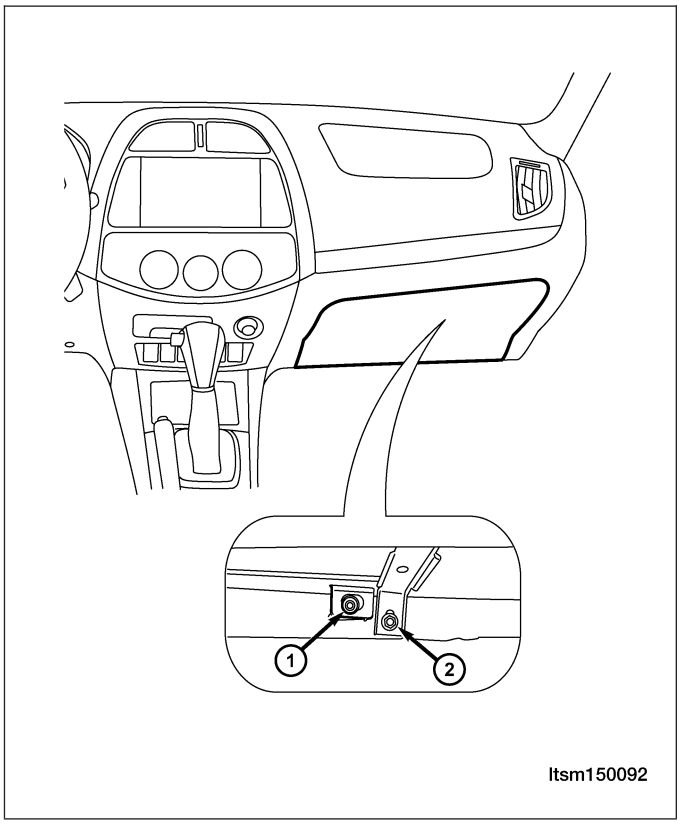

16. Remove the A-pillar trim panel (See A-Pillar Removal & Installation in Section 15 Body & Accessories).
17. Remove the lower console (See Lower Console Removal & Installation in Section 15 Body & Accessories).
18. Carefully remove the instrument panel.
19. Installation is in the reverse order of removal.

Downloaded from www.Manualslib.com manuals search engine

Lower Console

Removal & Installation

1. Gently pry the gearshift knob bezel off of the console cover.

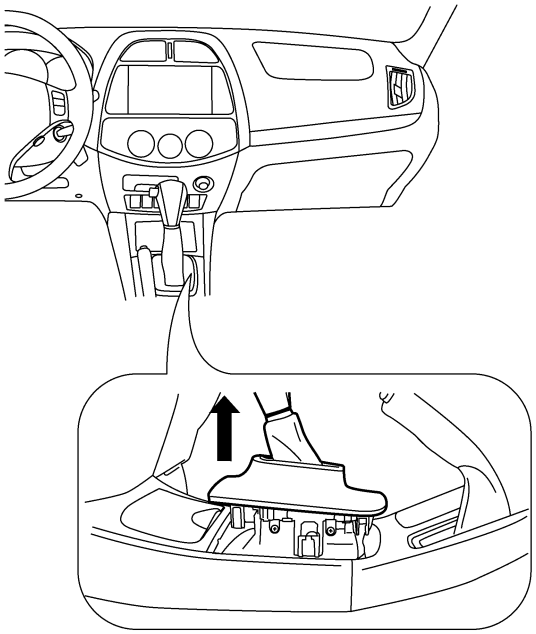

2. Remove the console mounting bolts (1) under the gearshift knob bezel.

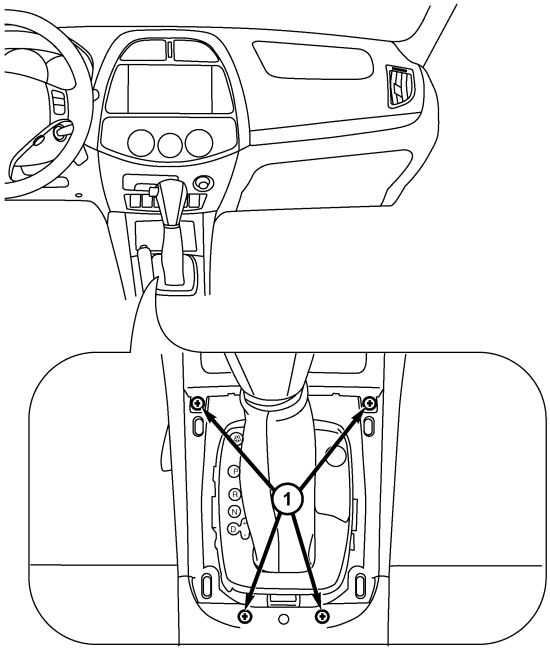

Downloaded from www.Manualslib.com manuals search engine

3. Remove the storage box.

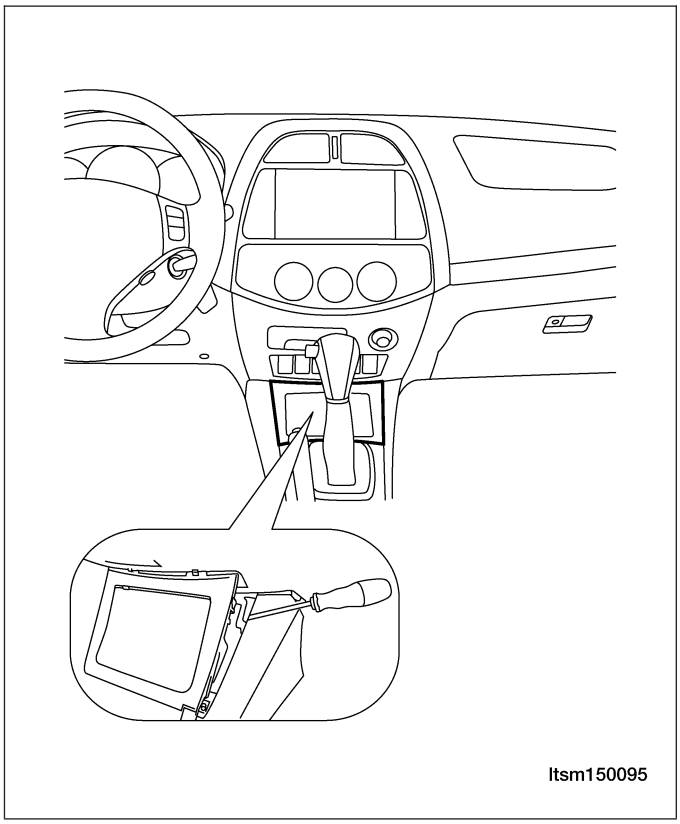

4. Remove the bolts (1) under the rubber cushion.
5. Remove the lower console.
6. Installation is in the reverse order of removal.

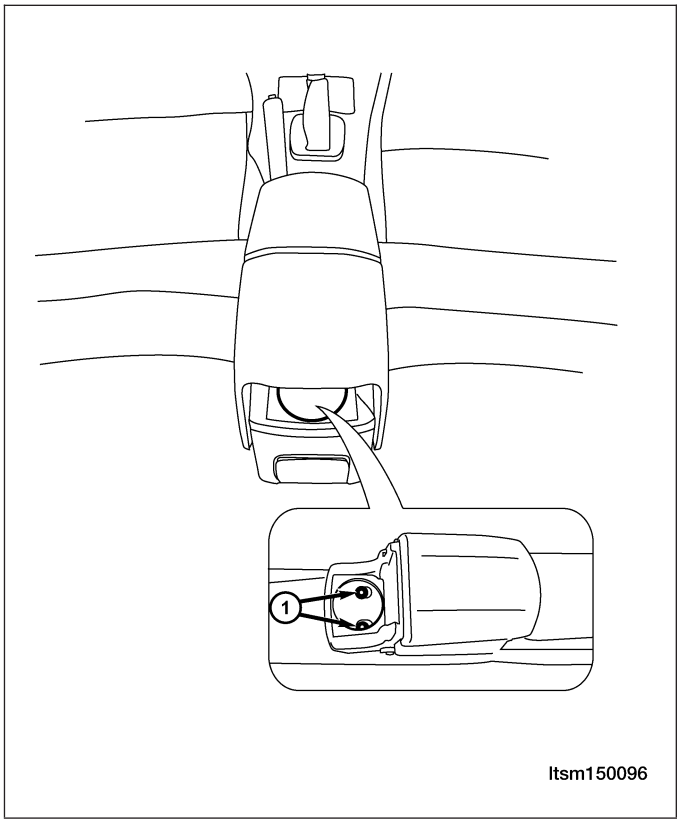

Downloaded from www.Manualslib.com manuals search engine

INSTRUMENT CLUSTER

Description

The Instrument Cluster (IC) is located in the instrument panel directly in front of the driver. The IC is used to inform the driver of specific vehicle information. The IC uses indicator lamps and gauges to warn the driver of potentially critical operating conditions.

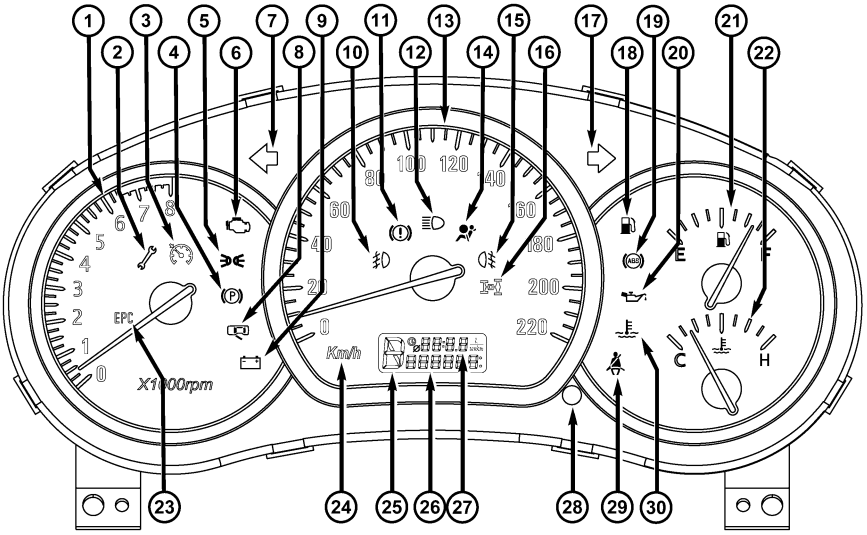

Itsm150129

1 - Tachometer	16 - 4WD Warning Light (If Equipped)
2 - Maintenance Indicator Light	17 - Right-Turn Light
3 - Cruise Indicator Light	18 - Low Fuel Warning Light
4 - Parking Brake System Warning Light	19 - ABS Warning Light
5 - Parking Light	20 - Oil Pressure Warning Light
6 - Malfunction Indicator Light	21 - Fuel Gauge
7 - Left-Turn Light	22 - Temperature Gauge
8 - Door/Trunk Lid Open Warning Display	23 - Electronic Throttle Control Indicator Light
9 - Charging System Light	24 - Km/h Light
10 - Front Fog Light Indicator Light	25 - Transaxle Range Indicator (If Equipped)
11 - Brake System Warning Light	26 - Odometer/Trip Odometer
12 - High Beam Indicator Light	27 - Digital Clock
13 - Speedometer	28 - Adjust Button
14 - Airbag Light	29 - Seat Belt Reminder Light
15 - Rear Fog Light Indicator Light	30 - Coolant Temperature Warning Light

Operation

The Instrument Cluster (IC) uses hard wired inputs from various sensors and switches. The sensors and switches are located throughout the vehicle. The IC displays the following gauges:

- Speedometer - The IC displays the vehicle speed as determined by the Engine Control Module (ECM).
- Tachometer - The IC displays the engine speed as determined by the Engine Control Module (ECM).
- Temperature Gauge - The IC displays the engine coolant temperature as determined by the Engine Control Module (ECM).
- Fuel Gauge - The IC displays the amount of fuel in the fuel tank as determined by the fuel level sensor.

Downloaded from www.Manualslib.com manuals search engine

Specifications

Torque Specifications

DESCRIPTION	TORQUE (N·m)
Instrument Cluster Bezel Fasteners	2
Instrument Cluster Fasteners	9

Special Tools

Diagnostic Scan Tool X-431	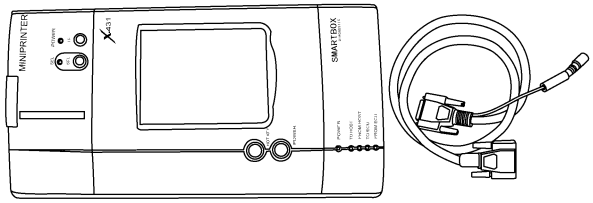
Digital Multimeter Fluke 15B & 17B	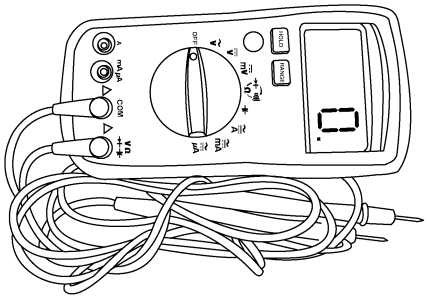

Downloaded from www.Manualslib.com manuals search engine

Electrical Schematics

Instrument Cluster (Page 1 of 8)

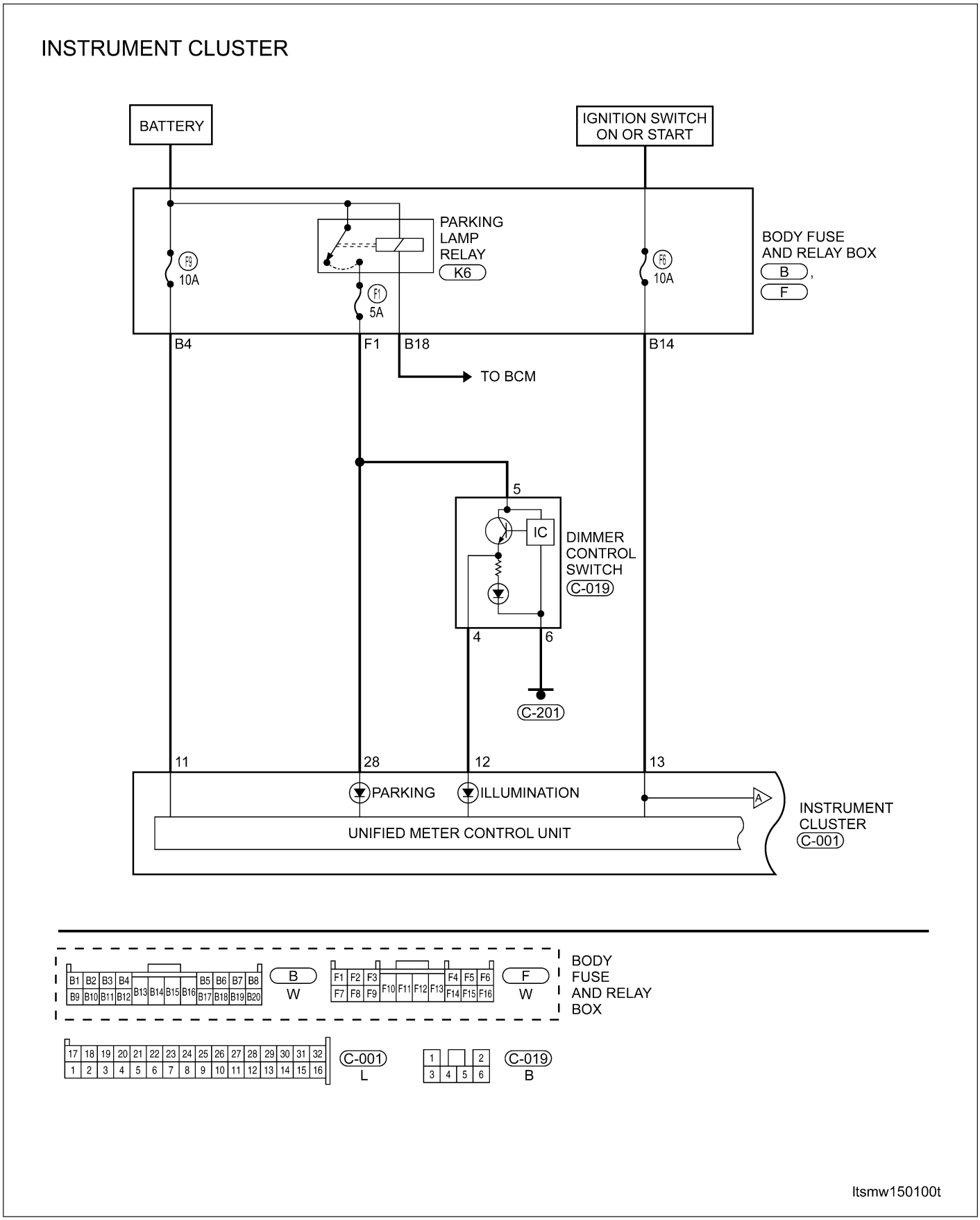

Downloaded from www.Manualslib.com manuals search engine

Instrument Cluster (Page 2 of 8)

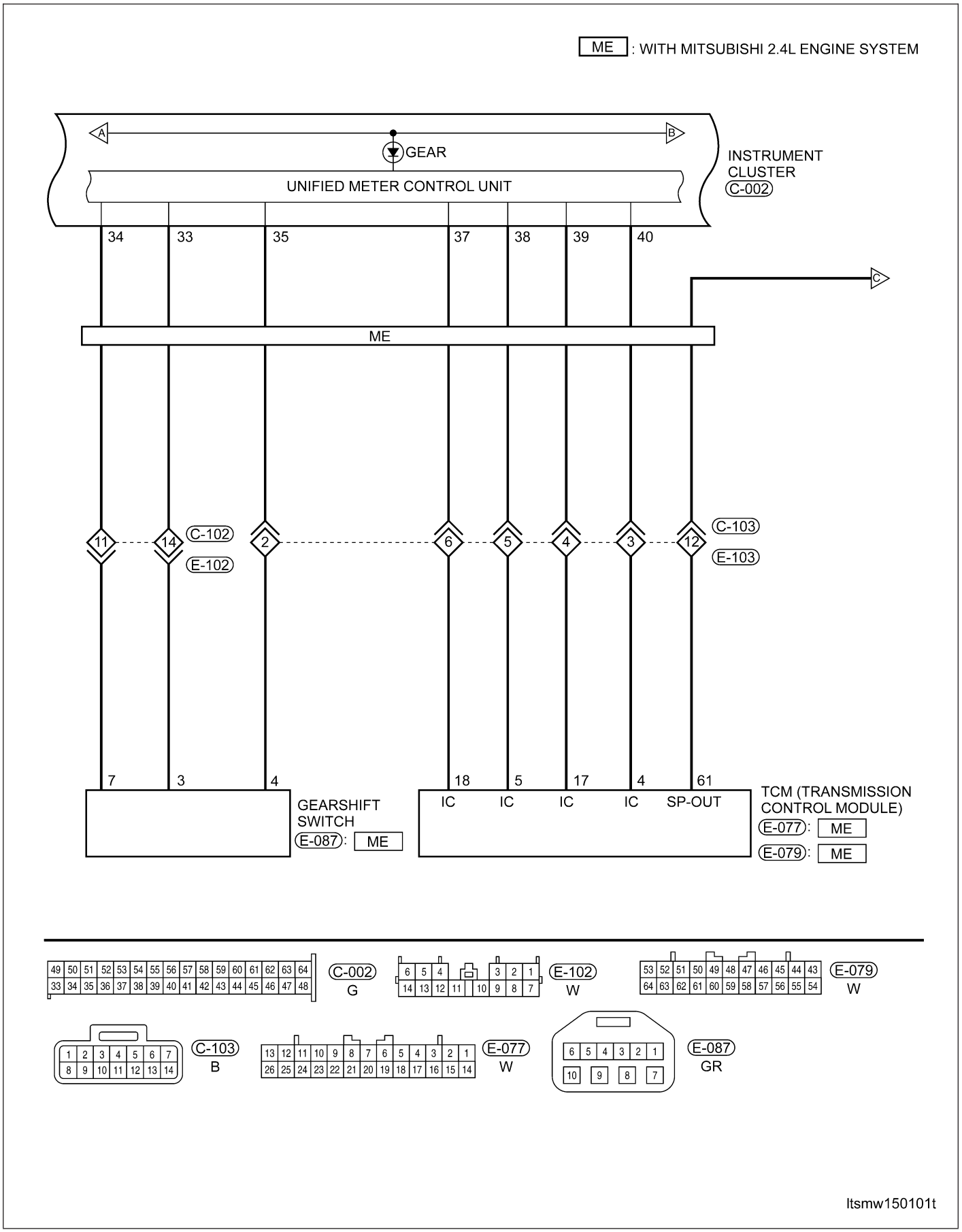

15

Downloaded from www.Manualslib.com manuals search engine

Instrument Cluster (Page 3 of 8)

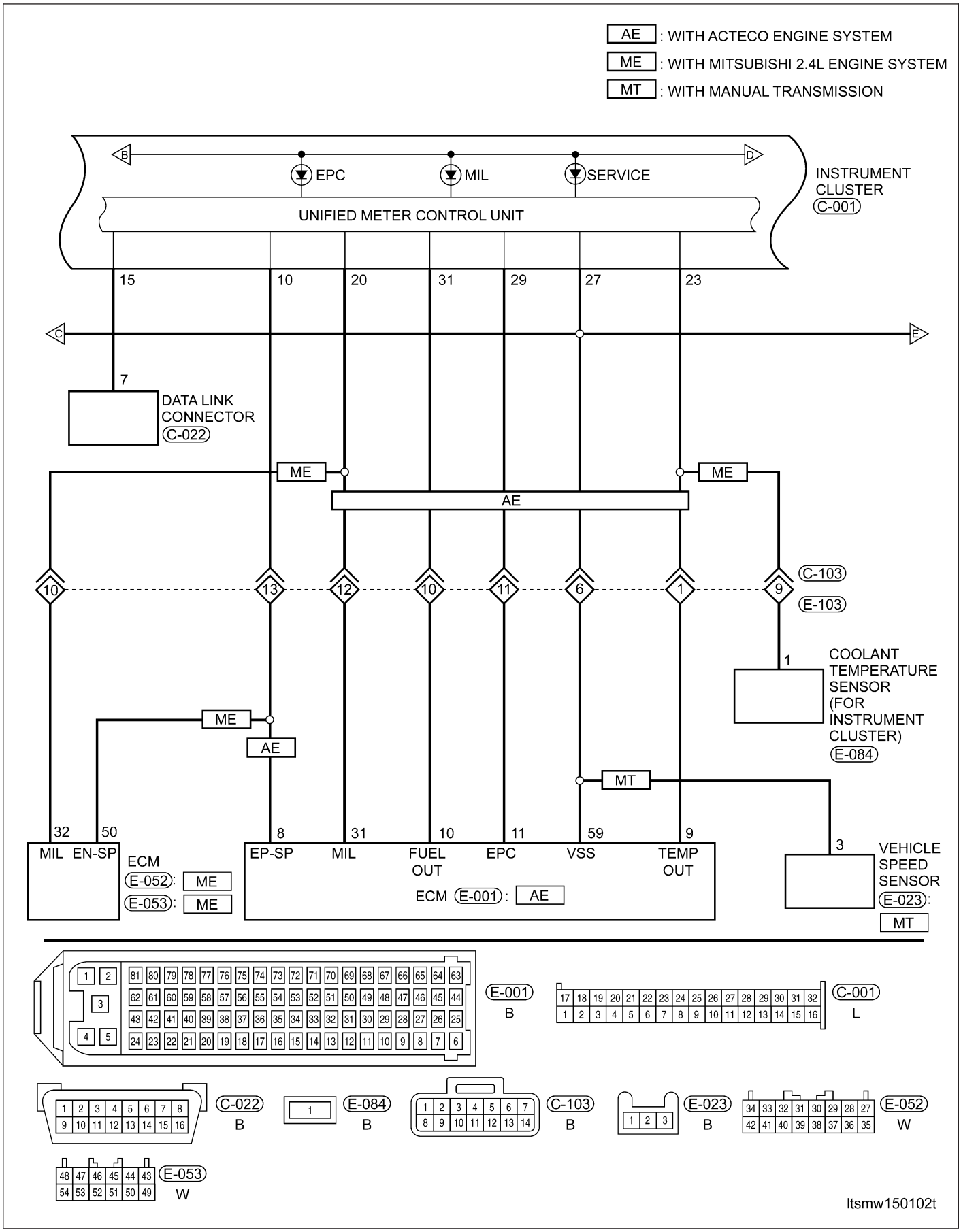

Downloaded from www.Manualslib.com manuals search engine

Instrument Cluster (Page 4 of 8)

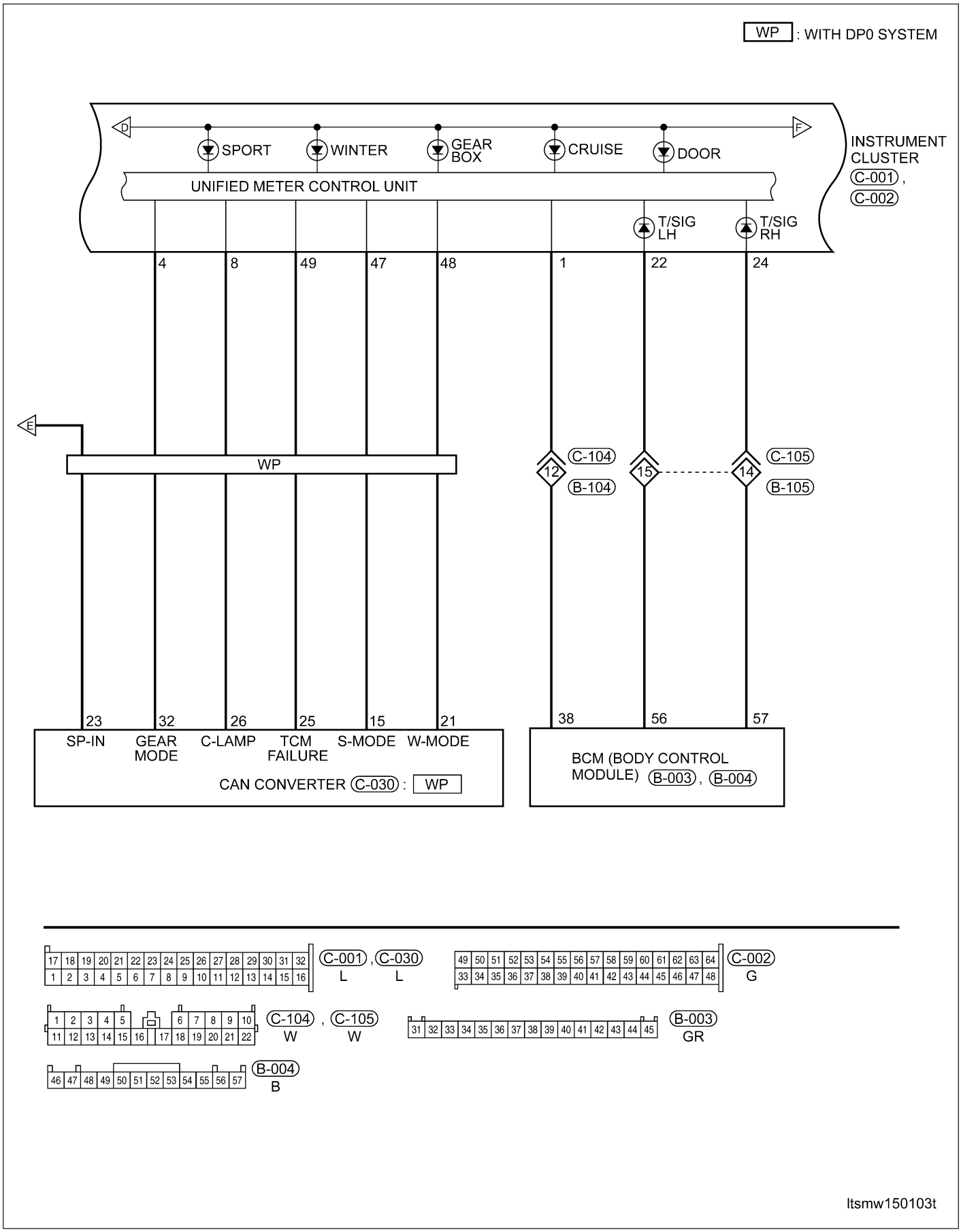

Downloaded from www.Manualslib.com manuals search engine

Instrument Cluster (Page 5 of 8)

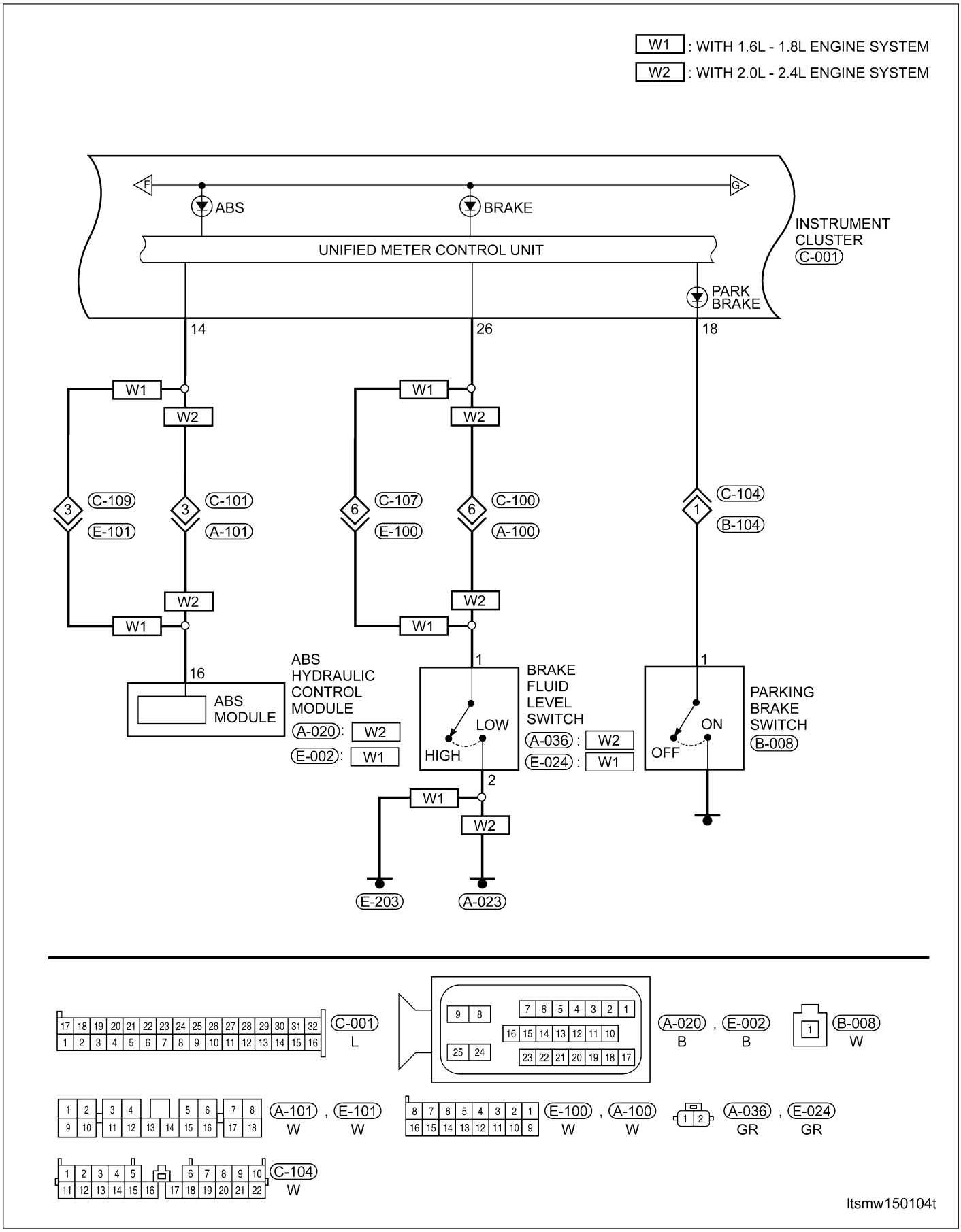

Downloaded from www.Manualslib.com manuals search engine

Instrument Cluster (Page 6 of 8)

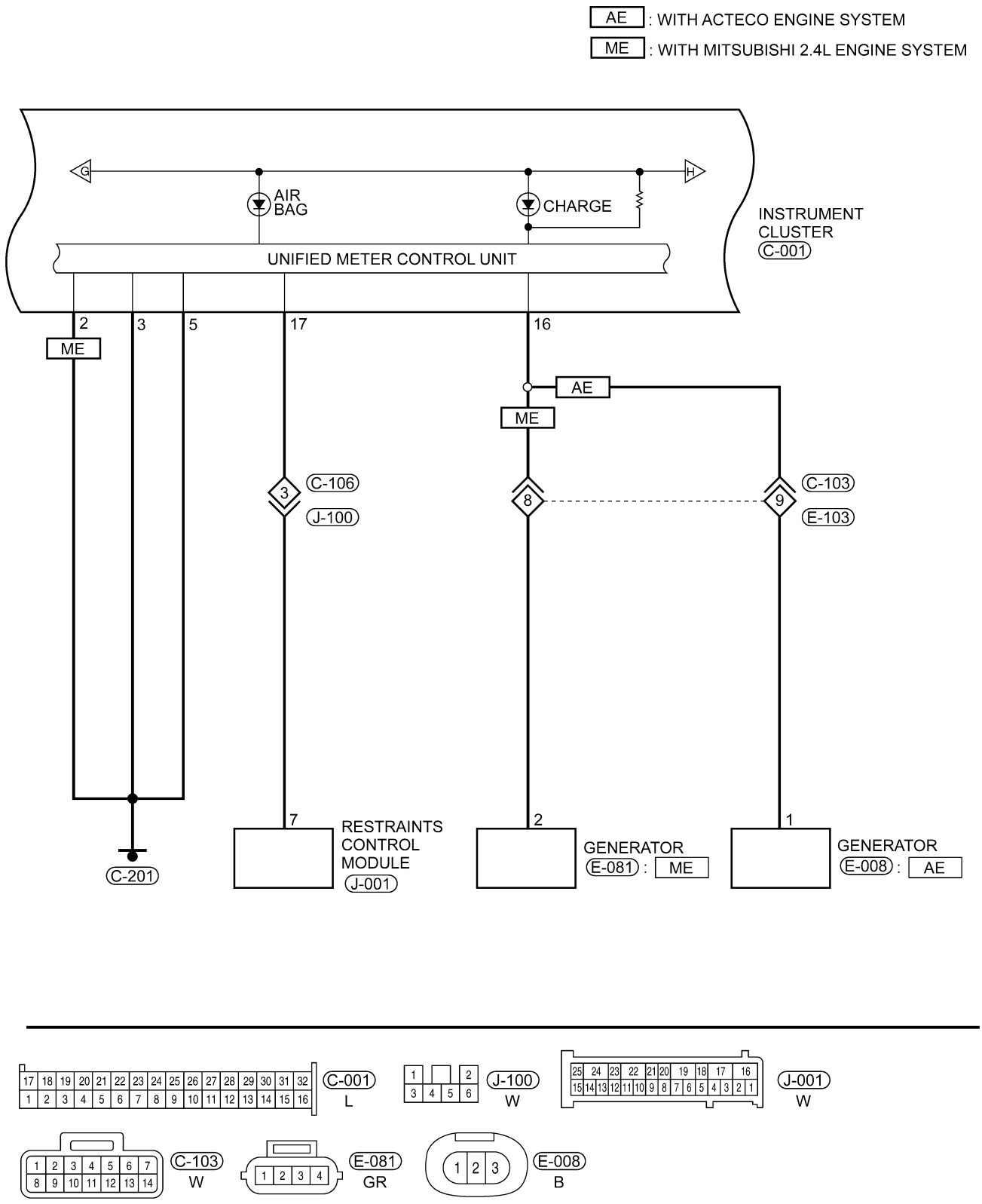

ltsmw150105t

Downloaded from www.Manualslib.com manuals search engine

Instrument Cluster (Page 7 of 8)

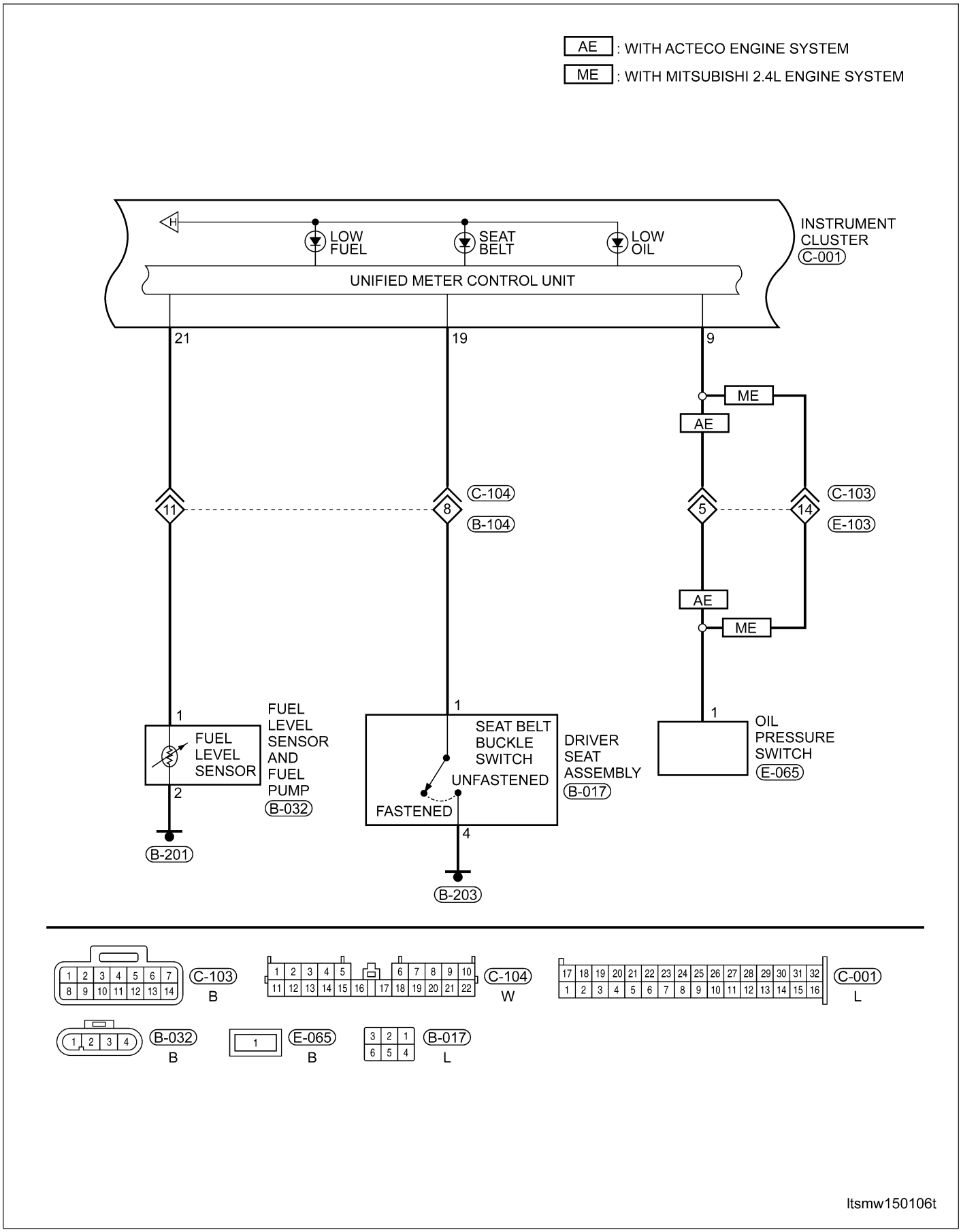

Downloaded from www.Manualslib.com manuals search engine

Instrument Cluster (Page 8 of 8)

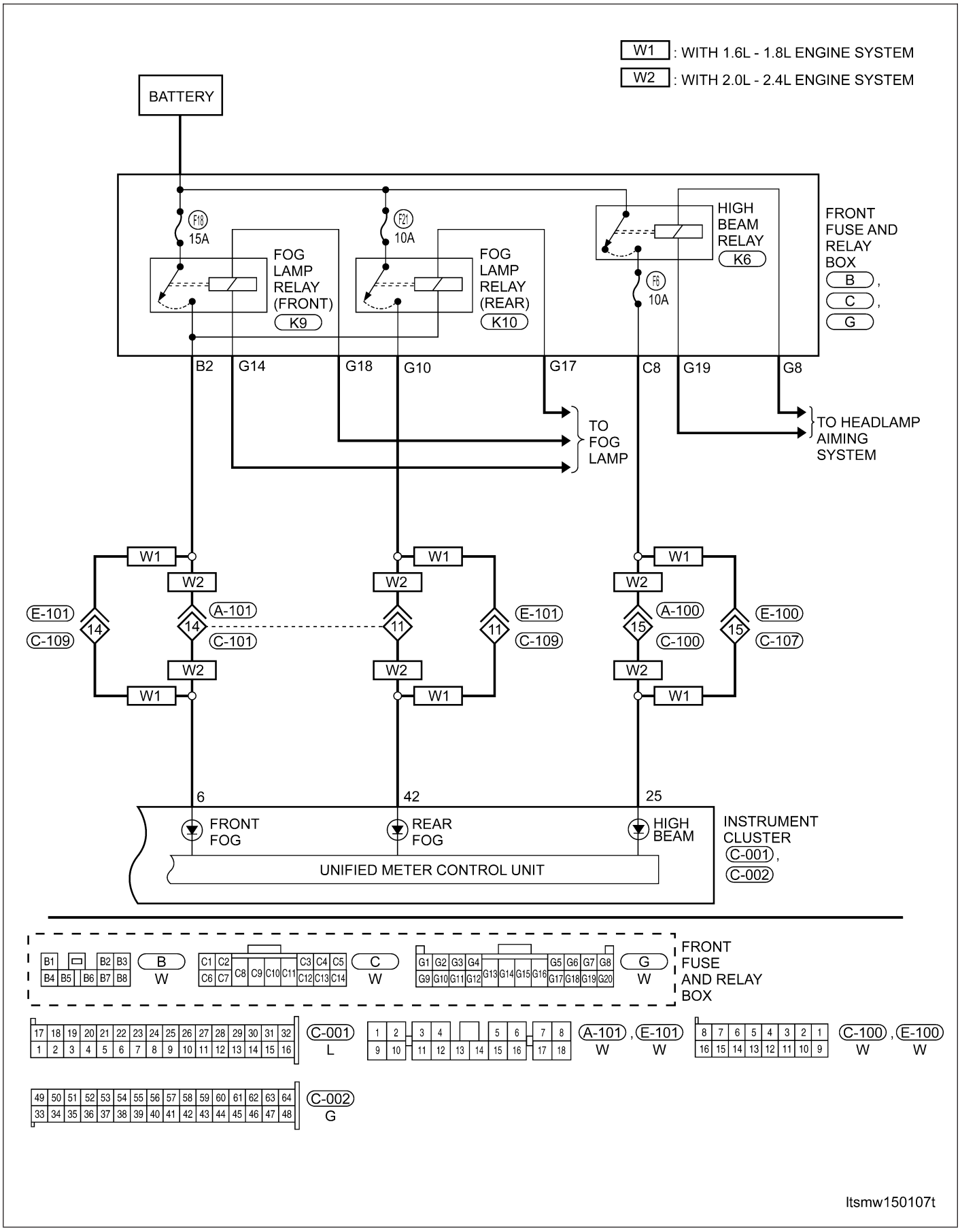

Downloaded from www.Manualslib.com manuals search engine

Instrument Cluster Connector Pin-Out Table

Instrument Cluster Connector Pin-Out Table

PIN	CIRCUIT IDENTIFICATION	PIN	CIRCUIT IDENTIFICATION
1	Door Lamp	33	N/A (With ACTECO Engine)
			P (With MITSUBISHI Engine)
2	N/A (With ACTECO Engine)	34	N/A (With ACTECO Engine)
	GND (With MITSUBISHI Engine)		R (With MITSUBISHI Engine)
3	GND (Power)	35	N/A (With ACTECO Engine)
			N (With MITSUBISHI Engine)
4	PWM Gear Mode	36	N/A (With ACTECO Engine)
			Auto Mode (With MITSUBISHI Engine)
5	GND (Sensor)	37	N/A (With ACTECO Engine)
			4 (With MITSUBISHI Engine)
6	Front Fog Lamp	38	N/A (With ACTECO Engine)
			3 (With MITSUBISHI Engine)
7	—	39	N/A (With ACTECO Engine)
			2 (With MITSUBISHI Engine)
8	Cruise Lamp	40	N/A (With ACTECO Engine)
			1 (With MITSUBISHI Engine)
9	Low Oil Pressure Lamp	41	—
10	Speed Input	42	Rear Fog Lamp
11	Continuous Supply Voltage	43	—
12	Illumination Lamp	44	—
13	Ignition Switch	45	—
14	ABS Lamp	46	—
15	Diagnostic Link K	47	Sport Mode (With ACTECO Engine)
			N/A (With MITSUBISHI Engine)
16	Charge Lamp	48	Winter Mode (With ACTECO Engine)
			N/A (With MITSUBISHI Engine)
17	Airbag Lamp	49	TCM Failure (With ACTECO Engine)
			N/A (With MITSUBISHI Engine)
18	Parking Brake Lamp	50	—
19	Seatbelt Lamp	51	—
20	MIL Lamp	52	—
21	Low Fuel Level Lamp	53	—
22	Left Turn Lamp	54	—
23	Coolant Temperature Input	55	—
24	Right Turn Lamp	56	—
25	High Beam Lamp	57	—
26	Low Brake Fluid Level Lamp	58	—
27	Vehicle Speed Input	59	—
28	Parking Lamp	60	—
29	EPC Lamp	61	—

Downloaded from www.Manualslib.com manuals search engine

PIN	CIRCUIT IDENTIFICATION	PIN	CIRCUIT IDENTIFICATION
30	—	62	—
31	Fuel Consumption Input	63	—
32	—	64	—

Downloaded from www.Manualslib.com manuals search engine

DIAGNOSIS & TESTING

Clearing Service Monitor Lamp

Perform the following to clear the service monitor lamp:

1. Turn the ignition switch off.
2. Press down and hold the Mode switch.
3. Turn the ignition switch on.
4. Release the Mode switch.
5. Press the Mode switch and the Clock switch simultaneously within 30 seconds and hold less than 2 seconds to clear the mileage maintenance identification.

Diagnostic Help

1. The X-431 scan tool connects to the Data Link Connector (DLC) and communicates with the vehicle electronic modules through the class two serial data circuit.
2. Confirm that the malfunction is current and carry-out the diagnostic tests and repair procedures.
3. If the DTC cannot be deleted, it is a current fault.
4. Use a digital multimeter to perform voltage readings on electronic systems.
5. Refer to any Technical Bulletins that issued.
6. Visually inspect the related electrical wiring harness.
7. Inspect and clean all Instrument Cluster (IC) grounds that are related to the DTC.
8. If numerous trouble codes were set, use the electrical schematic and look for any common ground circuits or voltage supply circuits that may apply to the DTC.

Intermittent DTC Troubleshooting

If the failure is intermittent, perform the following:

- Check for loose connectors.
- Look for any chafed, pierced, pinched, or partially broken wires.
- Monitor the scan tool data relative to this circuit.
- Wiggle the related electrical wiring harness and connectors while looking for an interrupted signal on the affected circuit.
- If possible, try to duplicate the conditions under which the DTC set.
- Look for the data to change or for the DTC to reset during the wiggle test.
- Look for broken, bent, pushed out or corroded terminals.
- Inspect the sensor and mounting area for any condition that would result in an incorrect signal, such as damage or foreign material.
- A data recorder, and/or oscilloscope should be used to help diagnose intermittent conditions.

Ground Inspection

Ground connections are very important to the proper operation of electrical and electronic circuits. Ground connections are often exposed to moisture, dirt and other corrosive elements. The corrosion (rust) can become an unwanted resistance. This added resistance can alter the way a circuit works.

Electronically controlled circuits are very sensitive to proper grounding. A loose or corroded ground can drastically affect an electronically controlled circuit. A poor or corroded ground can effect the circuit. Perform the following when inspecting a ground connection:

1. Remove the ground bolt or screw.
2. Inspect all mating surface for tarnish, dirt, rust, etc.
3. Clean as required to assure good contact.
4. Reinstall bolt or screw securely.
5. Inspect for ″add-on″ accessories which may be interfering with the ground circuit.
6. If several wires are crimped into one ground eyelet terminal, check for proper crimps. Make sure all of the wires are clean, securely fastened and providing a good ground path. If multiple wires are crimped to one eyelet, make sure no excess wire insulation has been crimped creating a bad ground.

Downloaded from www.Manualslib.com manuals search engine

Diagnostic Tools

- Diagnostic Scan Tool X-431
- Digital Multimeter
- Jumper Wire

Diagnostic Trouble Code (DTC) List

Instrument Cluster DTC List

DTC	DTC DEFINITION
U0303	Fuel Sensor O/C or Shorted To Supply
U0303	Fuel Sensor Shorted To Ground
U040F	Temperature Sensor O/C or Shorted To Supply
U040F	Temperature Sensor Shorted To Ground
U029C	Battery Over Voltage Error
U029C	Battery Under Voltage Error
U050F	EEPROM Checksum Error

Downloaded from www.Manualslib.com manuals search engine

Diagnostic Trouble Code (DTC) Tests

U029C - Battery Over Voltage Error
U029C - Battery Under Voltage Error

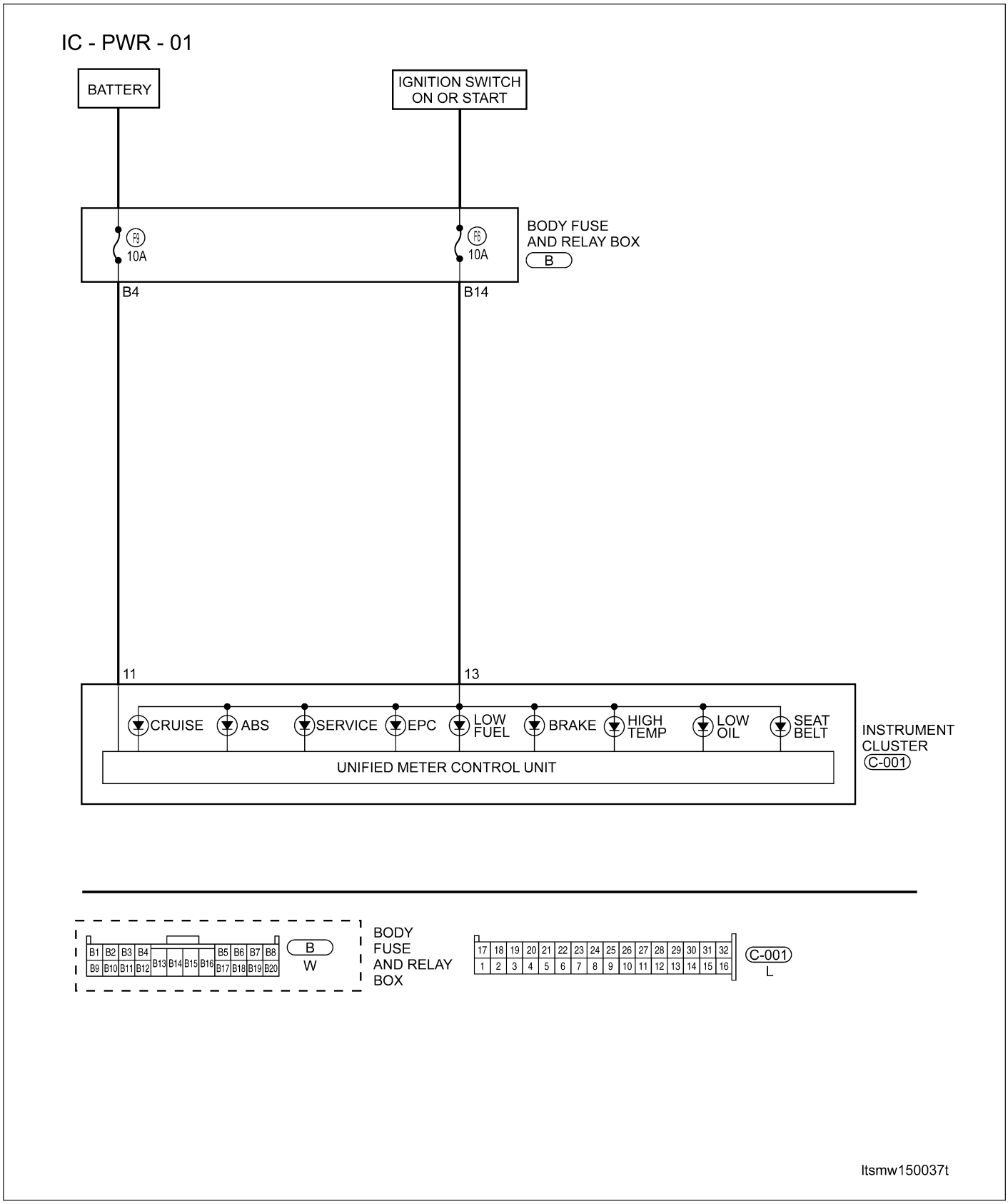

Downloaded from www.Manualslib.com manuals search engine

IC - PWR - 02

ME : WITH MITSUBISHI 2.4L ENGINE SYSTEM

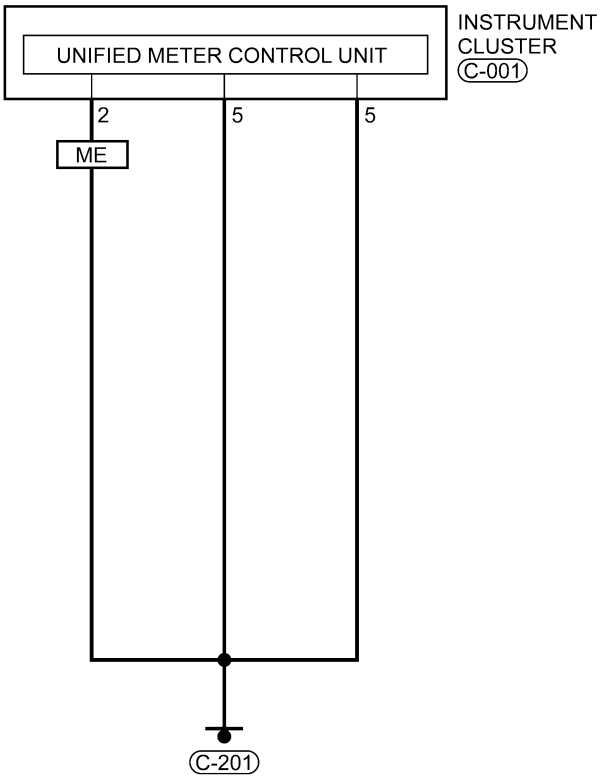

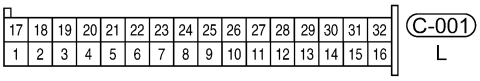

ltsmw150038t

Downloaded from www.Manualslib.com manuals search engine

On Board Diagnostic Logic

- Self-diagnosis detection logic.

DTC NO.	DTC DEFINITION	DTC DETECTION CONDITION	DTC SET CONDITION	POSSIBLE CAUSE
U029C	Battery over voltage error	Turn ignition switch on	Instrument Cluster (IC) detected that the battery voltage is excessively high.	• Charge system • Instrument Cluster (IC)
U029C	Battery under voltage error		Instrument Cluster (IC) detected that the battery voltage is excessively low.	• Battery • Charge system • Harness or connector • Instrument Cluster (IC)

DTC Confirmation Procedure:

Before performing the following procedure, confirm that battery voltage is more than 12 V.

- Turn ignition switch off.
- Connect the X-431 scan tool to the Data Link Connector (DLC) - use the most current software available.
- Turn ignition switch on, select view, record and erase DTC.
- Start engine and warm it up to the normal operating temperature.
- Select view DTC and data stream.
- If the DTC is detected, the condition is current. Go to Diagnostic Procedure - Step 1.
- If the DTC is not detected, the DTC condition is intermittent (See Diagnostic Help and Intermittent DTC Troubleshooting in Section 15 Body & Accessories for more information).
-

NOTE :

- Inspect the vehicle for aftermarket accessories that may exceed the Generator System output.
- Inspect the fuses. If an open fuse is found, use the wiring schematics as a guide and inspect the wiring and connectors for damage.
- Troubleshoot any Engine Control Module (ECM) charging/cranking DTCs before proceeding.

NOTE :

While performing electrical diagnosis & testing, always refer to the electrical schematics for specific circuit and component information.

Downloaded from www.Manualslib.com manuals search engine

Diagnostic Procedure

1. CHECK GROUND CONNECTION

- Turn ignition switch off.
- Loosen and retighten ground screws on the body (See Ground Inspection in Section 15 Body & Accessories).
- Inspect ground connection C-201 mounting position (See Vehicle Wiring Harness Information - Main Harness in Section 16 Wiring).

Is the ground connection OK?

Yes >> Go to the next step.

No >> Repair or replace ground harness or connections.

2. CHECK INSTRUMENT CLUSTER (IC) ELECTRICAL CONNECTOR

- Disconnect Instrument Cluster (IC) electrical connector.
- Inspect the electrical connector for damage.

Is the electrical connector OK?

Yes >> Go to the next step.

No >> Repair or replace the electrical connector as necessary.

3. CHECK INSTRUMENT CLUSTER (IC) POWER SUPPLY

- Turn ignition switch on.
- If the vehicle is not equipped with Mitsubishi 2.4L engine system, check IC power supply between terminal 11, 13 and terminal 5 in the IC electrical connector C-001 terminal side.

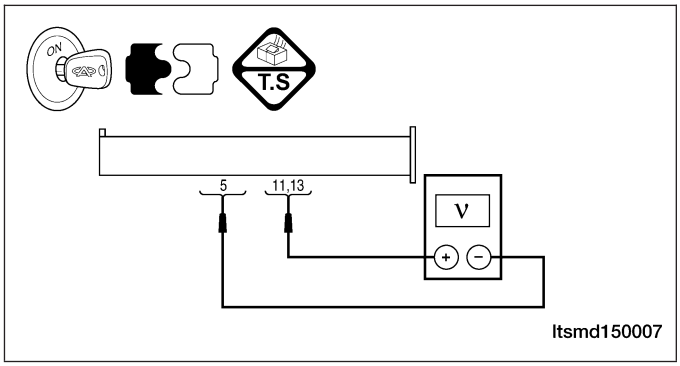

- If the vehicle is equipped with Mitsubishi 2.4L engine system, check IC power supply between terminal 11 and terminal 2 in the IC electrical connector C-001 terminal side.

Is the voltage between 9 - 17 V?

Yes >> Replace the IC.

No >> Go to the next step.

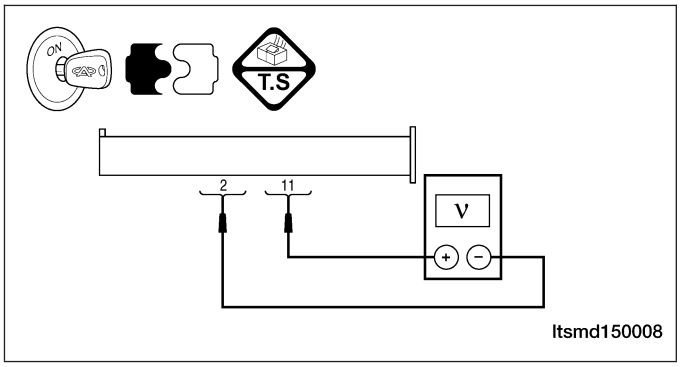

15

Downloaded from www.Manualslib.com manuals search engine

4. CHECK SYSTEM VOLTAGE

- Start the engine, raise the speed over 1000 RPM.
- Measure the charging voltage with the voltmeter at the battery positive and negative terminals.

Is the voltage less than 9 V?

Yes >> Check the charging system.

No >> Go to the next step.

5. CHECK THE BATTERY

- Start the engine, raise the speed over 1000 RPM for a few minutes.
- Turn ignition switch off.
- Measure the voltage drop with the voltmeter at the battery positive and negative terminals while cranking the engine.
- Battery voltage should be more than approximate 9 V.

Is the check result normal?

Yes >> Go to the next step.

No >> Charge or replace the battery.

6. CHECK INSTRUMENT CLUSTER (IC) SUPPLY CIRCUIT

- Disconnect the battery negative cable.
- Disconnect the battery positive cable.
- Measure the resistance between IC terminal 11, 13 and battery positive cable.
- Continuity should exist.

Is the check result normal?

Yes >> Go to the next step.

No >> Check fuse.
Check the harness open or short to ground.
Check related components.

7. CHECK SYSTEM VOLTAGE

- Start the engine, raise the speed over 1000 RPM.
- Measure the charging voltage with the voltmeter at the battery positive and negative terminals.

Is the voltage more than 17 V?

Yes >> Replace the AC generator.

No >> Go to the next step.

Downloaded from www.Manualslib.com manuals search engine

8. CHECK DTC

- With the X-431 scan tool, read IC DTCs.
- Refer to ″DTC Confirmation Procedure″.

Is the DTC U029C still present?

Yes >> Replace IC.

No >> The system is now operating properly.
Reassemble the vehicle and verify the customers complaint is repaired.

Downloaded from www.Manualslib.com manuals search engine

U040F - Temperature Sensor Shorted To Supply
U040F - Temperature Sensor Shorted To Ground (With Mitsubishi 2.4L Engine System)

Instrument Cluster (IC)

IC - COOL/T - 01 - 2.4L

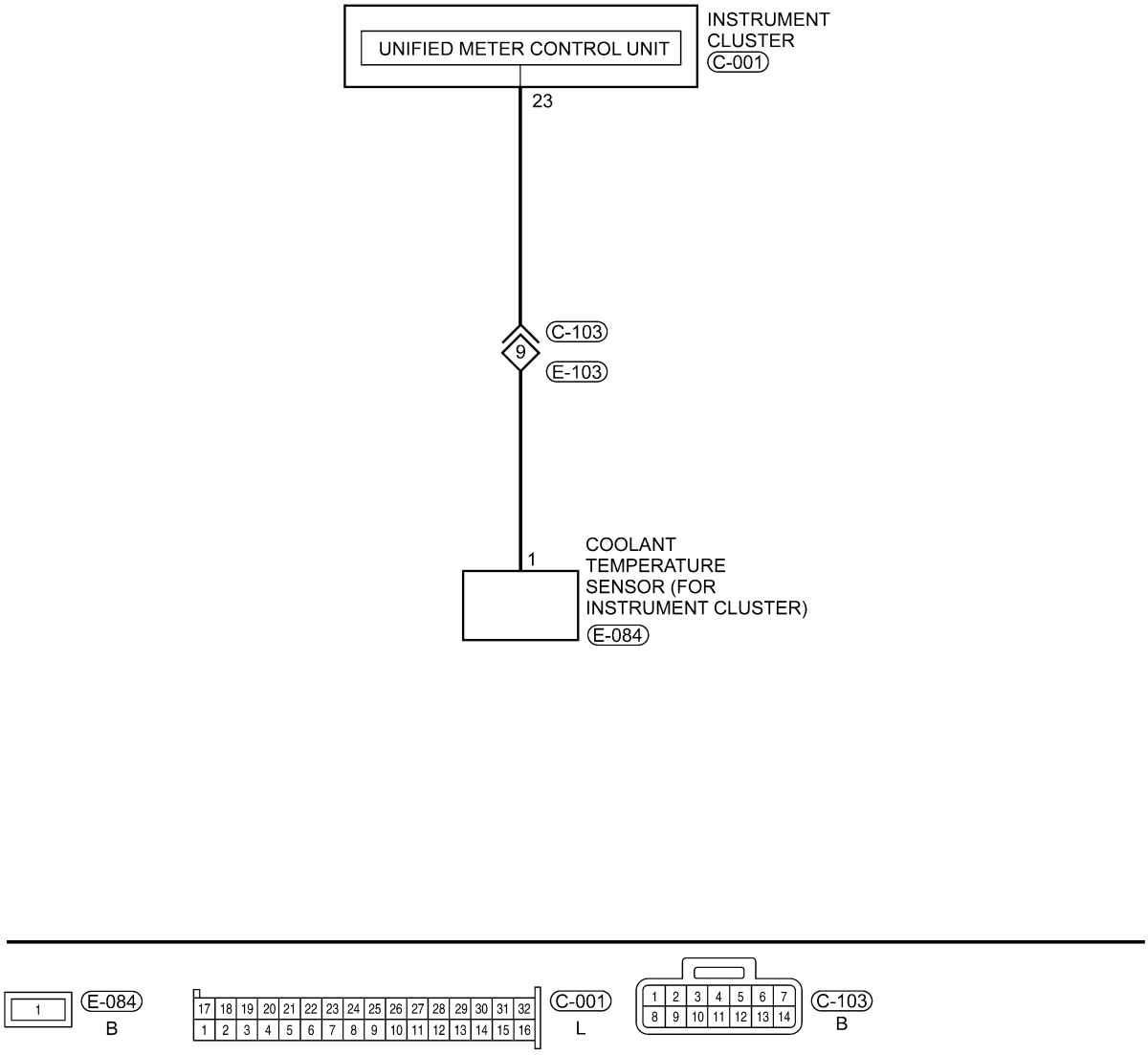

ltsmw150039t

Downloaded from www.Manualslib.com manuals search engine

On Board Diagnostic Logic

- Self-diagnosis detection logic.

DTC NO.	DTC DEFINITION	DTC DETECTION CONDITION	DTC SET CONDITION	POSSIBLE CAUSE
U040F	Temperature sensor open circuit or shorted to supply	Turn ignition switch on	The Instrument Cluster (IC) detects the temperature sensor (for instrument cluster) circuit open or shorted to supply condition.	• Coolant temperature sensor (For Instrument Cluster) • Harness or connectors (The sensor circuit is open or short to supply) • Instrument cluster
U040F	Temperature sensor shorted to ground		The Instrument Cluster (IC) detects the temperature sensor (for instrument cluster) circuit shorted to ground condition.	• Coolant temperature sensor (For instrument cluster) • Harness or connectors (The sensor circuit is short to ground) • Instrument cluster

DTC Confirmation Procedure:

Before performing the following procedure, confirm that battery voltage is more than 12 V.

- Turn ignition switch off.
- Connect the X-431 scan tool to the Data Link Connector (DLC) - use the most current software available.
- Turn ignition switch on and record and erase DTC.
- Start engine and warm it up to the normal operating temperature.
- Select view DTC and data stream.
- If the DTC is detected, the condition is current. Go to Diagnostic Procedure - Step 1.
- If the DTC is not detected, the DTC condition is intermittent (See Diagnostic Help and Intermittent DTC Troubleshooting in Section 15 Body & Accessories for more information).

NOTE :
Before performing any DTC diagnostic procedures, verify the IC power and ground circuits are properly connected.

NOTE :
While performing electrical diagnosis & testing, always refer to the electrical schematics for specific circuit and component information.

Downloaded from www.Manualslib.com manuals search engine

Diagnostic Procedure

1. CHECK DTC

- Turn ignition switch on, with the scan tool, view and erase stored DTCs in the IC module.
- Turn ignition switch off, and wait a few seconds, then turn ignition switch on.
- With the scan tool, view active DTCs in the IC module.

Is DTC U040F present?

Yes >> Go to the next step.

No >> The conditions that caused this DTC to set are not present at this time (See Intermittent DTC Troubleshooting in Section 15 Body & Accessories for more information).

2. CHECK COOLANT TEMPERATURE SENSOR (FOR INSTRUMENT CLUSTER) ELECTRICAL CONNECTOR

- Turn ignition switch off.
- Disconnect the coolant temperature sensor (for instrument cluster) (1) electrical connector E-084.
- Inspect the electrical connector for damage.

Is the electrical connector OK?

Yes >> Go to the next step.

No >> Repair or replace the electrical connector as necessary.

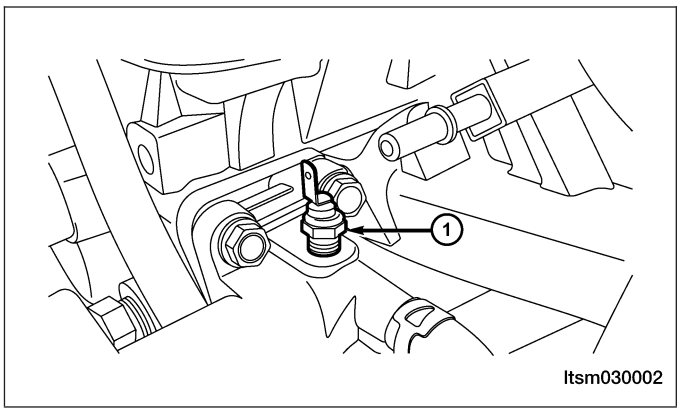

3. CHECK COOLANT TEMPERATURE SENSOR (FOR INSTRUMENT CLUSTER) REFERENCE VOLTAGE

- Turn ignition switch on.
- Check reference voltage between the coolant temperature sensor (for instrument cluster) connector E-084, terminal 1 and ground.
- Approximately 5 V should exist.

Is the reference voltage normal?

Yes >> Go to step 5.

No >> Go to the next step.

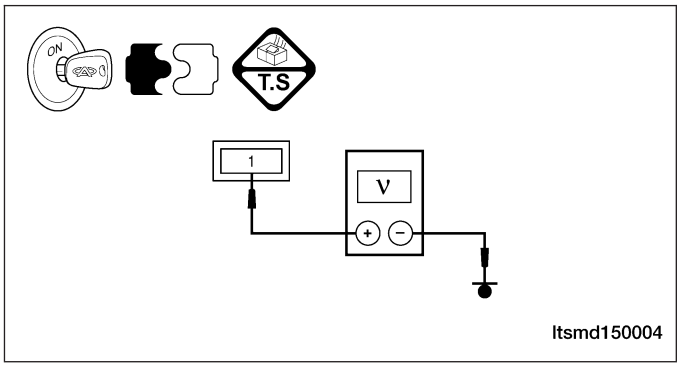

Downloaded from www.Manualslib.com manuals search engine

4. CHECK COOLANT TEMPERATURE SENSOR (FOR INSTRUMENT CLUSTER) REFERENCE VOLTAGE

- Turn ignition switch off.
- Disconnect the IC module connector.
- Check harness for a short to ground.
- Check the coolant temperature sensor circuit for voltage.

COOLANT TEMPERATURE SENSOR (FOR INSTRUMENT CLUSTER) TERMINAL	GROUND
1	Ground

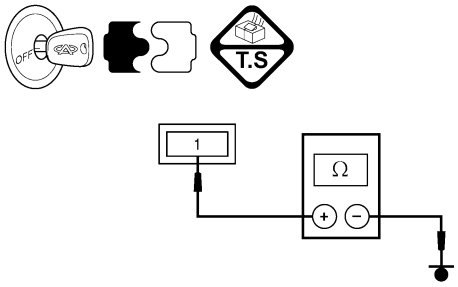

ltsmd150006

- Check the coolant temperature sensor circuit for resistance.

COOLANT TEMPERATURE SENSOR (FOR INSTRUMENT CLUSTER) TERMINAL	IC TERMINAL	CONTINUITY
1	31	Yes

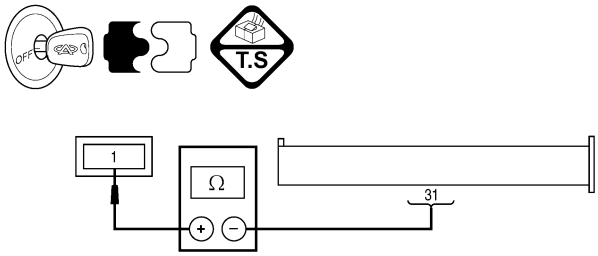

ltsmd150005

- Check harness for a short to power.

Is the check result normal?

Yes >> Go to the next step.

No >> Repair or replace the coolant temperature sensor (for instrument cluster) supply circuit as necessary.

Downloaded from www.Manualslib.com manuals search engine

5. CHECK COOLANT TEMPERATURE METER INDICATOR

- Turn ignition switch off.
- Connect the IC connector.
- Connect the coolant temperature sensor (for instrument cluster) electrical connector E-084.
- Turn ignition switch on.
- With the scan tool, view active DTCs and data stream in the IC.

Is DTC U040F still present?

Yes >> Replace the coolant temperature sensor (for instrument cluster).
With the scan tool, view active DTCs and data stream in the IC.
– If the DTC U040F is not present, the system is now normal.
– If the DTC U040F is present, go to the next step.

No >> The system is now operating properly.
Reassemble the vehicle and verify the customers complaint is repaired.

6. CHECK DTC

- With the X-431 scan tool, read IC DTCs.
- Refer to ″DTC Confirmation Procedure″.

Is DTC U040F still present?

Yes >> Replace the IC.

No >> The system is now operating properly.
Reassemble the vehicle and verify the customers complaint is repaired.

Downloaded from www.Manualslib.com manuals search engine

U050F - EEPROM Checksum Error

On Board Diagnostic Logic

- Self-diagnosis detection logic.

DTC NO.	DTC DEFINITION	DTC DETECTION CONDITION	POSSIBLE CAUSE
U050F	EEPROM checksum error	Instrument Cluster (IC) detected an internal failure	• Instrument Cluster (IC)

DTC Confirmation Procedure:

Before performing the following procedure, confirm that battery voltage is more than 12 V.

- Turn ignition switch off.
- Connect the X-431 scan tool to the Data Link Connector (DLC) - use the most current software available.
- Turn ignition switch on and record and erase DTC.
- Start engine and warm it up to the normal operating temperature.
- Select view DTC and data stream.
- If the DTC is detected, the condition is current. Go to Diagnostic Procedure - Step 1.
- If the DTC is not detected, the DTC condition is intermittent (See Diagnostic Help and Intermittent DTC Troubleshooting in Section 15 Body & Accessories for more information).

NOTE :
While performing electrical diagnosis & testing, always refer to the electrical schematics for specific circuit and component information.

Downloaded from www.Manualslib.com manuals search engine

Diagnostic Procedure

1. CHECK DTC

- Perform DTC confirmation procedure.

Is DTC U050F present?

Yes >> Go to the next step.

No >> The conditions that caused this DTC to set are not present at this time (See Intermittent DTC Troubleshooting in Section 15 Body & Accessories for more information).

2. CHECK INSTRUMENT CLUSTER (IC) POWER SUPPLY AND GROUND

- Check the Instrument Cluster (IC) supply voltage circuit and ground circuits for open, high resistance or short circuits.

Is the check result normal?

Yes >> Go to the next step.

No >> Repair the circuit for an open or short in harness and connectors.

3. CHECK DTC

- With the X-431 scan tool, read Instrument Cluster (IC) DTCs.
- Refer to ″DTC Confirmation Procedure″.

Is DTC U050F present?

Yes >> The system is now operating properly.
Reassemble the vehicle and verify the customers complaint is repaired.

No >> Replace Instrument Cluster (IC).

Downloaded from www.Manualslib.com manuals search engine

U0303 - Fuel Sensor Open Circuit Or Shorted To Supply
U0303 - Fuel Sensor Short To Ground

IC - FLS - 01

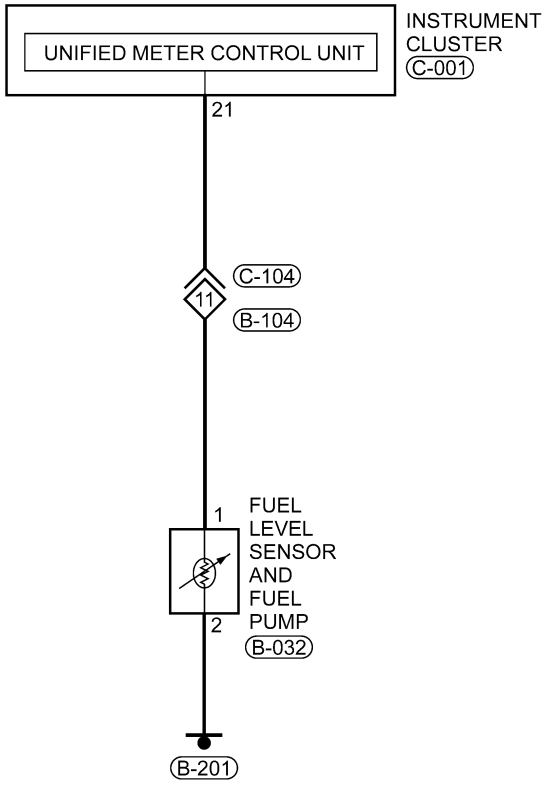

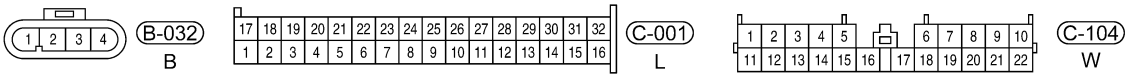

ltsmw150040t

Downloaded from www.Manualslib.com manuals search engine

On Board Diagnostic Logic

- Self-diagnosis detection logic.

DTC NO.	DTC DEFINITION	DTC DETECTION CONDITION	DTC SET CONDITION	POSSIBLE CAUSE
U0303	Fuel sensor open circuit or shorted to supply	Turn ignition switch on	The Instrument Cluster (IC) detects the fuel sensor shorted to ground condition.	• Fuel level sensor • Harness or connectors (The sensor circuit is open or short to power) • Instrument cluster
U0303	Fuel sensor shorted to ground		The Instrument Cluster (IC) detects the fuel sensor circuit open or shorted to voltage condition.	• Fuel level sensor • Harness or connectors (The sensor circuit is shorted to ground) • Instrument cluster

DTC Confirmation Procedure:

Before performing the following procedure, confirm that battery voltage is more than 12 V.

- Turn ignition switch off.
- Connect the X-431 scan tool to the Data Link Connector (DLC) - use the most current software available.
- Turn ignition switch on and record and erase DTC.
- Start engine and warm it up to the normal operating temperature.
- Select view DTC and data stream.
- If the DTC is detected, the condition is current. Go to Diagnostic Procedure - Step 1.
- If the DTC is not detected, the DTC condition is intermittent (See Diagnostic Help and Intermittent DTC Troubleshooting in Section 15 Body & Accessories for more information).

NOTE :
Before performing any DTC diagnostic procedures, verify the IC power and ground circuits are properly connected.

NOTE :
While performing electrical diagnosis & testing, always refer to the electrical schematics for specific circuit and component information.

Downloaded from www.Manualslib.com manuals search engine

Diagnostic Procedure

1. CHECK DTC

- Turn ignition switch on, with the scan tool, view and erase stored DTCs in the IC.
- Turn ignition switch off, and wait a few seconds, then turn ignition switch on.
- With the scan tool, view DTCs in the IC.

Is DTC U0303 present?

Yes >> Go to the next step.

No >> The conditions that caused this DTC to set are not present at this time (See Intermittent DTC Troubleshooting in Section 15 Body & Accessories for more information).

2. CHECK FUEL LEVEL SENSOR ELECTRICAL CONNECTOR

- Turn ignition switch off.
- Disconnect the fuel level sensor and fuel pump assembly electrical connector (3).
- Inspect the electrical connector for damage.

Is the electrical connector OK?

Yes >> Go to the next step.

No >> Repair or replace the electrical connector as necessary.

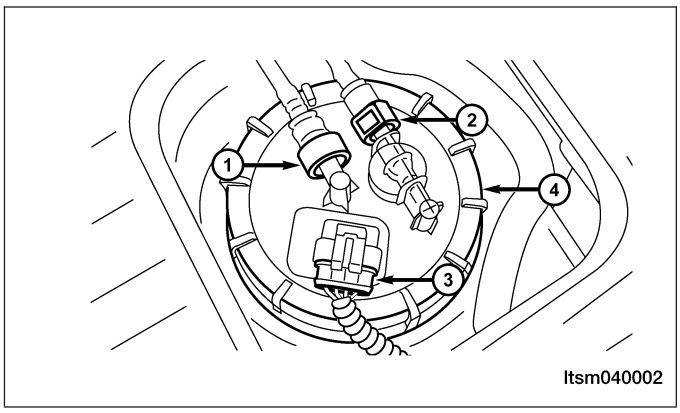

3. CHECK FUEL LEVEL SENSOR REFERENCE VOLTAGE

- Turn ignition switch on.
- Check the fuel level sensor reference voltage between the fuel level sensor connector B-032, terminal 1 and ground.
- The voltage (less than 1 V) should exist.

Is there voltage present?

Yes >> Go to step 5.

No >> Go to the next step.

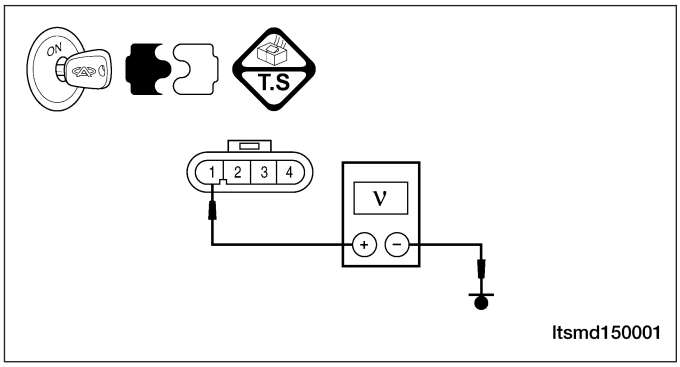

15

Downloaded from www.Manualslib.com manuals search engine

4. CHECK FUEL LEVEL SENSOR CIRCUIT FOR OPEN OR SHORT

- Turn ignition switch off.
- Disconnect the IC connector.
- Check harness for a short to ground.

FUEL LEVEL SENSOR TERMINAL	GROUND
1	Ground

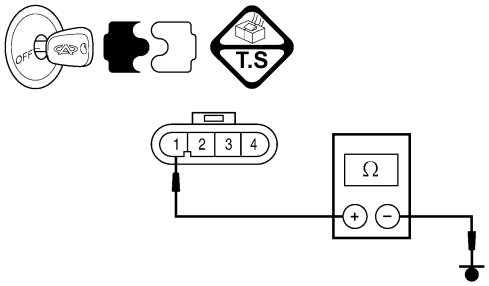

ltsmd150003

- Check for continuity between the following terminals:

FUEL LEVEL SENSOR TERMINAL	IC TERMINAL	CONTINUITY
1	21	Yes

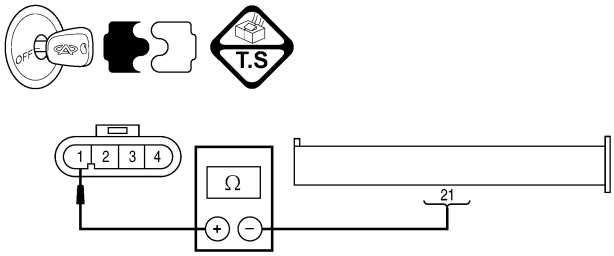

ltsmd150002

- Continuity should exist.
- Check the harness for a short to power.

Is the check result normal?

Yes >> Go to the next step.

No >> Repair or replace the fuel level sensor supply circuit as necessary.

5. CHECK FUEL LEVEL SENSOR GROUND CIRCUIT

- Using a 12 V test light connected to battery (+), probe fuel level sensor ground circuit.

Does the test light illuminate brightly?

Yes >> Go to the next step.

No >> Repair or replace the fuel level sensor ground circuit for an open.

Downloaded from www.Manualslib.com manuals search engine

6. CHECK FUEL LEVEL SENSOR RESISTANCE

- Turn ignition switch off.
- Check fuel level sensor as follows:

FUEL GAUGE POINTER POSITION	TANK (LITERS)	SENDER RESISTANCE (OHM)	POINTER TOLERANCE
EMPTY	5	283	±3 °
RESERVE	11	189	±3 °
1/4	16.5	137	±3 °
1/2	28	89	±3 °
3/4	39.5	62	±3 °
FULL	51	40	±3 °

Is the check result normal?

Yes >> Go to the next step.

No >> Replace the fuel level sensor.

7. CHECK DTC

- With the X-431 scan tool, read IC DTCs.
- Refer to ″DTC Confirmation Procedure″.

Is the DTC U0303 still present?

Yes >> Replace the IC.

No >> The system is now operating properly.
Reassemble the vehicle and verify the customers complaint is repaired.

Downloaded from www.Manualslib.com manuals search engine

ON-VEHICLE SERVICE

Instrument Cluster

Removal & Installation

1. Disconnect he negative battery cable.
2. Carefully remove the instrument cluster trim panel.
3. Remove the instrument cluster screws (1).
   (Tighten: Instrument cluster screws to 5 N·m)

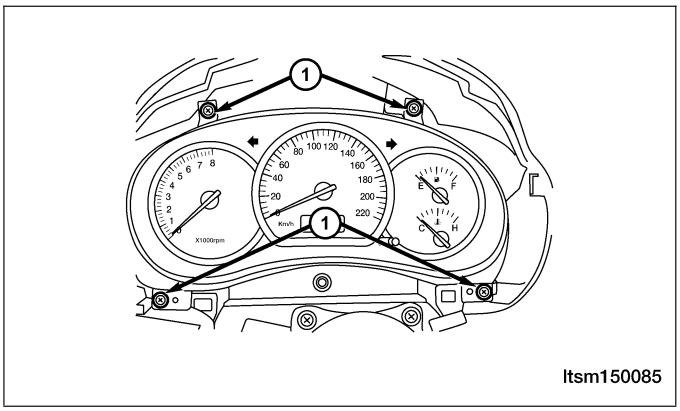

ltsm150085

4. Disconnect the instrument cluster electrical connector.
5. Remove the instrument cluster.
6. Installation is in the reverse order of removal.

Downloaded from www.Manualslib.com manuals search engine

INTERIOR LAMPS

Description

The interior lamps consist of the following:

- Key Hole Lamp
- Front Room Lamp
- Middle/Rear Courtesy/Dome Lamp
- Front Step Lamp
- Backlight Adjusting Switch
- Instrument Cluster
- Headlamp Aiming Switch
- Heated Seat Switch (LH)
- Heated Seat Switch (RH)
- Air Control Panel
- Front Fog Lamp Switch
- Rear Fog Lamp Switch
- Console Power Socket (Illumination)
- Door Mirror Remote Control Switch
- Main Power Window And Door Lock/Unlock Switch
- Front Power Window Switch (RH)
- Rear Power Window Switch (LH)
- Rear Power Window Switch (RH)
- Audio

Operation

The key hole lamp and front/middle/rear courtesy lamps are controlled by the BCM. Front step lamps are controlled by the door lock switch. When the door is open, the front step lamp will light up automatically. Other lamps are controlled by the lighting and turn signal switch.

Downloaded from www.Manualslib.com manuals search engine

Electrical Schematics

Interior Lamps (Page 1 of 5)

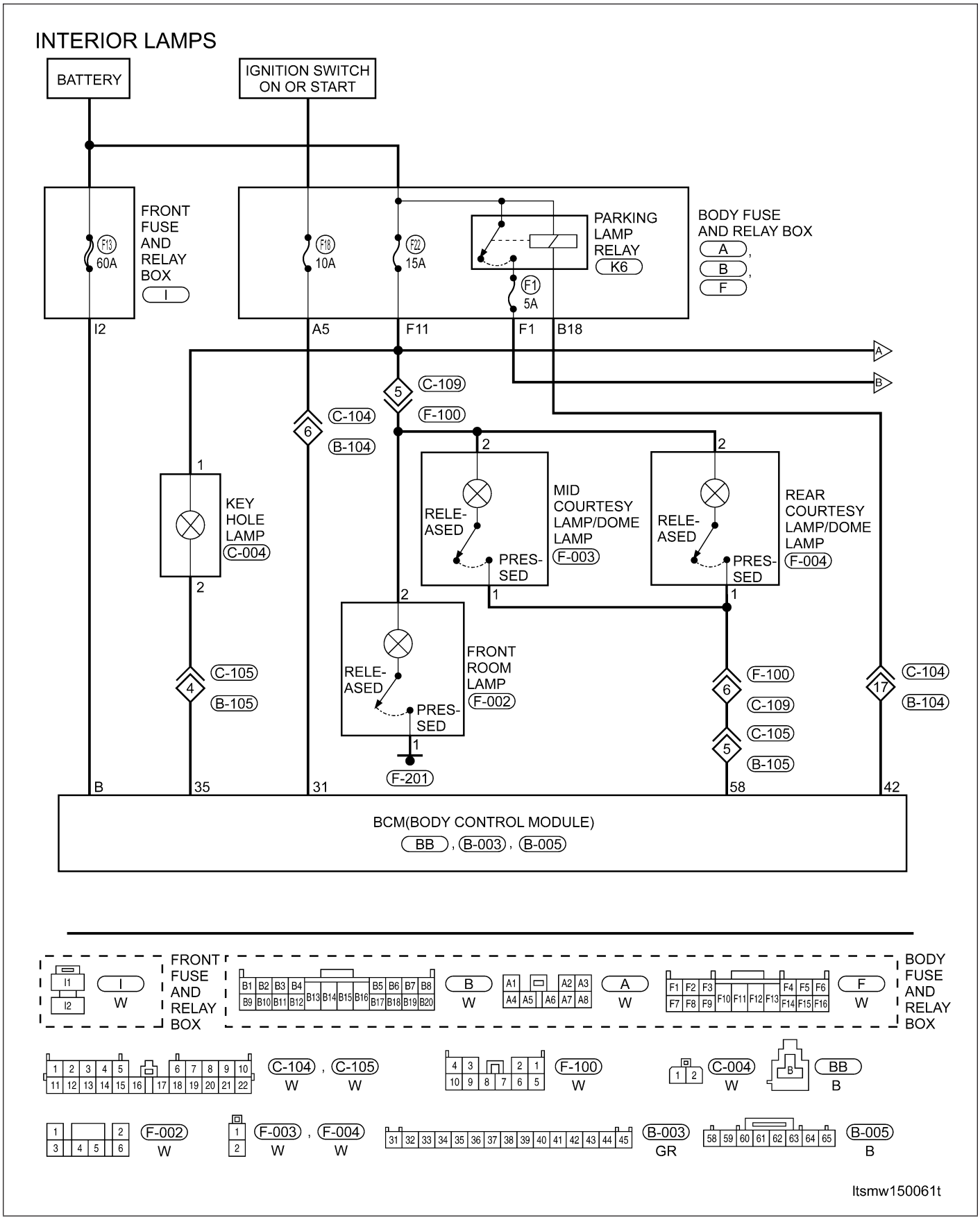

Downloaded from www.Manualslib.com manuals search engine

Interior Lamps (Page 2 of 5)

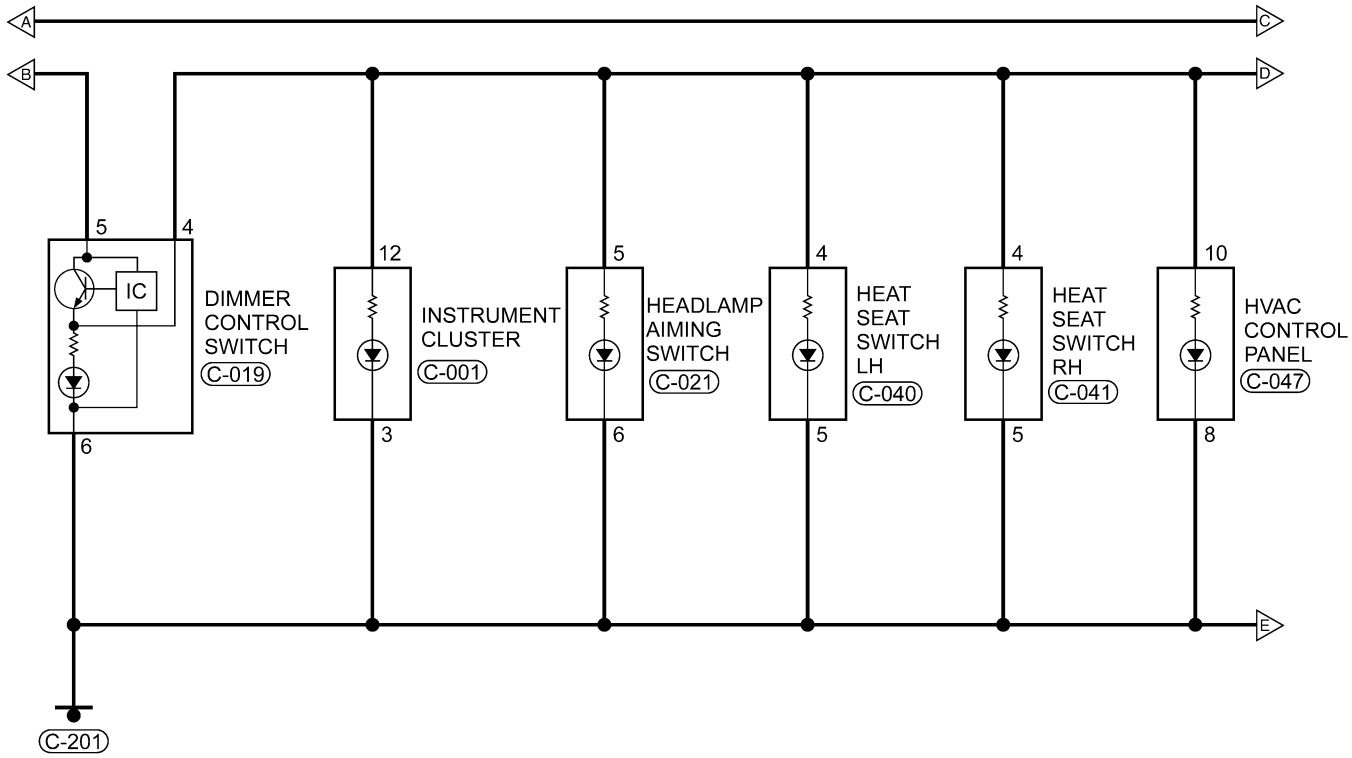

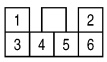

C-019 , C-021 , C-040 , C-041

B GR L G

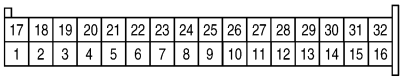

C-001

L

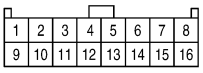

C-047

B

ltsmw150062t

Downloaded from www.Manualslib.com manuals search engine

Interior Lamps (Page 3 of 5)

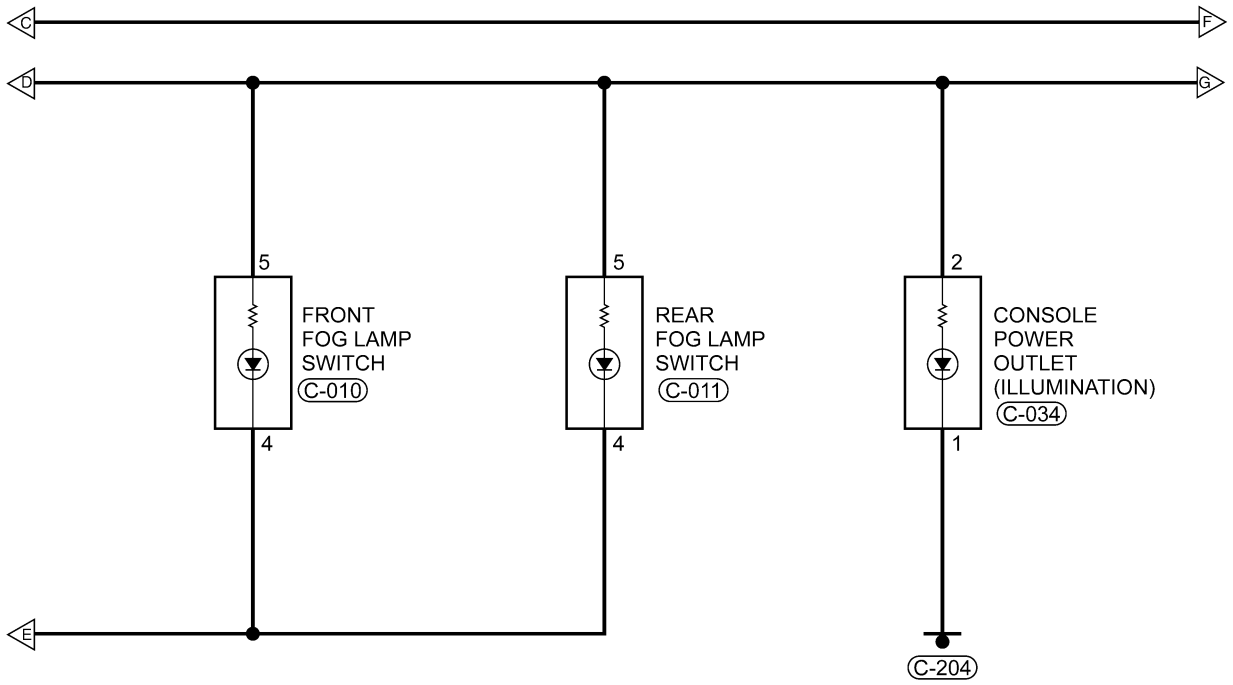

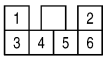

C-010 , C-011
W Y

C-034
W

ltsmw150063t

Downloaded from www.Manualslib.com manuals search engine

Interior Lamps (Page 4 of 5)

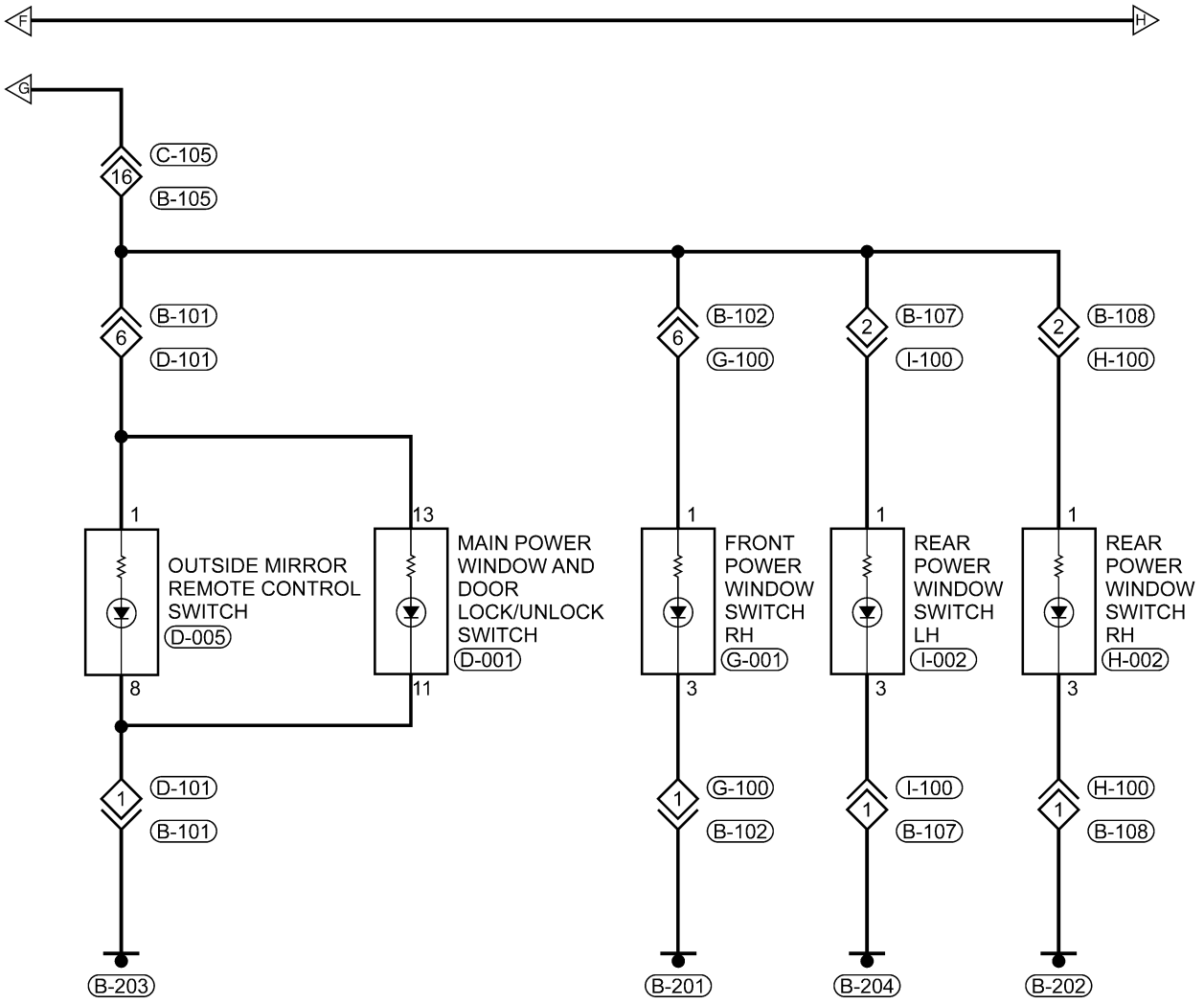

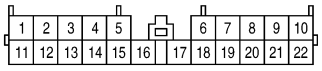

C-105
W

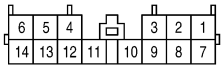

B-101 , B-102 , I-100 , H-100
W W W W

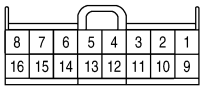

D-001
W

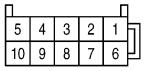

D-005 , G-001 , I-002 , H-002
B B B B

ltsmw150064t

Downloaded from www.Manualslib.com manuals search engine

Interior Lamps (Page 5 of 5)

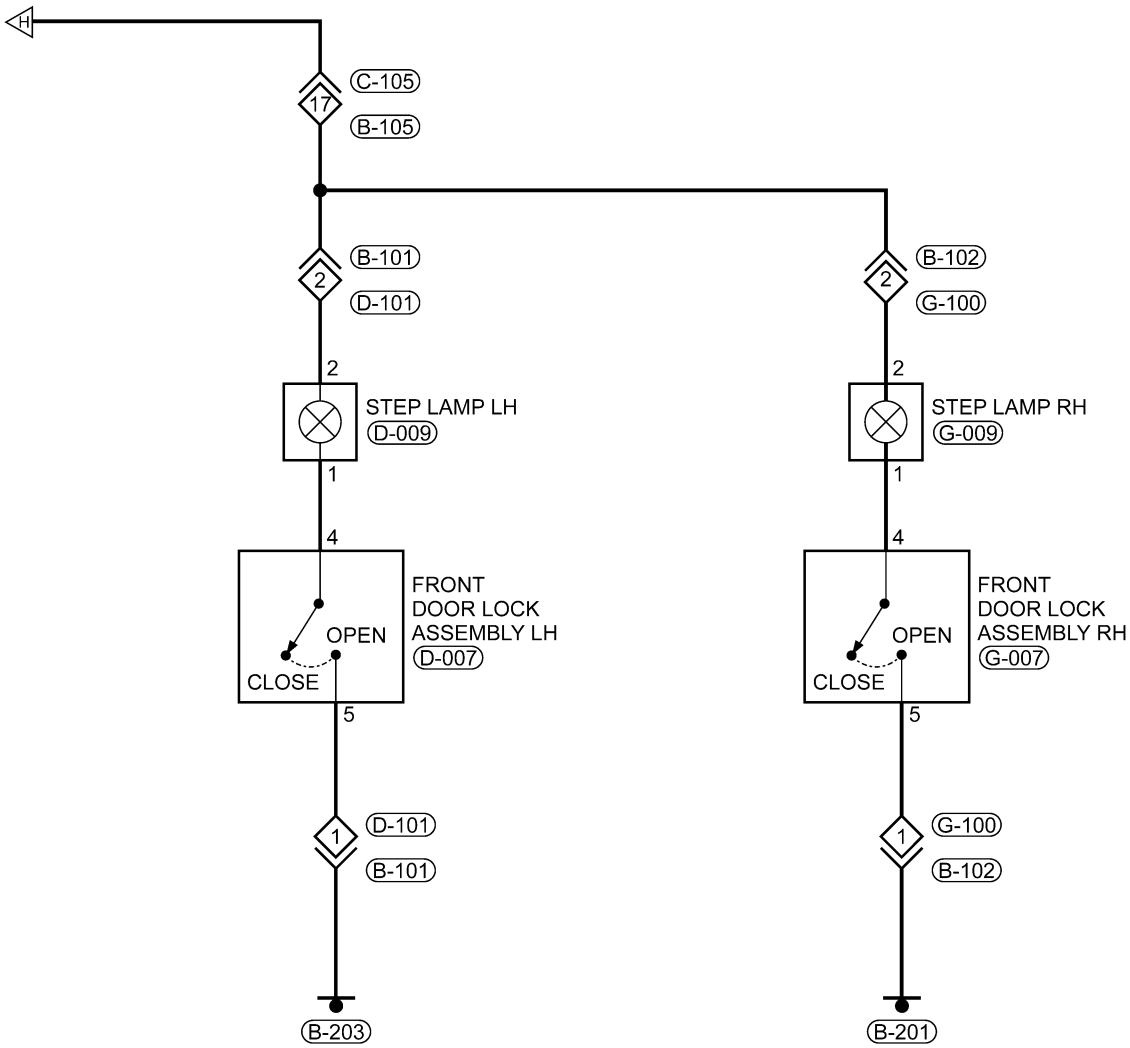

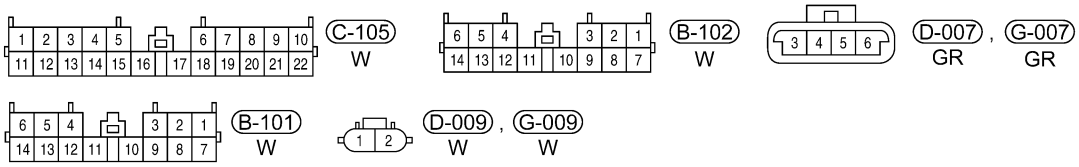

ltsmw150086t

Downloaded from www.Manualslib.com manuals search engine

Front Room Lamp

Removal & Installation

1. Open the overhead eye glass compartment.
2. Remove the eye glass compartment screws (1).

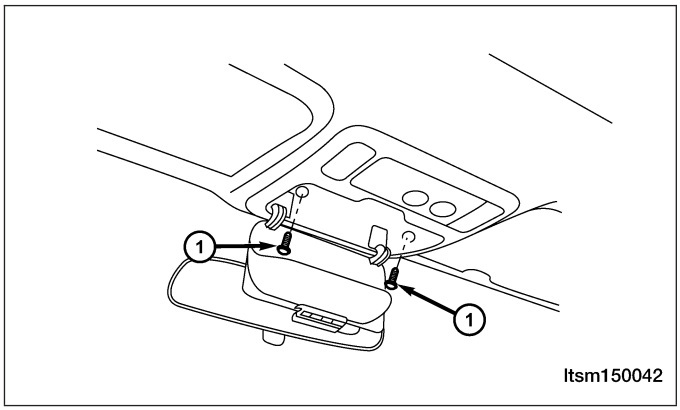

3. Carefully remove the front room lamp and disconnect the electrical connector.
4. Installation is in the reverse order of removal.

Middle/Rear Courtesy/Dome Lamp

Removal & Installation

1. Carefully pry the lamp cover from the lamp housing.

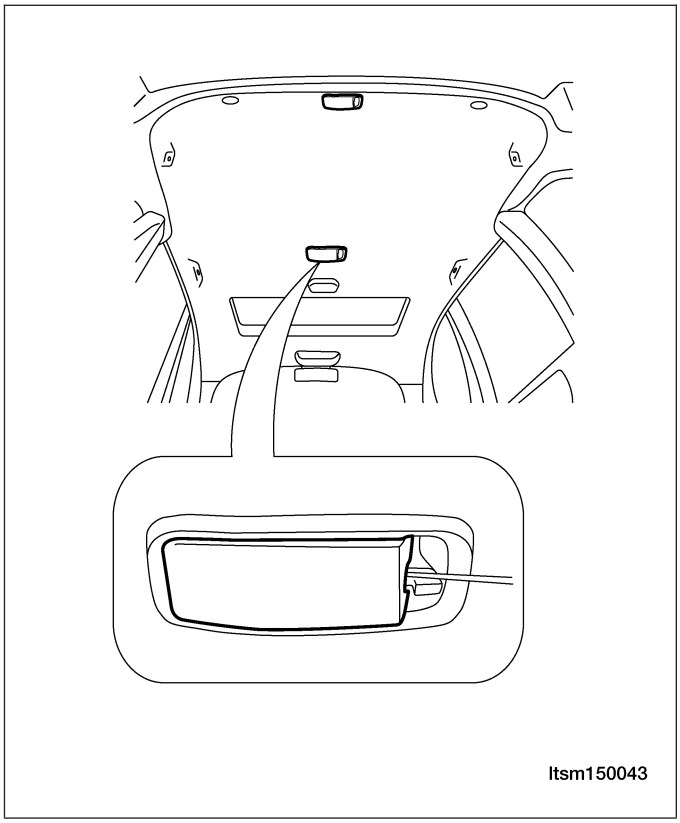

Downloaded from www.Manualslib.com manuals search engine

2. Remove the lamp mounting screws (1).

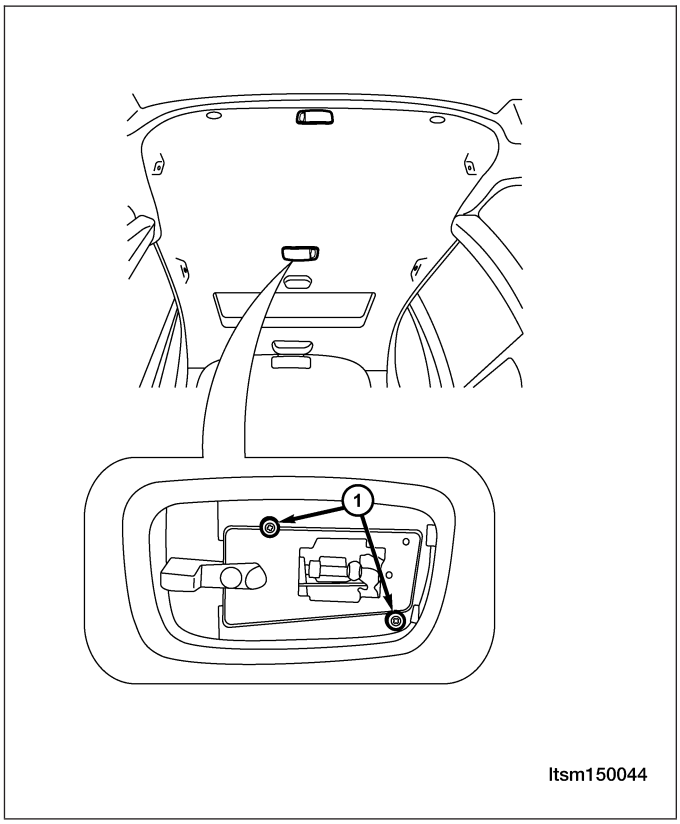

3. Remove the courtesy/dome lamp.

NOTE :
The rear courtesy/dome lamp is similar to the middle courtesy/dome lamp.

4. Installation is in the reverse order of removal.

Key Hole Lamp

Removal & Installation

1. Disconnect the negative battery cable.
2. Turn the ignition switch off.
3. Remove the steering column shroud retaining screws (1).

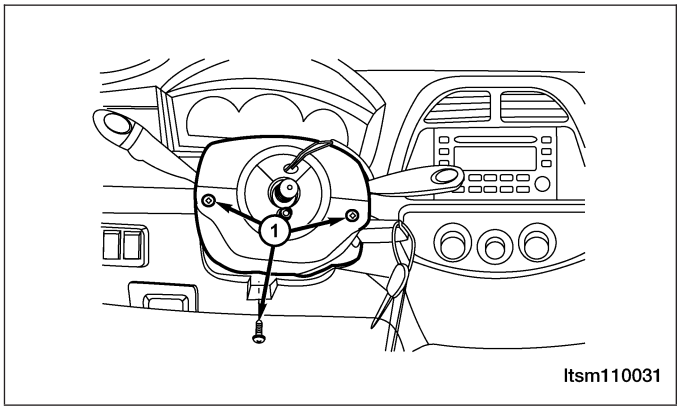

4. Disconnect the key hole lamp electrical connector.
5. Remove the key hole lamp.
6. Installation is in the reverse order of removal.

Downloaded from www.Manualslib.com manuals search engine

POWER OUTLET

Description

There are two 12 V electrical outlets. One is under the center console which is for the cigarette lighter. The other is located on the left lower C-pillar trim panel.

CAUTION:
This power outlet is designed for 12 V (120W) only. Do not use any type of accessory above this rating.

Operation

The power outlets are powered at all times.

Downloaded from www.Manualslib.com manuals search engine

Electrical Schematics

Power Outlet (Page 1 of 1)

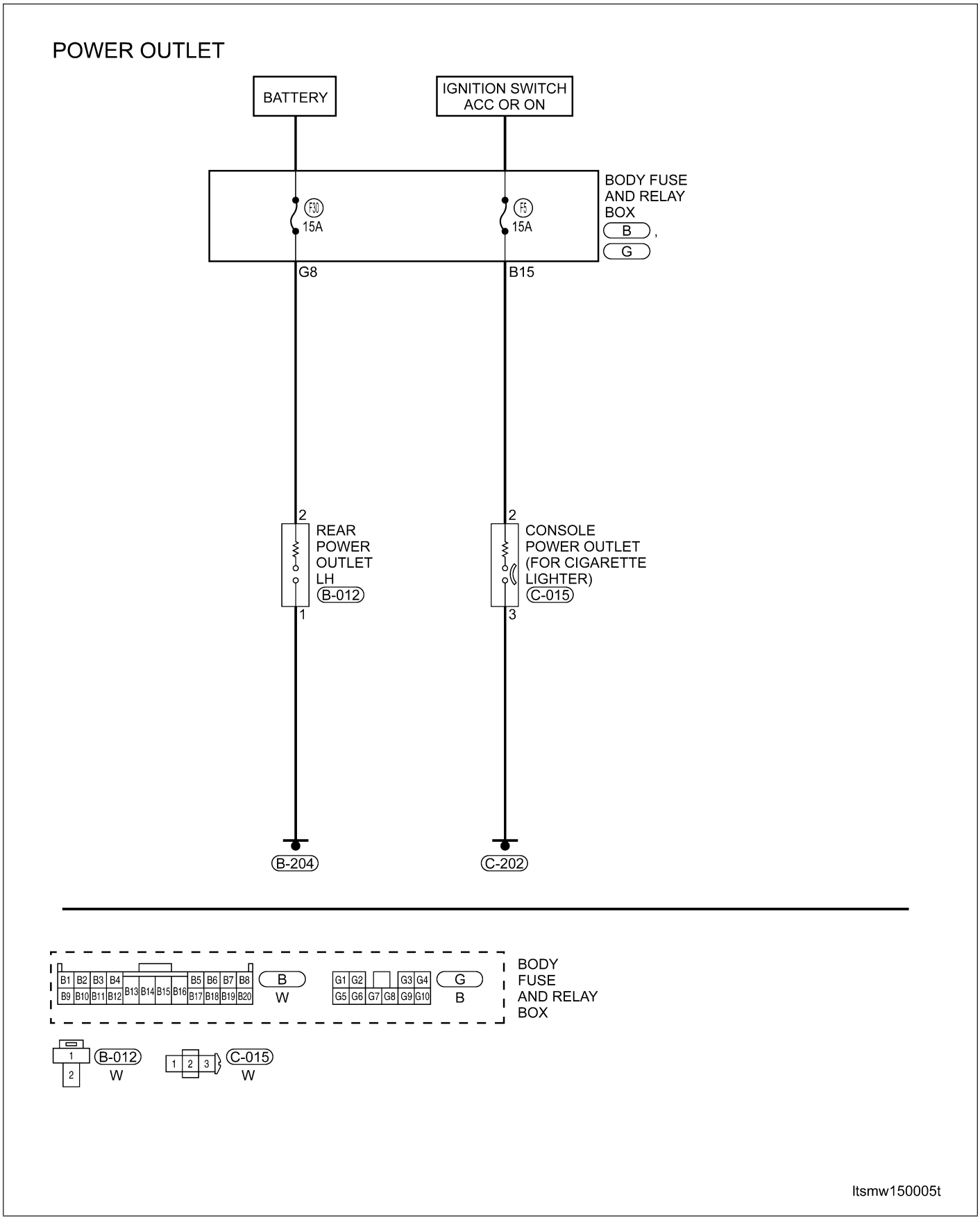

Downloaded from www.Manualslib.com manuals search engine

Removal & Installation

1. Disconnect the negative battery cable.
2. Remove the power outlet (1).
3. Disconnect the power outlet electrical connector.
4. Installation is in the reverse order of removal.

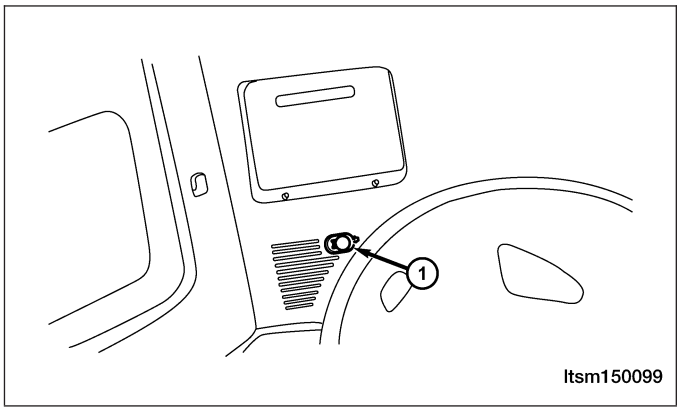

Downloaded from www.Manualslib.com manuals search engine

POWER WINDOW

Description

The power window system allows each of the door windows to be raised and lowered electrically by actuating a switch on each door trim panel. The driver window switch allows the driver to lock out the front passenger window and rear window from operation. The power window system includes the power window switches on the driver door trim panel, front passenger door and rear doors, and the power window motors.

Operation

The front and rear power window motors are permanent magnet type. A battery positive and negative connection to either of the two motor terminals will cause the motor to rotate in one direction. Reversing current through these same two connections will cause the motor to rotate in the opposite direction. Each individual motor is grounded through the BCM.

Downloaded from www.Manualslib.com manuals search engine

Electrical Schematics

Power Window System (Page 1 of 3)

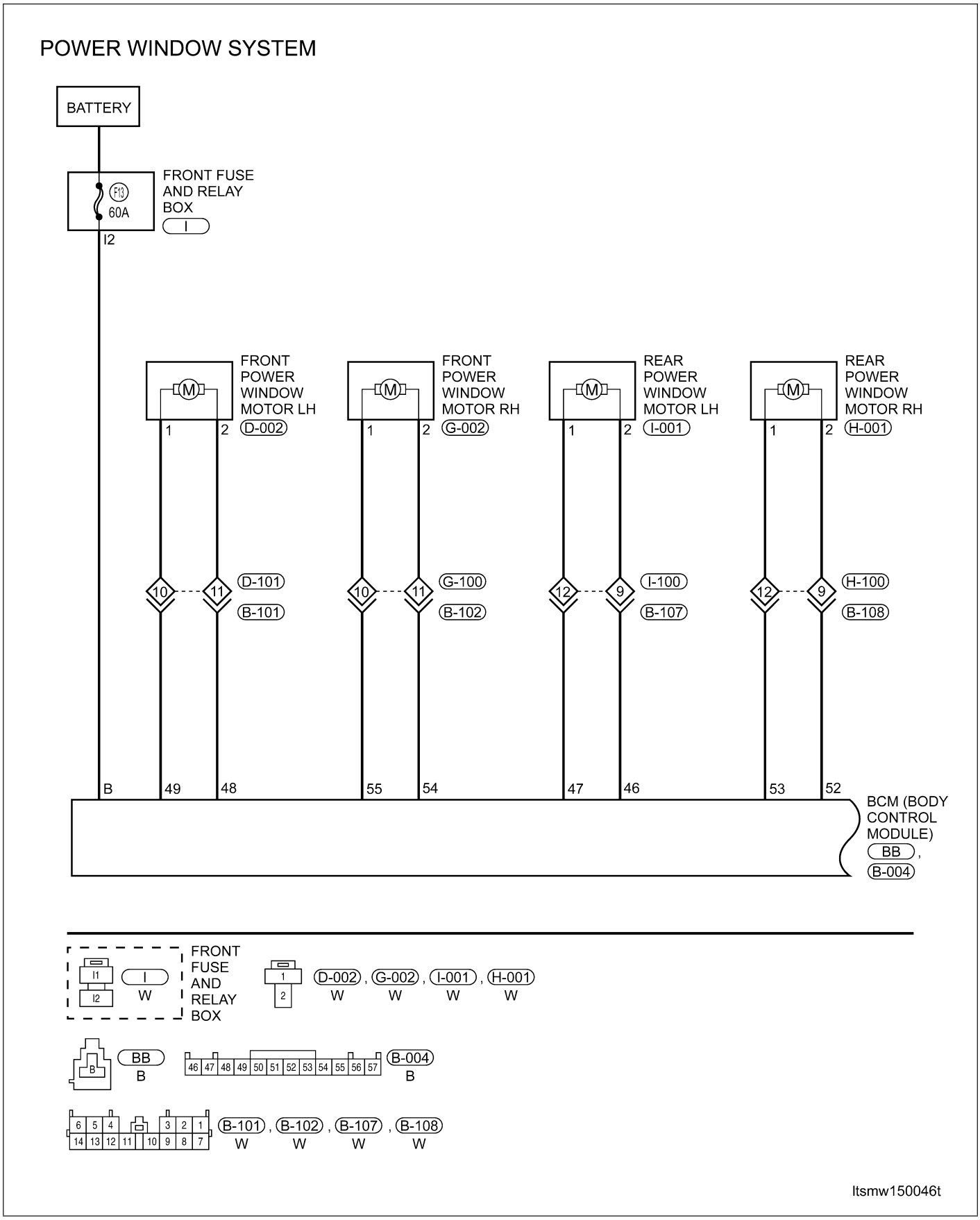

Downloaded from www.Manualslib.com manuals search engine

Power Window System (Page 2 of 3)

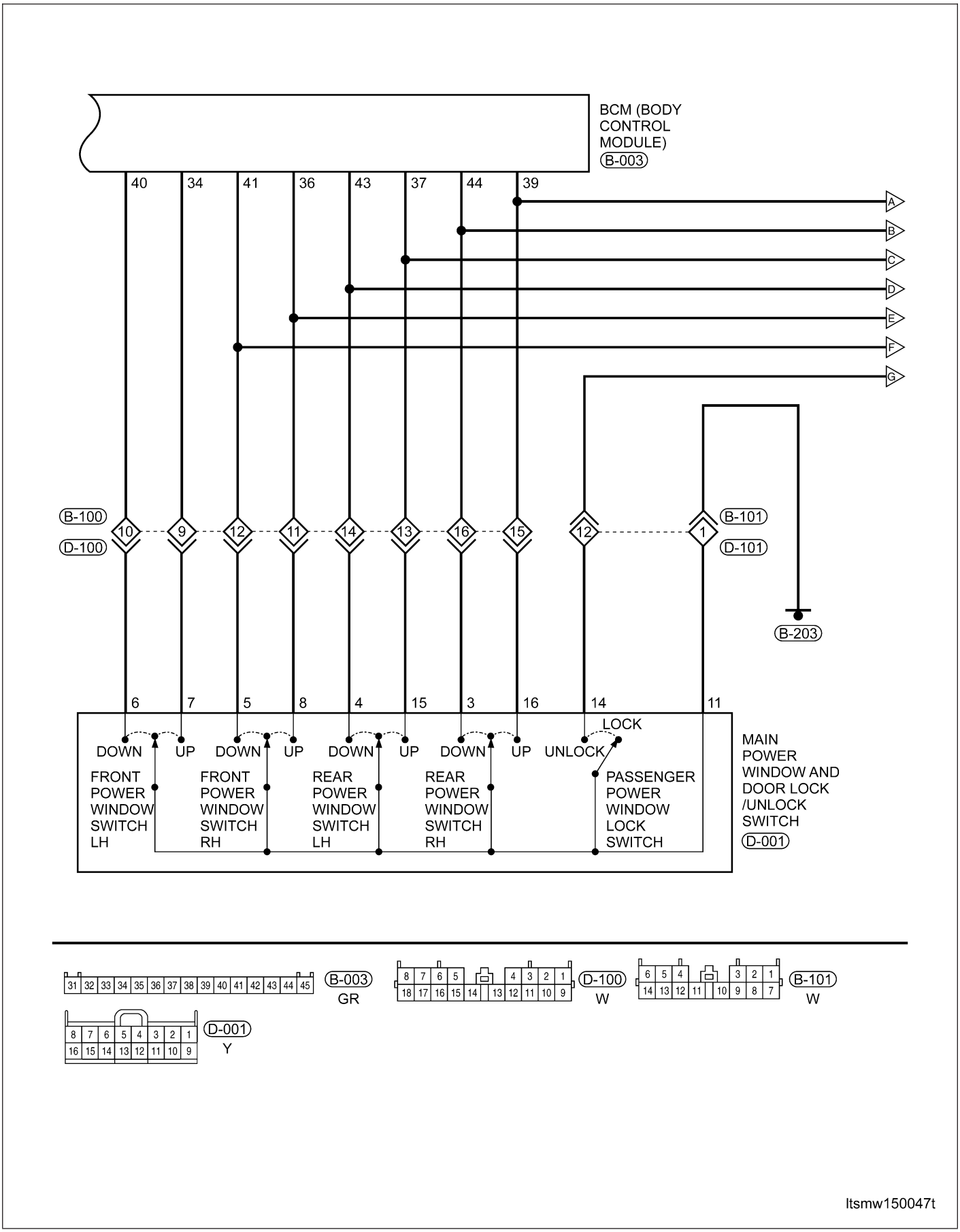

Downloaded from www.Manualslib.com manuals search engine

Power Window System (Page 3 of 3)

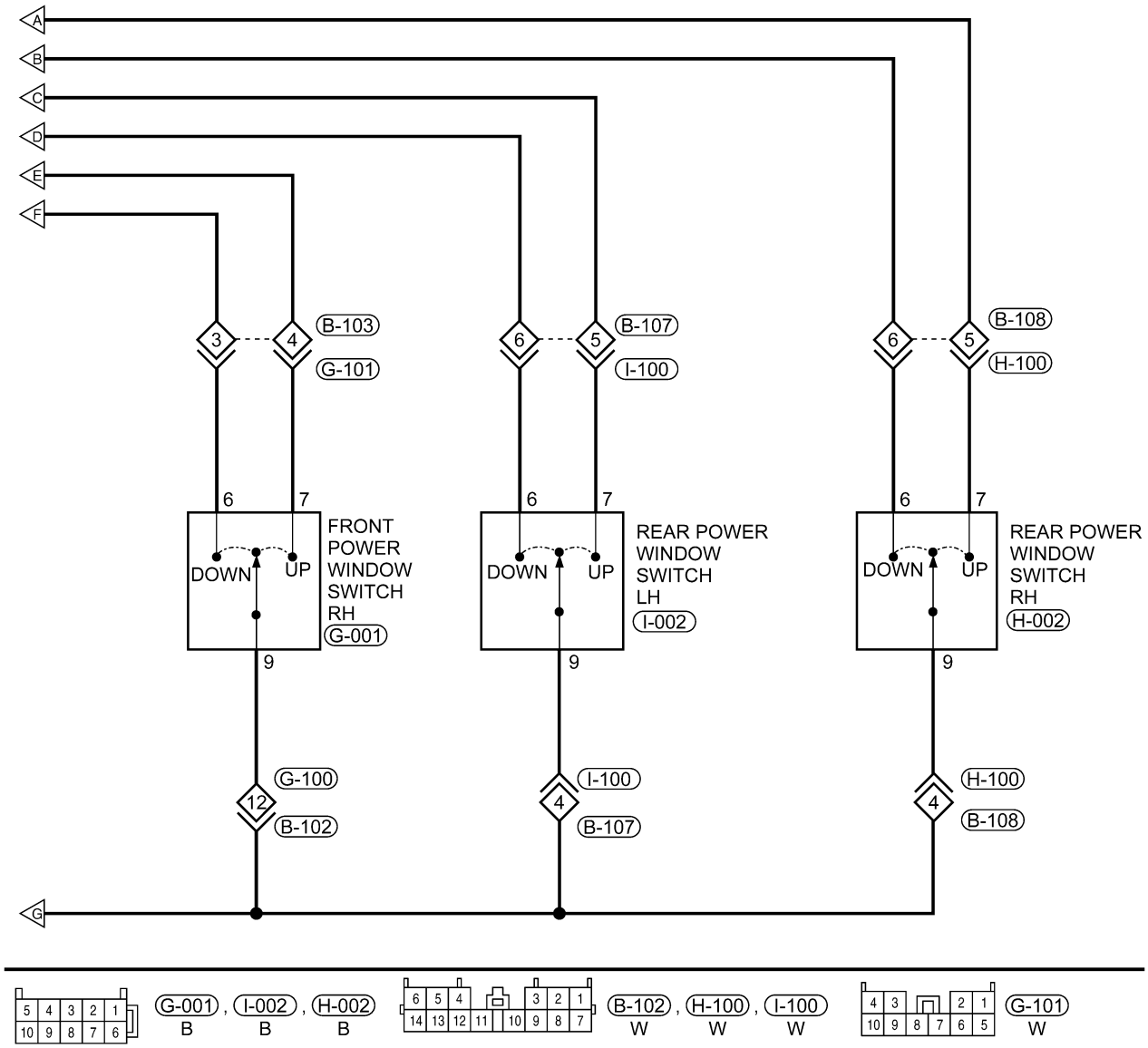

ltsmw150048t

Downloaded from www.Manualslib.com manuals search engine

Power Window Switch

Removal & Installation

1. Turn the ignition switch off.
2. Remove the power window and door lock/unlock switch bezel mounting screw (1).

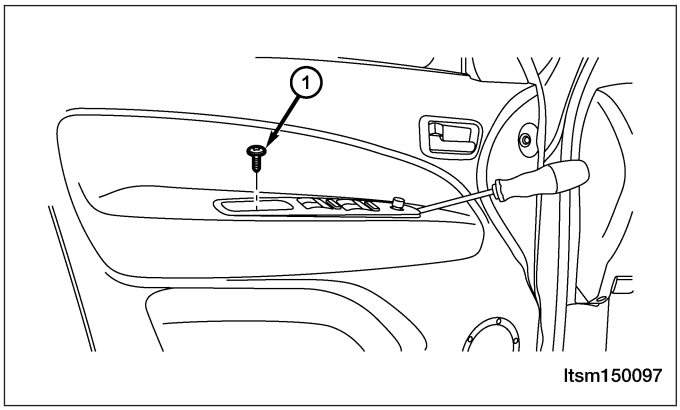

3. Using a trim stick, pry out the power window and door lock/unlock switch assembly from the front door.
4. Disconnect the power window and door lock/unlock switch electrical connectors.
5. Remove the power window and door lock/unlock switch retaining screws to remove the power window and door lock/unlock switch.
6. Installation is in the reverse order of removal.

Power Window Motor

Removal & Installation

NOTE :
The passenger door is shown, all other doors are similar.

1. Turn the ignition switch off.
2. Using a small trim stick, remove the pull handle cover (1) from the pull handle (2).

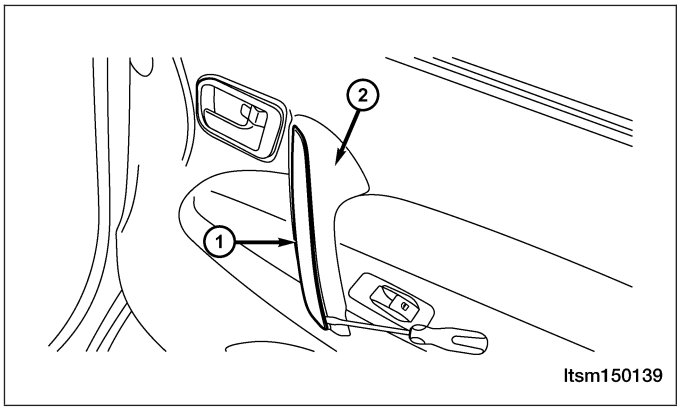

Downloaded from www.Manualslib.com manuals search engine

3. Remove the inner door handle mounting screw (1).
4. Remove the pull handle mounting screws (2).

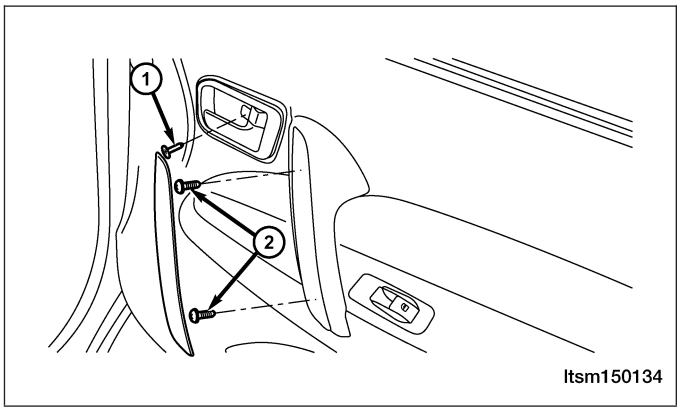

5. Using a small trim stick, remove the inner door handle trim bezel (1).

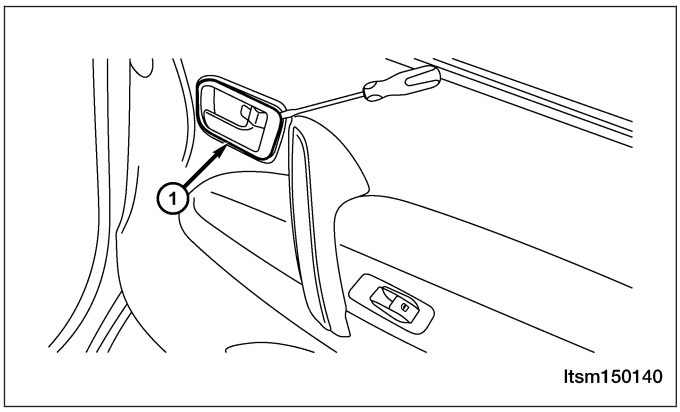

6. Carefully pry the door trim panel clips from the door.
7. Disconnect the power window switch and the door lamp electrical connector.
8. Remove the door trim panel.
9. Disconnect the speaker connector (1).
10. Remove the inner door handle assembly mounting screw (2).
11. Disconnect the inner door handle cables (3).
12. Remove the protective film (4).

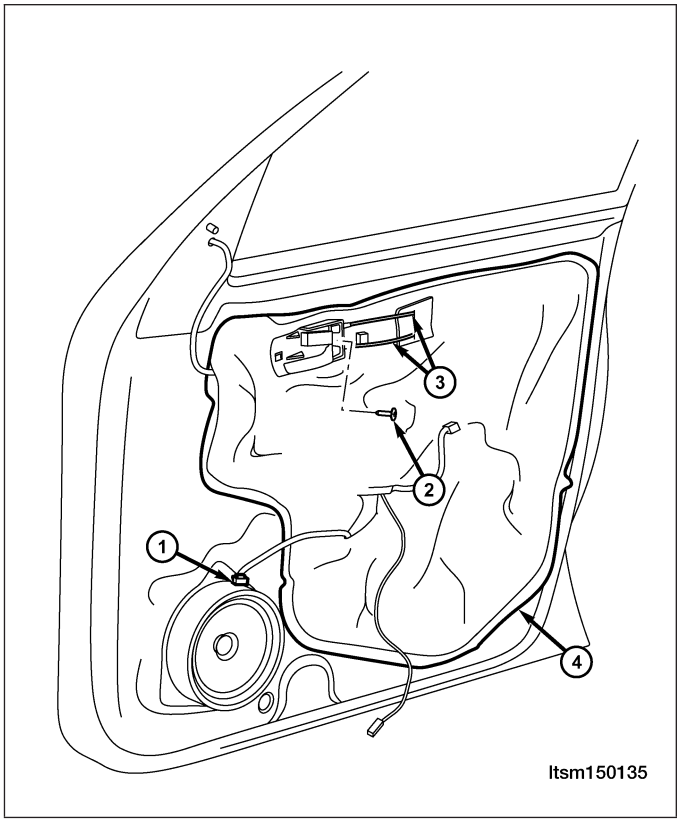

Downloaded from www.Manualslib.com manuals search engine

13. Temporarily connect the power window switch.
14. Turn the ignition switch on and use the power window switch to move the front door glass to a position so the door glass bolts can be removed.
15. Turn the ignition switch off and disconnect the power window switch.
16. Remove the two door glass mounting bolts (1).
    (Tighten: Door glass mounting bolts to 11 N·m)

    NOTE: Properly support the door glass when removing the mounting bolts. The door glass may drop and be damaged.

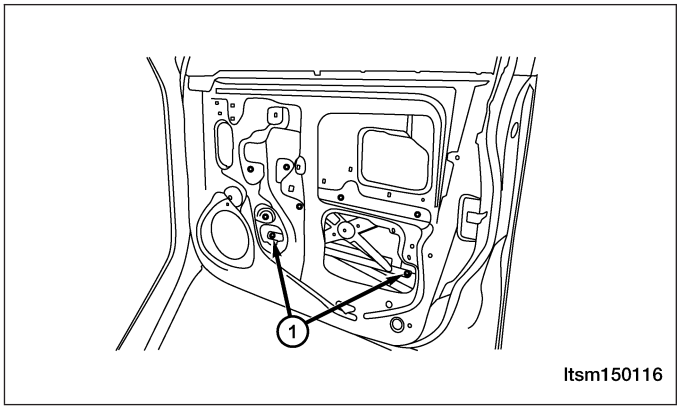

17. Remove the door glass weatherstrip (1).
18. Lift the door glass and remove the door glass from the door.

    NOTE: Take care not to damage the door glass.

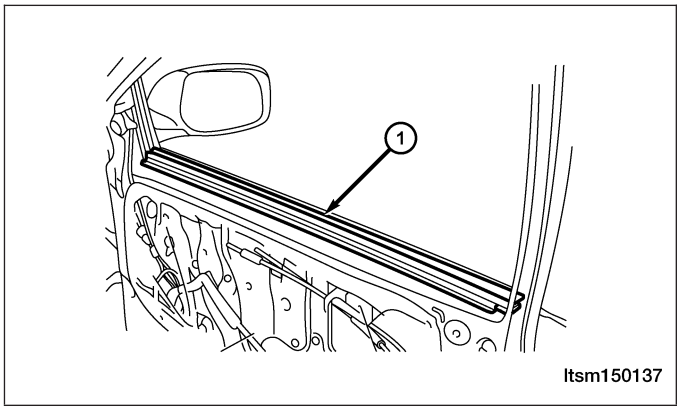

19. Disconnect the power window motor electrical connector.
20. Remove the six power window regulator mounting bolts (1).
    (Tighten: Power window regulator mounting bolts to 11 N·m)

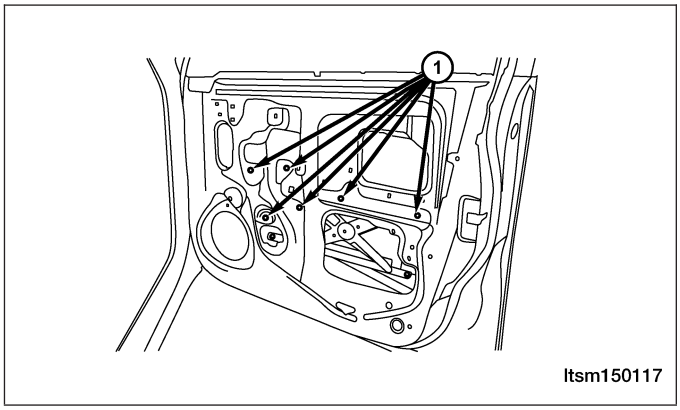

21. Carefully remove the power window regulator.
22. Remove the power window motor from the regulator.
23. Installation is in the reverse order of removal.

Downloaded from www.Manualslib.com manuals search engine

Power Window Motor Inspection

1. Using the following table, apply battery voltage to the specified connector terminals.
2. Verify that the motor operates smoothly when voltage is applied in each direction.
3. If the test results are not as specified, replace the motor.

MEASURING CONDITION	OPERATIONAL DIRECTION	INSPECTION DIAGRAM
Battery positive (+) to terminal – 1 Battery negative (-) to terminal – 2	Clockwise rotation	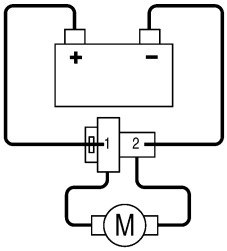 ltsm150136
Battery positive (+) to terminal – 2 Battery negative (-) to terminal – 1	Counterclockwise rotation	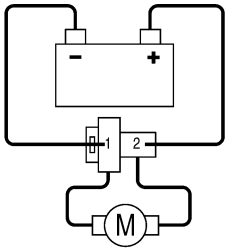 ltsm150138

Downloaded from www.Manualslib.com manuals search engine

SEATS

General Information

Description

The seat movement is controlled by an adjustment bar. The seat can be adjusted to six different seating positions. The vehicle may be equipped with heated seats. Heated seats provide comfort and warmth in cold weather. The heaters provide the same heat level for both the seat cushion and back. The driver seat and front passenger seat are heated.

Operation

The manual seat adjustment bar is at the front of the seat, near the floor. Pull the bar upward and slide the seat forward or rearward. Release the bar once the seat is in the desired position. To confirm the seat is locked into place, attempt to move the seat forward and rearward after adjusting the seat. The heated seat controls for each seat are located near the bottom center of the instrument panel. After turning the ignition ON, the seat heater can be activated to High or Low heat settings. When the switch is in the middle position, the seat heater is OFF. Each switch is equipped with LED lights to indicate the level of heat at which each seat is set.

Downloaded from www.Manualslib.com manuals search engine

Electrical Schematics

Heated Seat (Page 1 of 1)

HEATED SEAT

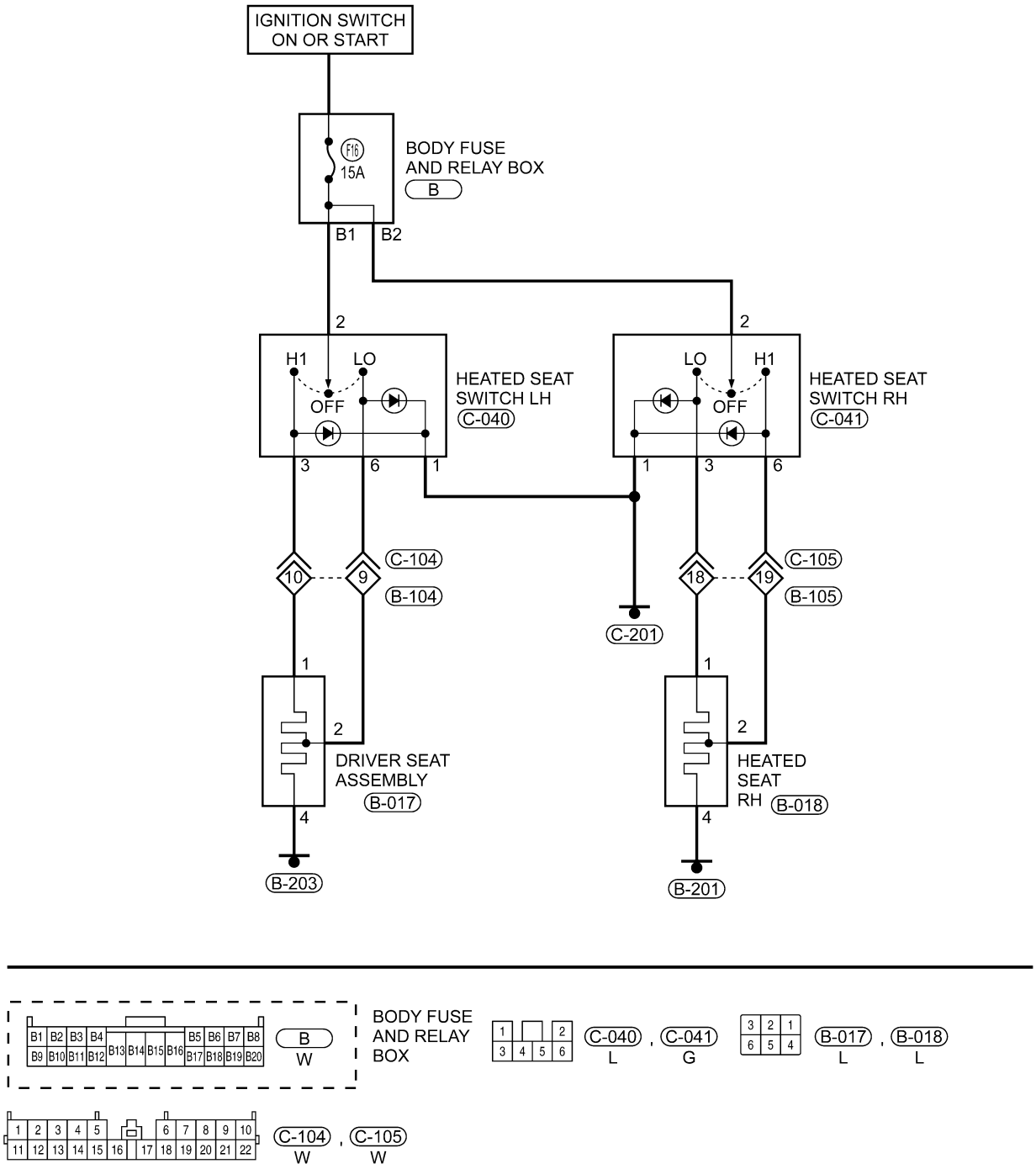

ltsmw150004t

Downloaded from www.Manualslib.com manuals search engine

Front Seat

Removal & Installation

1. Move the seat to the furthest forward position and remove the protective cover from the seat guide rail.

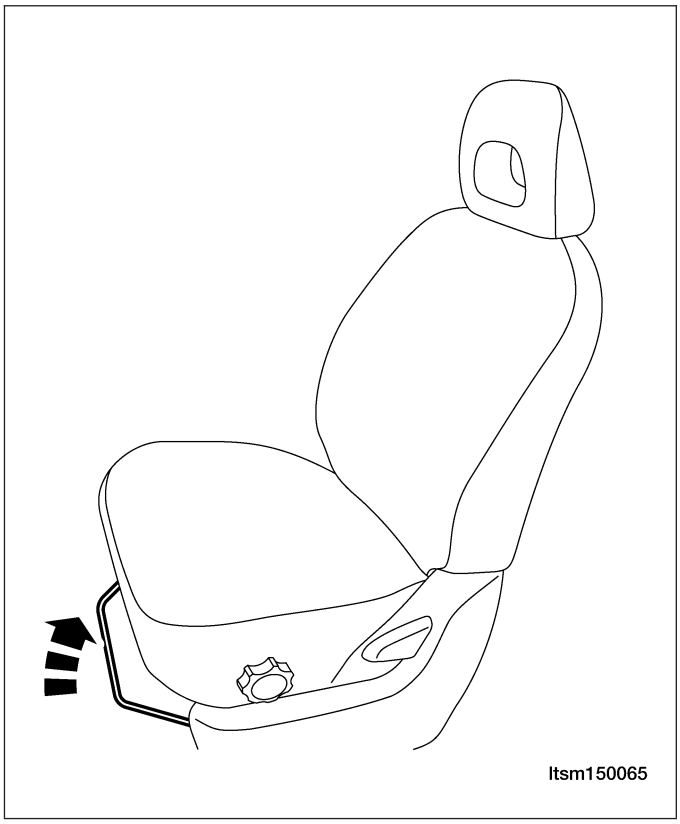

2. Remove the guide rail mounting bolts (1).
   (Tighten: Guide rail mounting bolts to 32 N·m)

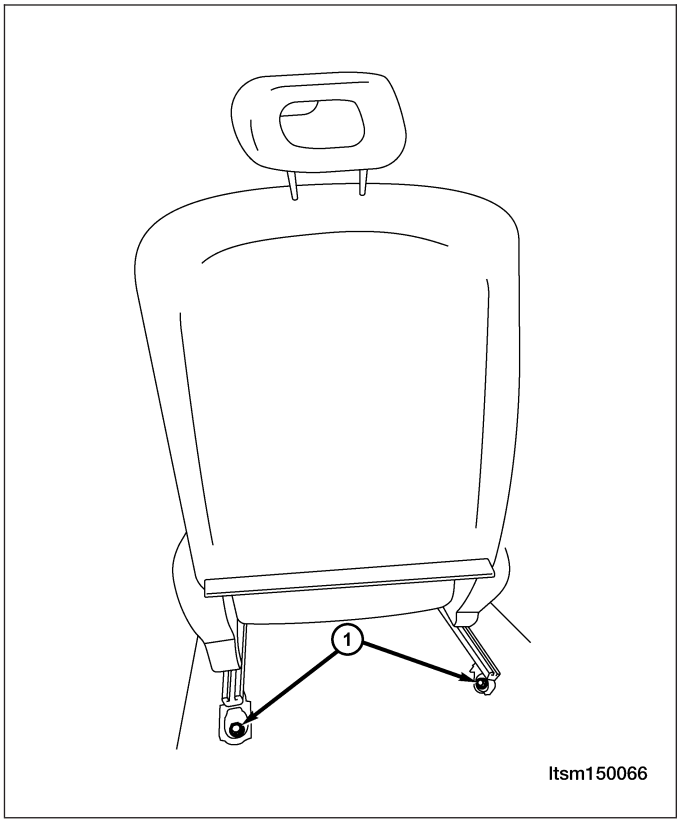

Downloaded from www.Manualslib.com manuals search engine

3. Move seat to the furthest rearward position and remove the protective cover from the guide rail.
4. Remove the guide rail mounting bolts (1).
5. Disconnect seat heating element electrical connector and remove the front seat.
6. Installation is in the reverse order of removal.

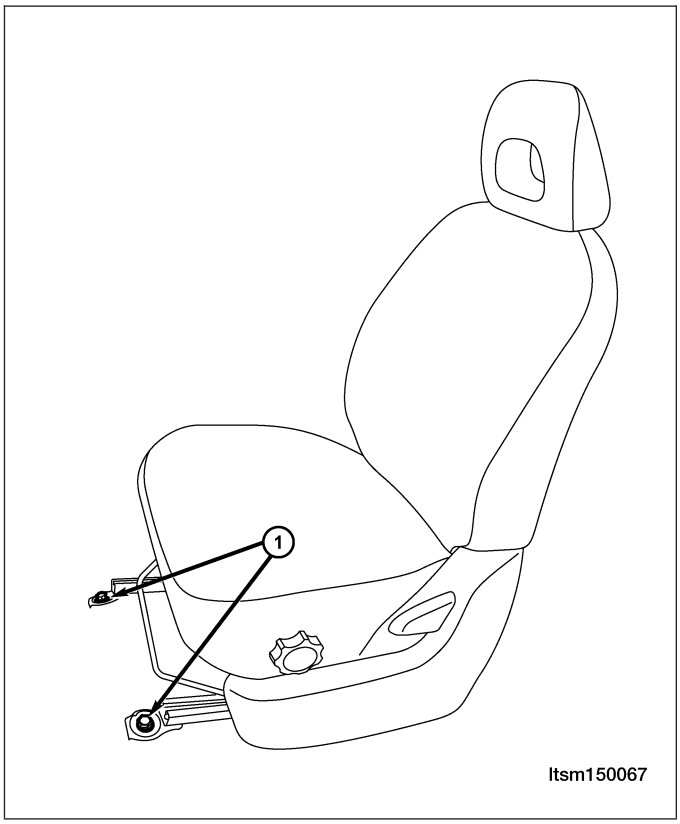

Rear Seats

Removal & Installation

1. Open the back door.
2. Pull the seat release (1) upward to fold the rear seat.

Downloaded from www.Manualslib.com manuals search engine

3. Press the seat latch rod to separate the back of the seat from the clamp rod.
4. Pull up the seat strap behind the seat and unlock the latch in front of the seat.

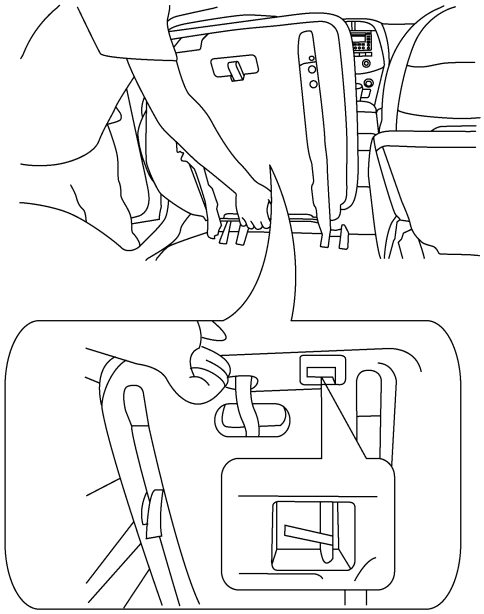

ltsm150068

5. Installation is in the reverse order of removal.

Downloaded from www.Manualslib.com manuals search engine

Heated Seat Switch

Removal & Installation

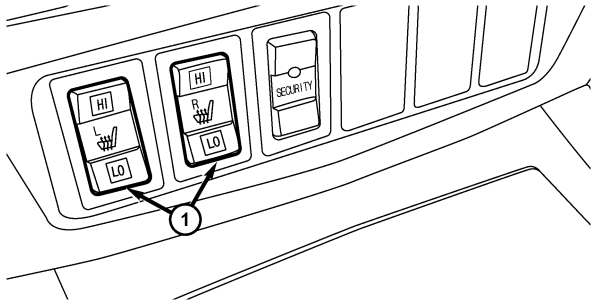

ltsm150127

1. Using a trim stick, carefully remove the switches (1) from the mounting bezel.
2. Disconnect the heated seat switch electrical connector.
3. Installation is in the reverse order of removal.

Heated Seat Element

Removal & Installation

1. Disconnect the negative battery cable.
2. Remove the appropriate seat cushion.
3. Disconnect the inoperative heated seat cushion electrical connector.
4. Remove the inoperative heating element from the seat.
5. Installation is in the reverse order of removal.

Downloaded from www.Manualslib.com manuals search engine

IMMOBILIZER CONTROL MODULE

Description

The vehicle security system uses an Immobilizer control module as an anti-theft device that prevents the engine from starting if an incorrect key is inserted into the ignition switch.

Operation

When an incorrect key is inserted into the ignition switch, the vehicle security system senses the incorrect key and sends a signal to the Immobilizer control module. The Engine Control Module (ECM) receives the signal from Immobilizer control module via the R-Line. The ECM then disables the engine from starting.

Downloaded from www.Manualslib.com manuals search engine

Electrical Schematics

Immobilizer Control Module (Page 1 of 1)

IMMOBILIZER - WITH ACTECO ENGINE SYSTEM

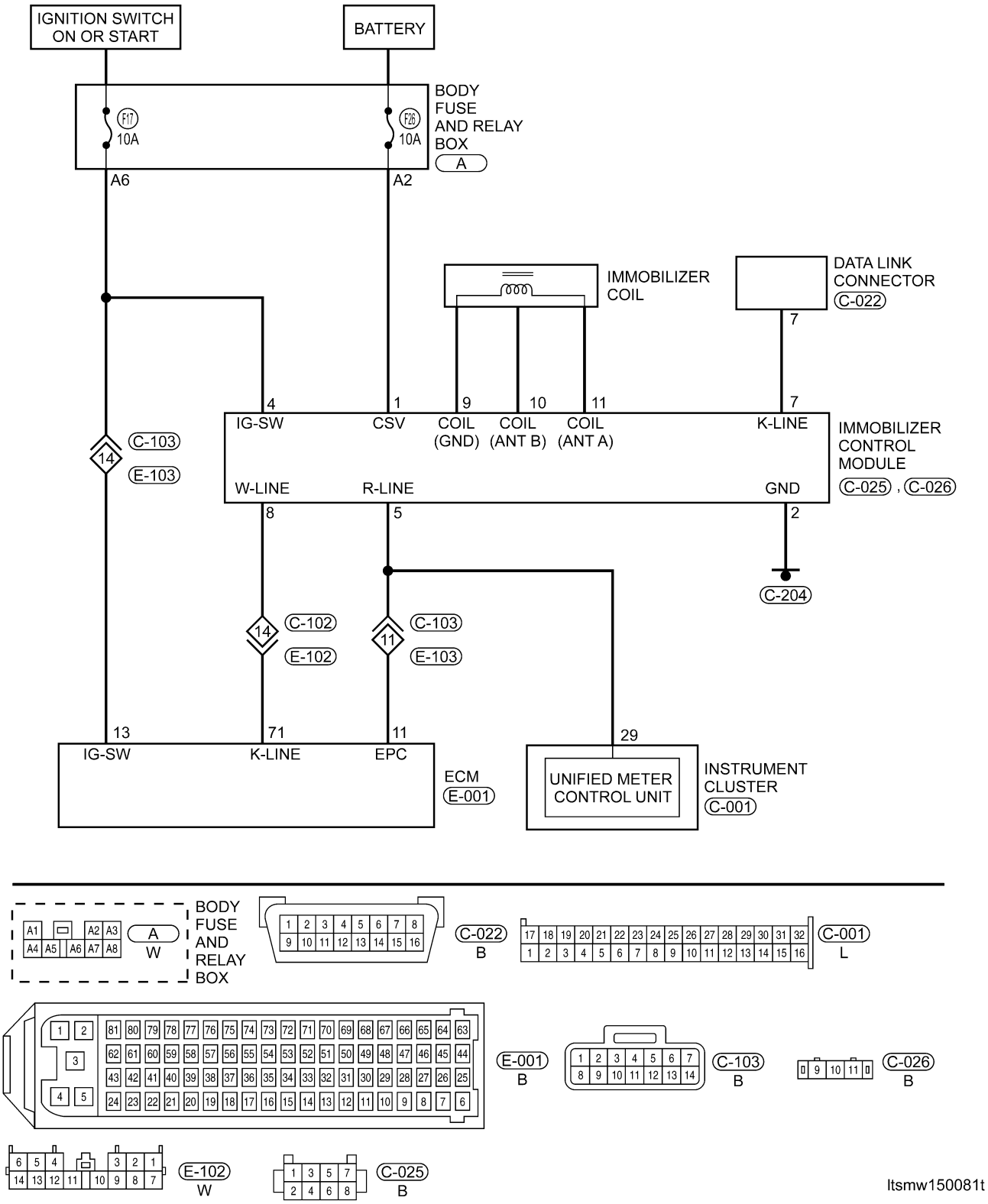

15

Downloaded from www.Manualslib.com manuals search engine

Immobilizer Control Module Connector Pin-Out Table

PIN	CIRCUIT IDENTIFICATION	PIN	CIRCUIT IDENTIFICATION
1	Continuous Supply Voltage	7	Diagnostic Link K
2	GND	8	W-Line
3	-	9	Coil (GND)
4	Ignition Switch	10	Coil (ANT B)
5	R-Line	11	Coil (ANT A)
6	-	—	-

Downloaded from www.Manualslib.com manuals search engine

DIAGNOSIS & TESTING

Diagnostic Help

1. The X-431 scan tool connects to the Data Link Connector (DLC) and communicates with the vehicle electronic modules through the class two serial data circuit.
2. Confirm that the malfunction is current and carry-out the diagnostic tests and repair procedures.
3. If the DTC cannot be deleted, it is a current fault.
4. Use a digital multimeter to perform voltage readings on electronic systems.
5. Refer to any Technical Bulletins that issued.
6. Visually inspect the related electrical wiring harness.
7. Inspect and clean all Immobilizer control module grounds that are related to the DTC.
8. If numerous trouble codes were set, use the electrical schematic and look for any common ground circuits or voltage supply circuits that may apply to the DTC.

Intermittent DTC Troubleshooting

If the failure is intermittent, perform the following:

- Check for loose connectors.
- Look for any chafed, pierced, pinched, or partially broken wires.
- Monitor the scan tool data relative to this circuit.
- Wiggle the related electrical wiring harness and connectors while looking for an interrupted signal on the affected circuit.
- If possible, try to duplicate the conditions under which the DTC set.
- Look for the data to change or for the DTC to reset during the wiggle test.
- Look for broken, bent, pushed out or corroded terminals.
- Inspect the sensor and mounting area for any condition that would result in an incorrect signal, such as damage or foreign material.
- A data recorder, and/or oscilloscope should be used to help diagnose intermittent conditions.

Ground Inspection

Ground connections are very important to the proper operation of electrical and electronic circuits. Ground connections are often exposed to moisture, dirt and other corrosive elements. The corrosion (rust) can become an unwanted resistance. This added resistance can alter the way a circuit works.

Electronically controlled circuits are very sensitive to proper grounding. A loose or corroded ground can drastically affect an electronically controlled circuit. A poor or corroded ground can effect the circuit. Perform the following when inspecting a ground connection:

1. Remove the ground bolt or screw.
2. Inspect all mating surface for tarnish, dirt, rust, etc.
3. Clean as required to assure good contact.
4. Reinstall bolt or screw securely.
5. Inspect for ″add-on″ accessories which may be interfering with the ground circuit.
6. If several wires are crimped into one ground eyelet terminal, check for proper crimps. Make sure all of the wires are clean, securely fastened and providing a good ground path. If multiple wires are crimped to one eyelet, make sure no excess wire insulation has been crimped creating a bad ground.

Diagnostic Tools

- Diagnostic Scan Tool X-431
- Digital Multimeter
- Jumper Wire

Downloaded from www.Manualslib.com manuals search engine

Diagnostic Trouble Code (DTC) List

Immobilizer Control Module DTC List

DTC	DTC DEFINITION
B1000	ECU Defect, Internal Errors
B3040	Communication Error On W-Line, ECM Doesn't Answer On Challenge Or Response Requests
B3042	W-Line Short Circuit To Ground
B3043	W-Line Short Circuit To Battery
B3045	DWA Line Short Circuit To Ground Or Open Circuit, DWA Line Malfunction
B3048	DWA Line Short Circuit To Battery
B3050	Relay Extern Line Short Circuit To Ground Or Open Circuit, Relay Extern Line Malfunction
B3053	Relay Extern Line Short Circuit To Battery
B3055	No Transponder Modulation Or No Transponder
B3056	No Transponder Fix Code Programmed
B3057	No Security Code Programmed
B3060	Unprogrammed Transponder Fix Code Received
B3061	Disturbed Or No Challenge / Response Transponder Communication
B3077	Read-Only Transponder Detected

Downloaded from www.Manualslib.com manuals search engine

Remote Keyless Entry (RKE) Inoperative

No Response From Remote Keyless Entry (RKE) Transmitter

1. CHECK BATTERY

- Check battery of the RKE transmitter.

Is the battery voltage of the RKE transmitter normal?

Yes >> Go to the next step.

No >> This concern has been caused by the transmitter battery. Go to step 4.

2. CHECK THE IGNITION LOCK CYLINDER CONDITION

- Check the ignition lock cylinder for proper operation.

Is the check result normal?

Yes >> Go to the next step.

No >> Repair or replace the ignition lock cylinder key switch.

3. PERFORM THE RKE TRANSMITTER MATCH PROCEDURE

- Close all the doors.
- Insert the ignition key into the ignition switch which has lost synchronization in LOCK position.
- Press any button on the RKE transmitter within 5 seconds.
- Pull the ignition key out of the ignition switch.
- Try to operate the RKE transmitter.

Does the RKE transmitter operate properly?

Yes >> Erase all codes before returning the vehicle to the customer.

No >> Go to the next step.

Downloaded from www.Manualslib.com manuals search engine

4. PERFORM THE RKE TRANSMITTER MATCH WITH THE X-431

- Replace the RKE transmitter.
- Connect the X-431 scan tool to the Data Link Connector (DLC), press the POWER key to start the X-431 (use the most current software available).
- Turn ignition switch on.
  - Enter the Diagnostic Program.
  - Select Chery main program.
  - Select diagnostic version.
  - Enter download program.
  - Select T11 series, and then select ISU.
  - Select ″Remoter Match″.

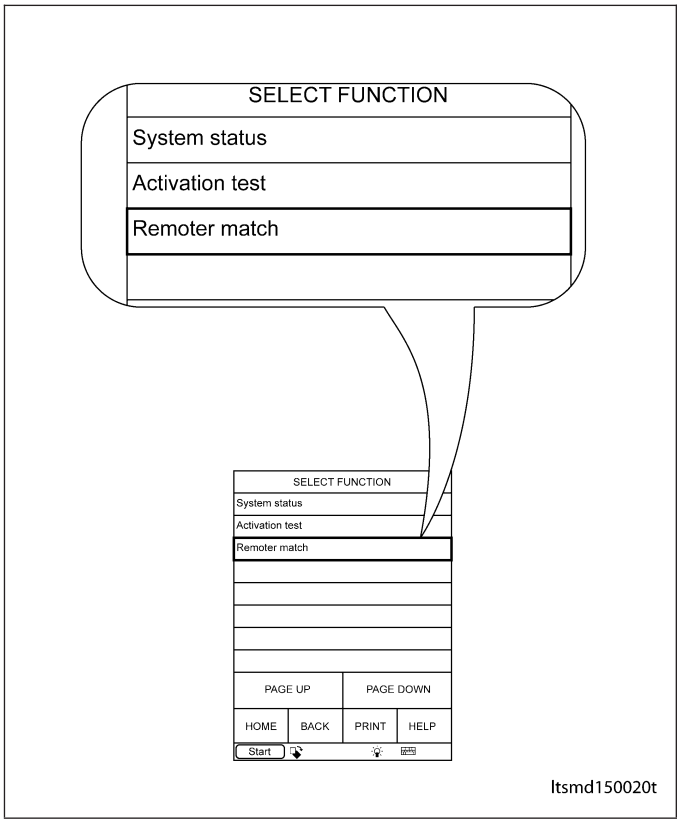

- Press the lock button on the RKE transmitter for less than 2 seconds.
- Pull out the ignition switch.
- Try to operate the RKE transmitter.

Does the RKE transmitter operate properly?

Yes >> Erase all codes before returning the vehicle to the customer.
The concern was caused by the RKE transmitter.

No >> Replace the FBCM (See FBCM Removal & Installation in Section 15 Body & Accessories).
Refer to the RKE transmitter match procedure with X-431 as the description.
Perform match between the RKE transmitter and FBCM with X-431.

Downloaded from www.Manualslib.com manuals search engine

Diagnostic Trouble Code (DTC) Tests

B1000 - ECU Defect: Internal Errors

IMMOBILIZER - WITH ACTECO ENGINE SYSTEM

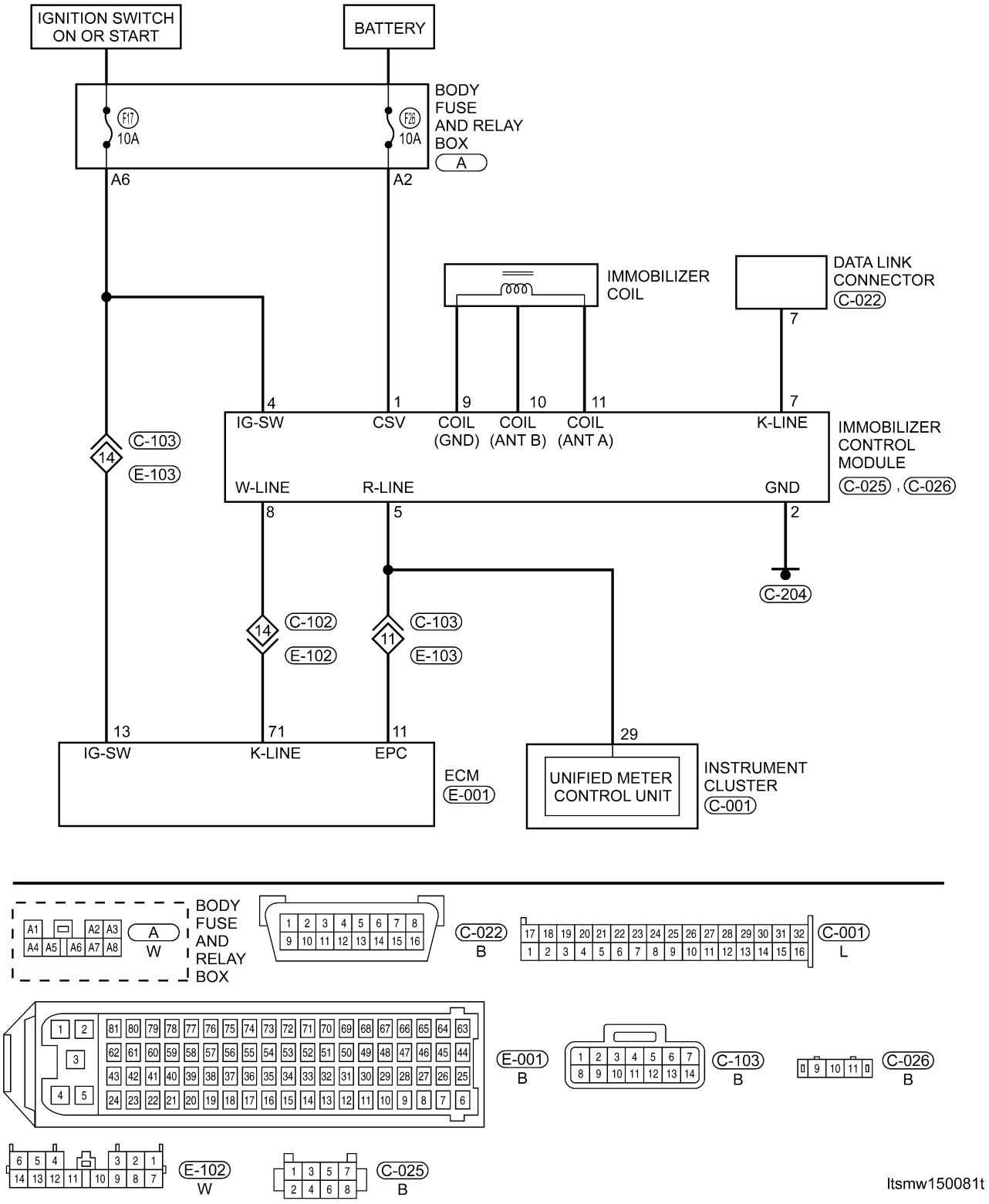

15

Downloaded from www.Manualslib.com manuals search engine

On Board Diagnostic Logic

- Self-diagnosis detection logic.

DTC NO.	DTC DEFINITION	DTC DETECTION CONDITION	POSSIBLE CAUSE
B1000	ECU Defect, Internal Errors	Immobilizer control module detects an internal failure.	• Immobilizer control module

DTC Confirmation Procedure:

Before performing the following procedure, confirm that battery voltage is more than 12 V.
- Turn ignition switch off.
- Connect the X-431 scan tool to the Data Link Connector (DLC) - use the most current software available.
- Turn ignition switch on, with the scan tool, view and erase stored DTCs in the Immobilizer control module.
- Try to start the engine.
- Turn ignition switch off, and wait a few seconds, then turn ignition switch on.
- With the scan tool, view DTCs in the Immobilizer control module.
- If the DTC is detected, the condition is current. Go to Diagnostic Procedure - Step 1.
- If the DTC is not detected, the DTC condition is intermittent (See Diagnostic Help and Intermittent DTC Troubleshooting in Section 15 Body & Accessories for more information).

NOTE :
While performing electrical diagnosis & testing, always refer to the electrical schematics for specific circuit and component information.

Diagnostic Procedure

1. CHECK DTC

- Perform DTC confirmation procedure.

Is DTC B1000 present?

Yes >> Go to the next step.

No >> The condition that caused the DTC to set is currently not present (See Diagnosis & Testing Diagnostic Help in Section 15 Body & Accessories).

2. CHECK IMMOBILIZER CONTROL MODULE ELECTRICAL CONNECTOR

- Turn ignition switch off.
- Disconnect the Immobilizer control module electrical connector C-025 (1).
- Inspect the electrical connector for damage.

Is the electrical connector OK?

Yes >> Go to the next step.

No >> Repair or replace the electrical connector as necessary.

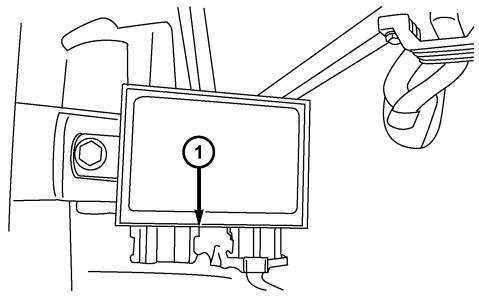

ltsmd150019

Downloaded from www.Manualslib.com manuals search engine

3. CHECK IMMOBILIZER CONTROL MODULE POWER SUPPLY

- Turn ignition switch on.
- Check if voltage is present on the Immobilizer control module connector C-025, pin 4,1 and ground.

IMMOBILIZER CONTROL MODULE TERMINAL	GROUND
1	Ground
4	

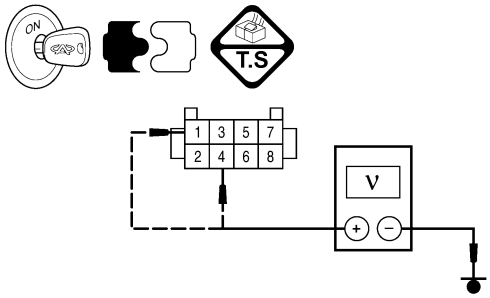

ltsmd150012

Is 12 V present?

Yes >> Replace and program the Immobilizer control module. Refer to DTC B3077 Diagnostic Procedure.

No >> For DTC B3050, go to the next step.
For DTC B3053, go to the step 6.

4. CHECK IMMOBILIZER CONTROL MODULE ELECTRICAL CONNECTOR

- Turn ignition switch off.
- Disconnect the Immobilizer control module electrical connector C-026 (1).
- Inspect the electrical connector for damage.

Is the electrical connector OK?

Yes >> Go to the next step.

No >> Repair or replace the electrical connector as necessary.

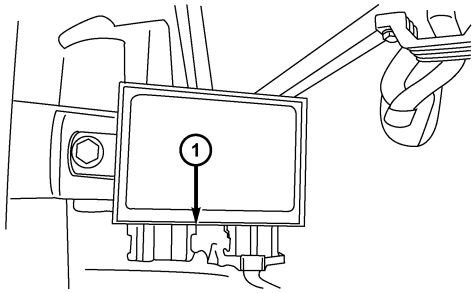

ltsmd150019

Downloaded from www.Manualslib.com manuals search engine

5. CHECK IMMOBILIZER COIL

- Check the resistance between the Immobilizer coil connector C-026, pin 9 and pin 11.

IMMOBILIZER COIL TERMINAL	IMMOBILIZER COIL TERMINAL	RESISTANCE
9	11	5 - 20 ohms

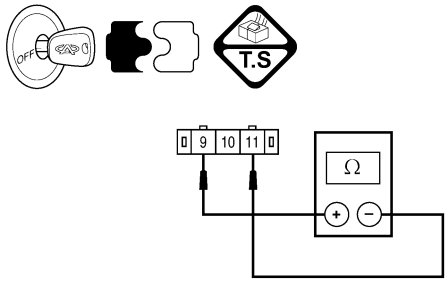

ltsmd150015

- The resistance should be 5 to 20 ohms.
- Check the resistance between the Immobilizer coil connector C-026, pin 9 and pin 10.
- Check the resistance between the Immobilizer coil connector C-026, pin 11 and pin 10.

IMMOBILIZER COIL TERMINAL	IMMOBILIZER COIL TERMINAL	CONTINUITY
9	10	Not
11	10	

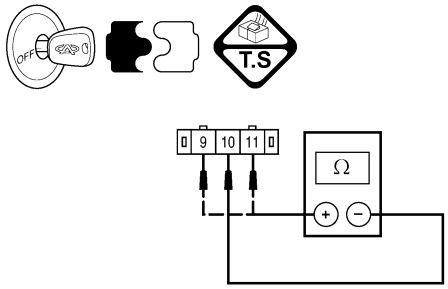

ltsmd150016

Is the check result normal?

Yes >> Go to the next step.

No >> Replace the Immobilizer coil.

6. CHECK DTC

- With the X-431 scan tool, read the Immobilizer control module DTCs.
- Refer to "DTC Confirmation Procedure".

Is DTC B1000 still present?

Yes >> Replace and program the Immobilizer control module.
Refer to DTC B3077 Diagnostic Procedure.

No >> The system is now operating properly.
Reassemble the vehicle and verify the customers complaint is repaired.

Downloaded from www.Manualslib.com manuals search engine

B3042 - W-Line Short Circuit To Ground
B3043 - W-Line Short Circuit To Battery

Immobilizer Control Module

IMMOBILIZER - WITH ACTECO ENGINE SYSTEM

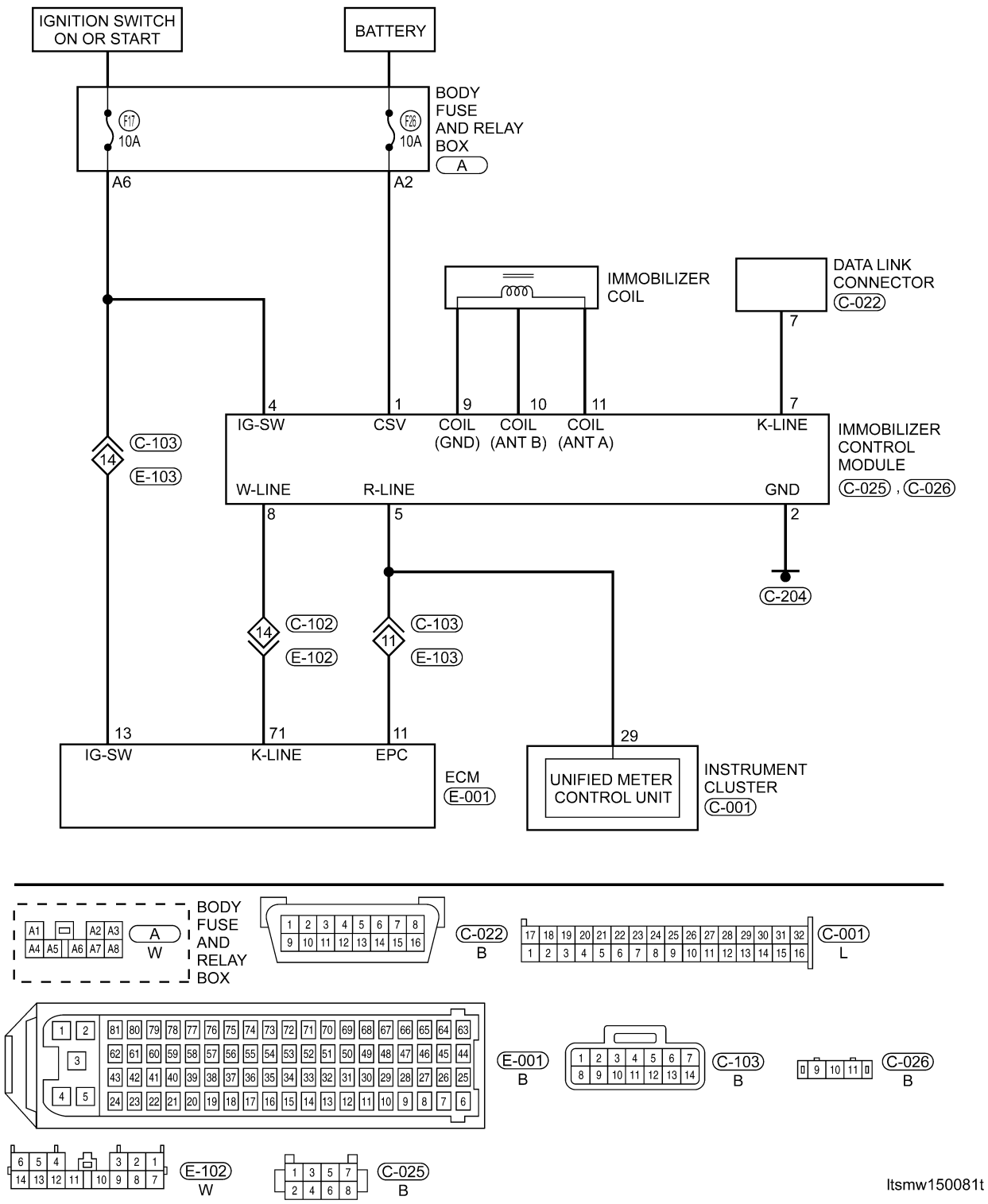

Downloaded from www.Manualslib.com manuals search engine

On Board Diagnostic Logic

- Self-diagnosis detection logic.

DTC NO.	DTC DEFINITION	DTC DETECTION CONDITION	DTC SET CONDITION	POSSIBLE CAUSE
B3042	W-line short circuit to ground	Ignition switch: ON	The Immobilizer control module detects a short ground condition on the W-Line for at least 3 seconds.	• Harness or connectors • Immobilizer control module • ECM
B3043	W-Line short circuit to battery		The Immobilizer control module detects a short battery condition on the W-Line for at least 3 seconds.	• Harness or connectors • Immobilizer control module • ECM

DTC Confirmation Procedure:

Before performing the following procedure, confirm that battery voltage is more than 12 V.

- Turn ignition switch off.
- Connect the X-431 scan tool to the Data Link Connector (DLC) - use the most current software available.
- Turn ignition switch on, with the scan tool, view and erase stored DTCs in the Immobilizer control module.
- Try to start the engine.
- Turn ignition switch off, and wait a few seconds, then turn the ignition switch on.
- With the scan tool, view active DTCs in the Immobilizer control module.
- If the DTC is detected, the condition is current. Go to Diagnostic Procedure - Step 1.
- If the DTC is not detected, the DTC condition is intermittent (See Diagnostic Help and Intermittent DTC Troubleshooting in Section 15 Body & Accessories for more information).

NOTE :
While performing electrical diagnosis & testing, always refer to the electrical schematics for specific circuit and component information.

Diagnostic Procedure

1. CHECK GROUND CONNECTION

- Turn ignition switch off.
- Loosen and retighten ground screws on the body (See Ground Inspection in Section 15 Body & Accessories).
- Inspect ground connection C-204 mounting position (See Vehicle Wiring Harness Layout - Main Harness in Section 16 Wiring).

Is the ground connection OK?

Yes >> Go to the next step.

No >> Repair or replace ground connection.

2. CHECK IMMOBILIZER CONTROL MODULE DTC

- With the scan tool, view DTCs in the Immobilizer control module. Refer to DTC confirmation procedure.

Is the warning light flashing and DTC B3042 or B3043 present?

Yes >> Go to the next step.

No >> The conditions that caused this code to set are not present at this time (See Diagnostic Help in Section 15 Body & Accessories).

Downloaded from www.Manualslib.com manuals search engine

3. CHECK ENGINE CONTROL MODULE (ECM) ELECTRICAL CONNECTOR

- Turn ignition switch off.
- Disconnect the Engine Control Module (ECM) electrical connector E-001 (1).
- Inspect the electrical connector for damage.

Is the electrical connector OK?

Yes >> Go to the next step.

No >> Repair or replace the electrical connector as necessary.

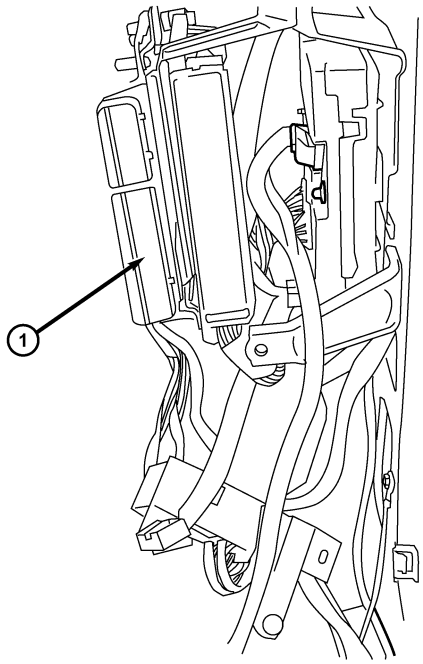

ltsmd030077

4. CHECK IMMOBILIZER CONTROL MODULE ELECTRICAL CONNECTOR

- Disconnect the Immobilizer control module electrical connectors C-025 and C-026 (1).
- Inspect the electrical connector for damage.

Is the electrical connector OK?

Yes >> Go to the next step.

No >> Repair or replace the electrical connector as necessary.

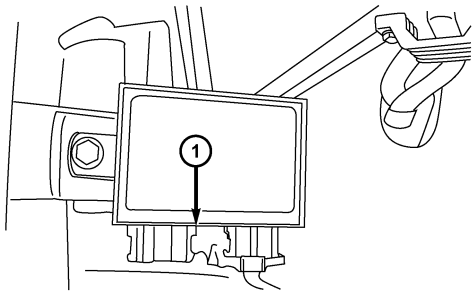

ltsmd150019

Downloaded from www.Manualslib.com manuals search engine

5. CHECK IMMOBILIZER CONTROL MODULE AND ECM COMMUNICATION CIRCUIT

- For DTC B3042, check the resistance of W-Line between the Immobilizer control module connector C-025, pin 8 and ground.

IMMOBILIZER CONTROL MODULE TERMINAL	TERMINAL	RESULT
8	Ground	Continuity should not exist

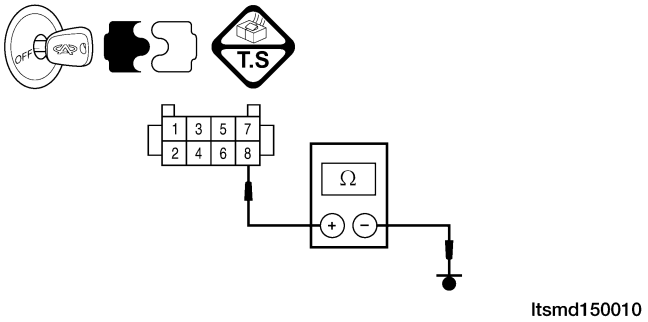

- For DTC B3043, turn ignition switch on, check voltage between the Immobilizer control module connector C-025, pin 8 and ground.

IMMOBILIZER CONTROL MODULE TERMINAL	TERMINAL	RESULT
8	Ground	12 V should not exist

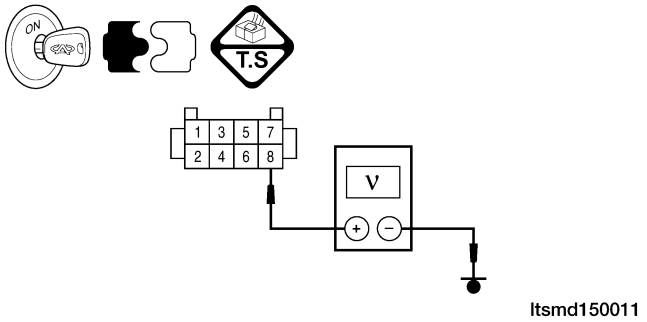

Is the check result normal?

Yes >> Go to the next step.

No >> Repair the circuits fault as necessary.

6. REPLACE AND PROGRAM THE IMMOBILIZER CONTROL MODULE

- Replace and program the Immobilizer control module with the X-431.
- Reconnect all disconnected electrical harness connectors.
- With the X-431 scan tool, view the DTCs in the Immobilizer control module.

Is DTC B3042 or B3043 present again?

Yes >> Go to the next step.

No >> The system is now operating properly.
The DTC was caused by Immobilizer control module.

Downloaded from www.Manualslib.com manuals search engine

7. REPLACE AND PROGRAM THE ECM

- With the X-431 scan tool, view active DTCs in the ECM.
- Refer to ″DTC Confirmation Procedure″.

Is DTC B3042 or B3043 still present?

Yes >> Replace and program ECM.

No >> The system is now operating properly.
Reassemble the vehicle and verify the customers complaint is repaired.

Downloaded from www.Manualslib.com manuals search engine

B3050 - Relay External Line Short Circuit To Ground Or Open Circuit, Relay External Line Malfunction
B3053 - Relay External Line Short Circuit To Battery

IMMOBILIZER - WITH ACTECO ENGINE SYSTEM

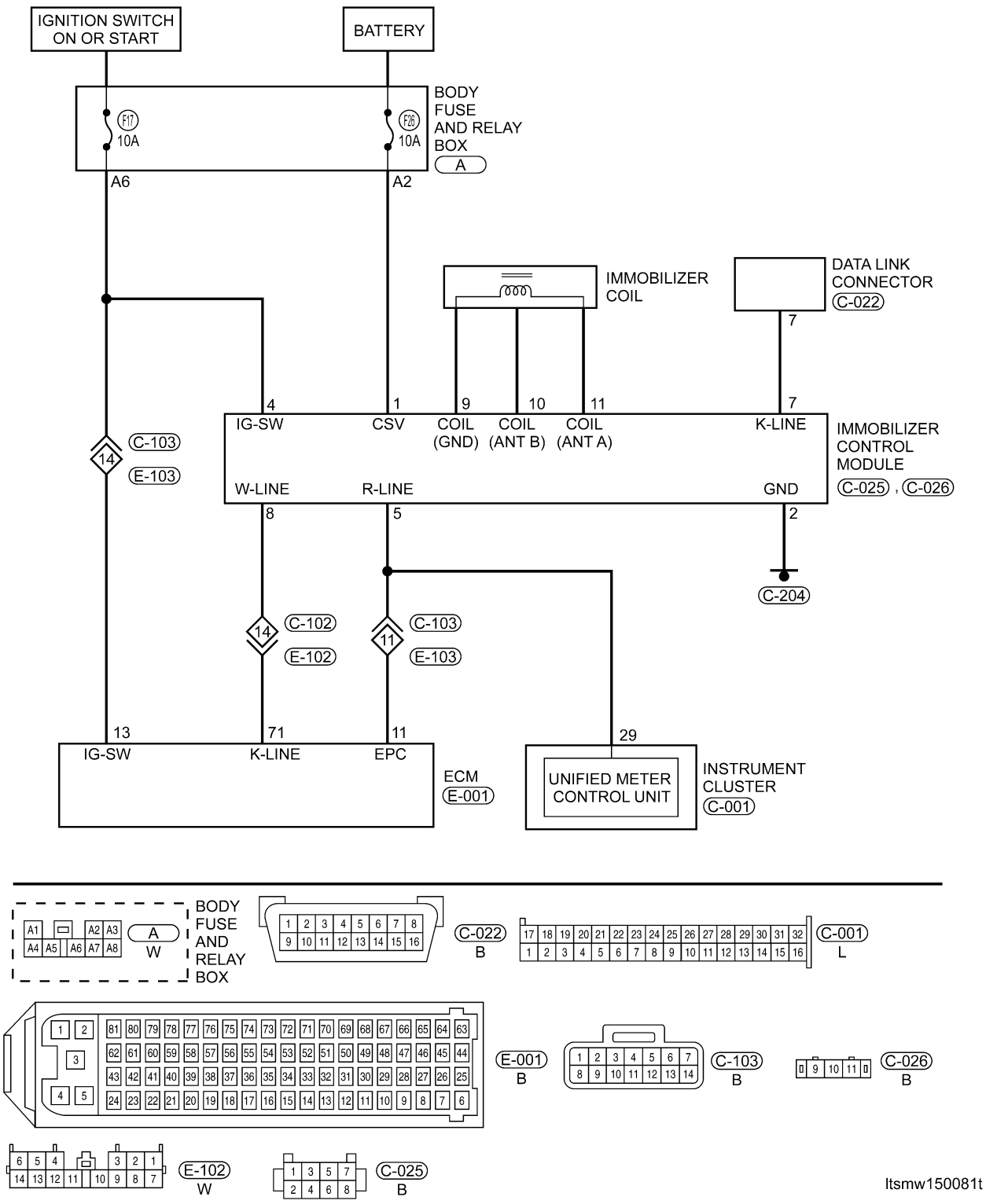

Downloaded from www.Manualslib.com manuals search engine

On Board Diagnostic Logic

- Self-diagnosis detection logic.

DTC NO.	DTC DEFINITION	DTC DETECTION CONDITION	DTC SET CONDITION	POSSIBLE CAUSE
B3050	Relay external line short circuit to ground or open circuit, relay external line malfunction	Ignition switch: ON	The Immobilizer control module detects a short to ground condition on the W-Line for at least 3 seconds.	• Harness or connectors • Immobilizer control module
B3053	Relay external line short circuit to battery	Ignition switch: ON	The Immobilizer control module detects a short to battery condition on the relay external line.	• Harness or connectors • Immobilizer control module

DTC Confirmation Procedure:

Before performing the following procedure, confirm that battery voltage is more than 12 V.

- Turn ignition switch off.
- Connect the X-431 scan tool to the Data Link Connector (DLC) - use the most current software available.
- Turn ignition switch on, with the scan tool, view and erase stored DTCs in the Immobilizer control module.
- Try to start the engine.
- Turn ignition switch off, and wait a few seconds, then turn ignition switch on.
- With the scan tool, view active DTCs in the Immobilizer control module.
- If the DTC is detected, the condition is current. Go to Diagnostic Procedure - Step 1.
- If the DTC is not detected, the DTC condition is intermittent (See Diagnostic Help and Intermittent DTC Troubleshooting in Section 15 Body & Accessories for more information).

NOTE :
While performing electrical diagnosis & testing, always refer to the electrical schematics for specific circuit and component information.

Downloaded from www.Manualslib.com manuals search engine

Diagnostic Procedure

1. CHECK GROUND CONNECTION

- Turn ignition switch off.
- Loosen and retighten ground screws on the body (See Ground Inspection in Section 15 Body & Accessories).
- Inspect ground connection C-204 mounting position (See Vehicle Wiring Harness Layout - Main Harness in Section 16 Wiring).

Is the ground connection OK?

Yes >> Go to the next step.

No >> Repair or replace ground connection.

2. CHECK IMMOBILIZER CONTROL MODULE DTC

- With the scan tool, view DTCs in the Immobilizer control module. Refer to DTC confirmation procedure.

Is DTC B3050 or B3053 present?

Yes >> Go to the next step.

No >> The condition that caused the DTC to set is currently not present (See Diagnosis & Testing Diagnostic Help in Section 15 Body & Accessories).

3. CHECK IMMOBILIZER CONTROL MODULE ELECTRICAL CONNECTOR

- Turn ignition switch off.
- Disconnect the Immobilizer control module electrical connectors C-025 (1).
- Inspect the electrical connector for damage.

Is the electrical connector OK?

Yes >> Go to the next step.

No >> Repair or replace the electrical connector as necessary.

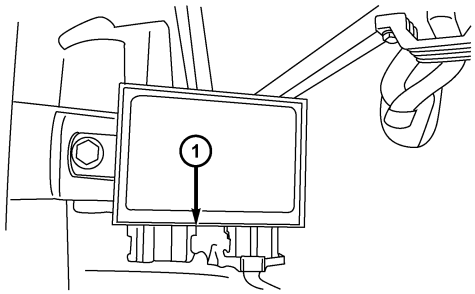

ltsmd150019

Downloaded from www.Manualslib.com manuals search engine

4. CHECK IMMOBILIZER CONTROL MODULE POWER SUPPLY

- Turn ignition switch on.
- Check if voltage is present on the Immobilizer control module connector C-025, pin 4,1 and ground.

IMMOBILIZER CONTROL MODULE TERMINAL	GROUND
1	Ground
4	

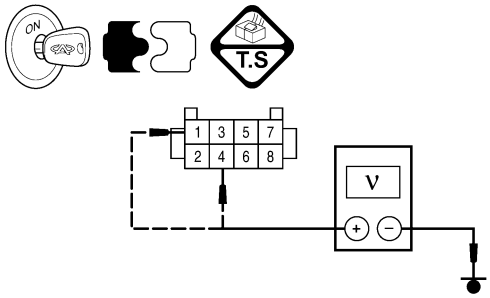

ltsmd150012

Is 12 V present?

Yes >> Replace and program the Immobilizer control module. Refer to DTC B3077 Diagnostic Procedure.

No >> For DTC B3050, go to the next step.
For DTC B3053, go to the step 6.

5. CHECK IMMOBILIZER CONTROL MODULE POWER SUPPLY CIRCUIT

- Turn ignition switch off.
- Disconnect the negative battery cable.
- Disconnect the body fuse and relay box electrical connector A.
- Check harness continuity between the following terminals:
- Continuity should exist.

BODY FUSE AND RELAY BOX TERMINAL	IMMOBILIZER CONTROL MODULE TERMINAL	CONTINUITY
A2	1	Yes

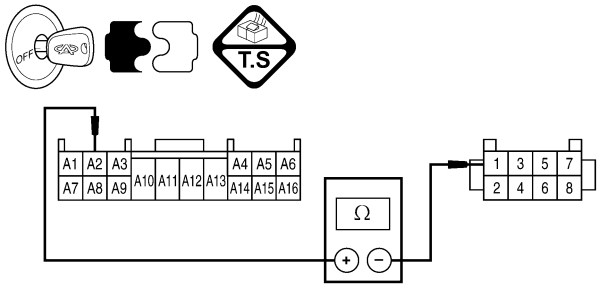

ltsmd150013

Downloaded from www.Manualslib.com manuals search engine

- Check for harness continuity between the following terminals:
- Continuity should exist.

BODY FUSE AND RELAY BOX TERMINAL	IMMOBILIZER CONTROL MODULE TERMINAL	CONTINUITY
A6	4	Yes

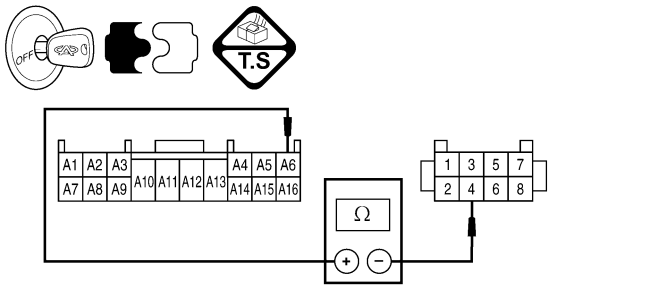

ltsmd150014

- Check harness for a short to ground.
- Continuity between Immobilizer control module power supply and ground should not exist.

Is the check result normal?

Yes >> Go to the step 7.

No >> Repair or replace the open or high resistance circuit or short to ground in harness or connectors.

6. CHECK IMMOBILIZER CONTROL MODULE POWER SUPPLY CIRCUIT

- Turn ignition switch off.
- Disconnect the negative battery cable.
- Disconnect the body fuse and relay box electrical connector A.
- Check the resistance between Immobilizer control module ignition switch circuit terminal 4 and Immobilizer control module battery supply circuit terminal 1.

IMMOBILIZER CONTROL MODULE TERMINAL	IMMOBILIZER CONTROL MODULE TERMINAL	CONTINUITY
1	4	No

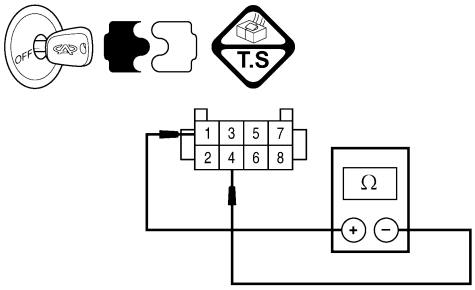

ltsmd150018

- Check resistance between Immobilizer control module ignition switch circuit and other power circuits.

Is the check result normal?

Yes >> Go to the step 8.

No >> Repair or replace short to power circuits in harness or connectors.

Downloaded from www.Manualslib.com manuals search engine

7. DETECT MALFUNCTIONING PART

- Check the following:
  - Body fuse and relay box
  - Fuse F17 (10A), fuse F26 (10A)
  - Harness between battery and body fuse and relay box

Is the check result normal?

Yes >> Go to the next step.

No >> Repair or replace damaged components.

8. REPLACE AND PROGRAM THE IMMOBILIZER CONTROL MODULE

- With the X-431 scan tool, view active DTCs in the Immobilizer control module.
- Refer to ″DTC Confirmation Procedure″.

Is DTC B3050 or B3053 still present?

Yes >> Replace and program Immobilizer control module.

No >> The system is now operating properly.
Reassemble the vehicle and verify the customers complaint is repaired.

Downloaded from www.Manualslib.com manuals search engine

B3055 - No Transponder Modulation Or No Transponder
B3056 - No Transponder Fixed Code Programmed

IMMOBILIZER - WITH ACTECO ENGINE SYSTEM

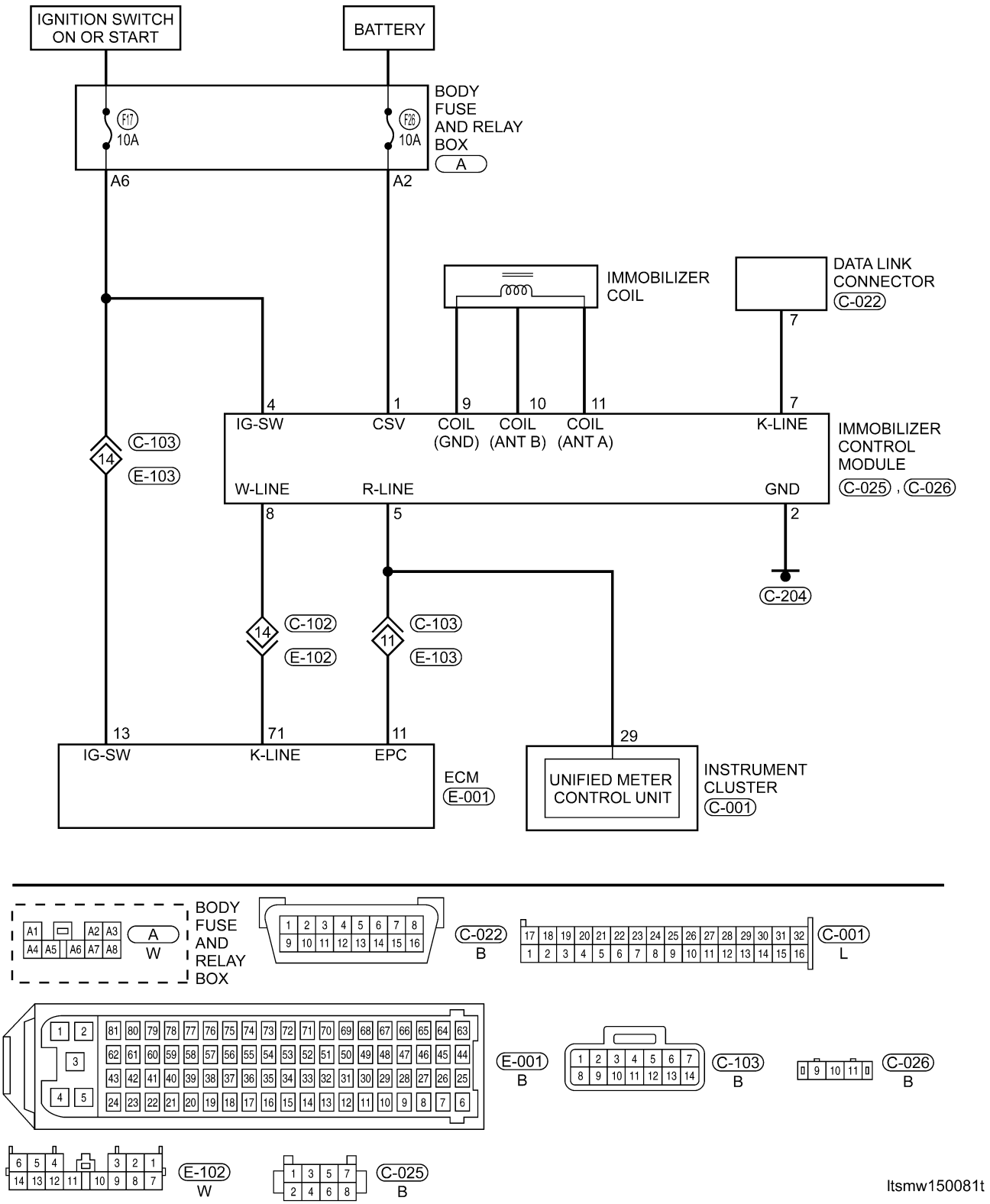

Downloaded from www.Manualslib.com manuals search engine

On Board Diagnostic Logic

- Self-diagnosis detection logic.

DTC NO.	DTC DEFINITION	DTC DETECTION CONDITION	DTC SET CONDITION	POSSIBLE CAUSE
B3055	No transponder modulation or no transponder	Ignition switch: ON	The Immobilizer control module detects no transponder or no transponder modulation condition.	• Transponder • Harness or connectors • Immobilizer control module
B3056	No transponder fixed code programmed	Ignition switch: ON	The Immobilizer control module detects that the transponder is not programmed.	• Transponder • Harness or connectors • Immobilizer control module

DTC Confirmation Procedure:

Before performing the following procedure, confirm that battery voltage is more than 12 V.
- Turn ignition switch off.
- Connect the X-431 scan tool to the Data Link Connector (DLC) - use the most current software available.
- Turn the ignition switch on, with the scan tool, view and erase stored DTCs in the Immobilizer control module.
- Try to start the engine.
- Turn ignition switch off, and wait a few seconds, then turn the ignition switch on.
- With the scan tool, view active DTCs in the Immobilizer control module.
- If the DTC is detected, the condition is current. Go to Diagnostic Procedure - Step 1.
- If the DTC is not detected, the DTC condition is intermittent (See Diagnostic Help and Intermittent DTC Troubleshooting in Section 15 Body & Accessories for more information).

NOTE :
While performing electrical diagnosis & testing, always refer to the electrical schematics for specific circuit and component information.

Diagnostic Procedure

1. CHECK GROUND CONNECTION

- Turn ignition switch off.
- Loosen and retighten ground screws on the body (See Ground Inspection in Section 15 Body & Accessories).
- Inspect ground connection C-204 mounting position (See Vehicle Wiring Harness Layout - Main Harness in Section 16 Wiring).

Is the ground connection OK?

Yes >> Go to the next step.

No >> Repair or replace ground connection.

2. CHECK IMMOBILIZER CONTROL MODULE DTC

- With the scan tool, view DTCs in the Immobilizer control module. Refer to DTC confirmation procedure.

Is DTC B3055 present?

Yes >> Go to the next step.

No >> The condition that caused the DTC to set is currently not present (See Diagnosis & Testing Diagnostic Help in Section 15 Body & Accessories).

Downloaded from www.Manualslib.com manuals search engine

3. CHECK IMMOBILIZER CONTROL MODULE ELECTRICAL CONNECTOR

- Turn ignition switch off.
- Disconnect the Immobilizer control module electrical connectors C-026 (1).
- Inspect the electrical connector for damage.

Is the electrical connector OK?

Yes >> Go to the next step.

No >> Repair or replace the electrical connector as necessary.

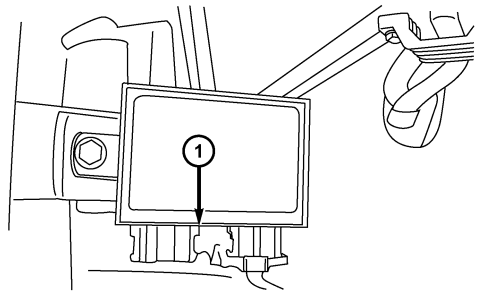

ltsmd150019

4. CHECK IMMOBILIZER COIL

- Check the resistance of the Immobilizer coil between the Immobilizer coil connector C-026, pin 9 and pin 11.

IMMOBILIZER COIL TERMINAL	IMMOBILIZER COIL TERMINAL	
9	11	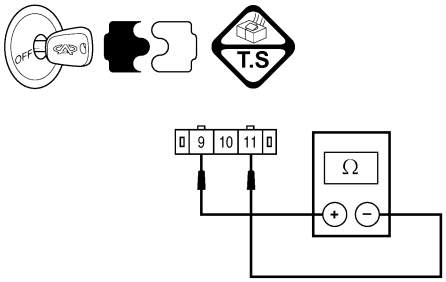

ltsmd150015

Is the resistance range from 5 to 20 ohms?

Yes >> Go to the next step.

No >> Replace the Immobilizer coil.

Downloaded from www.Manualslib.com manuals search engine

5. CHECK IMMOBILIZER COIL

- Check the resistance of the Immobilizer coil between the Immobilizer coil connector C-026, pin 9 and pin 10.
- Check the resistance of the Immobilizer coil between the Immobilizer coil connector C-026, pin 11 and pin 10.

IMMOBILIZER COIL TERMINAL	IMMOBILIZER COIL TERMINAL	CONTINUITY
9	10	Not
11	10	

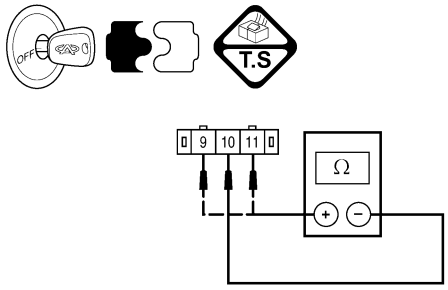

ltsmd150016

- Continuity should not exist.

Is the check result normal?

Yes >> Go to the next step.

No >> Replace the Immobilizer coil.

6. REPLACE AND PROGRAM TRANSPONDER

- Reconnect the Immobilizer control module electrical connector C-026.
- Replace the chip (1) with a new one.

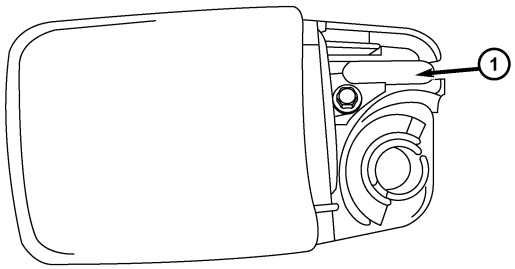

vismd150018

Downloaded from www.Manualslib.com manuals search engine

- Turn ignition switch on.
- With the X-431 scan tool, choose T11 series.
  - Choose "immobilize".
  - Choose "input code".
  - Input the safety code.
  - Click the small keyboard.
  - Click "OK".
  - Choose "Immobilizer adapt".
  - Choose "Key learning" immediately.
  - Click "OK".

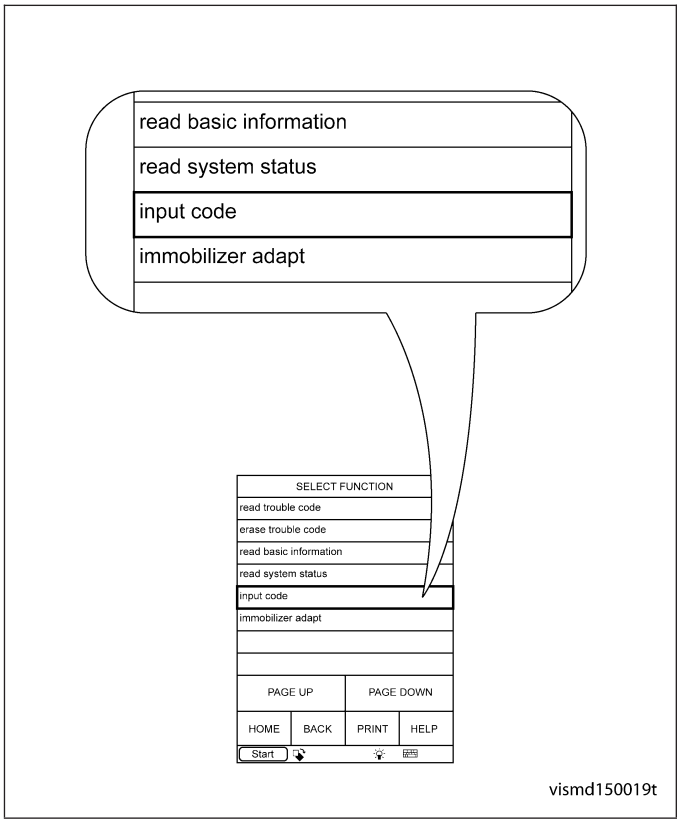

- Try to start the engine.

Is the warning light flashing and DTC B3055 present?

Yes >> Go to the next step.

No >> No problem found at this time.
This concern may have been caused by the transponder.
Erase all codes before returning the vehicle to the customer.

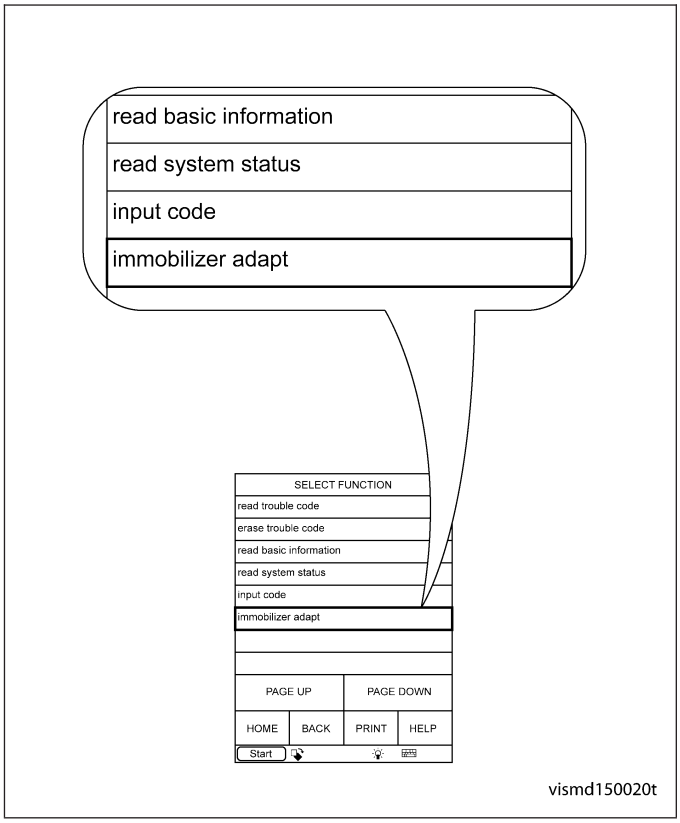

Downloaded from www.Manualslib.com manuals search engine

7. REPLACE AND PROGRAM IMMOBILIZER CONTROL MODULE

- Using the wiring schematic as a guide, inspect the related wiring and connectors of the Immobilizer control module.
- Verify that there is good terminal contact in the related connectors.
- Try to start the engine.
- With the X-431 scan tool, view active DTCs in the Immobilizer control module.

Is the warning light flashing and DTC B3055 or B3056 still present?

Yes >> Replace and match the Immobilizer control module (This concern may have been caused by Immobilizer control module internal fault). Refer to DTC B3077 Diagnostic Procedure.

No >> No problem found at this time.
This concern may have been caused by a loose or corroded terminal or connector.
Erase all codes before returning the vehicle to the customer.

Downloaded from www.Manualslib.com manuals search engine

B3060 - Unprogrammed Transponder Fixed Code Received
B3061 - Disturbed Or No Challenge/Response Transponder Communication
B3077 - Read-Only Transponder Detected

IMMOBILIZER - WITH ACTECO ENGINE SYSTEM

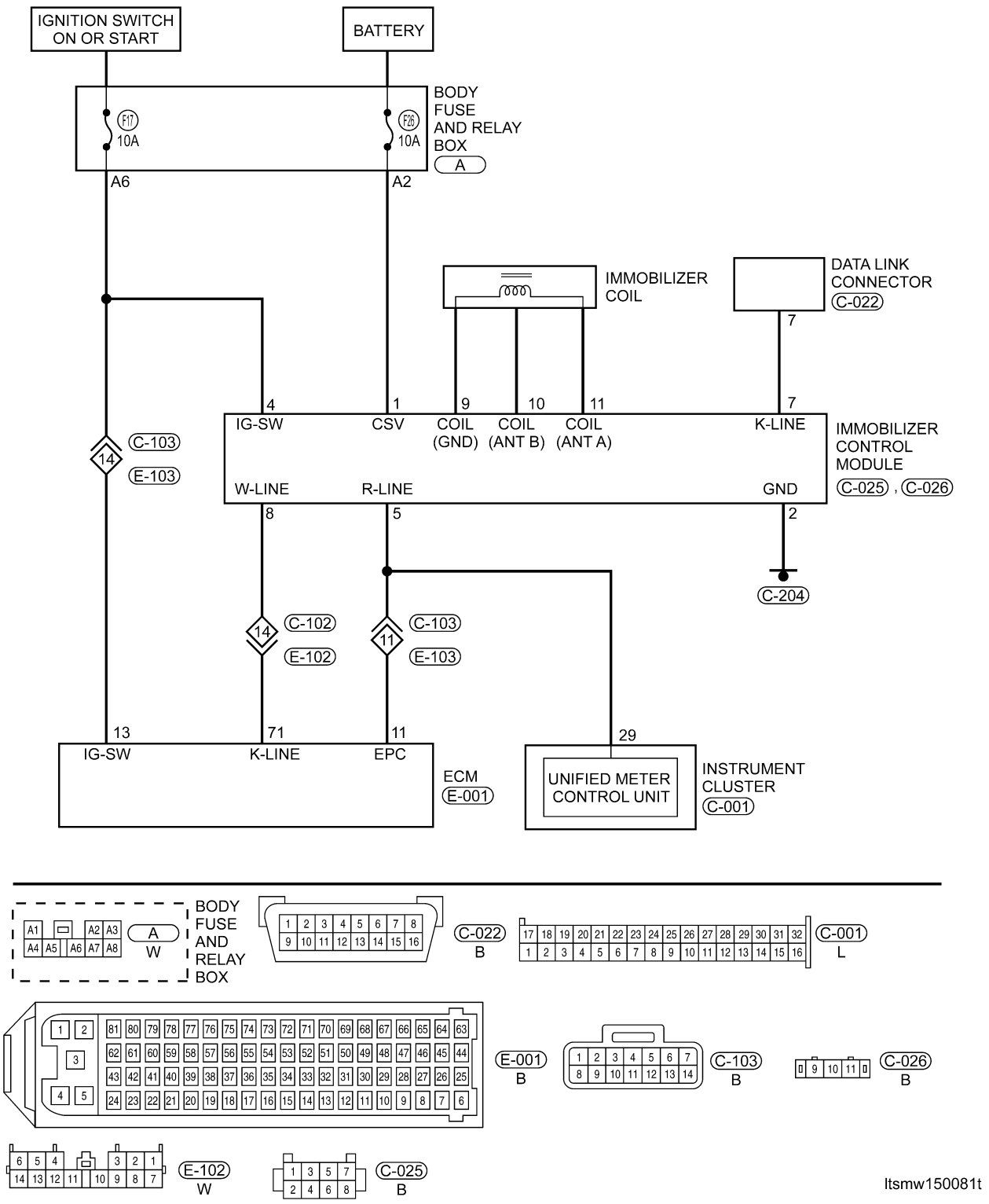

Downloaded from www.Manualslib.com manuals search engine

On Board Diagnostic Logic

- Self-diagnosis detection logic.

DTC NO.	DTC DEFINITION	DTC DETECTION CONDITION	DTC SET CONDITION	POSSIBLE CAUSE
B3060	Unprogrammed transponder fixed code received	Ignition switch: ON	The Immobilizer control module detects the received unprogrammed transponder condition.	• Transponder • Harness or connectors • Immobilizer control module • ECM
B3061	Disturbed or no challenge/response transponder communication		The Immobilizer control module detects the received unprogrammed transponder condition.	
B3077	Read-only transponder detected		The Immobilizer control module detects a read-only transponder condition.	

DTC Confirmation Procedure:

Before performing the following procedure, confirm that battery voltage is more than 12 V.

- Turn ignition switch off.
- Connect the X-431 scan tool to the Data Link Connector (DLC) - use the most current software available.
- Turn the ignition switch on, with the scan tool, view and erase stored DTCs in the Immobilizer control module.
- Try to start the engine.
- Turn the ignition switch off, and wait a few seconds, then turn the ignition switch on.
- With the scan tool, view active DTCs in the Immobilizer control module.
- If the DTC is detected, the condition is current. Go to Diagnostic Procedure - Step 1.
- If the DTC is not detected, the DTC condition is intermittent (See Diagnostic Help and Intermittent DTC Troubleshooting in Section 15 Body & Accessories for more information).

NOTE :
While performing electrical diagnosis & testing, always refer to the electrical schematics for specific circuit and component information.

Downloaded from www.Manualslib.com manuals search engine

Diagnostic Procedure

1. CHECK GROUND CONNECTION

- Turn ignition switch off.
- Loosen and retighten ground screws on the body (See Ground Inspection in Section 15 Body & Accessories).
- Inspect ground connection C-204 mounting position (See Vehicle Wiring Harness Layout - Main Harness in Section 16 Wiring).

Is the ground connection OK?

Yes >> Go to the next step.

No >> Repair or replace ground connection.

2. CHECK IMMOBILIZER CONTROL MODULE DTC

- With the scan tool, view DTCs in the Immobilizer control module. Refer to DTC confirmation procedure.

Is DTC B3060, B3061 or B3077 present?

Yes >> For DTC B3060, go to step 5.
For DTC B3061, go to the next step.
For DTC B3077, go to step 6.

No >> The condition that caused the DTC is currently not present. Monitor the scan tool data relative to this circuit while wiggle testing the wiring and connectors and looking for the DTC to reset.
Using the wiring schematic as a guide, inspect the related wiring and connectors of the Immobilizer control module.
Verify that there is good terminal contact in the related connectors.

3. CHECK IMMOBILIZER CONTROL MODULE ELECTRICAL CONNECTOR

- Turn ignition switch off.
- Disconnect the Immobilizer control module electrical connectors C-026 (1).
- Inspect the electrical connector for damage.

Is the electrical connector OK?

Yes >> Go to the next step.

No >> Repair or replace the electrical connector as necessary.

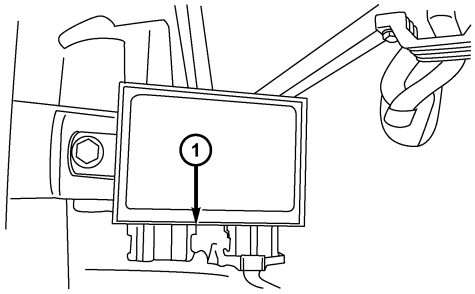

ltsmd150019

Downloaded from www.Manualslib.com manuals search engine

4. CHECK THE IMMOBILIZER COIL

- Check the resistance of the Immobilizer coil between the Immobilizer coil connector C-026, pin 9 and pin 11.

IMMOBILIZER COIL TERMINAL	IMMOBILIZER COIL TERMINAL	
9	11	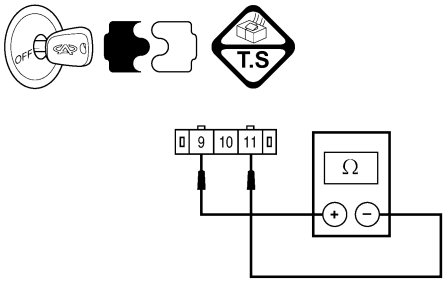 ltsmd150015

Is the resistance range from 5 to 20 ohms?

Yes >> Go to the next step.

No >> Replace the Immobilizer coil.

5. CHECK IMMOBILIZER COIL

- Check the resistance between the Immobilizer coil connector C-026, pin 9 and pin 10.
- Check the resistance between the Immobilizer coil connector C-026, pin 11 and pin 10.

IMMOBILIZER COIL TERMINAL	IMMOBILIZER COIL TERMINAL	CONTINUITY	
9	10	Not	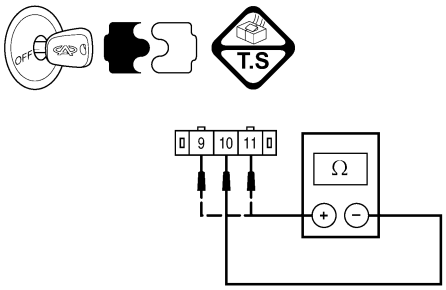 ltsmd150016
11	10		

Is the check result normal?

Yes >> Go to the next step.

No >> Replace the Immobilizer coil.

Downloaded from www.Manualslib.com manuals search engine

6. PROGRAM THE TRANSPONDER

- Turn ignition switch on.
- Using the X-431 scan tool, program the vehicle security system.
-
- Turn ignition switch on and perform the following:
  - With the X-431 scan tool, choose T11 series.
  - Choose ″immobilize″.
  - Input the safety code.
  - Click the small keyboard.
  - Click ″OK″.
  - Choose ″Immobilizer adapt″.
  - Choose ″Key learning″ immediately.
  - Click ″OK″.

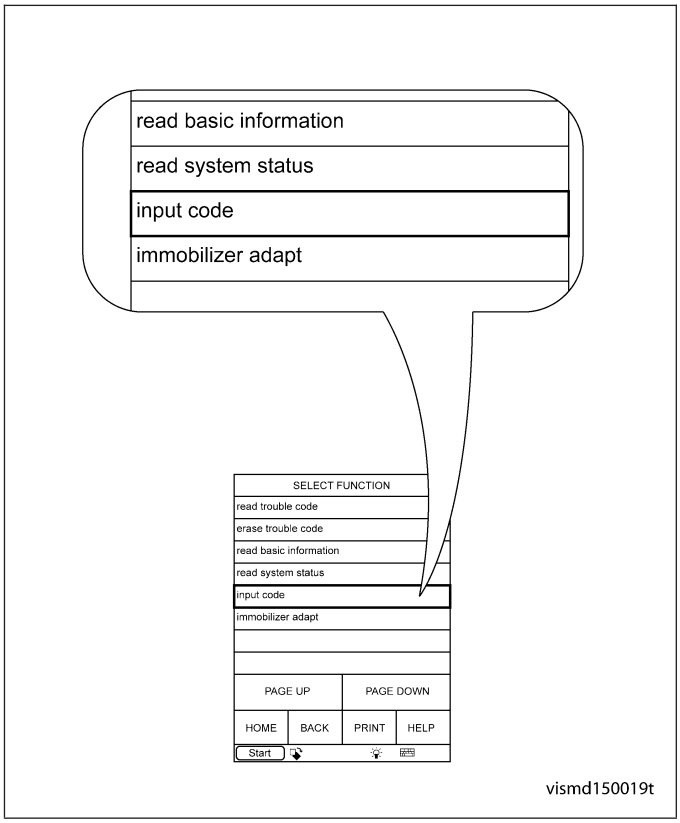

- Try to start the engine.
- With the X-431 scan tool, view active DTCs in the Immobilizer control module.

Is DTC B3060, B3061 or B3077 present?

Yes >> Go to the next step.

No >> No problem found at this time.
This concern may have been caused by the not programmed transponder.
Erase all codes before returning the vehicle to the customer.

7. REPLACE AND PROGRAM THE TRANSPONDER

- Replace the chip (1) with a new one.

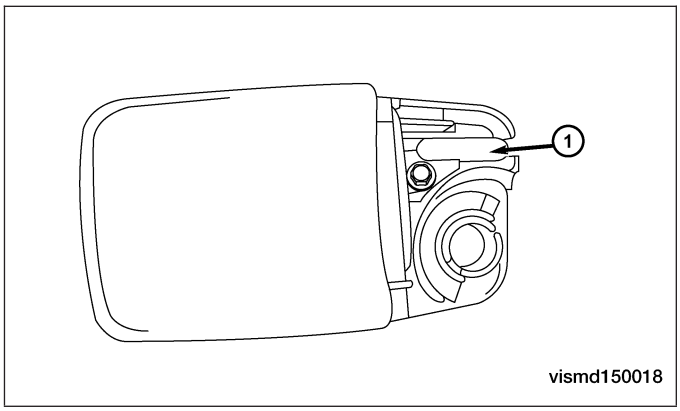

Downloaded from www.Manualslib.com manuals search engine

- Turn ignition switch on.
- Repeat step 5.
- Try to start the engine.
- With the X-431 scan tool, view DTCs in the Immobilizer control module.

Is DTC B3060, B3061 or B3077 present?

Yes >> Replace and program the Immobilizer control module (See Immobilizer Control Module Removal & Installation in Chapter 15 Body & Accessories). Go to the next step.

No >> No problem found at this time.
This concern may have been caused by the transponder fault.
Erase all codes before returning the vehicle to the customer.

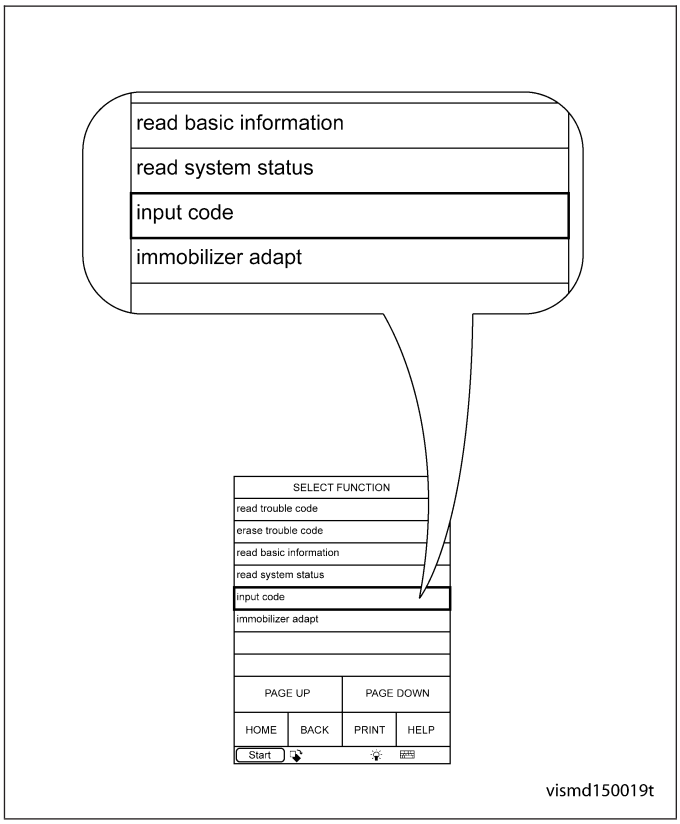

8. VERIFY NEW IMMOBILIZER CONTROL MODULE

- Try to start the engine.
- With the X-431 scan tool, view active DTCs in the Immobilizer control module.

Is DTC B3060, B3061 or B3077 present?

Yes >> Go to the next step.

No >> No problem found at this time.
This concern may have been caused by the Immobilizer control module fault.
Erase all codes before returning the vehicle to the customer.

9. REPLACE AND MATCH ECM

- Using the wiring schematic as a guide, inspect the related wiring and connectors of the ECM.
- Verify that there is good terminal contact in the related connectors.
- Try to start the engine.
- With the X-431 scan tool, view active DTCs in Immobilizer control module.

Is DTC B3060, B3061 or B3077 still present?

Yes >> Replace the ECM and match the ECM to the Immobilizer control module (See Electronic Control Module Removal & Installation in Section 03 Electronic Engine Controls) (This concern may have been caused by an ECM internal fault).

No >> No problem found at this time.

Downloaded from www.Manualslib.com manuals search engine

Immobilizer Control Module

Removal & Installation

1. Remove the instrument panel (See Instrument Panel Removal & Installation in Section 15 Body & Accessory).
2. Remove the steering column mounting bolts.
3. Remove the Immobilizer control module mounting bolt (1).

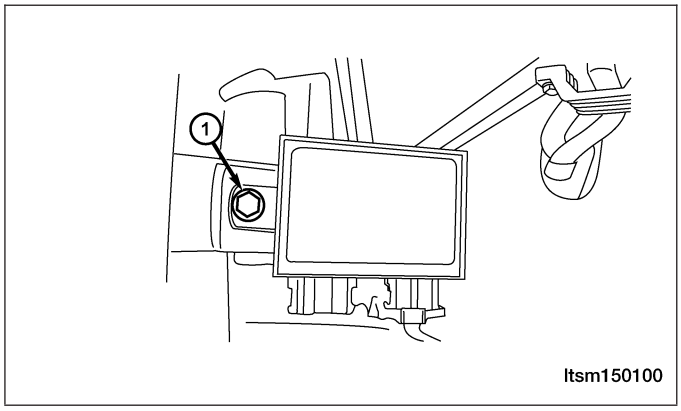

4. Disconnect the Immobilizer control module electrical harness.
5. Installation is in the reverse order of removal.

Installation Notes:

•

NOTE :
The Immobilizer control module must be matched to the ECM before the vehicle will start.

Matching Engine Control Module (ECM) To New Immobilizer Control Module

Perform the following to match the ECM to the Immobilizer control module:

- With the X-431 scan tool, choose T11 series.
- Choose ″immobilize″.
- Choose ″input code″.
- Input the safety code.
- Click the small keyboard.
- Click ″OK″.
- Choose ″Immobilizer adapt″.
- Choose ″read EMS to Immobilizer″ immediately.
- Click ″OK″.

Downloaded from www.Manualslib.com manuals search engine

BODY EXTERIOR

BODY DIMENSIONS 15-147
Description 15-147

Front Body Structure 15-148
Dimension of Engine Compartment (Units: mm) 15-148

Front Structure 15-151
Dimension of Front Structure (Units: mm) 15-151

Frame 15-153
Body Frame Dimensions (Units: mm) 15-153

Vehicle Clearance 15-154
Front View 15-154

Body 15-157
Side View 15-157

BUMPERS 15-166

Front Bumper 15-166
Removal & Installation 15-166

DOORS 15-167
Specification 15-167

Front Door 15-168
Removal & Installation 15-168
Disassembly 15-168
Assembly 15-172
Front Door Adjustment 15-172
Replacing Front Door Hinge 15-172

Rear Door 15-173
Removal & Installation 15-173
Disassembly 15-173
Assembly 15-174
Rear Door Adjustment 15-174
Replacing Rear Door Hinge 15-175

Back Cargo Door 15-175
Removal & Installation 15-175
Disassembly 15-175
Assembly 15-177
Back Cargo Door Adjustment 15-177
Replacing Rear Door Hinge 15-177

EXTERIOR LAMPS 15-178
Description 15-178
Operation 15-178
Specification 15-178
Electrical Schematics 15-179

Front Combination Lamp Assembly 15-189
Removal & Installation 15-189
Headlamp Adjustment Procedure 15-190

Rear Combination Lamp Assembly 15-190
Removal & Installation 15-190

Headlamp 15-191
Removal & Installation 15-191

Front Fog Lamp 15-192
Removal & Installation 15-192

Rear Fog Lamp 15-193
Removal & Installation 15-193

Tail/Backup/Stop Lamp 15-194
Removal & Installation 15-194

Turn Signal Lamp 15-195
Removal & Installation 15-195

High Mounted Stop Lamp 15-197
Removal & Installation 15-197

License Plate Lamp 15-197
Removal & Installation 15-197

FENDER 15-199

Front Fender 15-199
Removal & Installation 15-199

FUEL DOOR 15-200

Fuel Door 15-200
Removal & Installation 15-200

GRILLE 15-201

Grille 15-201
Removal & Installation 15-201

HOOD 15-202

Hood 15-202
Removal & Installation 15-202
Hood Adjustment 15-202

Hood Release Cable 15-203
Removal & Installation 15-203

LUGGAGE RACK 15-204

Luggage Rack 15-204
Removal & Installation 15-204

SPARE TIRE SUPPORT 15-205

Spare Tire Support 15-205
Removal & Installation 15-205

HORN 15-206
Description 15-206
Operation 15-206
Electrical Schematics 15-207

Horn 15-208
Removal & Installation 15-208

Downloaded from www.Manualslib.com manuals search engine

MIRRORS 15-209
Description 15-209
Operation 15-209
Electrical Schematics 15-210
Outside Mirror 15-214
Removal & Installation 15-214

PAINT 15-215
Paint Codes 15-215
Paint Codes 15-215

RADIATOR SUPPORT 15-216
Radiator Support 15-216
Removal & Installation 15-216

STATIONARY GLASS 15-217
Description 15-217
Electrical Schematics 15-218
Front Windshield 15-219
Removal 15-219
Installation 15-219
Rear Window 15-221
Removal 15-221
Installation 15-221

SUNROOF 15-224
Description 15-224
Operation 15-225
Electrical Schematics 15-226

DIAGNOSIS & TESTING 15-228
Sunroof Memory Relearn 15-228

ON-VEHICLE SERVICE 15-229
Sunroof Glass 15-229
Removal & Installation 15-229
Sunroof Sun Visor 15-229
Removal & Installation 15-229
Sunroof Motor 15-230
Removal & Installation 15-230
Sunroof Control Module 15-230
Removal & Installation 15-230

WEATHERSTRIP 15-231
Front Door Weatherstrip 15-231
Removal & Installation 15-231
Rear Door Weatherstrip 15-232
Removal & Installation 15-232

WIPERS AND WASHERS 15-233
Description 15-233
Operation 15-233
Electrical Schematics 15-234
Front Wiper Motor 15-238
Removal & Installation 15-238
Rear Wiper Motor 15-239
Removal & Installation 15-239
Front Wiper Arm 15-240
Removal & Installation 15-240
Rear Wiper Arm 15-240
Removal & Installation 15-240
Front Wiper Link 15-241
Removal & Installation 15-241
Washer Bottle 15-241
Removal & Installation 15-241
Washer Pump 15-241
Removal & Installation 15-241
Wiper Switch 15-242
Removal & Installation 15-242

Downloaded from www.Manualslib.com manuals search engine

BODY DIMENSIONS

Description

- All measurements should be made from the bare metal, remove trim and bumper covers as necessary.
- Repair the badly damaged areas before taking measurements for underbody alignment.
- Monitor the upper body structure for excessive stress or movement while making any corrections to the underbody structure.
- Remove all the necessary glass to prevent breakage.
- All dimensions are shown in millimeters (mm).

Downloaded from www.Manualslib.com manuals search engine

Front Body Structure

Dimension of Engine Compartment (Units: mm)

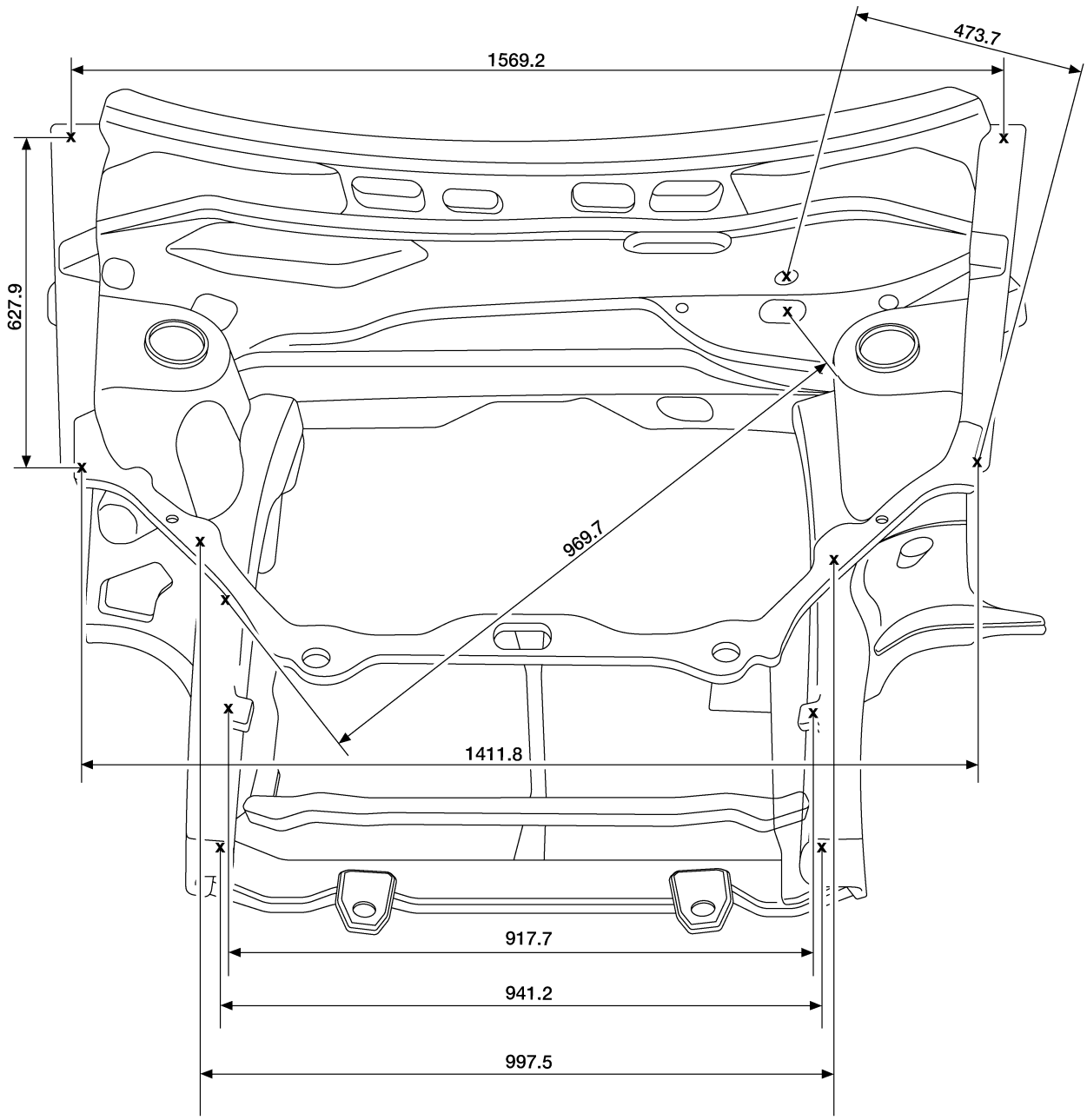

ltsm150032

Downloaded from www.Manualslib.com manuals search engine

Dimension of Body Openings

Dimension of body, Left-Right.

Uppercase letters indicate the right side of the body, lowercase letters indicate the left side of the body (Rear view).

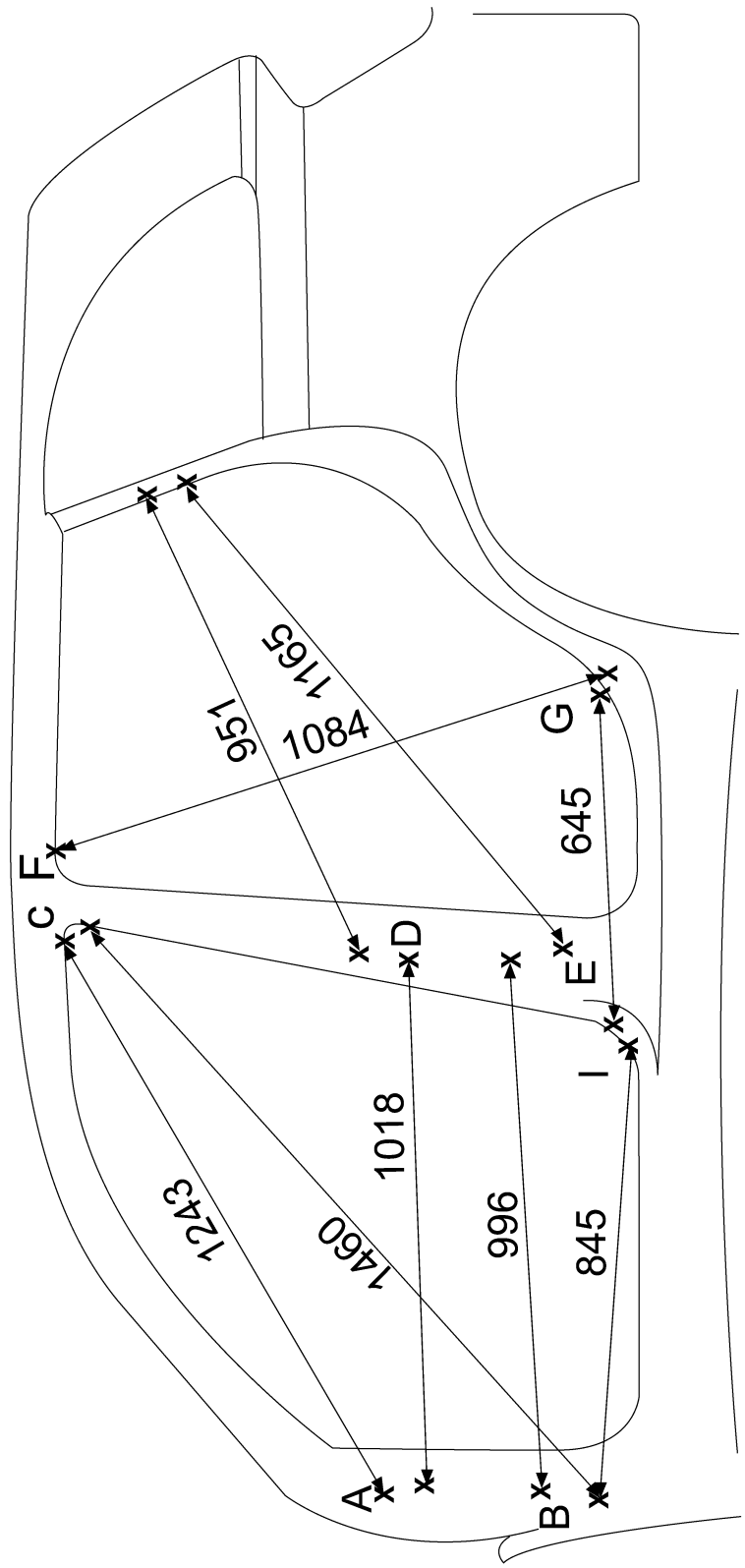

Downloaded from www.Manualslib.com manuals search engine

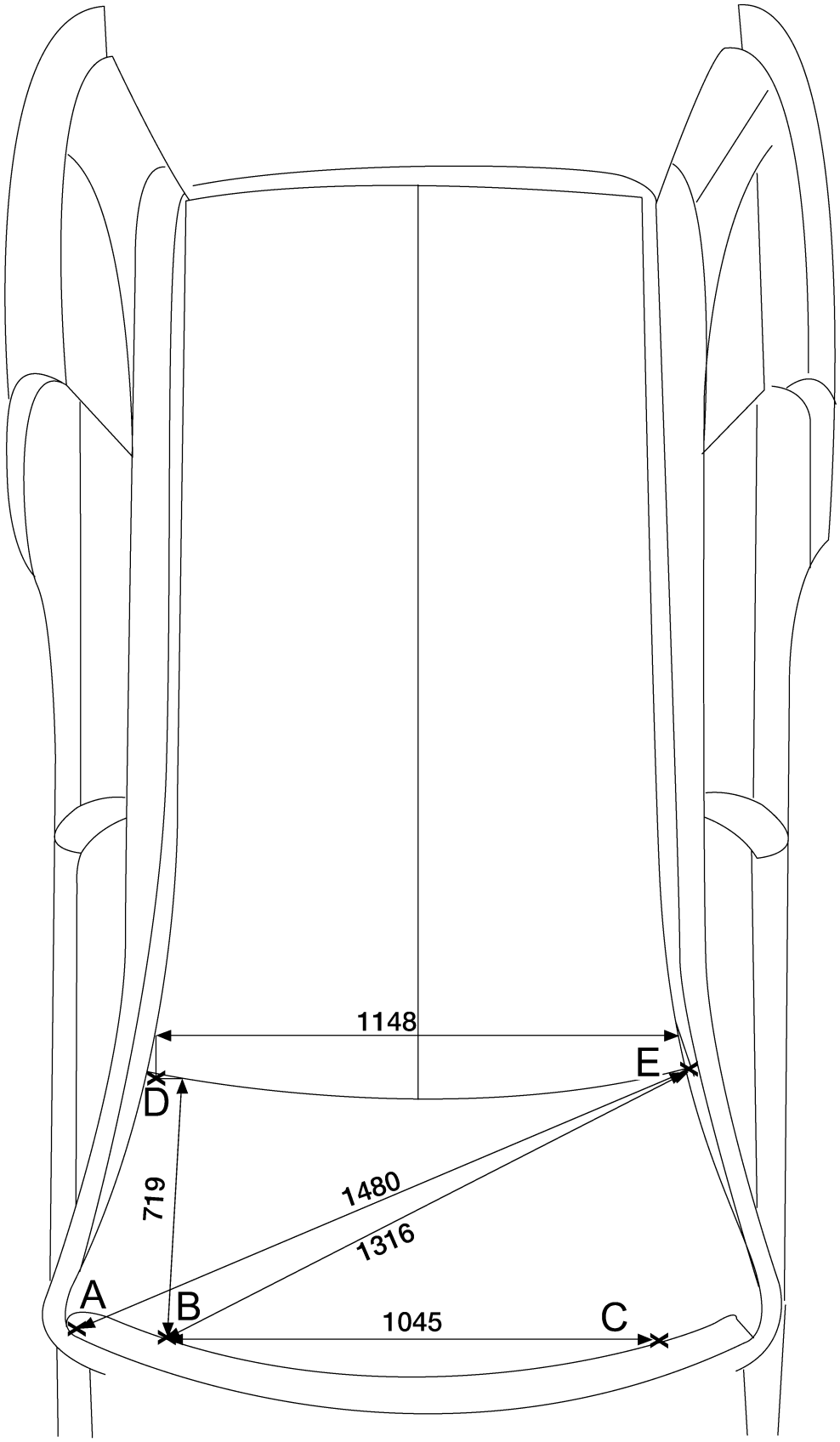

ltsm150003

Downloaded from www.Manualslib.com manuals search engine

Front Structure

Dimension of Front Structure (Units: mm)

Body dimension, Left-Right

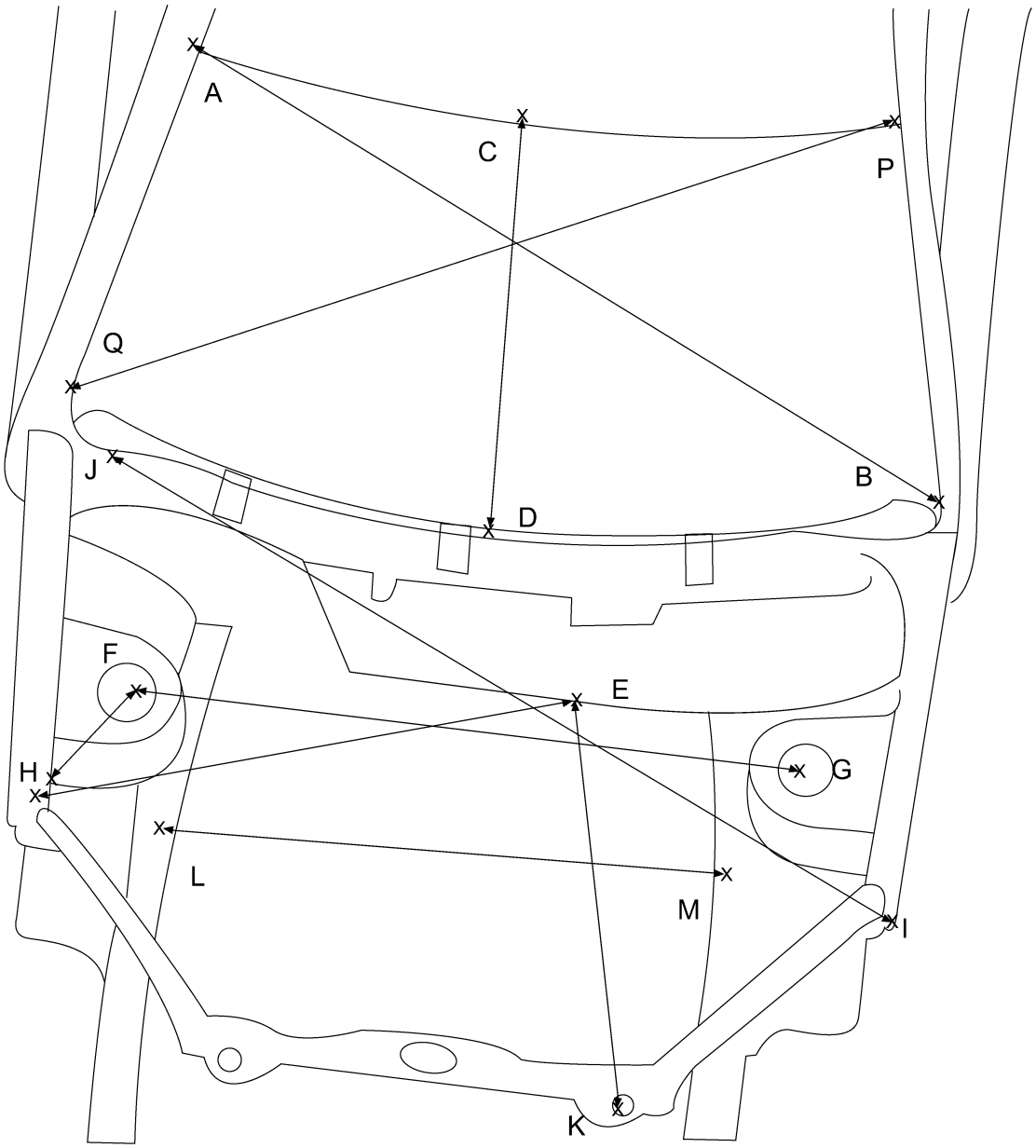

ltsm150001

Downloaded from www.Manualslib.com manuals search engine

S/N	CONTROL DIMENSION (mm)	DESCRIPTION
AB=PQ	1485.8	Diagonal distance of front windshield
CD	733.2	Distance of front windshield at Y0
IJ	1491.6	Center distance between the right end of upper cover of the lower beam of front windshield and the installation hole of front fender
EH	736.1	Center distance between the upper cover hole of the lower beam of front windshield and the installation hole of front fender

S/N	CONTROL DIMENSION (mm)	DESCRIPTION
FH	270.7	Center distance between the hole of front shock absorber and the installation hole of front fender
FG	1126.8	Center distance between the holes of left/right front shock absorber
LM	952.8	Center distance between the holes of left/right engine suspension
KE	690.5	Center distance between the upper cover hole of front windshield beam and the installation hole of radiator

NOTE :
Uppercase letters indicate the left side of the body. Lowercase letters indicate the right side of the body (view from the rear of the vehicle).

Downloaded from www.Manualslib.com manuals search engine

Frame

Body Frame Dimensions (Units: mm)

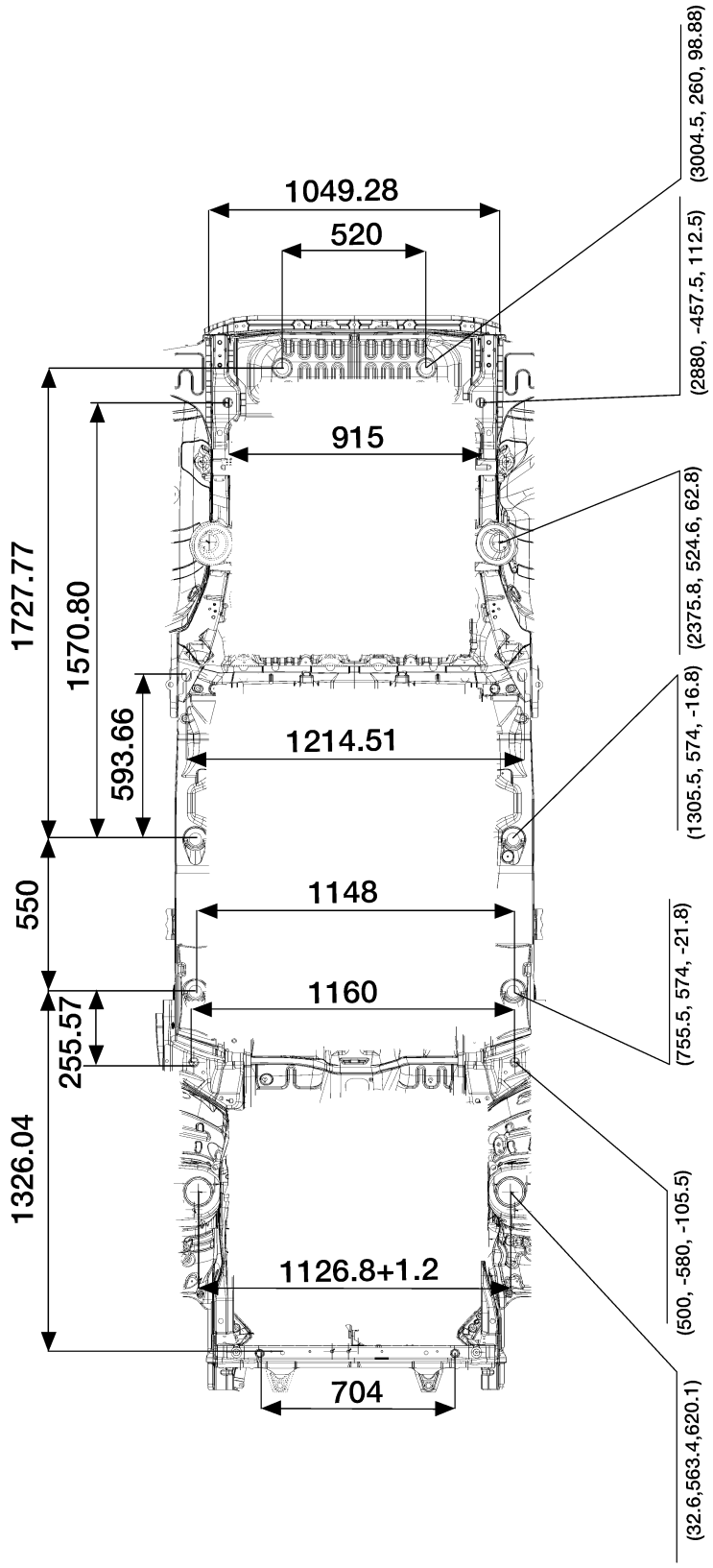

Itsm150004

Downloaded from www.Manualslib.com manuals search engine

Vehicle Clearance

Front View

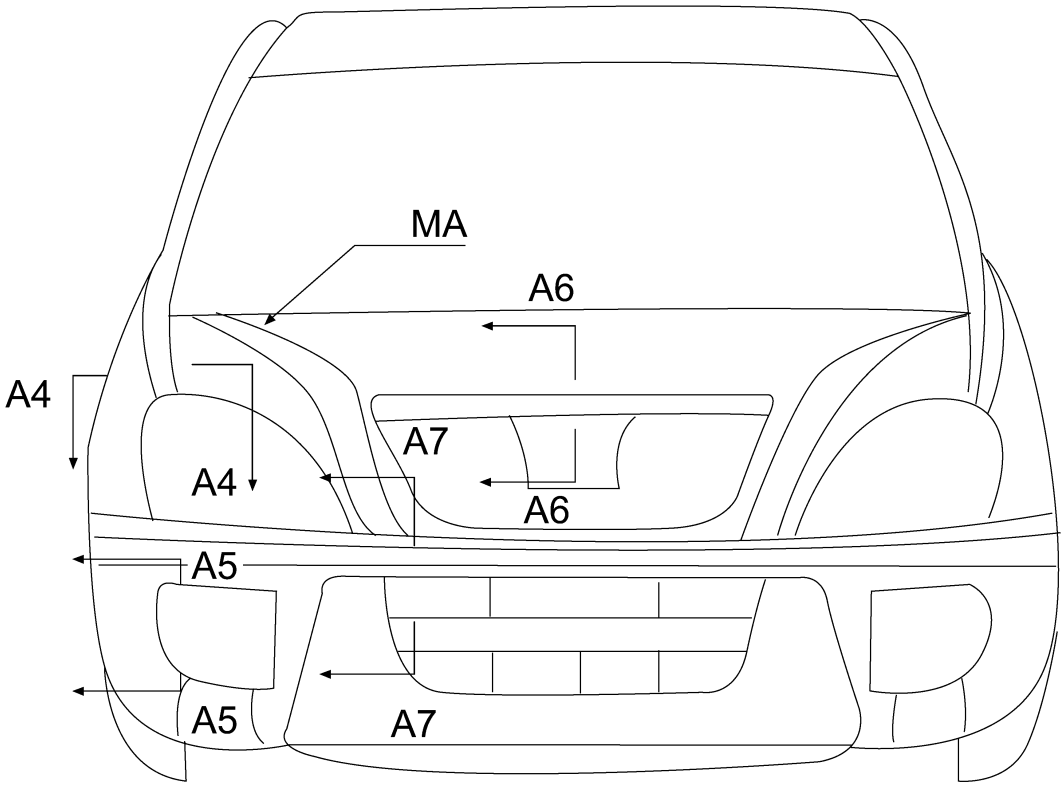

ltsm150005

Downloaded from www.Manualslib.com manuals search engine

Cross section A1-A1, requirements for clearance and levelness.

Cross section A2-A2, requirements for clearance and levelness.

Cross section A3-A3, requirements for clearance and levelness.

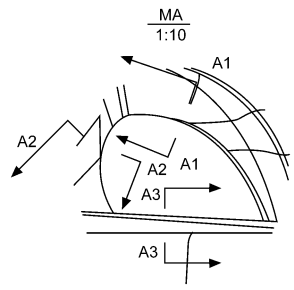

ltsm150006

Cross section A4-A4, requirements for clearance and levelness.

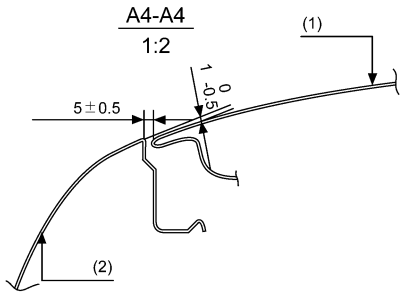

ltsm150007

1 - Hood	2 - Fender

Cross section A5-A5, requirements for clearance and levelness.

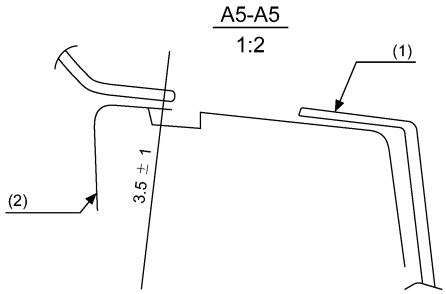

ltsm150008

1 - Fillet	2 - Turning Light

15

Downloaded from www.Manualslib.com manuals search engine

Cross section A6-A6, requirements for clearance and levelness.

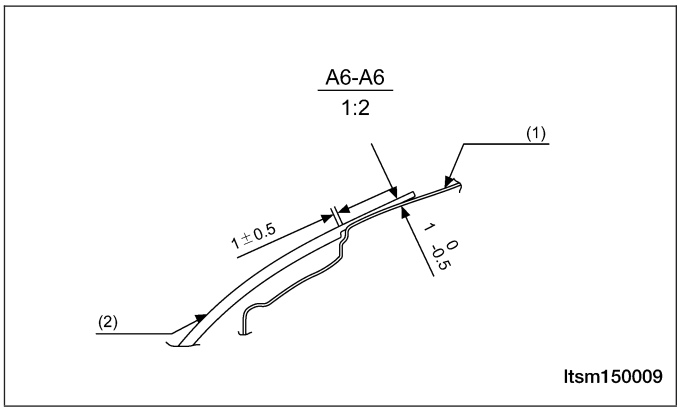

1 - Hood	2 - Cover

Cross section A7-A7, requirements for clearance and levelness.

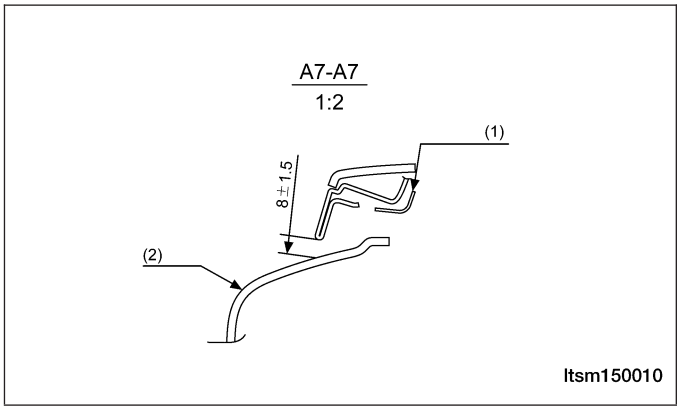

1 - Hood	2 - Front Bumper

Downloaded from www.Manualslib.com manuals search engine

Body

Side View

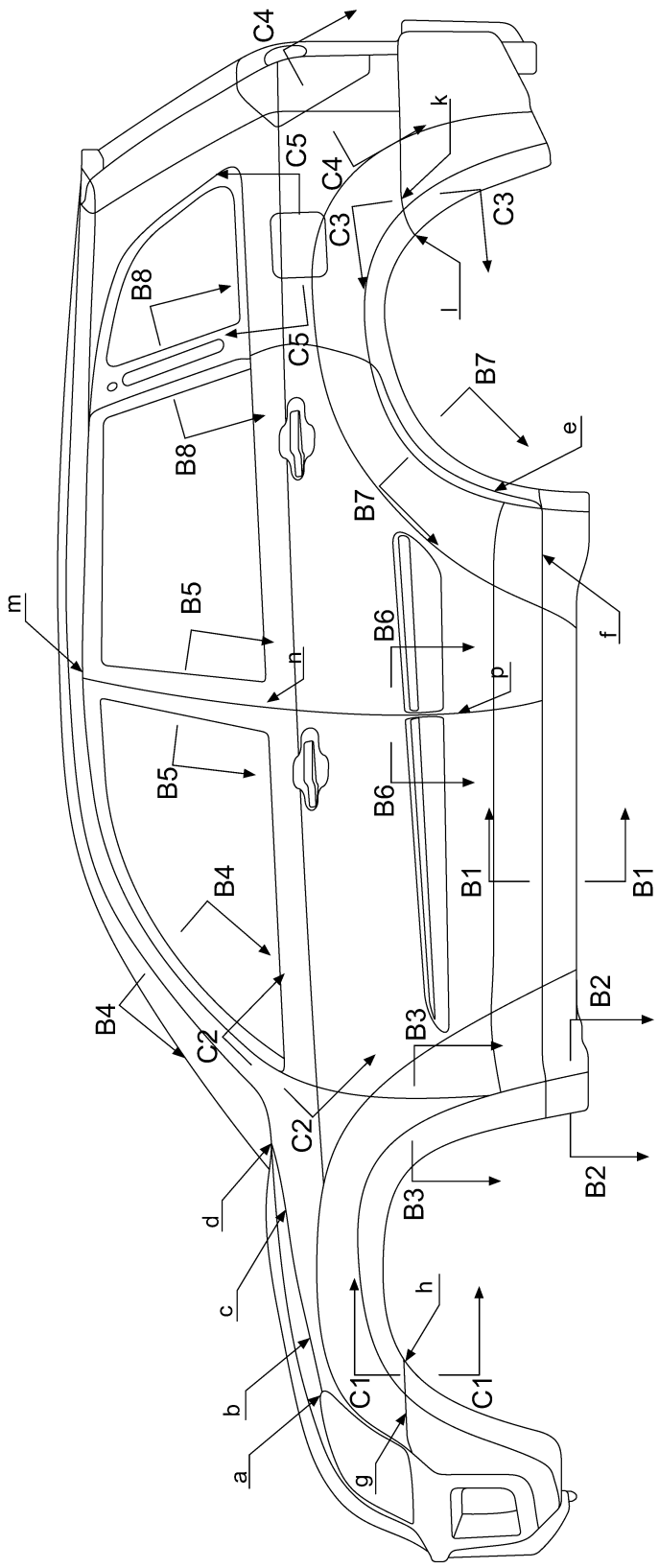

ltsm150011

Downloaded from www.Manualslib.com manuals search engine

NOTE :

- The levelness from point A to B should be evenly changed from 0 to 1, and the levelness from point C to B should be evenly changed from 1 to 0.
- The clearance from point F to C should be evenly changed from 6 to 7, and the levelness from point G to H should be evenly changed from 1 to 0.
- The levelness from point K to J should be evenly changed from 0 to 1.
- The tolerance of clearance between front and back doors at MN, NP sections should be within 1.2 mm.

Cross section B1-B1, requirements for clearance and levelness.

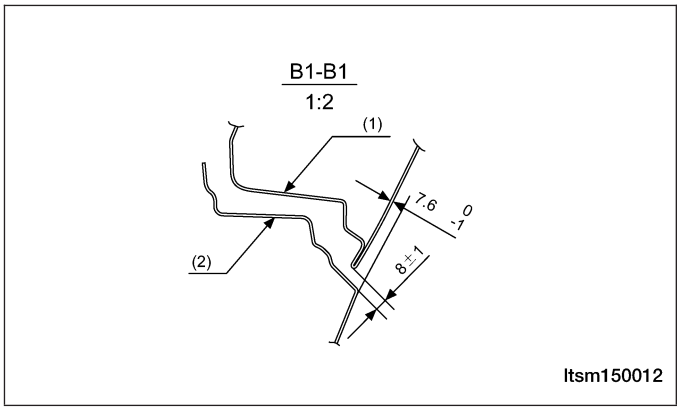

1 - Front Rear Door	2 - Side Wall

Cross section B2-B2, requirements for clearance and levelness.

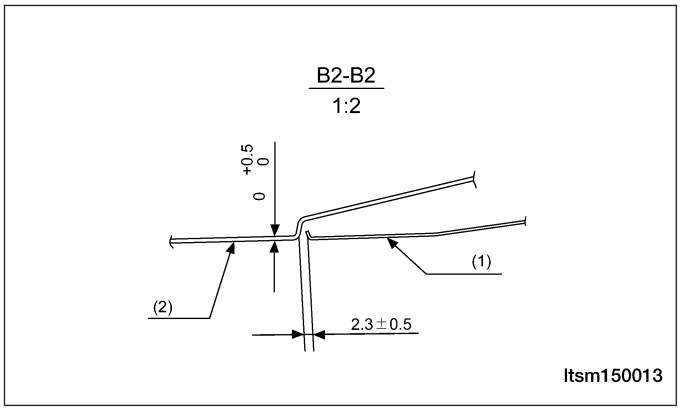

1 - Fender	2 - Side Wall

Downloaded from www.Manualslib.com manuals search engine

Cross section B3-B3, requirements for clearance and levelness.

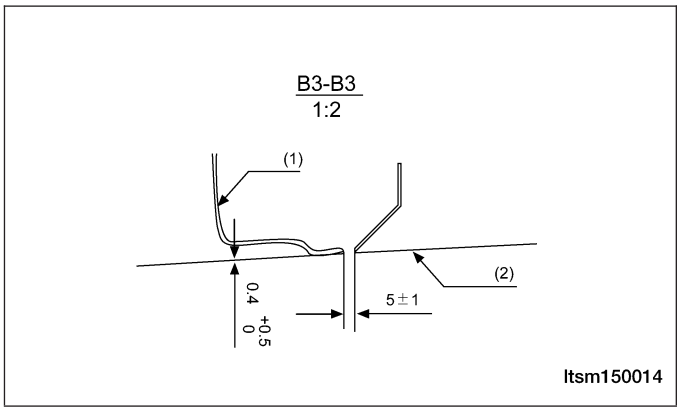

1 - Front Door	2 - Fender

Cross section B4-B4, requirements for clearance and levelness.

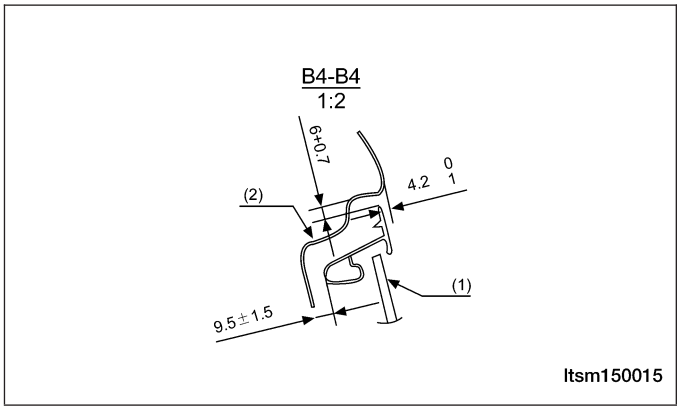

1 - Front Rear Door	2 - Side Wall

Cross section B5-B5, requirements for clearance and levelness.

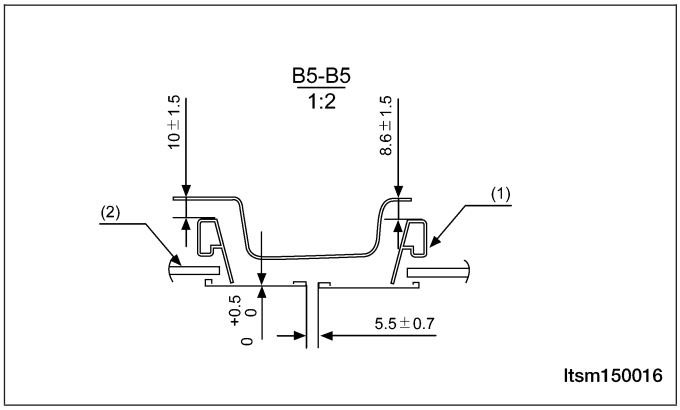

1 - Front Door	2 - Back Door

Downloaded from www.Manualslib.com manuals search engine

Cross section B6-B6, requirements for clearance and levelness.

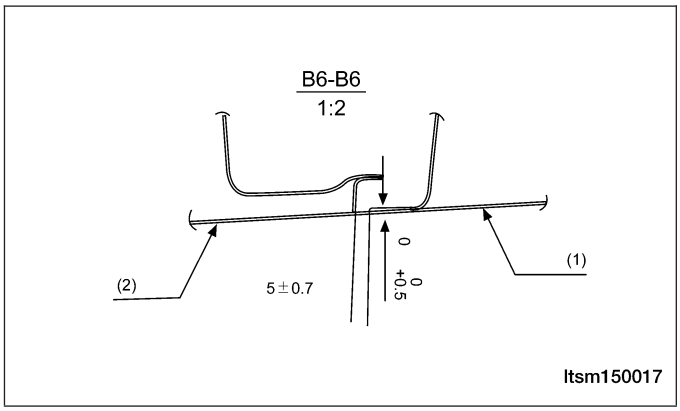

1 - Front Door	2 - Back Door

Cross section B7-B7, requirements for clearance and levelness.

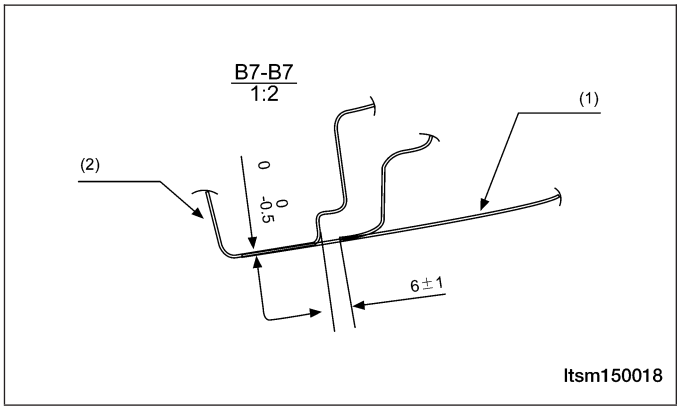

1 - Back Door	2 - Side Wall

Cross section B8-B8, requirements for clearance and levelness.

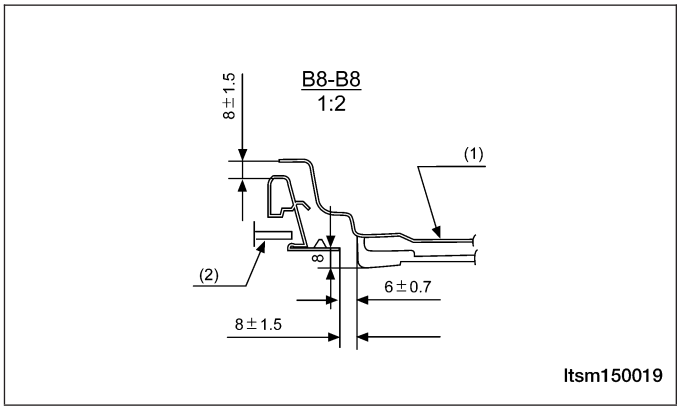

1 - Rear Triangle Window	2 - Back Door

Downloaded from www.Manualslib.com manuals search engine

Cross section B1-B1, requirements for clearance and levelness.

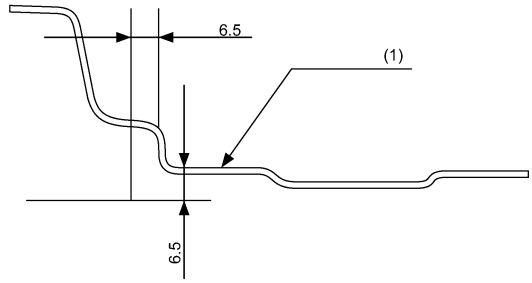

ltsm150020

1 - External Plate Of Side Wall

Cross section C1-C1, requirements for clearance and levelness.

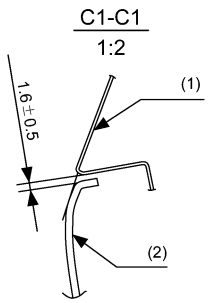

ltsm150021

1 - Fender	2 - Front Bumper

Cross section C2-C2, requirements for clearance and levelness.

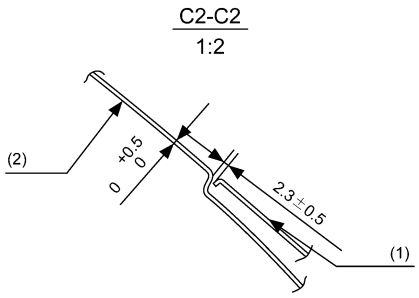

ltsm150022

1 - Fender	2 - Side Wall

Downloaded from www.Manualslib.com manuals search engine

Cross section C3-C3, requirements for clearance and levelness.

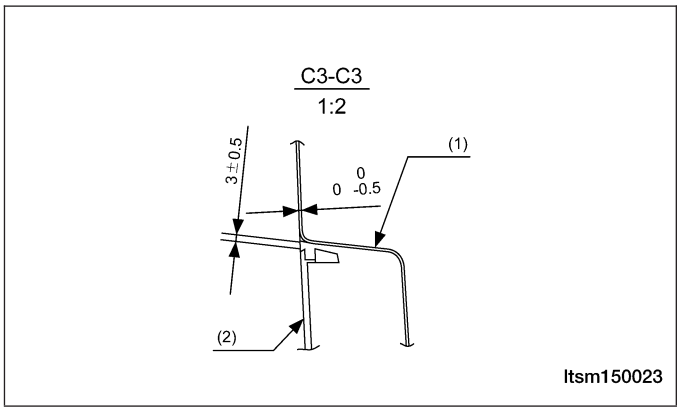

1 - Side Wall	2 - Rear Bumper

Cross section C4-C4, requirements for clearance and levelness.

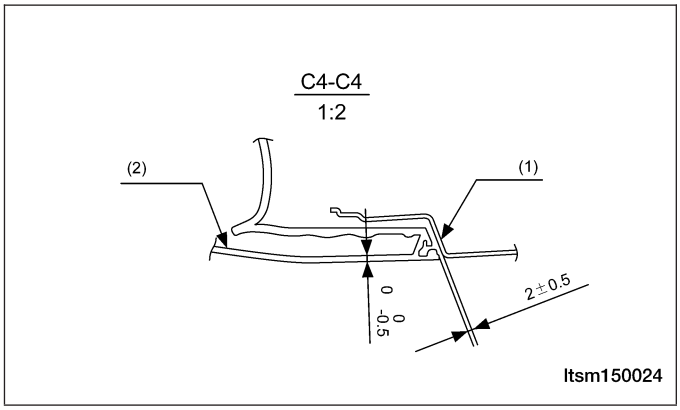

1 - Side Wall	2 - Rear Headlight

Cross section C5-C5, requirements for clearance and levelness.

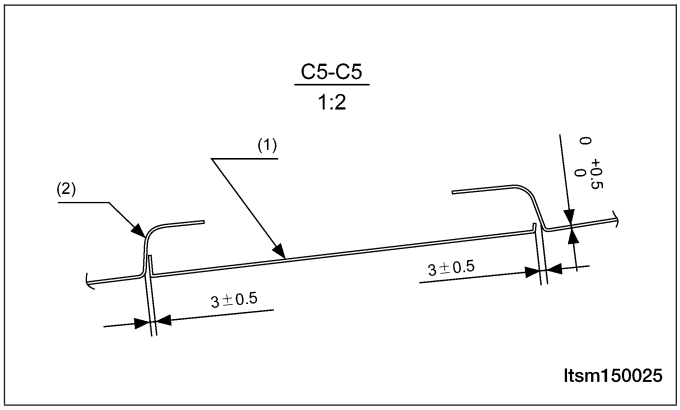

1 - Fuel Tank Cover	2 - Side Wall

Downloaded from www.Manualslib.com manuals search engine

Rear View

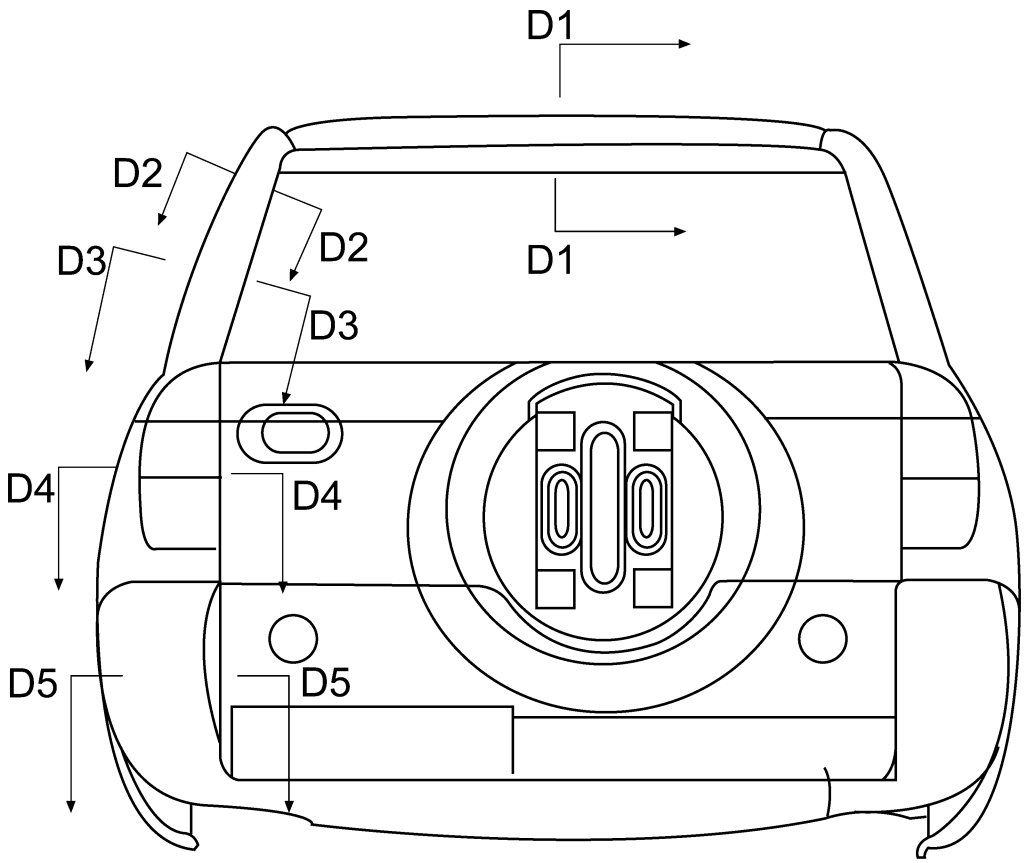

ltsm150026

Downloaded from www.Manualslib.com manuals search engine

Cross section D1-D1, requirements for clearance and levelness.

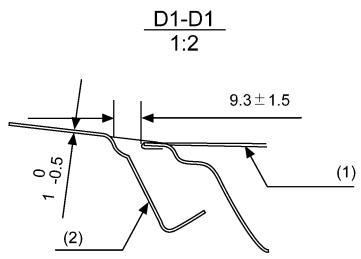

ltsm150027

1 - Rear Back Door	2 - Head Cover

Cross section D2-D2, requirements for clearance and levelness.

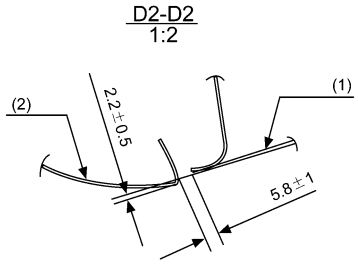

ltsm150028

1 - Rear Back Door	2 - Side Wall

Cross section D3-D3, requirements for clearance and levelness.

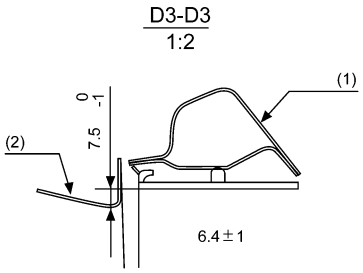

ltsm150029

1 - Rear Back Door	2 - Side Wall

Downloaded from www.Manualslib.com manuals search engine

Cross section D4-D4, requirements for clearance and levelness.

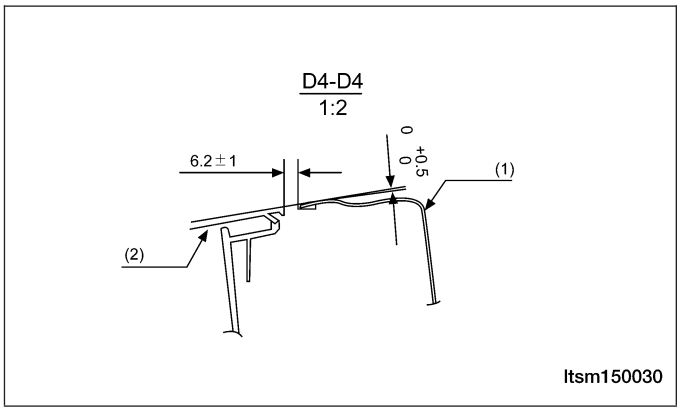

1 - Rear Back Door	2 - Rear Headlight

Cross section D5-D5, requirements for clearance and levelness.

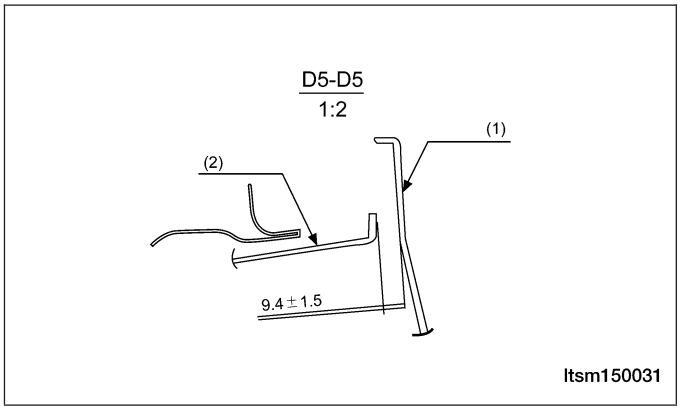

1 - Right Section Of Rear Bumper	2 - Middle Section Of Rear Bumper

Downloaded from www.Manualslib.com manuals search engine

BUMPERS

Front Bumper

Removal & Installation

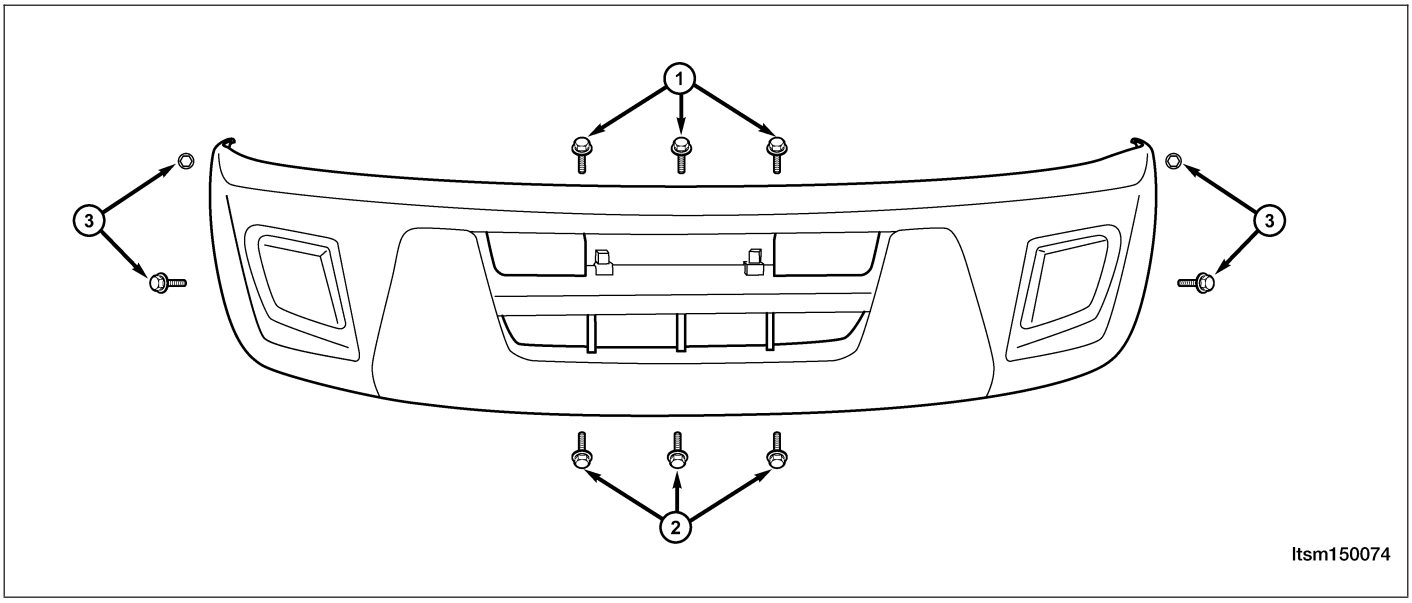

1. Remove the left and right headlamp (See Headlamp Removal & Installation in Section 15 Body & Accessories).
2. Remove the three front bumper mounting bolts (1).
3. Remove the front bumper side mounting bolts and the connecting bolts (3) from the front wheel house.
4. Raise the vehicle and remove the mounting bolts (2) under the front bumper.
5. Disconnect the front fog light electrical connectors and remove the front bumper.
6. Installation is in the reverse order of removal.

Downloaded from www.Manualslib.com manuals search engine

DOORS

Specification

Torque Specifications

DESCRIPTION	TORQUE (N·m)
Left/Right Front Door Upper Hinge to Body Bolts	36 ± 4
Left/Right Front Door Upper Hinge to Door Bolts	36 ± 4
Left/Right Front Door Lower Hinge to Body Bolts	36 ± 4
Left/Right Front Door Lower Hinge to Door Bolts	36 ± 4
Left/Right Rear Door Upper Hinge to Body Bolts	36 ± 4
Left/Right Rear Door Upper Hinge to Door Bolts	36 ± 4
Left/Right Rear Door Lower Hinge to Body Bolts	36 ± 4
Left/Right Rear Door Lower Hinge to Door Bolts	36 ± 4
Back Door Upper Hinge to Body Bolts	36 ± 4
Back Door Upper Hinge to Door Bolts	50 ± 5
Back Door Lower Hinge to Body Bolts	35 ± 3
Back Door Lower Hinge to Door Bolts	50 ± 5
Left Hood Hinge to Body Bolts	23 ± 2
Left Hood Hinge to Hood Bolts	23 ± 2
Right Hood Hinge to Body Bolts	23 ± 2
Right Hood Hinge to Hood Bolts	23 ± 2
Rear Mounting Bracket of Front Fender to Body Bolts	10 ± 1
Left/Right Front Fender to Body Bolts	10 ± 1
Radiator Support to Body Bolts	10 ± 1

Downloaded from www.Manualslib.com manuals search engine

Front Door

Removal & Installation

1. Disconnect the negative battery cable.
2. Disconnect the inner harness electrical connector on the front door.
3. Remove the mounting bolts (1) from the front door hinge.
4. Remove the front door assembly.

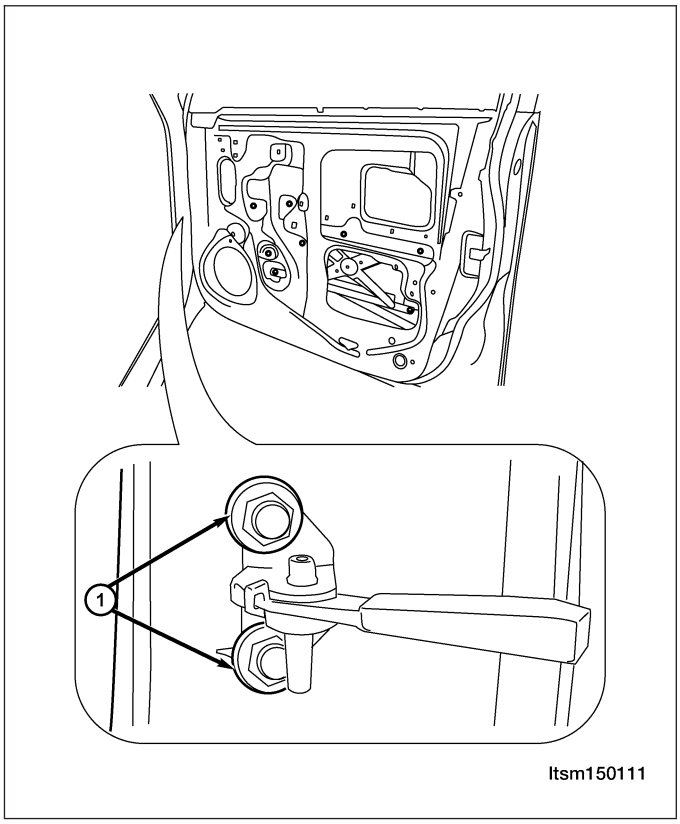

5. Installation is in the reverse order of removal.

Disassembly

1. Turn the ignition switch off.
2. Using a small trim stick, remove the pull handle cover (1) from the pull handle (2).

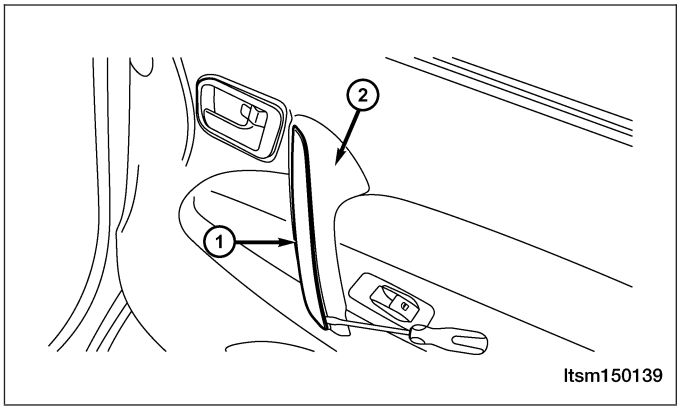

Downloaded from www.Manualslib.com manuals search engine

3. Remove the inner door handle mounting screw (1).
4. Remove the pull handle mounting screws (2).

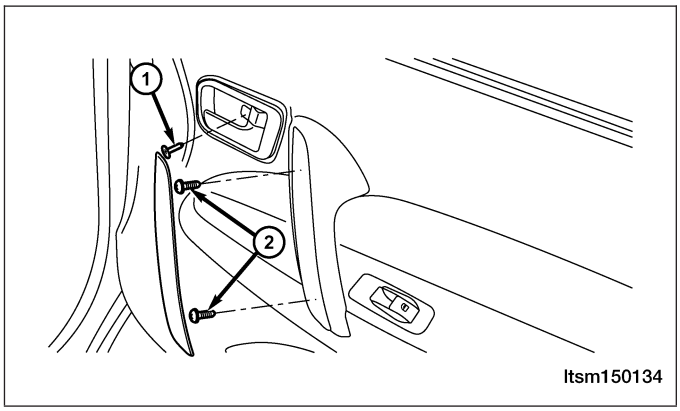

5. Using a small trim stick, remove the inner door handle trim bezel (1).

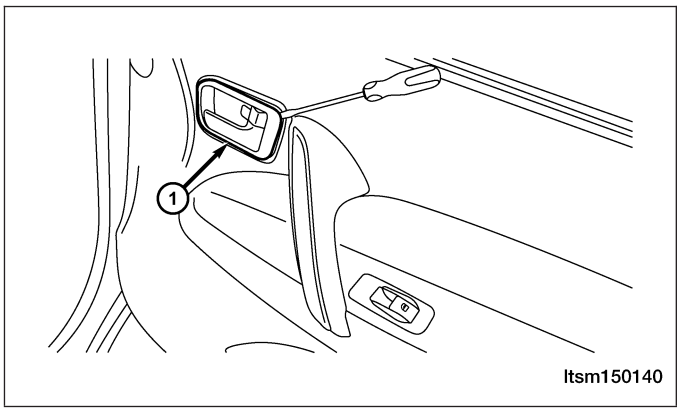

6. Carefully pry the door trim panel clips from the door.
7. Disconnect the power window switch and the door lamp electrical connector.
8. Remove the door trim panel.
9. Disconnect the speaker connector (1).
10. Remove the inner door handle assembly mounting screw (2).
11. Disconnect the inner door handle cables (3).
12. Remove the protective film (4).

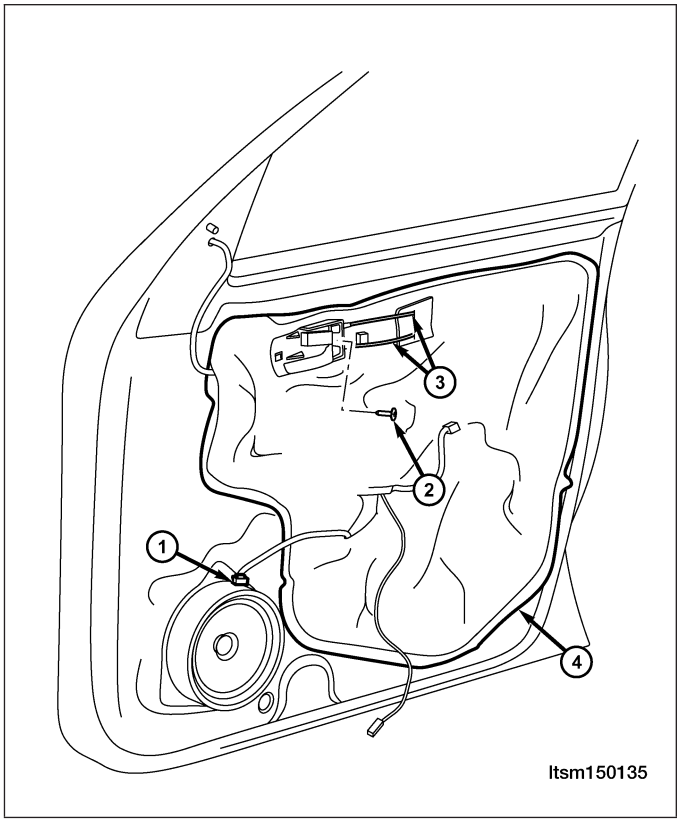

Downloaded from www.Manualslib.com manuals search engine

13. Temporarily connect the power window switch.
14. Turn the ignition switch on and use the power window switch to move the front door glass to a position so the door glass bolts can be removed.
15. Turn the ignition switch off and disconnect the power window switch.
16. Remove the two door glass mounting bolts (1).
    (Tighten: Door glass mounting bolts to 11 N·m)

    NOTE: Properly support the door glass when removing the mounting bolts. The door glass may drop and be damaged.

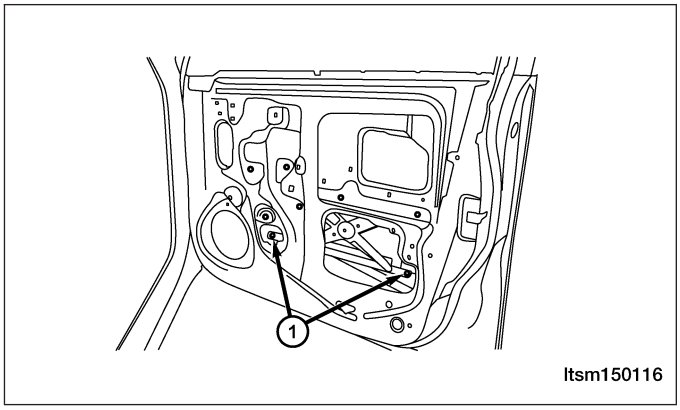

17. Remove the door glass weatherstrip (1).
18. Lift the door glass and remove the door glass from the door.

    NOTE: Take care not to damage the door glass.

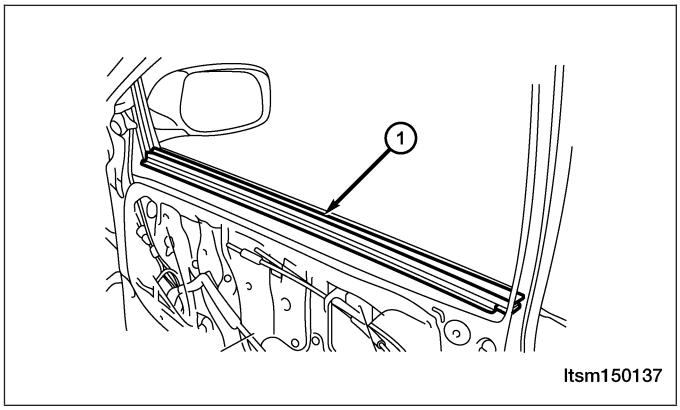

19. Disconnect the power window motor electrical connector.
20. Remove the six power window regulator mounting bolts (1).
    (Tighten: Power window regulator mounting bolts to 11 N·m)

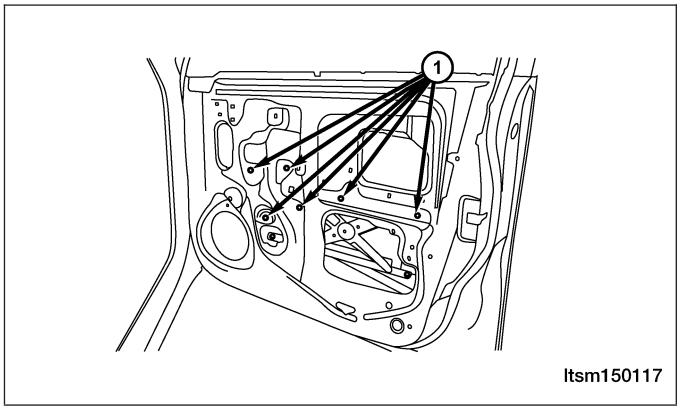

21. Carefully remove the power window regulator.
22. Remove the power window motor from the regulator.
23. Remove three door lock assembly retaining bolts.
    (Tighten: Door lock assembly retaining bolts to 9 ± 1 N·m)

Downloaded from www.Manualslib.com manuals search engine

24. Remove the internal unlock cable (1) and lock cable (2).

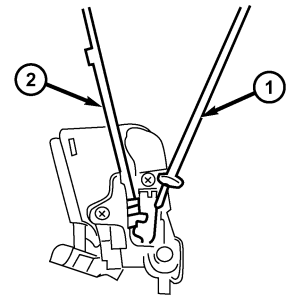

ltsm150098

25. Remove the lock buckle with screwdriver. (Tighten: Lock buckle screws to 12 ± 2 N·m)
26. Remove the front door outside handle.
27. Remove the front door panel and then the protective film.
28. Pry up on the cover (1) of the outside handle.
29. Remove the mounting bolts with hexagon spline wrench.

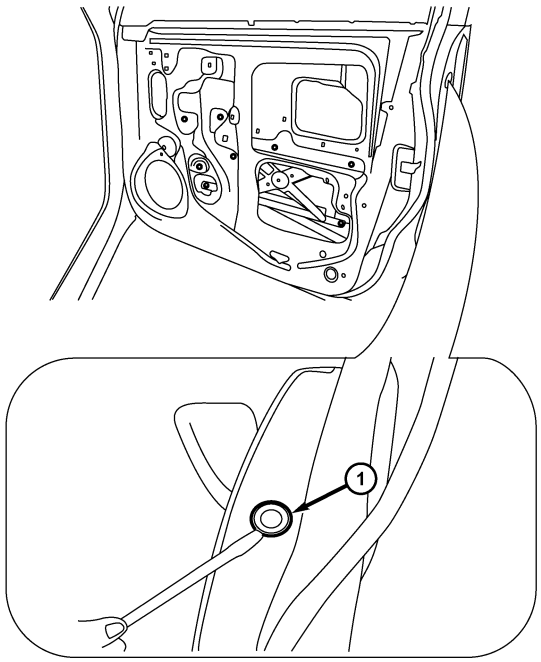

ltsm150114

Downloaded from www.Manualslib.com manuals search engine

30. Detach the lock from the linkage rod, remove the lock and the cover of left front door.
31. Remove the outside handle.

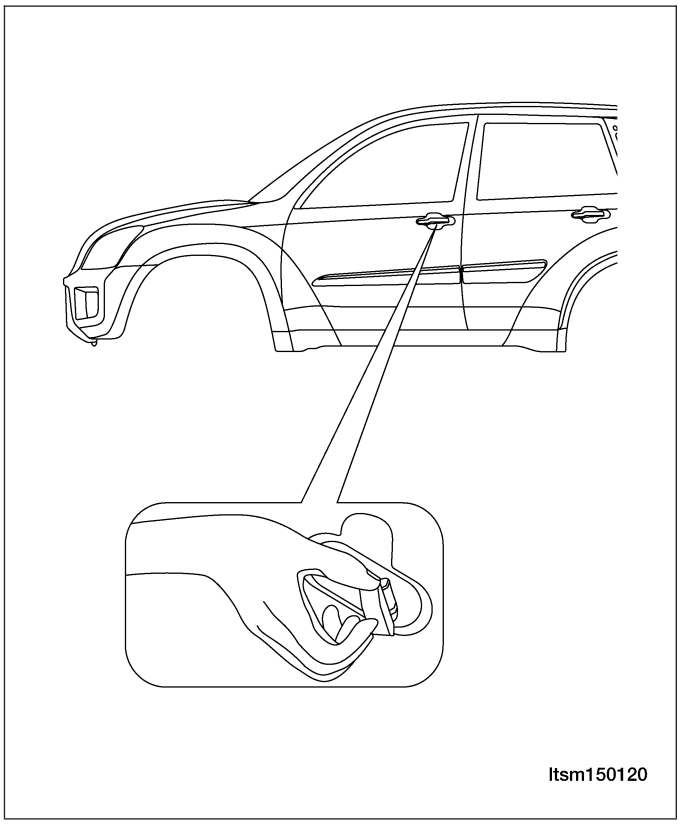

Assembly

Assemble is in the reverse order of disassembly

Front Door Adjustment

1. Adjust the door gap with a spacer gauge.
   - The gap of the upper section between the front door and the back door should be 5.5 ± 0.7 mm
   - The gap of the outboard side should be 5.5 ± 0.7 mm
   - The gap between the front door and pole A should be 6.5 ± 1 mm
   - The gap of upper section between front door and back door should be 5.5 ± 0.7 mm
   - The gap between the front/back door and the doorsill should be 6 ± 1 mm
   - The overall levelness when measured with a magnet should be 0-0.5 mm
2. Install the bolts (Part Number: T11-6101103, 2 pcs both upper and lower) into the body for 2-3 turns, tighten with pneumatic wrench. Torque: 35 ± 3 N·m.

Check for the following after repair:

- Any scratches from reassembly
- Whether the bolts and nuts are assembled properly
- Whether the bolts and nuts are properly tightened
- Whether the gap and levelness between front door and back door is within the specifications
- Whether the edge height is 0-0.5 mm.

Replacing Front Door Hinge

1. Remove the front fender to gain access to the door hinge (See Fender Removal & Installation in Section 15 Body & Accessories).
2. Support the door.
3. Remove the four retaining bolts from the upper and lower hinges, and then remove the hinges.

Downloaded from www.Manualslib.com manuals search engine

Rear Door

Removal & Installation

1. Disconnect the negative battery cable.
2. Disconnect the inner electrical harness connector on the rear door.
3. Remove the mounting bolts (1) from the rear door hinge.
4. Remove the rear door assembly.
5. Installation is in the reverse order of removal.

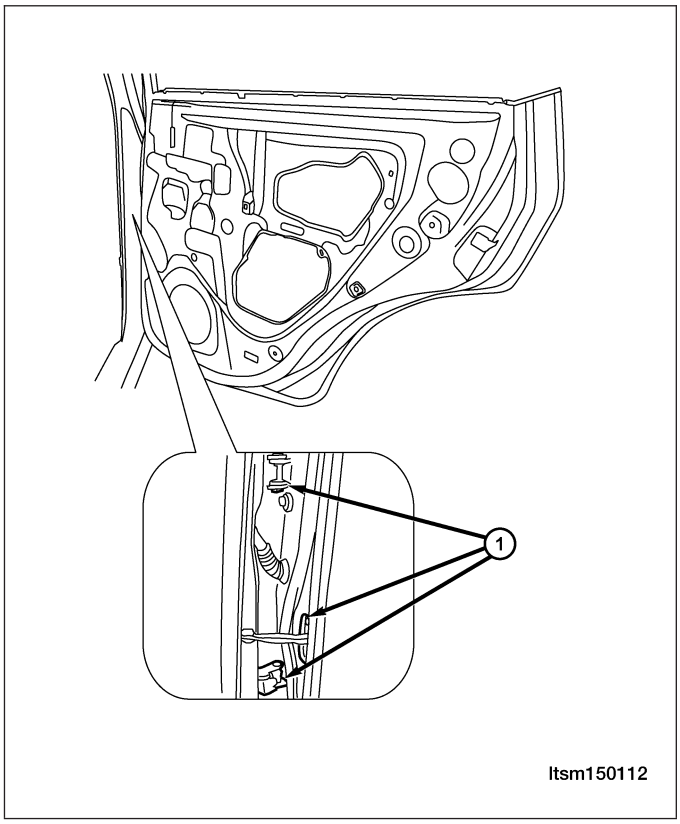

Disassembly

1. Remove the bolts to remove the bezel for the inside door handle.
2. Pry out the window regulator switch and pull out the electrical harness.
3. Remove the door trim panel.
4. Remove the mounting bolts for the inside door handle to remove the handle.
5. Remove the protective film from the rear door.
6. Lower the glass to a proper position, remove the set bolts, move the glass to the bottom of the door, and then remove the door glass.
7. Remove the mounting bolts for the glass guide rail.

Downloaded from www.Manualslib.com manuals search engine

8. Remove the mounting bolts (1) from the window regulator.
9. Remove the lock mounting screws with an internal spline socket.
10. Loosen the pull rod from the door handle, pull out the electrical harness, and then remove the lock.
11. Remove the rear door outside handle.
    - Remove the mounting bolts of the handle seat with hexagon spline wrench from one side of the shield.

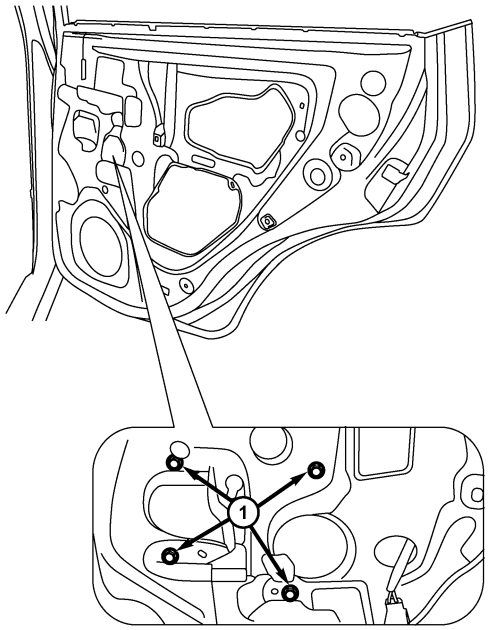

ltsm150118

12. Remove the handle seat.
    - Remove the outside handle.
13. Remove the weather strip from the door opening.
14. Disconnect the inner harness of the door from outside.

Assembly

Assemble in the reverse order of disassembly.

Rear Door Adjustment

1. Adjust the door gap with a spacer gauge.
    - The gap between the rear door and the triangle window should be 8 ± 1.5 mm
    - The gap between the rear door and the side fender should be 6 ± 1 mm
    - The gap between the rear door and the doorsill should be 6 ± 1 mm
    - The overall levelness when measured with a magnet should be 0-0.5 mm as shown by the arrow
2. Install the nuts (Part Number: Q32008, 2 pcs both upper and lower) into the body for 2-3 turns, tighten with pneumatic wrench. Torque: 35 ± 3 N·m.

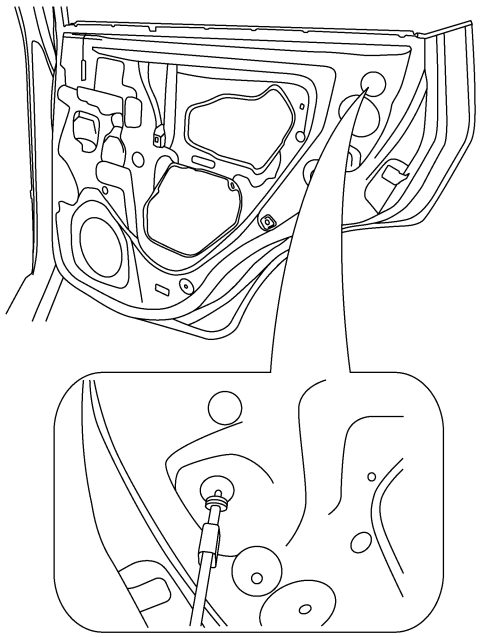

ltsm150119

Check for the following after repair:

- Any scratches from reassembly
- Whether the bolts and nuts are assembled properly
- Whether the bolts and nuts are properly tightened
- Whether the gap between rear door and side fender and the levelness are within the specifications
- Whether the edge of back door is 0-0.5 mm higher than the side fender.

Downloaded from www.Manualslib.com manuals search engine

Replacing Rear Door Hinge

1. Remove the door check bolts.
2. Support the door.
3. Remove the four retaining bolts from the upper and lower hinges, and then remove the hinges.

Back Cargo Door

Removal & Installation

1. Remove the two back cargo door bolts connecting the back door and hinge.
   (Tighten: Bolts connecting the back door and hinge to 50 ± 5 N·m)
   (Tighten: Bolts connecting the hinge and body to 36 ± 4 N·m)
2. Disconnect the wiring harness electrical connector.
3. Remove the two mounting bolts (1) of the back cargo door stopper on body.
   (Tighten: Bolts connecting the back cargo door stopper bracket and body to 27 N·m)
4. Remove the back cargo door.
5. Installation is in the reverse order of removal.

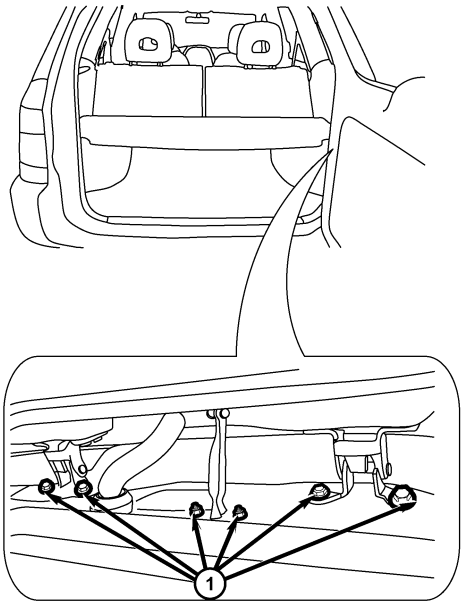

ltsm150113

Disassembly

1. Remove the back cargo door panel.
2. Remove the rear wiper motor (See Rear Wiper Motor Removal & Installation in Section 15 Body & Accessories).
3. Remove the protective film from the back cargo door.
4. Remove mounting bolts, pull out the harness.
5. Remove the outside handle mounting bolts (1) from one side of the door panel.

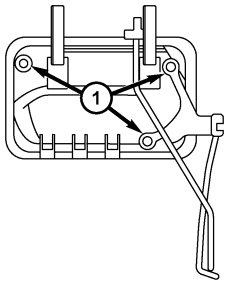

ltsm150121

15

Downloaded from www.Manualslib.com manuals search engine

6. Remove the rod from the door handle from the door lock body, remove the outer handle of back cargo door.
7. Remove the back cargo door lock.

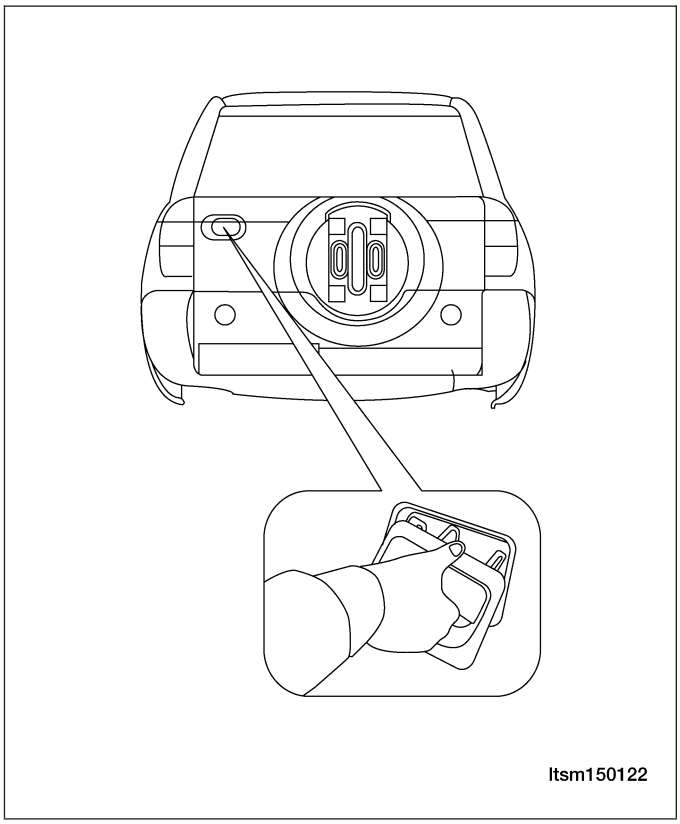

8. Pull out the connector for the wiring harness.
9. Remove the lock.
10. Remove the high mounted stop lamp assembly (1).

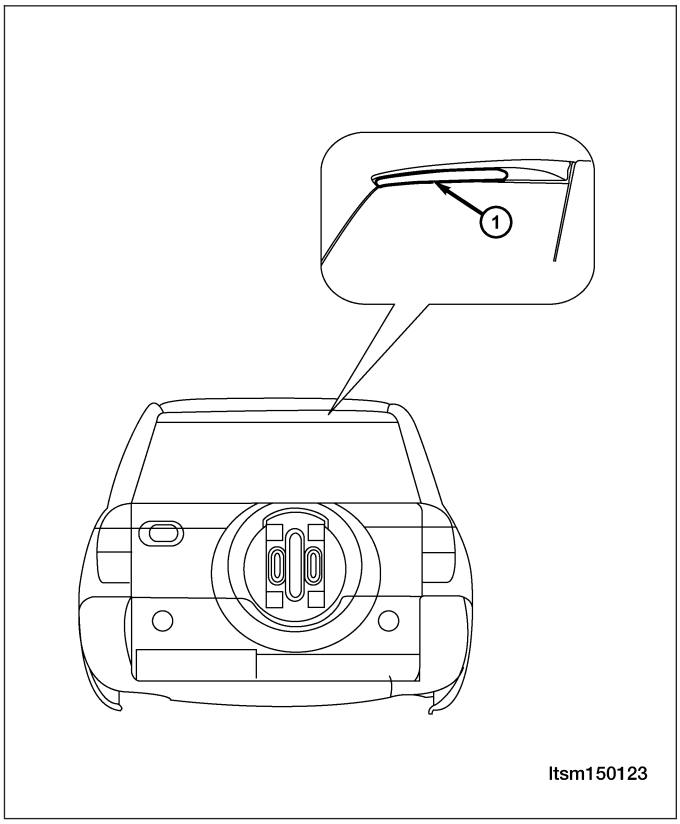

11. Remove the rear fog lamp assembly.
12. Remove the spare tire support.

Downloaded from www.Manualslib.com manuals search engine

Assembly

Assembly is in the reverse order of disassembly.

Back Cargo Door Adjustment

1. Adjust the door gap with a spacer gauge.
   - The gap between the back cargo door and the upper part of the side fender should be 5.8 ± 1 mm
   - The gap between the back cargo door and the middle part of the side fender should be 6.4 ± 1 mm
   - The gap between the back cargo door and the tail lamp should be 6.2 ± 1 mm
   - The gap between the rear and head cover should be 9.3 ± 1.5 mm
   - The overall levelness when measured with a magnet should be 0-0.5 mm
2. Install the nuts (Part Number: T11-6301011, 2 pcs both upper and lower) into the body for 2-3 turns, tighten with pneumatic wrench. Torque: 50 ± 3 N·m.

Check for the following after repair:

- Any scratches from reassembly
- Whether the bolts and nuts are assembled properly
- Whether the bolts and nuts are properly tightened
- Whether the gap and levelness between back cargo door and side fenders are within the specifications

Replacing Rear Door Hinge

1. Remove the door check bolts.
2. Support the door.
3. Remove the four retaining bolts from the upper and lower hinges, and then remove the hinges.

Downloaded from www.Manualslib.com manuals search engine

EXTERIOR LAMPS

Description

The exterior lamps consist of the following:
- Headlamps
- Rear Combination Lamps
- Side Repeater Lamps
- Fog Lamps
- Stop Lamps
- Backup Lamps

Operation

- Front Combination Lamp: With the light switch in the 2nd position, the Body Control Module (BCM) receives input requesting head lamp operation. The BCM then supplies power to the head lamps.
- Turn Signal Lamp: When the turn signal switch is in LH or RH position with the ignition switch in the ON position, the FBCM detects the RH or LH turn signal request. The BCM supplies power to the respective turn signal lamp.
- Hazard Lamp: When the hazard switch is in the ON position, the BCM detects the hazard switch signal. The BCM outputs the flasher signal (right and left). The BCM then activates the hazard indicator and audible buzzer.
- Fog Lamp: When the front/rear fog lamp switch is in the ON position and also the light switch is in the 1st or 2nd position. The BCM receives input requesting fog lamp operation. The BCM then supplies power to the fog lamps.
- Stop Lamp: When the brake pedal is applied, the stop lamp switch sends the signal to the RBCM. The RBCM then supplies power to the stop lamps.
- Backup Lamp: When the BCM receives the signal from the backup lamp switch, then the BCM supplies power to the backup lamp.

Specification

Torque Specifications

DESCRIPTION	TORQUE (N·m)
Front Combination Lamp Mounting Bolts	6 ± 1
Front Fog Lamp Mounting Bolts	2.0 ± 0.2
Rear Combination Lamp Mounting Bolts	5 ± 1
Front Ceiling Lamp Mounting Screws	2 ± 0.5
Rear Ceiling Lamp Mounting Screws	3 ± 0.5
High-Mounted Stop Lamp Mounting Screws	3 ± 0.5

Downloaded from www.Manualslib.com manuals search engine

Electrical Schematics

Headlamp Aiming System (Page 1 of 2)

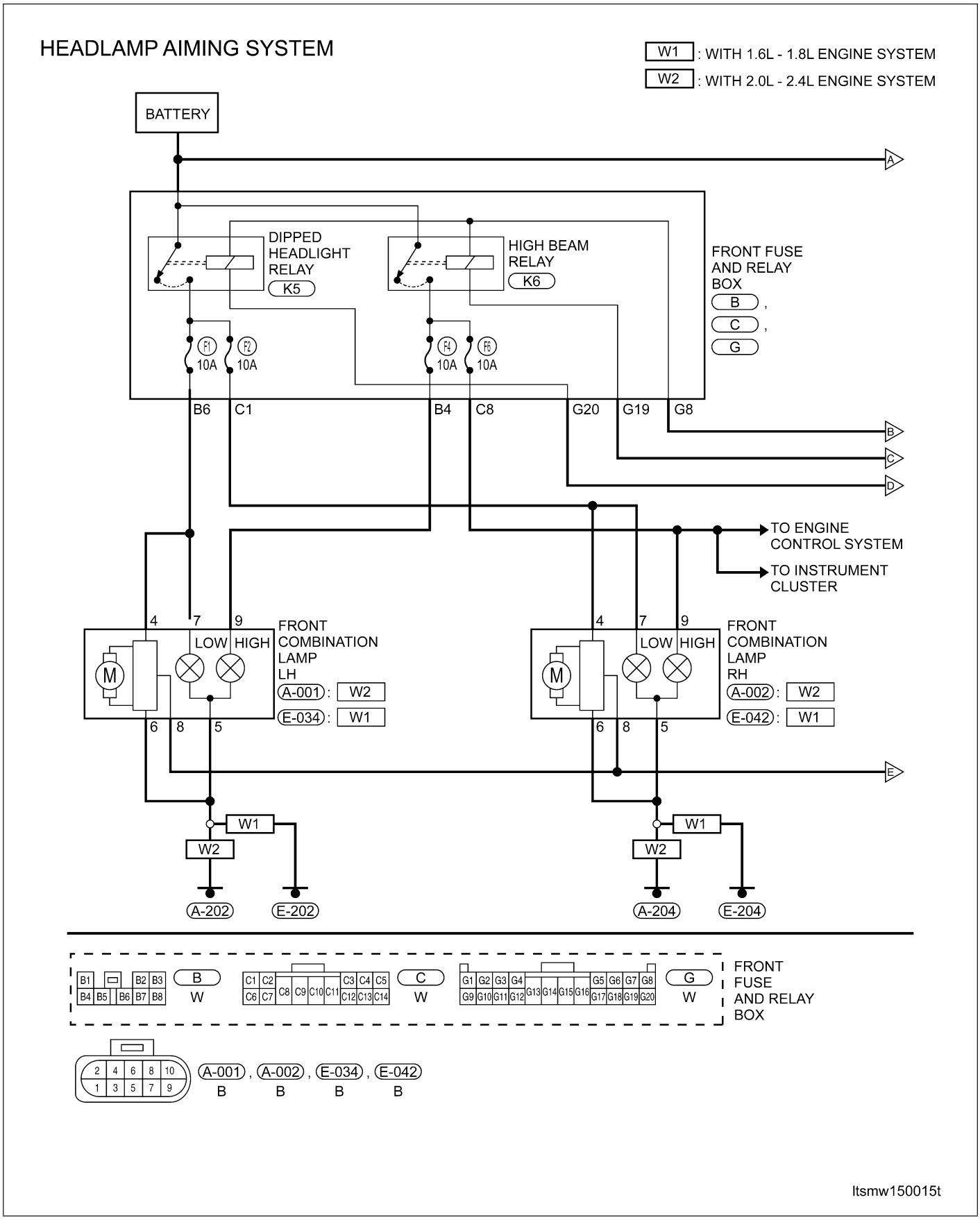

Downloaded from www.Manualslib.com manuals search engine

Headlamp Aiming System (Page 2 of 2)

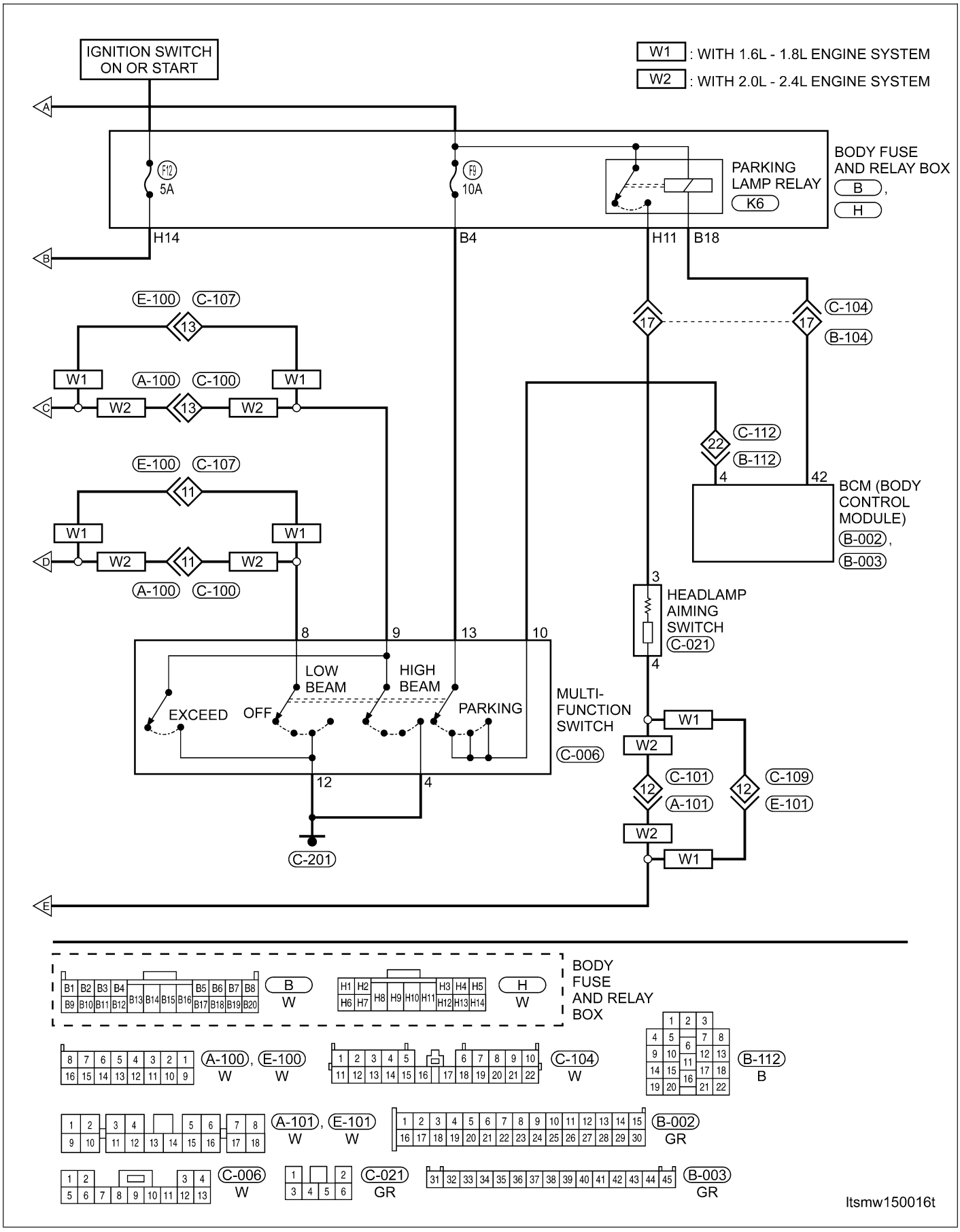

Downloaded from www.Manualslib.com manuals search engine

Parking, License Plate and Tail Lamps (Page 1 of 2)

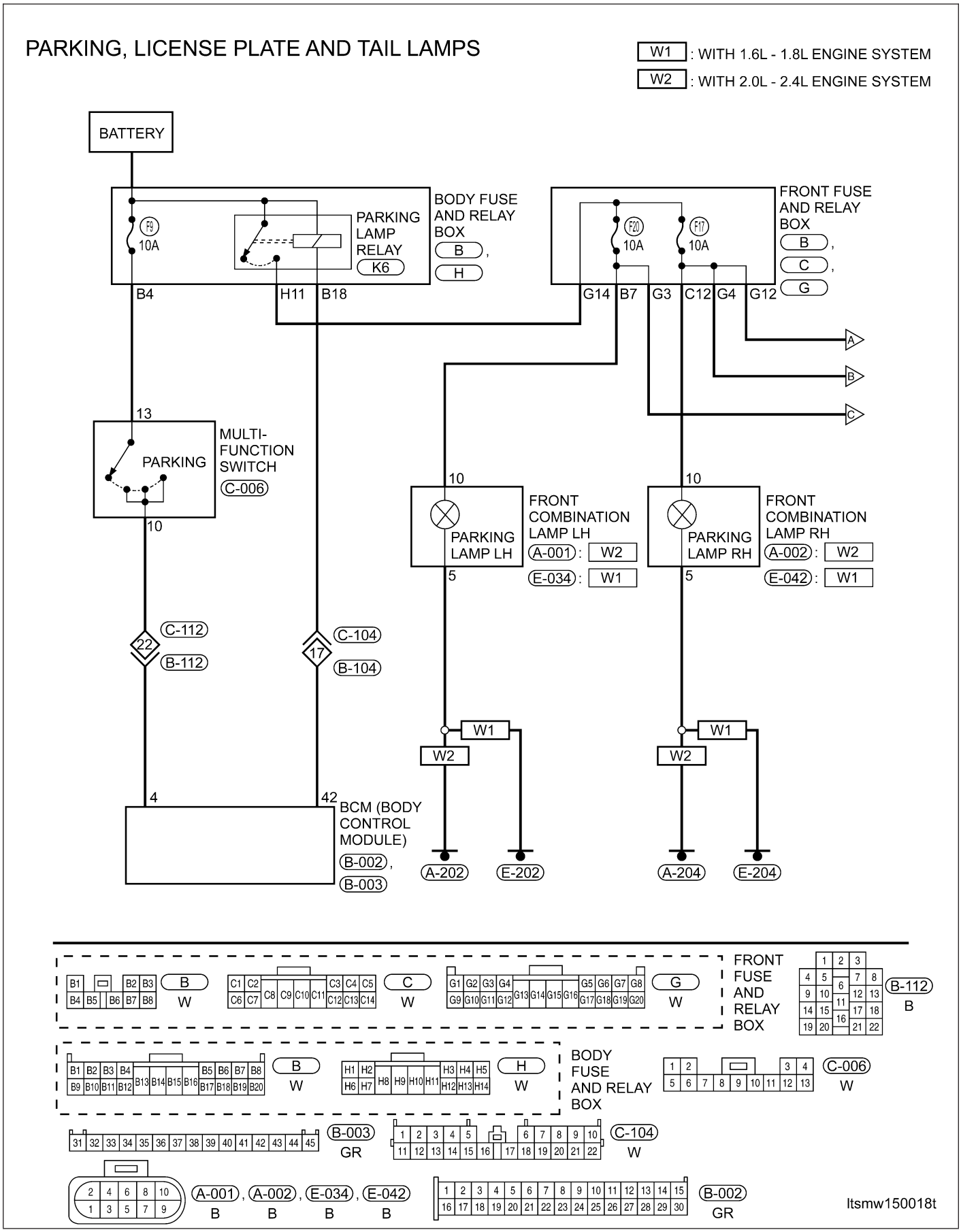

15

Downloaded from www.Manualslib.com manuals search engine

Parking, License Plate and Tail Lamps (Page 2 of 2)

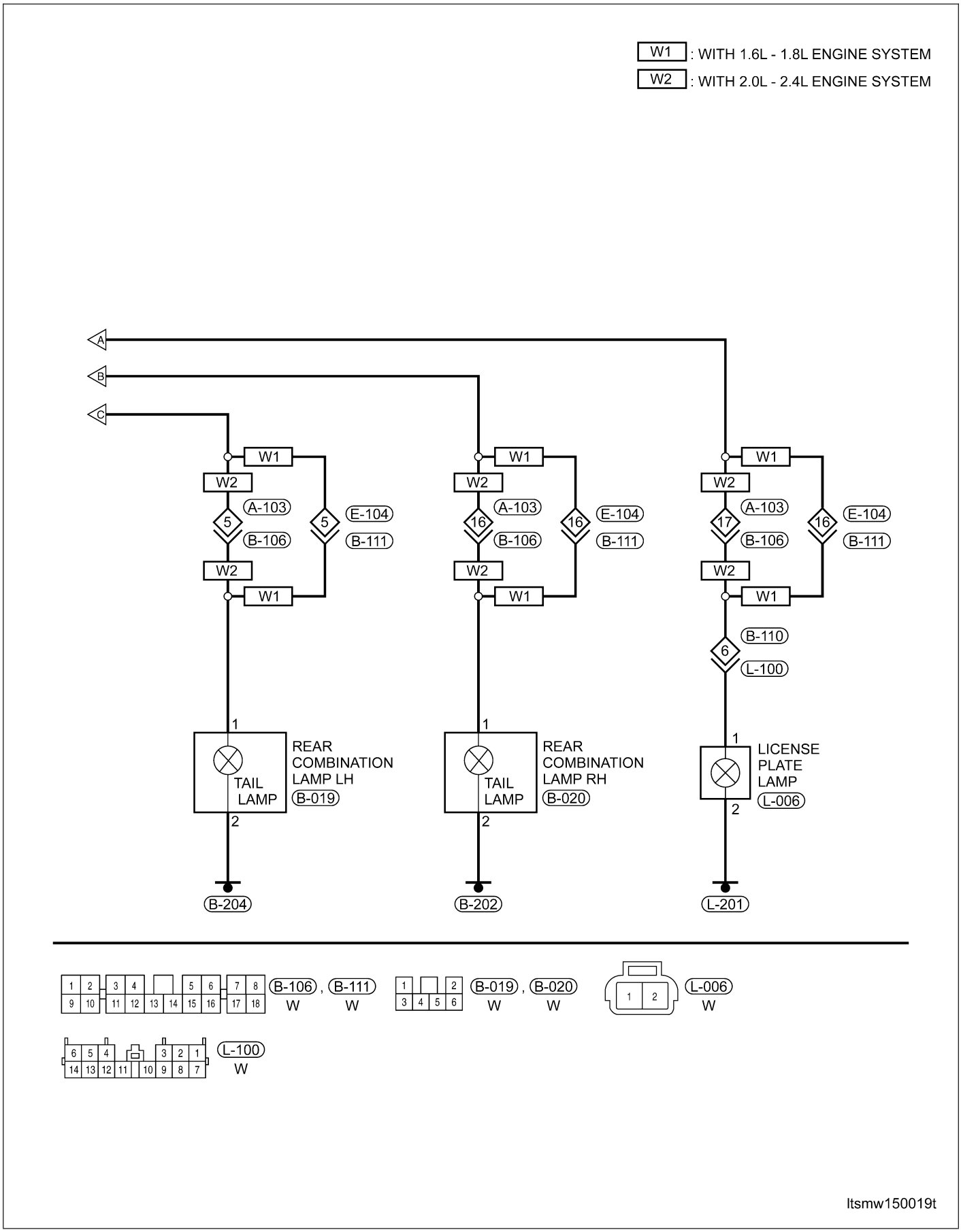

Downloaded from www.Manualslib.com manuals search engine

Fog Lamps (Page 1 of 2)

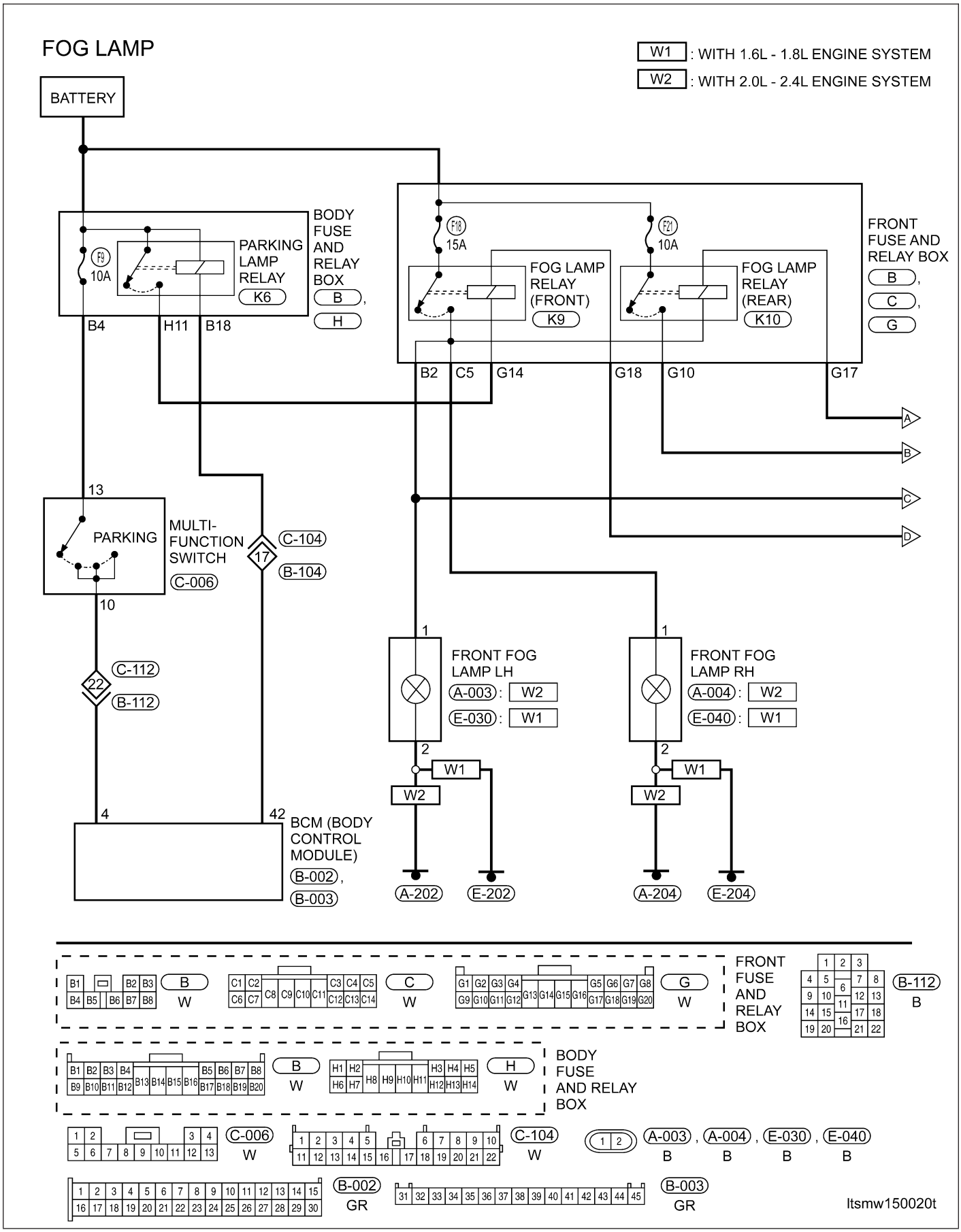

Downloaded from www.Manualslib.com manuals search engine

Fog Lamps (Page 2 of 2)

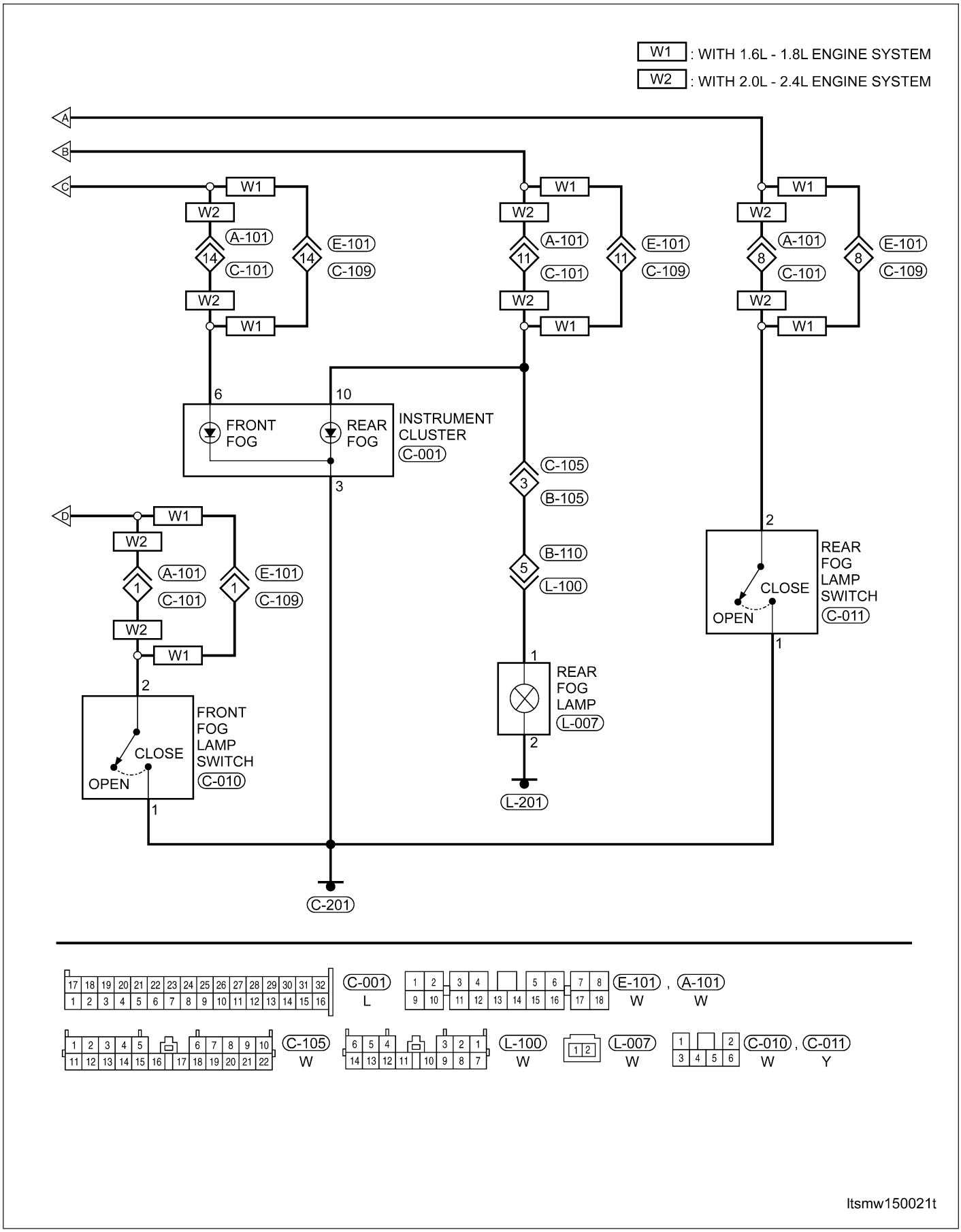

Downloaded from www.Manualslib.com manuals search engine

Side Turn Signal and Hazard Warning Lamps (Page 1 of 2)

TURN SIGNAL AND HAZARD WARNING LAMPS

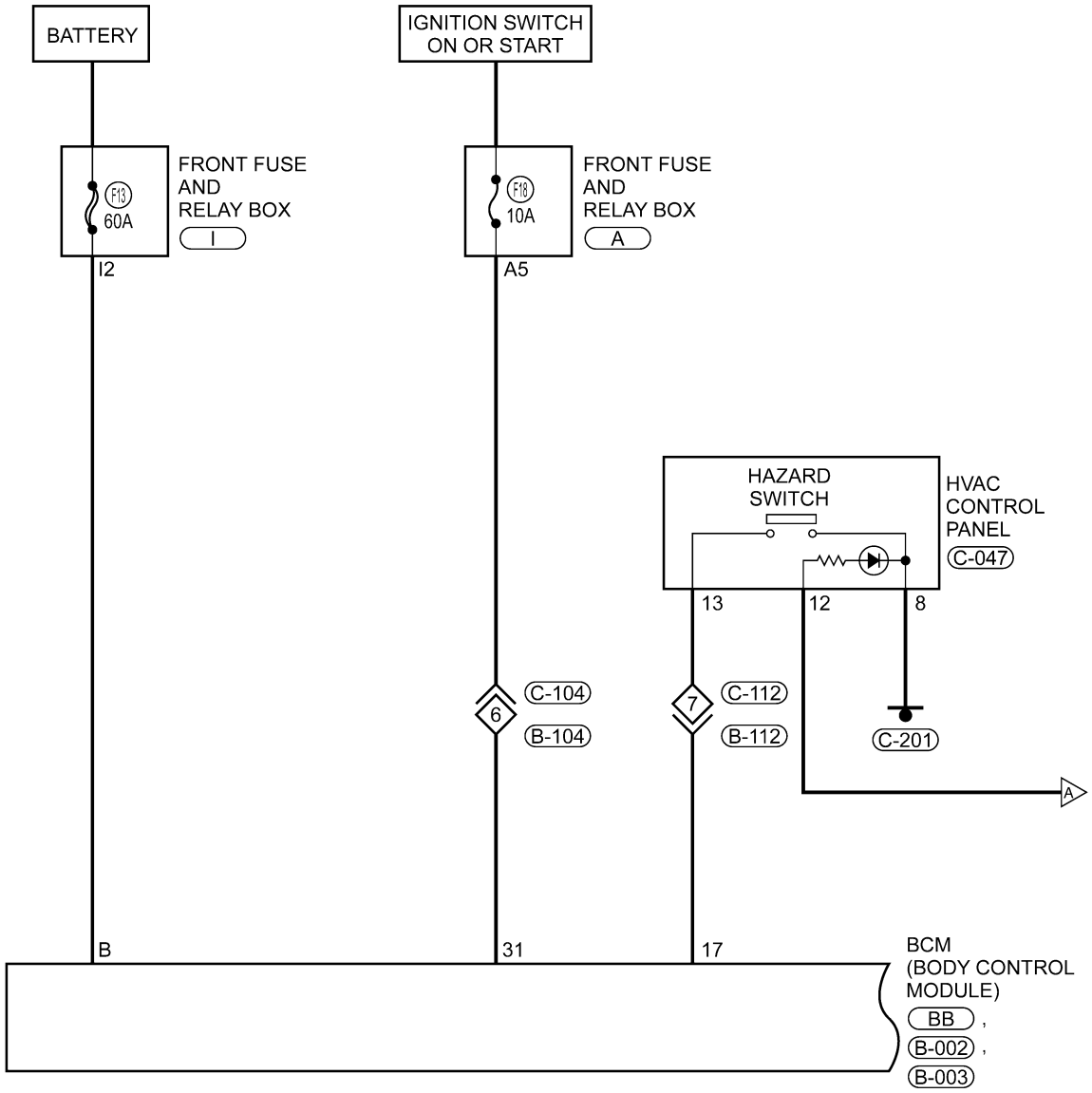

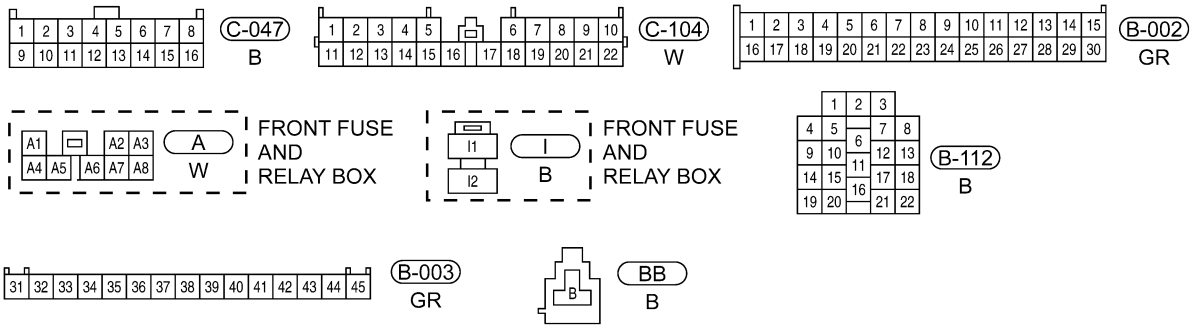

ltsmw150022t

Downloaded from www.Manualslib.com manuals search engine

Turn Signal and Hazard Warning Lamps (Page 2 of 2)

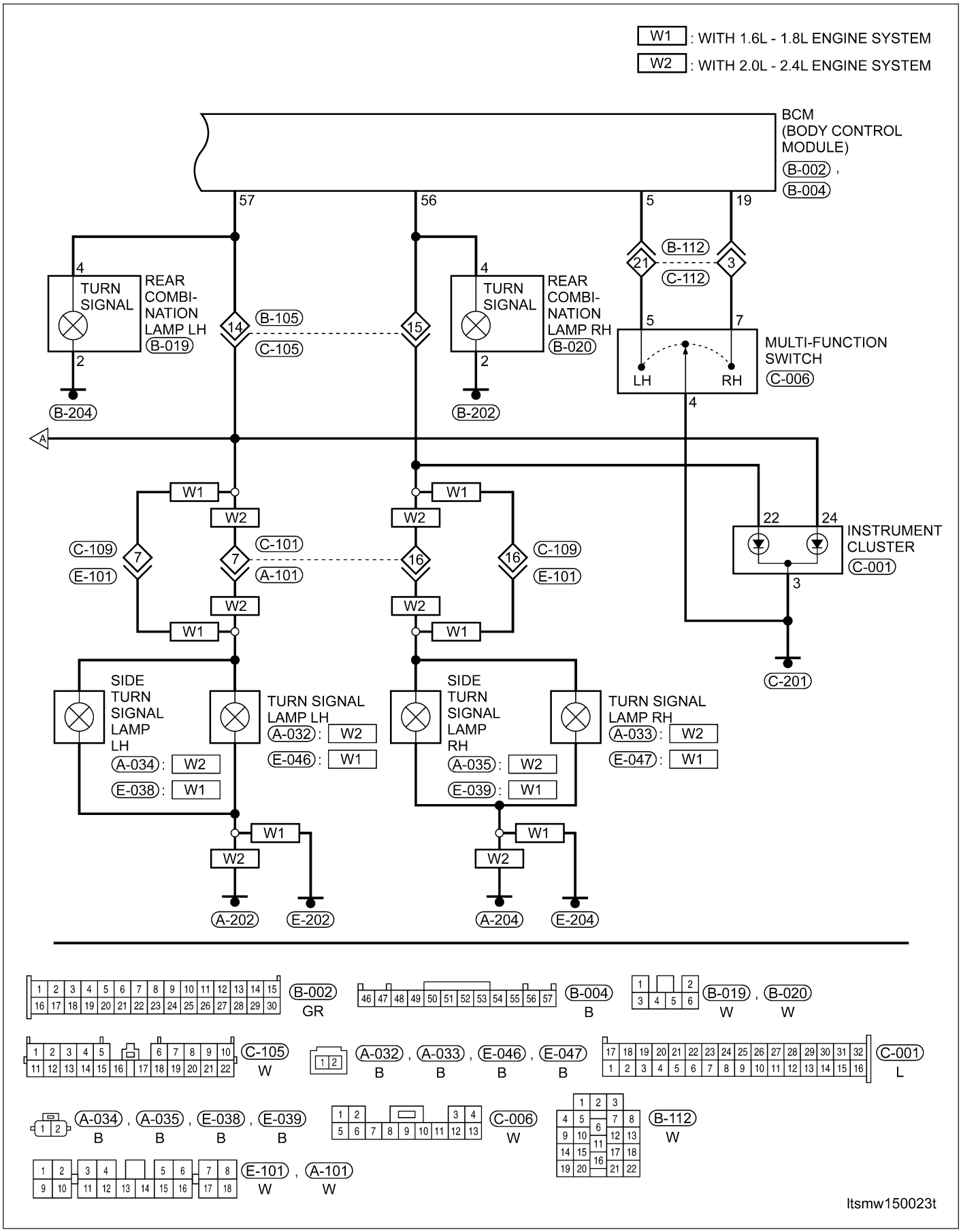

Downloaded from www.Manualslib.com manuals search engine

Stop Lamps (Page 1 of 1)

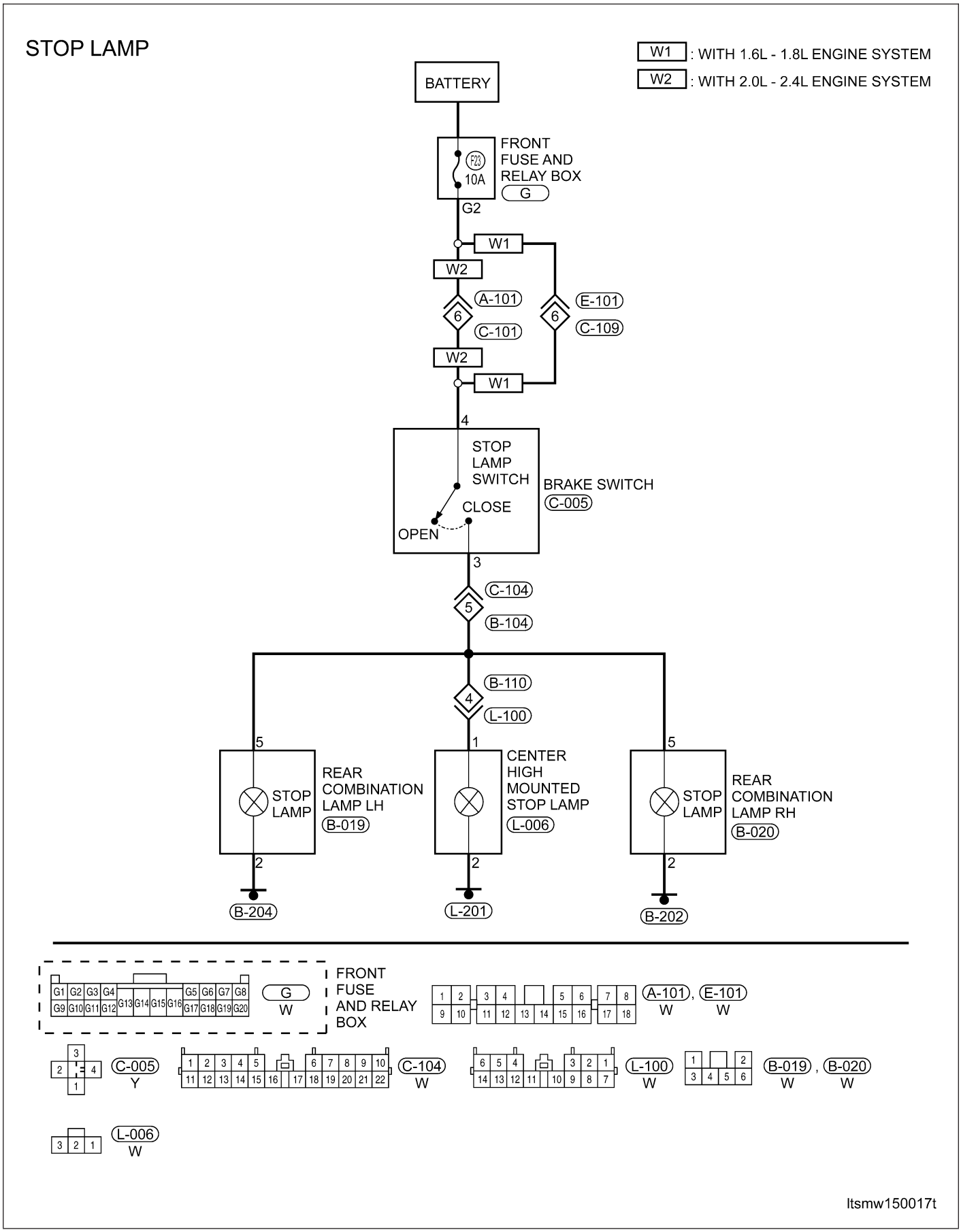

15

Downloaded from www.Manualslib.com manuals search engine

Backup Lamp (Page 1 of 1)

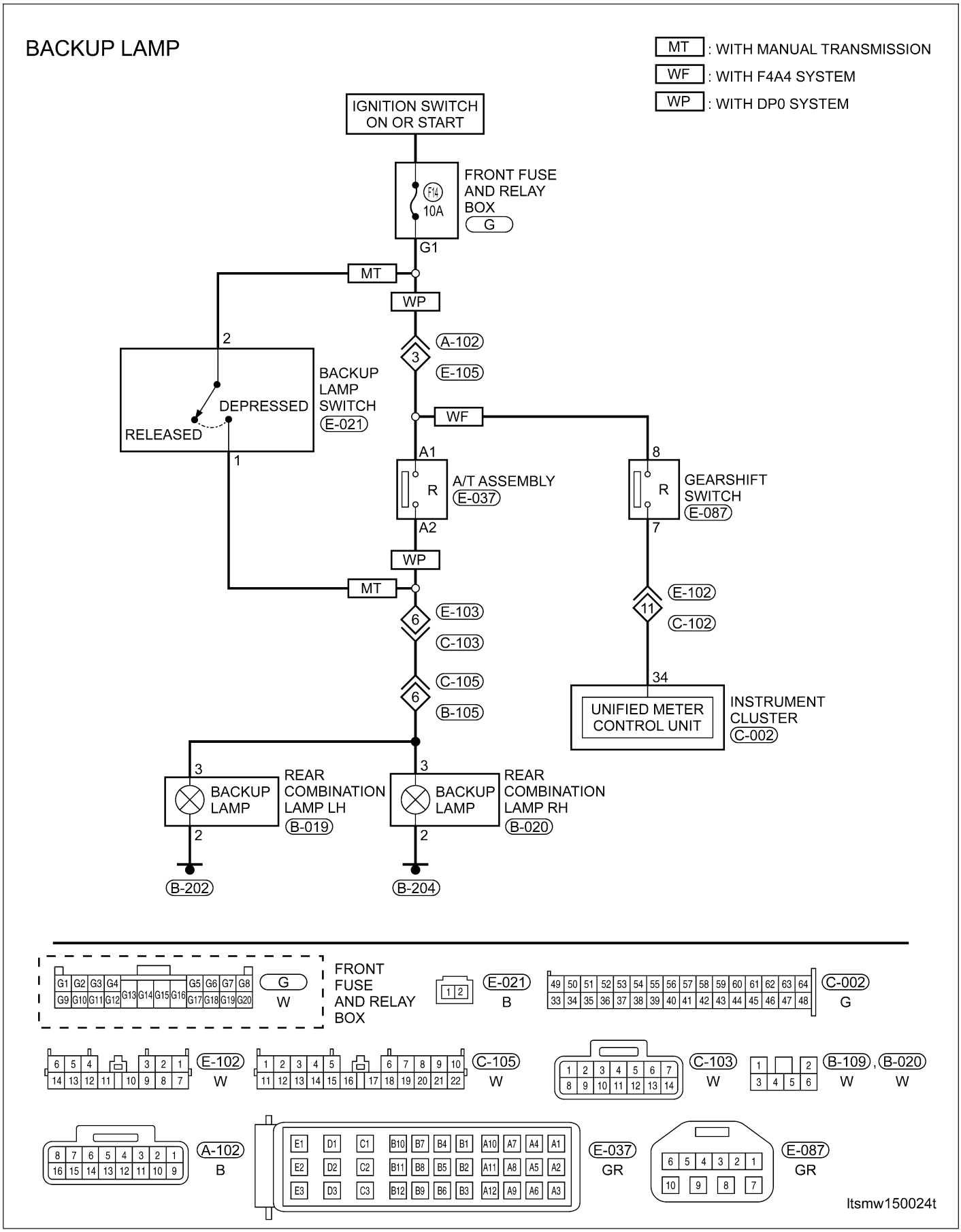

Downloaded from www.Manualslib.com manuals search engine

Front Combination Lamp Assembly

Removal & Installation

1. Open the hood.
2. Disconnect the turn signal lamp.
3. Disconnect the high/low beam front combination lamp.
4. Remove the three front combination lamp assembly mounting bolts (1).

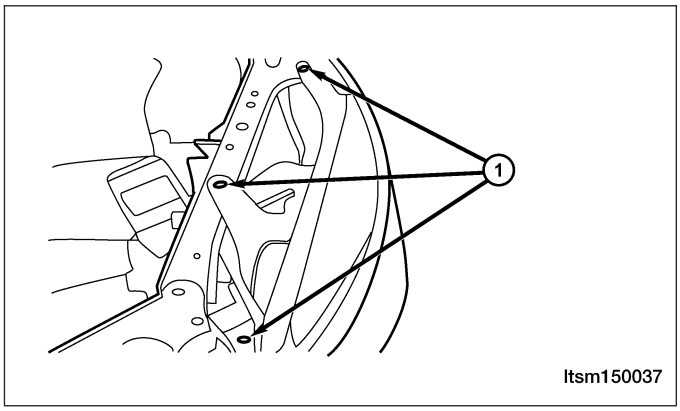

5. Carefully remove the front combination lamp assembly.
6. Installation is in the reverse order of removal.

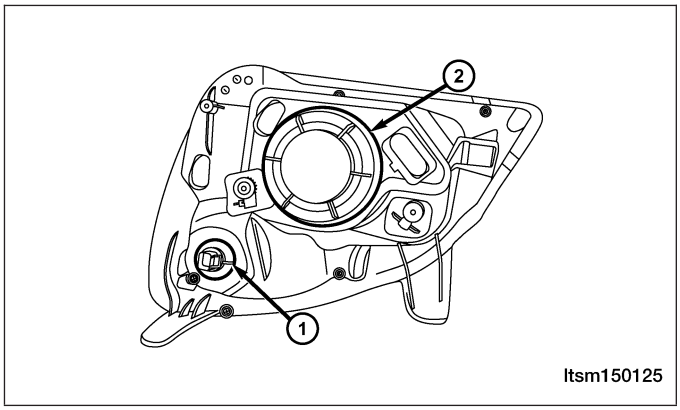

1	Turn Signal Lamp Bulb	12 V (21 W)
2	Headlamp Bulb Front Position Lamp Bulb	12 V (55 W) 12 V (5 W)

Downloaded from www.Manualslib.com manuals search engine

Headlamp Adjustment Procedure

NOTE :
Follow all local laws and regulations and verify the following items before adjustment:

1. Check the following before starting the headlamp adjustment procedure:
   - All tires are filled to the proper tire pressure.
   - The vehicle is unloaded (except for spare tire and tools, and include driver's weight for sedan).
   - The vehicle should be parked on a level surface.
   - The headlights are clean.
   - The headlights are working properly.
2. Park the vehicle on a level surface approximately 10 meters from the vertical wall or screen directly in front of it.
   NOTE: The vertical wall or screen must be a minimum of 2.4 meters wide.
3. Use a screwdriver into the two adjustment holes (1) to adjust the headlamp to proper specifications.

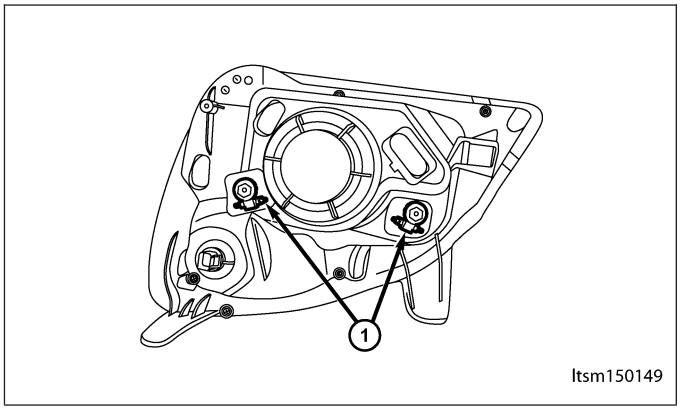

Rear Combination Lamp Assembly

Removal & Installation

1. Open the back cargo door.
2. Remove the lower C-pillar trim (See Lower C-Pillar Removal & Installation in Section 15 Body & Accessories).
3. Remove three mounting nuts (1) from the body.

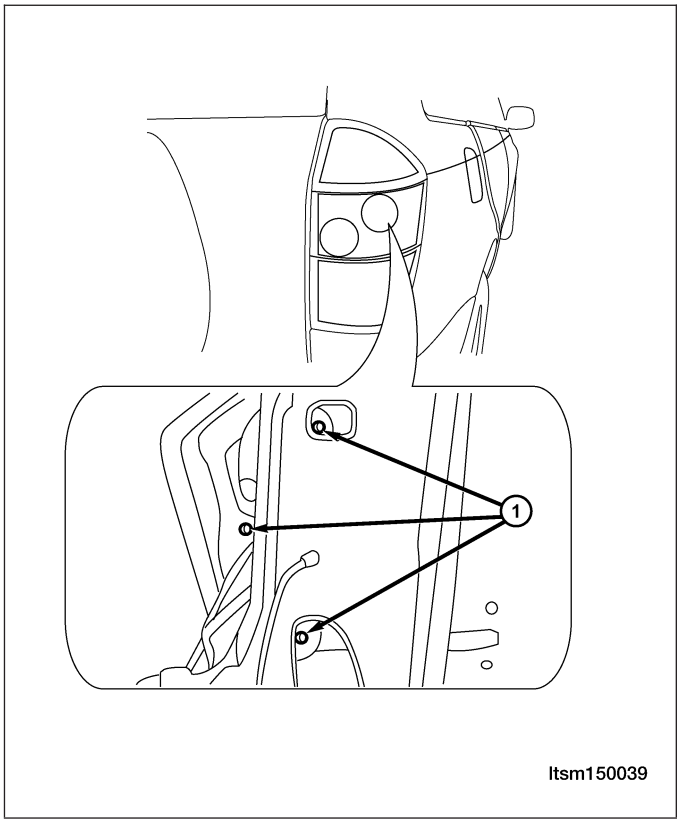

Downloaded from www.Manualslib.com manuals search engine

4. Disconnect the rear combination lamp.
5. Carefully remove the rear combination lamp assembly.
6. Installation is in the reverse order of removal.

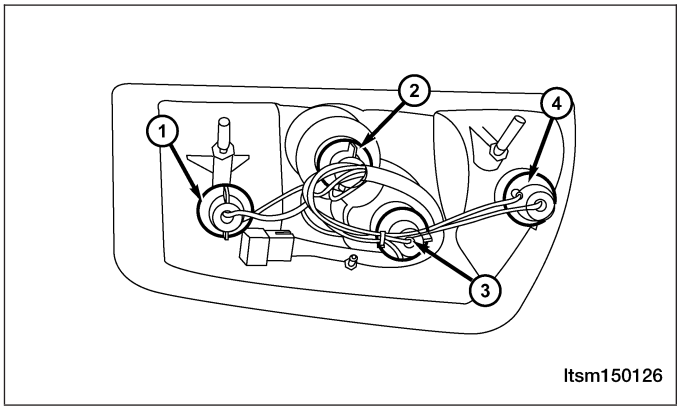

1	Tail Lamp Bulb	12 V (21 W)
2	Backup Lamp Bulb	12 V (21 W)
3	Rear Turn Signal Lamp Bulb	12 V (21 W)
4	Stop Lamp Bulb	12 V (21 W)

Headlamp

Removal & Installation

1. Remove the front combination lamp assembly (See Front Combination Lamp Assembly Removal & Installation in Section 15 Body & Accessories).
2. Remove the headlamp bulb cover.
3. Disconnect the headlamp bulb electrical connector.
4. Remove the headlamp bulb clip.

Downloaded from www.Manualslib.com manuals search engine

5. Carefully remove the bulb (1) for the high/low beam headlamp.
6. Replace the bulb with a new bulb as needed.
7. Installation is in the reverse order of removal.

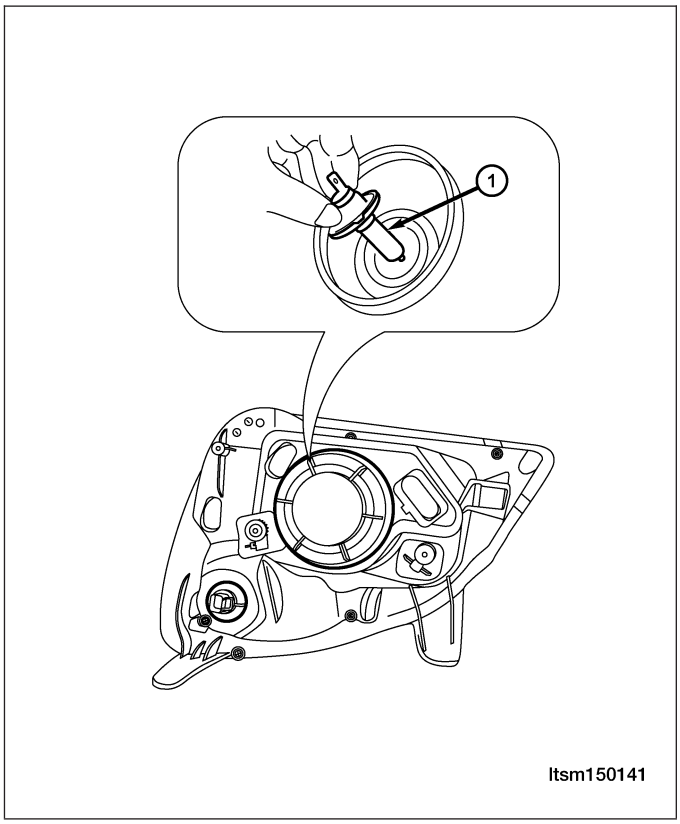

Front Fog Lamp

Removal & Installation

1. Remove the front bumper (See Front Bumper Removal & Installation in Section 15 Body & Accessories).
2. Disconnect the fog lamp.
3. Remove three mounting nuts (1).

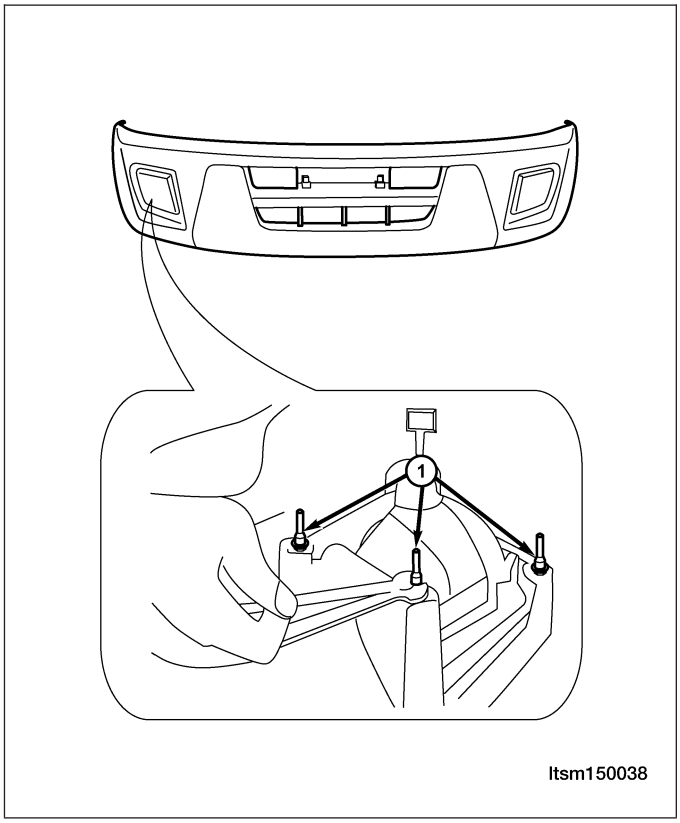

Downloaded from www.Manualslib.com manuals search engine

4. Replace the bulb with a new bulb (1) as needed.
5. Installation is in the reverse order of removal.

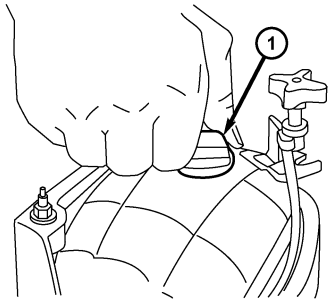

ltsm150143

Rear Fog Lamp

Removal & Installation

1. Remove the cover of the back cargo door.
2. Remove the rear fog lamp mounting screws (1).
3. Remove the rear fog lamp.
4. Disconnect the electrical connector for the rear fog lamp.
5. Installation is in the reverse order of removal.

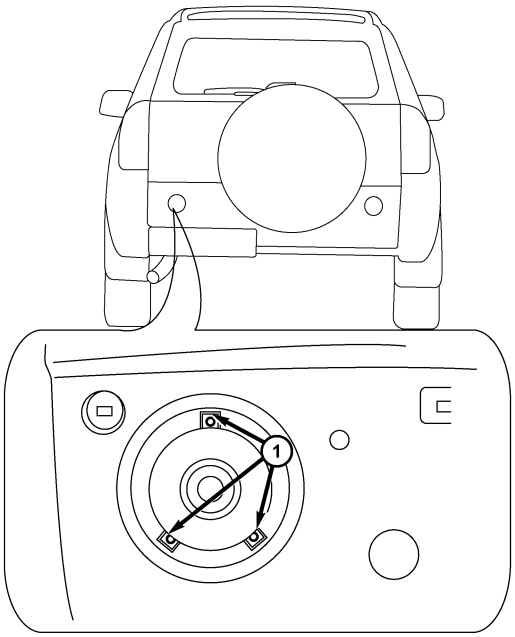

ltsm150082

Downloaded from www.Manualslib.com manuals search engine

Tail/Backup/Stop Lamp

Removal & Installation

1. Open the plug cover of storage box at rear luggage cabin.
2. Use a trim stick and remove the internal protective cover (1).

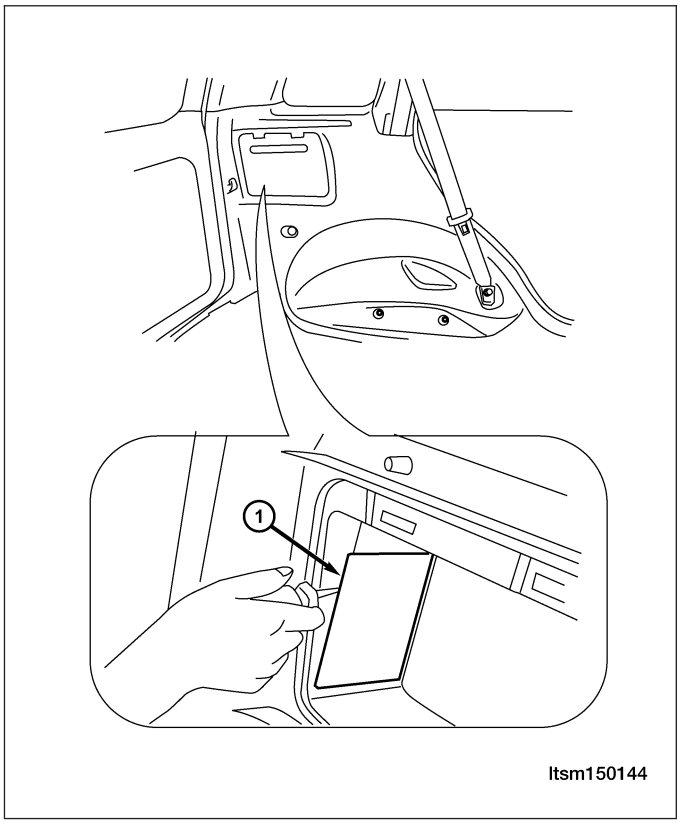

3. Remove the bulbs for tail/backup/stop lamps by hand through the access hole.
4. Replace the bulb with a new bulb as needed.
5. Installation is in the reverse order of removal.

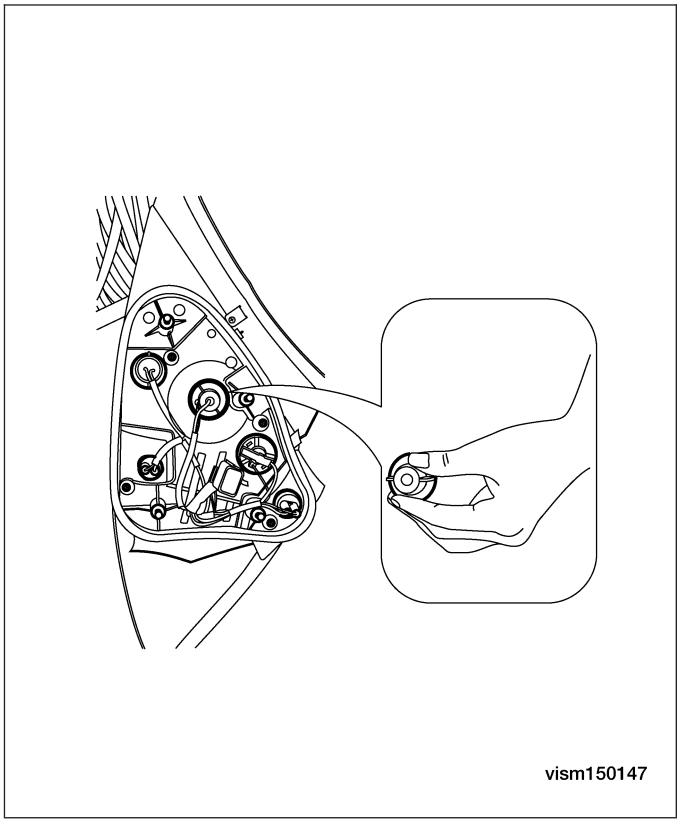

Downloaded from www.Manualslib.com manuals search engine

Turn Signal Lamp

Removal & Installation

1. Remove the front combination lamp (See Front Combination Lamp Removal & Installation in Section 15 Body & Accessories).
2. Replace the front turn signal lamp bulb (1).

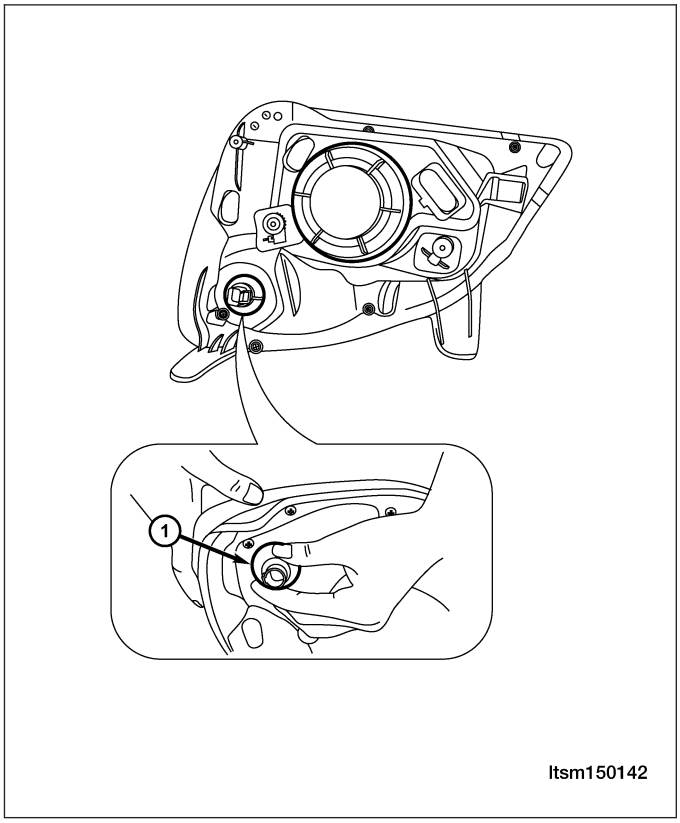

3. Remove the rear combination lamp (See Rear Combination Lamp Removal & Installation in Section 15 Body & Accessories).

Downloaded from www.Manualslib.com manuals search engine

4. Replace the rear turn signal lamp bulb.

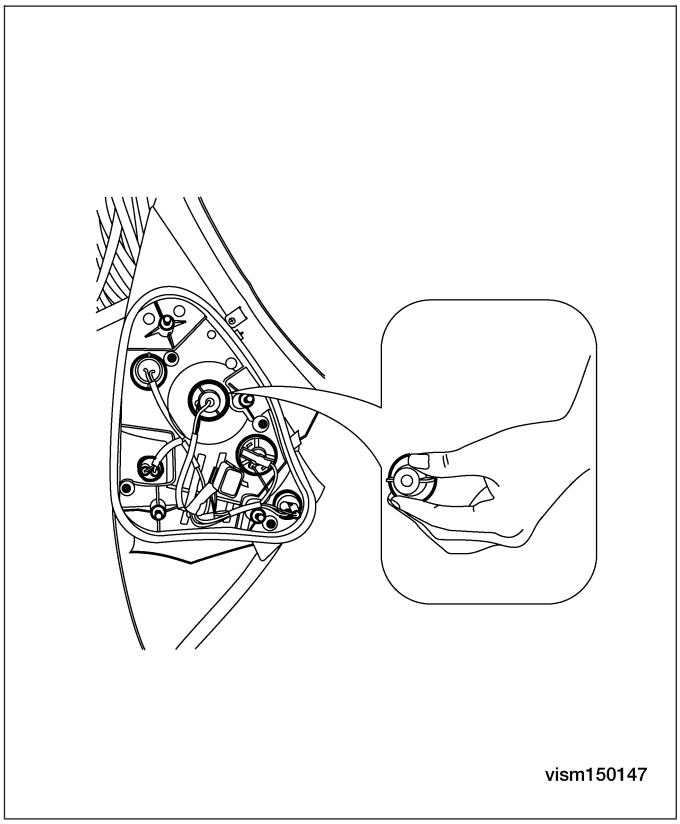

5. Hold the side turn signal lamp by hand and pull back and remove the lamp slowly.
6. Disconnect the side turn signal lamp connector (1).

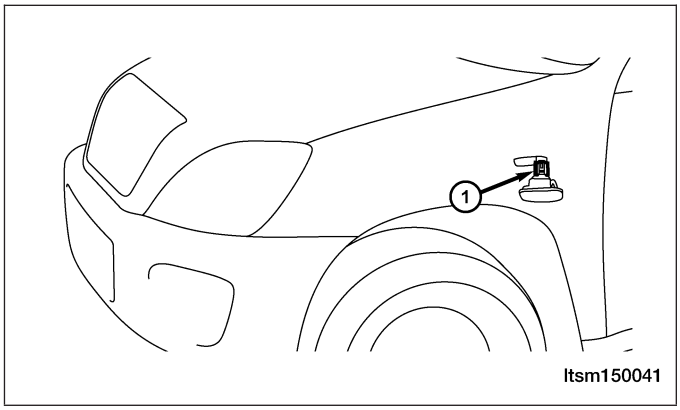

7. Remove the side turn signal lamp assembly.
8. Replace the bulb with a new bulb as needed.
9. Installation is in the reverse order of removal.

Downloaded from www.Manualslib.com manuals search engine

High Mounted Stop Lamp

Removal & Installation

1. Remove the high mounted stop lamp cover (1).
2. Remove the high mounted stop lamp mounting screws (2).
3. Disconnect the electrical connector (3) of the high mounted stop lamp.

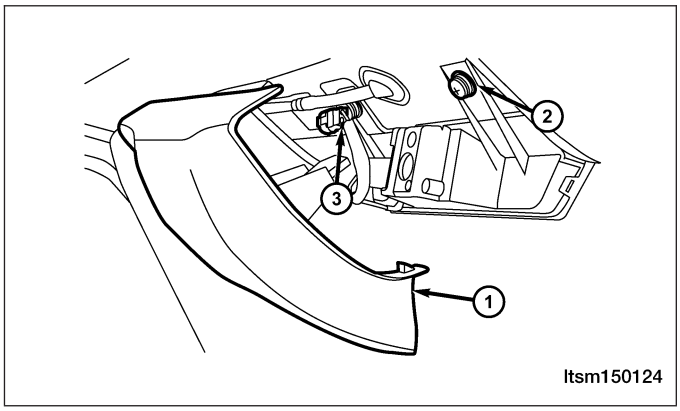

4. Remove the high mounted stop lamp assembly.
5. Replace the bulb with a new bulb as needed.
6. Installation is in the reverse order of removal.

License Plate Lamp

Removal & Installation

1. Press the release tab with a flat screwdriver, remove the license plate lamp.

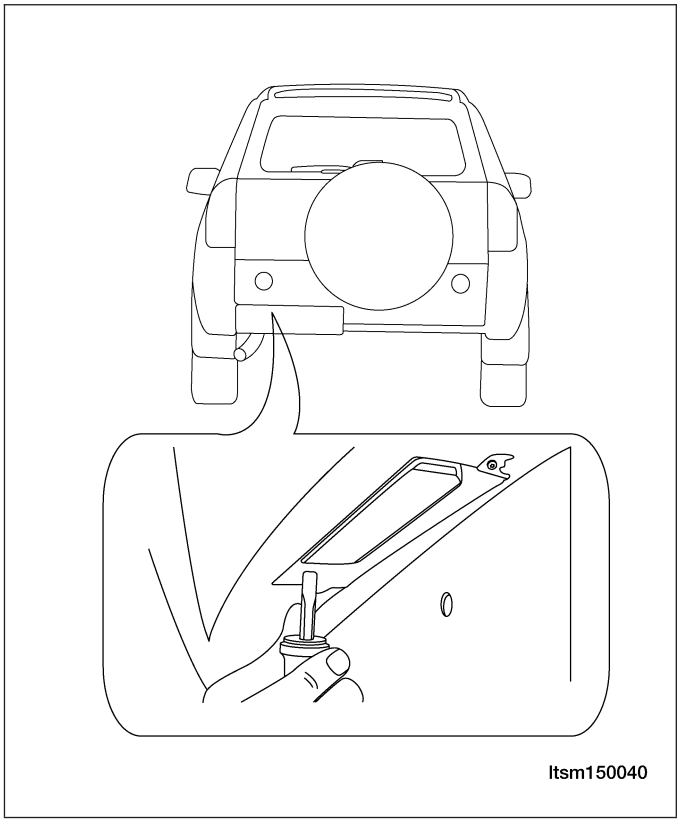

2. Disconnect the license plate lamp electrical connector.

Downloaded from www.Manualslib.com manuals search engine

3. Replace the bulb with a new bulb (1) as needed.

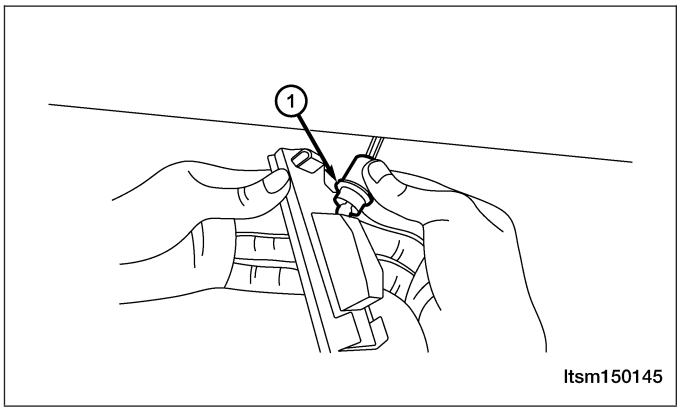

4. Installation is in the reverse order of removal.

Downloaded from www.Manualslib.com manuals search engine

FENDER

Front Fender

Removal & Installation

1. Remove the mounting bolts (1) as shown.
2. Remove the front fender.
3. Installation is in the reverse order of removal.

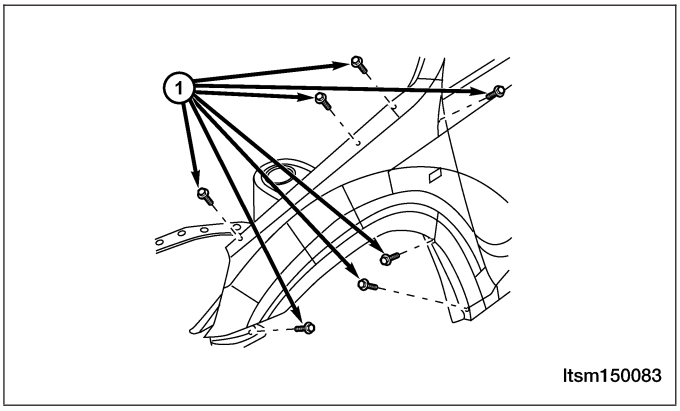

15

Downloaded from www.Manualslib.com manuals search engine

FUEL DOOR

Fuel Door

Removal & Installation

1. Open the fuel door.
2. Remove the two fuel door retaining bolts (1). (Tighten: Fuel door bolts to 5 N·m)
3. Remove the fuel door.
4. Installation is in the reverse order of removal.

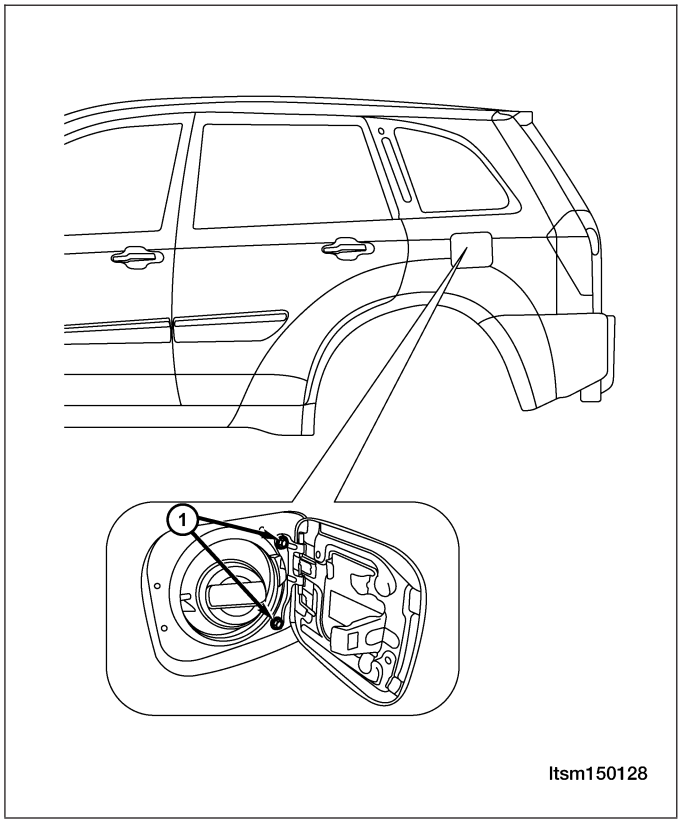

Downloaded from www.Manualslib.com manuals search engine

GRILLE

Grille

Removal & Installation

1. Open the hood.
2. Remove the radiator grille mounting bolts (1).
3. Remove the radiator grille.
4. Installation is in the reverse order of removal.

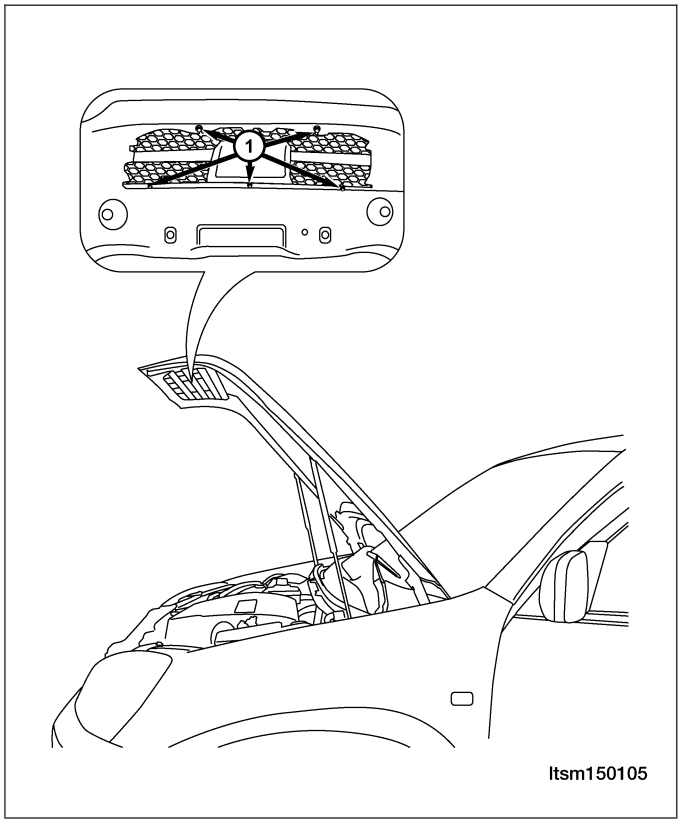

15

Downloaded from www.Manualslib.com manuals search engine

Hood

Removal & Installation

1. Remove the hood mounting bolts (1) and the stay bars (2).
   (Tighten: Hood mounting bolts to 23 ± 2 N·m)

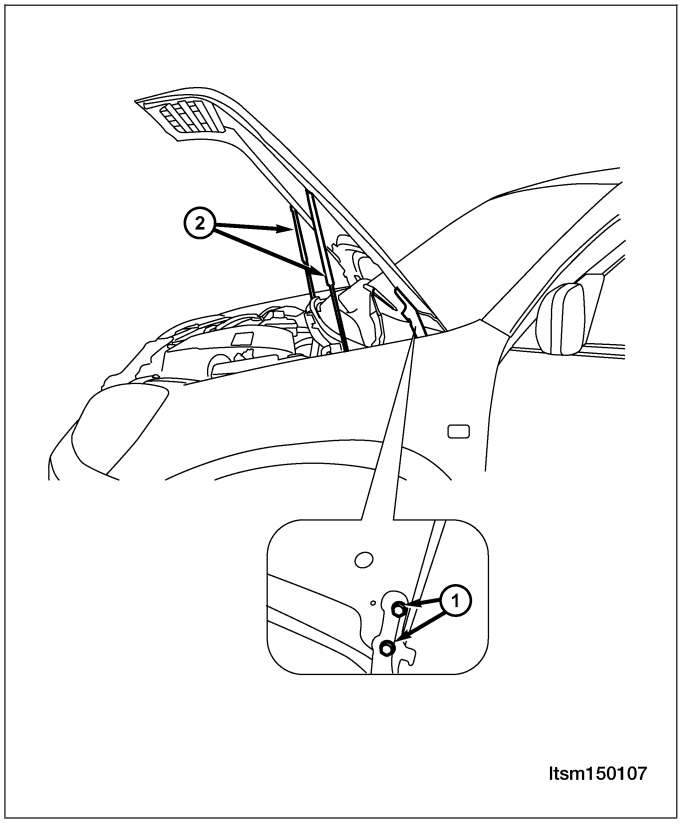

2. Loosen the windshield washer hose.
3. Remove the hood.
4. Installation is in the reverse order of removal.

Hood Adjustment

1. Adjust the hood gap with a spacer gauge.
   - The gap between the hood and the fender should be 5 ± 0.5 mm
   - The overall levelness when measured with a magnet should be 0-0.5 mm
2. Install the nuts (Part Number: Q1400820, 2 pcs both upper and lower) into the body for 2-3 turns, tighten with pneumatic wrench. Torque: 30 ± 4 N·m.

Check for the following after repair:

- Whether the bolts and nuts are assembled properly
- Whether the bolts and nuts are properly tightened
- Whether the gap between the hood and the fender are within specifications
- Whether the horizontal alignment of the front edge of the fenders is within specifications (0-0.5 mm)

Downloaded from www.Manualslib.com manuals search engine

Hood Release Cable

Removal & Installation

1. Remove the left lower trim of the instrument panel (See Instrument Panel Removal & Installation in Section 15 Body & Accessories).
2. Remove the lining of the left fender (See Fender Removal & Installation in Section 15 Body & Accessories).
3. Remove the radiator support (See Radiator Support Removal & Installation in Section 15 Body & Accessories).
4. Loosen the hood release cable.

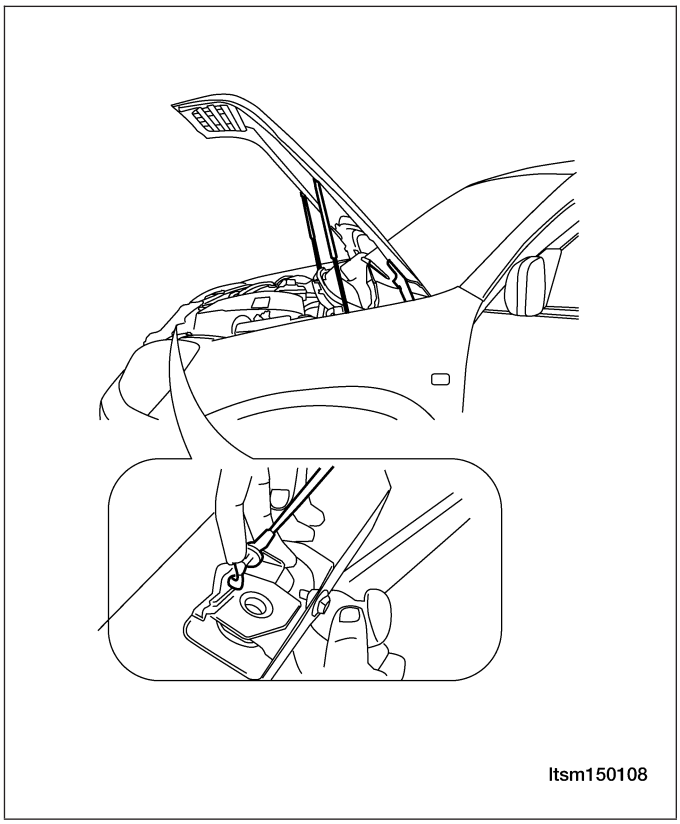

5. Remove the hood release cable.
6. Installation is in the reverse order of removal.

Downloaded from www.Manualslib.com manuals search engine

LUGGAGE RACK

Luggage Rack

Removal & Installation

1. Remove the luggage rack bolt cover and then remove the mounting bolts (1).
2. Remove the luggage rack.
3. Installation is in the reverse order of removal.

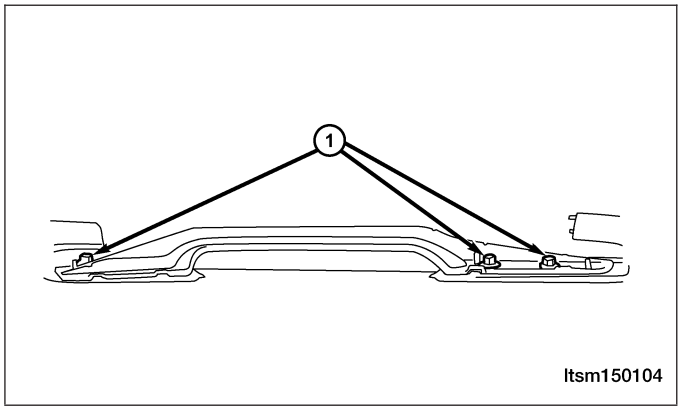

Downloaded from www.Manualslib.com manuals search engine

SPARE TIRE SUPPORT

Spare Tire Support

Removal & Installation

1. Loosen the spare tire cover clasp (1) and then remove the spare tire cover.

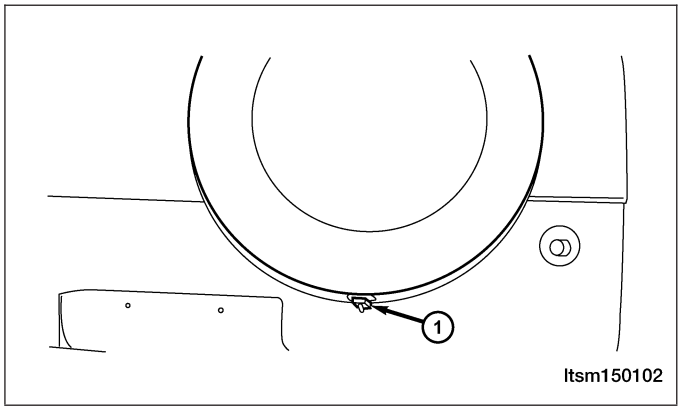

2. Using special tool, remove the spare tire mounting nuts (1) and then remove the spare tire.

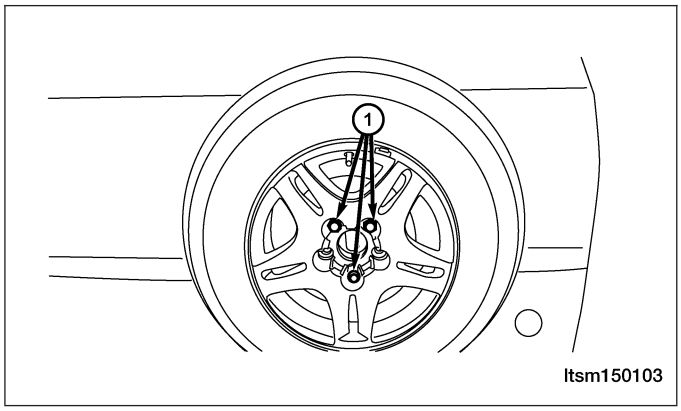

3. Remove the spare tire support mounting bolts (1) and then remove the spare tire support.

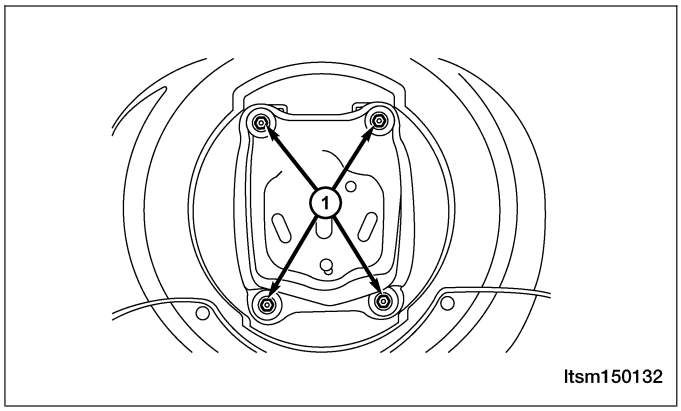

4. Installation is in the reverse order of removal.

Downloaded from www.Manualslib.com manuals search engine

HORN

Description

A dual note electric horn system is installed on this vehicle. The horn system features electromagnetic horns. The horn system includes the following components:

- Horn - The horns are located inside the left front bumper.
- Horn Switch - The horn switch is located under the driver airbag.

Operation

The horn system circuit is designed so that the system will remain operational, regardless of the ignition switch position.

Downloaded from www.Manualslib.com manuals search engine

Electrical Schematics

Horn (Page 1 of 1)

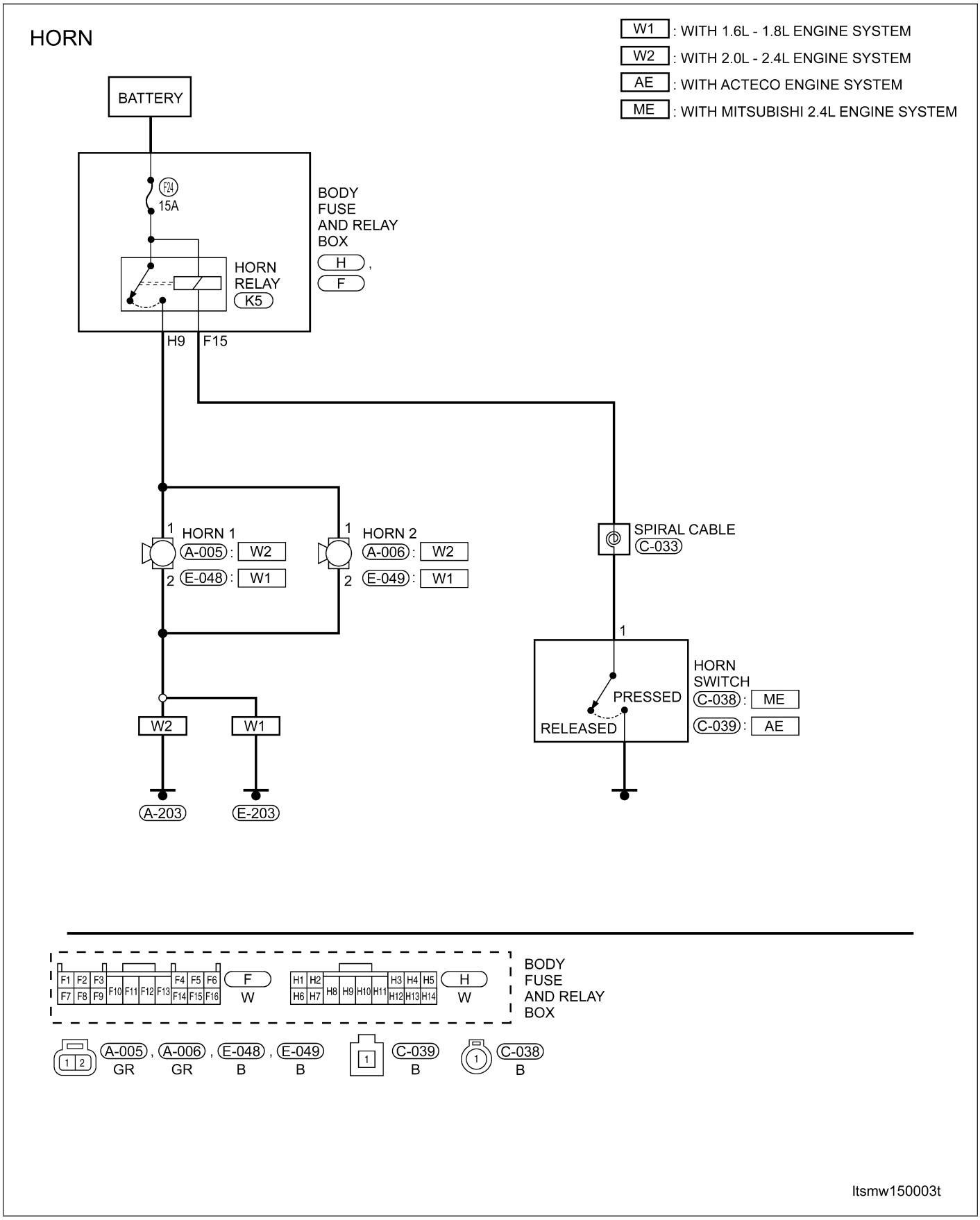

Downloaded from www.Manualslib.com manuals search engine

Horn

Removal & Installation

1. Remove the right headlamp assembly.
2. Disconnect the horn electrical connector.
3. Remove the horn mounting nut (1).
   (Tighten: Horn mounting nut to 8 N·m)
4. Remove the horn.
5. Remove the other horn like this horn.
6. Installation is in the reverse order of removal.

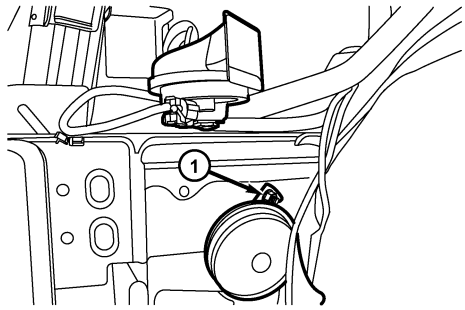

ltsm150084

Downloaded from www.Manualslib.com manuals search engine

MIRRORS

Description

The mirrors are controlled by a single switch assembly located on the driver's door trim panel. A three-position switch selects the right or left power mirror for adjustment. A momentary joystick directional switch allows the driver to adjust the selected power mirror in the Up & Down or Right & Left directions. The heated mirror system is controlled by the Body Control Module (BCM). When there is water vapor on the mirrors, the heated mirrors will eliminate the water vapor.

Operation

Use the mirror select switch, located on the driver's door trim panel to adjust the view obtained in the outside mirrors. Rotate the joystick for Left or Right mirror selection. Select a mirror and press the joystick that correspond with the direction that you want the mirror to move.

Downloaded from www.Manualslib.com manuals search engine

Electrical Schematics

Power Mirrors (Page 1 of 2)

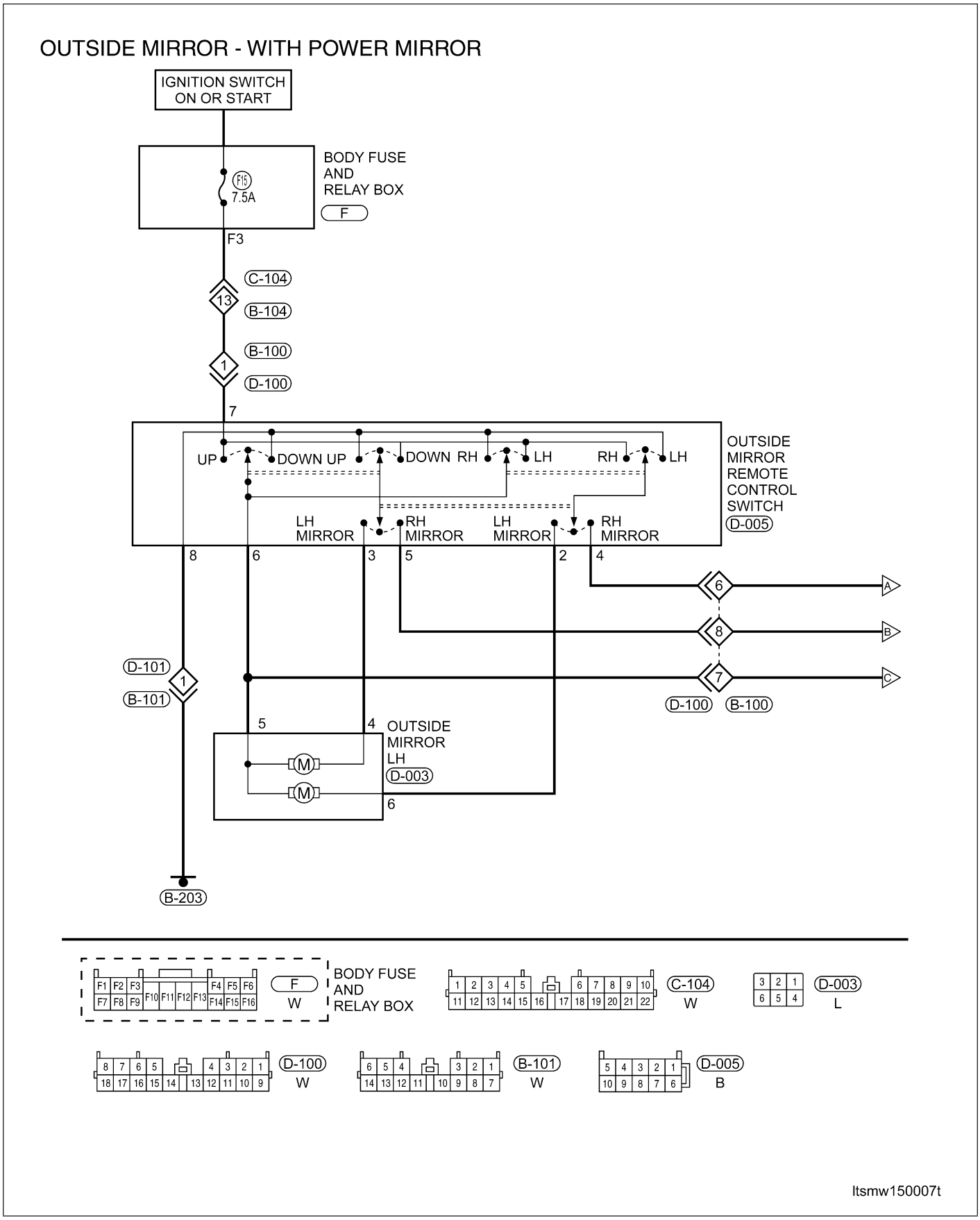

Downloaded from www.Manualslib.com manuals search engine

Power Mirrors (Page 2 of 2)

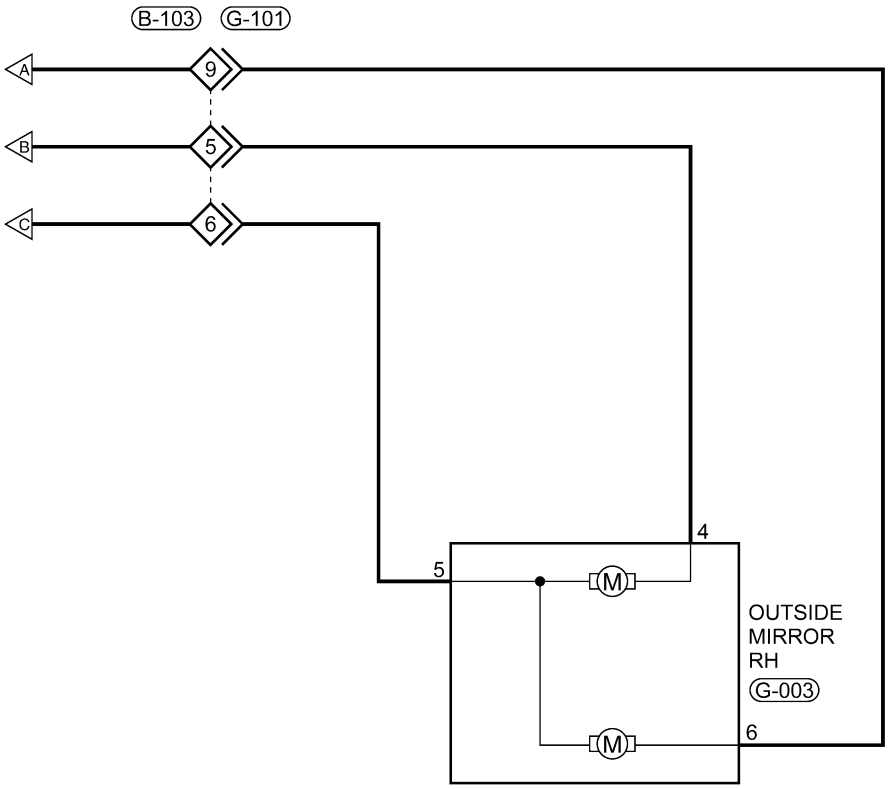

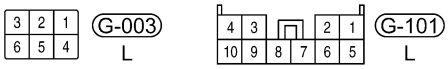

ltsmw150008t

Downloaded from www.Manualslib.com manuals search engine

Heated Mirrors (Page 1 of 2)

OUTSIDE MIRROR - WITH HEATED MIRROR

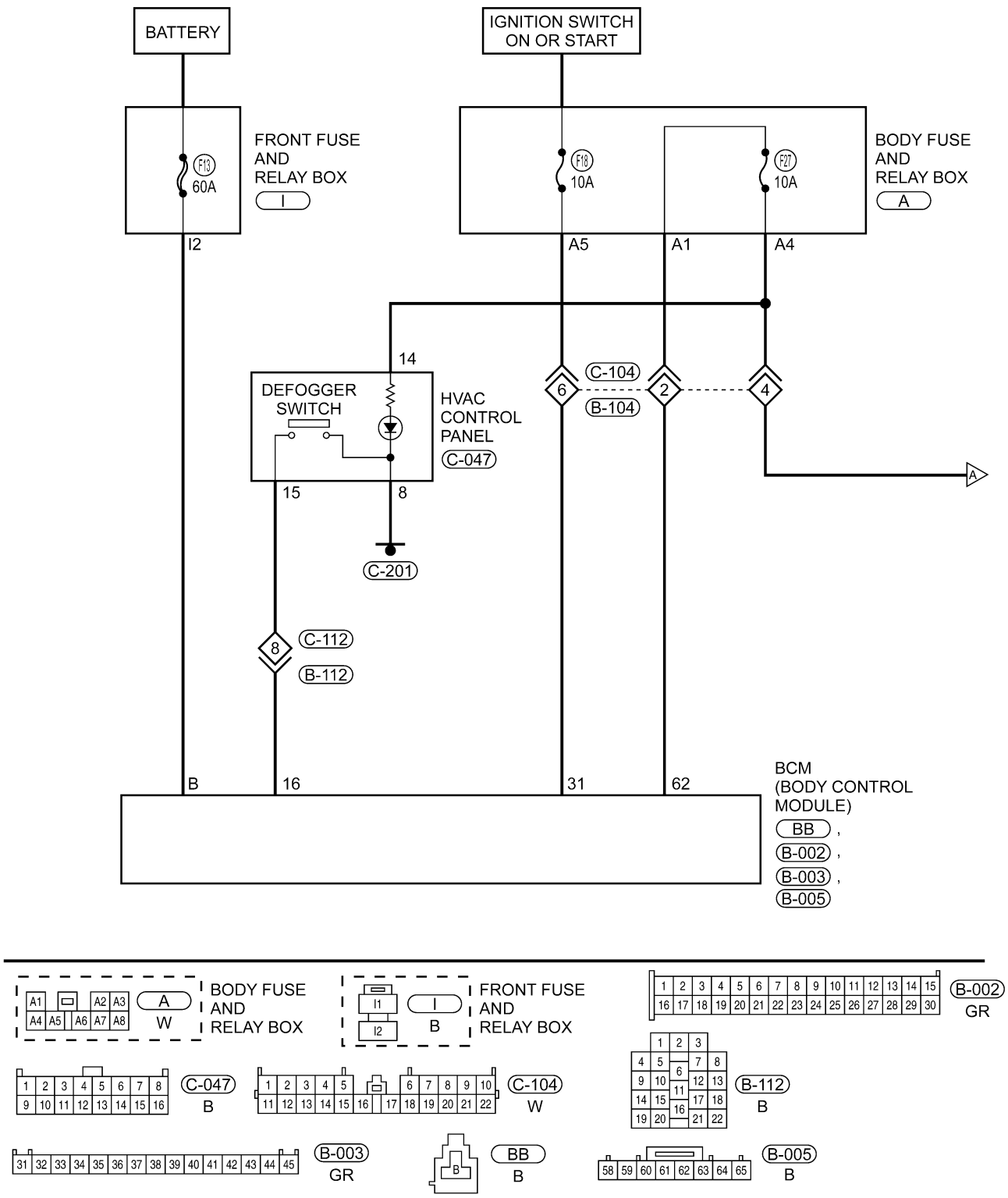

ltsmw150009t

Downloaded from www.Manualslib.com manuals search engine

Heated Mirrors (Page 2 of 2)

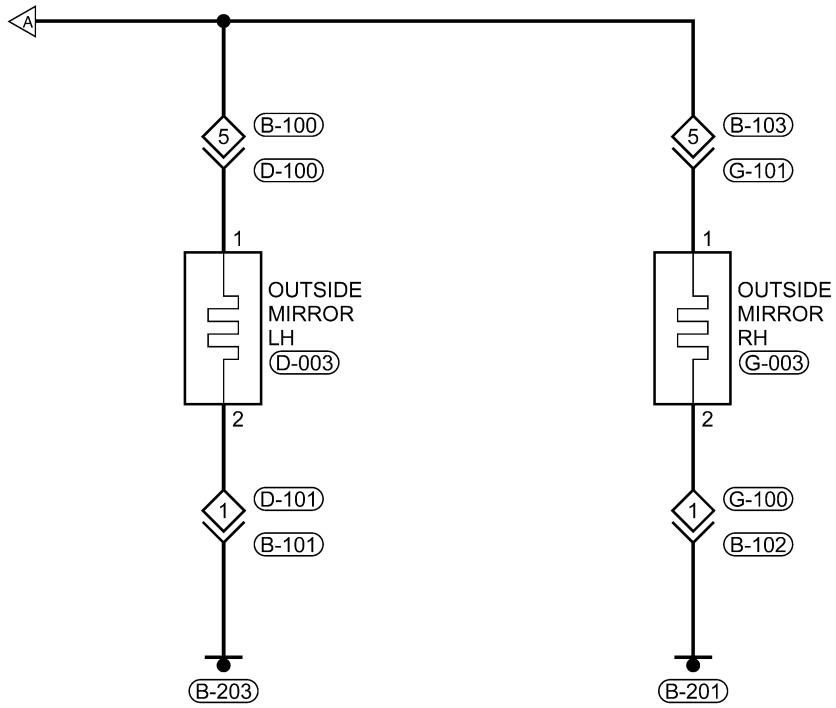

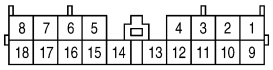

D-100
W

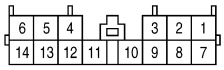

B-101 , B-102
W W

D-003 , G-003
L L

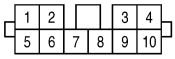

G-101
W

ltsmw150010t

Downloaded from www.Manualslib.com manuals search engine

Outside Mirror

Removal & Installation

1. Disconnect the negative battery cable.
2. Remove the outside mirror trim cover.
3. Remove the outside mirror retaining bolts (1).
4. Disconnect the outside mirror electrical connector (2).
5. Remove the outside mirror assembly.
6. Installation is in the reverse order of removal.

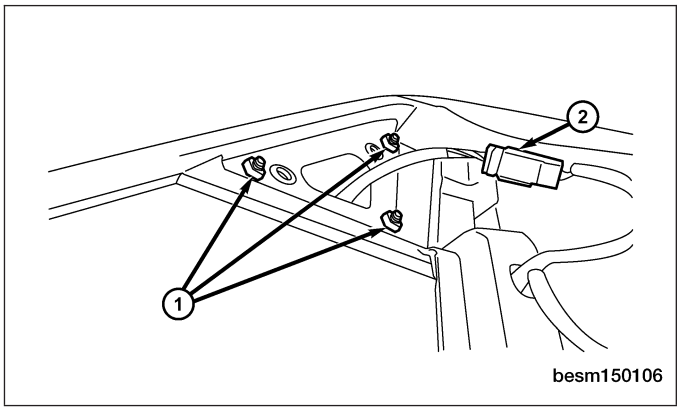

Installation Notes:

- If replacing the outside mirror lens, remove the lens and replace it before reinstalling the mirror.

Downloaded from www.Manualslib.com manuals search engine

PAINT

Paint Codes

Paint Codes

NUMBER	COLOR	ITEM CODE
1	Nasdaq Silver	KH
2	Wolfsburg Gray	GF
3	Chery White	BK
4	Ochre Red	DS
5	Margeret Blue	HW
6	Magic Black	CB
7	Wild Green	FJ

Downloaded from www.Manualslib.com manuals search engine

RADIATOR SUPPORT

Radiator Support

Removal & Installation

1. Remove the radiator support lever retaining bolts (1).

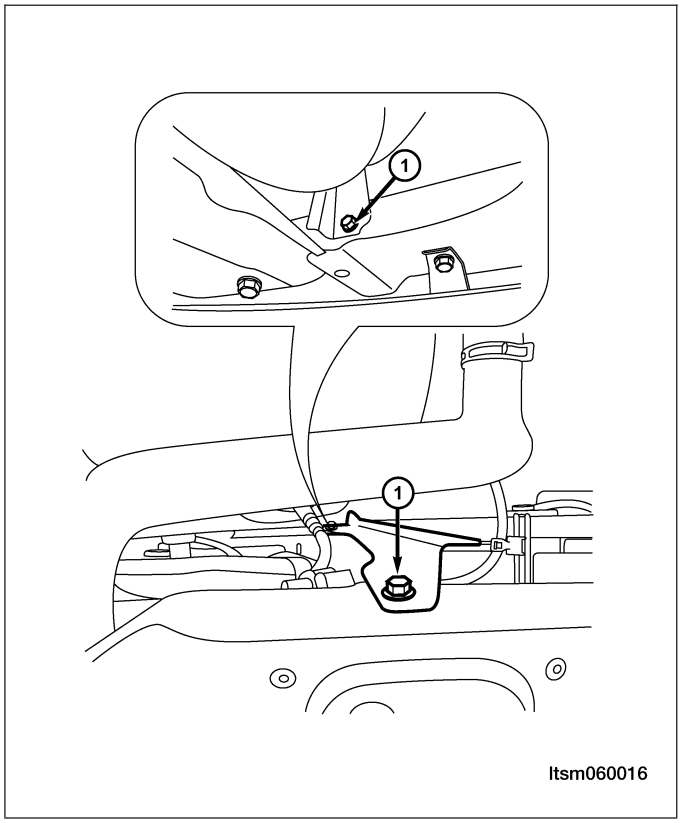

2. Remove the radiator support mounting bolts (1).

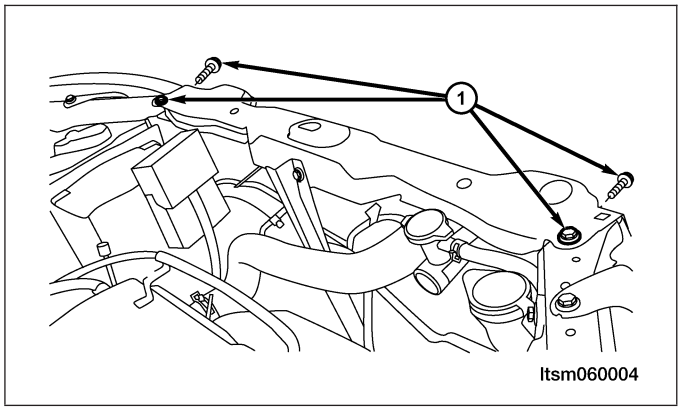

3. Loosen the hood release cable.
4. Installation is in the reverse order of removal

Downloaded from www.Manualslib.com manuals search engine

STATIONARY GLASS

Description

The stationary glass is comprised of the following:

- Front Windshield
- Rear Window
- Rear Window Defogger

Downloaded from www.Manualslib.com manuals search engine

Electrical Schematics

Rear Window Defogger (Page 1 of 1)

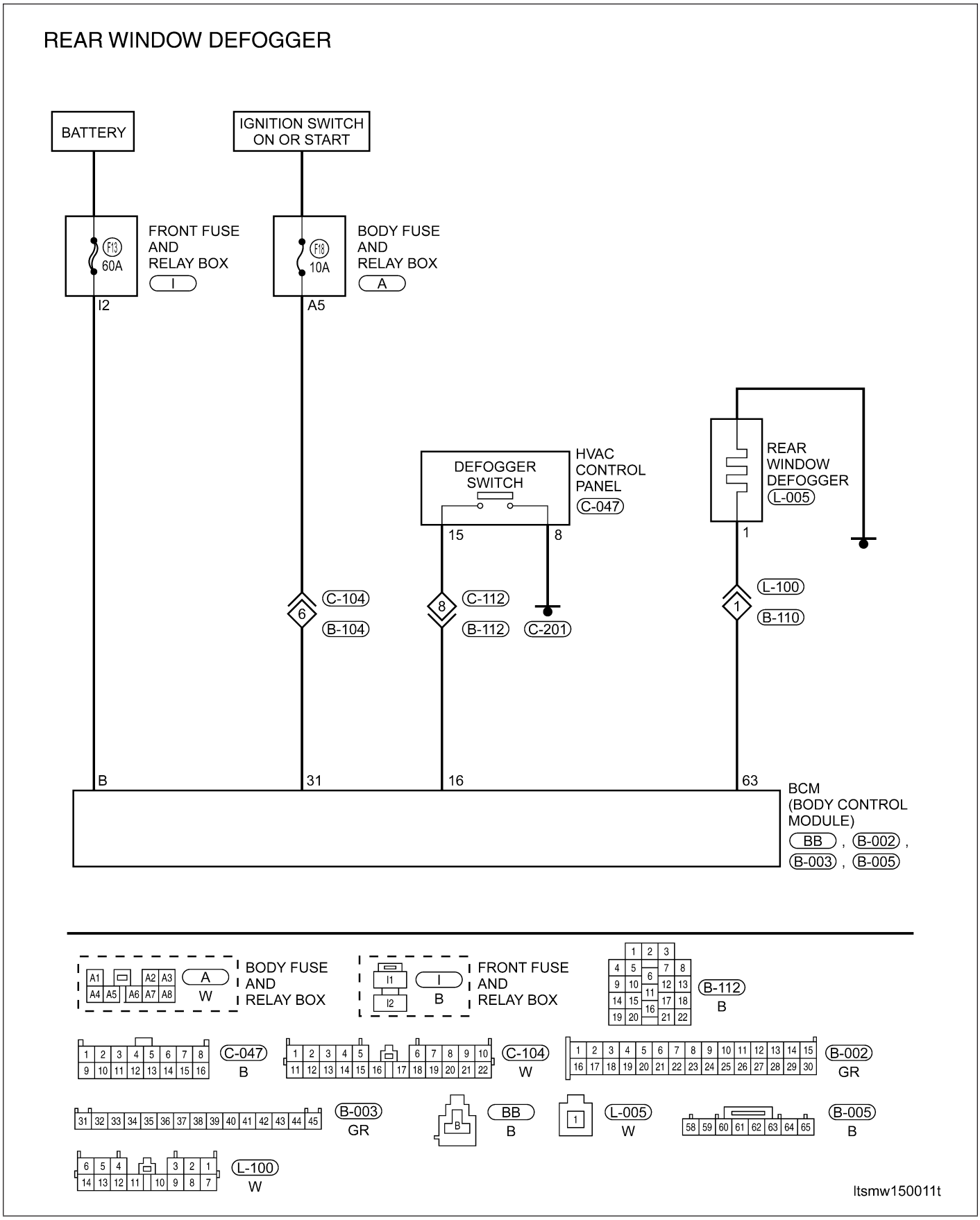

Downloaded from www.Manualslib.com manuals search engine

Front Windshield

Removal

1. Remove the wiper arms and the lower trim panel from the windshield (See Wiper Arm Removal & Installation in Section 15 Body & Accessories).
2. Using piano wire, insert the piano wire between the body and the glass. Attach wooden blocks to both ends of the piano wire.

CAUTION:
To prevent vehicle paint damage, use adhesive tape on painted surfaces during windshield removal. Place a plastic cover between the piano wire and the instrument panel to prevent the instrument panel from being scuffed when removing the glass.

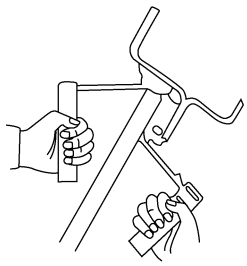
besm150013

3. Pull the piano wire around the glass, and cut off the bonding agent to remove the glass.

NOTE :
Leave as much bonding agent as possible on the body when removing the bonding portion of the glass.

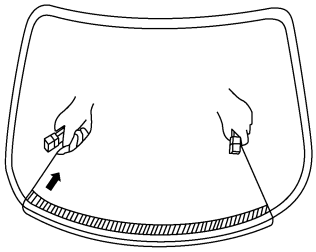
besm150014

Installation

1. Remove the rough portions on the body with a knife and clean the cut bonding agent with a rag soaked with cleaning solvent.

CAUTION:
Even if the entire bonding agent has been cleared, you should also clean the body surface. Do not touch the glass surface after cleaning.

2. Remove the stopper with a knife.
3. Clear the bonding agent adhered to the glass with a scraper and clean the glass with glass cleaner.

NOTE :
Do not touch the glass after cleaning.

Downloaded from www.Manualslib.com manuals search engine

4. Replace the clamping piece if necessary:
   - Remove the stopper with a knife.
   - Remove the old clamping piece.
   - Replace with a new clamping piece.
5. Position the glass:
   - Place the glass in the proper position.
   - Make reference marks on the glass and the body.
   - Remove the glass.
6. Clean the contact surface of the glass:
   - Clear any residue around the peripheral contact face of the glass with glass cleaner.

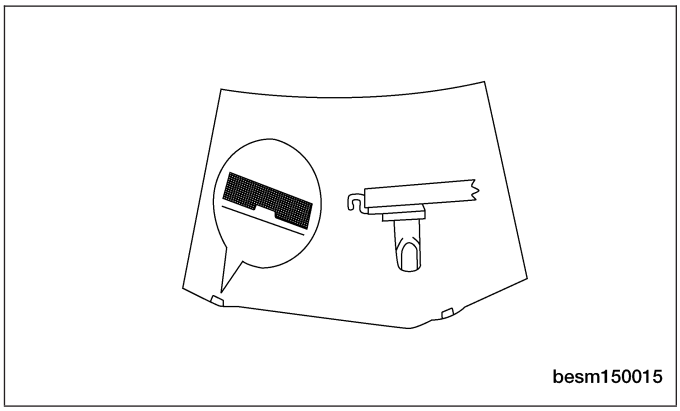
besm150015

NOTE :
Do not touch the glass surface after cleaning.

7. Install the water resistance piece:
   - Install the water resistance piece using double-sided adhesive tape as shown in the figure.
8. Apply a layer of primer M on the contact surface of the body and apply a layer of primer M on the contact face of the body with a brush.

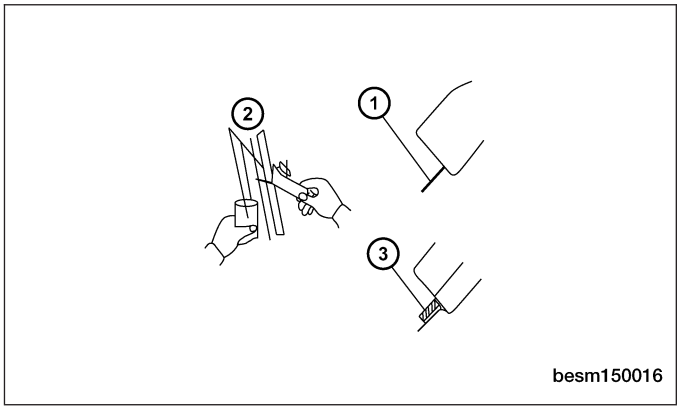

besm150016

Primer M	Primer M	Primer M

NOTE :
Allow the primer coat to dry for a minimum of 3 minutes. Do not apply the primer to the bonding agent. Do not save the opened primer M for later use.

9. Apply a layer of primer G on the contact surface of the glass:
   - Apply a layer of primer G on the edges and the contact surface of the glass with a brush or sponge.
   - Wipe the excess primer off with a clean rag before it dries.

NOTE :
Allow the primer coat to dry for a minimum of 3 minutes. Do not apply the primer to the bonding agent. Do not save the opened primer G for later use.

10. Mixing the bonding agent:
    - Clean a mixing board and a scraper completely with solvent.
    - Thoroughly mix 500 grams of host crystal with 75 grams of hardener on a mixing board with a scraper.

NOTE :
Make sure that the molding is installed before the bonding agent has cured.

Downloaded from www.Manualslib.com manuals search engine

11. Applying the bonding agent:
    - Cut off the pot tip and fill the bonding agent into the pot.
    - Place the pot into the sealant gun.
    - Apply the bonding agent on the glass as shown in the figure.

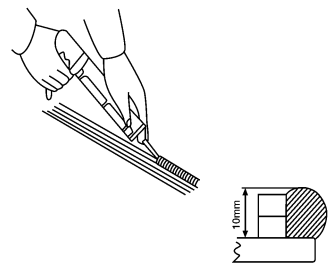

besm150017

CAUTION:
Verify that the water resistant piece is adhered to the panel of the body as shown in the figure.

12. To install the glass, align the reference marks on the glass and the body and then lightly press the glass into the body opening.
13. Apply the bonding agent on the edges of the glass with a scraper.
14. Remove any excessive or over flown bonding agent with a scraper.
15. Clamp the glass until the bonding agent has hardened.
16. Check for water leakage:
    - Perform the leakage test after the hardening period.
    - Seal any leaks with the proper sealant.
17. Install the upper molding of the windshield:
    - Install the upper windshield molding on the body and tap it lightly to fasten it.
    - Install the outer windshield molding.

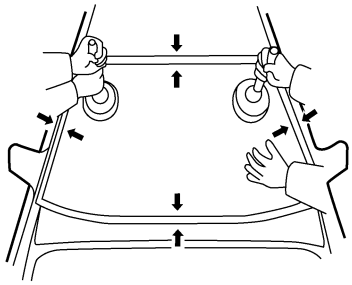
besm150018

Rear Window

Removal

1. Open the back cargo door.
2. Remove the back cargo door trim panel.
3. Disconnect the defroster grid electrical connector.
4. Remove the double-sided adhesive tape at both ends of the molding with a scraper.
5. Rear window removal:
    - Using piano wire, insert the piano wire between the body and the glass.
    - Attach wooden blocks to both ends of the piano wire.
    - Pull the piano wire through between the body and the glass from inside of the vehicle.
    - Pull the piano wire along the bonding agent to cut it off.

CAUTION:
Do not let the piano wire damage the two stoppers.
- Remove the rear window.

Installation

1. Place the rear window molding around the glass and fit it manually.
2. Remove the rough portions on the body with a knife and clean the cut bonding agent with a rag soaked with cleaning solvent.

Downloaded from www.Manualslib.com manuals search engine

CAUTION:

Even if the entire bonding agent has been cleared, you should also clean the body surface. Do not touch the glass surface after cleaning.

3. Remove the stopper with a knife.
4. Clean the removed rear window:
   - Clean any bonding agent adhered to the glass with a scraper.
   - Remove the stopper with a knife.
   - Clean the glass with glass cleaner.

NOTE :

Do not touch the glass after cleaning

5. Position the glass:
   - Place the glass in the proper position.
   - Make reference marks on the glass and the body.
   - Remove the glass.
6. Clean the contact surface of the glass:

   NOTE: Do not touch the glass surface after cleaning.

- Clear any residue around the peripheral contact face of the glass with glass cleaner.

7. Apply a layer of primer M on the contact surface of the body with a brush.

NOTE :

Allow the primer coat to dry for a minimum of 3 minutes. Do not apply the primer to the bonding agent. Do not save the opened primer M for later use.

8. Apply a layer of primer G on the contact surface of the glass:
   - Apply a layer of primer G on the edges and the contact surface of the glass with a brush or sponge.
   - Wipe the excess primer off with a clean rag before it dries.

NOTE :

Allow the primer coat to dry for a minimum of 3 minutes. Do not apply the primer to the bonding agent. Do not save the opened primer G for later use.

9. Mixing the bonding agent:
   - Clean a mixing board and a scraper completely with solvent.
   - Thoroughly mix 500 grams of host crystal with 75 grams of hardener on a mixing board with a scraper.

NOTE :

Make sure that the molding is installed within the application period of the bonding agent, and the bonding agent should be mixed within 5 minutes.

10. Applying the bonding agent:
    - Cut off the pot tip and fill the bonding agent into the pot.
    - Place the pot into the sealant gun.
    - Apply the bonding agent on the glass as shown in the figure.

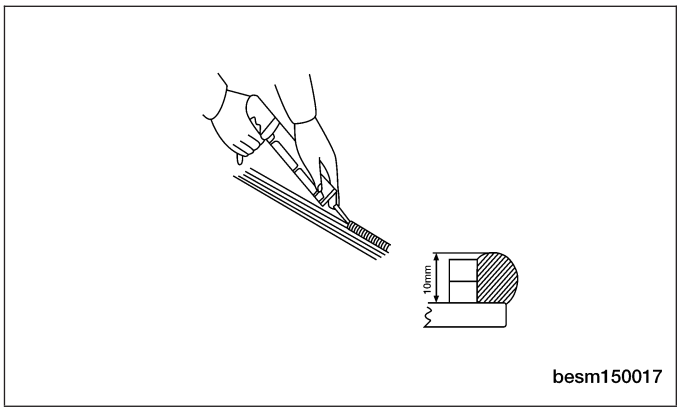

CAUTION:

Verify that the water resistant piece is adhered to the panel of the body as shown in the figure.

Downloaded from www.Manualslib.com manuals search engine

11. To install the glass, align the reference marks on the glass and the body and then lightly press the glass into the body opening.
12. Apply the bonding agent on the edges of the glass with a scraper.
13. Remove any excessive or over flown bonding agent with a scraper.
14. Clamp the glass until the bonding agent has hardened.
15. Check for water leakage:
    - Perform the leakage test after the hardening period.
    - Seal any leaks with the proper sealant.
16. Install the rear window molding:
    - Install the rear window outer lower molding on the body and tap it lightly to fasten it.
    - Connect the leads of the rear window defroster.

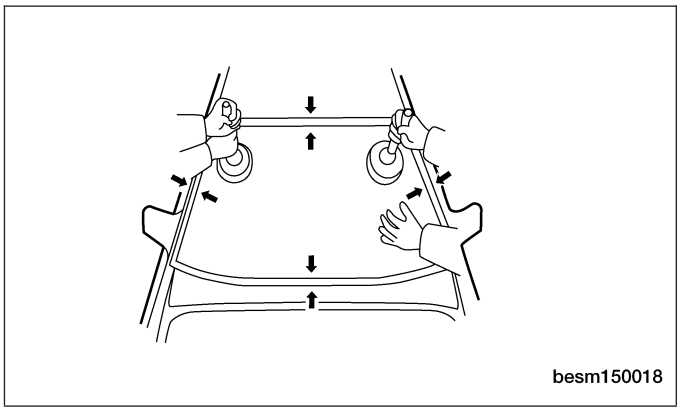
besm150018

Downloaded from www.Manualslib.com manuals search engine

SUNROOF

Description

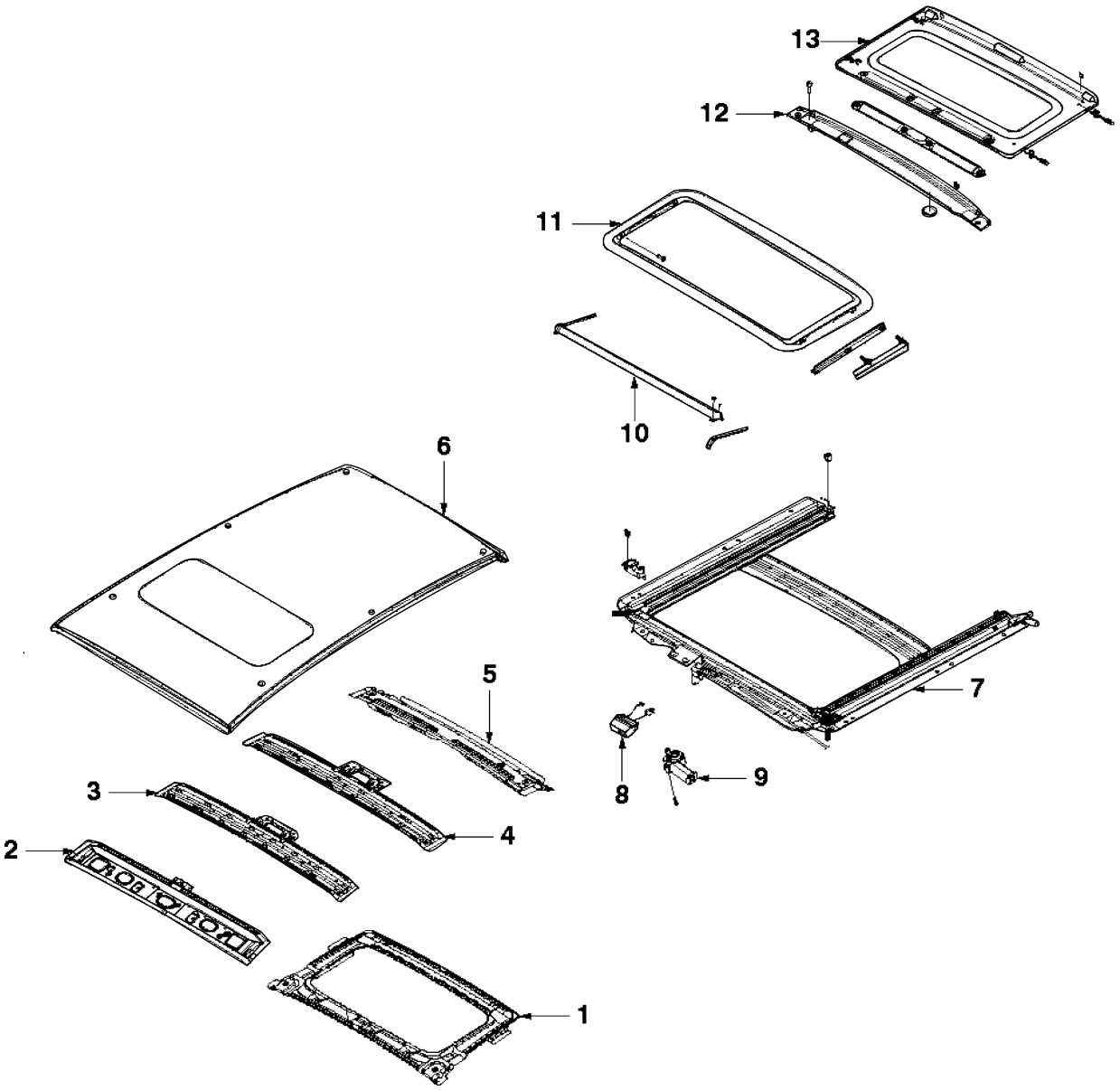

besm150008

Downloaded from www.Manualslib.com manuals search engine

The sunroof consists of the following components:
- Sunroof Frame (1)
- Windshield Frame (2)
- Sunroof Central Bracket (3)
- Sunroof Back Bracket (4)
- Rear Roof Frame (5)
- Head Liner (6)
- Sunroof Track (7)
- Sunroof Module (8)
- Sunroof Motor (9)
- Sunroof Deflector (10)
- Sunroof Glass (11)
- Guiding Gutter (12)
- Sun Visor (13)

Operation

The sunroof control module monitors the sunroof switch input. The sunroof control module controls the output of the sunroof motor, to move the sunroof glass to the requested position. The power sunroof will operate with the ignition switch turned to ON.

Downloaded from www.Manualslib.com manuals search engine

Electrical Schematics

Sunroof (Page 1 of 2)

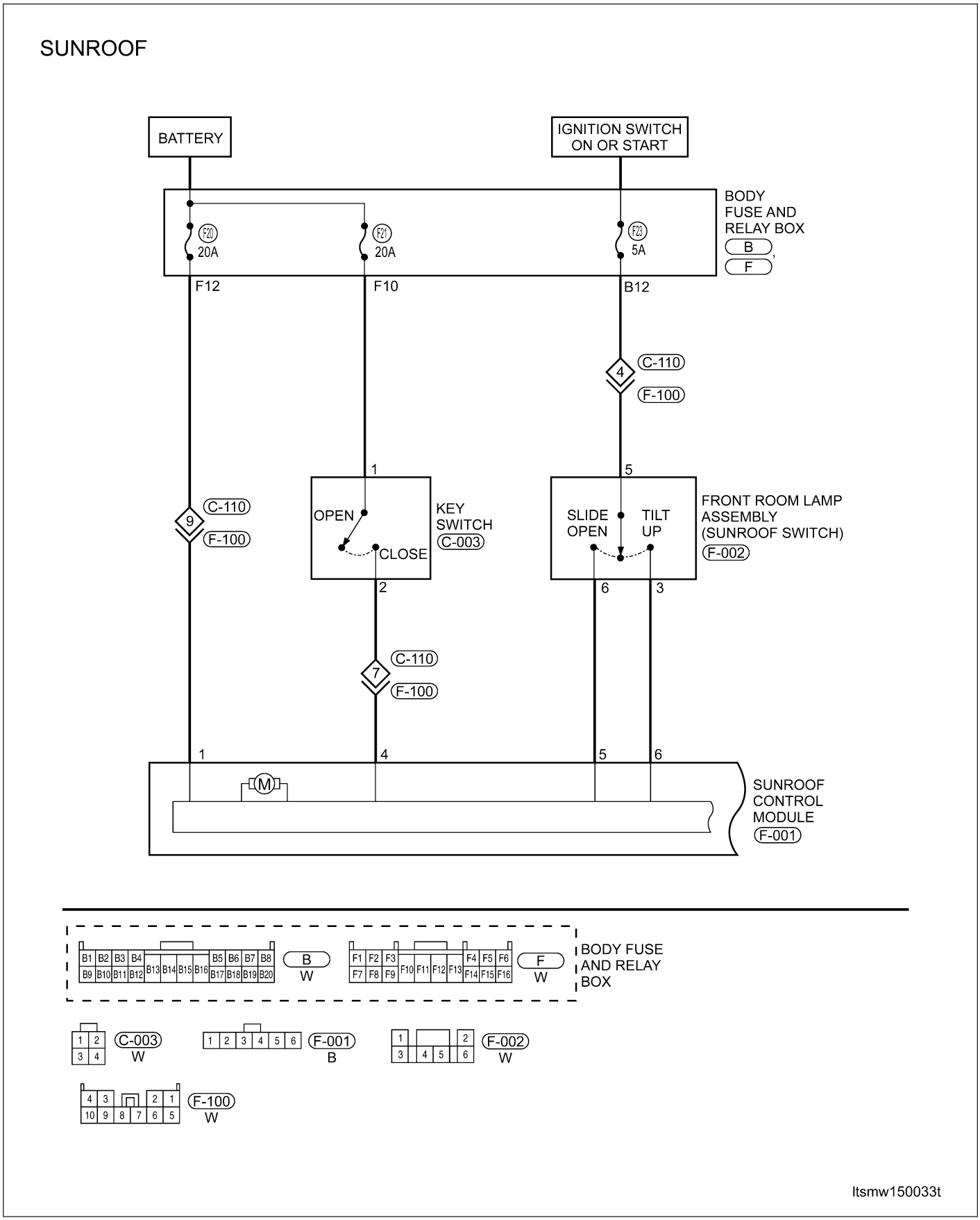

Downloaded from www.Manualslib.com manuals search engine

Sunroof (Page 2 of 2)

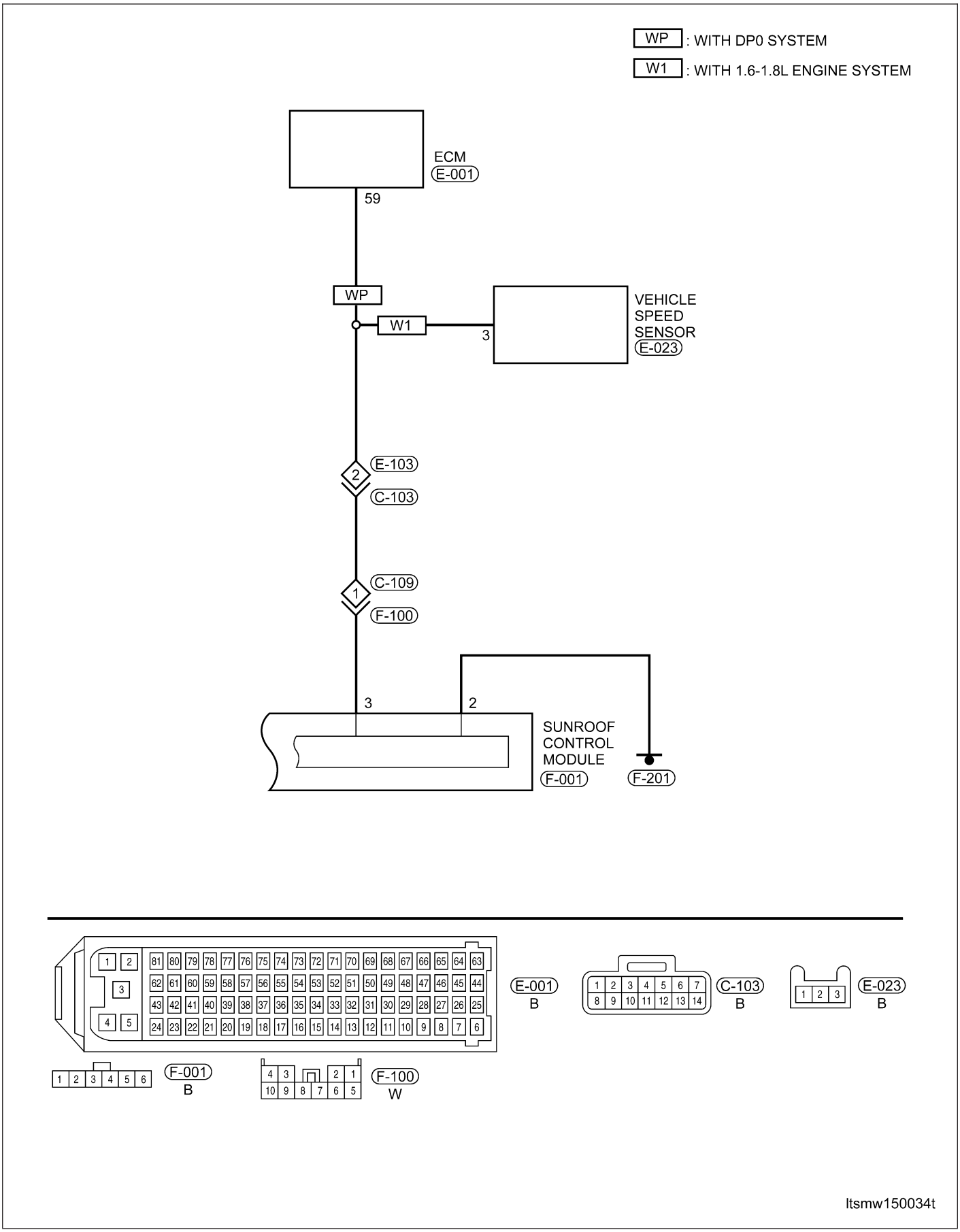

Downloaded from www.Manualslib.com manuals search engine

DIAGNOSIS & TESTING

Sunroof Memory Relearn

Sunroof Memory Loss

The sunroof should be initialized if any of the following conditions occur:

(1) Sunroof Power Failure

- If power is lost during the operation of sunroof (the Sunroof Control Module will record a malfunction) and the sunroof will need to be initialized.
- If power is lost within five seconds after normal operation has stopped, the Sunroof Control Module will not have enough time to store parameters, and the sunroof will need to be initialized.

(2) Sunroof Mechanical Failure

- If after the sunroof has been used for a period of time, and can not be closed in position (there is a gap between mechanical components). The time is generally about 2 years before the sunroof will need to be initialized.

Sunroof Initialization Steps

- When the sunroof is closed, press and hold the open switch until the sunroof is completely opened, keep pressing the switch for five seconds, then release the switch.
- Press and hold the sunroof close switch within two seconds until the sunroof is completely closed, keep pressing the switch for five seconds, then release the switch.

Downloaded from www.Manualslib.com manuals search engine

ON-VEHICLE SERVICE

Sunroof Glass

Removal & Installation

1. Operate the sunroof switch to lift the sunroof to the full tilt position.
2. Push the inner trim strip (side cover inner LH/RH) rearwards to remove.
3. Slowly remove the four retaining bolts (1) and remove the glass.
4. Remove the glass.
5. Installation is in the reverse order of removal.

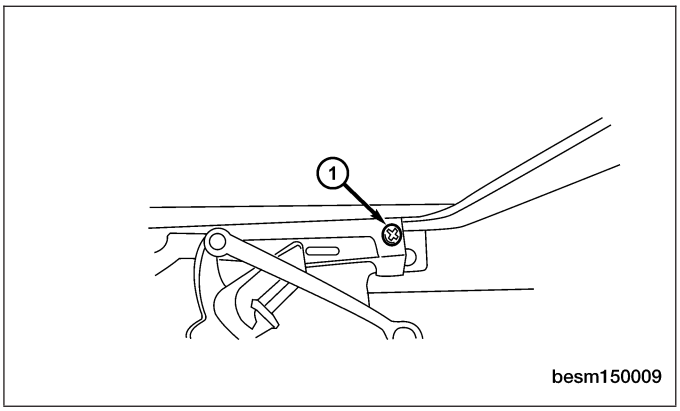

Installation Notes:

- Operate the power switch to adjust the sliding mechanism without the glass to the full open position, and then place the glass in the middle of the support bar of the sliding mechanism.
- Loosely install four bolts. Then pull the glass forward slightly and tighten the other bolts slightly from the middle one by one.
- Operate the sunroof to the full closed position.
- Begin to adjust the four glass retaining bolts while pulling the glass slightly forward.
- Turn on the power switch and operate the sunroof to test the operation (check and adjust the height/start-up noise/collision of the glass).
- Move the glass to the full open position again, and then stick the inner trim strip to the support bar of the sliding mechanism.
- Test the on/off operation, starting and running operation as well as the noise of the sunroof after installation to make sure that no abnormal conditions exist.

Sunroof Sun Visor

Removal & Installation

1. Remove the sunroof glass (See Sunroof Glass Removal & Installation in Section 15 Body & Accessories).
2. Remove the locating clamp (1) as shown in the figure (each at left and right).
3. Remove the sun visor rear ward.
4. Installation is in the reverse order of removal.

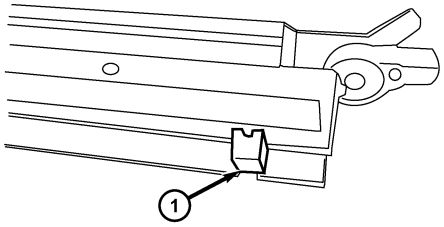

15

Downloaded from www.Manualslib.com manuals search engine

Sunroof Motor

Removal & Installation

1. Operate the sunroof to the full closed position before disassembling.
2. Remove the roof interior trim/ceiling light.
3. Disconnect the sunroof motor electrical connector and the wiring harness between the sunroof motor and the sunroof control module, and then cut off the band retaining the motor electrical harness.
4. Remove the sunroof motor retaining bolts (1).
5. Remove the sunroof motor.
6. Installation is in the reverse order of removal.

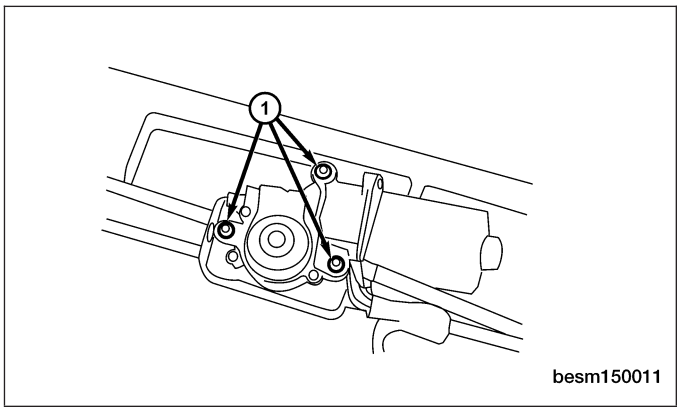

Sunroof Control Module

Removal & Installation

1. Operate the sunroof to the full closed position before disassembling.
2. Remove the roof interior trim/ceiling light.
3. Disconnect the sunroof motor electrical connector and the wiring harness between the sunroof motor and the sunroof control module.
4. Remove the retaining bolts that attach the sunroof control module to the roof.
5. Installation is in the reverse order of removal.

Downloaded from www.Manualslib.com manuals search engine

WEATHERSTRIP

Front Door Weatherstrip

Removal & Installation

1. Remove the door trim panel (See Front Door Disassembly & Assembly in Section 15 Body & Accessories).
2. Remove the front door weatherstrip (1).

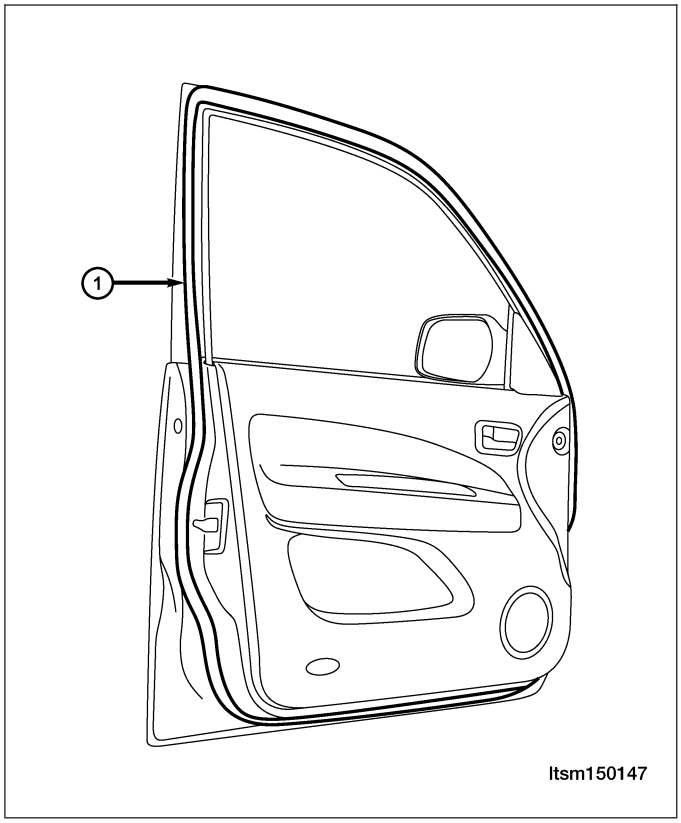

3. Installation is in the reverse order of removal.

Installation Notes:

- During the weatherstrip installation, every corner should be fitted in place with no folds. The joint of the weatherstrip should be placed in the lower middle of the door opening. The weatherstrip should have a proper rigidity and should not interfere with the opening and closing of the door after the lock and hinge have been adjusted. The surface of the assembled rubber strip should not have any defects such as deformation and warp.

Downloaded from www.Manualslib.com manuals search engine

Rear Door Weatherstrip

Removal & Installation

1. Remove the rear door weatherstrip (1).
2. Installation is in the reverse order of removal.

Installation Notes:

- During the weatherstrip installation, every corner should be fitted in place with no folds. The joint of the weatherstrip should be placed in the lower middle of the door opening. The weatherstrip should have a proper rigidity and should not interfere with the opening and closing of the door after the lock and hinge have been adjusted. The surface of the assembled rubber strip should not have any defects such as deformation and warp.

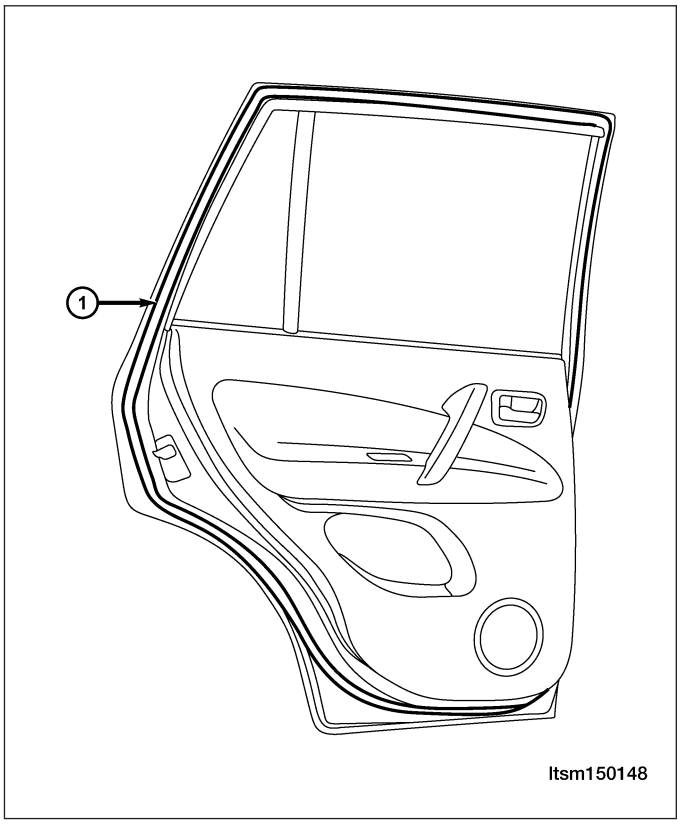

Downloaded from www.Manualslib.com manuals search engine

WIPERS AND WASHERS

Description

The wiper system operates the front and rear wipers. The windshield wiper system includes the following components:

- Wiper and Washer Switch
- Front Wiper Motor
- Rear Wiper Motor
- Front Wiper Arm
- Rear Wiper Arm
- Front Wiper Link
- Washer Bottle
- Washer Pump

Operation

The wiper system is controlled by the wiper and washer switch. The wiper and washer system operate with the ignition switch is in the ON position. All wiper and washer functions are controlled by rotating the control knob on the end of the control stalk to the MIST, OFF, INT, LO or HI wiper positions.

Downloaded from www.Manualslib.com manuals search engine

Electrical Schematics

Wiper and Washer System (Page 1 of 4)

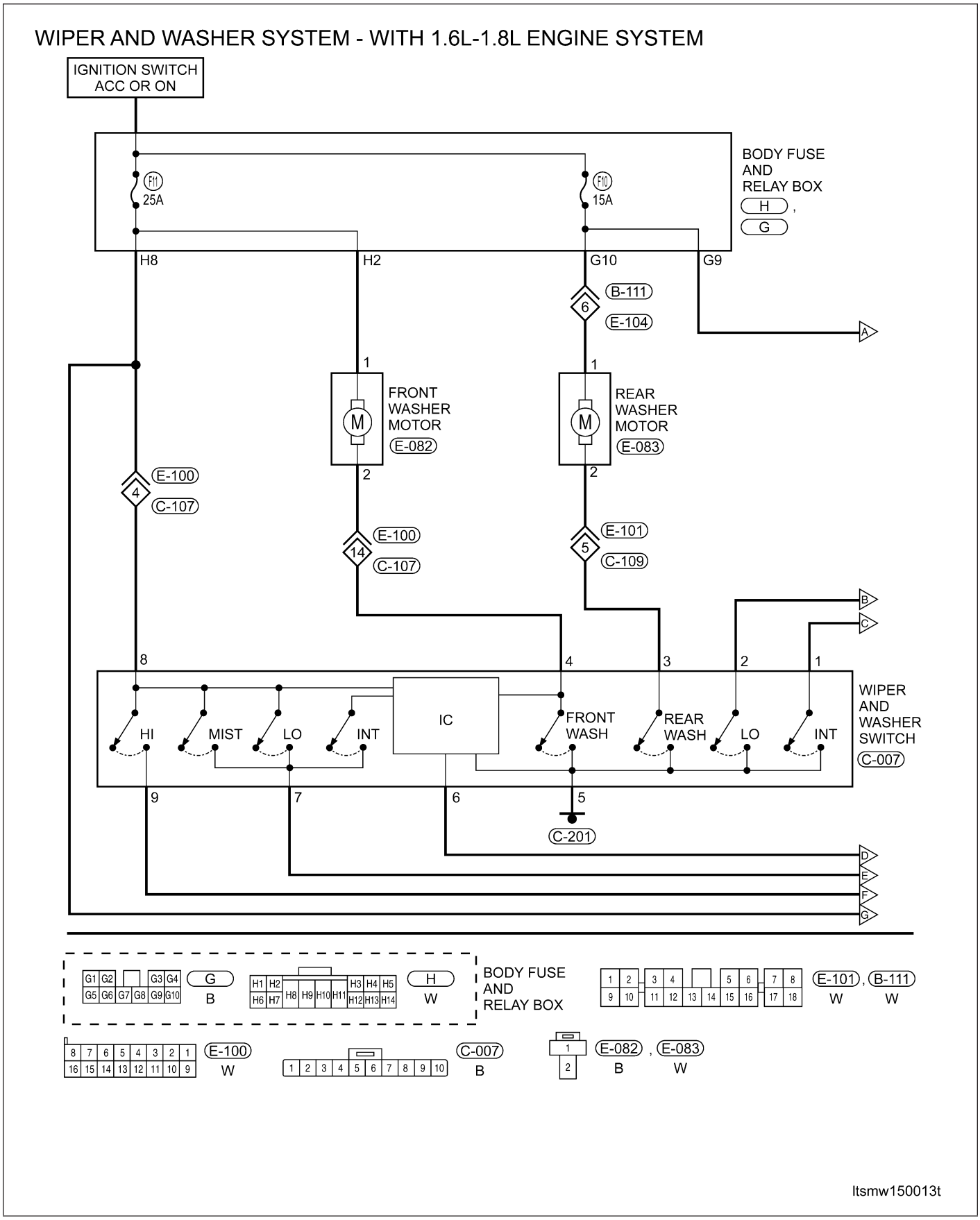

Downloaded from www.Manualslib.com manuals search engine

Wiper and Washer System (Page 2 of 4)

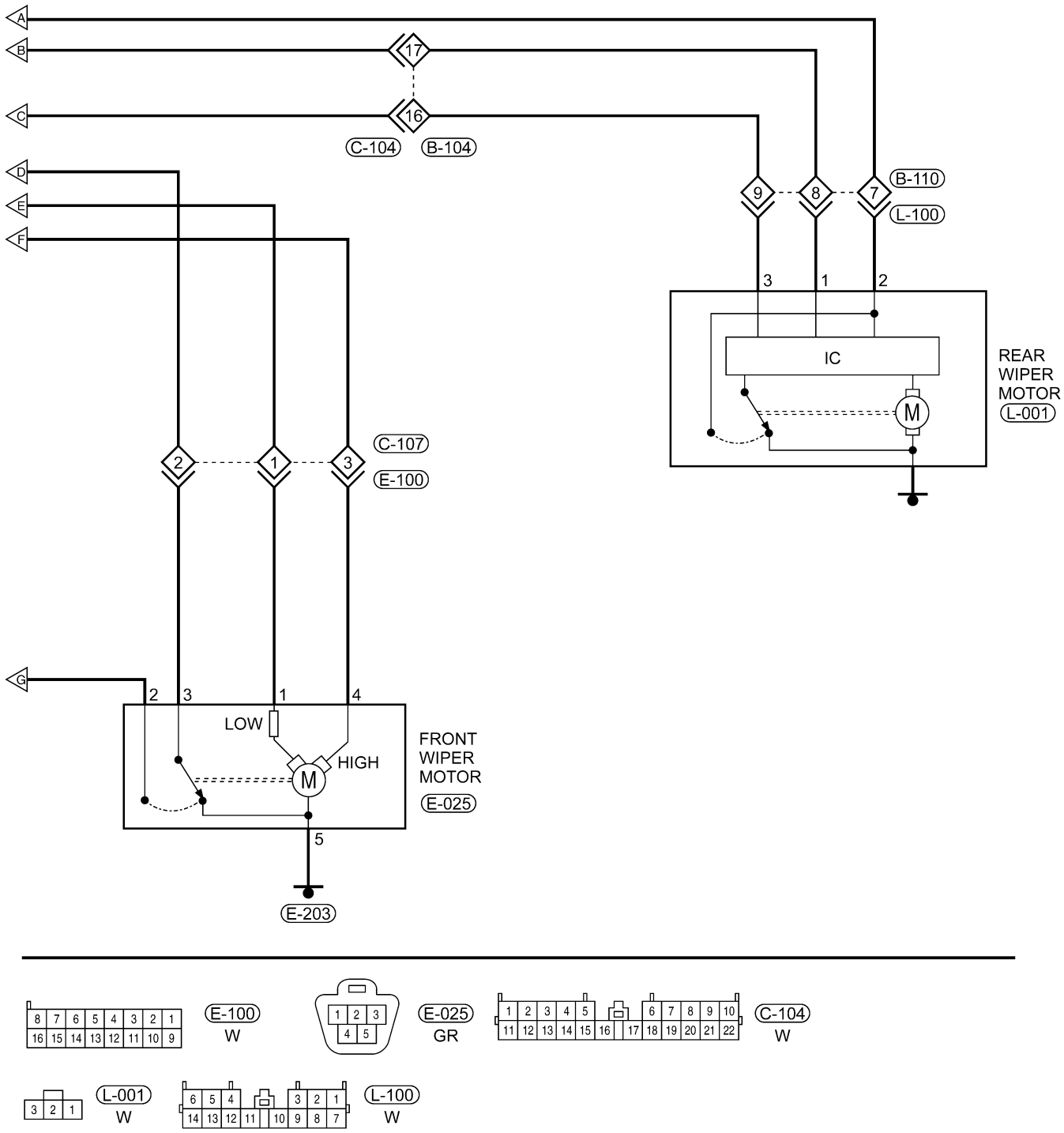

ltsmw150014t

Downloaded from www.Manualslib.com manuals search engine

Wiper and Washer System (Page 3 of 4)

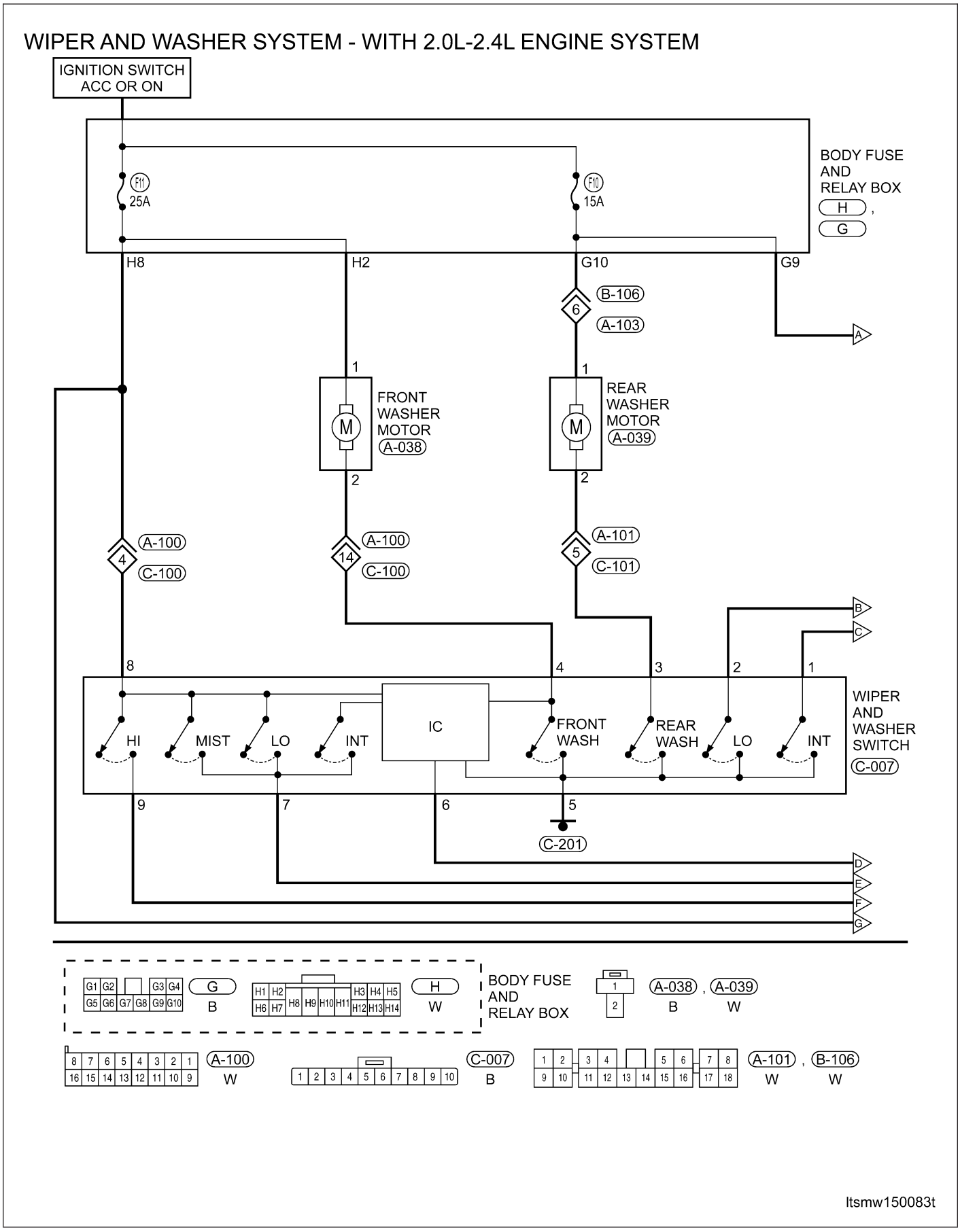

Downloaded from www.Manualslib.com manuals search engine

Wiper and Washer System (Page 4 of 4)

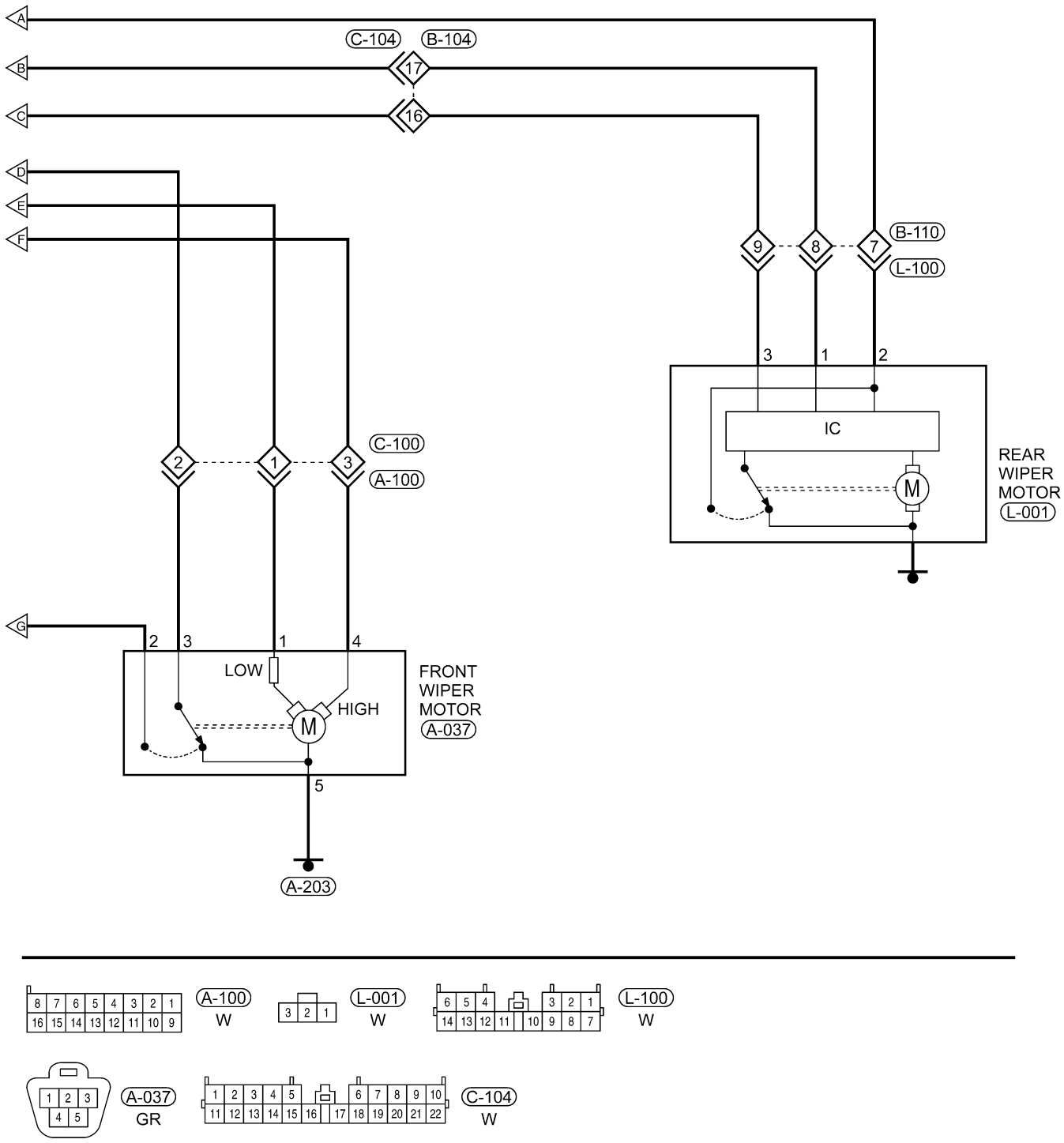

ltsmw150084t

Downloaded from www.Manualslib.com manuals search engine

Front Wiper Motor

Removal & Installation

1. Disconnect the negative battery cable.
2. Remove the wiper arm protective caps for the wiper arm mounting nuts.
3. Remove the wiper arm mounting nuts (1).
   (Tighten: Wiper arm mounting nuts to 55 ± 3 N·m)
4. Remove two wiper arms.

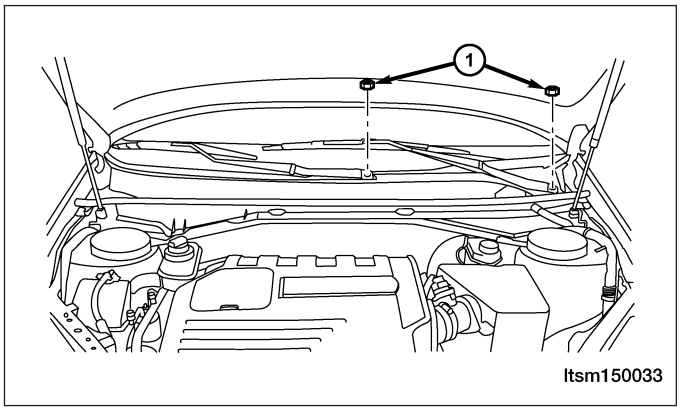

5. Remove the lower trim panel of the front windshield.
6. Remove the wiper arm linkage mechanism mounting bolts (1).
   (Tighten: Wiper arm linkage mechanism mounting bolts to 10 ± 1 N·m)
7. Disconnect the wiper motor connector (2), and remove the linkage mechanism assembly.

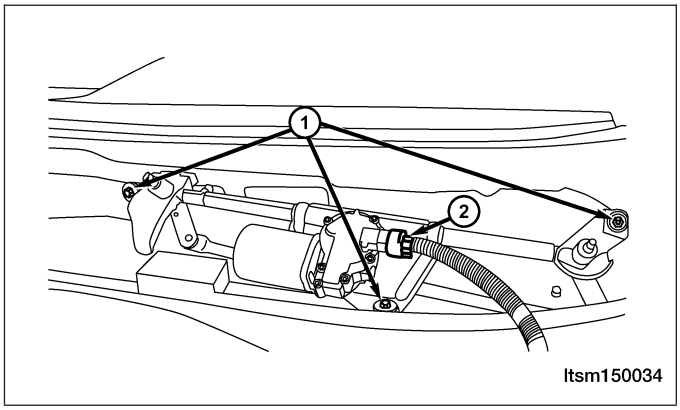

8. Installation is in the reverse order of removal.

Downloaded from www.Manualslib.com manuals search engine

Rear Wiper Motor

Removal & Installation

1. Disconnect the negative battery cable.
2. Remove the rear wiper arm nut protective cap from the rear wiper arm.
3. Remove the wiper arm mounting nut (1), and remove the wiper arm, and the rubber ring.
   (Tighten: Rear wiper arm mounting nut to 20 ± 3 N·m)
4. Open the back cargo door.
5. Remove the back door panel.

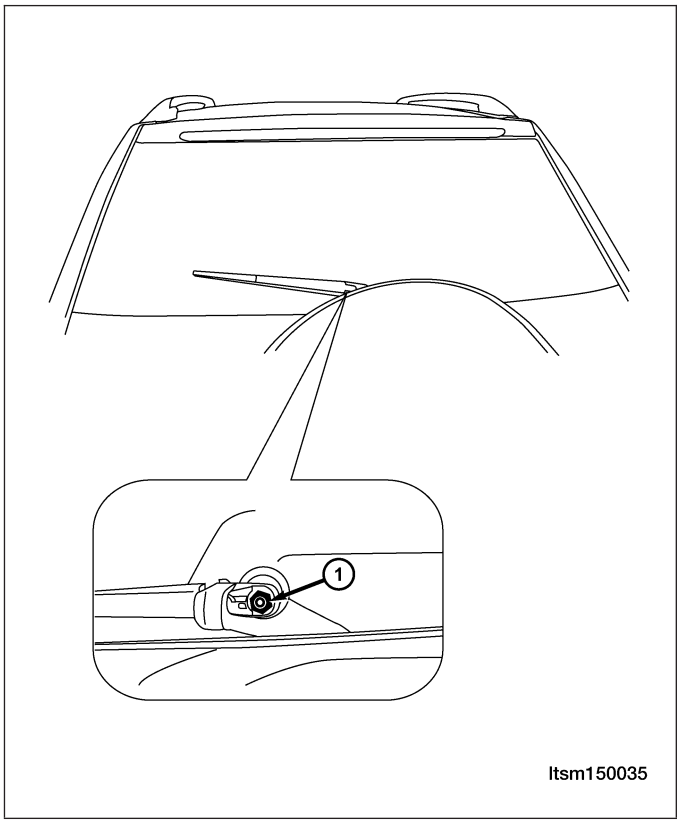

6. Disconnect the rear wiper motor electrical connector (2), and the rear wiper motor mounting bolts (1).
   (Tighten: Rear wiper motor mounting bolts to 10 ± 1 N·m)

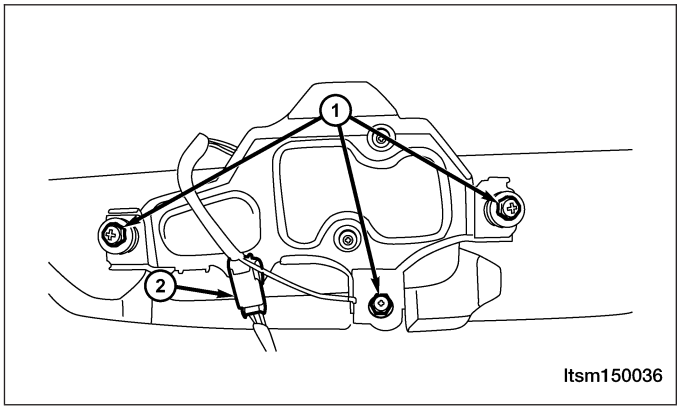

7. Remove the rear wiper motor.
8. Installation is in the reverse order of removal.

Downloaded from www.Manualslib.com manuals search engine

Front Wiper Arm

Removal & Installation

1. Remove the wiper arm protective caps for the wiper arm mounting nuts (1).
2. Remove the wiper arm mounting nuts.
   (Tighten: Wiper arm mounting nuts to 55 ± 3 N·m)
3. Remove two wiper arms (1).

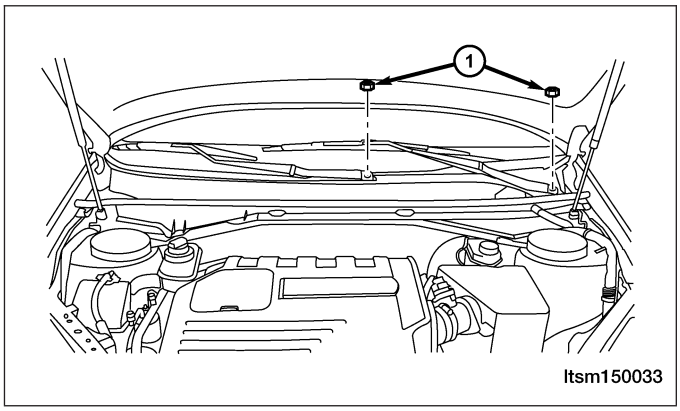

Rear Wiper Arm

Removal & Installation

1. Remove the rear wiper arm nut protective cap from the rear wiper arm.
2. Remove the wiper arm mounting nut (1), and remove the wiper arm, and the rubber ring.
   (Tighten: Rear wiper arm mounting nut to 20 ± 3 N·m)
3. Installation is in the reverse order of removal.

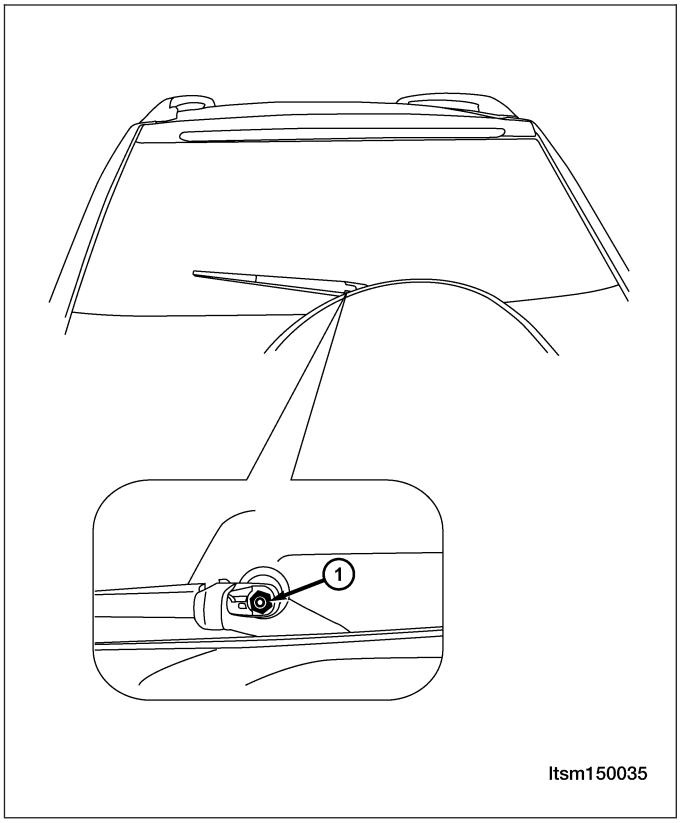

Downloaded from www.Manualslib.com manuals search engine

Front Wiper Link

Removal & Installation

1. Disconnect the negative battery cable.
2. Remove the left lower trim panel of the front windshield.
3. Remove the mounting bolts (1) and the front wiper motor electrical connector (2), then remove the wiper link.
   (Tighten: Wiper arm linkage mechanism mounting bolts to 10 ± 1 N·m)
4. Installation is in the reverse order of removal.

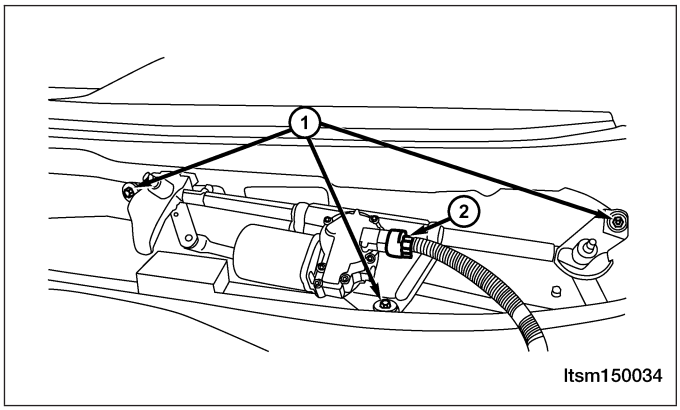

Washer Bottle

Removal & Installation

1. Disconnect the negative battery cable.
2. Remove the front bumper (See Front Bumper Removal & Installation in Section 15 Body & Accessories).
3. Disconnect the washer hose and the washer pump electrical connector.
4. Remove the mounting bolts (1) as shown to remove the washer bottle.
5. Installation is in the reverse order of removal.

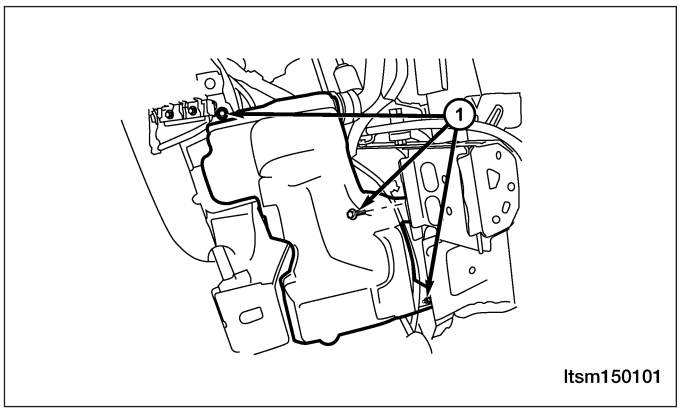

Washer Pump

Removal & Installation

1. Disconnect the negative battery cable.
2. Remove the front bumper (See Front Bumper Removal & Installation in Section 15 Body & Accessories).
3. Disconnect the washer hose and the washer pump electrical connector.
4. Drain the washer fluid.
5. Remove the washer pump assembly.
6. Installation is in the reverse order of removal.

Downloaded from www.Manualslib.com manuals search engine

Wiper Switch

Removal & Installation

1. Disconnect the negative battery cable.
2. Remove the steering wheel (See Steering Wheel Removal & Installation in Section 11 Steering).
3. Remove the steering column shroud retaining screws (1) and then remove the shroud.

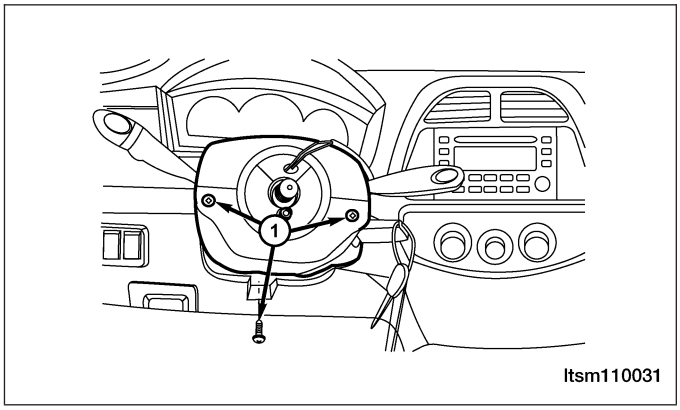

4. Disconnect the wiper switch electrical connector.
5. Loosen the clamp and remove the wiper switch.

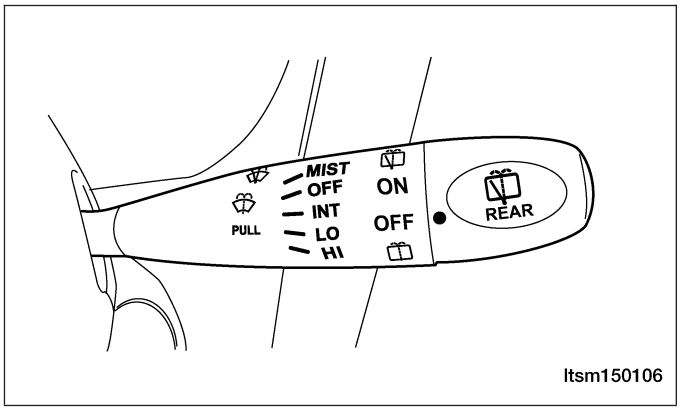

6. Installation is in the reverse order of removal.

Downloaded from www.Manualslib.com manuals search engine

WIRING
16

CONTENTS

	page
Wiring Information	**16-1**
Vehicle Power Distribution	**16-12**
Vehicle Ground Distribution	**16-27**
Vehicle Fuse Box Information	**16-37**
Vehicle Wiring Harness Layout	**16-44**

WIRING INFORMATION

GENERAL INFORMATION 16-2
- Description 16-2
- Electrical Schematics 16-2
- International Symbols 16-3

ELECTRICAL TROUBLESHOOTING 16-5
- Troubleshooting Wiring Problems 16-5
- Testing For Voltage 16-5
- Testing For Continuity 16-5
- Testing For A Short To Ground 16-5
- Intermittent and Poor Connections 16-5

ELECTRICAL TROUBLESHOOTING TOOLS 16-6
- Jumper Wires 16-6
- Voltmeter 16-6
- Ohmmeter 16-7

ELECTRICAL REPAIR 16-8
- Wire Repair 16-8
- Fuse Replacement 16-8

ELECTRICAL COMPONENTS 16-9
- Battery Cable 16-9
- Sensors, Switches, and Relays 16-9
- Connectors 16-10

Downloaded from www.Manualslib.com manuals search engine

GENERAL INFORMATION

Description

The wiring information includes wiring diagrams, proper wire and connector repair procedures, details of wire harness routing and retention, connector pin-out information and location views for the various wiring harness components, splices and grounds.

Electrical Schematics

The electrical schematics are grouped into individual service manual chapters. If a component is most likely found in a particular group, it will be shown complete (all wires, connectors, and pins) within that group. For example, the Engine Control Module (ECM) is most likely to be found in Chapter 03 (Electronic Engine Controls), so it is shown there complete. It can, however, be shown partially in another group if it contains some associated wiring.

Chery electrical schematics are designed to provide information regarding the vehicles wiring content. In order to effectively use the wiring diagrams to diagnose and repair Chery vehicles, it is important to understand the following features and characteristics:

- Diagrams are arranged such that the power (B+) side of the circuit is placed near the top of the page, and the ground (B-) side of the circuit is placed near the bottom of the page.
- All switches, components, and modules are shown in the at rest position with the doors closed and the key removed from the ignition switch.
- Components are shown with a solid line around the component.
- It is important to realize that no attempt is made on the diagrams to represent components and wiring as they appear on the vehicle. For example, a short piece of wire is treated the same as a long one.
- Switches and other components are shown as simply as possible, with regard to function only.

Downloaded from www.Manualslib.com manuals search engine

International Symbols

International symbols are used throughout the wiring diagrams. These symbols are consistent with those being used around the world. See How to Read Electrical Schematics in Section 01 General Information.

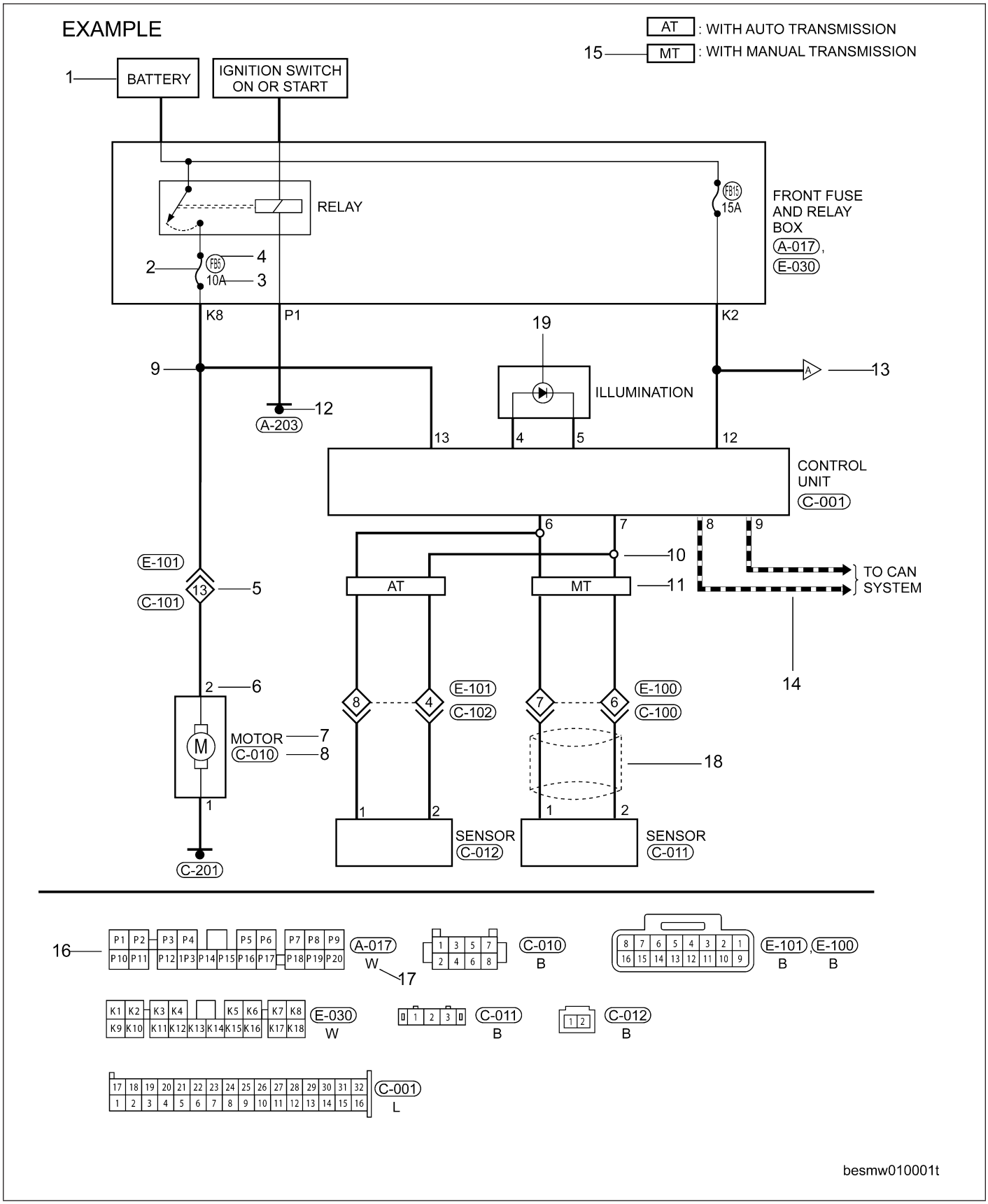

Downloaded from www.Manualslib.com manuals search engine

Below is a list of the symbols and their definitions that are used in the electrical schematics.

NUMBER	ITEM	DESCRIPTION
1	Power source	This represents the condition when the system receives battery positive voltage.
2	Fuse	The single line represents that this is a fuse.
3	Current rating	This represents the current rating of the fuse.
4	Fuse location	This represents the location of the fuse in the Power Fuse Box or Front Fuse and Relay Box.
5	Connectors	This represents connector E-101 is female and connector C-101 is male.
6	Terminal number	This represents the terminal number of a connector.
7	Component name	This represents the name of a component.
8	Connector number	This represents the connector number. The letter represents which harness the connector is located in.
9	Splice	The shaded circle represents that the splice is always on the vehicle.
10	Optional splice	The open circle represents that the splice is optional depending on vehicle application.
11	Option abbreviation	This represents that the circuit is optional depending on vehicle application.
12	Ground (GND)	This represents the ground connection. (See Ground Distribution in Section 16 Wiring). Ground connector number has no view face.
13	Page crossing	This arrow represents that the circuit continues to an adjacent page. The ″A″ corresponds with the ″A″ on the adjoining page of the electrical schematic.
14	Data link	This represents that the system branches to another system identified by cell data code.
15	Option description	This represents a description of the option abbreviation used on the page.
16	Connector views	This represents the connector information. This component side is described by the connector symbols.
17	Connector color	This shows a code for the color of the connector: B = Black W = White R = Red G = Green L = Blue Y = Yellow BR = Brown O = Orange GR = Gray
18	Shielded line	The line enclosed by broken line circle represents shielded wire.
19	Light-emitting diodes	As an illumination tool, in the circuit and instrument cluster.

Downloaded from www.Manualslib.com manuals search engine

ELECTRICAL TROUBLESHOOTING

Troubleshooting Wiring Problems

When troubleshooting wiring problems there are six steps which can aid in the procedure. The steps are listed and explained below. Always check for non-factory equipped components added to the vehicle before doing any diagnosis. If the vehicle is equipped with these items, disconnect them to verify these add-on items are not the cause of the problem.

Perform the following when troubleshooting a wiring problem:

1. Verify the problem.
2. Verify any related symptoms (do this by performing operational checks on components that are in the same circuit).
3. Analyze the symptoms (use the wiring diagrams to determine what the circuit is doing, where the problem most likely is occurring and where the diagnosis will continue).
4. Isolate the problem area.
5. Repair the problem area.
6. Verify the proper operation (for this step, check for proper operation of all items on the repaired circuit).

Testing For Voltage

1. Connect the ground lead of a voltmeter to a known good ground.
2. Connect the other lead of the voltmeter to the selected test point. The vehicle ignition may need to be turned ON to check voltage. Refer to the appropriate test procedure.

Testing For Continuity

1. Remove the fuse for the circuit being checked or, disconnect the battery.
2. Connect one lead of the ohmmeter to one side of the circuit being tested.
3. Connect the other lead to the other end of the circuit being tested (low or no resistance means good continuity).

Testing For A Short To Ground

1. Remove the fuse and disconnect all items involved with the fuse.
2. Connect a test light or a voltmeter across the terminals of the fuse.
3. Starting at the fuse block, wiggle the wiring harness about six to eight inches apart and watch the voltmeter/test light.
4. If the voltmeter registers voltage or the test light glows, there is a short to ground in that general area of the wiring harness.

Intermittent and Poor Connections

Most intermittent electrical problems are caused by faulty electrical connections or wiring. It is also possible for a sticking component or relay to cause a problem. Before condemning a component or wiring assembly, check the following items:

1. Connectors are fully seated
2. Spread terminals, or terminal push out
3. Terminals in the wiring assembly are fully seated into the connector/component and locked into position
4. Dirt or corrosion on the terminals (any amount of corrosion or dirt could cause an intermittent problem)
5. Damaged connector/component casing exposing the item to dirt or moisture
6. Wire insulation that has rubbed through causing a short to ground
7. Some or all of the wiring strands broken inside of the insulation
8. Wiring broken inside of the insulation

Downloaded from www.Manualslib.com manuals search engine

ELECTRICAL TROUBLESHOOTING TOOLS

Jumper Wires

- A jumper wire is used to create a temporary circuit. Connect the jumper wire between the terminals of a circuit to bypass a switch.

CAUTION:

Do not connect a jumper wire from the power source line to a body ground. This may cause burning or other damage to wiring harnesses or electronic components.

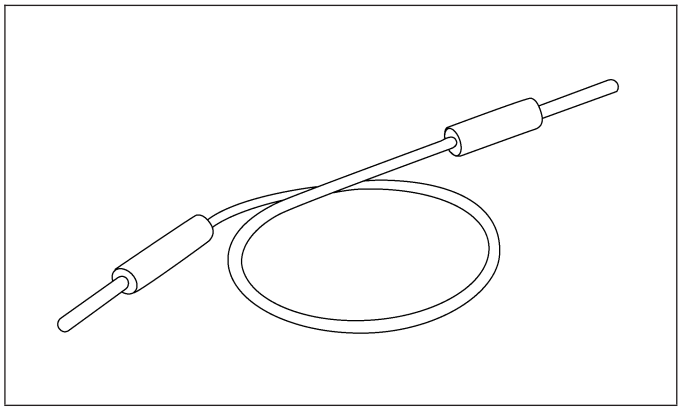

Voltmeter

- The DC voltmeter is used to measure circuit voltage. A voltmeter with a range of 15 V or more is used by connecting the positive (+) probe (red lead wire) to the point where voltage will be measured and the negative (-) probe (black lead wire) to a body ground.

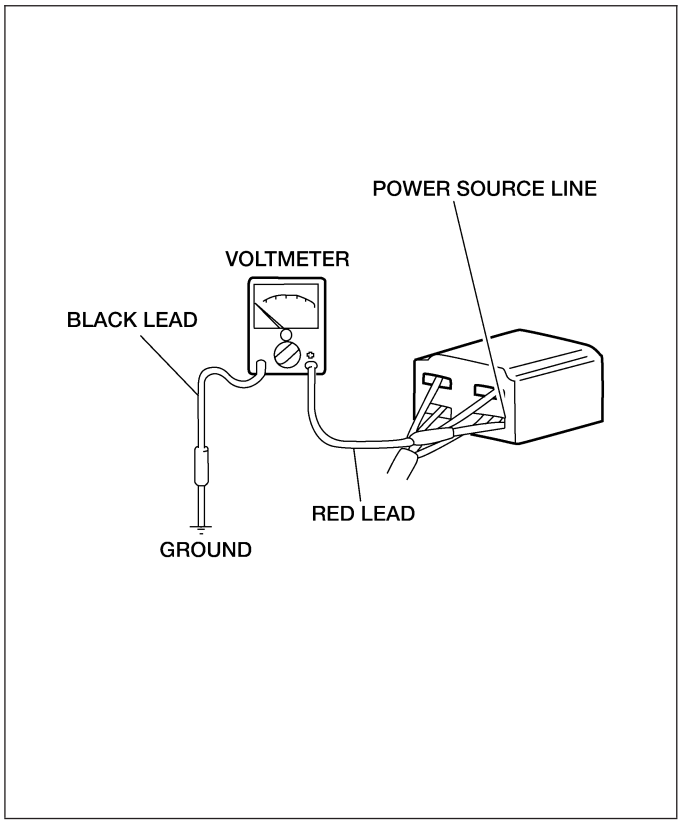

Downloaded from www.Manualslib.com manuals search engine

Ohmmeter

- The ohmmeter is used to measure the resistance between two points in a circuit and to check for continuity and short circuits.

CAUTION:

Do not connect the ohmmeter to any circuit where voltage is applied. This will damage the ohmmeter.

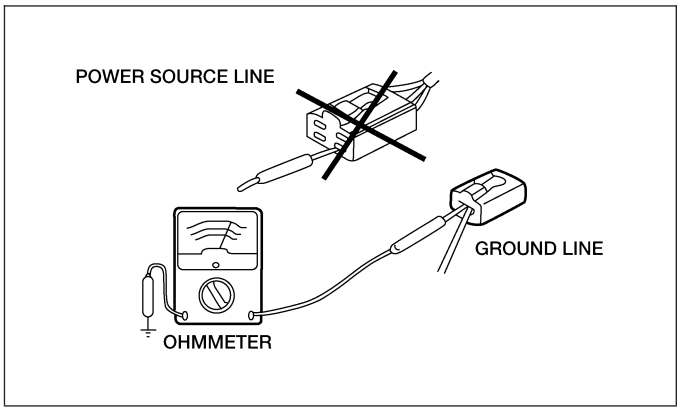

Downloaded from www.Manualslib.com manuals search engine

ELECTRICAL REPAIR

Wire Repair

NOTE :
When splicing a wire, it is important that the correct gage be used.

1. Remove one-half (1/2) inch of insulation from each wire that needs to be spliced.
2. Place a piece of adhesive lined heat shrink tubing on one side of the wire. Make sure the tubing will be long enough to cover and seal the entire repair area.
3. Place the strands of wire overlapping each other inside of the splice clip.
4. Using a crimping tool, crimp the splice clip and wires together.

NOTE :
Do not use acid core solder when making wiring repairs.

5. Solder the connection together using a soldering iron and rosin core type solder only.
6. Center the heat shrink tubing over the joint and heat using a heat gun. Heat the joint until the tubing is tightly sealed and sealant comes out of both ends of the tubing.

Fuse Replacement

- When replacing a fuse, be sure to replace it with one of the same capacity. If a fuse fails again, the circuit probably has a short and the wiring should be checked.
- Be sure the negative battery terminal is disconnected before replacing a main fuse.
- When replacing a pullout fuse, use the fuse puller.

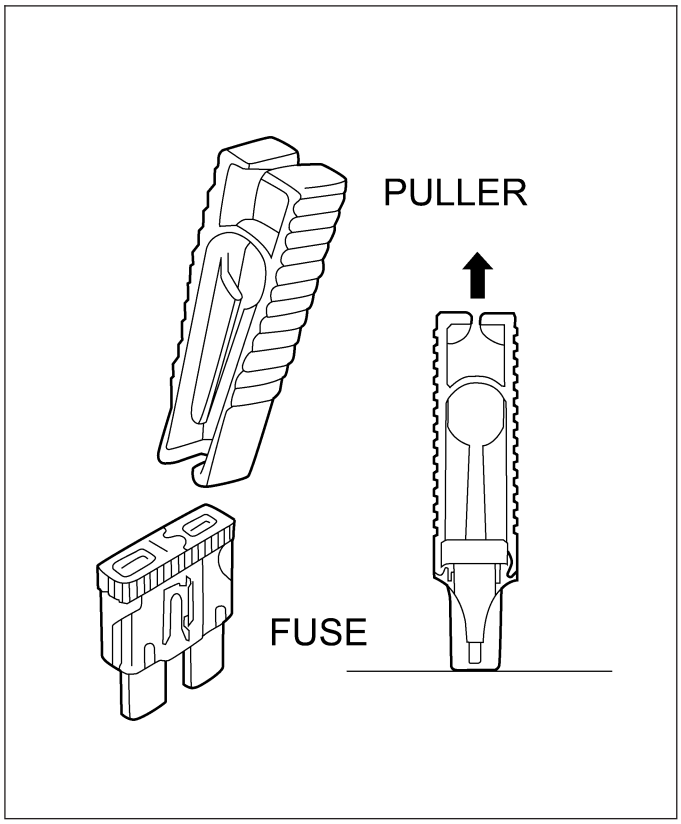

Downloaded from www.Manualslib.com manuals search engine

ELECTRICAL COMPONENTS

Battery Cable

- Before disconnecting connectors or removing electrical parts, disconnect the negative battery cable.

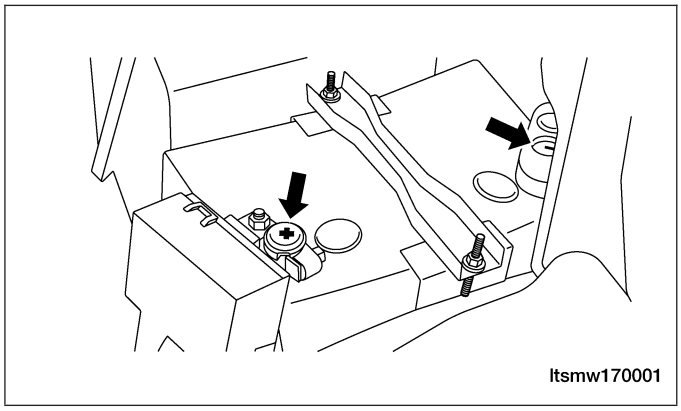

Sensors, Switches, and Relays

- Handle sensors, switches and relays carefully. Do not drop them or strike them against other objects.

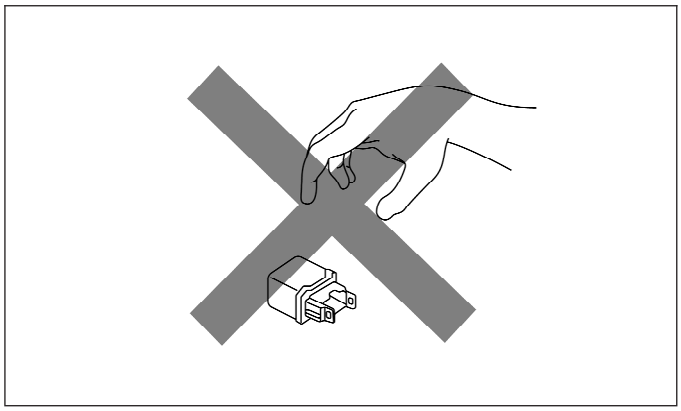

16

Downloaded from www.Manualslib.com manuals search engine

Connectors

Disconnecting Connectors

- When disconnecting 2 connectors, grasp the connectors, not the wires.

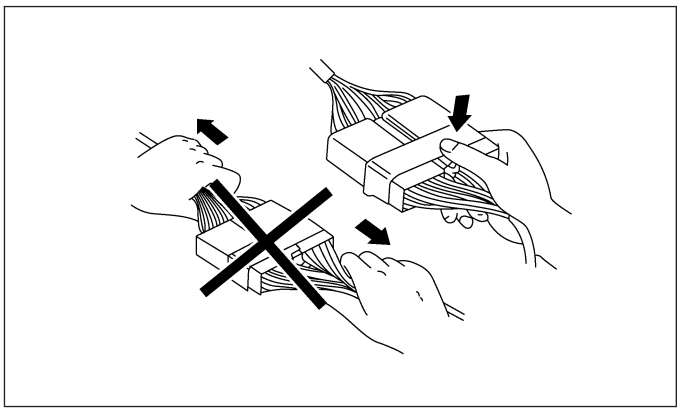

- Connectors can be disconnected by pressing or pulling the lock lever as shown.

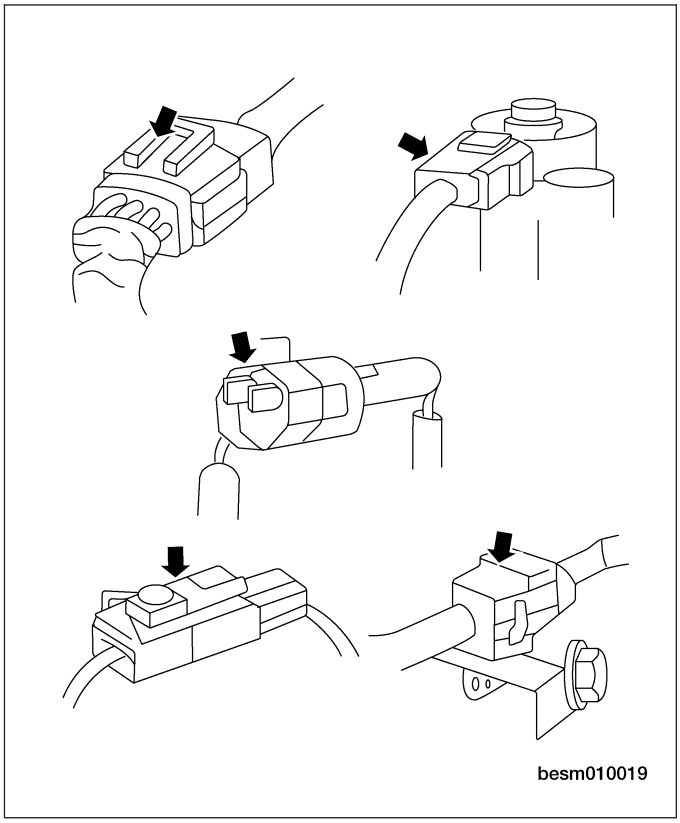

Downloaded from www.Manualslib.com manuals search engine

Locking Connector

- When locking connectors, listen for a click indicating they are securely locked.

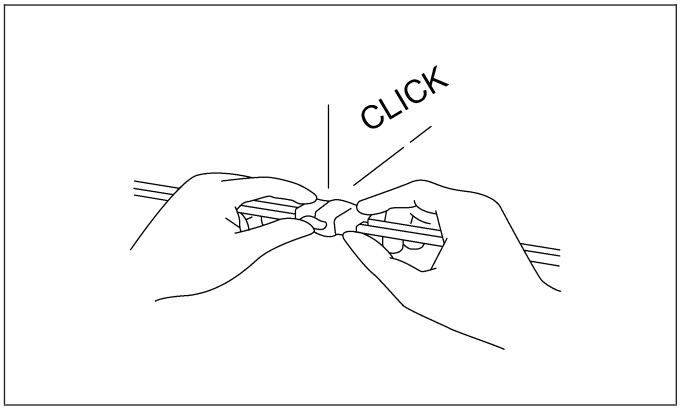

Connector Terminals

- Pull lightly on individual wires to check that they are secured in the terminal.

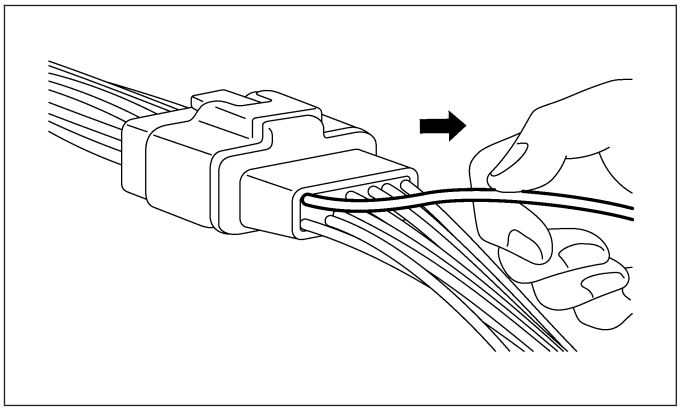

Connector/Terminal Replacement

- Use the appropriate tools to remove a terminal as shown. While installing a terminal, be sure to insert it until it locks securely.
- Insert a thin piece of metal from the terminal side of the connector and with the terminal locking tab pressed down, pull the terminal out from the connector.

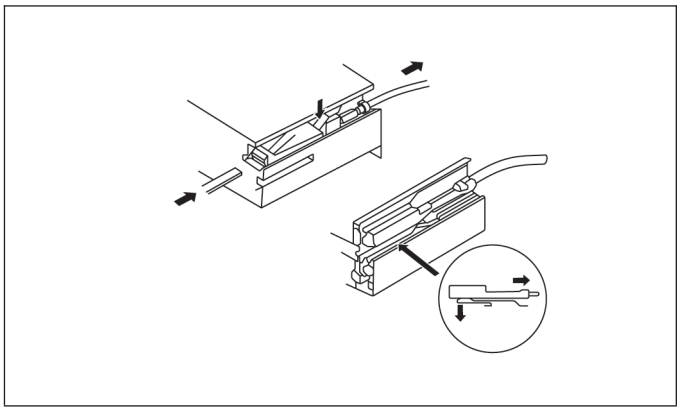

Downloaded from www.Manualslib.com manuals search engine

VEHICLE POWER DISTRIBUTION

GENERAL INFORMATION 16-13
Description 16-13
Operation 16-13

ELECTRICAL SCHEMATICS 16-14
Electrical Schematics 16-14

Downloaded from www.Manualslib.com manuals search engine

GENERAL INFORMATION

Description

The power distribution system is designed to provide safe, reliable, centralized and convenient access to the distribution of the electrical power required to operate all vehicle electrical and electronic systems.

The following components are used for power distribution:

- Battery
- Power Fuse Box
- Body Fuse and Relay Box
- Front Fuse and Relay Box
- Ignition Switch
- Fuses
- Circuit Breakers
- Relays

Operation

The power distribution system operates all electrical and electronic engine, transmission, chassis, safety, comfort and convenience systems.

Downloaded from www.Manualslib.com manuals search engine

Electrical Schematics

The power distribution electrical schematics include all wiring information detailed on the power side of all vehicle circuits. This is helpful when attempting to troubleshoot a specific electrical failure, and shows connector pin-out information and splices.

Power Distribution (Page 1 of 13)

POWER DISTRIBUTION ELECTRICAL SCHEMATIC

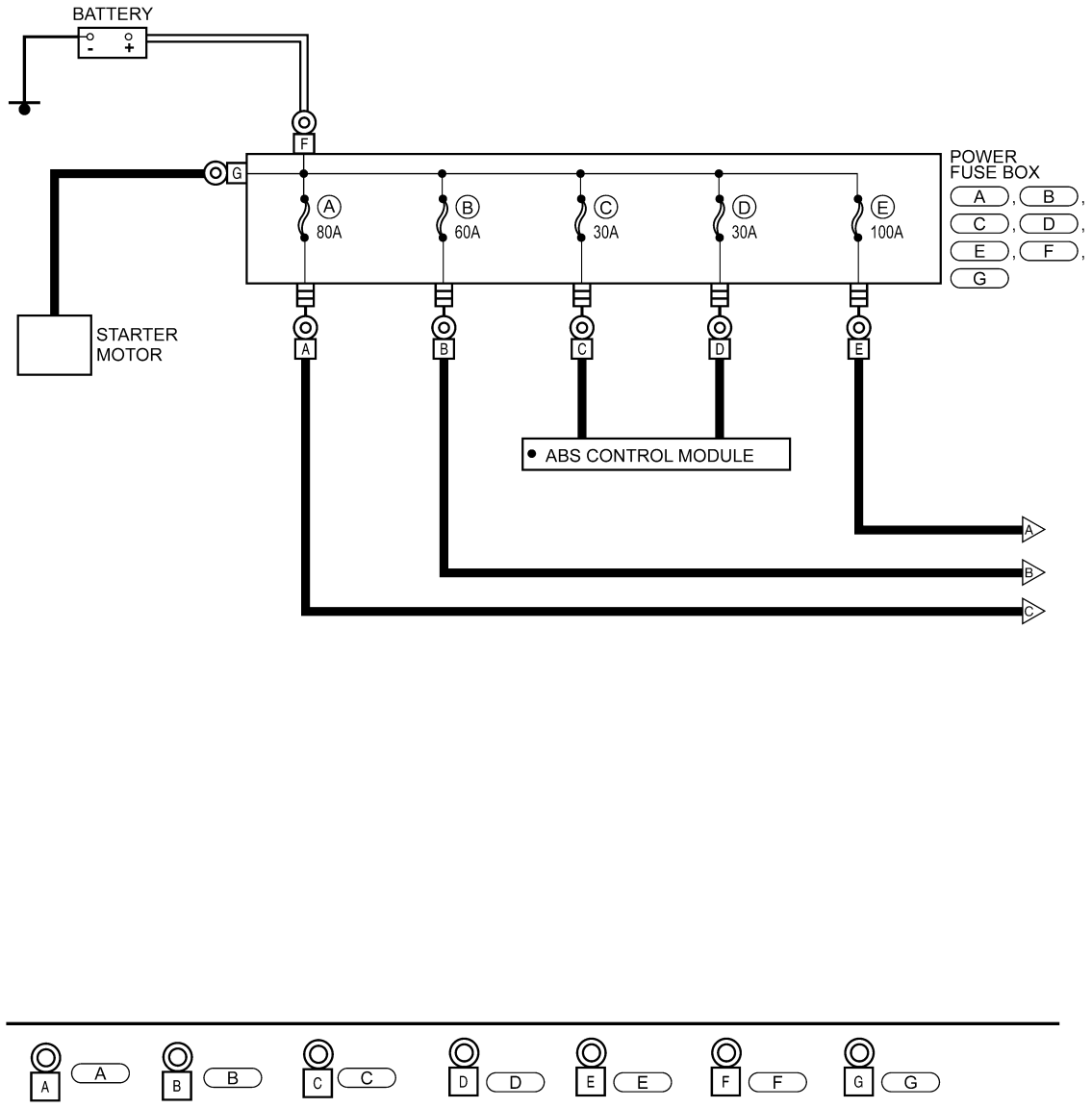

ltsmw170021t

Downloaded from www.Manualslib.com manuals search engine

Power Distribution (Page 2 of 13)

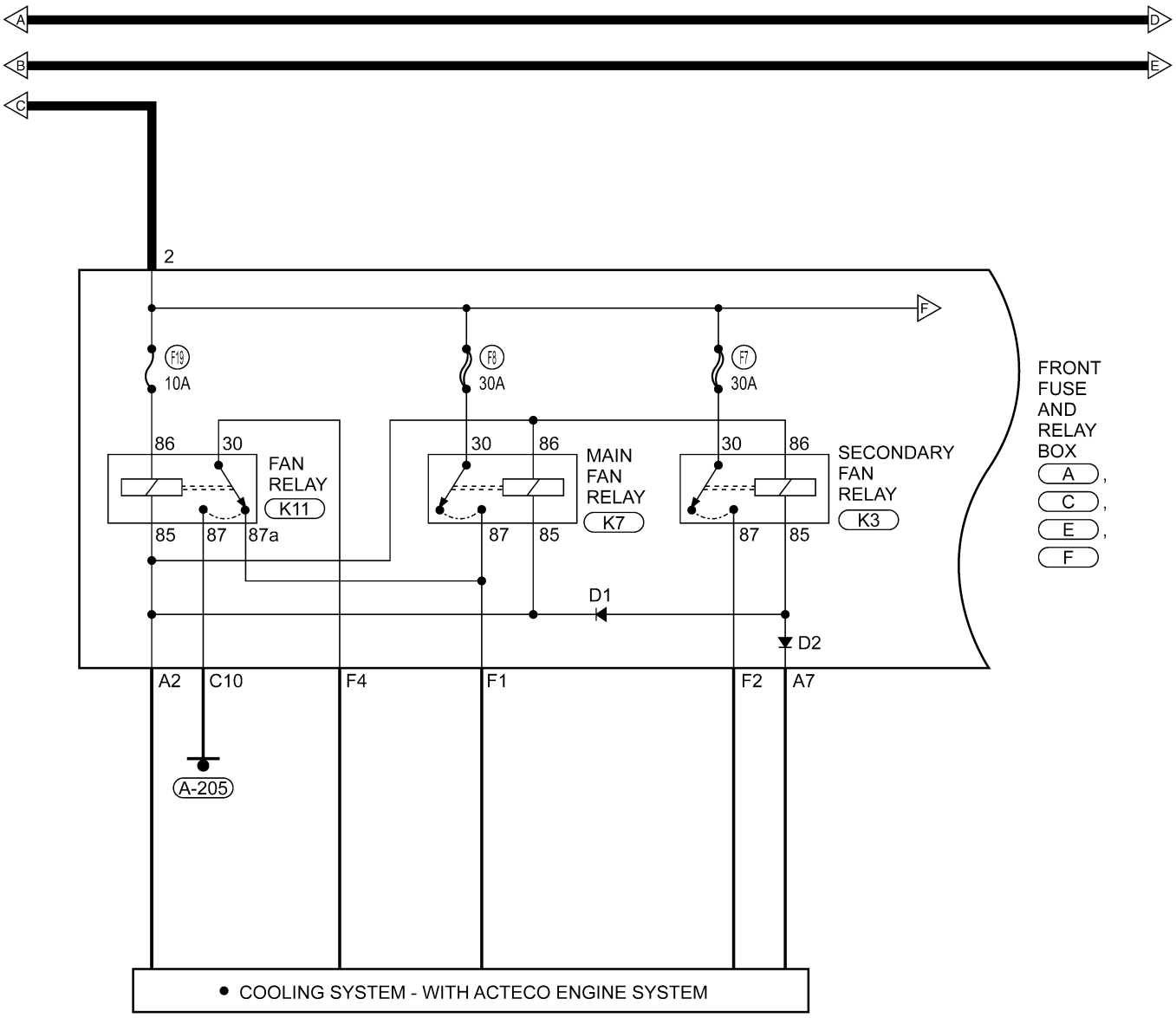

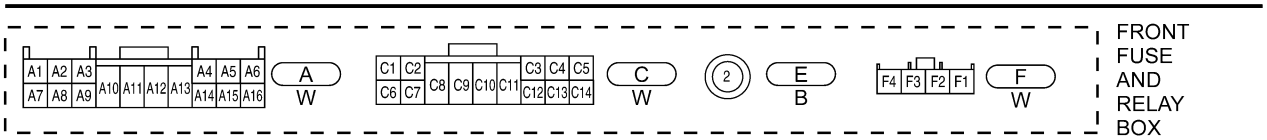

Itsmw170022t

Downloaded from www.Manualslib.com manuals search engine

Power Distribution (Page 3 of 13)

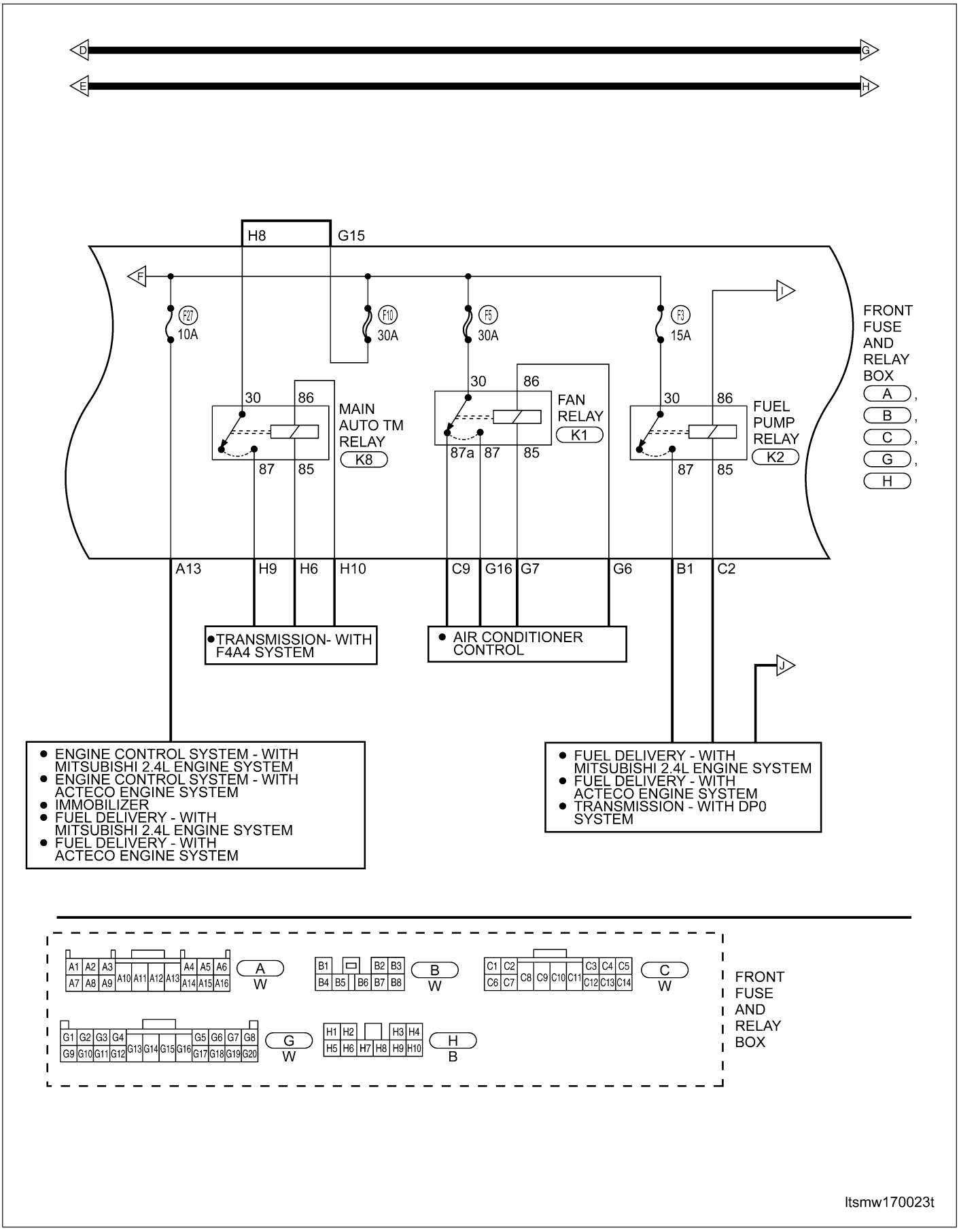

Downloaded from www.Manualslib.com manuals search engine

Power Distribution (Page 4 of 13)

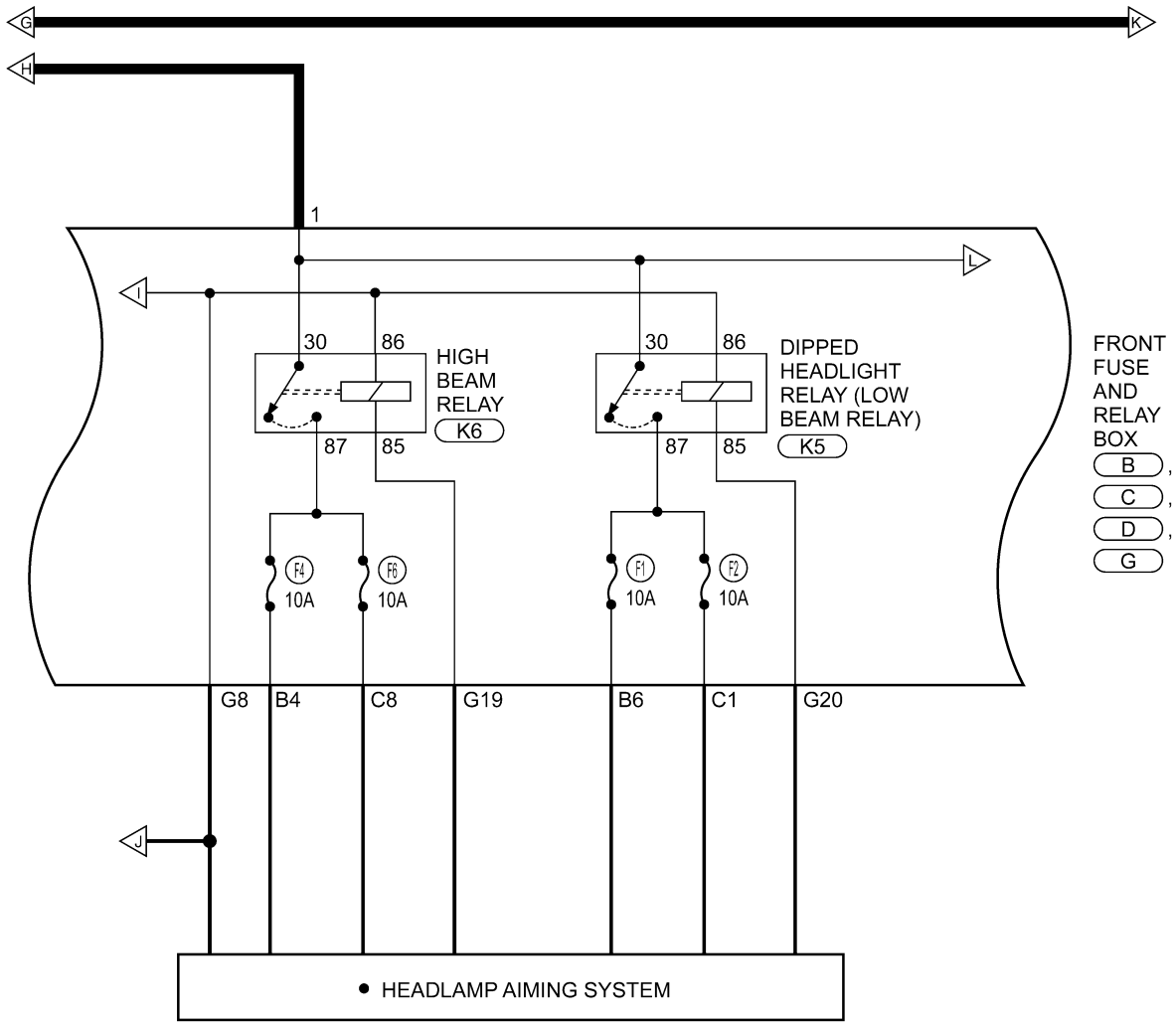

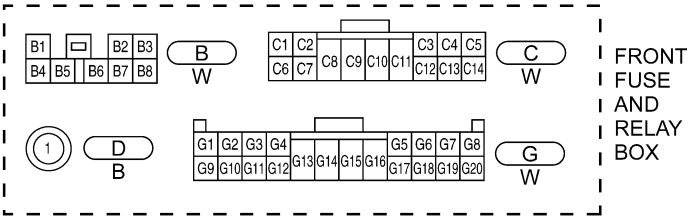

ltsmw170024t

Downloaded from www.Manualslib.com manuals search engine

Power Distribution (Page 5 of 13)

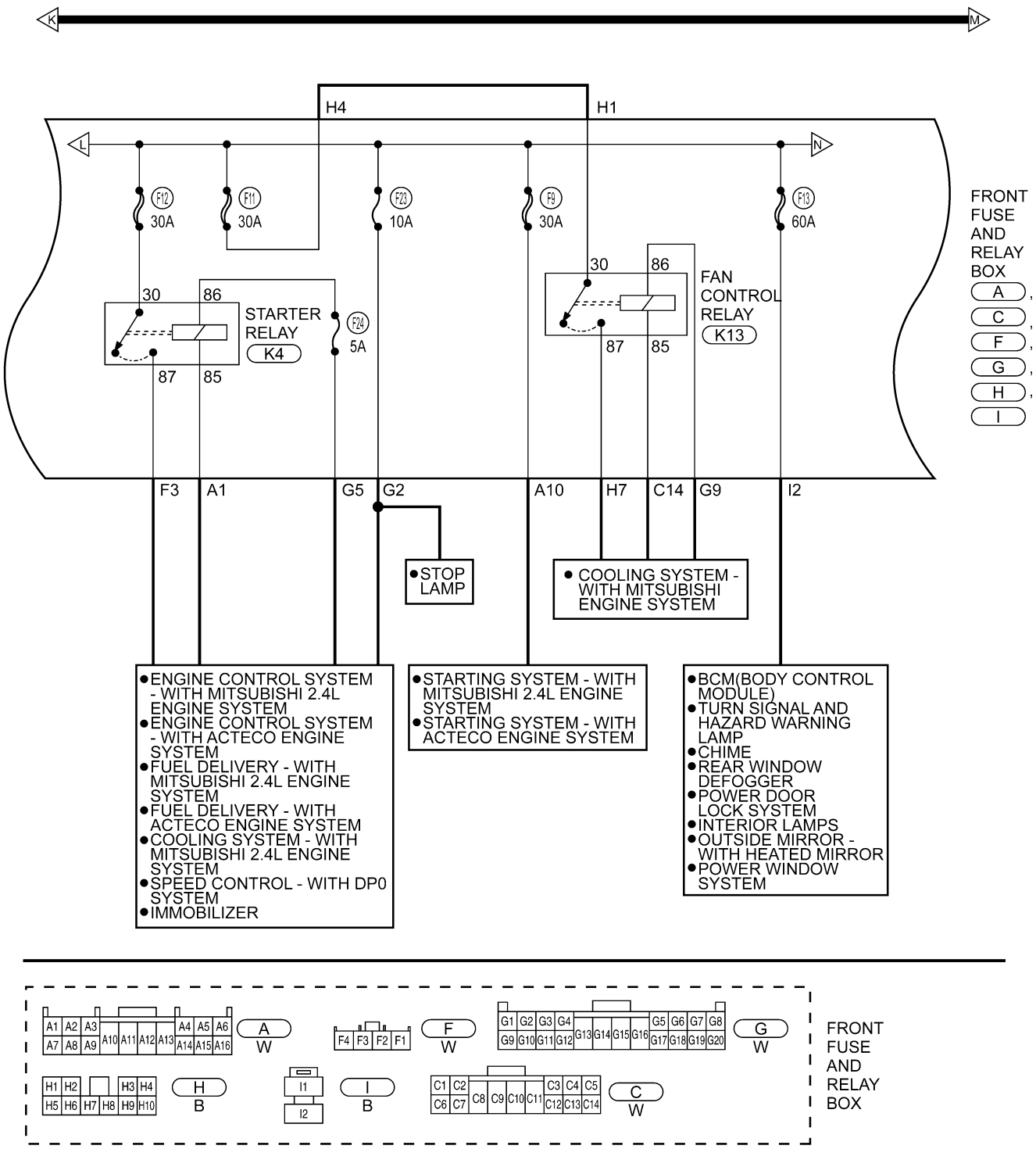

Downloaded from www.Manualslib.com manuals search engine

Power Distribution (Page 6 of 13)

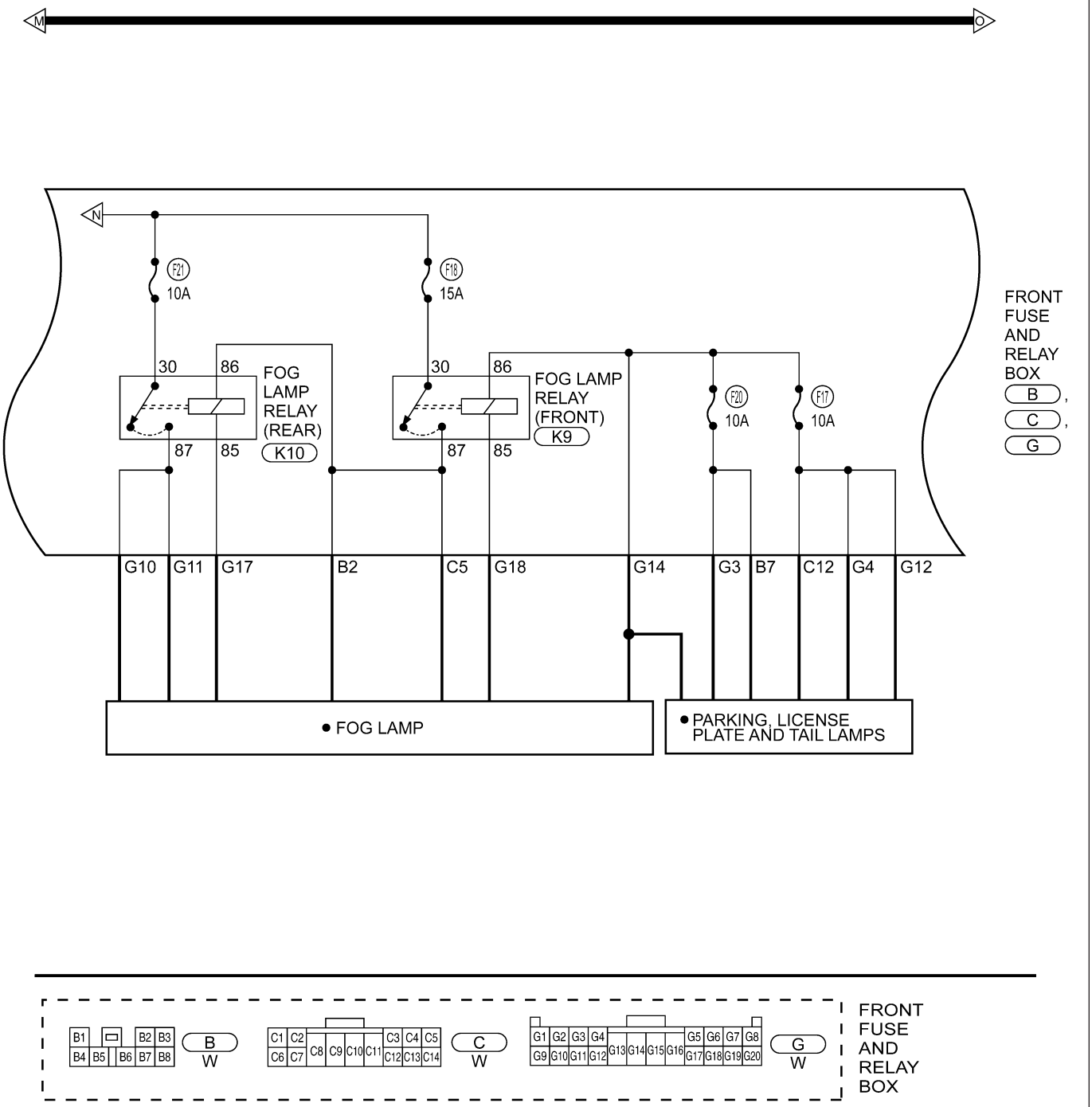

ltsmw170026t

Downloaded from www.Manualslib.com manuals search engine

Power Distribution (Page 7 of 13)

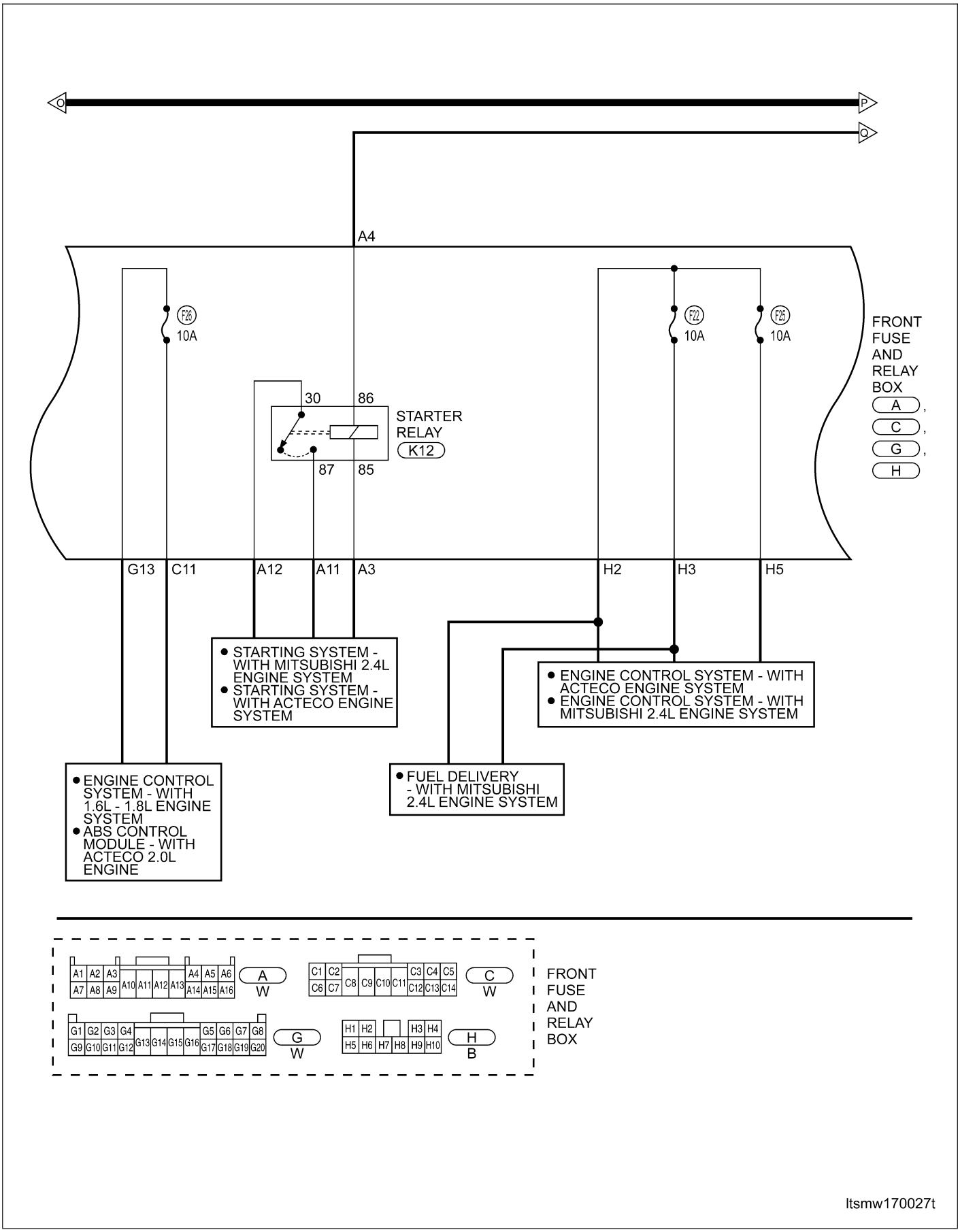

Downloaded from www.Manualslib.com manuals search engine

Power Distribution (Page 8 of 13)

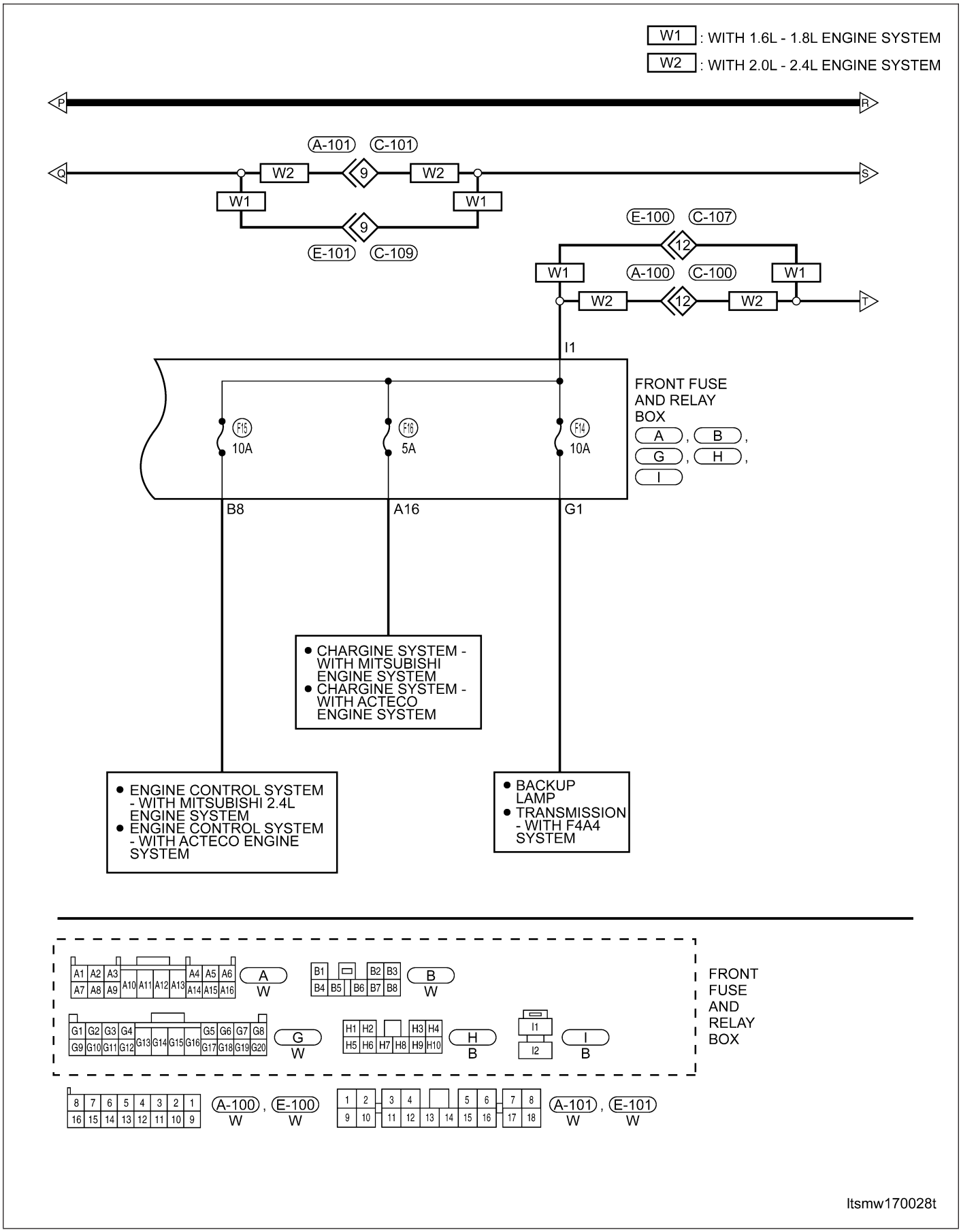

Downloaded from www.Manualslib.com manuals search engine

Power Distribution (Page 9 of 13)

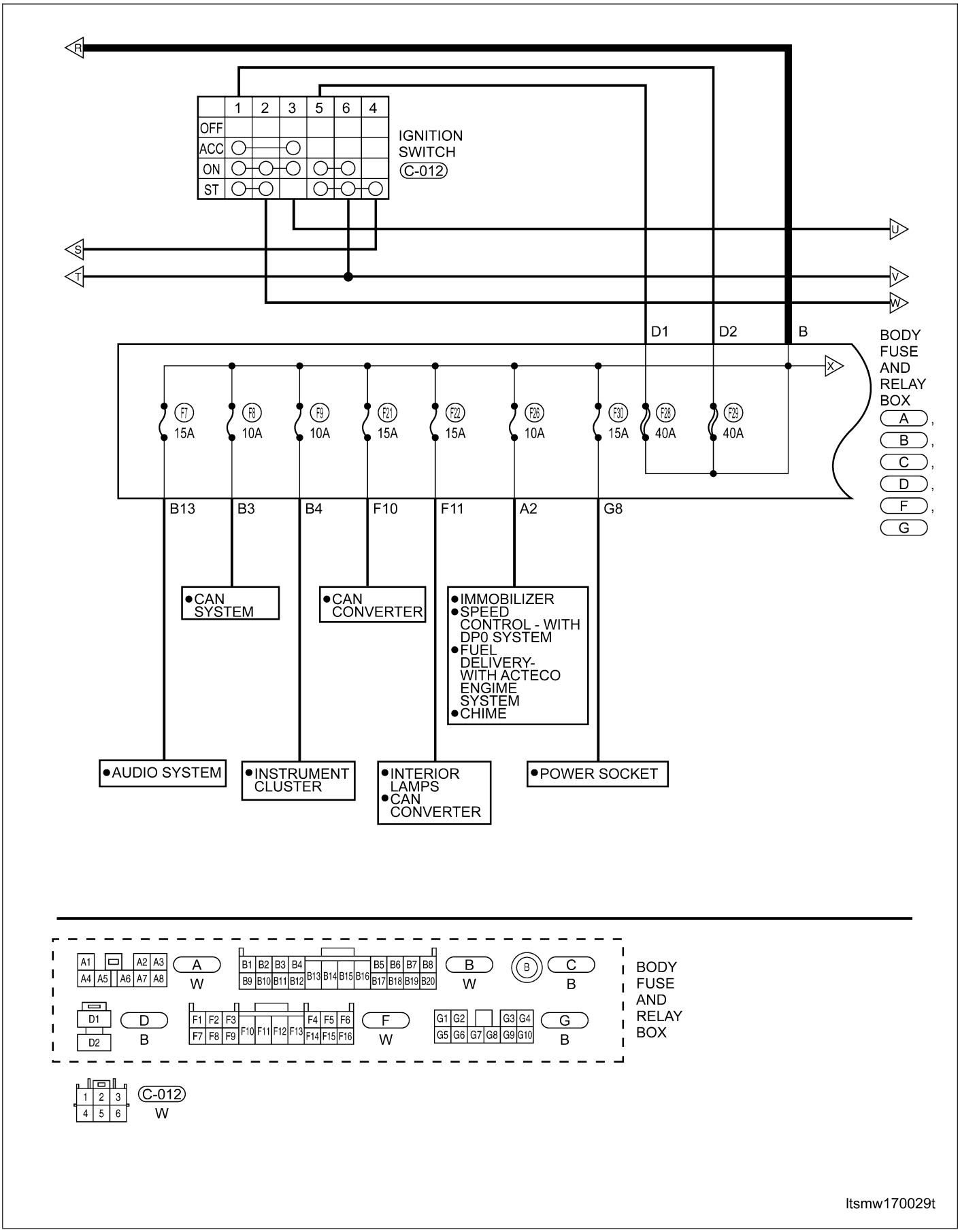

Downloaded from www.Manualslib.com manuals search engine

Power Distribution (Page 10 of 13)

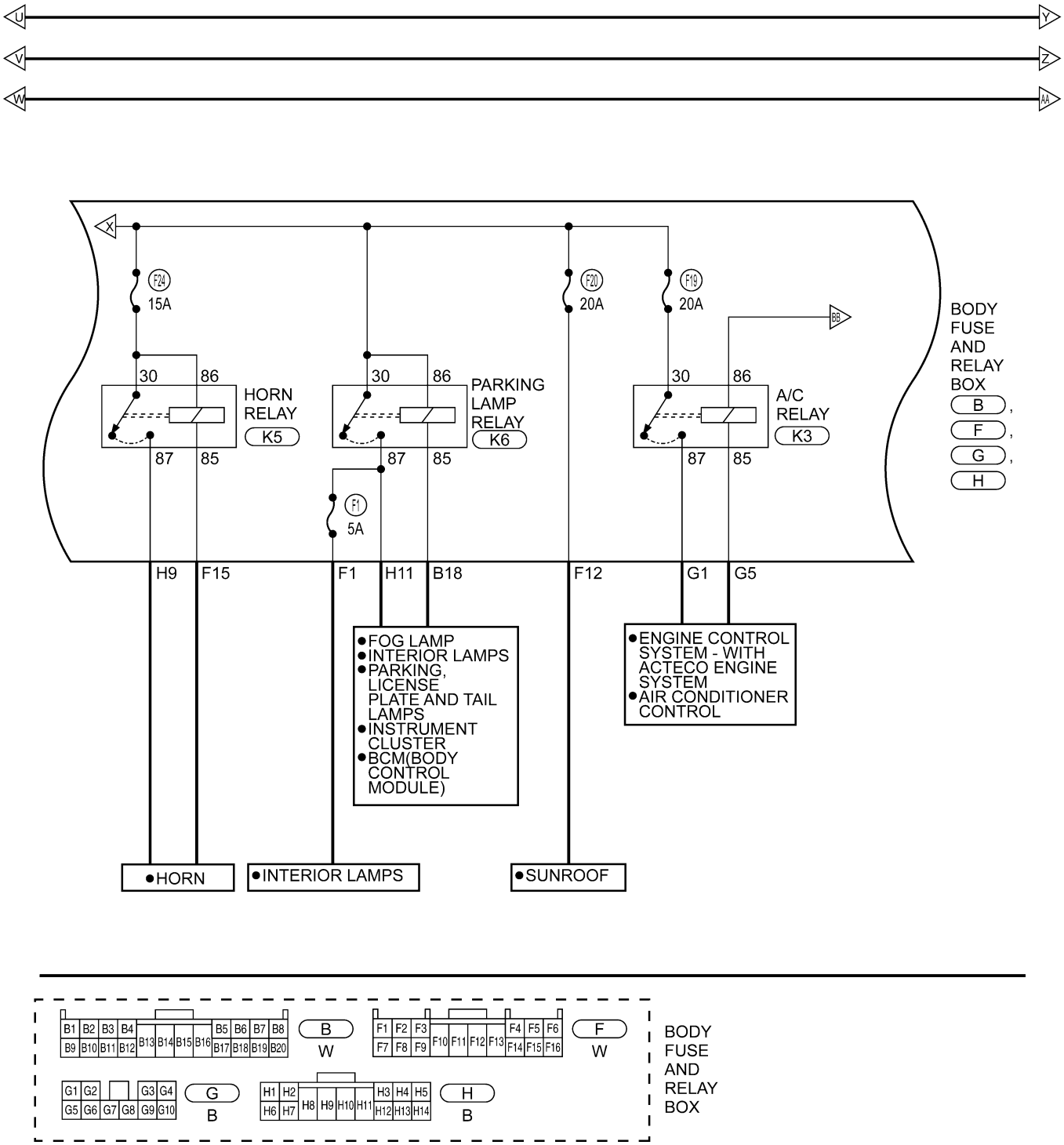

ltsmw170030t

Downloaded from www.Manualslib.com manuals search engine

Power Distribution (Page 11 of 13)

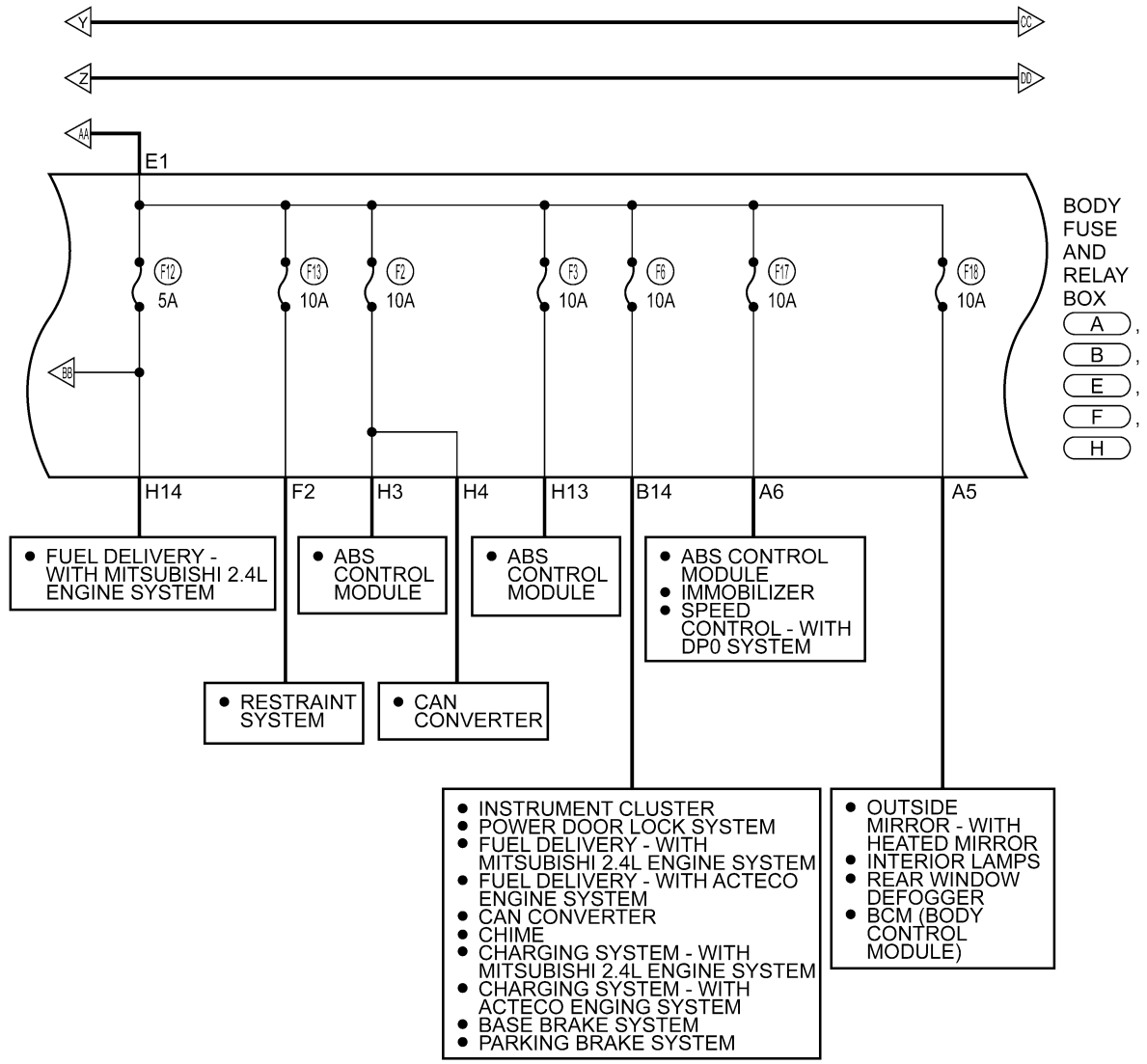

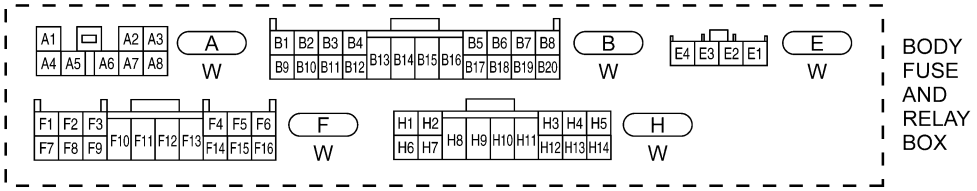

ltsmw170031t

Downloaded from www.Manualslib.com manuals search engine

Power Distribution (Page 12 of 13)

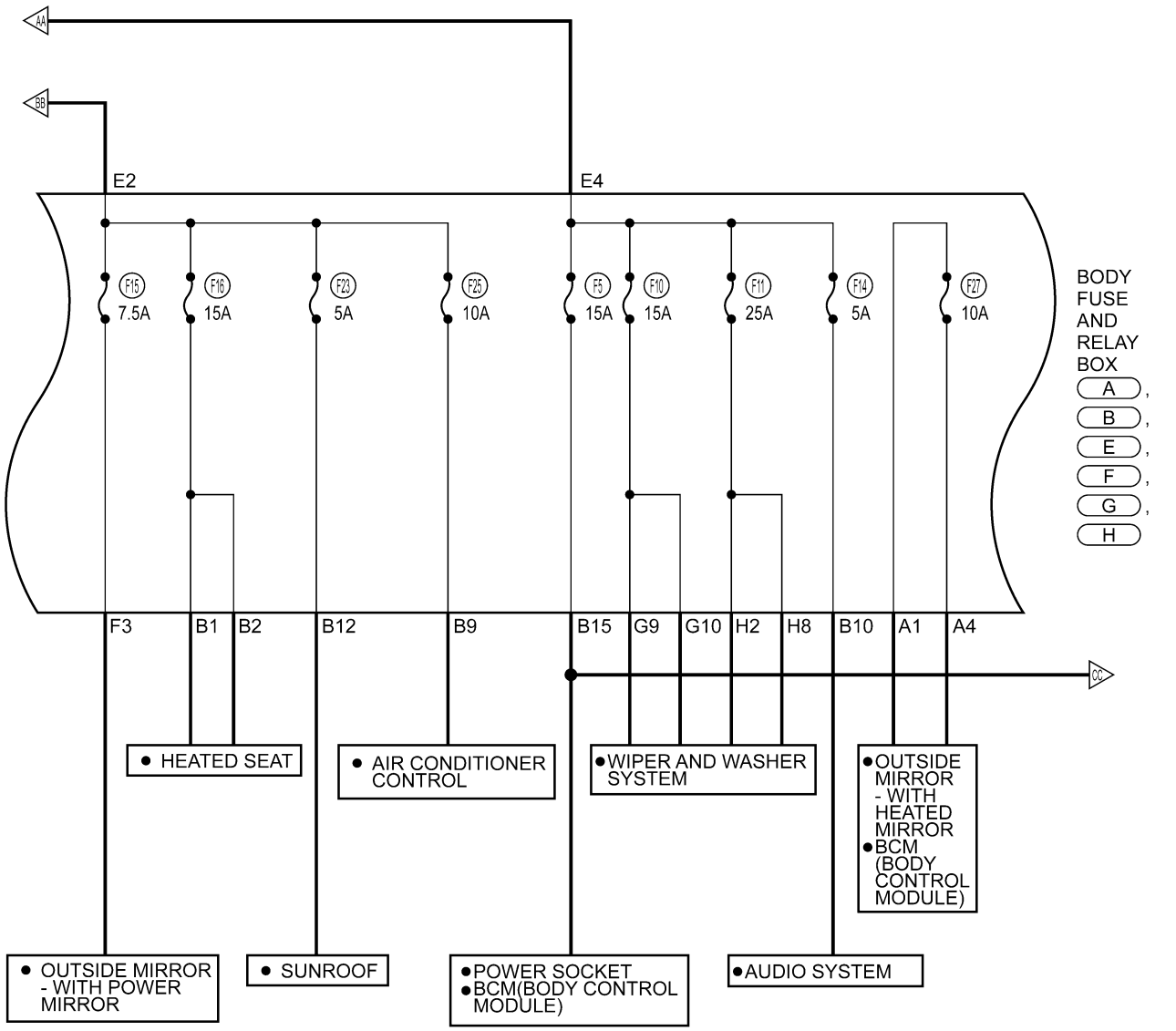

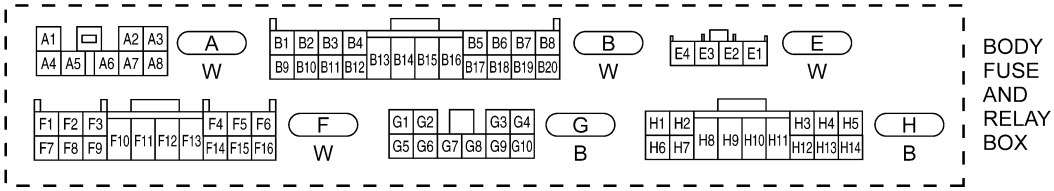

ltsmw170032t

Downloaded from www.Manualslib.com manuals search engine

Power Distribution (Page 13 of 13)

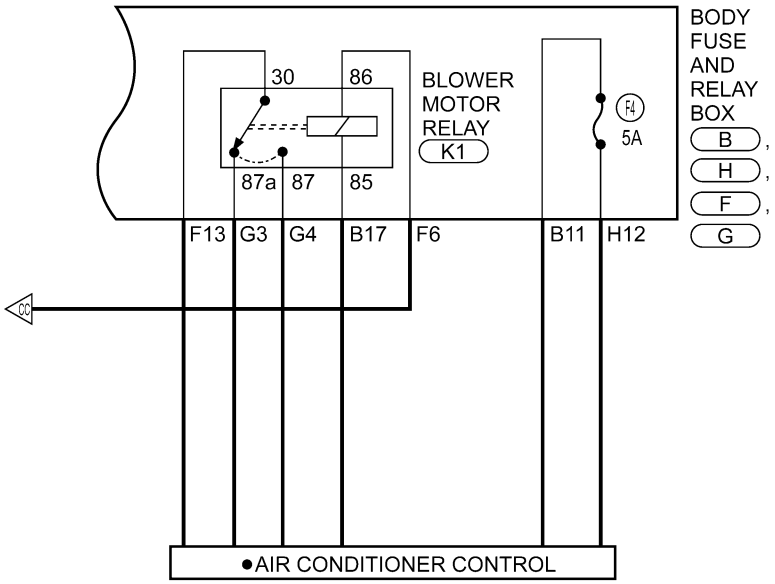

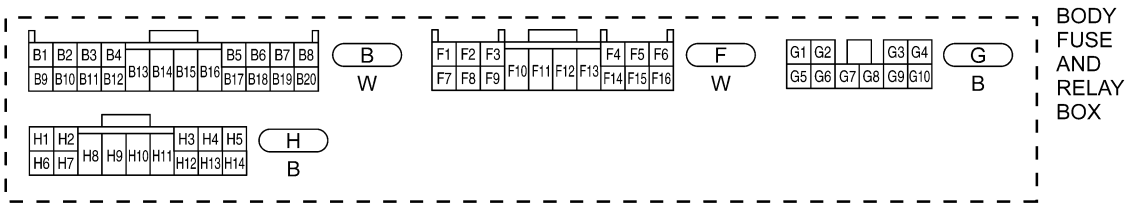

ltsmw170033t

Downloaded from www.Manualslib.com manuals search engine

VEHICLE GROUND DISTRIBUTION

GENERAL INFORMATION 16-28
Description 16-28
Operation 16-28

ELECTRICAL SCHEMATICS 16-29
Electrical Schematics 16-29

Downloaded from www.Manualslib.com manuals search engine

GENERAL INFORMATION

Description

The ground distribution system is designed to provide centralized and convenient ground locations for the entire vehicle electrical system.

Operation

The ground distribution system provides a grounding path for all electrical and electronic engine, transmission, chassis, safety, comfort and convenience systems.

Downloaded from www.Manualslib.com manuals search engine

Electrical Schematics

The ground distribution electrical schematics include all wiring information detailed on the ground side of all vehicle circuits. This is helpful when attempting to troubleshoot a specific electrical failure, and shows connector pin-out information and splices.

Ground Distribution (Page 1 of 8)

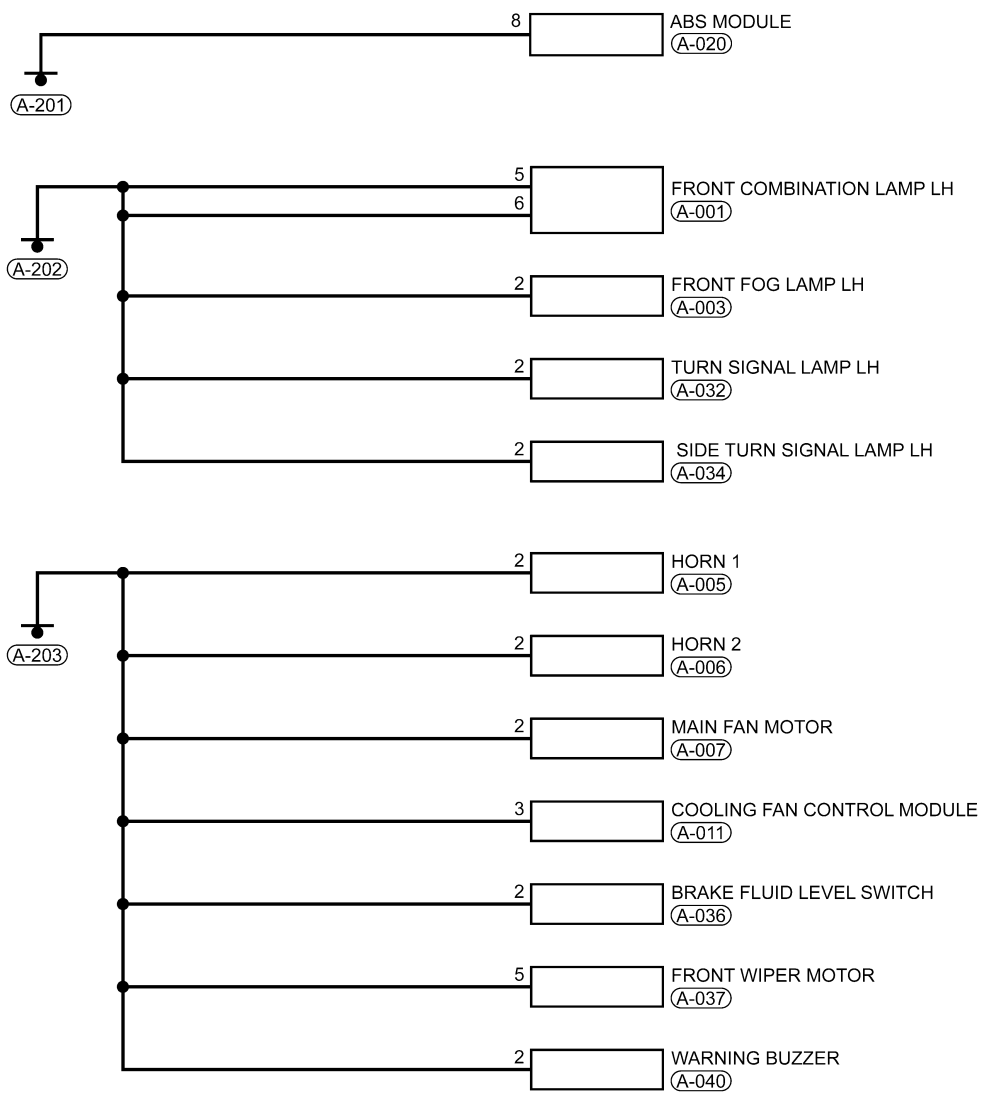

ltsmw170040t

16

Downloaded from www.Manualslib.com manuals search engine

Ground Distribution (Page 2 of 8)

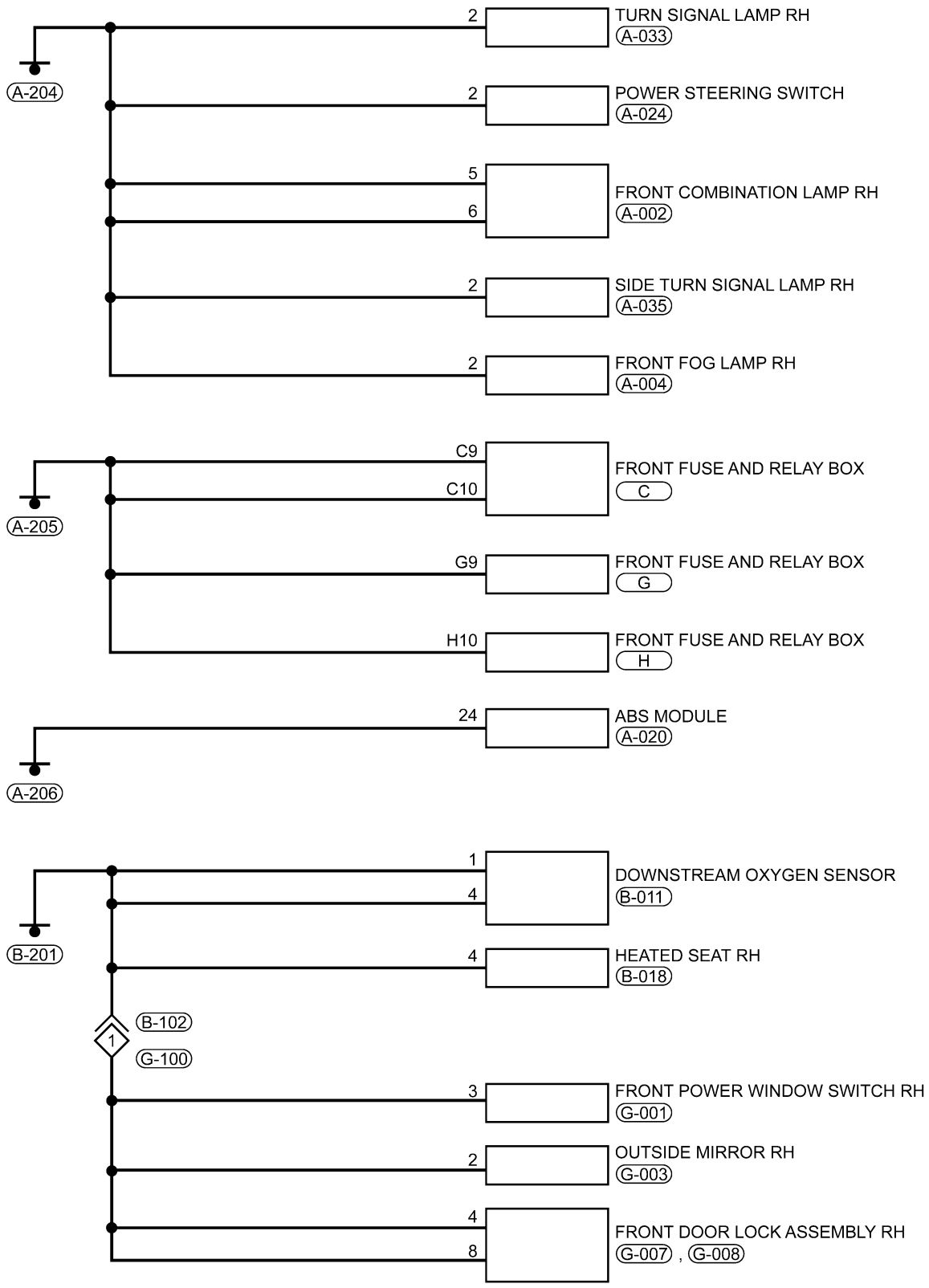

ltsmw170041t

Downloaded from www.Manualslib.com manuals search engine

Ground Distribution (Page 3 of 8)

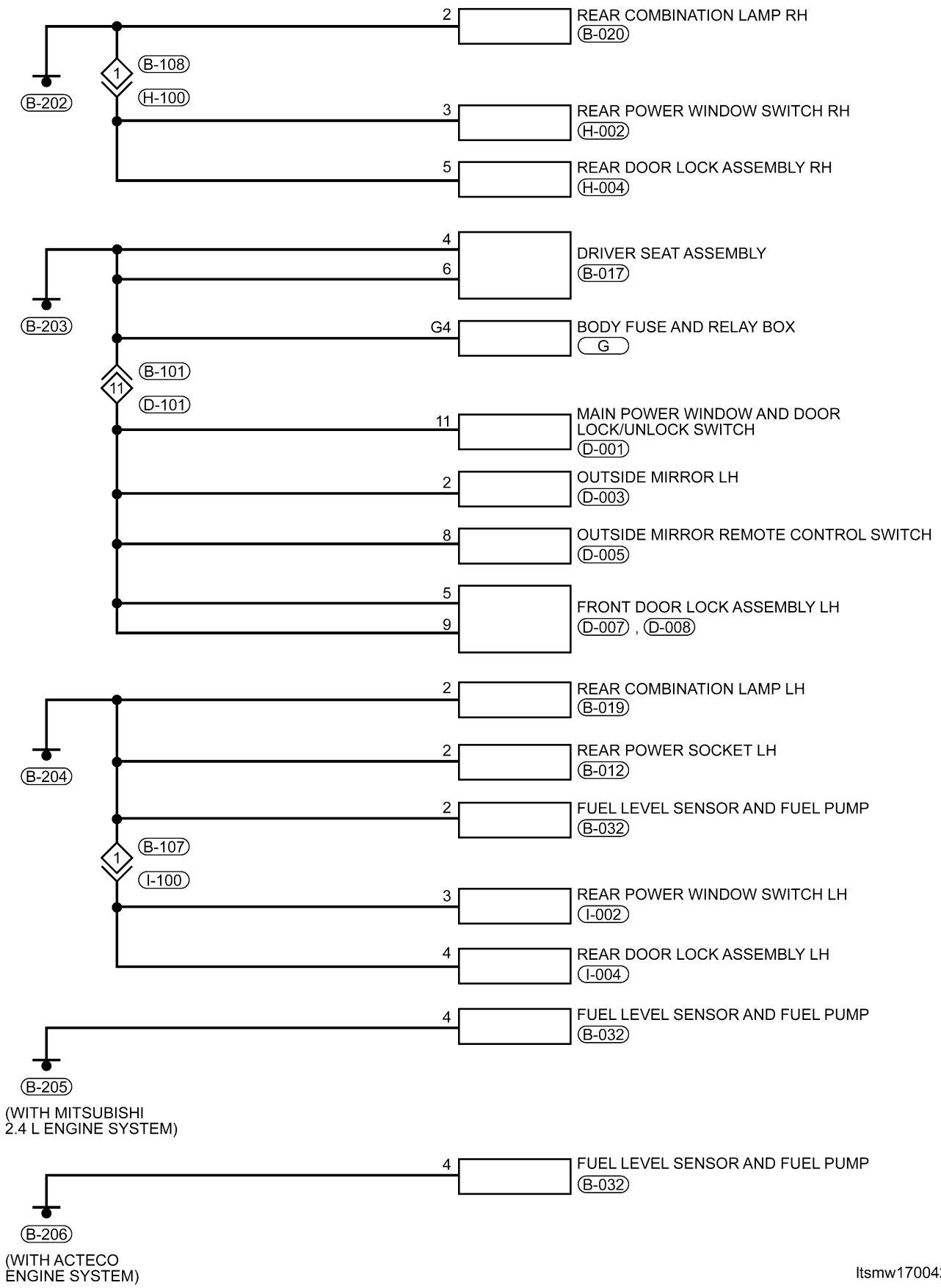

16

Downloaded from www.Manualslib.com manuals search engine

Ground Distribution (Page 4 of 8)

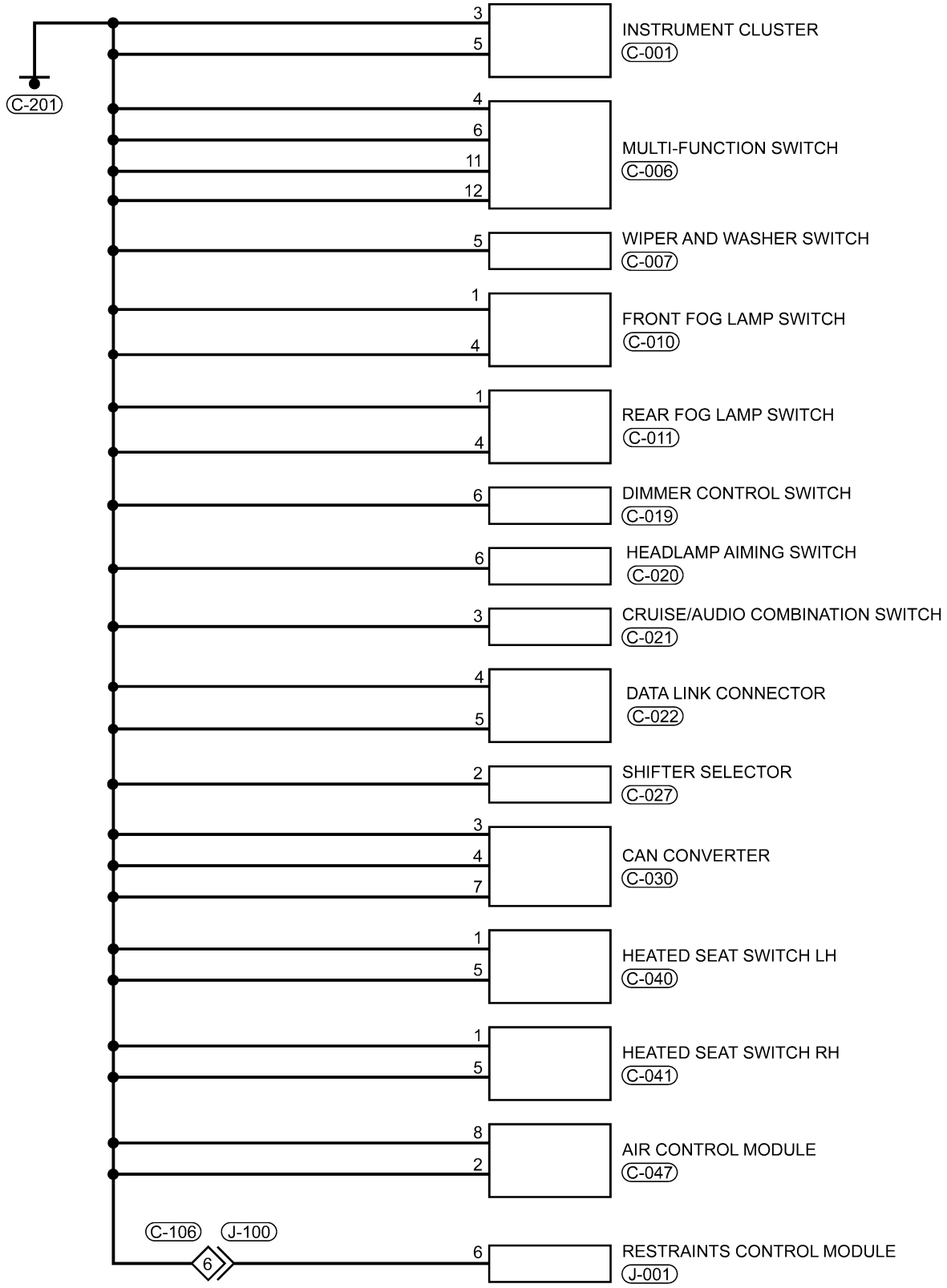

Downloaded from www.Manualslib.com manuals search engine

Ground Distribution (Page 5 of 8)

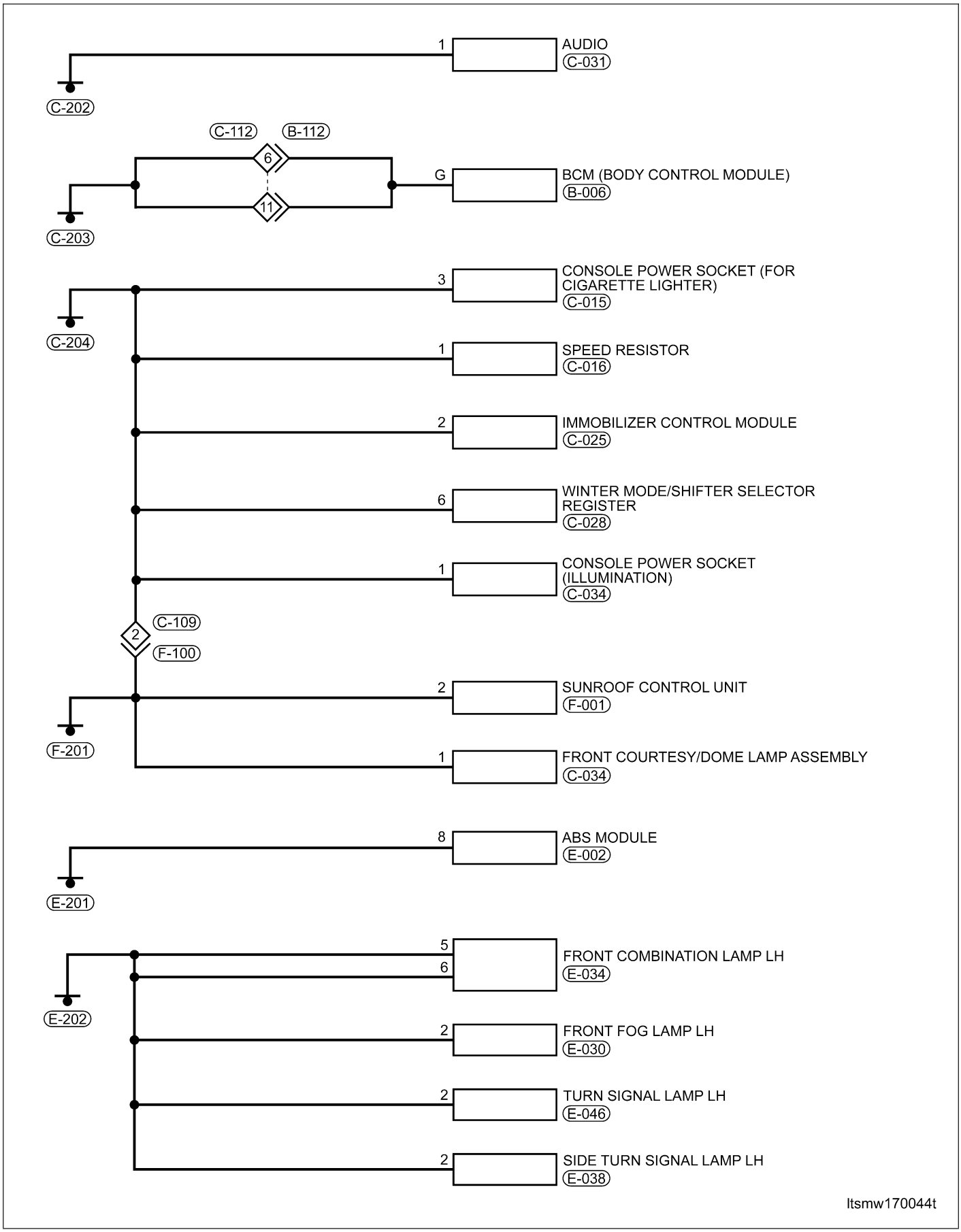

16

Downloaded from www.Manualslib.com manuals search engine

Ground Distribution (Page 6 of 8)

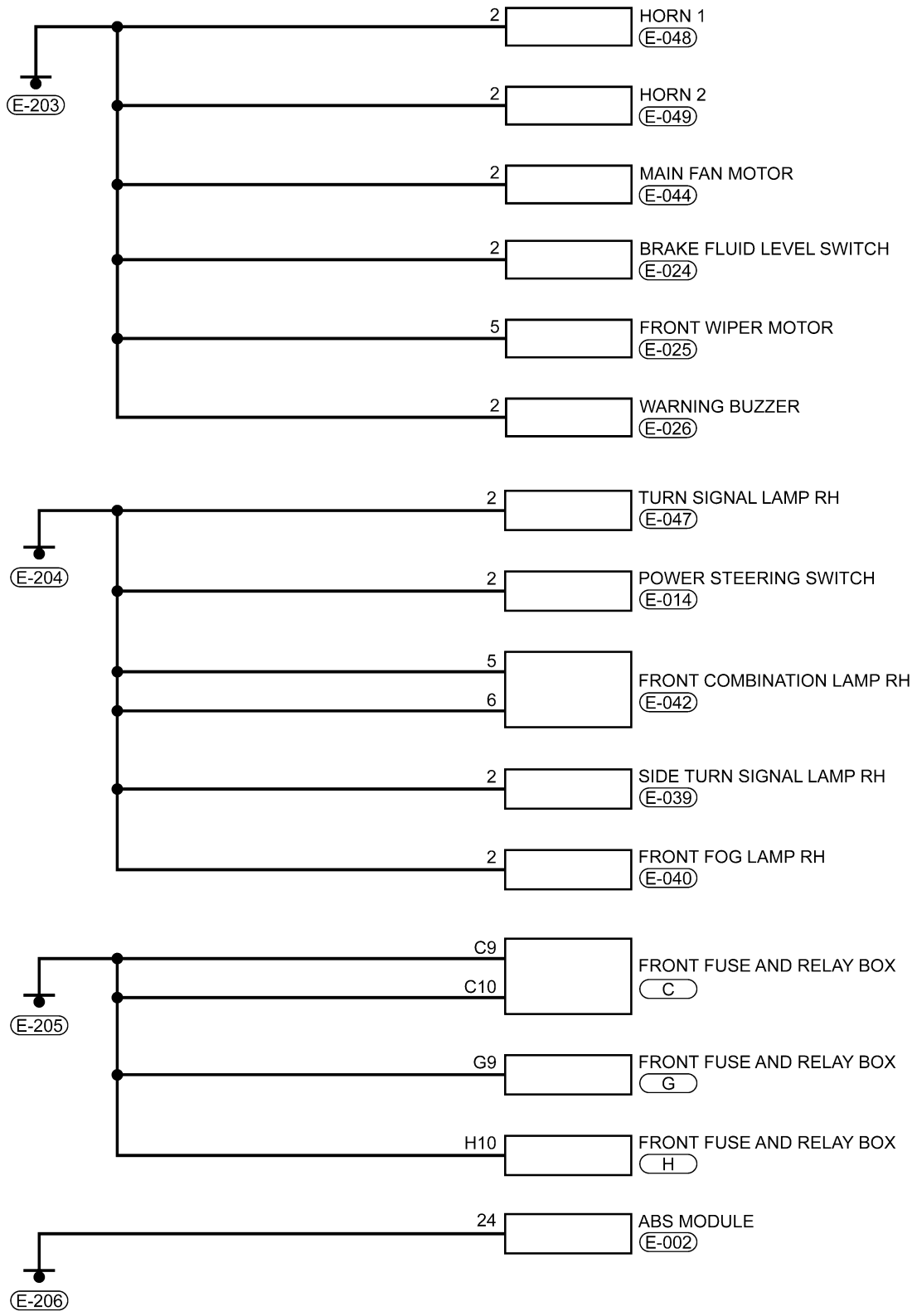

ltsmw170045t

Downloaded from www.Manualslib.com manuals search engine

Ground Distribution (Page 7 of 8)

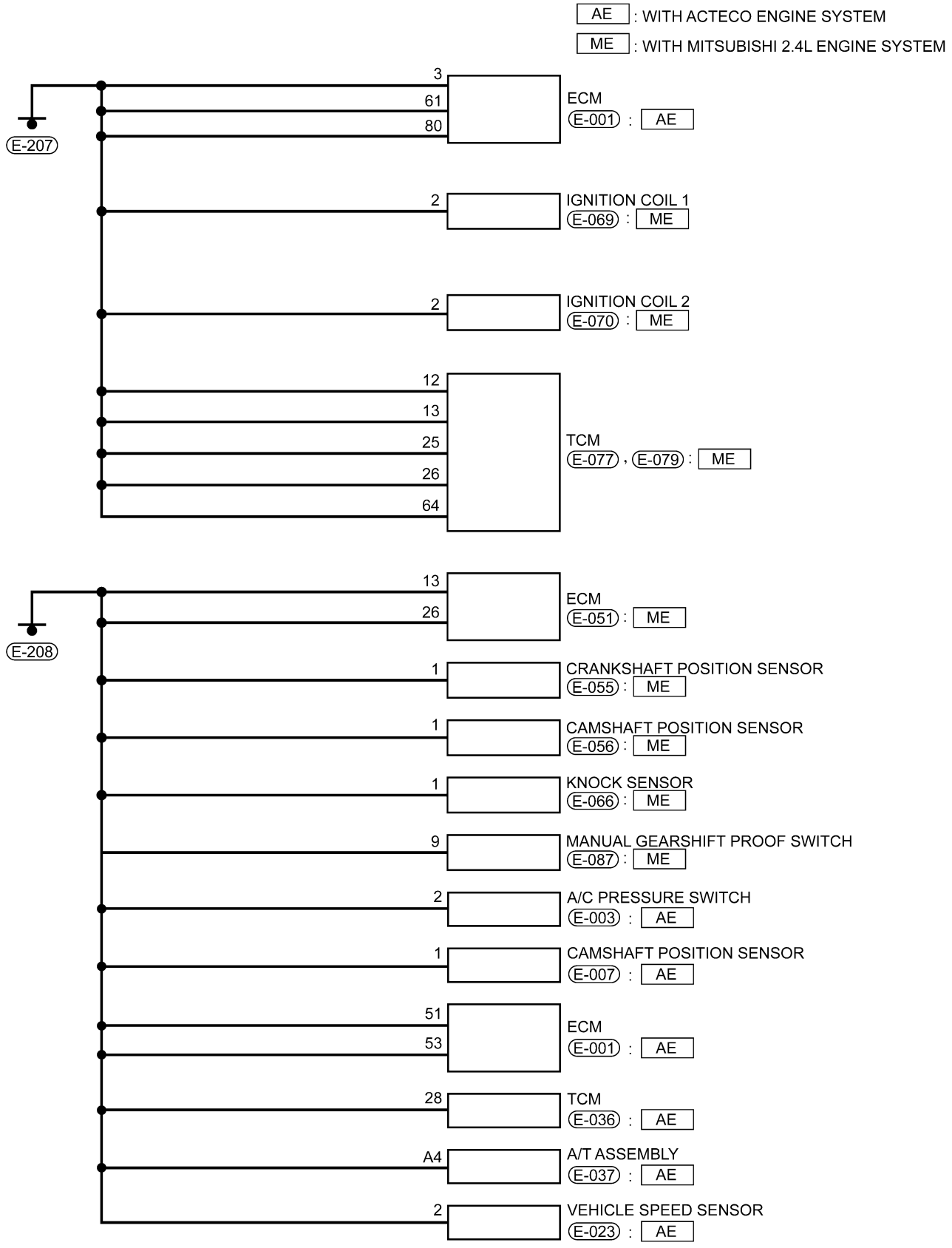

16

Downloaded from www.Manualslib.com manuals search engine

Ground Distribution (Page 8 of 8)

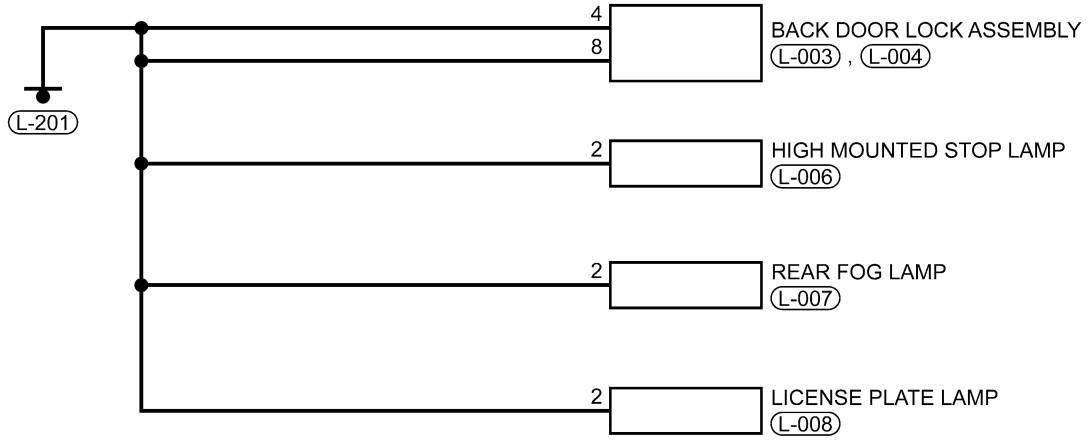

ltsmw170047t

Downloaded from www.Manualslib.com manuals search engine

VEHICLE FUSE BOX INFORMATION

GENERAL INFORMATION 16-38
Description 16-38
Operation 16-38

Power Fuse Box 16-38
Description 16-38
Operation 16-38
Overview 16-39

Front Fuse and Relay Box 16-40
Description 16-40
Operation 16-40
Overview 16-41

Body Fuse and Relay Box 16-42
Description 16-42
Operation 16-42
Overview 16-43

Downloaded from www.Manualslib.com manuals search engine

GENERAL INFORMATION

Description

In order to ensure the normal operation of the system, every electrical system is equipped with fuses and relays. The fuses and relays are stored in the fuse boxes.

The vehicle fuses and relays are located in the following locations:

- Power Fuse Box
- Front Fuse and Relay Box
- Body Fuse and Relay Box

Operation

When replacing a open fuse, it is important to use only a fuse having the correct amperage rating. The use of a fuse with a rating other than indicated may result in a dangerous electrical system overload. If a properly rated fuse continues to open, it indicates a problem in the circuit that must be corrected.

Power Fuse Box

Description

The power fuse box is located on the side of the battery. All of the electrical current distributed throughout the vehicle is directed through the power fuse box. The power fuse box houses five maxi-type bolt in fuses.

Operation

All of the current from the battery and the generator output enters the power fuse box through the cable and eyelet that are secured with a nut to the power fuse box B(+) terminal stud located on one end of the power fuse box housing. The power fuse box terminal stud cover is unlatched and opened to access the fuses.

Downloaded from www.Manualslib.com manuals search engine

Overview

Power Fuse Box

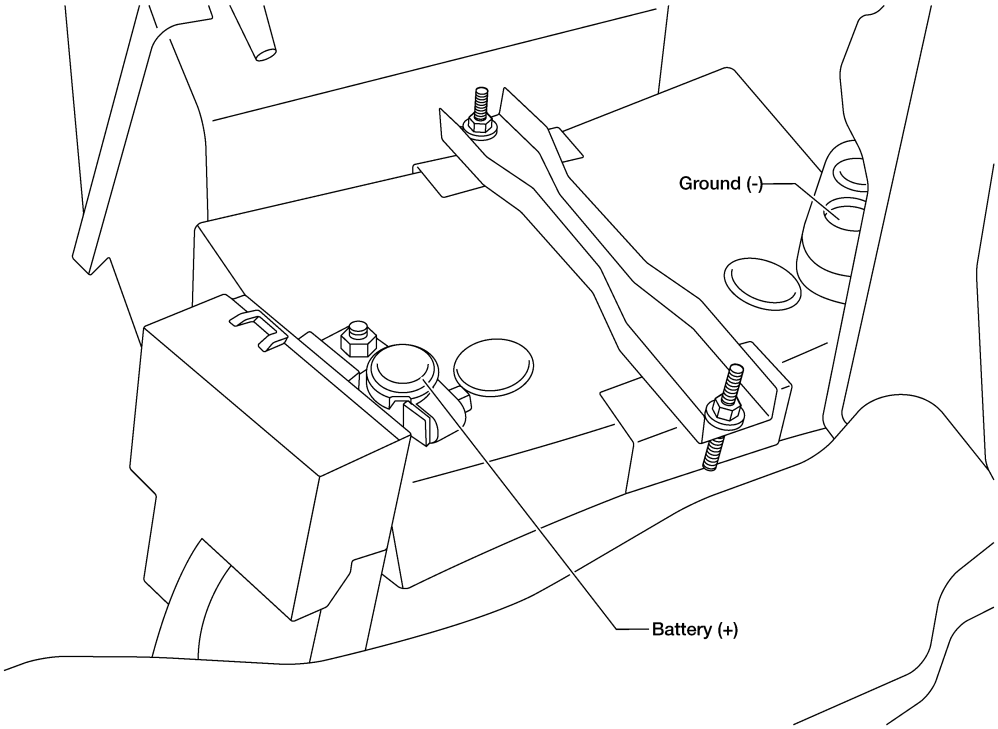

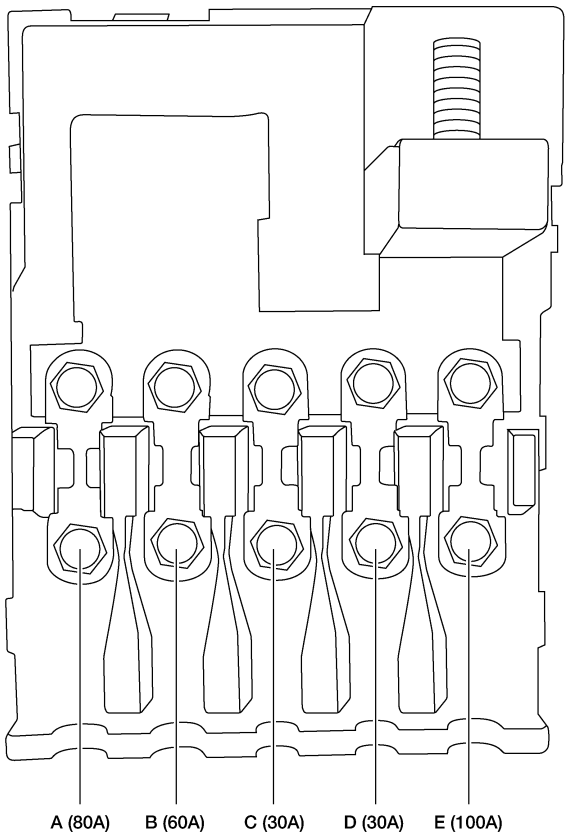

ltsmw170004t

Downloaded from www.Manualslib.com manuals search engine

Front Fuse and Relay Box

Description

The front fuse and relay box houses many of the fuses and relays for the vehicles electrical system. The front fuse and relay box is located on the right side of the engine compartment and under the cowl top of windshield. If the fuses and relays cannot be serviced, it must be replaced as a unit.

Operation

When a circuit fails, the fuse will blow and remove current from the circuit. The front fuse and relay box is equipped with a label that identifies each component. The label is printed on the inside of the cover. The power fuse box identifies the rating of each fuse individually. Turn off the ignition switch, and then replace the fuse.

Downloaded from www.Manualslib.com manuals search engine

Overview

Front Fuse And Relay Box

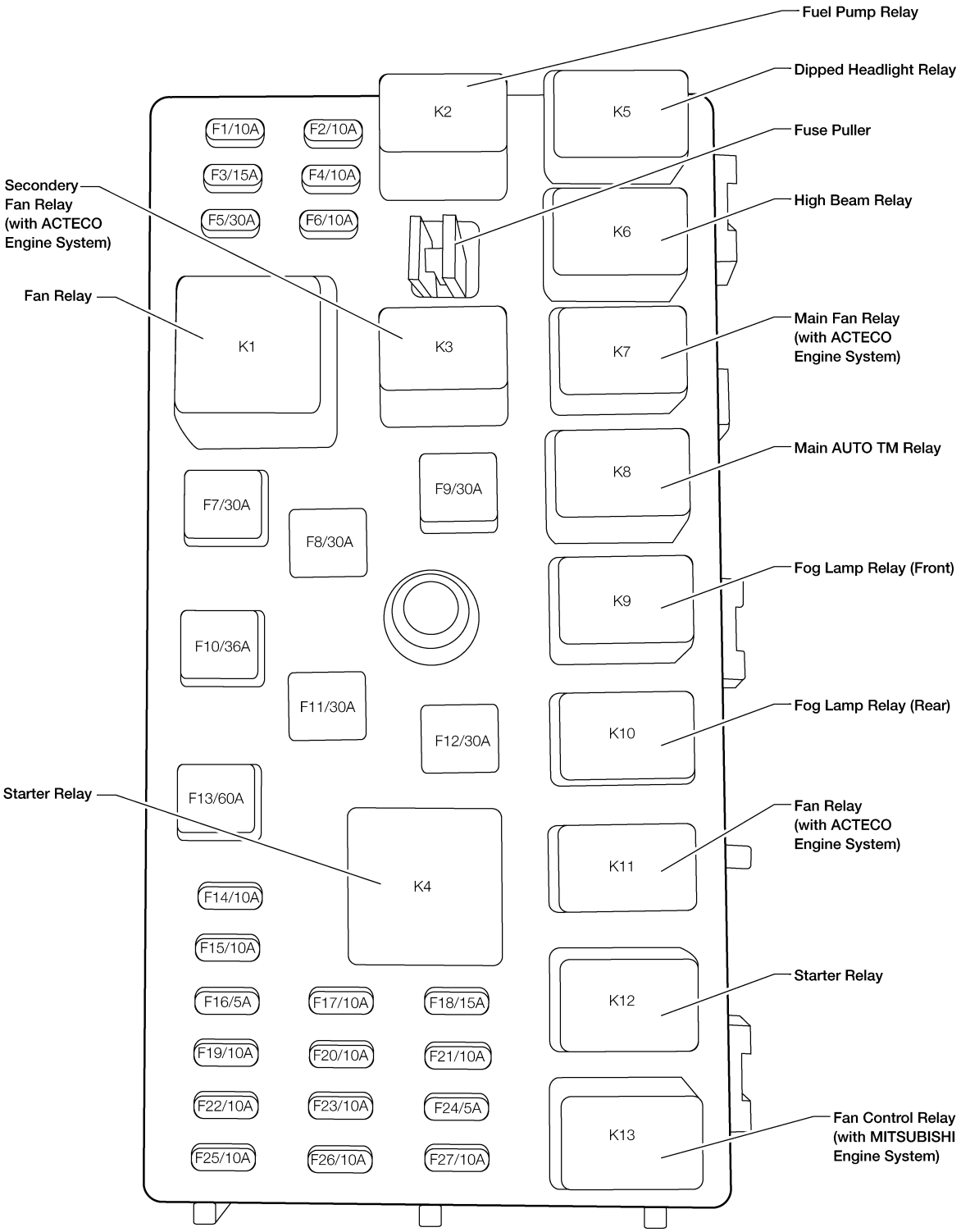

ltsmw170005t

Downloaded from www.Manualslib.com manuals search engine

Body Fuse and Relay Box

Description

The body fuse and relay box houses many of the fuses and relays for the vehicle's electrical system. The body fuse and relay box is situated on the left front side of the interior of the cabin and under the instrument panel, which is mounted on the cross beam of the instrument panel. All the fuses and relays cannot be serviced it must be replaced as a unit.

Operation

When a circuit fails, the fuse will blow and remove current from the circuit.

Turn off the ignition switch, and then replace the fuse.

Downloaded from www.Manualslib.com manuals search engine

Overview

Body Fuse And Relay Box

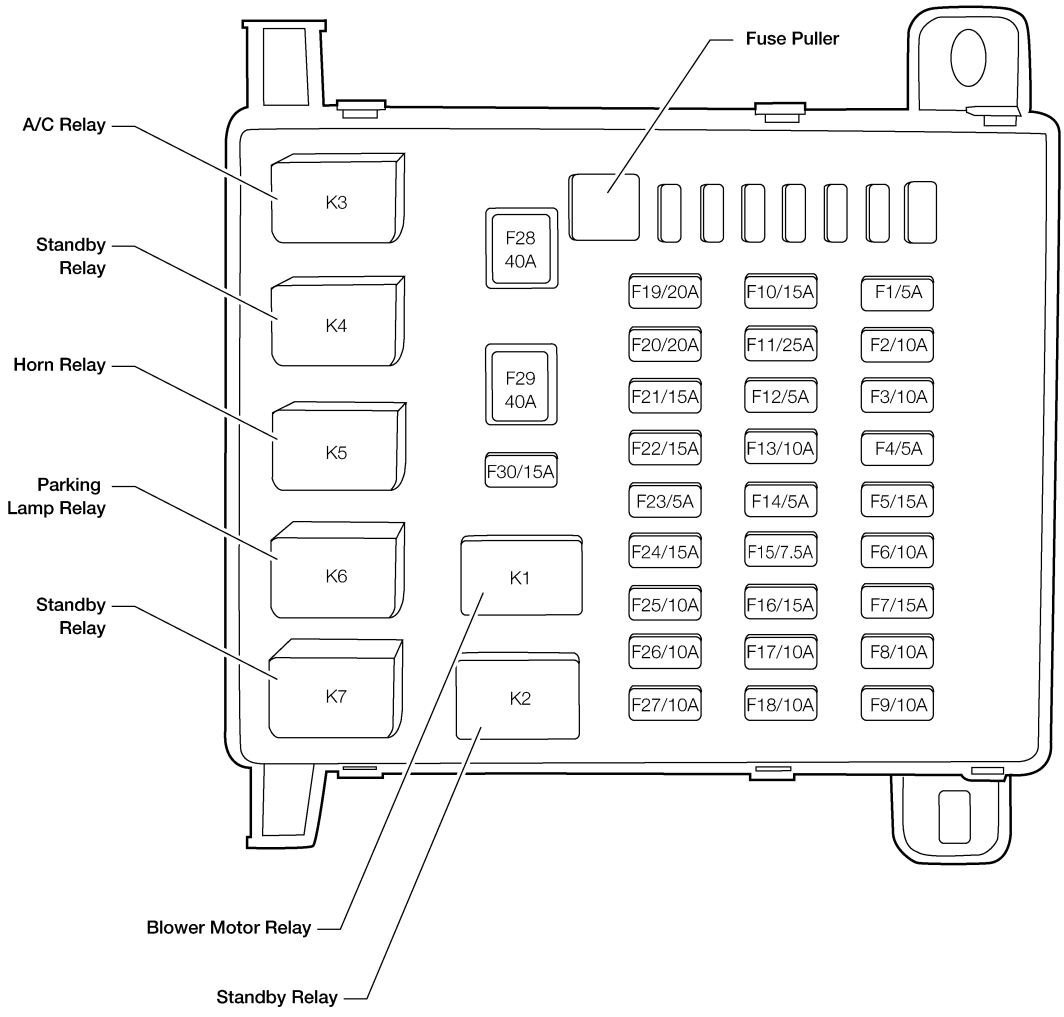

Itsmw170006t

16

Downloaded from www.Manualslib.com manuals search engine

VEHICLE WIRING HARNESS LAYOUT

GENERAL INFORMATION 16-45
- Description 16-45
- Operation 16-45
- How To Read Harness Layout Diagrams 16-45

VEHICLE HARNESS ROUTING MAPS 16-46
- Vehicle Harness Layout 16-46
- Engine Control Harness - With 1.6L & 1.8L Engine 16-48
- Engine Control Harness - With ACTECO 2.0L Engine 16-51
- Engine Control Harness - With MITSUBISHI 2.4L Engine 16-53
- Engine Room Harness - With 2.0L & 2.4L Engine 16-55
- Main Harness 16-58
- Body Harness 16-61
- Roof Harness 16-63
- Front Door LH Harness 16-64
- Front Door RH Harness 16-65
- Rear Door LH Harness 16-66
- Rear Door RH Harness 16-67
- Back Door Harness 16-68
- Restraints Harness 16-69

Downloaded from www.Manualslib.com manuals search engine

GENERAL INFORMATION

Description

This section provides illustrations identifying component, ground and splice locations in the vehicle.

To help locate all electrical components on the drawings, the following harness layouts use a map style grid:

- Engine Room Harness (1.6L & 1.8L/2.0L & 2.4L)
- Engine Control Harness (1.6L & 1.8L/2.0L & 2.4L)
- Main Harness
- Body Harness
- Front Door LH Harness
- Front Door RH Harness
- Rear Door LH Harness
- Rear Door RH Harness
- Back Door Harness
- Roof Harness
- Restraints Harness

Operation

Use the wiring harness diagrams in each harness section for component, ground and splice identification. Refer to the appropriate index for the specific vehicle harness.

How To Read Harness Layout Diagrams

1. Find the desired connector number on the connector list.
2. Find the grid reference.
3. On the drawing, find the crossing of the grid reference column letter and row number.
4. Find the connector number in the crossing zone.
5. Follow the line (if used) to the connector.

Downloaded from www.Manualslib.com manuals search engine

VEHICLE HARNESS ROUTING MAPS

Vehicle Harness Layout

Vehicle Harness Layout (Page 1 of 2)

ACTECO 2.0L ENGINE SYSTEM

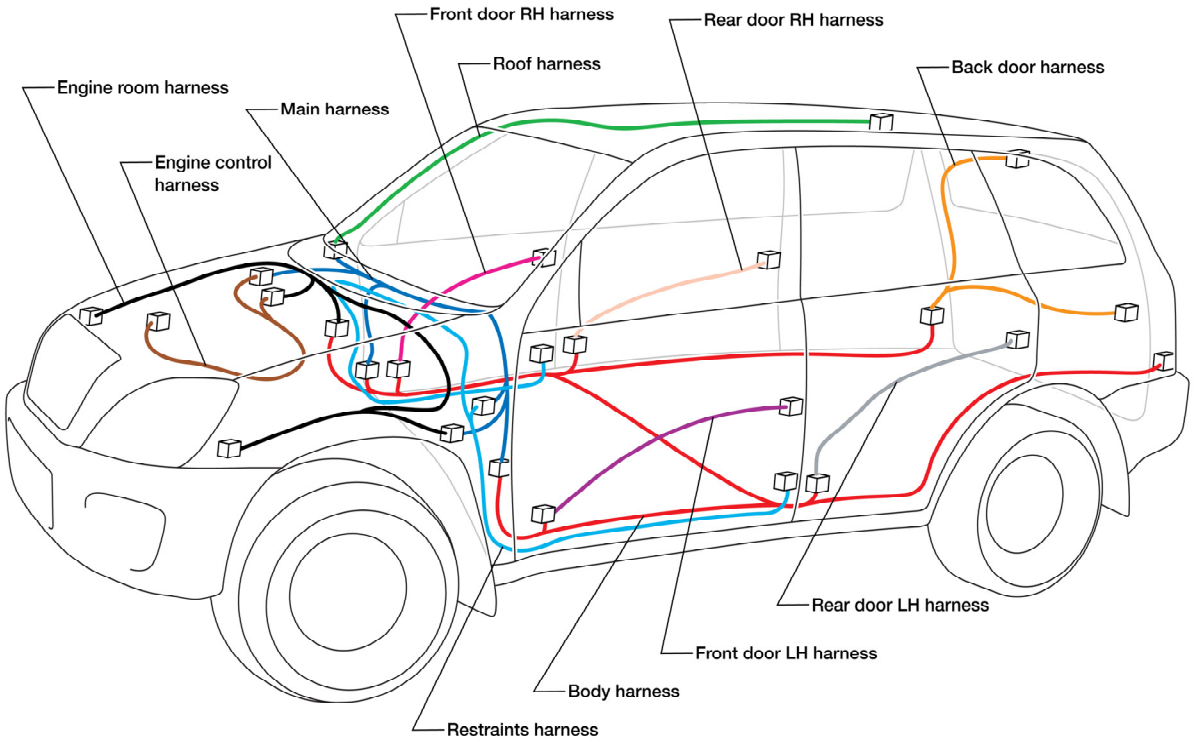

ACTECO 1.6L - 1.8L ENGINE SYSTEM

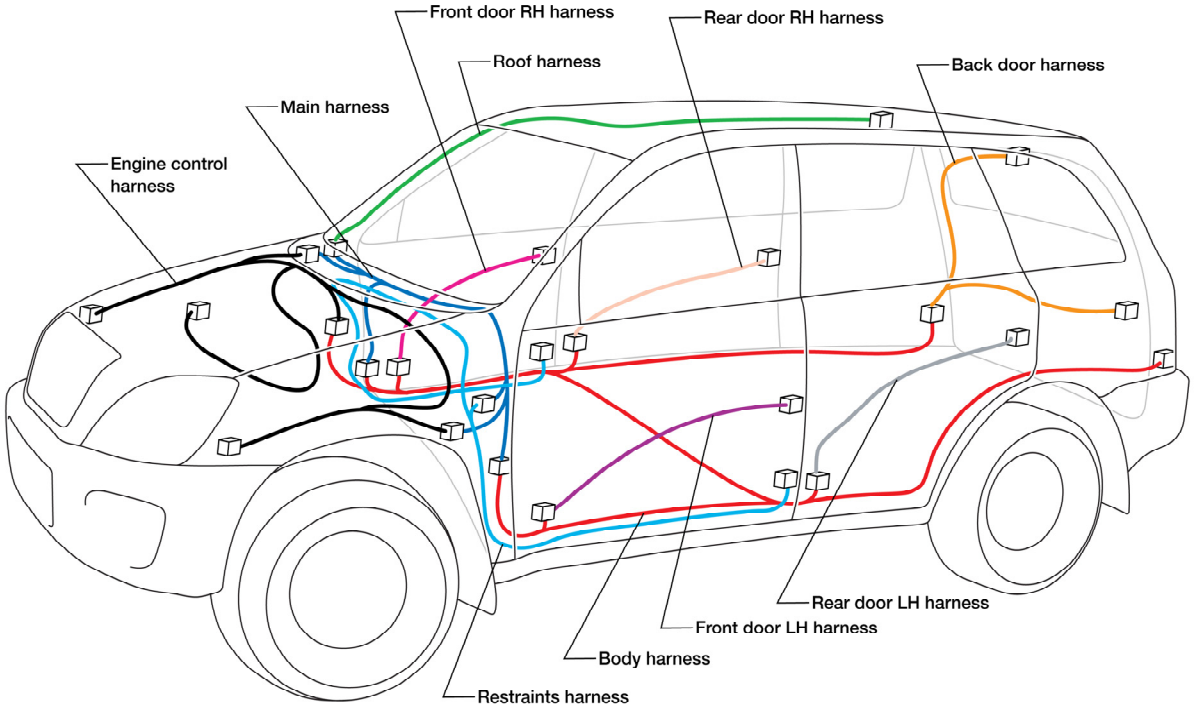

Itsmw170007t

Downloaded from www.Manualslib.com manuals search engine

Vehicle Harness Layout (Page 2 of 2)

MITSUBISHI 2.4L ENGINE SYSTEM

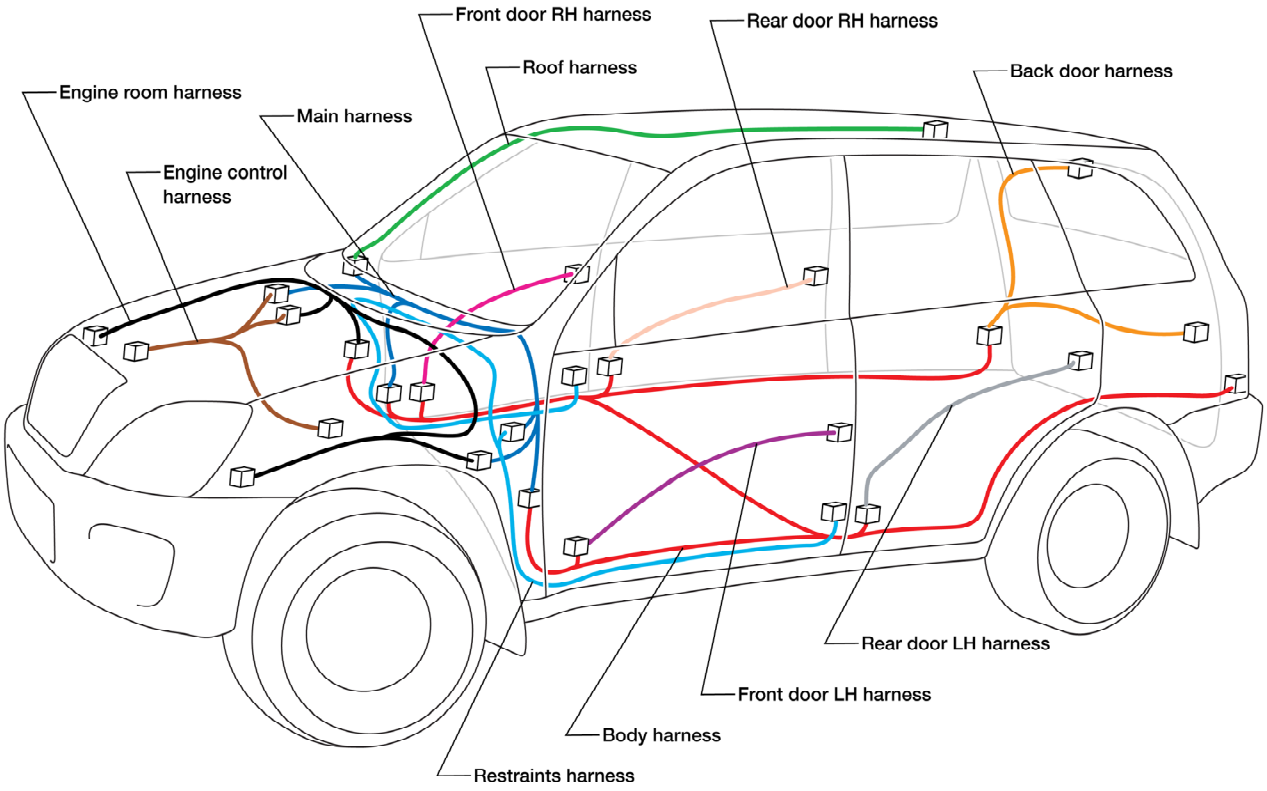

Itsmw170008t

Downloaded from www.Manualslib.com manuals search engine

Engine Control Harness - With 1.6L & 1.8L Engine

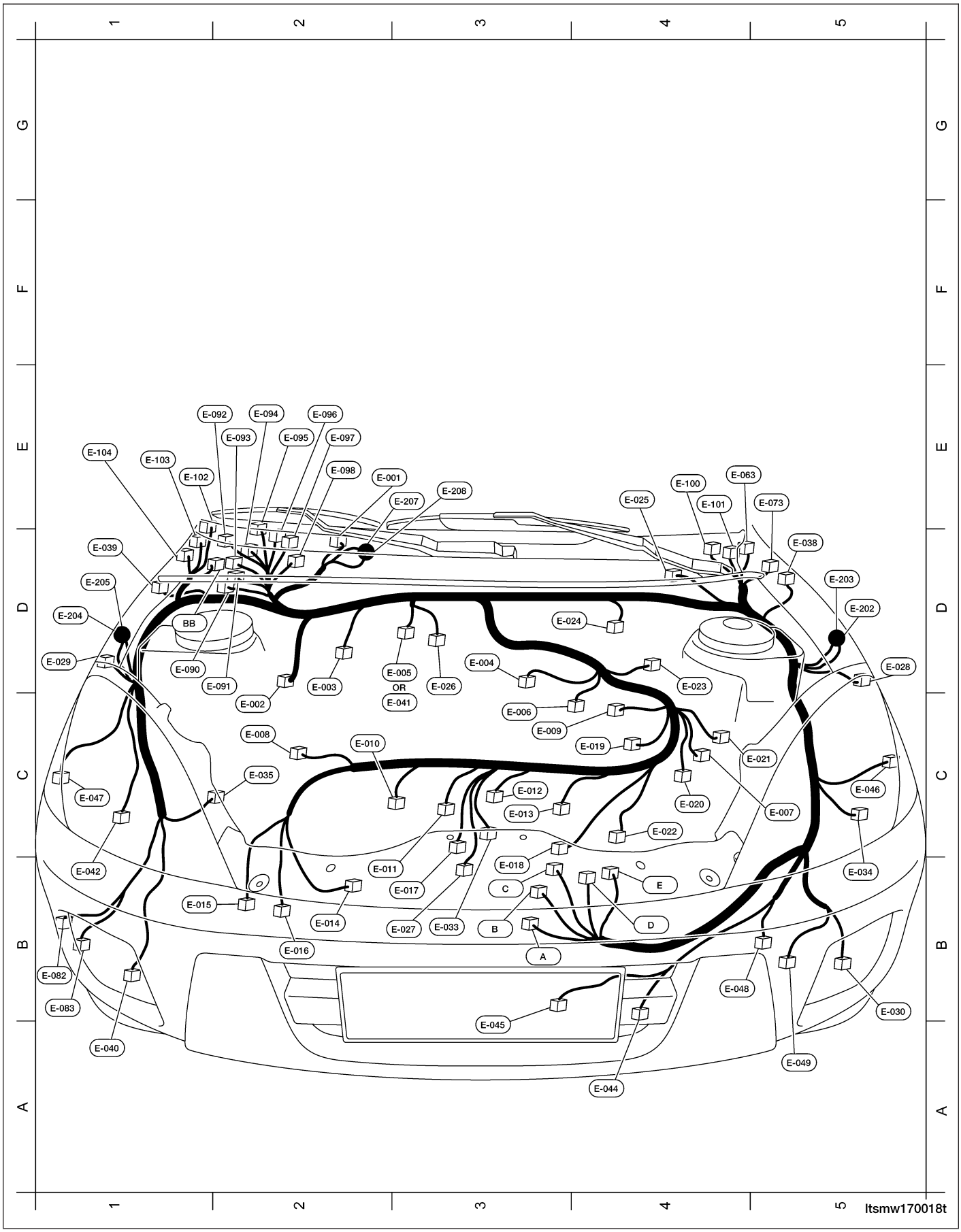

Downloaded from www.Manualslib.com manuals search engine

A	/1	Power Fuse Box	B3
B	/1	Power Fuse Box	B3
C	/1	Power Fuse Box	B3
D	/1	Power Fuse Box	B4
E	/1	Power Fuse Box	B4
E-001	B/81	ECM	D2
E-002	B/25	ABS Hydraulic Control Module	D2
E-003	B/4	A/C Pressure Switch	D2
E-004	W-O/4	Upstream Oxygen Sensor	D3
E-005	W-O/4	Downstream Oxygen Sensor (With EOBD)	D3
E-006	B/3	Crankshaft Position Sensor	C4
E-007	B/3	Camshaft Position Sensor	C4
E-008	B/3	Generator	C2
E-009	B/5	Air Flow Sensor	C4
E-010	B/2	Fuel Injector No.1	C3
E-011	B/2	Fuel Injector No.2	C3
E-012	B/2	Fuel Injector No.3	C3
E-013	B/2	Fuel Injector No.4	C4
E-014	B/1	Power Steering Switch	B2
E-015	B/2	A/C Compressor	B2
E-016	W/1	Oil Pressure Switch	B2
E-017	B/3	Knock Sensor	B3
E-018	B/1	Starter Motor	B4
E-019	B/2	Engine Coolant Temperature Sensor	C4
E-020	B/4	Ignition Coil	C4
E-021	B/2	Backup Lamp Switch	C4
E-022	B/3	Canister Control Valve	C4
E-023	B/3	Vehicle Speed Sensor	D4
E-024	GR/2	Brake Fluid Level Switch	D4
E-025	GR/5	Front Wiper Motor	D4
E-026	B/2	Siren	D3
E-027	B/6	Electronic Throttle Control Actuator	B3
E-028	B/2	Front Wheel Speed Sensor LH	D5
E-029	B/2	Front Wheel Speed Sensor RH	D1
E-030	B/2	Front Fog Lamp LH	B5
E-033	B/4	Manifold Absolute Pressure Sensor (With 1.6L Engine)	C3
E-034	B/10	Front Combination Lamp LH	C5
E-035	B/3	Accelerator Sensor	C2
E-038	B/3	Side Turn Signal Lamp LH	D5
E-039	B/2	Side Turn Signal Lamp RH	D1
E-040	B/2	Front Fog Lamp RH	B1
E-041	B/4	Downstream Oxygen Sensor (Without EOBD)	D3
E-042	B/10	Front Combination Lamp RH	C1

Downloaded from www.Manualslib.com manuals search engine

E-044	B/2	Main Fan Motor	B4
E-045	B/2	Secondary Fan Motor	B3
E-046	B/2	Turn Signal Lamp LH	C5
E-047	B/2	Turn Signal Lamp RH	C1
E-048	B/2	Horn 1	B5
E-049	B/2	Horn 2	B5
E-063	W/14	Body Fuse And Relay Box (H)	D4
E-073	B/1	Body Fuse And Relay Box (C)	D4
E-082	B/2	Front Washer Motor	B1
E-083	W/2	Rear Washer Motor	B1
E-090	W/16	Front Fuse And Relay Box (A)	D2
E-091	W/8	Front Fuse And Relay Box (B)	D2
E-092	W/14	Front Fuse And Relay Box (C)	D2
E-093	B/1	Front Fuse And Relay Box (D)	D2
E-094	B/1	Front Fuse And Relay Box (E)	D2
E-095	W/4	Front Fuse And Relay Box (F)	D2
E-096	W/20	Front Fuse And Relay Box (G)	D2
E-097	B/10	Front Fuse And Relay Box (H)	D2
E-098	B/2	Front Fuse And Relay Box (I)	D2
E-100	W/16	To C-107	E4
E-101	W/18	To C-109	E4
E-102	W/14	To C-102	E2
E-103	W/14	To C-103	D2
E-104	W/18	To B-111	D2
E-202	-	Ground	D5
E-203	-	Ground	D5
E-204	-	Ground	D1
E-205	-	Ground	D1
E-207	-	Ground	D2
E-208	-	Ground	D2

Downloaded from www.Manualslib.com manuals search engine

Engine Control Harness - With ACTECO 2.0L Engine

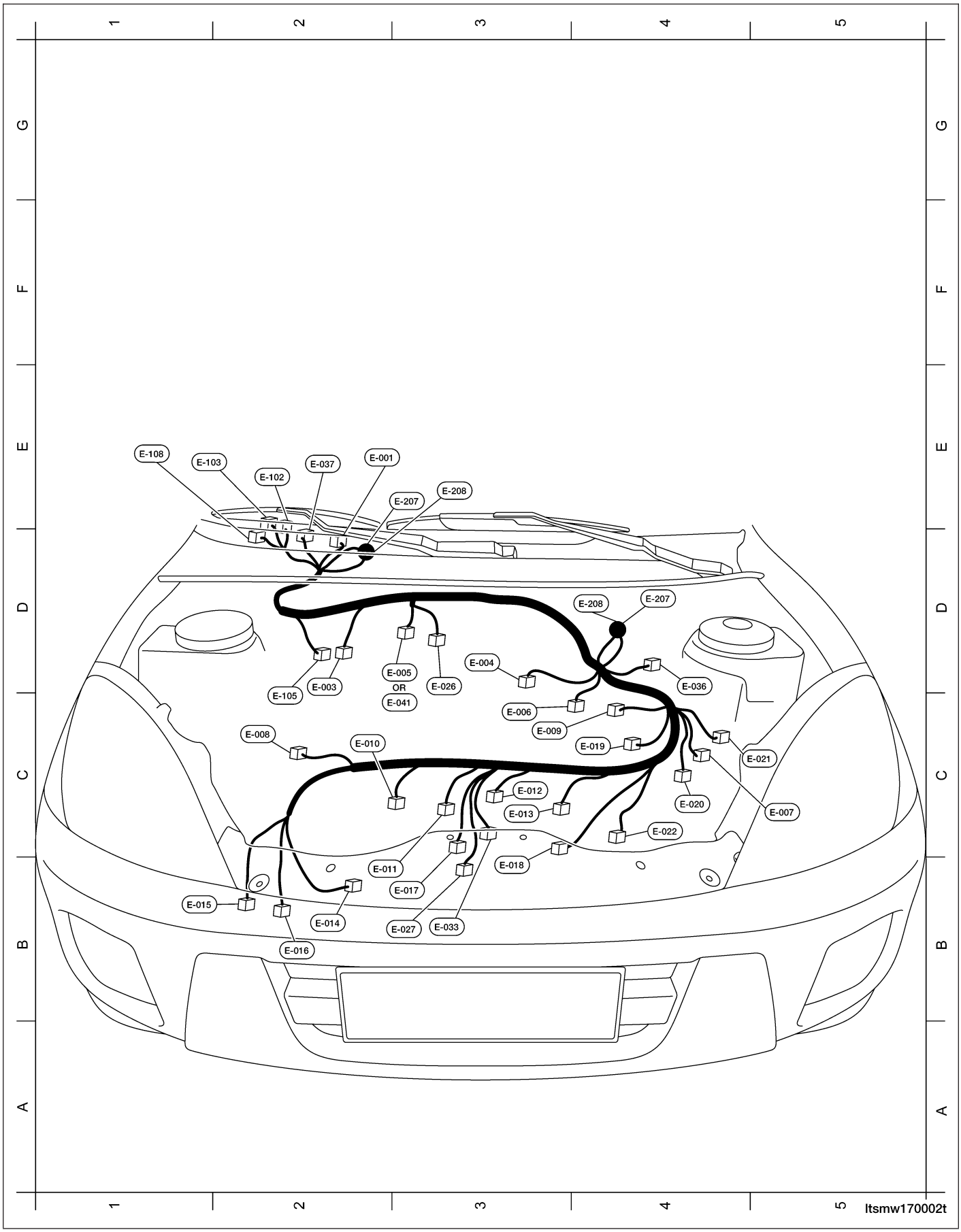

Downloaded from www.Manualslib.com manuals search engine

E-001	B/81	ECM	D2
E-003	B/4	A/C Pressure Switch	D2
E-004	W-O/4	Upstream Oxygen Sensor	D3
E-005	W-O/4	Downstream Oxygen Sensor (With EOBD)	D3
E-006	B/3	Crankshaft Position Sensor	D4
E-007	B/3	Camshaft Position Sensor	C4
E-008	B/3	Generator	C2
E-009	B/5	Air Flow Sensor	C4
E-010	B/2	Fuel Injector No.1	C2
E-011	B/2	Fuel Injector No.2	C3
E-012	B/2	Fuel Injector No.3	C3
E-013	B/2	Fuel Injector No.4	C3
E-014	B/1	Power Steering Switch	B2
E-015	B/2	A/C Compressor	B2
E-016	B/1	Oil Pressure Switch	B2
E-017	B/3	Knock Sensor	C3
E-018	B/1	Starter Motor	C3
E-019	B/2	Engine Coolant Temperature Sensor	C4
E-020	B/4	Ignition Coil	C4
E-022	B/2	Canister Control Valve	C4
E-026	B/2	Siren	D3
E-027	B/6	Electronic Throttle Control Actuator	B3
E-033	B/4	Manifold Absolute Pressure Sensor	C3
E-036	GR/56	TCM (Transmission Control Module)	D2
E-037	GR/33	A/T Assembly	D4
E-041	B/4	Downstream Oxygen Sensor (Without EOBD)	D3
E-043	B/2	Fluid Cooler Flow Control Solenoid Valve	D4
E-102	W/14	To C-102	E2
E-103	B/14	To C-103	E2
E-105	B/16	To A-102	D3
E-108	B/2	To C-108	D2
E-207	-	Ground	D2
E-208	-	Ground	D2

Downloaded from www.Manualslib.com manuals search engine

Engine Control Harness - With MITSUBISHI 2.4L Engine

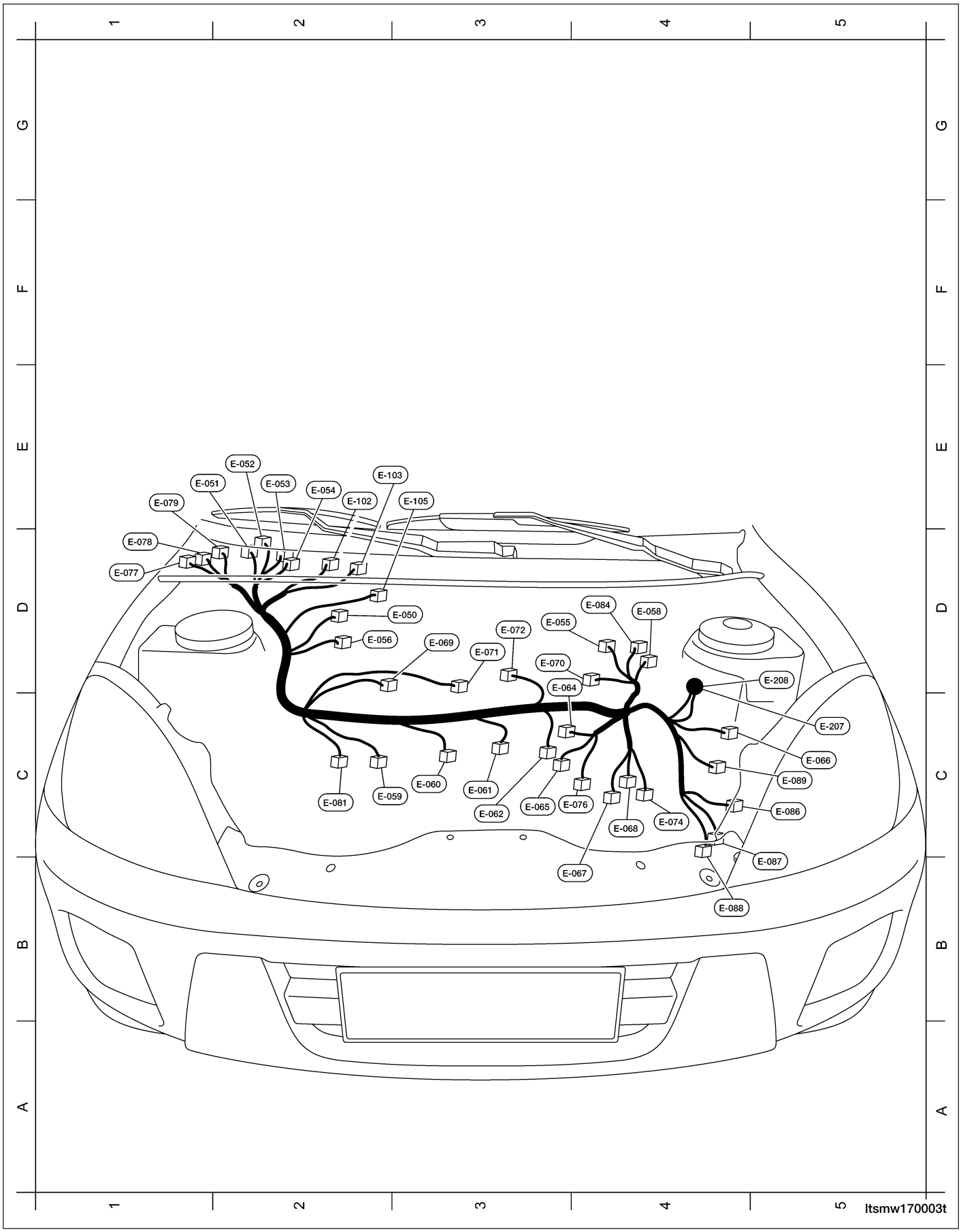

Downloaded from www.Manualslib.com manuals search engine

E-050	B/4	A/C Pressure Switch	D2
E-051	W/26	ECM	D2
E-052	W/16	ECM	D2
E-053	W/12	ECM	D2
E-054	W/22	ECM	D2
E-055	GR/3	Camshaft Position Sensor	D4
E-056	GR/3	Crankshaft Position Sensor	D2
E-058	B/7	Air Flow Sensor	D4
E-059	GR/2	Fuel Injector No.1	C2
E-060	GR/2	Fuel Injector No.2	C3
E-061	GR/2	Fuel Injector No.3	C3
E-062	GR/2	Fuel Injector No.4	C3
E-064	B/6	Idle Air Control Motor	C3
E-065	B/1	Oil Pressure Switch	C3
E-066	BR/2	Knock Sensor	C4
E-067	B/1	Starter Motor	C4
E-068	B/2	Engine Coolant Temperature Sensor	C4
E-069	GR/3	Ignition Coil 1	D2
E-070	GR/3	Ignition Coil 2	D4
E-071	GR/2	Canister Control Valve	D3
E-072	BR/2	EGR Control Solenoid Valve	D3
E-074	B/4	Upstream Oxygen Sensor	C4
E-076	B/4	Throttle Position Sensor	C4
E-077	W/26	TCM (Transmission Control Module)	D1
E-078	W/16	TCM (Transmission Control Module)	D1
E-079	W/22	TCM (Transmission Control Module)	D1
E-081	GR/4	Generator	C2
E-084	B/1	Coolant Temperature Sensor (For Instrument Cluster)	D4
E-086	GR/10	A/T Assembly	C4
E-087	GR/10	Gearshift Switch	C4
E-088	B/3	Input Shaft Sensor	C4
E-089	GR/3	Output Shaft Sensor	C4
E-102	W/14	To C-102	D2
E-103	B/14	To C-103	D2
E-105	B/16	To A-105	D2
E-207	-	Ground	C4
E-208	-	Ground	C4

Downloaded from www.Manualslib.com manuals search engine

Engine Room Harness - With 2.0L & 2.4L Engine

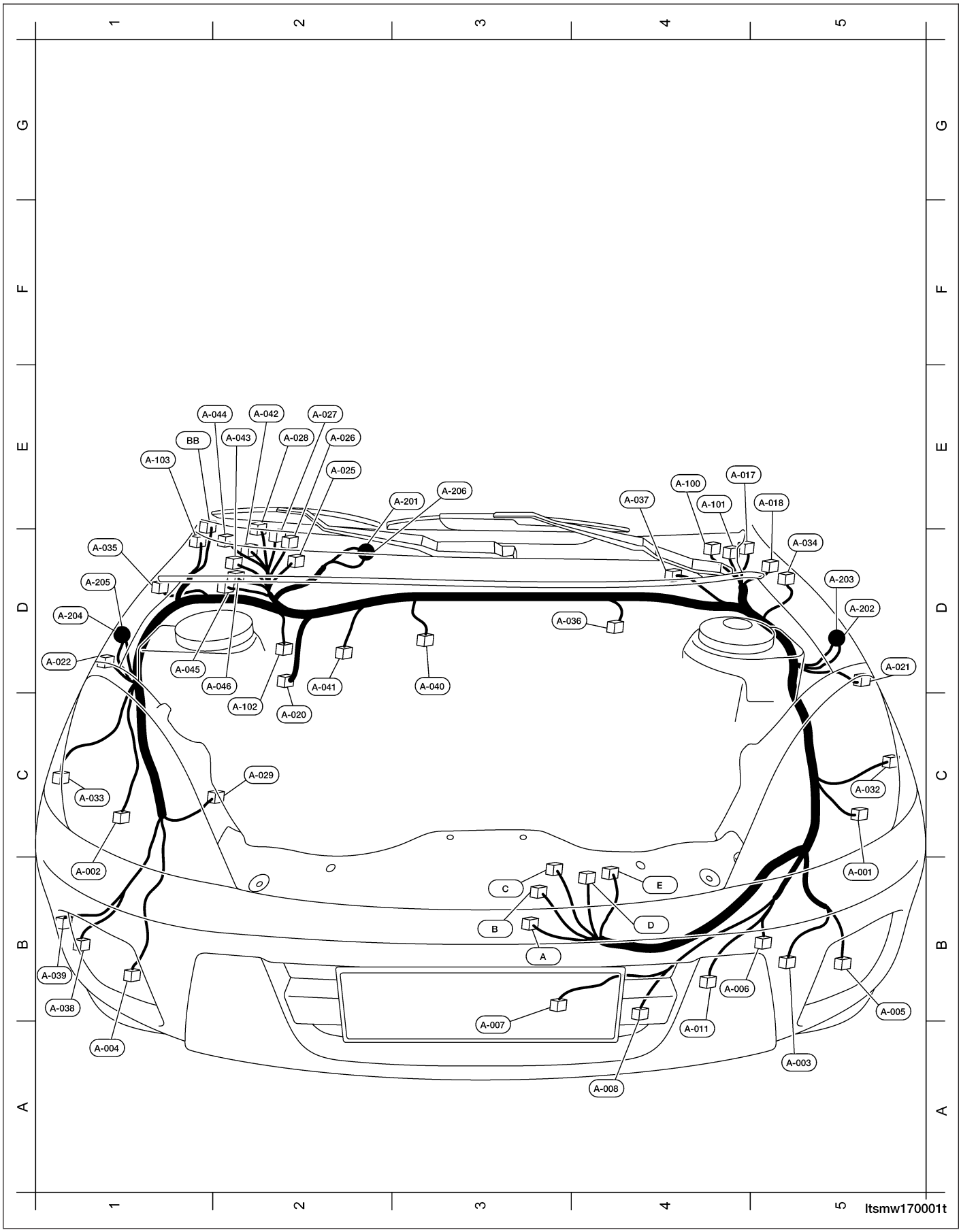

Downloaded from www.Manualslib.com manuals search engine

A	/1	Power Fuse Box	B3
B	/1	Power Fuse Box	B3
C	/1	Power Fuse Box	B3
D	/1	Power Fuse Box	B4
E	/1	Power Fuse Box	B4
A-001	B/10	Front Combination Lamp LH	B5
A-002	B/10	Front Combination Lamp RH	B1
A-003	B/2	Front Fog Lamp LH	A5
A-004	B/2	Front Fog Lamp RH	A1
A-005	GR/1	Horn 1	B5
A-006	GR/2	Horn 2	B5
A-007	B/2	Main Fan Motor	B3
A-008	B/2	Secondary Fan Motor	B4
A-011	GR/3	Cooling Fan Control Module	B4
A-017	W/14	Body Fuse And Relay Box (H)	D5
A-018	B/1	Body Fuse And Relay Box (C)	D5
A-020	B/25	ABS Hydraulic Control Module	C2
A-021	B/2	Front Wheel Speed Sensor LH	D5
A-022	B/2	Front Wheel Speed Sensor RH	D1
A-023	B/2	A/C Compressor	B2
A-024	B/1	Power Steering Switch	C2
A-025	W/16	Front Fuse And Relay Box (A)	D2
A-026	W/8	Front Fuse And Relay Box (B)	D2
A-027	W/14	Front Fuse And Relay Box (C)	D2
A-028	B/1	Front Fuse And Relay Box (D)	D2
A-029	B/3	Accelerator Sensor	C2
A-032	B/2	Turn Signal Lamp LH	C5
A-033	B/2	Turn Signal Lamp RH	C1
A-034	B/2	Side Turn Signal Lamp LH	D5
A-035	B/2	Side Turn Signal Lamp RH	D1
A-036	GR/2	Brake Fluid Level Switch	D4
A-037	GR/5	Front Wiper Motor	D4
A-038	W/2	Front Washer Motor	B1
A-039	B/2	Rear Washer Motor	B1
A-040	B/2	Siren	D3
A-041	B/1	A/C Pressure Switch	D2
A-042	B/1	Front Fuse And Relay Box (E)	D2
A-043	W/4	Front Fuse And Relay Box (F)	D2
A-044	W/20	Front Fuse And Relay Box (G)	D2
A-045	B/10	Front Fuse And Relay Box (H)	D2
A-046	B/2	Front Fuse And Relay Box (I)	D2
BB	B/1	BCM (Body Control Module) (Battery)	D2
A-100	W/18	To C-100	D4
A-101	W/18	To C-101	D4

Downloaded from www.Manualslib.com manuals search engine

A-102	B/16	To E-105	D3
A-103	W/18	To B-106	D1
A-201	-	Ground	D2
A-202	-	Ground	D5
A-203	-	Ground	D5
A-204	-	Ground	D1
A-205	-	Ground	D1
A-206	-	Ground	D2

Downloaded from www.Manualslib.com manuals search engine

Main Harness

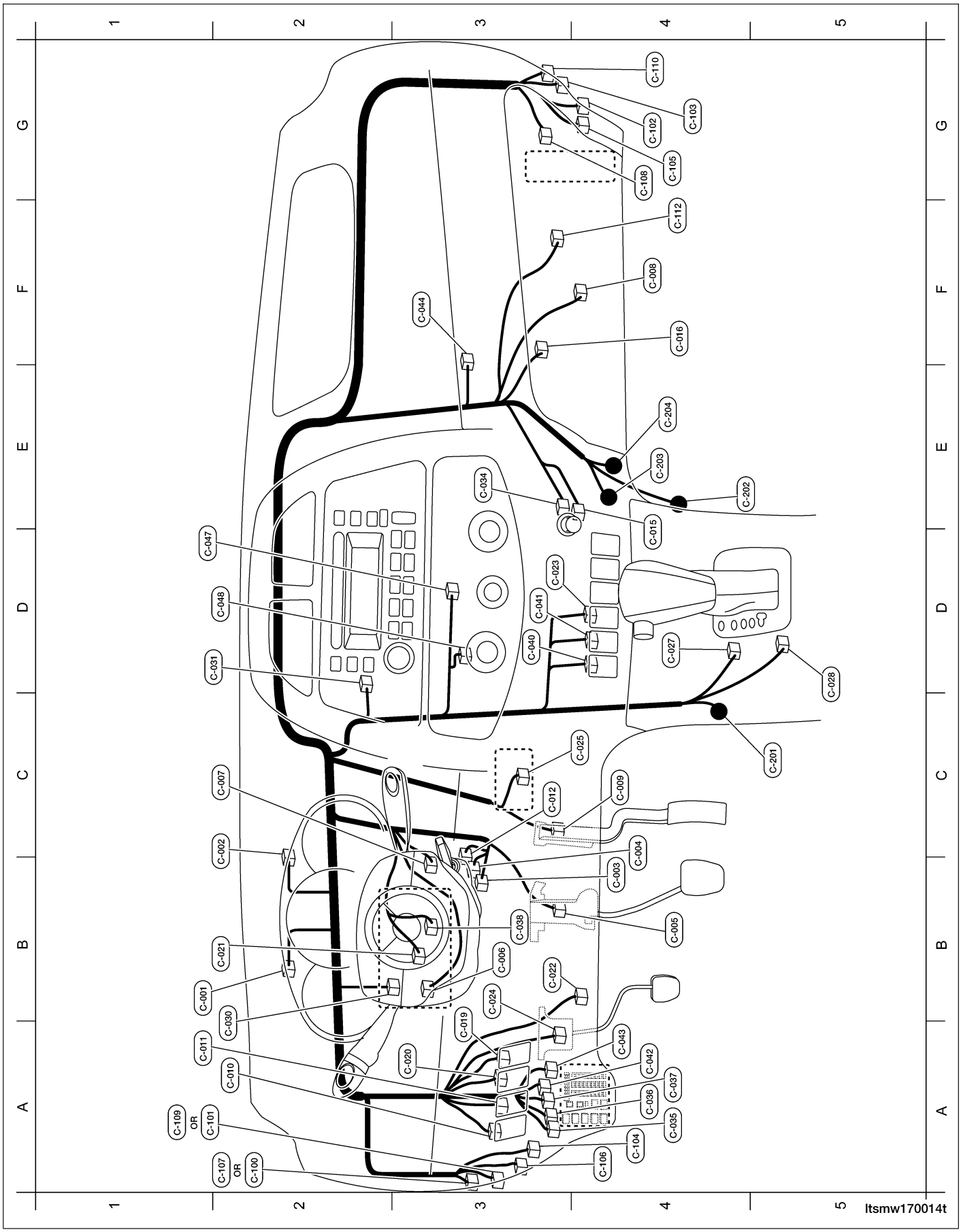

Downloaded from www.Manualslib.com manuals search engine

C-001	L/32	Instrument Cluster	B1
C-002	G/32	Instrument Cluster	C1
C-003	W/4	Key Switch	B3
C-004	W/2	Key Hole Lamp	B3
C-005	Y/4	Brake Switch	B3
C-006	W/13	Multi-Function Switch	B3
C-007	B/10	Wiper And Washer Switch	B3
C-008	W/2	Blower Motor	F4
C-009	B/6	Accelerator Pedal Position Sensor	C3
C-010	W/6	Front Fog Lamp Switch	A3
C-011	Y/6	Rear Fog Lamp Switch	A3
C-012	W/6	Ignition Switch	B3
C-015	W/3	Console Power Outlet (For Cigarette Lighter)	E4
C-016	W/4	Speed Resistor	F3
C-019	B/6	Dimmer Control Switch	A3
C-020	GR/6	Headlamp Aiming Switch	A3
C-021	W/4	Cruise/Audio Combination Switch	B3
C-022	G/16	Data Link Connector	B4
C-023	GR/2	Security Lamp	D3
C-024	B/2	Clutch Pedal Switch	A3
C-025	B/8	Immobilizer Control Module	C3
C-027	BR/6	Shifter Selector	D3
C-028	L/10	Winter Mode/Shifter Selector Register	D5
C-030	L/32	CAN Converter	B3
C-031	B/16	Audio	C2
C-034	W/2	Console Power Outlet (Illumination)	E4
C-035	W/8	Body Fuse And Relay Box (A)	A3
C-036	W/20	Body Fuse And Relay Box (B)	A3
C-037	B/2	Body Fuse And Relay Box (D)	A3
C-038	W/1	Horn Switch	B3
C-040	L/6	Heated Seat Switch LH	D3
C-041	G/6	Heated Seat Switch RH	D3
C-042	W/4	Body Fuse And Relay Box (E)	A3
C-043	W/16	Body Fuse And Relay Box (F)	A3
C-044	B/5	Recirculation Door Actuator	E3
C-047	B/16	HVAC Control Panel	D3
C-048	W/8	Blower Switch	D3
C-100	W/16	To A-100	A3
C-101	W/18	To A-101	A3
C-102	W/14	To E-102	G4
C-103	W/14	To E-103	G3
C-104	W/22	To B-104	A3
C-105	W/22	To B-105	G4
C-106	W/6	To J-100	A3

Downloaded from www.Manualslib.com manuals search engine

C-107	W/16	To E-100	A3
C-108	W/14	To E-108	G3
C-109	W/18	To E-101	A3
C-110	W/10	To F-100	G3
C-112	B/22	To B-112	F3
C-201	B/20	Ground	C4
C-202	-	Ground	E4
C-203	-	Ground	E4
C-204	-	Ground	E4

Downloaded from www.Manualslib.com manuals search engine

Body Harness

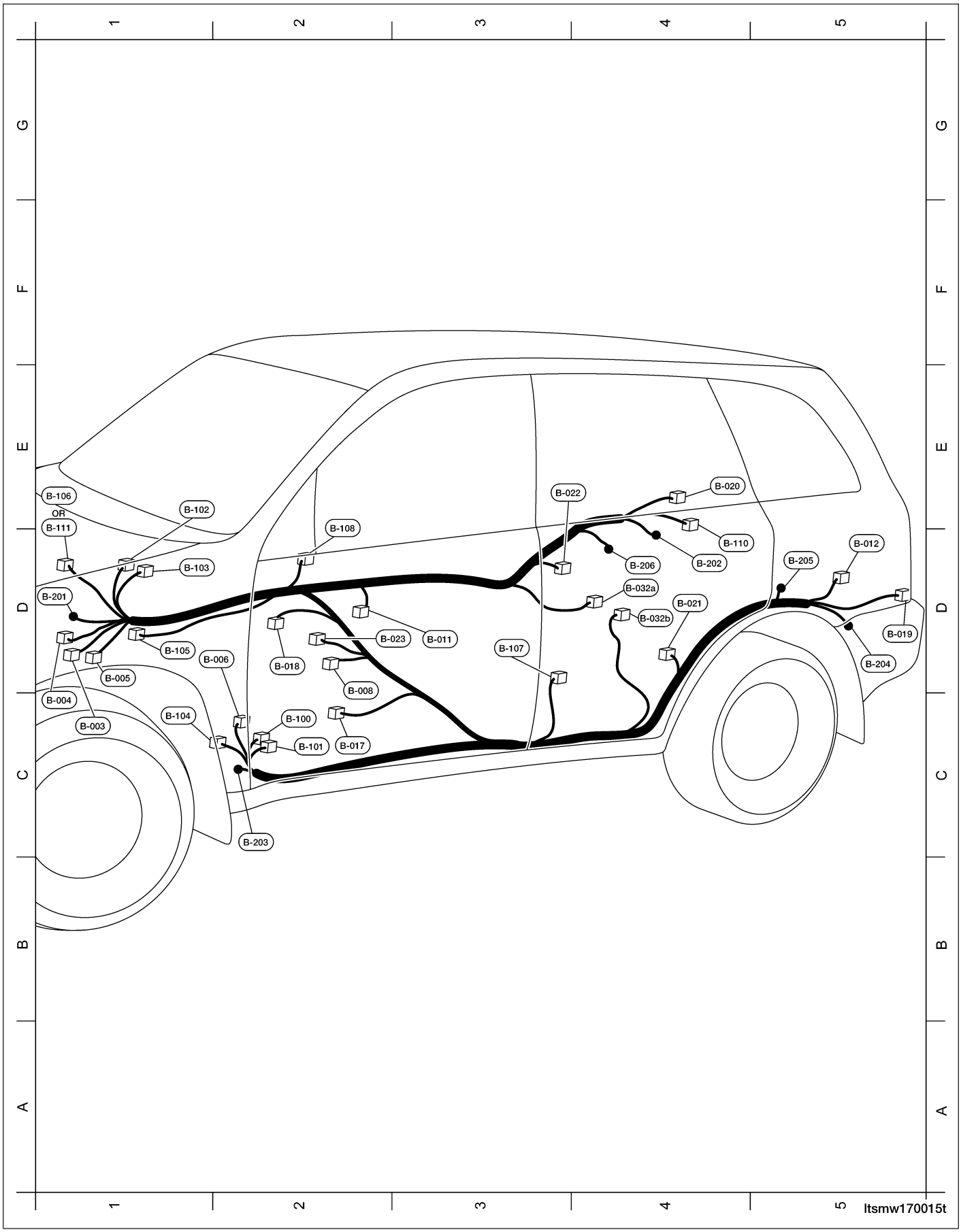

Downloaded from www.Manualslib.com manuals search engine

B-003	GR/15	BCM (Body Control Module)	D1
B-004	B/12	BCM (Body Control Module)	D1
B-005	B/8	BCM (Body Control Module)	D1
B-006	B/10	Body Fuse And Relay Box (G)	C2
B-008	W/1	Parking Brake Switch	D2
B-011	B/4	Downstream Oxygen Sensor (With MITSUBISHI 2.4L Engine System)	D2
B-012	W/2	Rear Power Outlet LH	D5
B-017	L/6	Driver Seat Assembly	C2
B-018	L/6	Heated Seat RH	D2
B-019	W/6	Rear Combination Lamp LH	D5
B-020	W/6	Rear Combination Lamp RH	D4
B-021	W/2	Rear Wheel Speed Sensor LH	D4
B-022	W/2	Rear Wheel Speed Sensor RH	D3
B-023	B/3	Decelerator Sensor	D2
B-032a	B/4	Fuel Level Sensor And Fuel Pump (With ACTECO Engine System)	D3
B-032b	B/4	Fuel Level Sensor And Fuel Pump (With MITSUBISHI 2.4L Engine System)	D3
B-100	W/18	To D-100	C2
B-101	W/14	To D-101	C2
B-102	W/14	To G-100	D1
B-103	W/10	To G-101	D1
B-104	W/22	To C-104	C2
B-105	W/22	To C-105	D1
B-106	W/18	To A-103	E1
B-107	W/14	To I-100	C4
B-108	W/14	To H-100	D2
B-110	W/14	To L-100	D4
B-111	W/18	To E-104	E1
B-201	-	Ground	D1
B-202	-	Ground	D4
B-203	-	Ground	D2
B-204	-	Ground	D5
B-205	-	Ground (With MITSUBISHI 2.4L Engine System)	D5
B-206	-	Ground (With ACTECO Engine System)	D4

Downloaded from www.Manualslib.com manuals search engine

Roof Harness

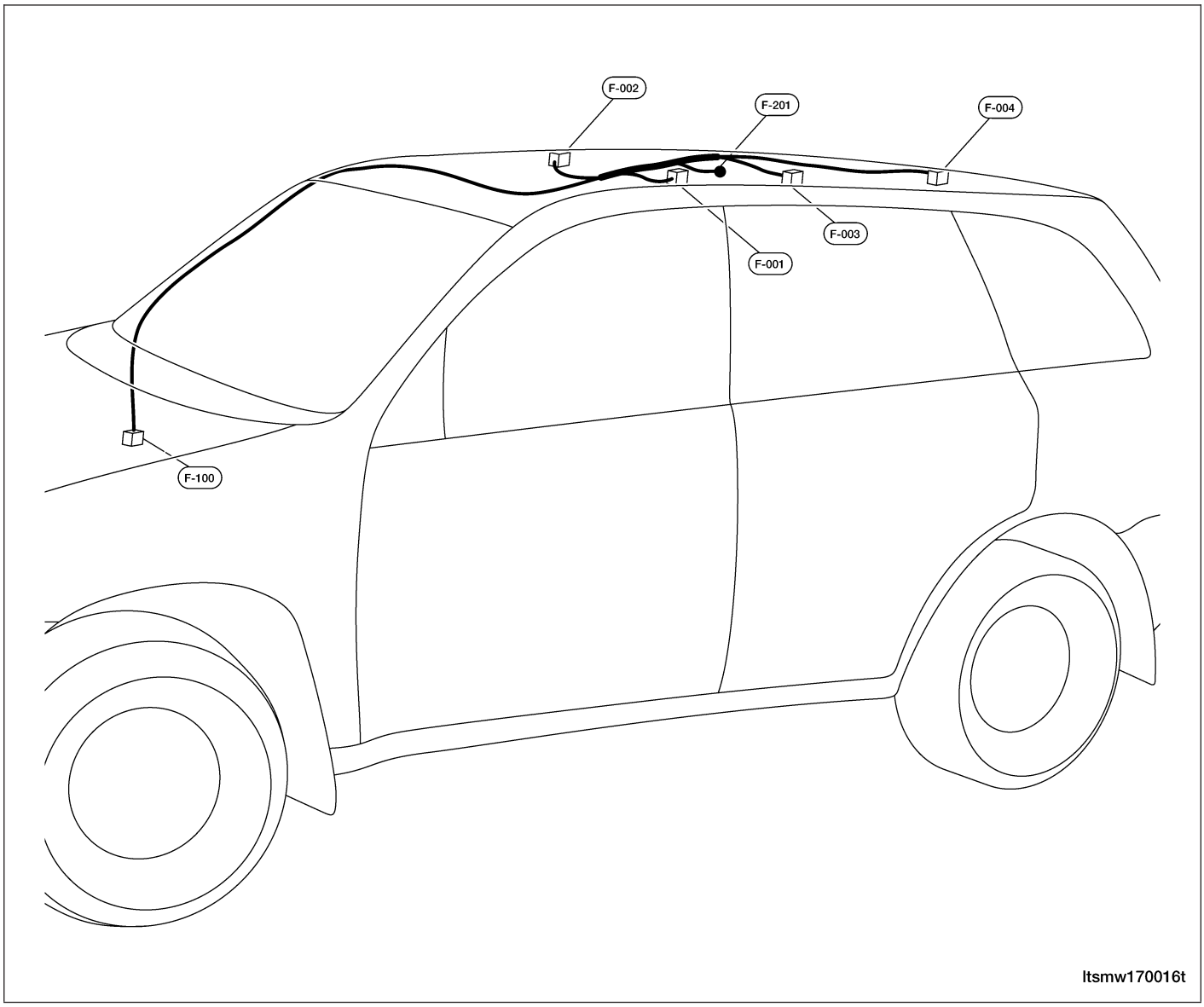

F-001	W/6	Sunroof Control Unit
F-002	W/6	Front Courtesy/Dome Lamp Assembly
F-003	W/2	Mid Courtesy/Dome Lamp Assembly
F-004	W/2	Rear Room Assembly
F-100	W/10	To C-110
F-201	-	Ground

Downloaded from www.Manualslib.com manuals search engine

Front Door LH Harness

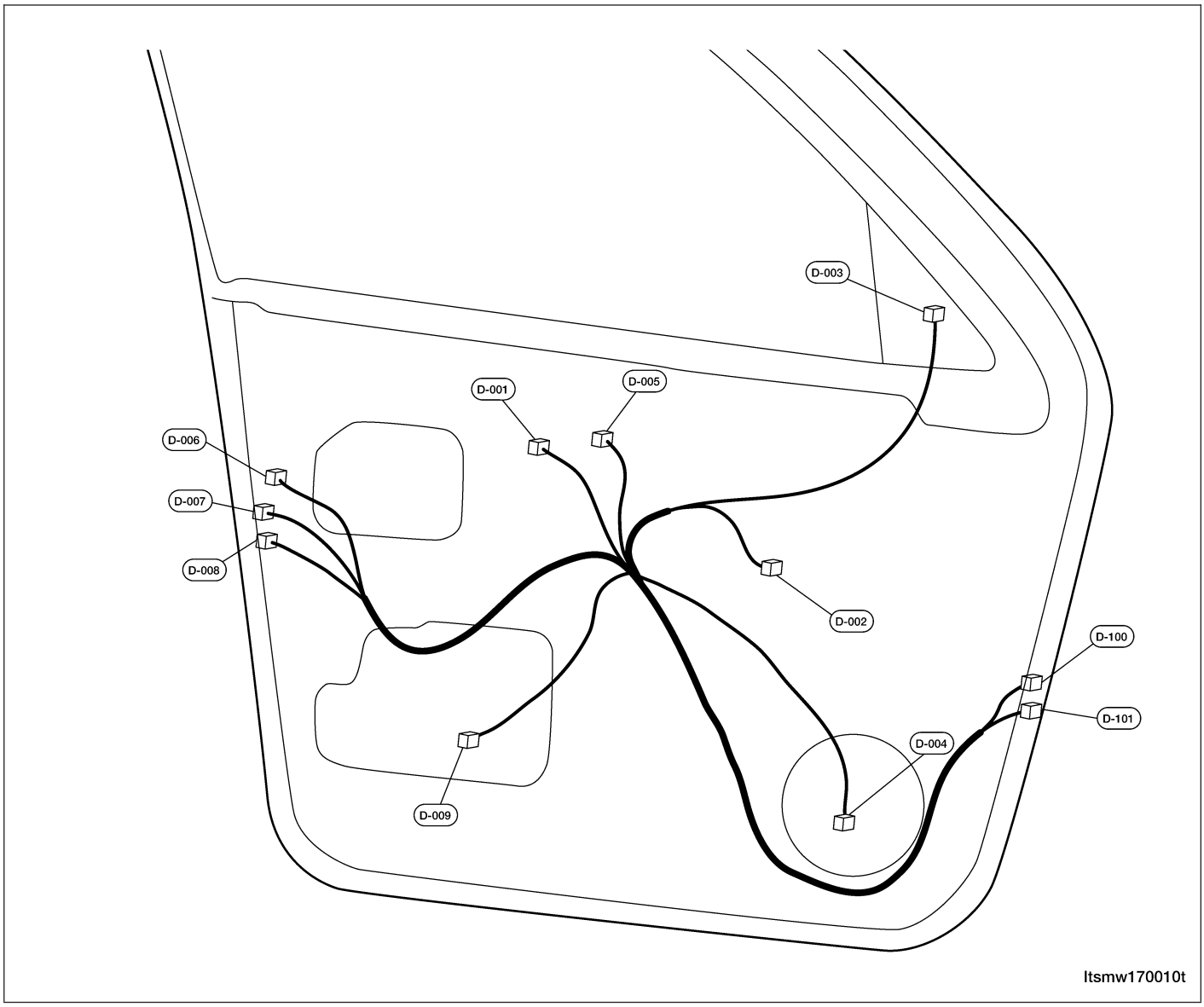

D-001	Y/16	Main Power Window And Door Lock/Unlock Switch
D-002	W/2	Front Power Window Motor LH
D-003	L/6	Outside Mirror LH
D-004	B/2	Front Speaker LH
D-005	B/1-	Outside Mirror Remote Control Switch
D-006	B/2	Front Door Lock Assembly LH
D-007	GR/4	Front Door Lock Assembly LH
D-008	B/4	Front Door Lock Assembly LH
D-009	W/2	Step Lamp LH
D-100	W/18	To B-100
D-101	W/14	To B-101

Downloaded from www.Manualslib.com manuals search engine

Front Door RH Harness

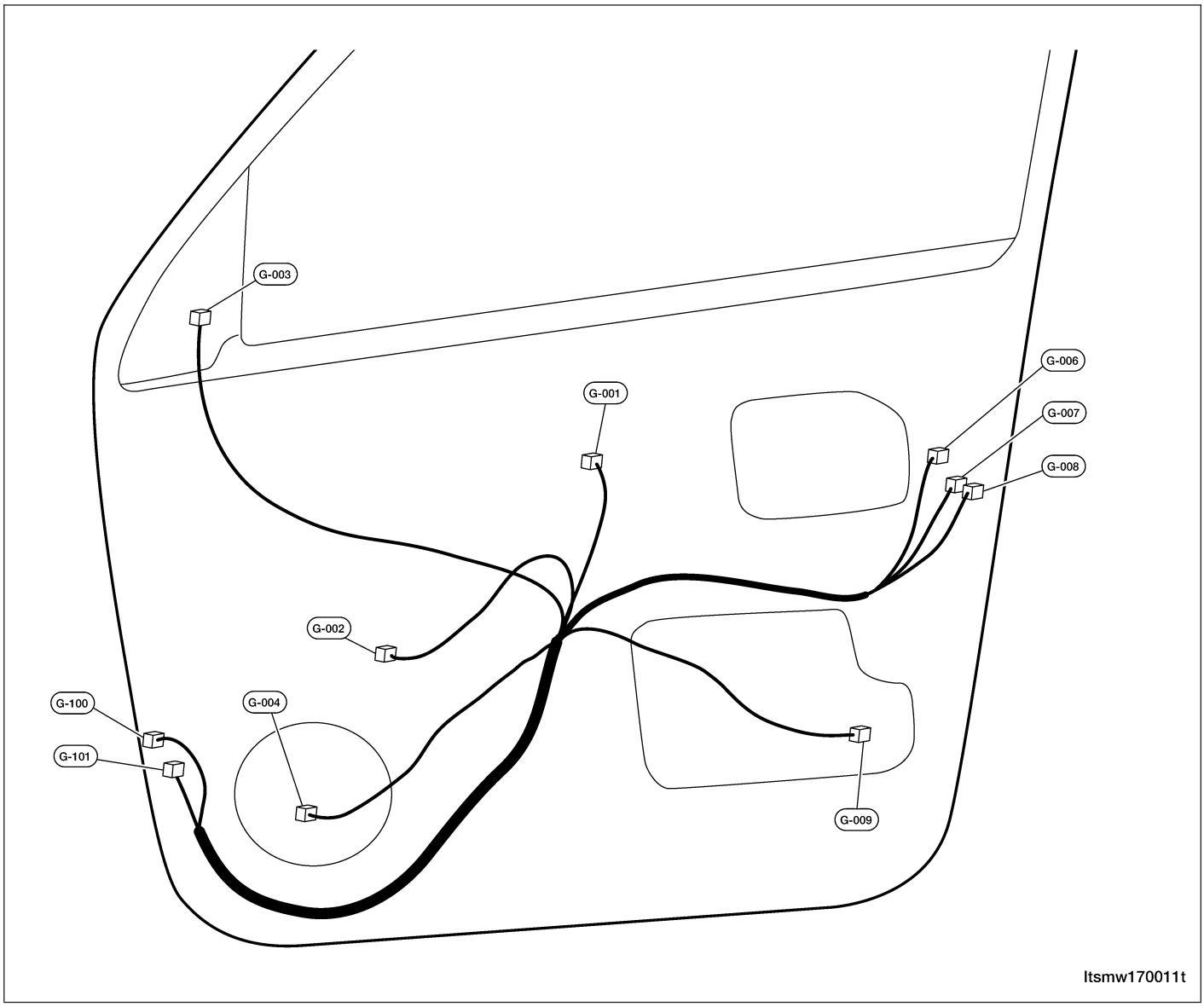

G-001	B/10	Front Power Window Switch RH
G-002	W/2	Front Power Window Motor RH
G-003	L/6	Outside Mirror RH
G-004	B/2	Front Speaker RH
G-006	B/2	Front Door Lock Assembly RH
G-007	GR/4	Front Door Lock Assembly RH
G-008	GR/4	Front Door Lock Assembly RH
G-009	W/2	Step Lamp RH
G-100	W/14	To B-102
G-101	W/10	To B-103

Downloaded from www.Manualslib.com manuals search engine

Rear Door LH Harness

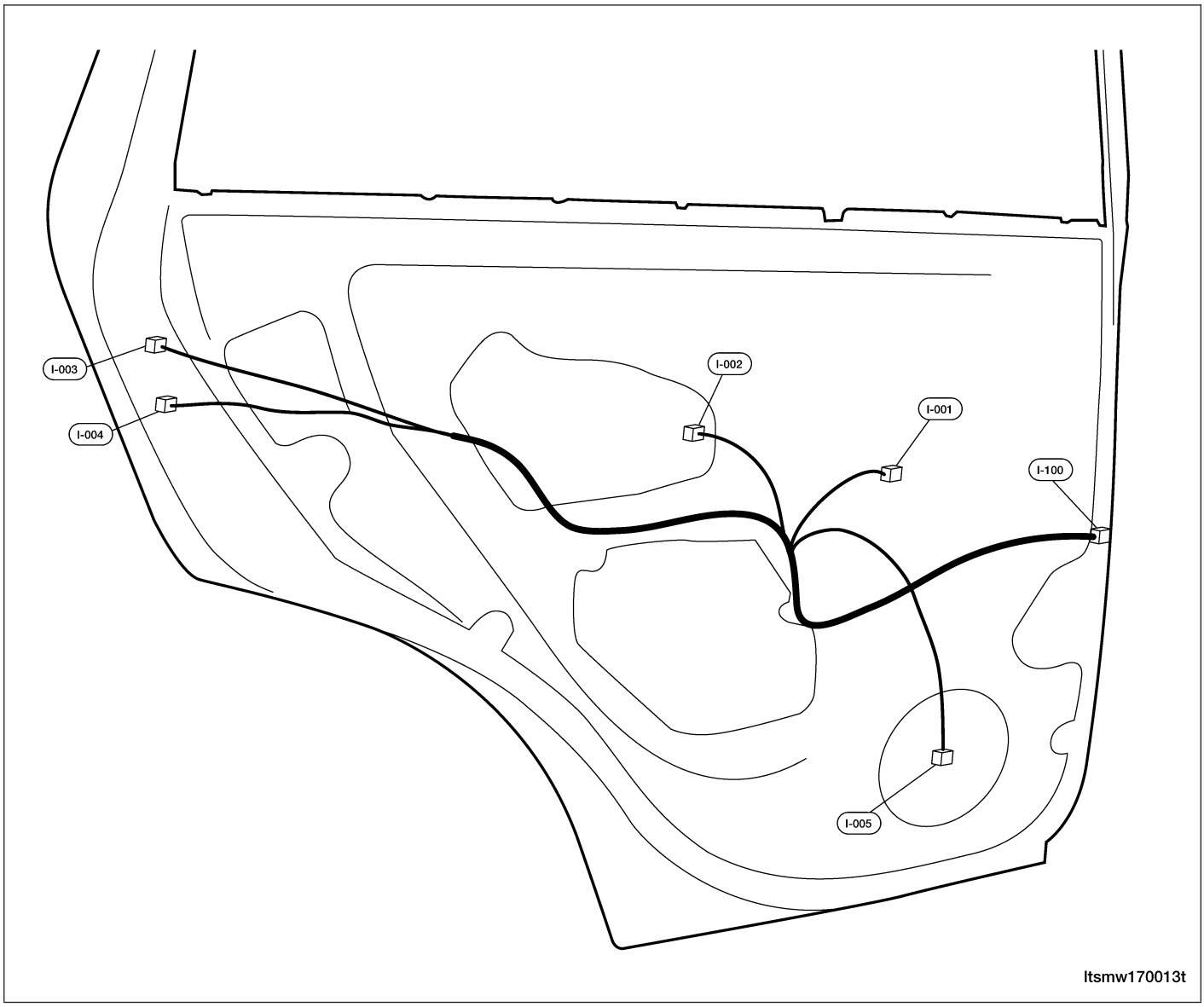

I-001	W/2	Rear Power Window Motor LH
I-002	B/10	Rear Power Window Switch LH
I-003	B/2	Rear Door Lock Assembly LH
I-004	GR/4	Rear Door Lock Assembly LH
I-005	B/2	Rear Speaker LH
I-100	W/14	To B-107

Downloaded from www.Manualslib.com manuals search engine

Rear Door RH Harness

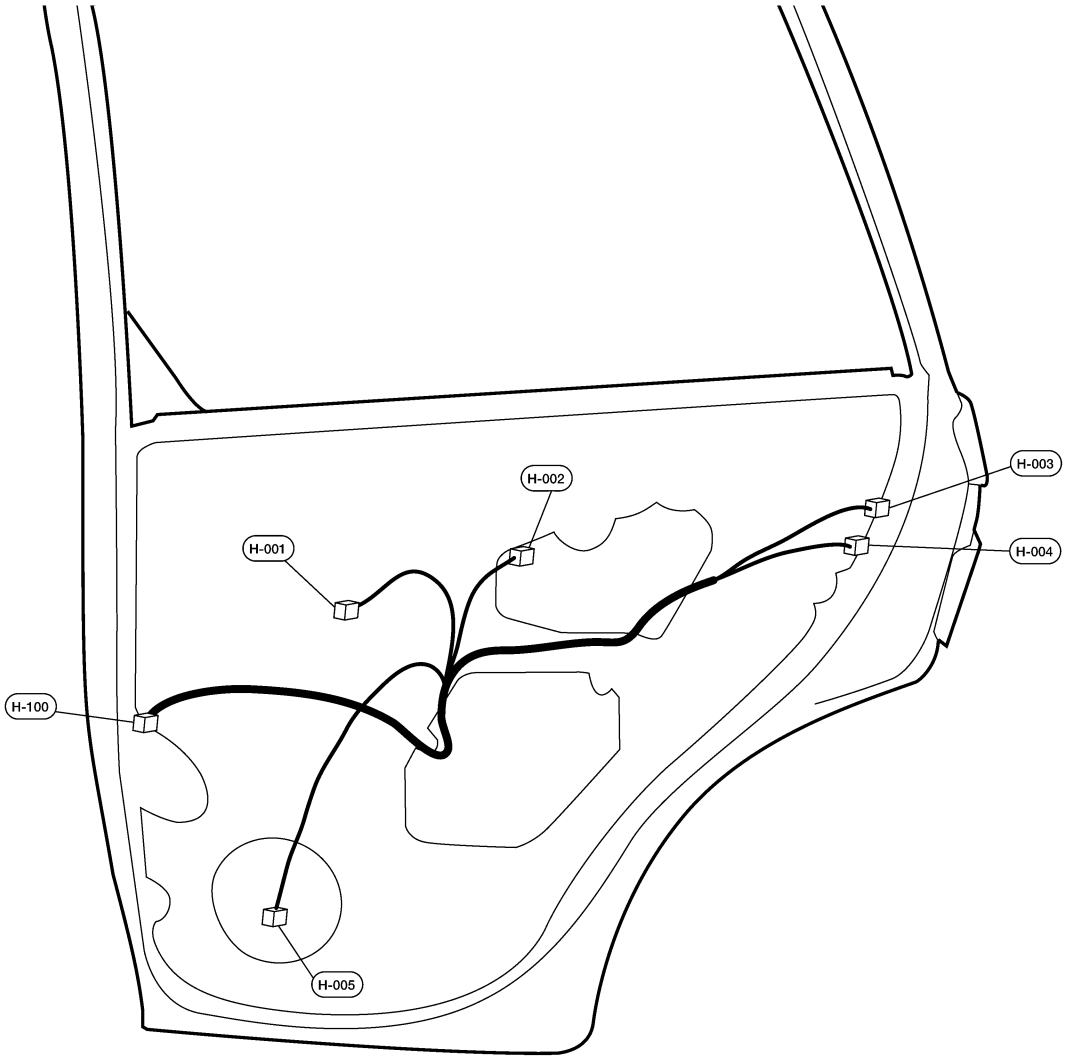

H-001	W/2	Rear Power Window Motor RH
H-002	B/10	Rear Power Window Switch RH
H-003	B/2	Rear Door Lock Assembly RH
H-004	GR/4	Rear Door Lock Assembly RH
H-005	B/2	Rear Speaker RH
H-100	W/14	To B-108

Downloaded from www.Manualslib.com manuals search engine

Back Door Harness

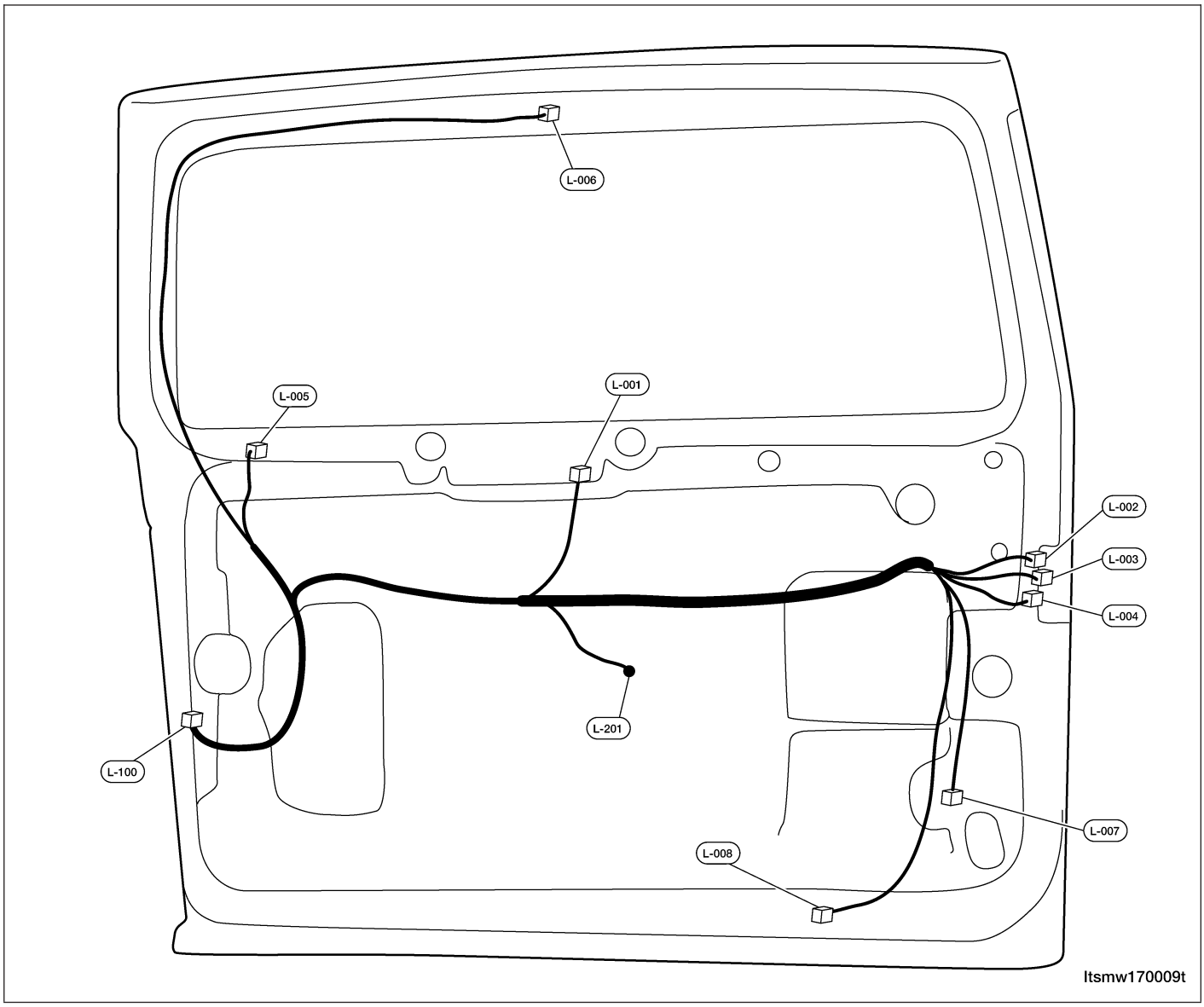

L-001	W/2	Rear Wiper Motor
L-002	B/2	Back Door Lock Assembly
L-003	GR/4	Back Door Lock Assembly
L-004	GR/4	Back Door Lock Assembly
L-005	B1	Rear Window Defogger
L-006	W/2	High Mounted Stop Lamp
L-007	B/2	Rear Fog Lamp
L-008	W/2	License Plate Lamp
L-100	W/14	To B-110
L-201	-	Ground

Downloaded from www.Manualslib.com manuals search engine

Restraints Harness

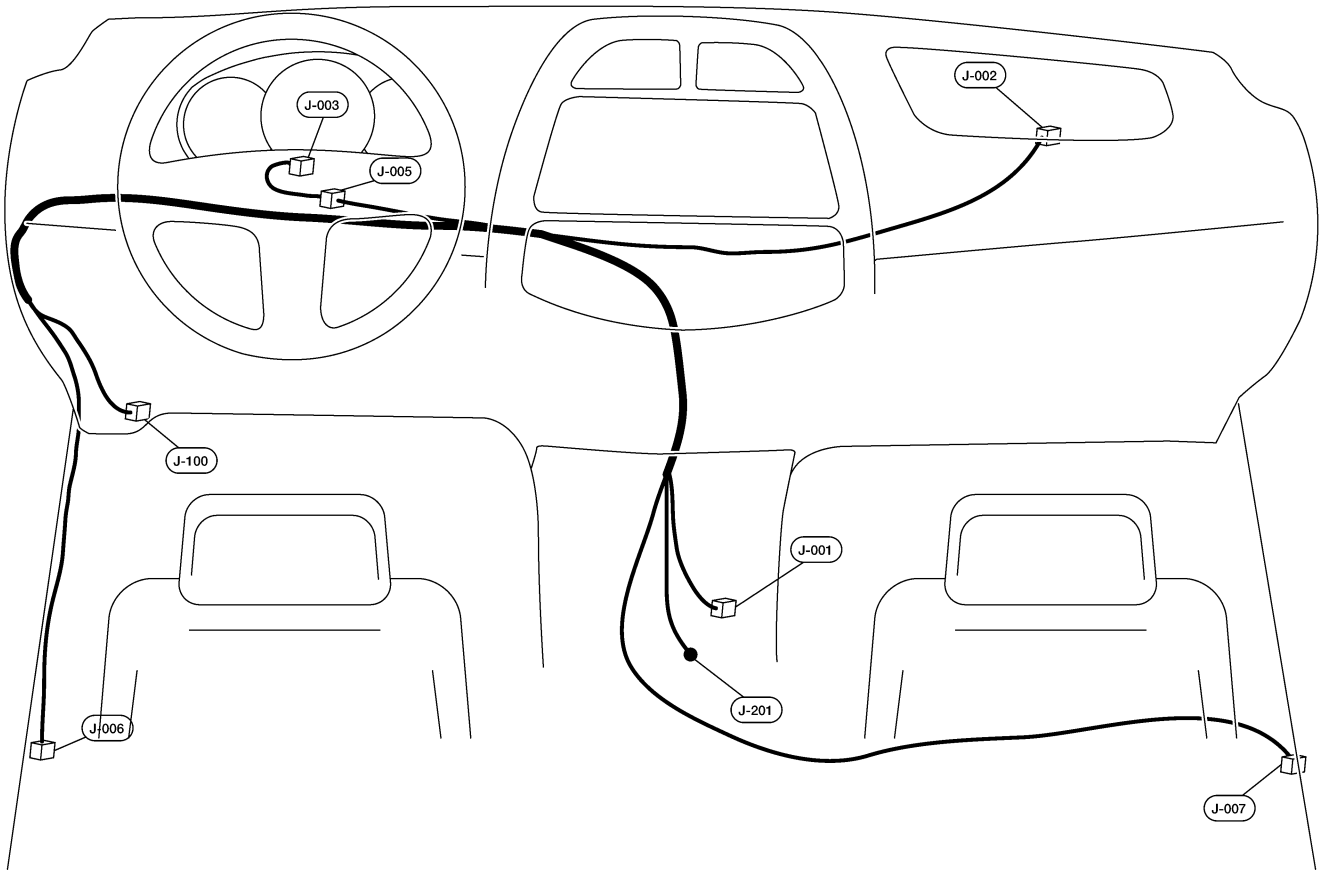

ltsmw170017t

J-001	W/25	Restraints Control Module
J-002	G/2	Front Passenger Airbag
J-003	G/2	Driver Airbag
J-005	B/2	Spiral Cable
J-006	W/2	Driver Seatbelt Pre-Tensioner
J-007	G/2	Passenger Seatbelt Pre-Tensioner
J-100	W/6	To C-106
J-201	-	Ground

Downloaded from www.Manualslib.com manuals search engine

A

A-Pillar Trim Panel, Body Interior 15-11
A/C System Evacuation and Recharge, System Plumbing 13-37
Accelerator Pedal Position (APP) Sensor, 2.0L Engine Controls 3-438
Accelerator Pedal Position Sensor, 1.6L & 1.8L Engine Controls 3-224
Accelerator Sensor, 1.6L & 1.8L Engine Controls 3-221
Accelerator Sensor, 2.0L Engine Controls 3-432
Accessory Drive Belt, 1.6L & 1.8L Engine Mechanical . . 2-17
Accessory Drive Belt, 2.0L Engine Mechanical 2-91
Accessory Drive Belt, 2.4L Engine Mechanical 2-167
Accumulator, System Plumbing 13-43
Air Cleaner Element, 1.6L & 1.8L Engine Mechanical . . . 2-18
Air Cleaner Element, 2.0L Engine Mechanical 2-92
Air Cleaner Element, 2.4L Engine Mechanical 2-168
Air Cleaner Housing, 1.6L & 1.8L Engine Mechanical . . . 2-18
Air Cleaner Housing, 2.0L Engine Mechanical 2-93
Air Cleaner Housing, 2.4L Engine Mechanical 2-169
Air Distribution 13-25
Air Flow Sensor - 1.8L, 1.6L & 1.8L Engine Controls . . 3-223
Air Flow Sensor, 2.0L Engine Controls 3-431
Air Flow Sensor, 2.4L Engine Controls 3-537
Airbag System 14-1
Airbag System Disarming Procedure, Airbag System . . . 14-46
Alignment 10-38
Antenna, Body Interior 15-10
Antilock Brake System (ABS) Bleeding Procedure, Antilock Brakes 12-76
Antilock Brake System (ABS) Hydraulic Control Module, Antilock Brakes 12-77
Antilock Brakes 12-34
Assist Handle, Body Interior 15-13
Audio System, Body Interior 15-4
Automatic Shifter Selector, DP0 Automatic Transaxle . . . 8-140
Automatic Shifter Selector, F4A4 Automatic Transaxle . . 8-243

B

B-Pillar Lower Trim Panel, Body Interior 15-11
B-Pillar Upper Trim Panel, Body Interior 15-12
Back Cargo Door, Body Exterior 15-175
Base Brakes 12-1
Battery Hold Down, Starting System 5-8
Battery Tray, Starting System 5-9
Battery, Starting System 5-7
Bleeding Hydraulic Clutch, Clutch System 8-325
Blower Motor Resistor, Manual Temperature Control . . . 13-16
Blower Motor, Air Distribution 13-30
Body Control Module (BCM), Body Interior 15-44
Body Control Module - BCM, Body Interior 15-38
Body Dimensions, Body Exterior 15-147
Body Exterior 15-145
Body Fuse and Relay Box, Vehicle Fuse Box Information 16-42
Body Interior 15-1
Body Interior Trim, Body Interior 15-11
Body, Body Exterior 15-157
Brake Bleeding, Base Brakes 12-9
Bumpers, Body Exterior 15-166

C

C-Pillar Lower Trim Panel, Body Interior 15-12
C-Pillar Upper Trim Panel, Body Interior 15-13
Camshaft Position (CMP) Sensor, 1.6L & 1.8L Engine Controls 3-220
Camshaft Position (CMP) Sensor, 2.0L Engine Controls 3-431
Camshaft Position (CMP) Sensor, 2.4L Engine Controls 3-536
Camshaft, 1.6L & 1.8L Engine Mechanical 2-20, 2-66
Camshaft, 2.0L Engine Mechanical 2-139, 2-94
Camshaft, 2.4L Engine Mechanical 2-171, 2-243
CAN Vehicle Communications, Body Interior 15-16
Canister Control Solenoid Valve 2.4L, Evaporative Emissions 3-584
Canister Control Valve 1.6L & 1.8L & 2.0L, Evaporative Emissions 3-584
Catalytic Converter, Exhaust System 7-6
Charging System 5-11
Chime, Body Interior 15-19
Clutch and Pressure Plate, Clutch System 8-319
Clutch Assembly Service, Clutch System 8-319
Clutch Master Cylinder, Clutch System 8-322
Clutch Slave Cylinder, Clutch System 8-324
Clutch System 8-316
Compressor, System Plumbing 13-39
Condenser, System Plumbing 13-42
Connecting Rods, 1.6L & 1.8L Engine Mechanical 2-58
Connecting Rods, 2.0L Engine Mechanical 2-131
Connecting Rods, 2.4L Engine Mechanical 2-229
Coolant Pump, Cooling System 6-16
Coolant Temperature Sensor (For Instrument Cluster), 2.4L Engine Controls 3-532
Cooling Fan, Cooling System 6-18

Downloaded from www.Manualslib.com manuals search engine

Cooling System 6-1
Cooling System Draining and Filling, Cooling System . . . 6-13
Crankshaft Position (CKP) Sensor, 1.6L & 1.8L Engine Controls 3-220
Crankshaft Position (CKP) Sensor, 2.0L Engine Controls 3-430
Crankshaft Position (CKP) Sensor, 2.4L Engine Controls 3-542
Crankshaft, 1.6L & 1.8L Engine Mechanical 2-60
Crankshaft, 2.0L Engine Mechanical 2-133
Crankshaft, 2.4L Engine Mechanical 2-233
Cylinder Head Cover, 1.6L & 1.8L Engine Mechanical . . . 2-19
Cylinder Head Cover, 2.0L Engine Mechanical 2-93
Cylinder Head Cover, 2.4L Engine Mechanical 2-170
Cylinder Head Unit Repair, 1.6L & 1.8L Engine Mechanical 2-63
Cylinder Head Unit Repair, 2.0L Engine Mechanical 2-136
Cylinder Head Unit Repair, 2.4L Engine Mechanical 2-241
Cylinder Head, 1.6L & 1.8L Engine Mechanical . . . 2-23, 2-63
Cylinder Head, 2.0L Engine Mechanical 2-136, 2-97
Cylinder Head, 2.4L Engine Mechanical 2-175, 2-241

D

Diagnosing Electrical Failures, Electrical Circuit Diagnosis Information 1-16
Diagnosis & Testing, 1.6L & 1.8L Engine Controls 3-22
Diagnosis & Testing, 1.6L & 1.8L Engine Mechanical . . . 2-13
Diagnosis & Testing, 2.0L Engine Controls 3-247
Diagnosis & Testing, 2.0L Engine Mechanical 2-87
Diagnosis & Testing, 2.4L Engine Controls 3-458
Diagnosis & Testing, 2.4L Engine Mechanical 2-163
Diagnosis & Testing, 5-Speed Manual Transaxle 8-259
Diagnosis & Testing, Air Distribution 13-28
Diagnosis & Testing, Airbag System 14-8
Diagnosis & Testing, Alignment 10-42
Diagnosis & Testing, Antilock Brakes 12-45
Diagnosis & Testing, Base Brakes 12-7
Diagnosis & Testing, Body Exterior 15-228
Diagnosis & Testing, Body Interior 15-113, 15-64
Diagnosis & Testing, Charging System 5-16
Diagnosis & Testing, DP0 Automatic Transaxle 8-19
Diagnosis & Testing, Drive Shaft (4x4) 9-26
Diagnosis & Testing, F4A4 Automatic Transaxle 8-158
Diagnosis & Testing, Front Axle 9-4
Diagnosis & Testing, Front Suspension 10-6
Diagnosis & Testing, Fuel Delivery System 4-12
Diagnosis & Testing, Manual Temperature Control 13-12
Diagnosis & Testing, Parking Brake 12-82
Diagnosis & Testing, Power Steering Pump 11-33
Diagnosis & Testing, Rear Axle 9-11
Diagnosis & Testing, Rear Suspension 10-29
Diagnosis & Testing, Steering Column 11-11
Diagnosis & Testing, Steering Gear 11-20
Diagnosis & Testing, Steering System 11-4
Diagnosis & Testing, System Plumbing 13-35
Diagnosis & Testing, Wheels and Tires 10-50
Diagnosis and Testing, Cooling System 6-11
Diagnosis and Testing, Exhaust System 7-4
Diagnosis and Testing, Starting System 5-6
Diagnostic Help, Antilock Brakes 12-45
Diagnostic Trouble Code (DTC) List, Airbag System 14-9
Diagnostic Trouble Code (DTC) List, Antilock Brakes . . . 12-46
Diagnostic Trouble Code (DTC) List, Body Interior 15-114, 15-65
Diagnostic Trouble Code (DTC) List, DP0 Automatic Transaxle 8-20
Diagnostic Trouble Code (DTC) List, F4A4 Automatic Transaxle 8-159
Diagnostic Trouble Code (DTC) Tests, 1.6L & 1.8L Engine Controls 3-35
Diagnostic Trouble Code (DTC) Tests, 2.0L Engine Controls 3-261
Diagnostic Trouble Code (DTC) Tests, 2.4L Engine Controls 3-469
Diagnostic Trouble Code (DTC) Tests, Airbag System . . 14-11
Diagnostic Trouble Code (DTC) Tests, Antilock Brakes . . 12-47
Diagnostic Trouble Code (DTC) Tests, Body Interior 15-117, 15-66
Diagnostic Trouble Code (DTC) Tests, DP0 Automatic Transaxle 8-22
Diagnostic Trouble Code (DTC) Tests, F4A4 Automatic Transaxle 8-160
Differential Carrier, Front Differential 8-312
Differential Unit Repair, Front Differential 8-312
Door Lock Assembly, Body Interior 15-35
Door Lock Switch, Body Interior 15-35
Door Locks, Body Interior 15-29
Doors, Body Exterior 15-167
DP0 Automatic Transaxle 8-1
DP0 Automatic Transaxle Assembly, DP0 Automatic Transaxle 8-136
Drive Shaft (4x4) 9-24
Driver Side Airbag, Airbag System 14-46

Downloaded from www.Manualslib.com manuals search engine

E

ECM Power Supply and Ground Circuit Test, 1.6L & 1.8L Engine Controls . . . 3-28
ECM Power Supply and Ground Circuit Test, 2.0L Engine Controls . . . 3-254
ECM Power Supply and Ground Circuit Test, 2.4L Engine Controls . . . 3-462
EGR Control Solenoid Valve 2.4L, Evaporative Emissions . . . 3-587
EGR Valve 2.4L, Evaporative Emissions . . . 3-588
Electrical Circuit Diagnosis Information . . . 1-15
Electrical Components, Wiring Information . . . 16-9
Electrical Information . . . 1-20
Electrical Repair, Wiring Information . . . 16-8
Electrical Schematics, Vehicle Ground Distribution . . . 16-29
Electrical Schematics, Vehicle Power Distribution . . . 16-14
Electrical Troubleshooting Tools, Wiring Information . . . 16-6
Electrical Troubleshooting, Wiring Information . . . 16-5
Electronic Throttle Control Actuator, 1.6L & 1.8L Engine Controls . . . 3-225
Electronic Throttle Control Actuator, 2.0L Engine Controls . . . 3-439
Engine Assembly, 1.6L & 1.8L Engine Mechanical . . . 2-31
Engine Assembly, 2.0L Engine Mechanical . . . 2-105
Engine Assembly, 2.4L Engine Mechanical . . . 2-183
Engine Block, 1.6L & 1.8L Engine Mechanical . . . 2-50
Engine Block, 2.0L Engine Mechanical . . . 2-123
Engine Block, 2.4L Engine Mechanical . . . 2-217
Engine Control Module (ECM), 1.6L & 1.8L Engine Controls . . . 3-226
Engine Control Module (ECM), 2.0L Engine Controls . . . 3-440
Engine Control Module (ECM), 2.4L Engine Controls . . . 3-539
Engine Coolant Temperature (ECT) Sensor, 1.6L & 1.8L Engine Controls . . . 3-217
Engine Coolant Temperature (ECT) Sensor, 2.0L Engine Controls . . . 3-427
Engine Coolant Temperature (ECT) Sensor, 2.4L Engine Controls . . . 3-531
Engine Mounts, 1.6L & 1.8L Engine Mechanical . . . 2-29
Engine Mounts, 2.0L Engine Mechanical . . . 2-103
Engine Mounts, 2.4L Engine Mechanical . . . 2-181
Engine Timing Belt, 1.6L & 1.8L Engine Mechanical . . . 2-38
Engine Timing Belt, 2.0L Engine Mechanical . . . 2-112
Engine Timing Belt, 2.4L Engine Mechanical . . . 2-189
Engine Unit Repair, 1.6L & 1.8L Engine Mechanical . . . 2-50
Engine Unit Repair, 2.0L Engine Mechanical . . . 2-123
Engine Unit Repair, 2.4L Engine Mechanical . . . 2-217
Evaporative Emissions . . . 3-576
Evaporator, System Plumbing . . . 13-42
Exhaust Manifold, 1.6L & 1.8L Engine Mechanical . . . 2-41
Exhaust Manifold, 2.0L Engine Mechanical . . . 2-115
Exhaust Manifold, 2.4L Engine Mechanical . . . 2-200
Exhaust Pipe Assembly, Exhaust System . . . 7-5
Exhaust System . . . 7-1
Exterior Lamps, Body Exterior . . . 15-178

F

F4A4 Automatic Transaxle . . . 8-143
F4A4 Automatic Transaxle Assembly, F4A4 Automatic Transaxle . . . 8-240
Fastener Usage, Vehicle Information . . . 1-14
Fender, Body Exterior . . . 15-199
Frame, Body Exterior . . . 15-153
Front Axle . . . 9-1
Front Axle Shaft, Front Axle . . . 9-6
Front Body Structure, Body Exterior . . . 15-148
Front Brake Caliper, Base Brakes . . . 12-18, 12-27
Front Brake Pads, Base Brakes . . . 12-24
Front Brake Rotor, Base Brakes . . . 12-21
Front Bumper, Body Exterior . . . 15-166
Front Coil Spring, Front Suspension . . . 10-16
Front Combination Lamp Assembly, Body Exterior . . . 15-189
Front Crankshaft Oil Seal, 1.6L & 1.8L Engine Mechanical . . . 2-25
Front Crankshaft Oil Seal, 2.0L Engine Mechanical . . . 2-99
Front Crankshaft Oil Seal, 2.4L Engine Mechanical . . . 2-177
Front Differential . . . 8-307
Front Door Weatherstrip, Body Exterior . . . 15-231
Front Door, Body Exterior . . . 15-168
Front Fender, Body Exterior . . . 15-199
Front Fog Lamp, Body Exterior . . . 15-192
Front Fuse and Relay Box, Vehicle Fuse Box Information . . . 16-40
Front Hub and Bearing, Front Axle . . . 9-5
Front Intermediate Drive Shaft, Drive Shaft (4x4) . . . 9-27
Front Lower Control Arm, Front Suspension . . . 10-9
Front Passenger Side Airbag, Airbag System . . . 14-47
Front Room Lamp, Body Interior . . . 15-91
Front Seat Belt and Pre-Tensioner, Seat Belt System . . . 14-52
Front Seat, Body Interior . . . 15-106
Front Stabilizer Bar Link, Front Suspension . . . 10-11
Front Stabilizer Bar, Front Suspension . . . 10-12
Front Steering Knuckle, Front Suspension . . . 10-7
Front Structure, Body Exterior . . . 15-151
Front Strut Assembly, Front Suspension . . . 10-13

Downloaded from www.Manualslib.com manuals search engine

Front Strut, Front Suspension 10-21
Front Sub-Frame Assembly, Front Suspension 10-17
Front Suspension 10-1
Front Wheel Alignment, Alignment 10-44
Front Wheel Speed Sensor, Antilock Brakes 12-77
Front Windshield, Body Exterior 15-219
Front Wiper Arm, Body Exterior 15-240
Front Wiper Link, Body Exterior 15-241
Front Wiper Motor, Body Exterior 15-238
Fuel Delivery System 4-1
Fuel Door, Body Exterior 15-200
Fuel Door, Body Exterior 200
Fuel Filter, Fuel Delivery System 4-18
Fuel Injector Rail, Fuel Delivery System 4-19
Fuel Injector, Fuel Delivery System 4-20
Fuel Pressure Regulator - With Mitsubishi 2.4L Engine, Fuel Delivery System 4-23
Fuel Pressure Relief Procedure, Fuel Delivery System . . . 4-15
Fuel Pump, Fuel Delivery System 4-15

G

Gear Selector & Shifter Assembly, 5-Speed Manual Transaxle 8-264
General Information, 1.6L & 1.8L Engine Controls 3-3
General Information, 1.6L & 1.8L Engine Mechanical 2-3
General Information, 2.0L Engine Controls 3-229
General Information, 2.0L Engine Mechanical 2-77
General Information, 2.4L Engine Controls 3-442
General Information, 2.4L Engine Mechanical 2-151
General Information, 5-Speed Manual Transaxle 8-247
General Information, Air Distribution 13-26
General Information, Airbag System 14-2
General Information, Alignment 10-39
General Information, Antilock Brakes 12-35
General Information, Base Brakes 12-2
General Information, Body Interior 15-104
General Information, Charging System 5-12
General Information, Clutch System 8-317
General Information, Cooling System 6-2
General Information, DP0 Automatic Transaxle 8-3
General Information, Drive Shaft (4x4) 9-25
General Information, Evaporative Emissions 3-577
General Information, Exhaust System 7-2
General Information, F4A4 Automatic Transaxle 8-144
General Information, Front Axle 9-2
General Information, Front Differential 8-308
General Information, Front Suspension 10-2
General Information, Fuel Delivery System 4-2
General Information, Ignition Control 3-566
General Information, Interactive Torque Management (ITM) System (4x4) 9-17
General Information, Manual Temperature Control 13-2
General Information, Parking Brake 12-80
General Information, Power Steering Pump 11-32
General Information, Rear Axle 9-9
General Information, Rear Suspension 10-26
General Information, Seat Belt System 14-51
General Information, Starting System 5-2
General Information, Steering Column 11-9
General Information, Steering Gear 11-19
General Information, Steering System 11-2
General Information, System Controls 13-19
General Information, System Plumbing 13-33
General Information, Transfer Case (4x4) 8-327
General Information, Vehicle Fuse Box Information 16-38
General Information, Vehicle Ground Distribution 16-28
General Information, Vehicle Power Distribution 16-13
General Information, Vehicle Wiring Harness Layout . . . 16-45
General Information, Wheels and Tires 10-48
General Information, Wiring Information 16-2
Generator, Charging System 5-17
Grille, Body Exterior 15-201
Grille, Body Exterior 201

H

Headlamp, Body Exterior 15-191
Headliner, Body Interior 15-15
Heated Seat Element, Body Interior 15-109
Heated Seat Switch, Body Interior 15-109
Heater Core, System Plumbing 13-47
High Mounted Stop Lamp, Body Exterior 15-197
Hood Release Cable, Body Exterior 15-203
Hood, Body Exterior 15-202
Hood, Body Exterior 202
Horn, Body Exterior 15-206, 15-208
How To Locate Electrical Schematics In The Service Manual, Electrical Information 1-25
How To Read Electrical Schematics, Electrical Information 1-21
How To Use This Manual, Service Information 1-2
HVAC Housing, Air Distribution 13-29

Downloaded from www.Manualslib.com manuals search engine

I

Idle Air Control (IAC) Motor, 2.4L Engine Controls 3-541
Idler Pulley, 1.6L & 1.8L Engine Mechanical 2-45
Idler Pulley, 2.0L Engine Mechanical 2-119
Ignition Coil 1.6L & 1.8L & 2.0L, Ignition Control 3-571
Ignition Coil 2.4L, Ignition Control 3-572
Ignition Control 3-565
Immobilizer Control Module, Body Interior . . . 15-110, 15-144
Input Shaft, 5-Speed Manual Transaxle 8-278
Instrument Cluster, Body Interior 15-52, 15-84
Instrument Panel, Body Interior 15-45
Intake Manifold, 1.6L & 1.8L Engine Mechanical 2-43
Intake Manifold, 2.0L Engine Mechanical 2-117
Intake Manifold, 2.4L Engine Mechanical 2-201
Interactive Torque Management (ITM) Control Module, Interactive Torque Management (ITM) System (4x4) 9-23
Interactive Torque Management (ITM) Controller, Interactive Torque Management (ITM) System (4x4) . . 9-21
Interactive Torque Management (ITM) System (4x4) 9-16
Interior Lamps, Body Interior 15-85
International Symbols, Vehicle Information 1-13

K

Key Hole Lamp, Body Interior 15-92
Knock Sensor, 1.6L & 1.8L Engine Controls 3-218
Knock Sensor, 2.0L Engine Controls 3-428
Knock Sensor, 2.4L Engine Controls 3-533

L

License Plate Lamp, Body Exterior 15-197
Liquid Line, System Plumbing 13-44
Lower Balance Shaft, 2.4L Engine Mechanical 2-208
Lower Console, Body Interior 15-50
Luggage Rack, Body Exterior 15-204
Luggage Rack, Body Exterior 204

M

Manifold Absolute Pressure Sensor - 1.6L, 1.6L & 1.8L Engine Controls 3-222
Manual Temperature Control 13-1
Manual Temperature Control Module, Manual Temperature Control 13-15
Manual Transaxle Assembly, 5-Speed Manual Transaxle 8-260
Manual Transaxle Unit Repair, 5-Speed Manual Transaxle 8-270
Master Cylinder - LHD, Base Brakes 12-11
Master Cylinder - RHD, Base Brakes 12-12
Middle/Rear Courtesy/Dome Lamp, Body Interior 15-91
Mirrors, Body Exterior 15-209
Muffler, Exhaust System 7-6

N

Negative Battery Cable, Starting System 5-8

O

Oil Filter, 1.6L & 1.8L Engine Mechanical 2-46
Oil Filter, 2.0L Engine Mechanical 2-119
Oil Filter, 2.4L Engine Mechanical 2-212
Oil Pan, 1.6L & 1.8L Engine Mechanical 2-47
Oil Pan, 2.0L Engine Mechanical 2-120
Oil Pan, 2.4L Engine Mechanical 2-213
Oil Pump, 1.6L & 1.8L Engine Mechanical 2-48
Oil Pump, 2.0L Engine Mechanical 2-121
Oil Pump, 2.4L Engine Mechanical 2-215
Oil Strainer, 1.6L & 1.8L Engine Mechanical 2-49
Oil Strainer, 2.0L Engine Mechanical 2-122
Oil Strainer, 2.4L Engine Mechanical 2-216
On-Vehicle Service, 1.6L & 1.8L Engine Controls 3-217
On-Vehicle Service, 1.6L & 1.8L Engine Mechanical 2-17
On-Vehicle Service, 2.0L Engine Controls 3-427
On-Vehicle Service, 2.0L Engine Mechanical 2-91
On-Vehicle Service, 2.4L Engine Controls 3-531
On-Vehicle Service, 2.4L Engine Mechanical 2-167
On-Vehicle Service, 5-Speed Manual Transaxle 8-260
On-Vehicle Service, Air Distribution 13-29
On-Vehicle Service, Airbag System 14-46
On-Vehicle Service, Alignment 10-44
On-Vehicle Service, Antilock Brakes 12-76
On-Vehicle Service, Base Brakes 12-9
On-Vehicle Service, Body Exterior 15-229
On-Vehicle Service, Body Interior 15-144, 15-44, 15-84
On-Vehicle Service, Charging System 5-17
On-Vehicle Service, Cooling System 6-13
On-Vehicle Service, DP0 Automatic Transaxle 8-136
On-Vehicle Service, Drive Shaft (4x4) 9-27
On-Vehicle Service, Evaporative Emissions 3-584
On-Vehicle Service, Exhaust System 7-5
On-Vehicle Service, F4A4 Automatic Transaxle 8-240
On-Vehicle Service, Front Axle 9-5
On-Vehicle Service, Front Suspension 10-7
On-Vehicle Service, Fuel Delivery System 4-15
On-Vehicle Service, Ignition Control 3-571

Downloaded from www.Manualslib.com manuals search engine

On-Vehicle Service, Interactive Torque Management (ITM) System (4x4) 9-21
On-Vehicle Service, Manual Temperature Control 13-15
On-Vehicle Service, Parking Brake 12-84
On-Vehicle Service, Power Steering Pump 11-34
On-Vehicle Service, Rear Axle 9-12
On-Vehicle Service, Rear Suspension 10-30
On-Vehicle Service, Seat Belt System 14-52
On-Vehicle Service, Starting System 5-7
On-Vehicle Service, Steering Column 11-12
On-Vehicle Service, Steering Gear 11-21
On-Vehicle Service, Steering System 11-6
On-Vehicle Service, System Controls 13-24
On-Vehicle Service, System Plumbing 13-37
On-Vehicle Service, Transfer Case (4x4) 8-328
On-Vehicle Service, Wheels and Tires 10-51
Output Gear For Reverse Gear, 5-Speed Manual Transaxle 8-296
Output Shaft, 5-Speed Manual Transaxle 8-287
Outside Mirror, Body Exterior 15-214
Oxygen Sensor, 1.6L & 1.8L Engine Controls 3-218
Oxygen Sensor, 2.0L Engine Controls 3-428
Oxygen Sensor, 2.4L Engine Controls 3-533

P

Paint Codes, Body Exterior 15-215
Paint, Body Exterior 15-215
Parking Brake 12-79
Parking Brake Cable, Parking Brake 12-85
Parking Brake Lever, Parking Brake 12-84
Parking Brake Shoes, Parking Brake 12-86
Pedal Pad, Body Interior 15-14
Pistons, 1.6L & 1.8L Engine Mechanical 2-53
Pistons, 2.0L Engine Mechanical 2-126
Pistons, 2.4L Engine Mechanical 2-221
Positive Battery Cable, Starting System 5-8
Power Brake Booster - LHD, Base Brakes 12-14
Power Brake Booster - RHD, Base Brakes 12-16
Power Fuse Box, Vehicle Fuse Box Information 16-38
Power Outlet, Body Interior 15-93
Power Steering Filling and Flushing, Steering System . . . 11-6
Power Steering Fluid Reservoir, Power Steering Pump 11-36
Power Steering Pressure and Return Lines - 1.6L & 1.8L & 2.0L, Power Steering Pump . . 11-37
Power Steering Pressure and Return Lines - 2.4L, Power Steering Pump 11-39
Power Steering Pump 11-31
Power Steering Pump - 1.6L & 1.8L & 2.0L, Power Steering Pump 11-34
Power Steering Pump - 2.4L, Power Steering Pump . . . 11-35
Power Window Motor, Body Interior 15-100
Power Window Switch, Body Interior 15-100
Power Window, Body Interior 15-96
Proper Service Practices, Service Information 1-5

R

Radiator Support, Body Exterior 15-216
Radiator Support, Body Exterior 216
Radiator, Cooling System 6-17
Radio, Body Interior 15-8
Rear Axle 9-8
Rear Axle Assembly (4x4), Rear Axle 9-13
Rear Brake Backing Plate, Base Brakes 12-23
Rear Brake Caliper, Base Brakes 12-19, 12-30
Rear Brake Pads, Base Brakes 12-25
Rear Brake Rotor, Base Brakes 12-22
Rear Coil Spring, Rear Suspension 10-33
Rear Combination Lamp Assembly, Body Exterior 15-190
Rear Crankshaft Oil Seal, 1.6L & 1.8L Engine Mechanical 2-27
Rear Crankshaft Oil Seal, 2.0L Engine Mechanical 2-100
Rear Crankshaft Oil Seal, 2.4L Engine Mechanical 2-179
Rear Door Weatherstrip, Body Exterior 15-232
Rear Door, Body Exterior 15-173
Rear Fog Lamp, Body Exterior 15-193
Rear Hub and Bearing, Rear Axle 9-12
Rear Intermediate Drive Shaft, Drive Shaft (4x4) 9-27
Rear Lower Control Arm, Rear Suspension 10-30
Rear Seat Belt and Pre-Tensioner, Seat Belt System . . . 14-54
Rear Seats, Body Interior 15-107
Rear Shock Absorber, Rear Suspension 10-32
Rear Stabilizer Bar Link, Rear Suspension 10-32
Rear Suspension 10-25
Rear Trailing Arm Assembly, Rear Suspension 10-35
Rear Upper Control Arm, Rear Suspension 10-31
Rear Wheel Alignment, Alignment 10-45
Rear Wheel Speed Sensor, Antilock Brakes 12-78
Rear Window, Body Exterior 15-221
Rear Wiper Arm, Body Exterior 15-240
Rear Wiper Motor, Body Exterior 15-239
Recirculation Door Actuator, System Controls 13-24
Remote Keyless Entry (RKE) Inoperative, Body Interior 15-115
Restraints Control Module (RCM), Airbag System 14-49

Downloaded from www.Manualslib.com manuals search engine

S

Scuff Plate, Body Interior 15-14
Seat Belt Slider Track, Seat Belt System 14-53
Seat Belt System 14-50
Seats, Body Interior 15-104
Service Information 1-1
Spare Tire Support, Body Exterior 15-205
Spare Tire Support, Body Exterior 205
Spark Plug 1.6L & 1.8L & 2.0L, Ignition Control 3-574
Spark Plug 2.4L, Ignition Control 3-575
Spark Plug Wire 1.6L & 1.8L & 2.0L, Ignition Control 3-573
Spark Plug Wire 2.4L, Ignition Control 3-574
Speed Control System, 2.0L Engine Controls 3-432
Starter Motor Assembly, Starting System 5-9
Starting System 5-1
Stationary Glass, Body Exterior 15-217
Steering Column 11-8
Steering Column Shaft, Steering Column 11-15
Steering Column Shroud, Steering Column 11-14
Steering Gear 11-18
Steering Gear - LHD, Steering Gear 11-21
Steering Gear - RHD, Steering Gear 11-25
Steering System 11-1
Steering Wheel, Steering Column 11-12
Suction Line, System Plumbing 13-45
Sun Visor, Body Interior 15-14
Sunroof Control Module, Body Exterior 15-230
Sunroof Glass, Body Exterior 15-229
Sunroof Motor, Body Exterior 15-230
Sunroof Sun Visor, Body Exterior 15-229
Sunroof, Body Exterior 15-224
Symptom Diagnostic Tests, 2.4L Engine Symptom Diagnosis 3-544
System Controls 13-18
System Plumbing 13-32

T

Tail/Backup/Stop Lamp, Body Exterior 15-194
Thermostat, Cooling System 6-14
Throttle Control Actuator, 2.4L Engine Controls 3-538
Throttle Position Sensor (TPS), 2.4L Engine Controls . . 3-540
Tie Rod, Steering Gear 11-29
Timing Belt Automatic Tensioner, 2.4L Engine Mechanical 2-196
Tire Repair, Wheels and Tires 10-51
Tire Rotation, Wheels and Tires 10-53
Transaxle Clutch Housing Assembly, 5-Speed Manual Transaxle 8-301
Transaxle Control Module (TCM), DP0 Automatic Transaxle 8-142
Transaxle Main Housing Assembly, 5-Speed Manual Transaxle 8-305
Transaxle, 5-Speed Manual Transaxle 8-270
Transfer Case (4x4) 8-326
Transfer Case Unit Repair, Transfer Case (4x4) 8-329
Transfer Case, Transfer Case (4x4) 8-328, 8-329
Turn Signal Lamp, Body Exterior 15-195

U

Unit Repair, Base Brakes 12-27
Unit Repair, Front Suspension 10-21
Upper Balance Shaft Timing Belt, 2.4L Engine Mechanical 2-198
Upper Balance Shaft, 2.4L Engine Mechanical 2-204

V

Valve & Valve Guides, 1.6L & 1.8L Engine Mechanical . . 2-70
Valve & Valve Guides, 2.0L Engine Mechanical 2-143
Valve & Valve Guides, 2.4L Engine Mechanical 2-246
Valve Springs, 1.6L & 1.8L Engine Mechanical 2-73
Valve Springs, 2.0L Engine Mechanical 2-146
Valve Springs, 2.4L Engine Mechanical 2-252
Vapor Canister 1.6L & 1.8L & 2.0L, Evaporative Emissions 3-585
Vapor Canister 2.4L, Evaporative Emissions 3-586
Vehicle Clearance, Body Exterior 15-154
Vehicle Fuse Box Information 16-37
Vehicle Ground Distribution 16-27
Vehicle Harness Routing Maps, Vehicle Wiring Harness Layout 16-46
Vehicle Identification Number (VIN), Vehicle Information 1-10
Vehicle Information 1-9
Vehicle Power Distribution 16-12
Vehicle Service Preparation, Service Information 1-3
Vehicle Speed Sensor, 1.6L & 1.8L Engine Controls . . . 3-221
Vehicle Wiring Harness Layout 16-44

Downloaded from www.Manualslib.com manuals search engine

W

Washer Bottle, Body Exterior 15-241
Washer Pump, Body Exterior 15-241
Weatherstrip, Body Exterior 15-231
Wheel Assembly, Wheels and Tires 10-52
Wheel Balance, Wheels and Tires 10-52
Wheels and Tires 10-47
Wiper Switch, Body Exterior 15-242
Wipers and Washers, Body Exterior 15-233
Wiring Information 16-1

Downloaded from www.Manualslib.com manuals search engine