FOREWORD

This repair manual has been prepared to provide information on the repair methods (including cutting and welding operations, but excluding painting) for collision-damaged body components of the TOYOTA SUPRA.

Applicable models: JZA80 series

This manual consists of body repair methods, exploded diagrams and illustrations of the body components and other information relating to body panel replacement such as handling precautions, etc. However, it should be noted that the front fenders of the TOYOTA models are bolted on and require no welding.

Body construction will sometimes differ depending on specifications and country of destination. Therefore, please keep in mind that the information contained herein is based on vehicles for general destinations.

For the repair procedures and specifications other than collisiondamaged body components of the TOYOTA SUPRA refer to the following repair manuals.

Manual Name	Pub. No.
(USA and CANADA)	
• SUPRA Repair Manual	M/Y Version
• Supra Electrical Wiring Diagram Manual	M/Y Version
• 1/2 SUPRA New Car Features (Models except USA and CANADA)	NCF096U
• SUPRA Chassis and Body Repair Manual	RM344E
• Supra Electrical Wiring Diagram Manual	EWD175Y
• SUPRA New Car Features (All Countries)	NCF097E
• Fundamental Painting Procedures	BRM024E
• Fundamental Body Repair Procedures	BRM002E

If you require the above manuals, please contact your TOYOTA Dealer.

All information contained in this manual is the most up-to-date at the time of publication. However, specifications and procedures are subject to change without prior notice.

TOYOTA MOTOR CORPORATION

HOW TO USE THIS MANUAL

Each repair method description provided in Section RE of this manual comprises two pages, divided into 2 blocks (REMOVAL AND INSTALLATION) and includes illustrations to facilitate body repair.

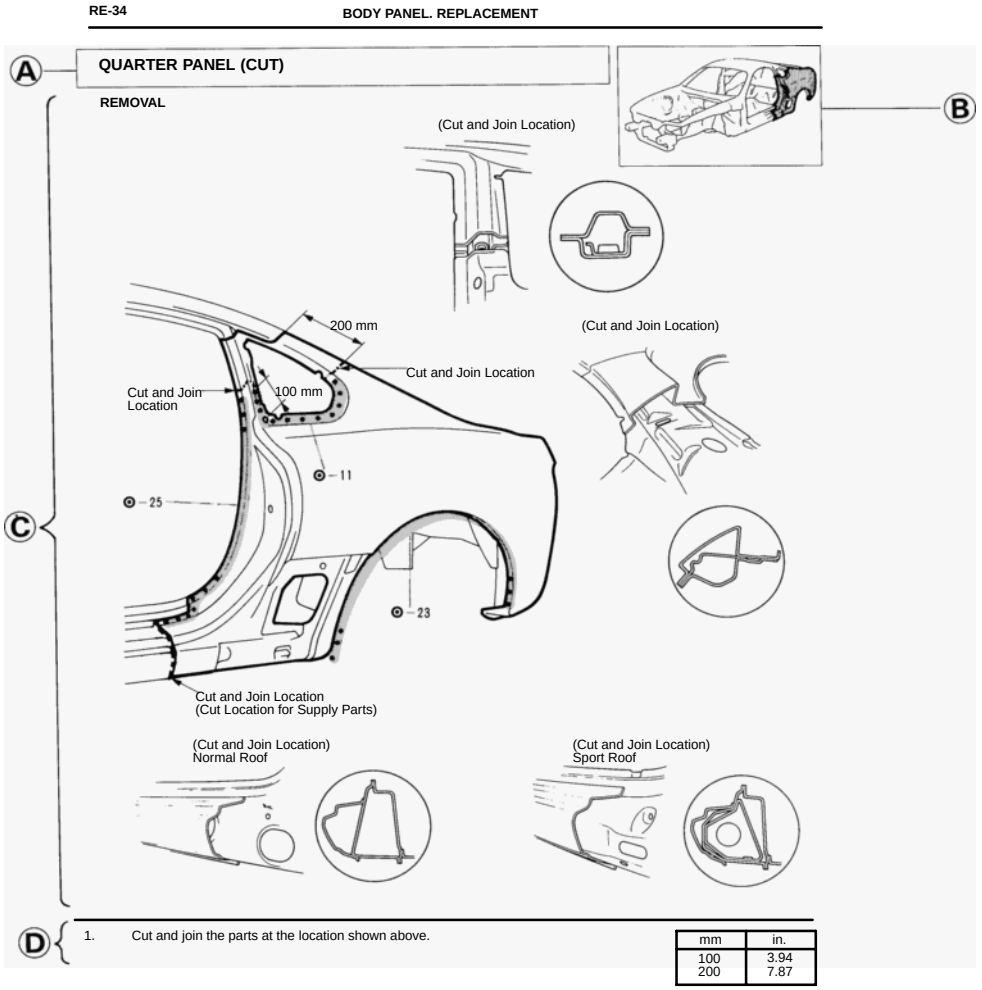

Ⓐ : **REPLACEMENT PARTS AND METHOD**

QUARTER PANEL (CUT)

- Replacement method
  - (ASSY) . . . . . Assembly replacement
  - (CUT) . . . . . Major cutting (less than 1/2 of parts used)
  - (CUT-H) . . . . Half cutting (about 1/2 of parts used)
  - (CUT-P) . . . . Partial cutting (most of parts used)
- Replacement parts

Ⓑ : **PARTS LOCATION**

Ⓒ : **REMOVAL DIAGRAM**
Describes in detail removal of the damaged parts involving repair by cutting.

Ⓓ : **REMOVAL GUIDE**
Provides additional information to more efficiently help you perform the removal.

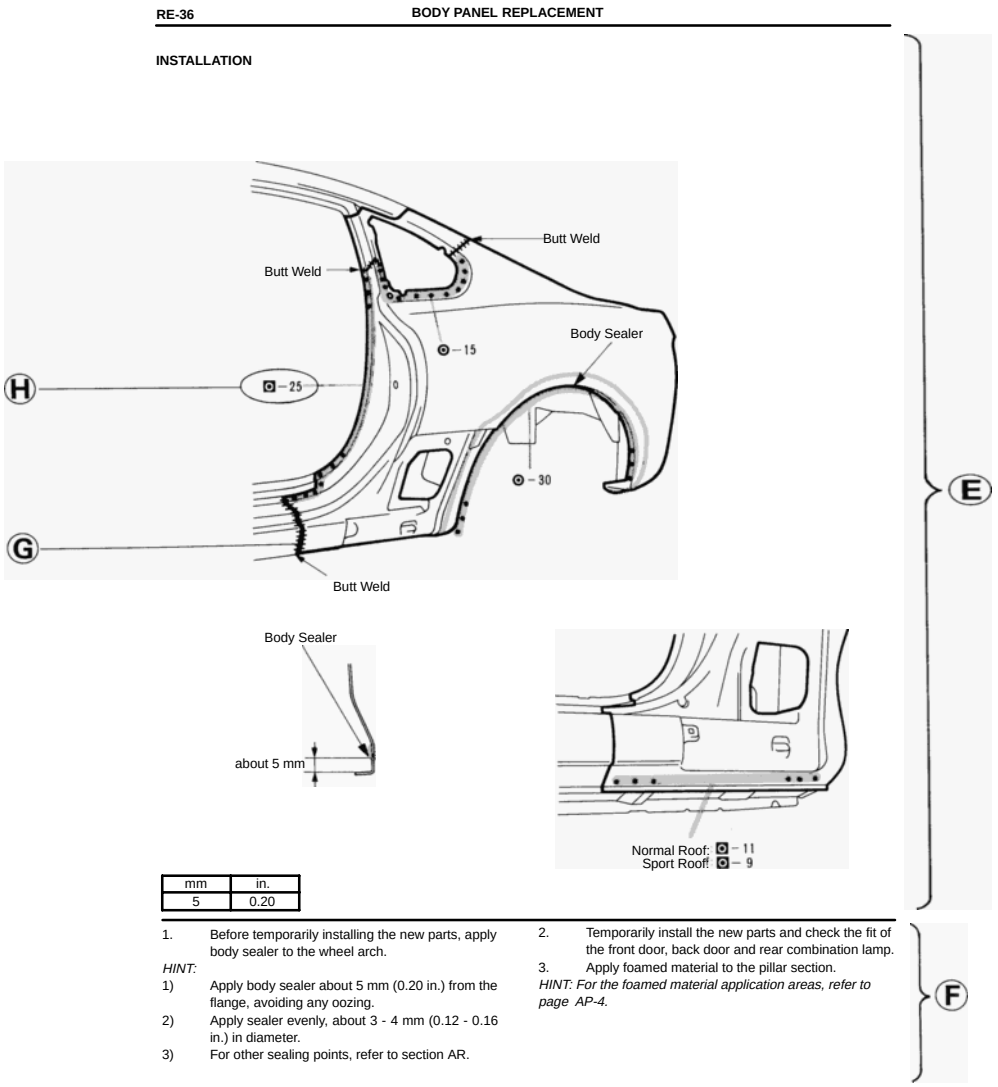

mm	in.
5	0.20

1. Before temporarily installing the new parts, apply body sealer to the wheel arch.

HINT:

1) Apply body sealer about 5 mm (0.20 in.) from the flange, avoiding any oozing.
2) Apply sealer evenly, about 3 - 4 mm (0.12 - 0.16 in.) in diameter.
3) For other sealing points, refer to section AR.

2. Temporarily install the new parts and check the fit of the front door, back door and rear combination lamp.
3. Apply foamed material to the pillar section.

HINT: For the foamed material application areas, refer to page AP-4.

Ⓔ : **INSTALLATION DIAGRAM**
Describes in detail installation of the new parts involving repair by welding and/or cutting, but excluding painting.

Ⓕ : **INSTALLATION GUIDE**
Provides additional information to more efficiently help you perform the installation.

Ⓖ : **SYMBOLS**
See page IN-4 .

Ⓗ : **ILLUSTRATION OF WELD POINTS**
Weld method and panel position symbols.
See page IN-5 .

SYMBOLS

The following symbols are used in the welding Diagrams in Section RE of this manual to indicate cutting areas and the types of weld required.

SYMBOLS	MEANING	ILLUSTRATION
	SAW CUT OR ROUGH CUT	
	REMOVE BRAZE	
	WELD POINTS SPOT WELD OR MIG PLUG WELD (See page IN-5)	
	CONTINUOUS MIG WELD (BUTT WELD OR TACK WELD)	
	BRAZE	
	BODY SEALER	

Illustration of Weld Point Symbols

EXAMPLE:

REMOVAL

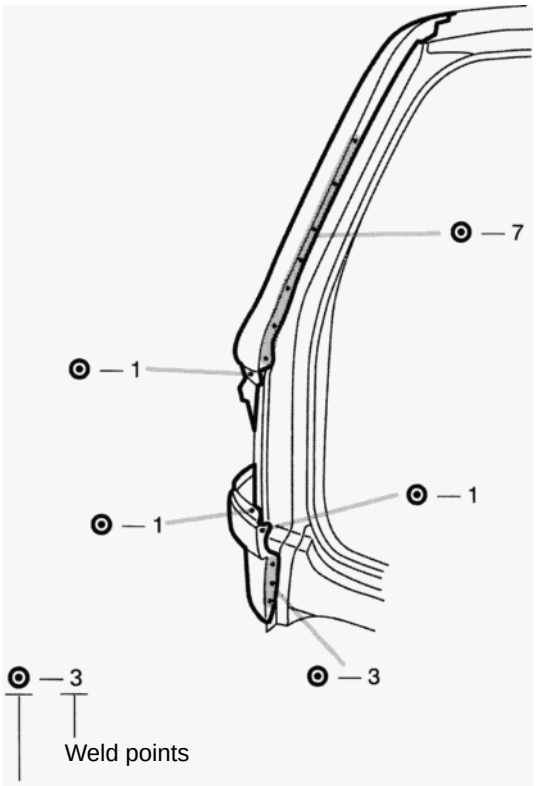

Remove weld point and panel position

INSTALLATION

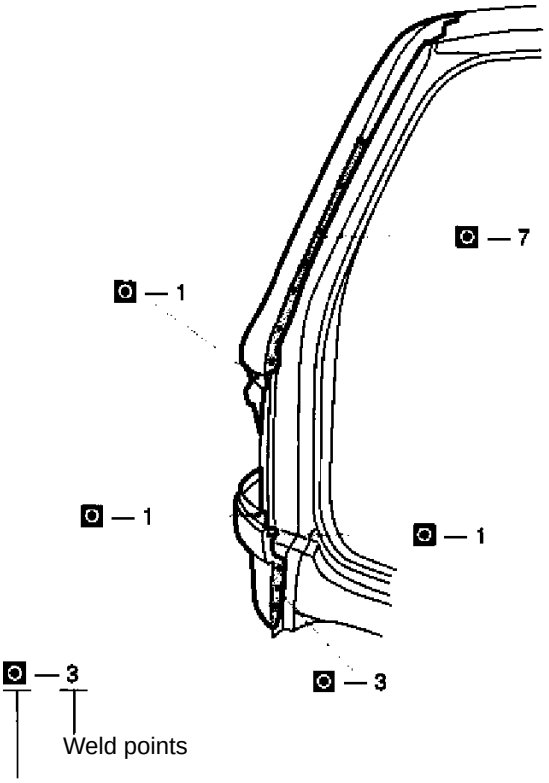

Weld method and panel position

SYMBOL	MEANING	ILLUSTRATION
O M I	Remove Weld Points	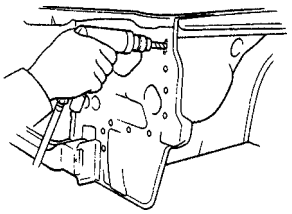
O	(Outside)	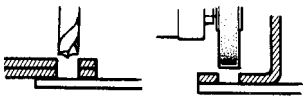
M	(Middle)	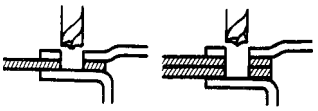
I	(Inside)	

HINT: Panel position syrnbols are as seen from the working posture.

SYMBOL	MEANING	ILLUSTRATION
O M I	Spot Weld	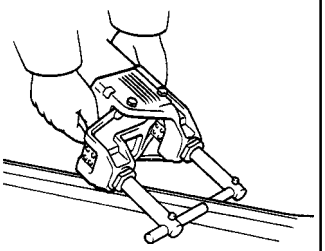
O M I	Mig Plug Weld	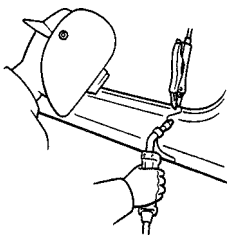
+	Spot MIG Weld	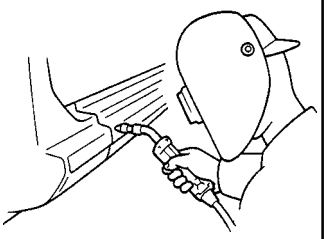

HANDLING PRECAUTIONS ON RELATED COMPONENTS

1. SUPPLEMENTAL RESTRAINT SYSTEM (SRS)

Locations of SRS Components

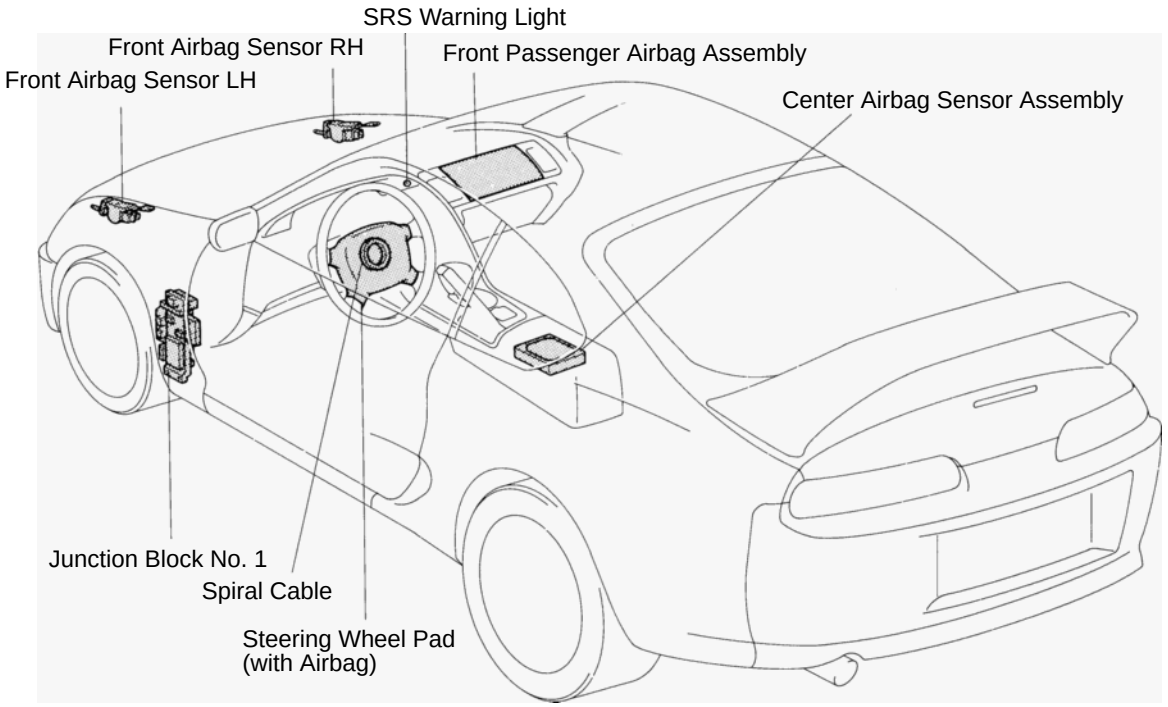

Servicing vehicle with a Supplemental Restraint System (referrerd to as the SRS in the remainder of this manual) installed.
When handling SRS components (removal, installation or inspection, etc.), always follow the directions given in the repair manual for the relevant model year to prevent the occurrence of accidents and airbag malfunction.
Also take the following precautions when repairing the body:

- Work must be started after 90 seconds or longer from the time the ignition switch is set to the LOCK position and the negative (-) terminal cable is disconnected from the battery.
  (The airbag system is equipped with a backup power source so that if work is started within 20 seconds of disconnecting the negative (-) terminal cable of the battery, the airbag may be deployed.)
  When the negative (-) terminal cable is disconnected from the battery, memory of the clock and audio systems will be cancelled. So before starting work, make a record of the contents memorized by each memory system. Then when work is finished, reset the clock and audio systems as before.
  When the vehicle has tilt and telescopic steering, power seat, outside rear view mirror and power shoulder belt anchorage, which are all equipped with memory function, it is not possible to make a record of the memory contents. So when the operation is finished, it will be necessary to explain this fact to the customer, and request the customer to adjust the features and reset the memory.
- When using electric welding, first disconnect the SRS connector (yellow color and 2 pins) under the steering column near the combination switch connector on the glove compartment finish plate and lower the front scuff plate before starting work.

- Before repairing the body, remove the SRS parts if, during repair, shocks are likely to be applied to the sensors due to vibrations of the body or direct tapping with tools or other parts.
- Do not expose the SRS parts directly to hot air or flames.
  NOTICE:
  1) *The maximum ambient temperature tolerance is 120˚C (248˚F) for the front airbag sensor, 105˚C (221˚F) for the center airbag sensor assembly and 93˚C (200˚F) for the steering wheel pad, and front passenger airbag assembly. If it is possible that the ambient temperature may reach or exceed the temperature limit, remove the sensors and the steering wheel pad from the vihicle or protect them with a hot insulation material before starting work.*
  2) *Prior to welding, remove adjacent SRS parts from the vehicle or protect there with fire-proof covers.*
- If the front fender or periphery of the vehicle is damaged, visually inspect for damage to the front airbag sensor using the inspection procedures described in section RS of the repair manual for the relevant model year.
  Also check that the dimensions of the body where the front airbag sensor is installed match those in the body dimension drawings.
  (The airbag may malfunction, or may not work, if the mounting angle or dimensions of the sensor mount are not correct.)

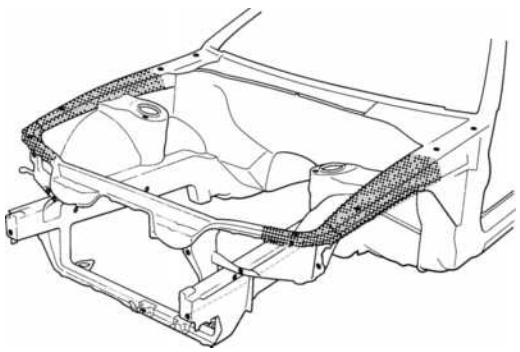

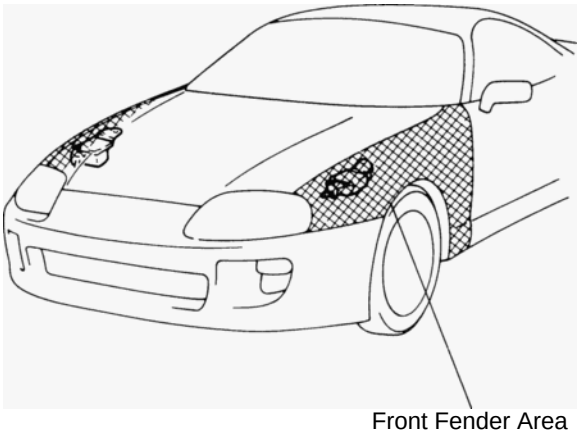

Front Fender Area

- If the vehicle is damaged, visually inspect for damage to the steering wheel pad using the inspection procedures described in section RS of the repair manual for the relevant model year.
- When removing or handling the steering wheel pad, and front passenger airbag assembly keep the pad upper surface facing upward. Also, lock the lock lever of the twin lock type connector at the rear of the pad and take care not to damage the connector.
  (Storing the pad or front passenger airbag assembly with its metalic surface up may lead to a serious accident if the airbag inflates for some reason.)
- Store the steering wheel pad and the front passenger airbag assembly where the ambient temperature remains below 93˚C (200˚F), without high humidity and away from electrical noise.
- Be careful not to let painting materials contact the SRS parts.
- Information labels are attached to the periphery of the SRS components. Follow the NOTICES.
- Store the airbag assembly where the ambient temperature remains below 93˚C (200˚F), without high humidity and away from electrical noise.

2. BRAKE SYSTEM

The brake system is one of the most important safety components. Always follow the directions and notes given in section BR of the repair manual for the relevant model year when handling brake system parts.
NOTICE: When repairing the brake master cylinder or TRAC system, bleed the air out of the TRAC system.

3. DRIVE TRAIN AND CHASSIS

The drive train and chassis are components-that can have great effects on the running performance and vibration resistance of the vehicle. After installing components in the sections listed in the table below, perform alignments to ensure correct mounting angles and dimensions. Particularly accurate repair of the body must also be done to ensure correct alignment.
HINT: Correct procedures and special tools are required for alignment. Always follow the directions given in the repair manual for the relevant model year during alignment and section DI of this manual.

Component to be aligned	Section of repair manual for relevant model year
Front Wheels	Suspension and Axle (SA) section
Rear Wheels	Suspension and Axle (SA) section
Propeller Shaft	Propeller Shaft (PR) section

4. ECU (ELECTRONIC CONTROL UNIT)

Locations of ECUs

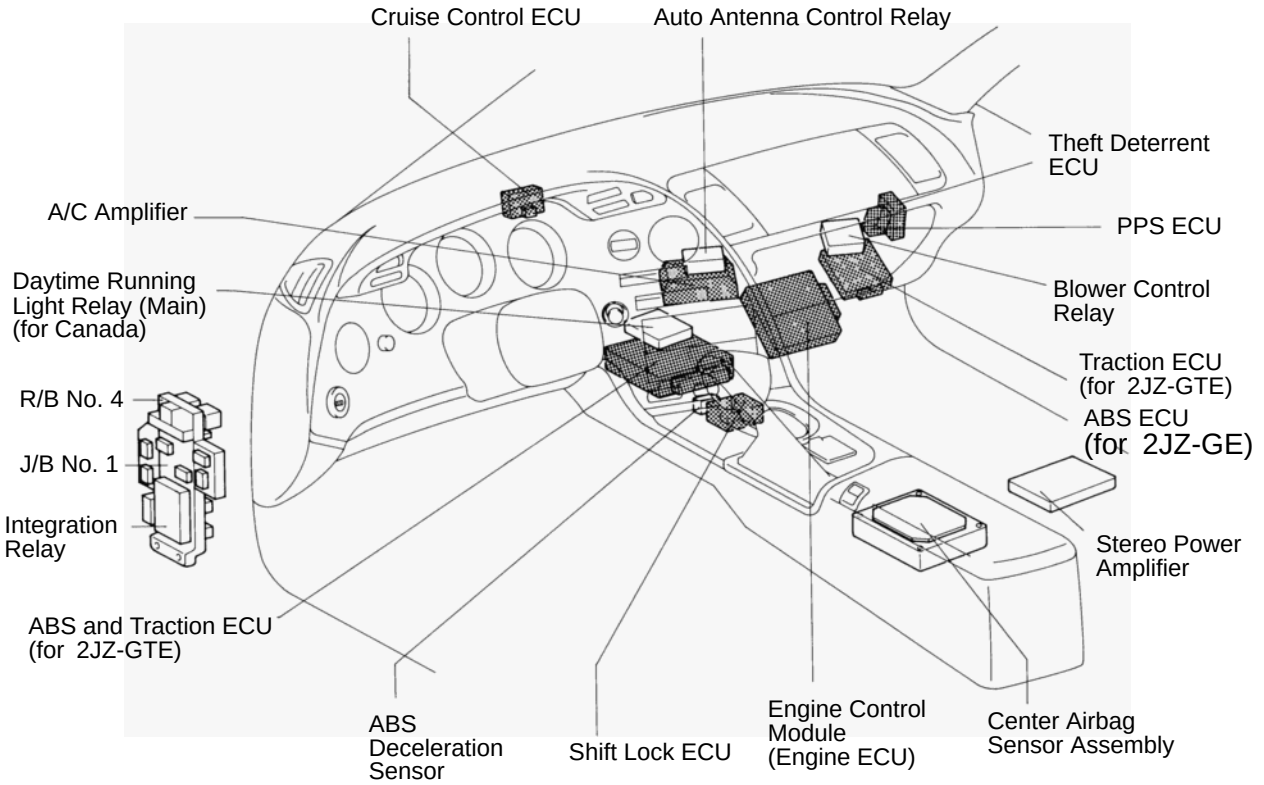

Locations of ECUs (Cont'd)

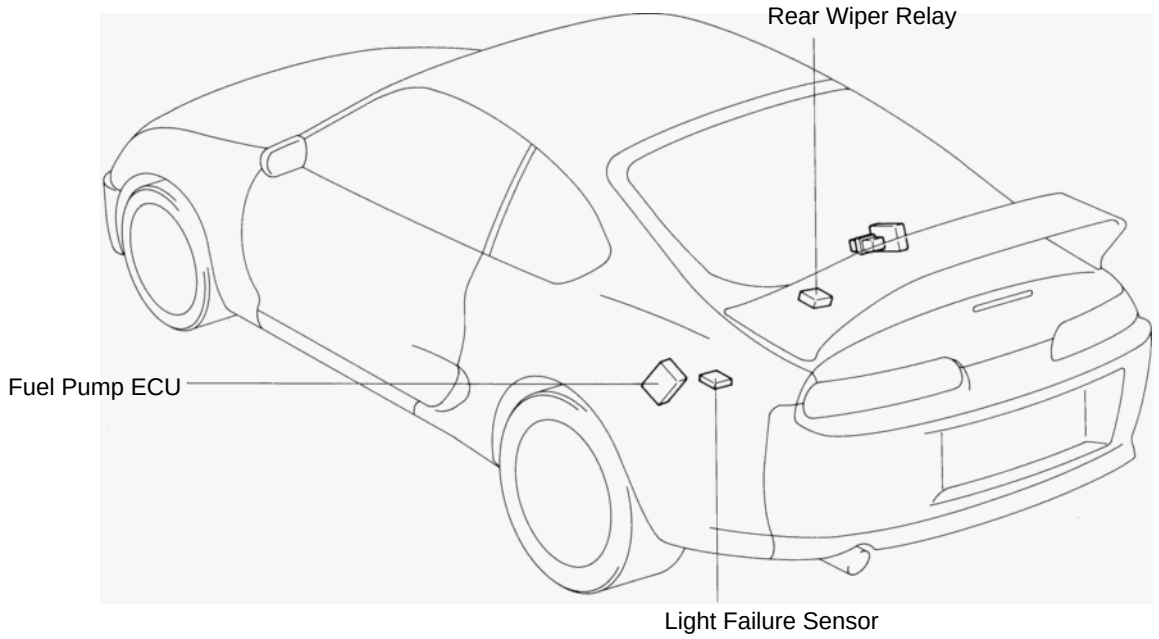

Many ECUs are mounted in this vehicle.
Take the following precautions during body repair to prevent damage to the ECUs.

- Before starting electric welding operations, disconnect the negative (-) terminal cable from the battery. When the negative (-) terminal cable is disconnected from the battery, memory of the clock and audio systems will be cancelled. So before starting work, make a record of the contents memorized by each memory system. Then when work is finished, reset the clock and audio systems as before.
  When the vehicle has tilt and telescopic steering, power seat and outside rear view mirror, which are all equipped with memory function, it is not possible to make a record of the memory contents.
  So when the operation is finished, it will be necessary to explain this fact to the customer, and request the customer to adjust the features and reset the memory.
- Do not expose the ECUs to ambient temperatures above 80˚C (176˚F).
  NOTICE: if it is possible the ambient temperature may reach 80˚C (176˚F) or more, remove the ECUs from the vehicle before starting work.
- Be careful not to drop the ECUs and not to apply physical shocks to them.

5. COMPONENTS ADJACENT TO THE BODY PANELS

Various types of component parts are mounted directly on or adjacently to the body panels.
Strictly observe the following precautions to prevent damaging these components and the body panels during handling.

- Before repairing the body panels, remove their components or apply protective covers over the components.
- Before prying components off using screwdriver or a scraper, etc., attach protective tape to the tool tip or blade to prevent damaging the components an the body paint.
- Before removing components from the outer surface of the body, attach protective tape to the body to ensure no damage to painted areas.
  HINT: Apply touch-up paint to any damaged paint surfaces.
- Before drilling or cutting sections, make sure that there are no wires, etc. on the reverse side.

GENERAL REPAIR INSTRUCTIONS

Work Precautions

SAFETY
Never stand in direct line with the chain when using a puller on the body or frame, and be sure to attach a safety cable.

VEHICLE PROTECTION
When welding, protect the painted surfaces, windows, seats an carpet with heat-resistant, fire-proof covers.

SAFETY

1. Before performing repair work, check for fuel leaks. If a leak is found, be sure to close the opening totally.
2. If it is necessary to use a frame in the area of the-fuel tank, first remove the tank and plug the fuel line.

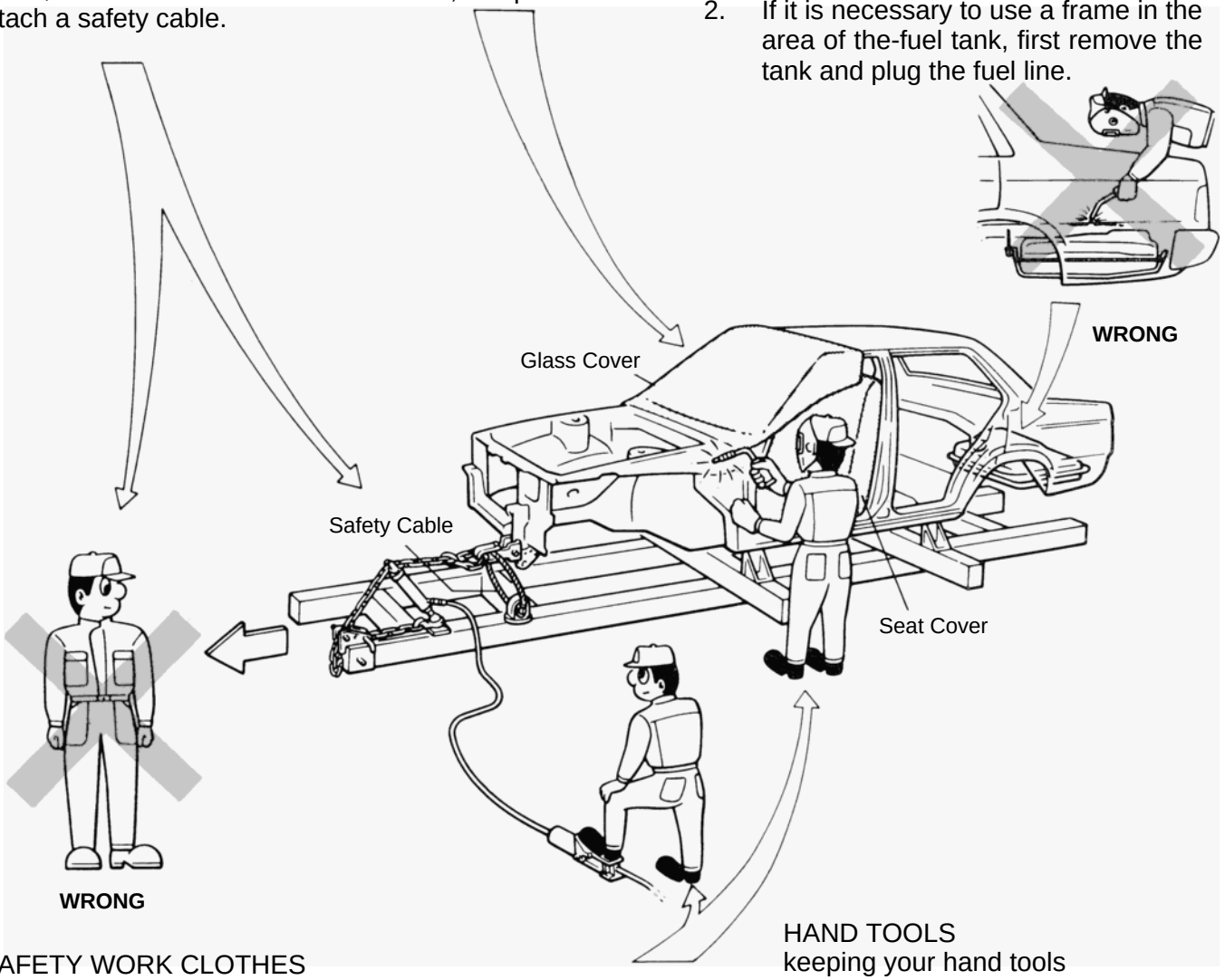

SAFETY WORK CLOTHES
In addition to the usual mechanic's wear, cap and safety shoes, the appropriate gloves, head protector, glasses, ear plugs, face protector, dust-prevention mask, etc. should be worn as the situation demands.

HAND TOOLS
keeping your hand tools in neat order improve your work efficiency.

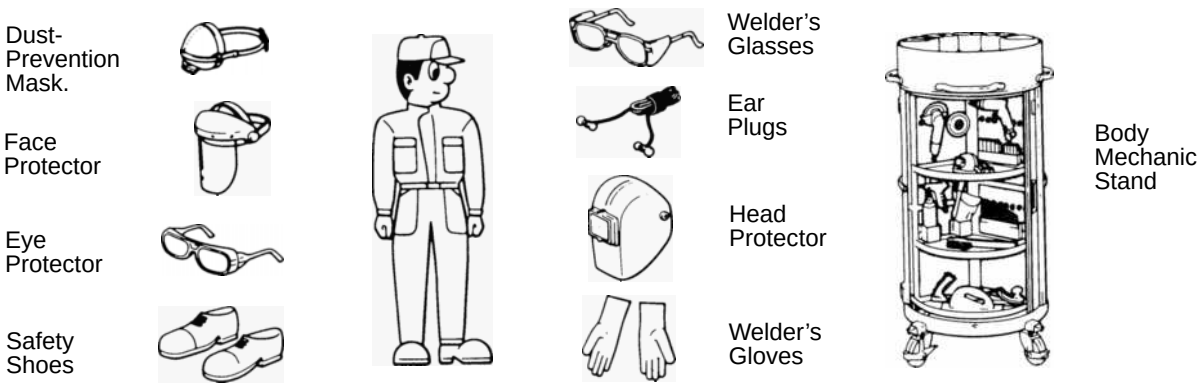

Proper and Efficient Work Procedures

REMOVAL

PRE-REMOVAL MEASURING
Before removal or cutting operations, take measurements in accordance with the dimension diagram. Always use a puller to straighten a damaged body or frame.

NUMBER OF SPOT WELDS AND PANEL POSITIONS
The number of spot welds and the panel positions to be removed are shown for your reference.
HINT: See "Symbols" on page IN-4 , 5.

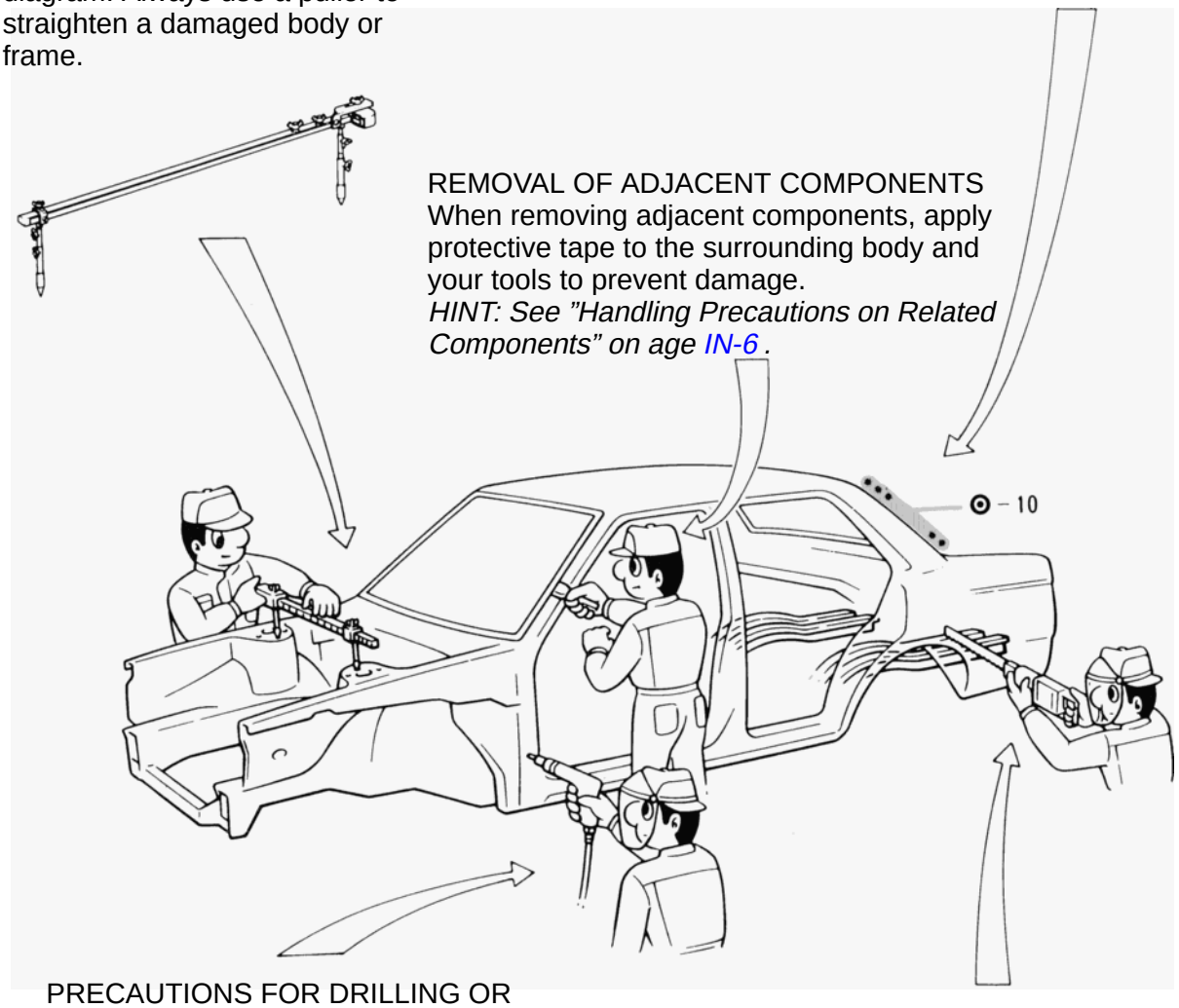

REMOVAL OF ADJACENT COMPONENTS
When removing adjacent components, apply protective tape to the surrounding body and your tools to prevent damage.
HINT: See "Handling Precautions on Related Components" on age IN-6 .

PRECAUTIONS FOR DRILLING OR CUTTING
Check behind any area to be drilled or cut to insure that there are no hoses, wires, etc., that may be damaged.
HINT: See "Handling Precautions on Related Components" on page IN-6 .

CUTTING AREA
Always cut in a straight line and avoid reinforced area.

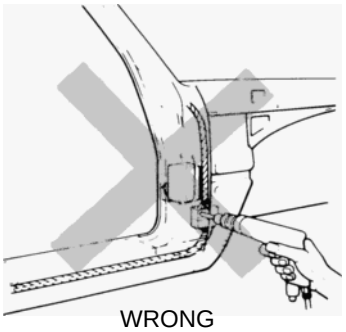

WRONG

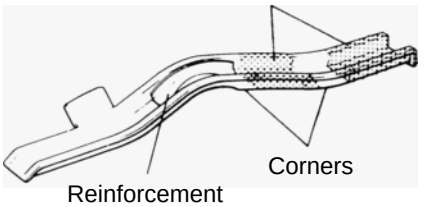

PREPARATION FOR INSTALLATION

SPOT WELD POINTS

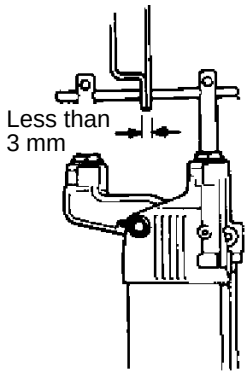

When welding panels with a combined thickness of over 3 mm (0.12 in.), use a MIG (Metal Inert Gas) welder for plug welding.
HINT: spot welding will not provide sufficient durability for panels over 3 mm (0.12 in.) thick.

APPLICATION OF WELD-THROUGH PRIMER (SPOT SEALER)

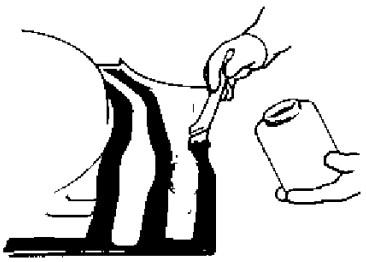

Remove the paint from the portion of the new parts and body to be welded, and apply weld-through primer.
HINT: See "ANTI-RUST TREATMENT" on page AR-2 .

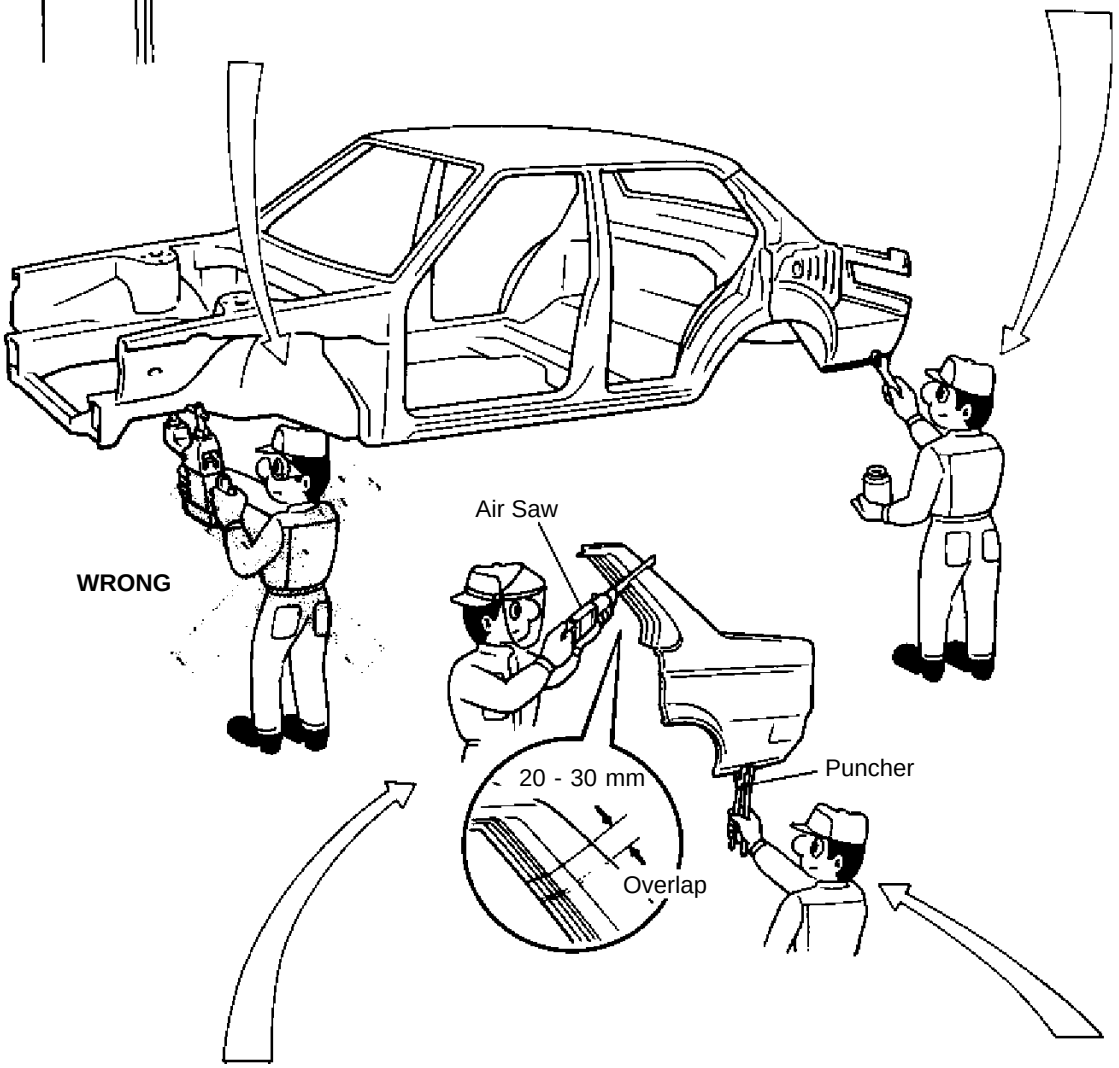

ROUGH CUTTING OF JOINTS
For joint areas, rough cut the new parts, leaving 20 - 30 mm (0.79 - 1.18 in.) overlap.

MAKING HOLES FOR PLUG WELDING
For areas where a spot welder cannot be used, use a puncher or drill to make holes for plug welding.

REFERENCE: mm (in.)

Thickness of welded portion	Size of plug hole
1.0 (0.04) under	5 (0.20) ϕ over
1.0 (0.04) - 1.5 (0.06)	6.5 (0.26) ϕ over
1.5 (0.06) over	8 (0.31) ϕ over

INSTALLATION

PRE-WELDING MEASUREMENTS
Always take measurements before installing underbody or engine components to insure correct assembly. After installation, confirm proper fit.

WELDING PRECAUTIONS

1. The number of welding spots should be as follows. Spot weld: 1.3 x No. of manufacturer's spots. Plug weld: More than No. of manufacturer's plugs.

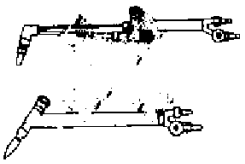

WRONG

2. Plug welding should be done with a MIG (Metal Inert Gas) welder. Do not gas weld or braze panels at areas other than specified.

POST-WELDLNG REFINISHING

1. Always check the welded spots to insure they are secure.
2. When smoothing out the weld spots with a disc grinder, be careful not to grind off too much as this would weaken the weld.

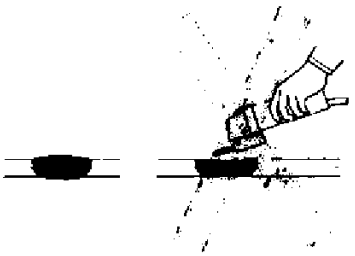

OKAY WRONG

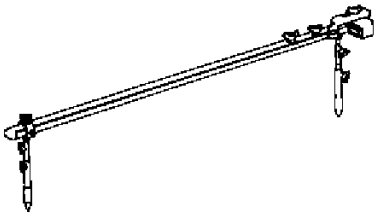

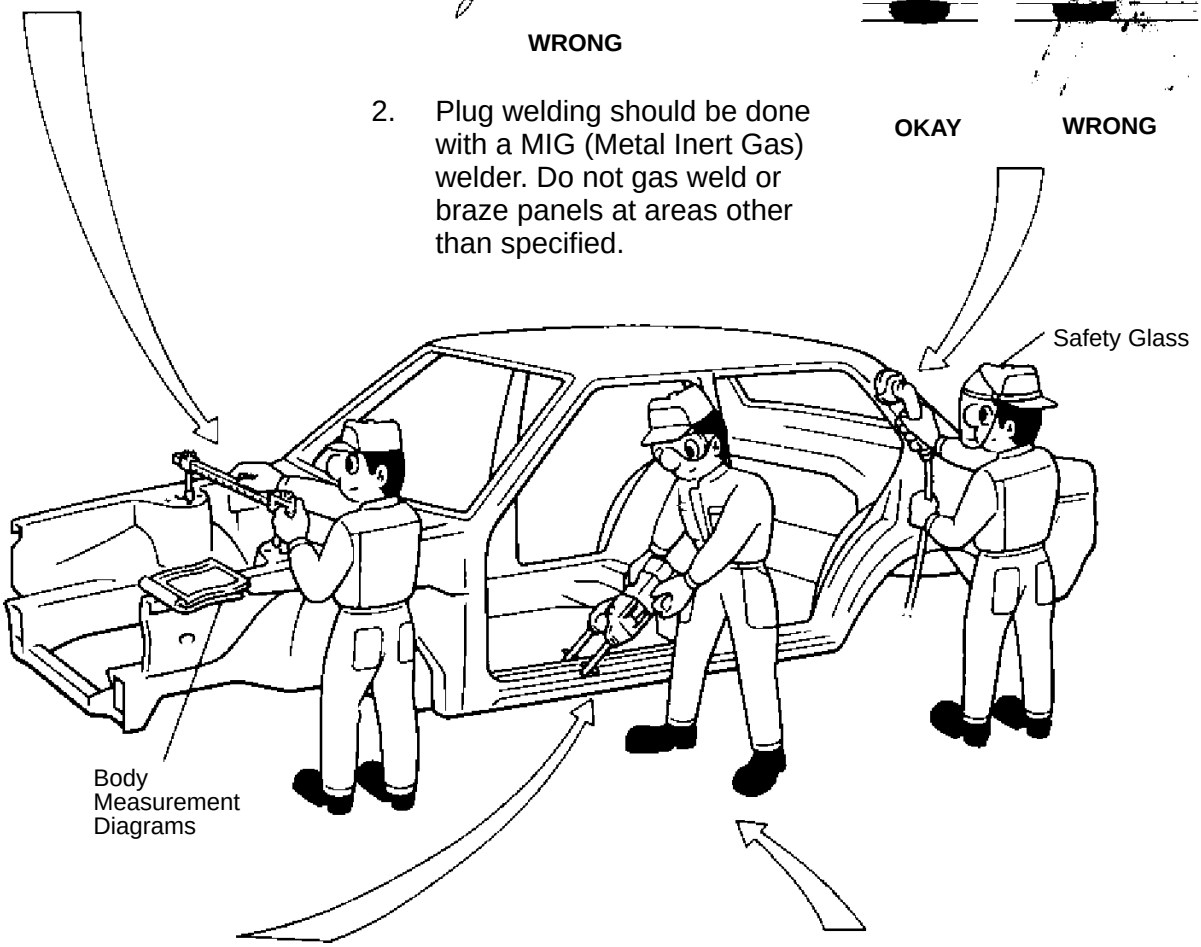

SPOT WELD LOCATIONS
Try to avoid welding over previous spots.

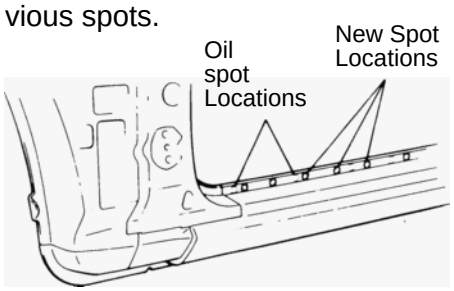

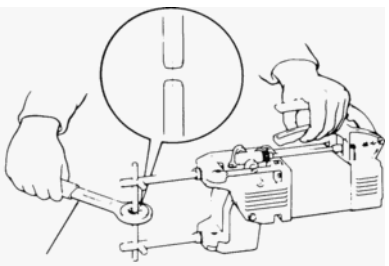

Tip Cutter

SPOT WELDING PRECAUTIONS

1. The shape of the welding tip point has an effect on the strength of the weld.
2. Always insure that the seams and welding tip are free of paint.

ANTI-RUST TREATMENT

When replacing body panels, always apply body sealer, anti-rust agent or undercoat according to the requirements of your country.
HINT: For further details, see the description given in section AR of this manual.

BODY SEALER
Apply body sealer to the required areas.

ANTI-RUST AGENT (WAX)
Apply anti-rust agent to following sections.

- Inside of the hems of the doors and hood.
- Around the hinges of the doors and hood.
- Inside of the welded parts with boxed cross-section.

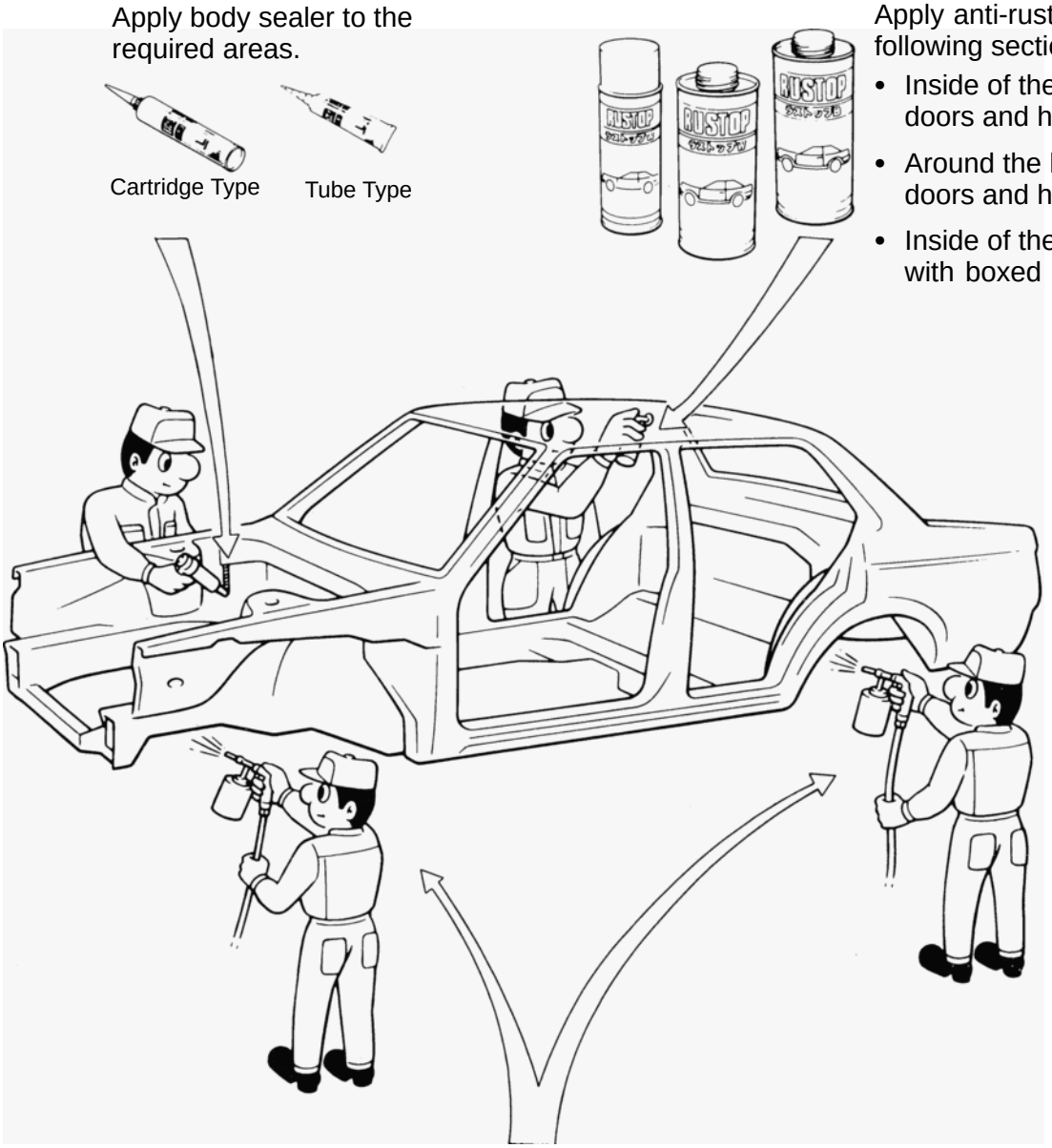

Undercoating (Oil base)

Undercoating (Water base)

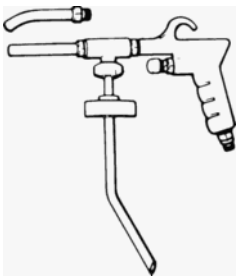

spray Gun

UNDERCOAT
Apply undercoat to the underbody and wheel housings.

VEHICLE LIFT AND SUPPORT LOCATIONS

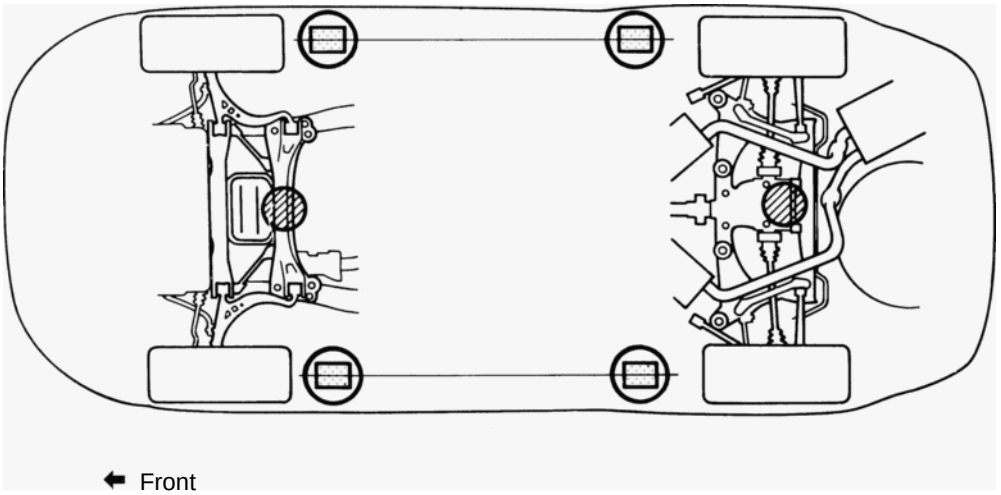

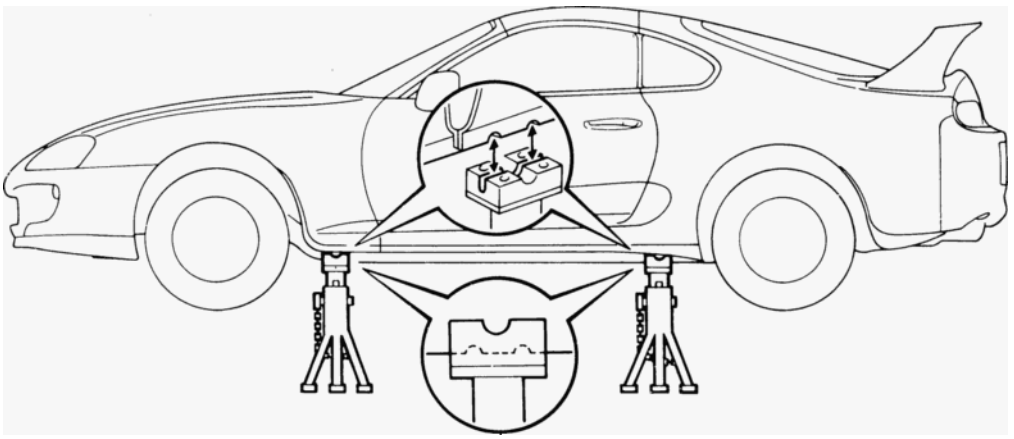

JACK POSITION

Front . . . . . Front crossmember
Rear . . . . . Rear axle beam
CAUTION: Before jacking-up the rear and front, make sure the car is not carrying any extra weight.

PANTOGRAPH JACK POSITION

SUPPORT POSITION

Safety stand and swing arm type lift . . . . . .

ABBREVIATIONS USED IN THIS MANUAL

For convenience, the following abbreviations are used in this manual.

ABS	Antilock Brake System
A/C	Air Conditioner
assy	assembly
ECT	Electronic Controlled Transmission
ECU	Electronic Control Unit
e.g.	Exempli Gratia (for Example)
Ex.	Except
FWD	Front Wheel Drive Vehicles
4WD	Four Wheel Drive Vehicles
in.	inch
LH	Left-hand
LHD	Left-hand Drive
MIG	Metal Inert Gas
M/Y	Model Year
PPS	Progressive Power Steering
RH	Right-hand
RHD	Right-hand Drive
SRS	Supplemental Restraint System
w/	with
w/o	without

COLLISION REPAIR INFORMATION

FOR THE TOYOTA DEALER

TITLE: ANTI–CORROSION TREATMENT

SECTION: GENERAL INFORMATION BULLETIN #82

MODELS: ALL

DATE: DECEMBER 1997

To prevent corrosion and reduce interior noise when replacing body panels, always apply corrosion inhibiting and sound dampening materials such as body sealer, cavity wax, undercoating and body foam according to Toyota recommendations.

These recommendations can be found in the Anti–Rust Treatment (AR) section of the model specific Repair Manual for Collision Damage publication. Collision repair manuals can be obtained through a Toyota dealership parts department.

BODY SEALER

For waterproofing and corrosion protection measures, always apply body sealer to the seams and hems of the doors, hoods, etc.

Apply body sealer to required areas:

Door seams (Illustration A.)

Underhood seams (Illustration B.)

Wherever body sealer has been removed during a repair

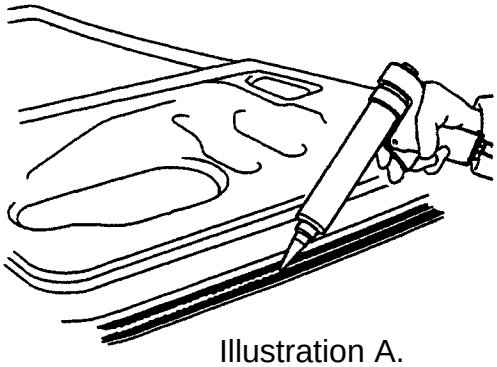

Illustration A.

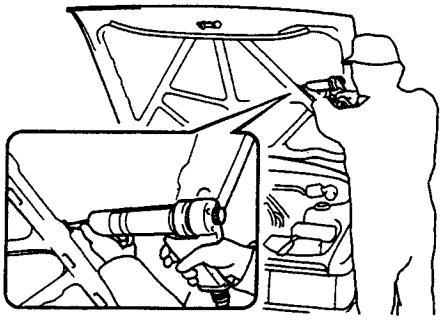

Illustration B.

CAVITY WAX

To provide corrosion resistance, always apply cavity wax to the inside of the hemming areas of the doors and hoods, around the hinges, and to the welded surfaces inside the boxed cross–section structure of the side member, body pillar, etc.

Apply cavity wax to required areas:

Inside of the hems of the doors and hoods (Illustration A.)

Around the hinges of the doors and hood (Illustration B.)

Wherever the original cavity wax was disturbed during a repair

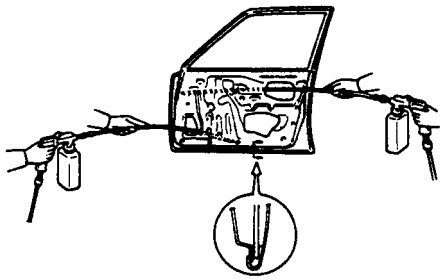

Illustration A.

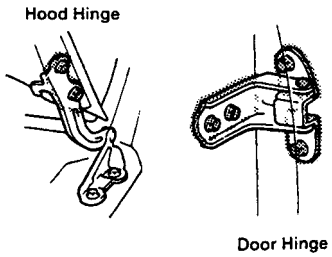

Illustration B.

UNDERCOATING

To protect the body from damage by flying stones, always apply chip resistant materials to the bottom surfaces of the underbody and inside of the wheel housing.

Apply chip resistant materials to all welded areas and panel joints (Illustration A.); then apply to the entire area (Illustration B.).

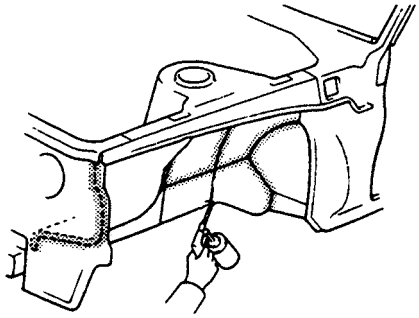

Illustration A.

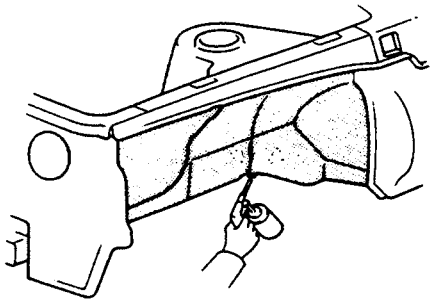

Illustration B.

BODY FOAM

Apply body foam to all areas where foam was damaged or removed during a repair. This will restore sound deadening characteristics and corrosion protection.

Apply body foam to all required areas:

"A", "B" and "C" pillar

Rocker panels

Wherever foam was disturbed or removed during a repair

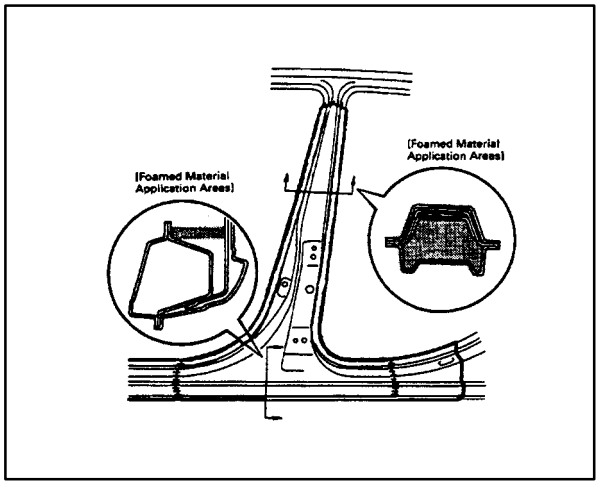

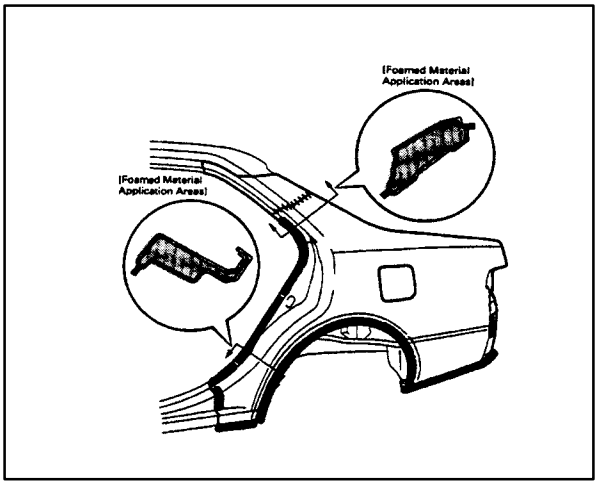

The information on the application of all anti–corrosion materials is contained in the Anti–Corrosion Treatment section (AR), and throughout the Body Panel Replacement section of the Toyota Repair Manual for Collision Damage Publications. Information on anti–corrosion material application can also be found in the Fundamental Body Repair Procedures manual and the Noise, Vibration, and Harshness manual.

These publications may be obtained through your local Toyota dealership parts department or by obtaining the part number and calling:

1–800–622–2033 Mon–Fri 7:00 a.m. to 4:30 p.m. Pacific Standard Time

This information can also be obtained by attending Toyota Collision Repair and Refinish training courses:

- Non–Structural Body Repair Techniques
- Structural Body Repair Techniques

MANUFACTURERS LIST

Provided is a list of manufacturers. Call them directly to obtain a list of their products or a product demonstration brochure.

	Phone	Web site
3M:	1–800–877–9344	N/A
Kent:	1–800–654–6333	http://www.farnell.co.uk
Dominion:	1–800–265–0790	http://www.dominionsureseal.com
SEM:	1–800–831–1122	N/A
Crest:	1–800–822–1400	http://www.crestauto.com
Wurth:		
Western area	1–800–346–4198	http://www.wurthwest.com
Illinois	1–800–99–WURTH	http://www.wurthillinois.com
Florida	1–800–829–8316	http://www.wurthflorida.com
All other states	1–800–526–5228	http://www.wurthusa.com

BODY DIMENSION DRAWINGS

ENGINE COMPARTMENT

(Three-Dimensional Distance)

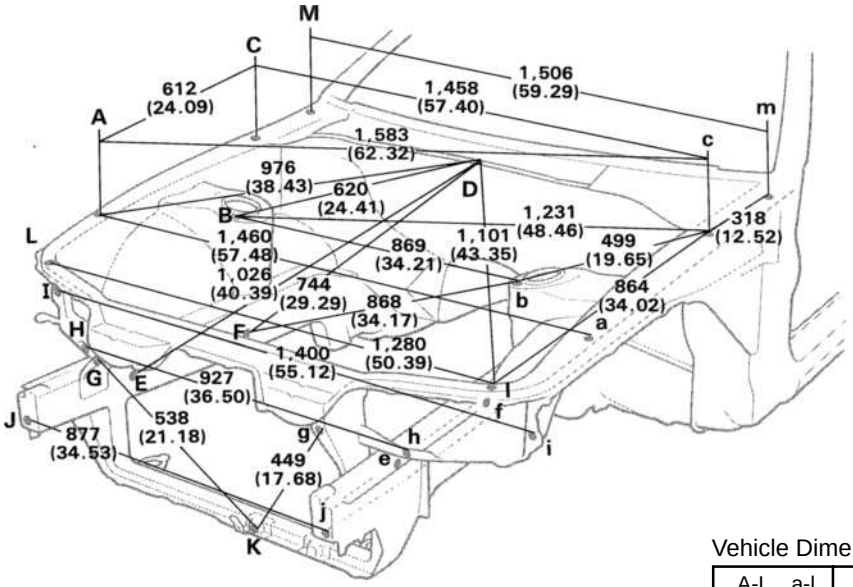

Vehicle Dimensions

A-L, a-l	C-l, c-L	G-g
263 (10.35)	1,617 (63.66)	652 (25.67)

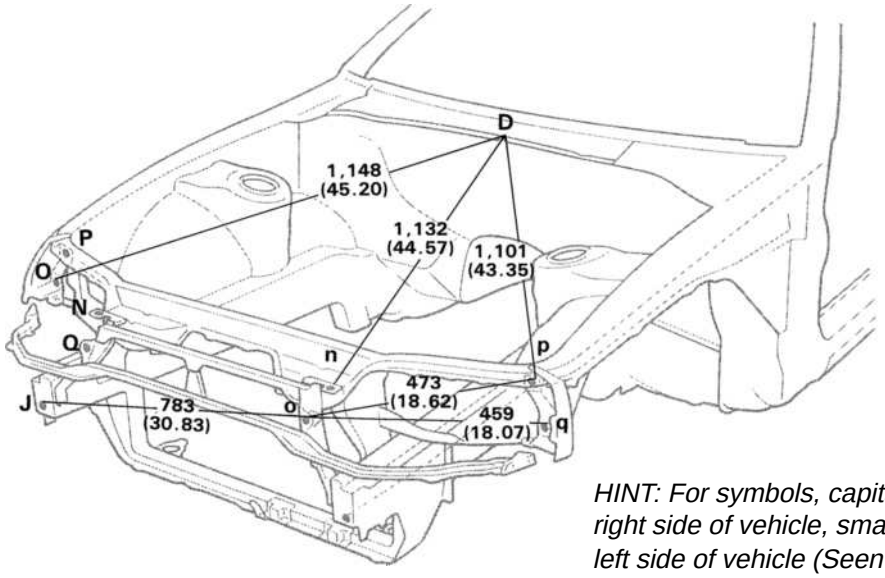

HINT: For symbols, capital letters indicate right side of vehicle, small letters indicate left side of vehicle (Seen from rear).

NO8903
NO8971

mm (in.)

Symbol	Name	Hole dia.	Symbol	Name	Hole dia.
A, a	Front fender apron standard hole	10 (0.39)	J, j	Front side member reinforcement standard hole	8 (0.31)
B, b	Front spring support hole-front	11 (0.43)	K	Cooling fan installation nut	6 (0.24) nut
C, c	Cowl top side panel standard hole	10 (0.39)	L, l	Front fender installation nut	6 (0.24) nut
D	Cowl top panel center mark	—	M, m	Hood hinge installation nut	8 (0.31) nut
E, e	Front side member working hole	18 (0.71)	N, n	Headlight installation nut	6 (0.24) nut
F, f	Front side member standard hole	13 (0.51)	O, o	Headlight installation hole	14x10.6 (0.55x0.42)
G, g	Radiator duct installation hole	7.2 (0.283)	P, p	Headlight installation hole	14x9 (0.55x0.35)
H, h	Radiator support apron brace standard hole	10 (0.39)	Q, q	Headlight installation hole	14x9 (0.55x0.35)
I, i	Apron fender side extension standard hole	9 (0.35)	—	—	—

BODY LOWER BACK PANEL (ASSY)

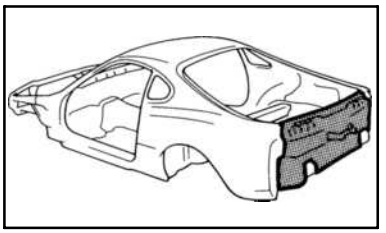

REMOVAL

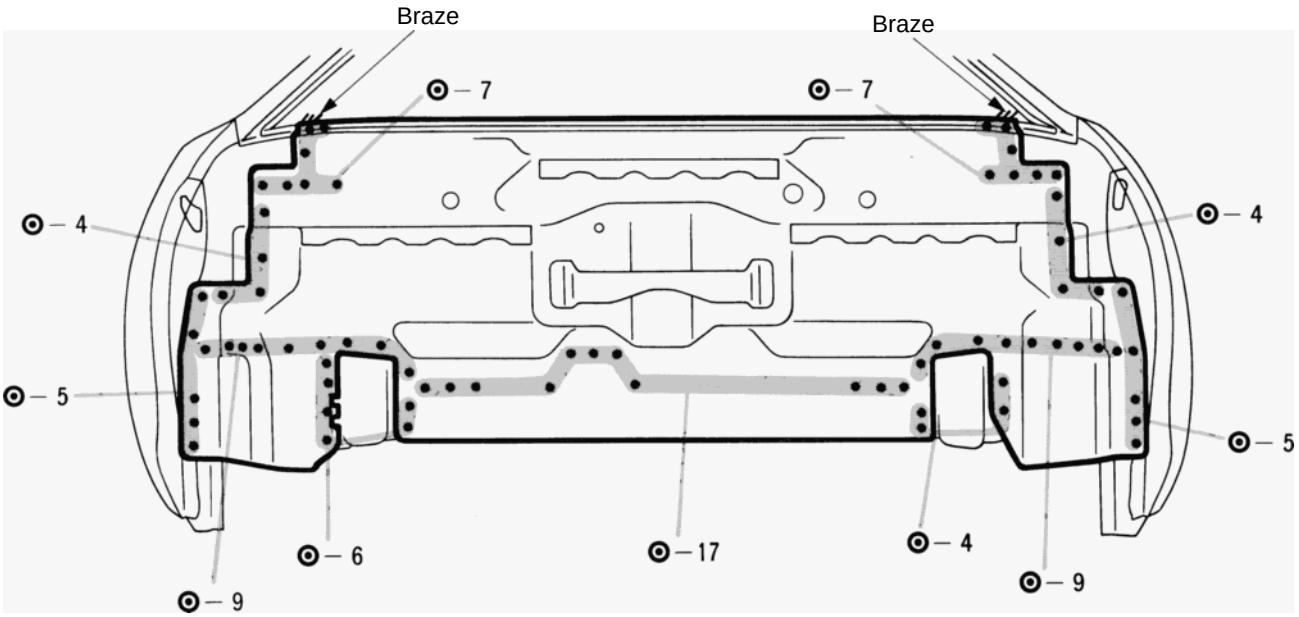

INSTALLATION

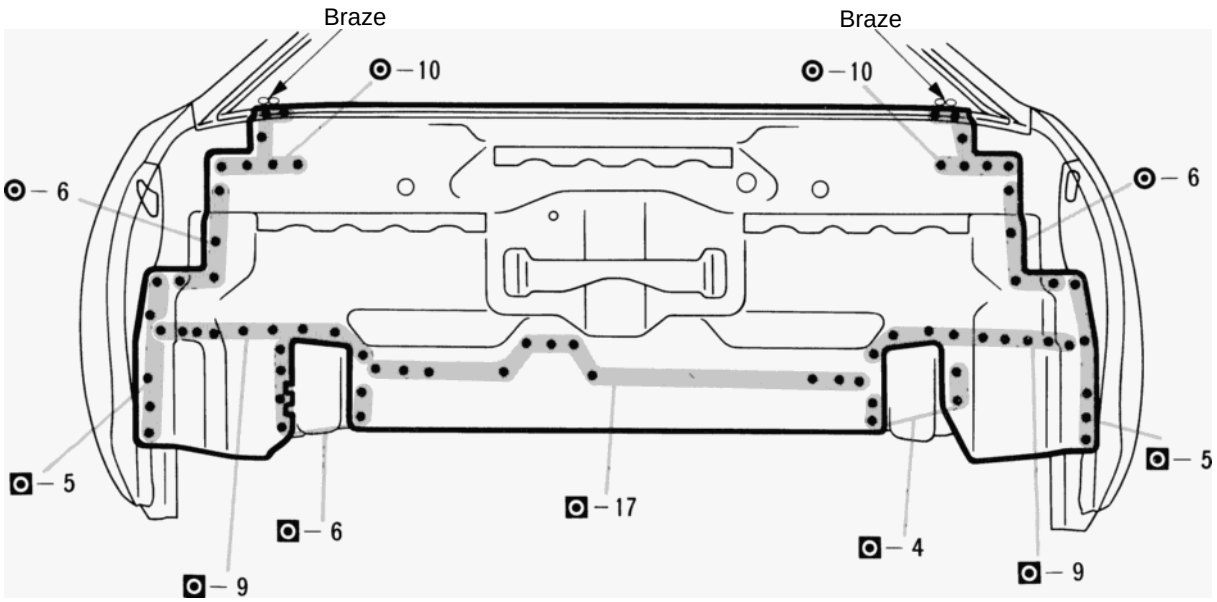

1. Temporarily installing the new parts, check the fit of the back door and rear combination lamp.

BODY OPENING AREAS (Side View: Sport Roof)

(Three-Dimensional Distance)

NO8905

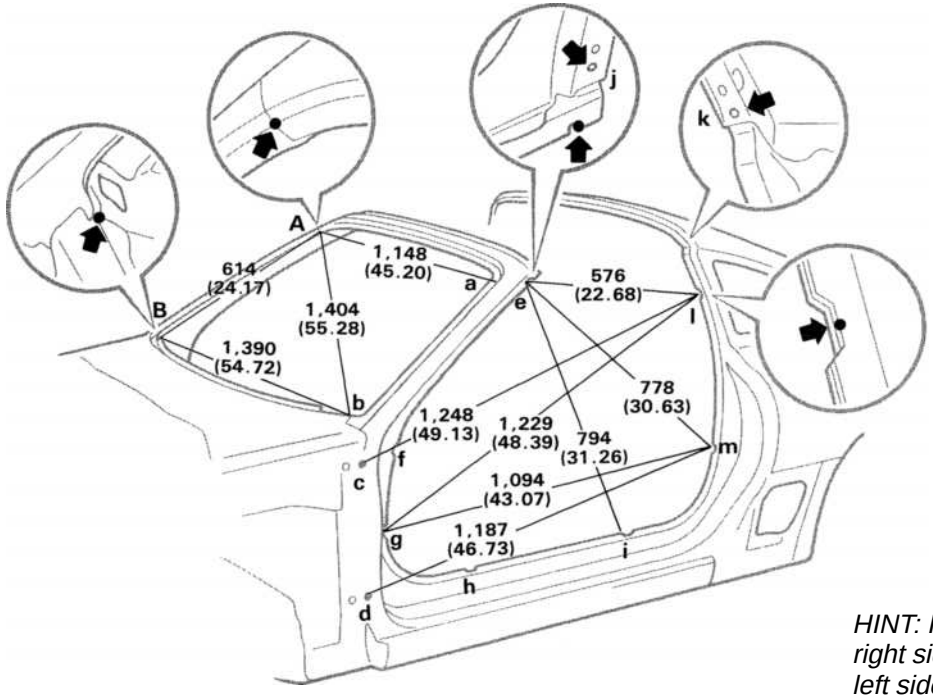

HINT: For symbols, capital letters indicate right side of vehicle, small letters indicate left side of vehicle (Seen from rear).

Vehicle Dimensions Left↔ Right

E-e	F-f	G-g	H-h	I-i
1,148 (45.20)	1,488 (58.58)	1,506 (59.29)	1,510 (59.45)	1,510 (59.45)

J-j	K-k	L-1	M-m
1,095 (43.11)	1,081 (42.56)	1,260 (49.61)	1,530 (60.24)

E-g or e-G	E-h or e-H	E-i or e-I	E-l or e-L	G-l or g-L
1,545 (60.83)	1,548 (60.94)	1,538 (60.56)	1,333 (52.48)	1,846 (72.68)

J-k or j-K
568 (22.36)

G-m or g-M	H-i or h-I	I-l or i-L	J-k or j-K	L-m or l-M
1,871 (73.66)	1,602 (63.07)	1,566 (61.65)	1,227 (48.31)	1,.465 (57.68)

mm(in.)

Symbol	Name	Hole dia.	Symbol	Name	Hole dia.
A, a	Roof panel/ Front body pillar adjoining portion	—	H, h	Rocker panel reinforcement adjoining portion mark	—
B, b	Cowl top panel/ Front body pillar adjoining portion	—	I, i	Rocker panel reinforcement adjoining portion mark	—
C, c	Front door hinge installation nut	10 (0.39)nut	J, j	Weatherstrip installation hole	7.3 (0.29)
D, d	Front door hinge installation nut	10 (0.39)nut	K, k	Weatherstrip installation hole	7.3 (0.29)
E, e	Front body pillar adjoining portion mark	—	L, l	Quater panel adjoining portion mark	—
F, f	Front body pillar adjoining portion mark	—	M, m	Quater panel adjoining portion mark	—
G, g	Front body pillar adjoining portion mark	—	—	—	—

BODY OPENING AREAS (Rear View: Normal Roof)

(Three-Dimensional Distance)

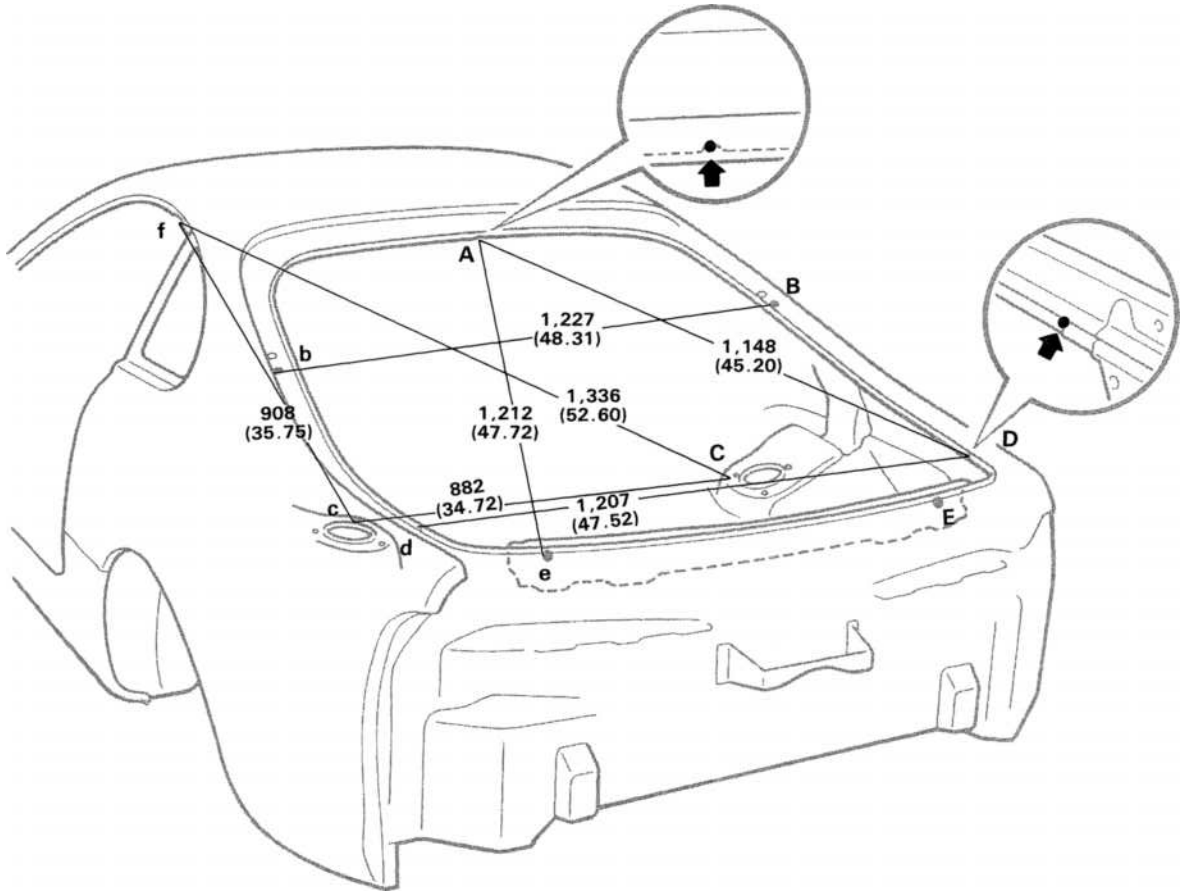

NOB906

HINT: For symbols, capital letters indicate right side of vehicle, small letters indicate left side of vehicle (Seen from rear).

mm (in.)

Symbol	Name	Hole dia.	Symbol	Name	Hole dia.
A	Back door opening frame center mark	—	D, d	Back door opening trough / Quater panel adjoining portion	—
B, b	Damper stay installation hole-rear	8 (0.31)	E, e	Lower back panel reinforcement standard hole	10 (0.39)
C, c	Rear spring support hole-inner, front	9 (0.35)	F, f	Roof side rail adjoining portion mark	—

BODY OPENING AREAS (Rear View: Sport Roof)

(Three-Dimensional Distance)

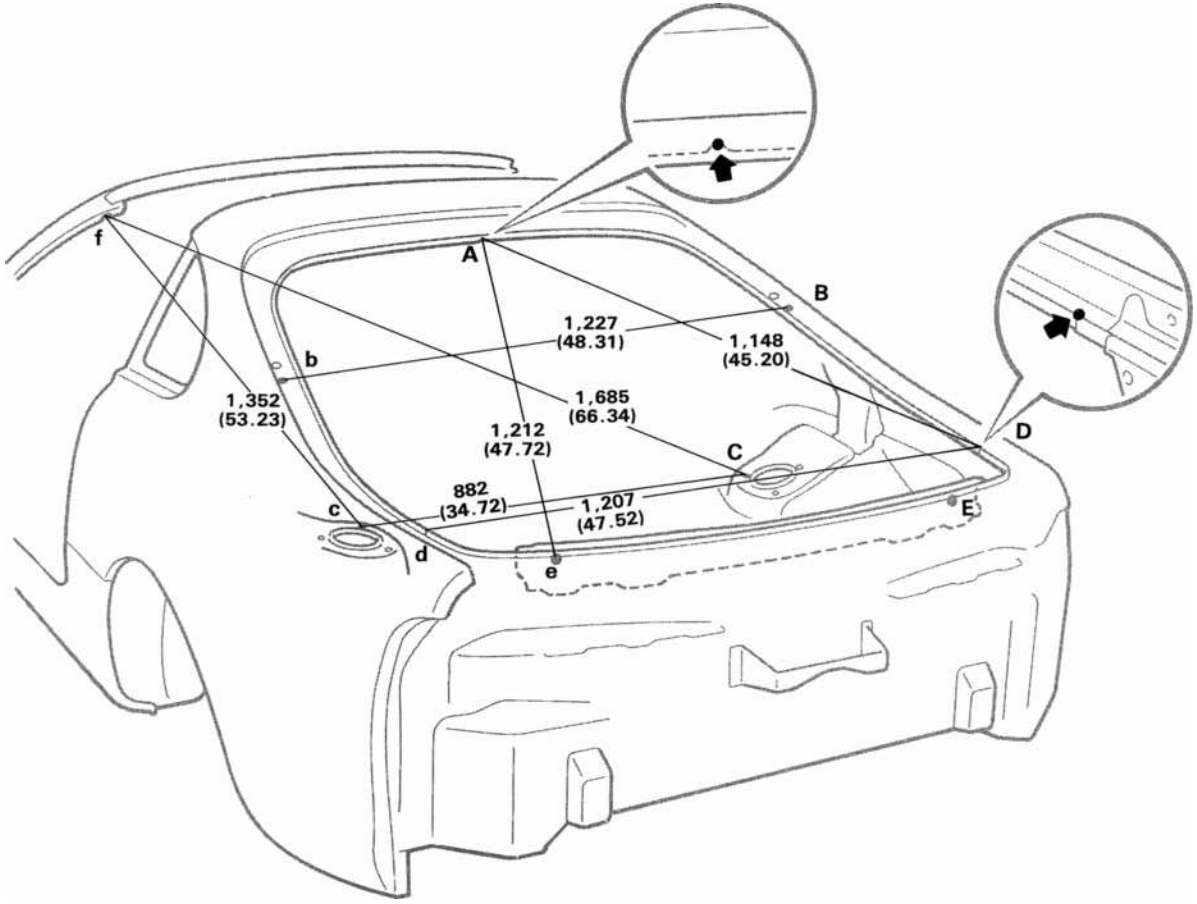

HINT: For symbols, capital letters indicate right side of vehicle, small letters indicate left side of vehicle (Seen from rear).

mm (in.)

Symbol	Name	Hole dia.	Symbol	Name	Hole dia.
A	Back door opening frame center mark	—	D, d	Back door opening trough / Quarter panel adjoining portion	—
B, b	Damper stay installation hole-rear	8 (0.31)	E, e	Lower back panel reinforcement standard hole	10 (0.39)
C, c	Rear spring support hole-inner, front	9 (0.35)	F, f	Front body pillar adjoining portion mark	—

BODY OPENING AREAS (Side View: Normal Roof)

(Three-Dimensional Distance)

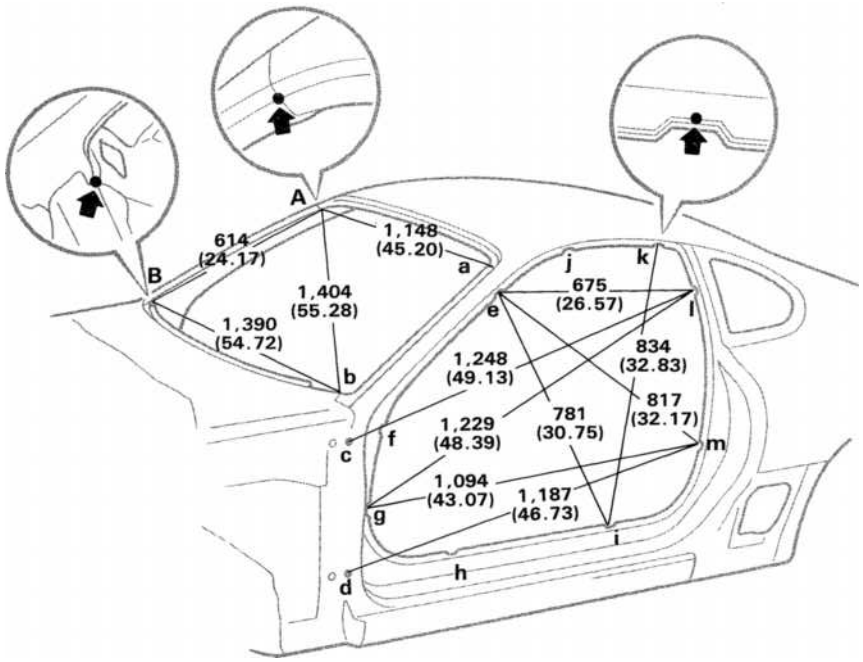

HINT: For symbols, capital letters indicate right side of vehicle, small letters indicate left side of vehicle (Seen from rear).

Vehicle Dimensions Left↔ Right

E-e	F-f	G-g	H-h	I-i
1,234 (48.58)	1,488 (58.58)	1,506 (59.29)	1,510 (59.45)	1,510 (59.45)

J-j	K-k	L-l	M-m
1,094 (43.07)	1,090 (42.91)	1,260 (49.61)	1,530 (60.24)

E-g or e-G	E-h or e-H	E-i or e-I	E-l or e-L	G-l or g-L
1,531 (60.28)	1,546 (60.87)	1,573 (61.93)	1,418 (55.83)	1,846 (72.68)

G-m or g-M	H-i or h-I	I-k or i-K	I-l or i-L	L-m or l-M
1,871 (73.66)	1,602 (63.07)	1,530 (60.24)	1,566 (61.65)	1,465 (57.68)

mm (in.)

Symbol	Name	Hole dia.	Symbol	Name	Hole dia.
A, a	Roof panel/ Front body pillar adjoining portion	—	H, h	Rocker panel reinforcement adjoining portion mark	—
B, b	Cowl top panel/ Front body pillar adjoining portion	—	I, i	Rocker panel reinforcement adjoining portion mark	—
C, c	Front door hinge installation nut	10 (0.39)nut	J, j	Roof side rail adjoining portion mark	—
D, d	Front door hinge installation nut	10 (0.39)nut	K, k	Roof side rail adjoining portion mark	—
E, e	Front body pillar adjoining portion mark	—	L, l	Quarter panel adjoining portion mark	—
F, f	Front body pillar adjoining portion mark	—	M, m	Quarter panel adjoining portion mark	—
G, g	Front body pillar adjoining portion mark	—	—	—	—

NO8904

BODY PANEL UNDERCOATING AREAS

HINT:

1. *First wipe off any dirt, grease or oil with a rag soaked in a grease, wax and silicone remover.*
2. *Cover the surrounding areas with masking paper to avoid coating unnecessary areas. If other areas are accidently coated, wipe off the coating immediately.*
3. *Apply the first coating of undercoat to all welded areas and panel joints, then apply a second coat over the entire area.*
4. *Do not coat parts which become hot, such as the tailpipe, or moving parts, such as the propeller shaft.*
5. *Besides the locations described below, apply undercoating to all weld points under the body to insure corrosion prevention.*
6. *Be sure to seal the edge of the flange of the member and bracket with undercoating.*
7. *If undercoat is damaged by peeling, cracks etc., be sure to repair as necessary.*

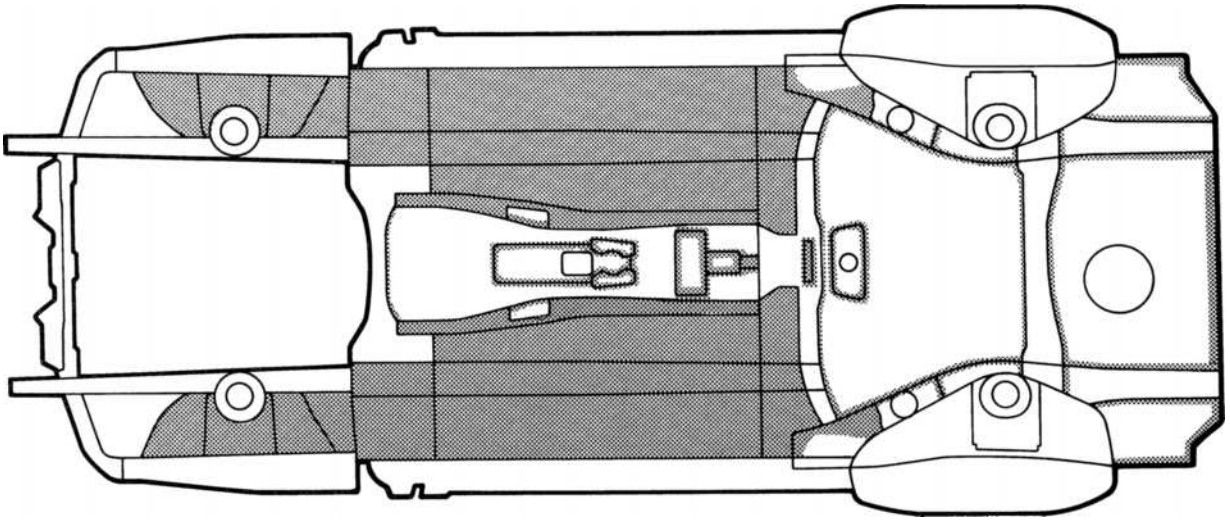

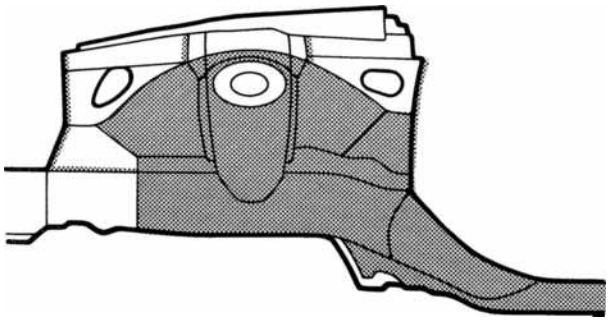

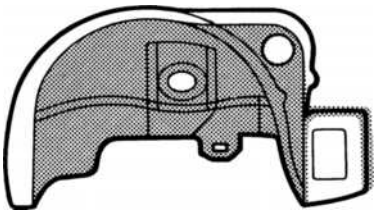

REFERENCE: Referring to the notes above, undercoating should be applied according to the specifications for your country.

BODY PANEL ANTI-RUST AGENT (WAX) APPLICATION AREAS

HINT:

1. *Whenever adjusting the doors and hoods, apply anti-rust agent (wax) around the hinges.*
2. *Even if partially repairing a part, apply anti-rust agent (wax) over the entire application area of the part.*
3. *Wipe off the anti-rust agent immediately with a rag soaked in a grease, wax and silicone remover, if accidently applied to other areas.*

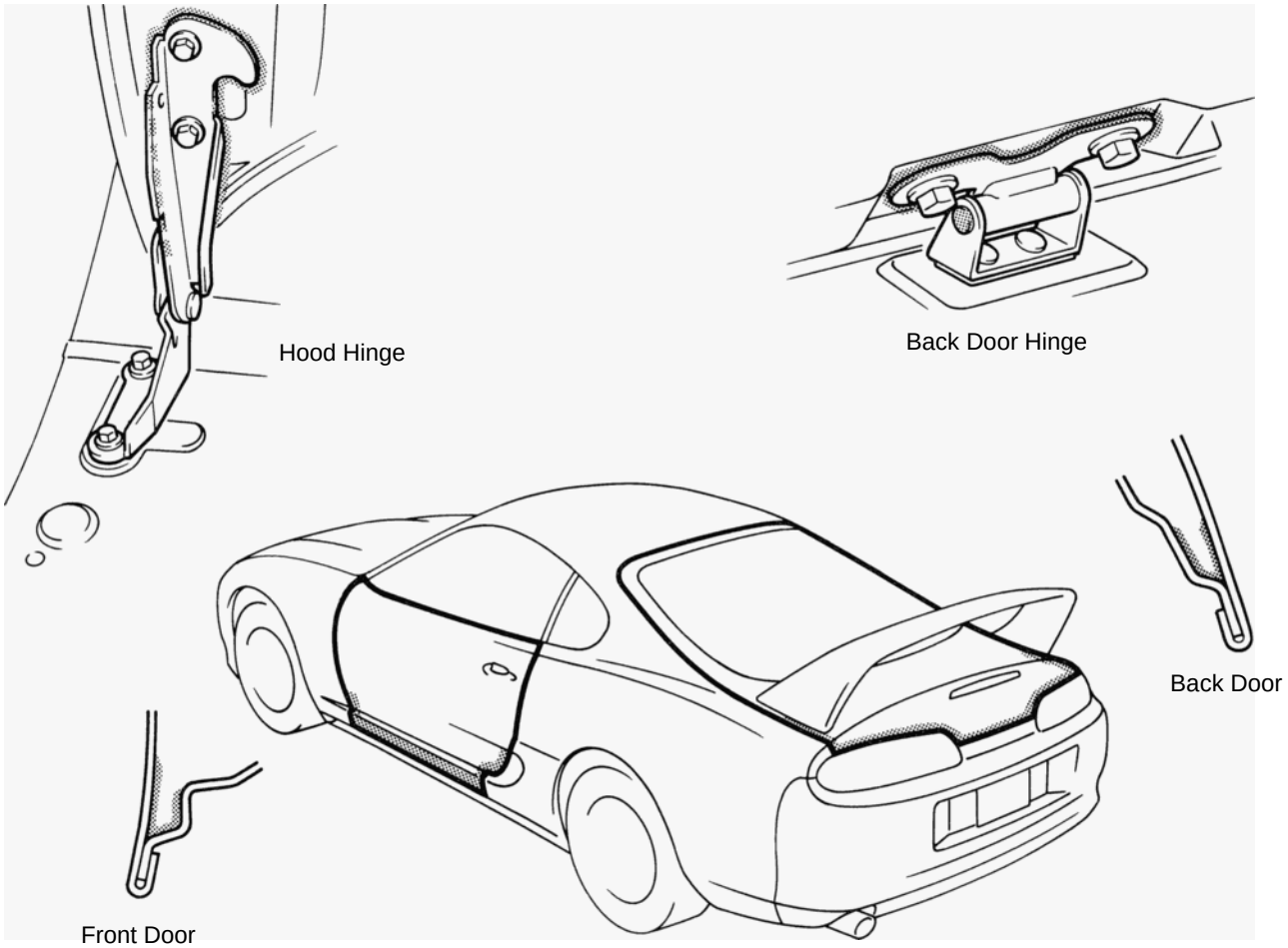

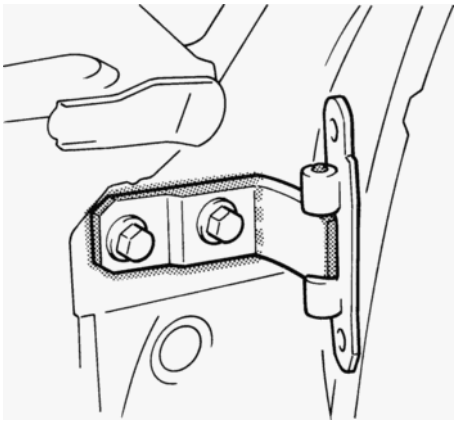

Door Hinge

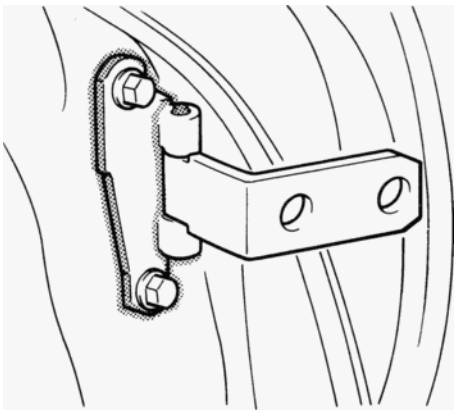

BODY PANEL ANTI-CHIPPING PAINT APPLICATION AREAS

HINT:

1. *Anti-chipping paint should be applied to some areas before the second coat and to others after the top coat.*
2. *If other areas are accidentally coated, wipe of the paint immediately with a rag soaked in a grease, wax and silicone remover.*

: Soft-Chip Primer (body front)

: PVC Chipping Primer (outside rocker panel)

: Chipping Protector (plastic)

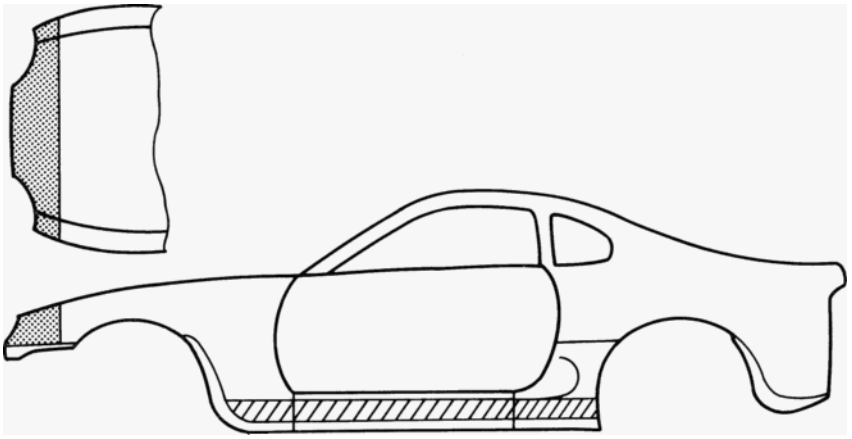

BODY PANEL SEALING AREAS

HINT:

1. *Prior to applying body sealer, clean the area with a rag soaked in a grease, wax and silicone remover.*
2. *If weld through primer was used, first wipe off any excess and coat with anti-corrosion primer before applying body sealer.*
3. *Wipe off excess body sealer with a rag soaked in a grease, wax and silicone remover.*
4. *If body sealer is damaged by peeling, cracks, etc., be sure to repair as necessary.*

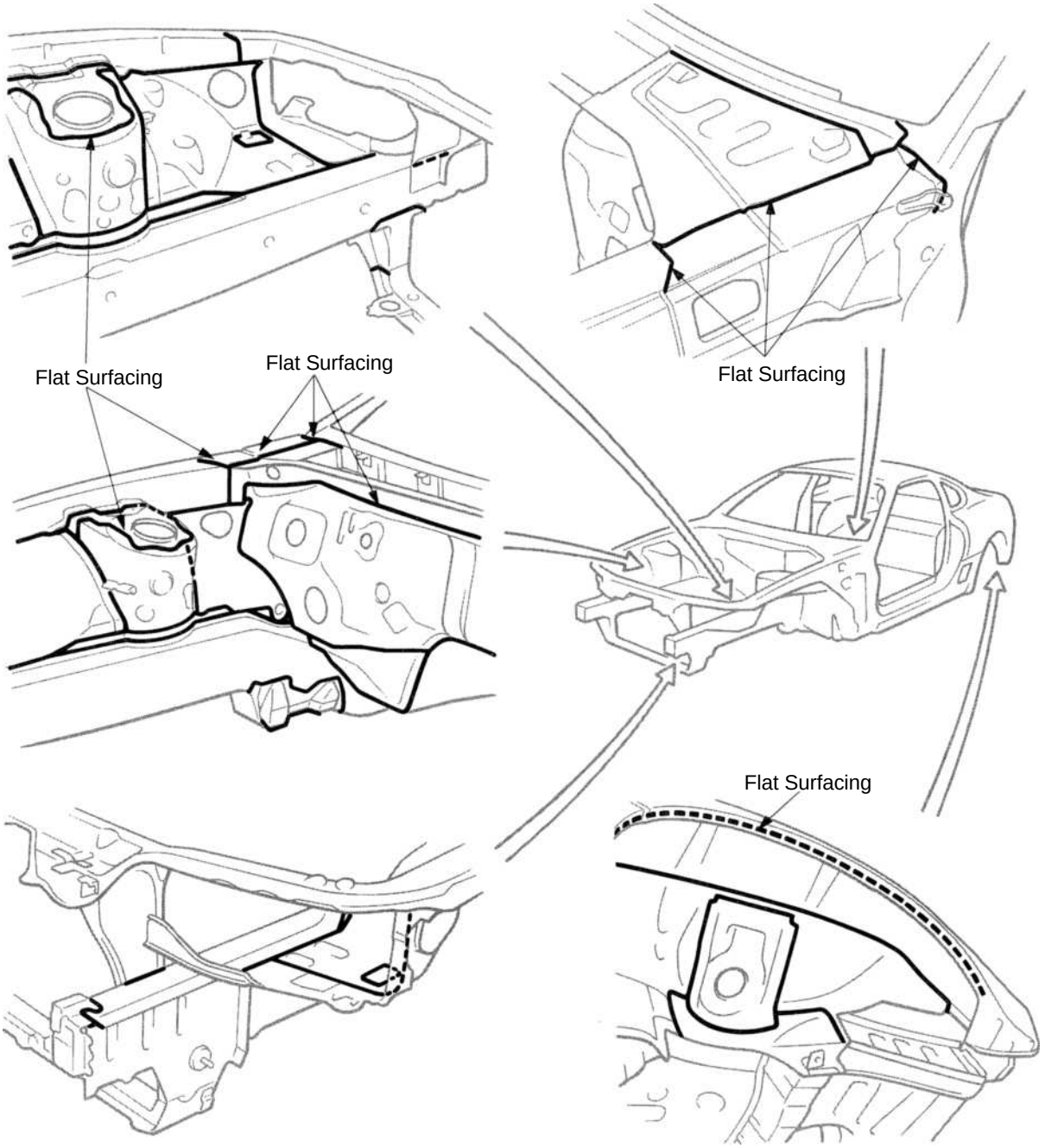

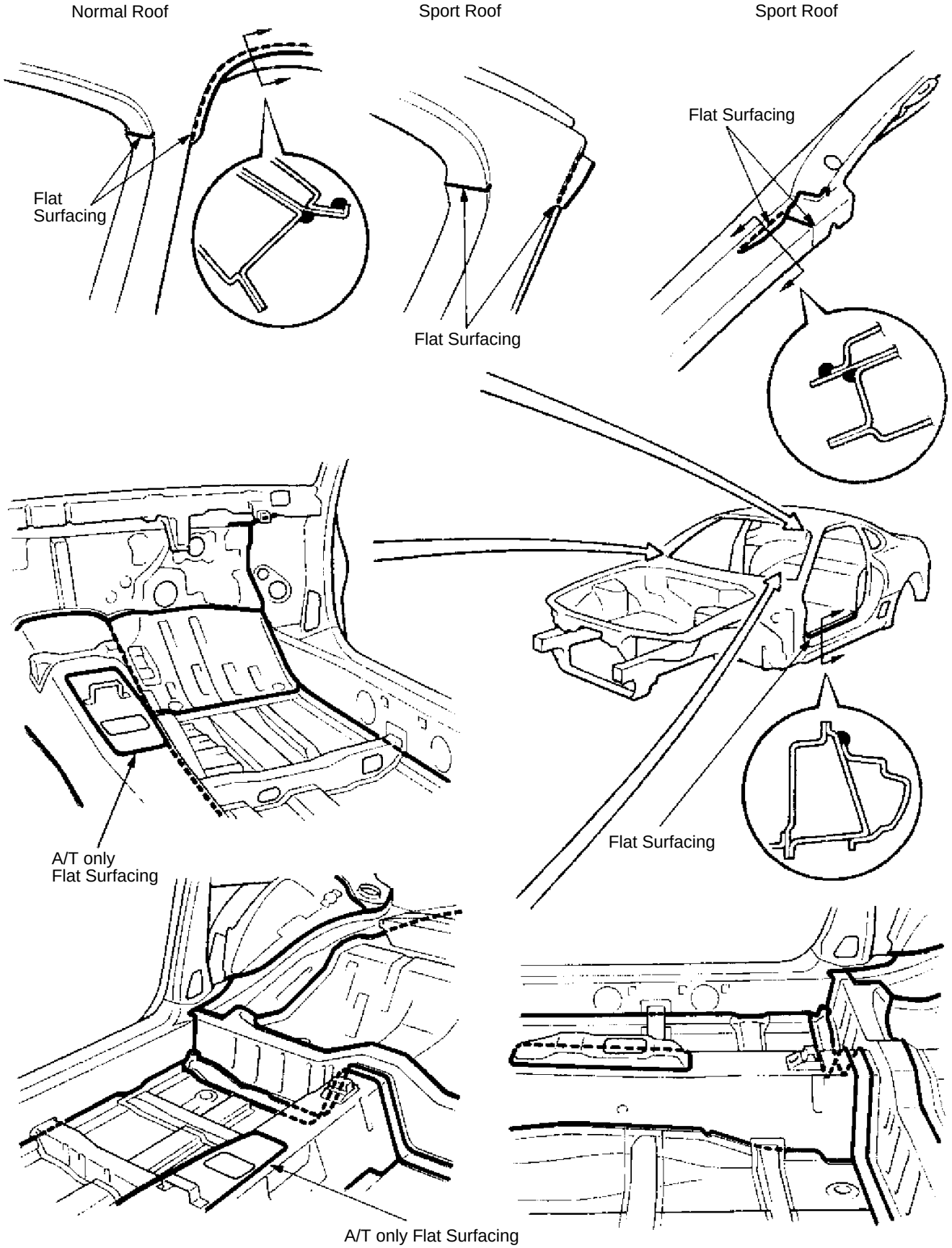
Normal Roof
Sport Roof
Sport Roof
Flat Surfacing
Flat Surfacing
Flat Surfacing
A/T only
Flat Surfacing
Flat Surfacing
A/T only Flat Surfacing

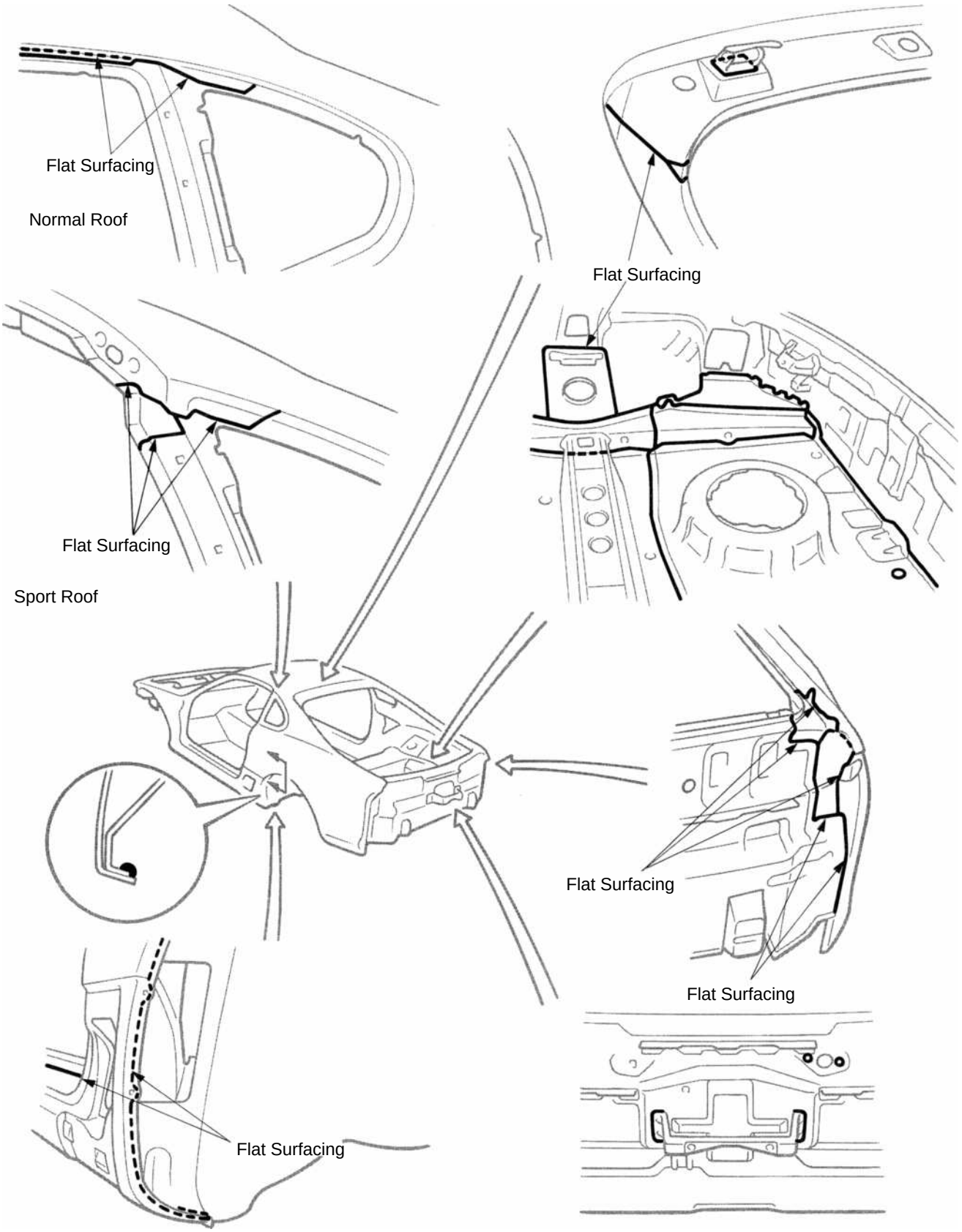
Flat Surfacing
Normal Roof
Flat Surfacing
Flat Surfacing
Sport Roof
Flat Surfacing
Flat Surfacing
Flat Surfacing

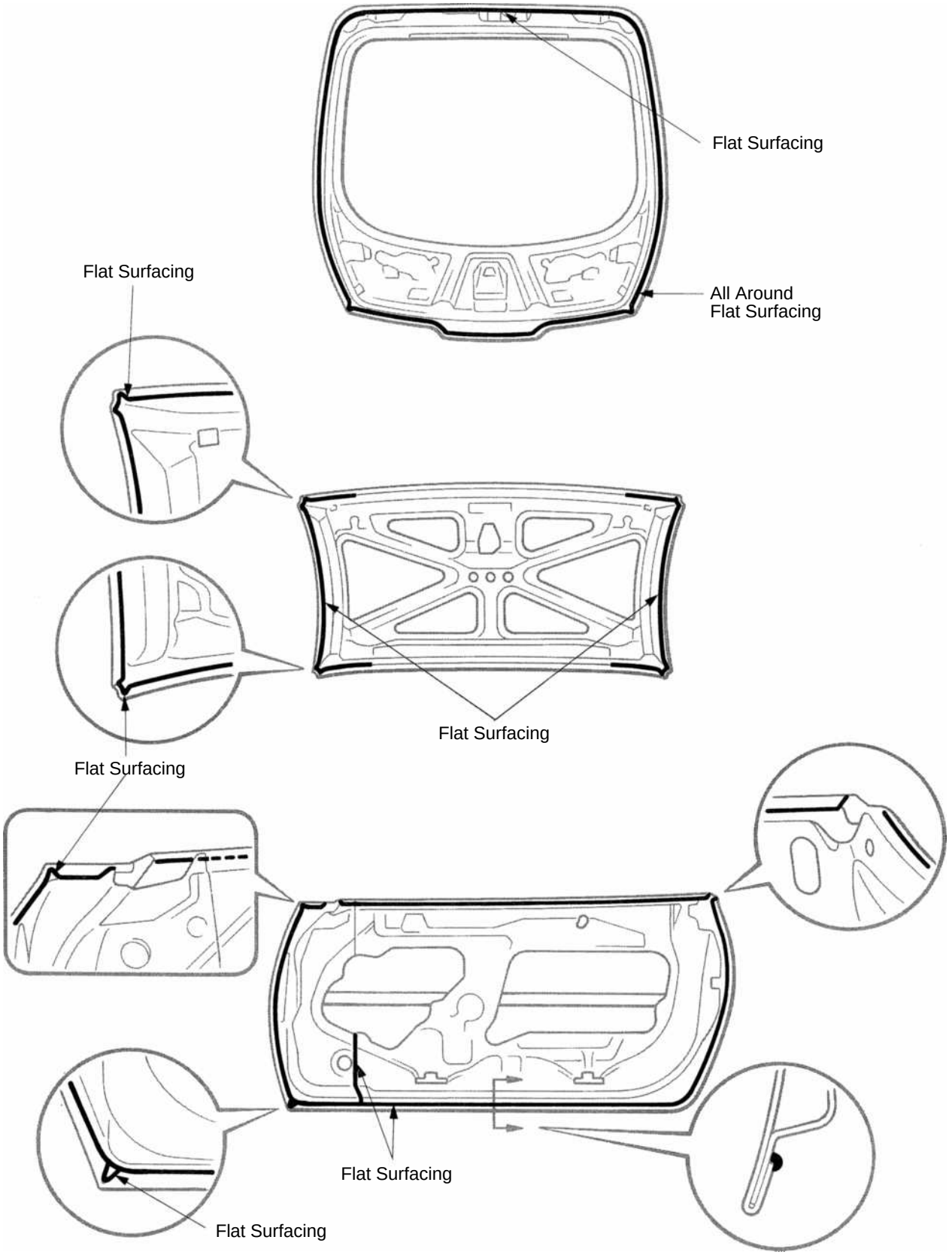
Flat Surfacing
All Around
Flat Surfacing
Flat Surfacing
Flat Surfacing
Flat Surfacing
Flat Surfacing
Flat Surfacing

COWL TOP SIDE PANEL (ASSY)

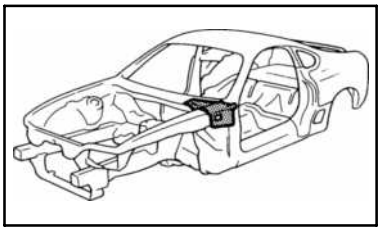

REMOVAL

(Right Side)

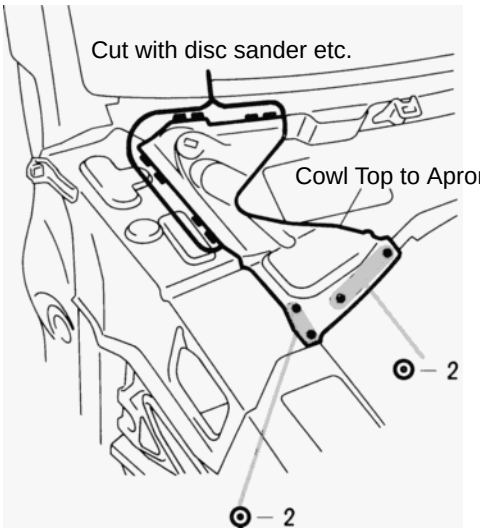

(Left Side)

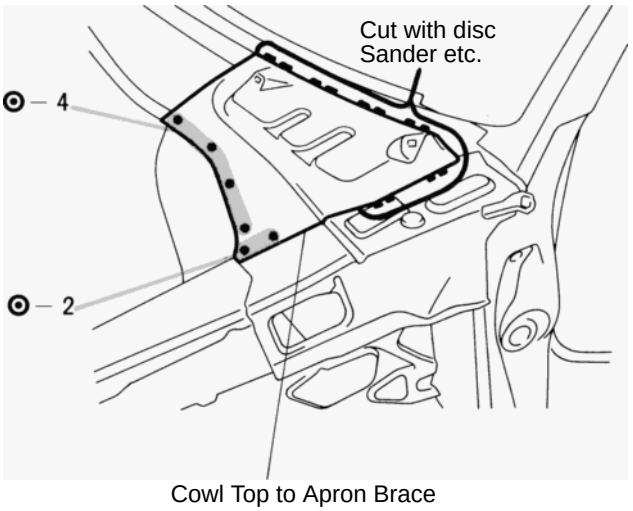

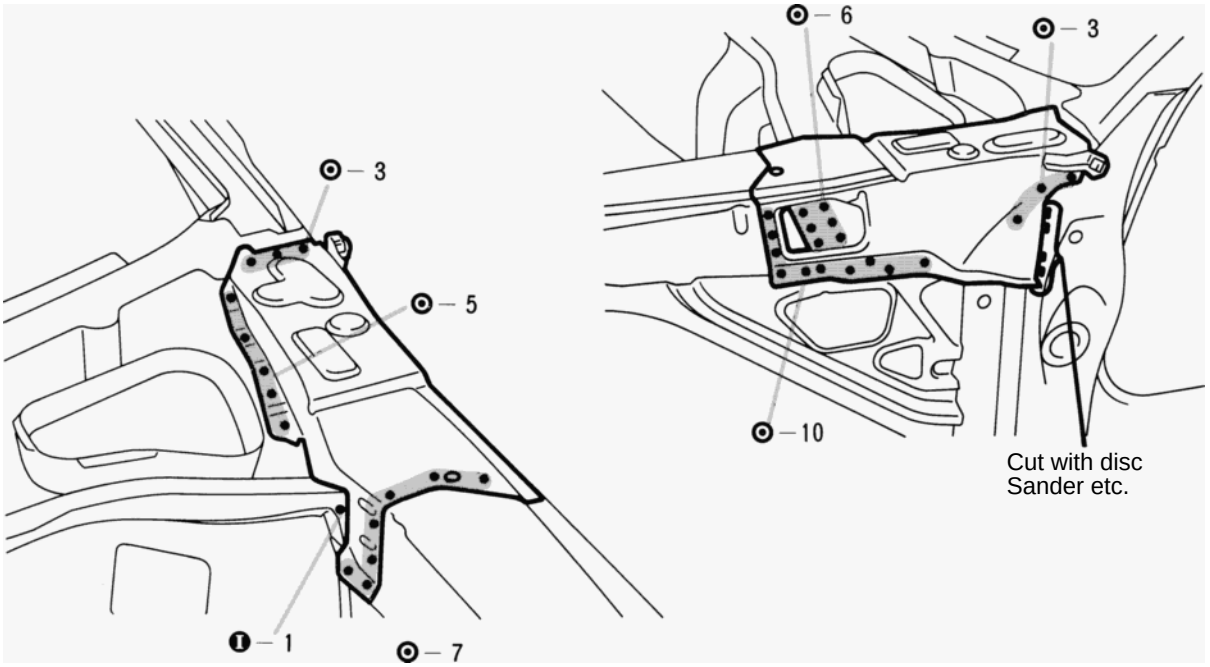

1. After removing the cowl top to apron brace, remove the cowl top side panel.

INSTALLATION

(Right Side)

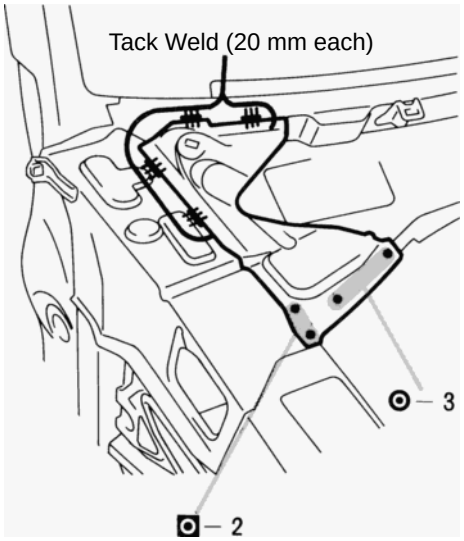

(Left Side)

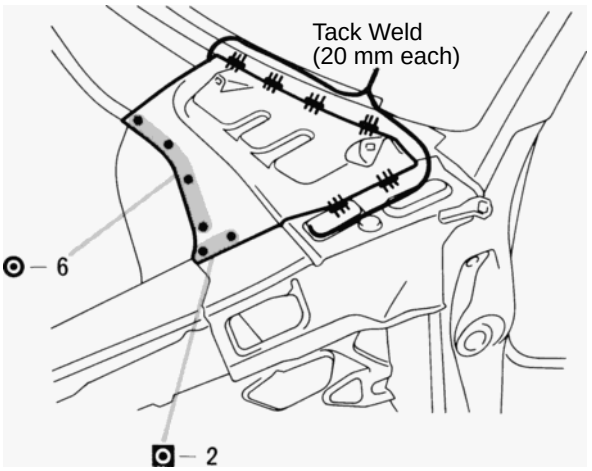

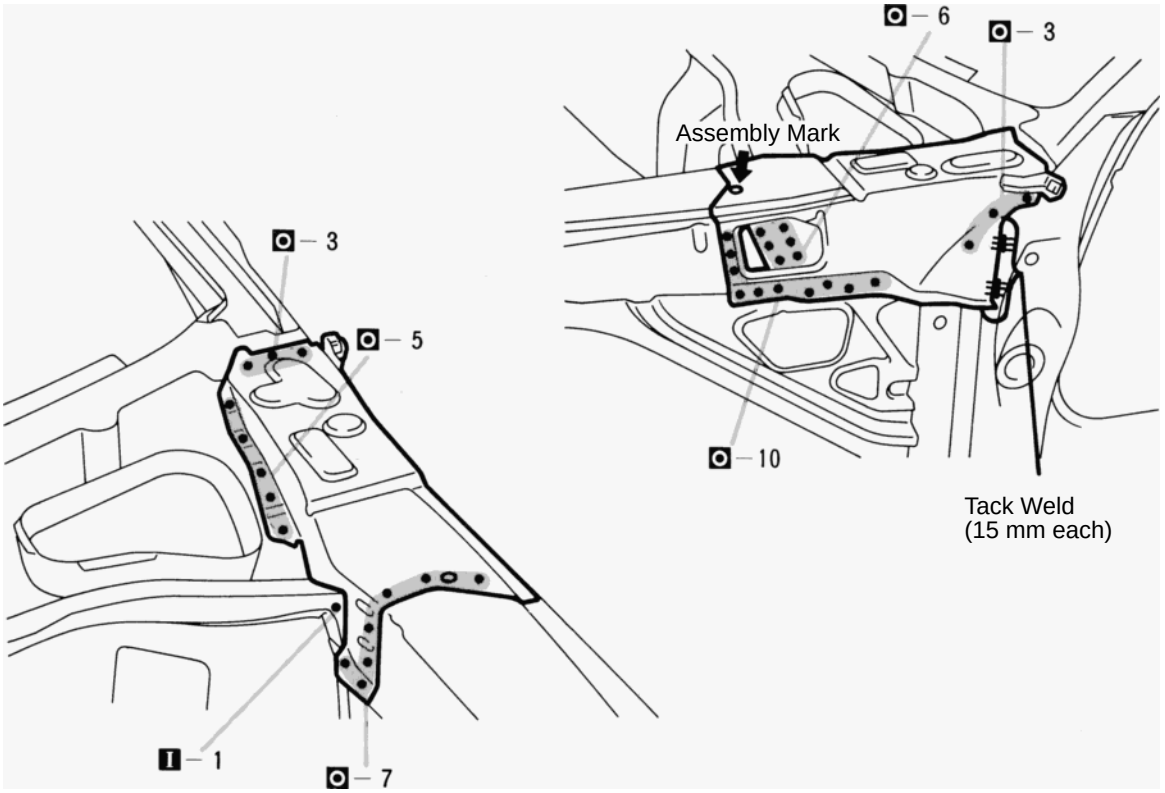

1. When temporarily installing the new parts, determine the installation position by the assembly mark. Then, measure each part in accordance with the body dimension diagram.

mm	in.
15	0.59
20	0.79

COLLISION REPAIR INFORMATION

FOR THE TOYOTA DEALER

TITLE: PAINTLESS DENT REPAIR

SECTION: EXTERIOR BULLETIN # 146

MODELS: TOYOTA, SCION AND LEXUS

DATE: SEPTEMBER 2006

Toyota has developed the following guidelines for the use of "Paintless Dent Repair" (PDR) procedures on all Toyota, Scion and Lexus vehicles.

PDR is used to reduce the cost of repairing minor dents and to avoid color match and refinish issues that may arise. Be sure to choose your PDR service provider carefully and always review their professional qualifications to ensure they are up to date on the latest PDR techniques and procedures.

Repair Precautions

- Always refer to the specific vehicle schematic (available from your PDR provider) for locations where PDR is possible.
- Pay close attention to the locations of accessories and subassemblies that may utilize wire harnesses or drain hoses, etc.
- PDR is often complicated by panel contour, placement of reinforcements, and location of electrical and mechanical components.
- PDR Technicians should be aware of and take the necessary precautions to prevent damage to electrical and mechanical components while performing PDR repairs.

General Repair Guidelines

- The PDR process should only be considered when the exterior paint surface is not broken or cracked. A 30X power hand held microscope (available from most body shop jobbers) should be used to determine if the paint surface shows evidence of cracking.
- Pushing and prying on the back side of body panels can disrupt the factory rust and corrosion protective coatings. PDR technicians must take steps to prevent corrosion coating damage or restore it with approved equivalent materials. PDR service companies performing PDR repairs should be knowledgeable and capable of restoring corrosion protective coatings damaged during PDR repairs.

PLEASE ROUTE THIS BULLETIN TO YOUR COLLISION REPAIR CENTER MANAGER AND COLLISION REPAIR TECHNICIANS

- Prying, pushing, or pulling on body panels may cause stretching beyond the flexible limits of the paint coatings causing delamination (paint coating separation) or micro-cracking. These conditions may not be immediately detectable (use a 30X magnifying hand-held microscope to inspect for cracks).

  Important: The PDR process uses special tools to access otherwise inaccessible areas. Drilling of holes, prying away or cutting reinforcements or welded structural components to gain access to perform a PDR is strictly prohibited and, if done, may void the manufacturer's corrosion protection warranty.

- Using blocks or wedges between window moldings and door glass (for tool access) is also prohibited. This process can damage window moldings and reduce the factory designed-in pressure of the inner belt molding on the base of the door glass.
- Window guard protectors must be used to protect window glass during PDR operations.

Specific Repair Guidelines

- Panels with multiple dents, including hail damage, may be considered for PDR as long as the original panel integrity (strength) is maintained. If a panel exhibits any evidence of loss of strength due to the number of dents, the panel should not be considered for PDR. If after performing a PDR repair the panel exhibits evidence of loss of strength, the panel must be repaired using conventional body shop processes.
- Round/oval dents may be removed if they are 2 inches or more away from panel edges or body lines and are no larger than the diameter of a soft ball.
- Creases that are up to 4" long may be considered for removal.

  Note: sharp creases cannot be removed using PDR.

- Dents or protrusions, of up to 6mm, from the reverse side, on hoods, trunks, fenders, and quarter panels may be considered, but extreme caution must be used during this type of repair due to the higher potential of damaging the paint surface. Remember no broken paint.

PLEASE ROUTE THIS BULLETIN TO YOUR COLLISION REPAIR CENTER MANAGER AND COLLISION REPAIR TECHNICIANS

FIT STANDARDS

After doors and the engine hood are installed, be sure to perform fit adjustment to prevent abnormal wind noise and ensure a good appearance.

mm	in.
4.5	0.177
4.6	0.181
5.0	0.197
6.5	0.256
9.2	0.362

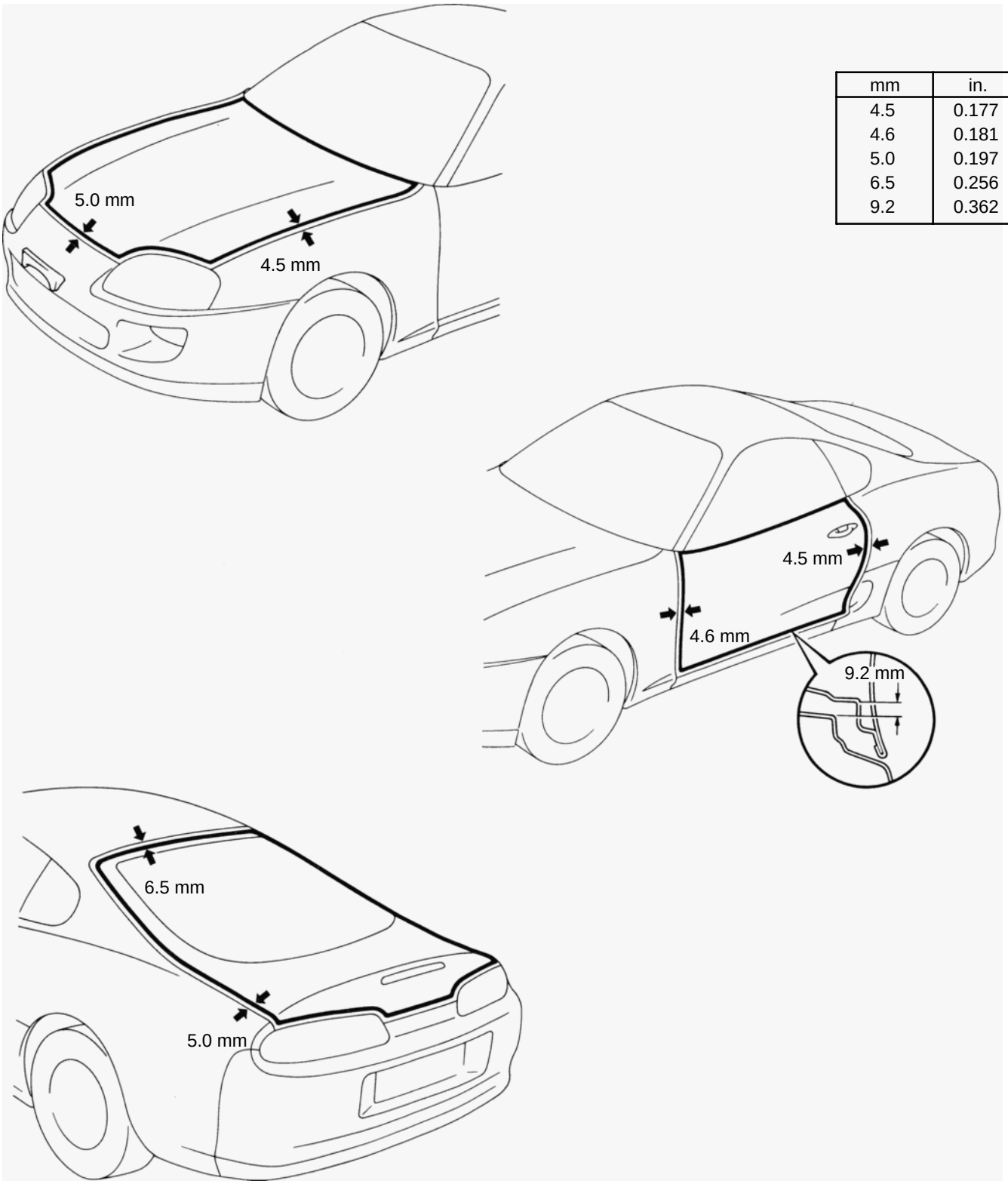

FOAMED MATERIAL APPLICATION AREAS

The sections shown in the figure below are filled with foamed material to provide noise insullation.
After repairing these sections or their peripheries, refill with foamed materials.
HINT:

1. *Use the service holes located on the reverse side of the body panel to refill with foamed materials.*
2. *When handling foamed material, follow the directions of the material's manufacturer.*

NORMAL ROOF

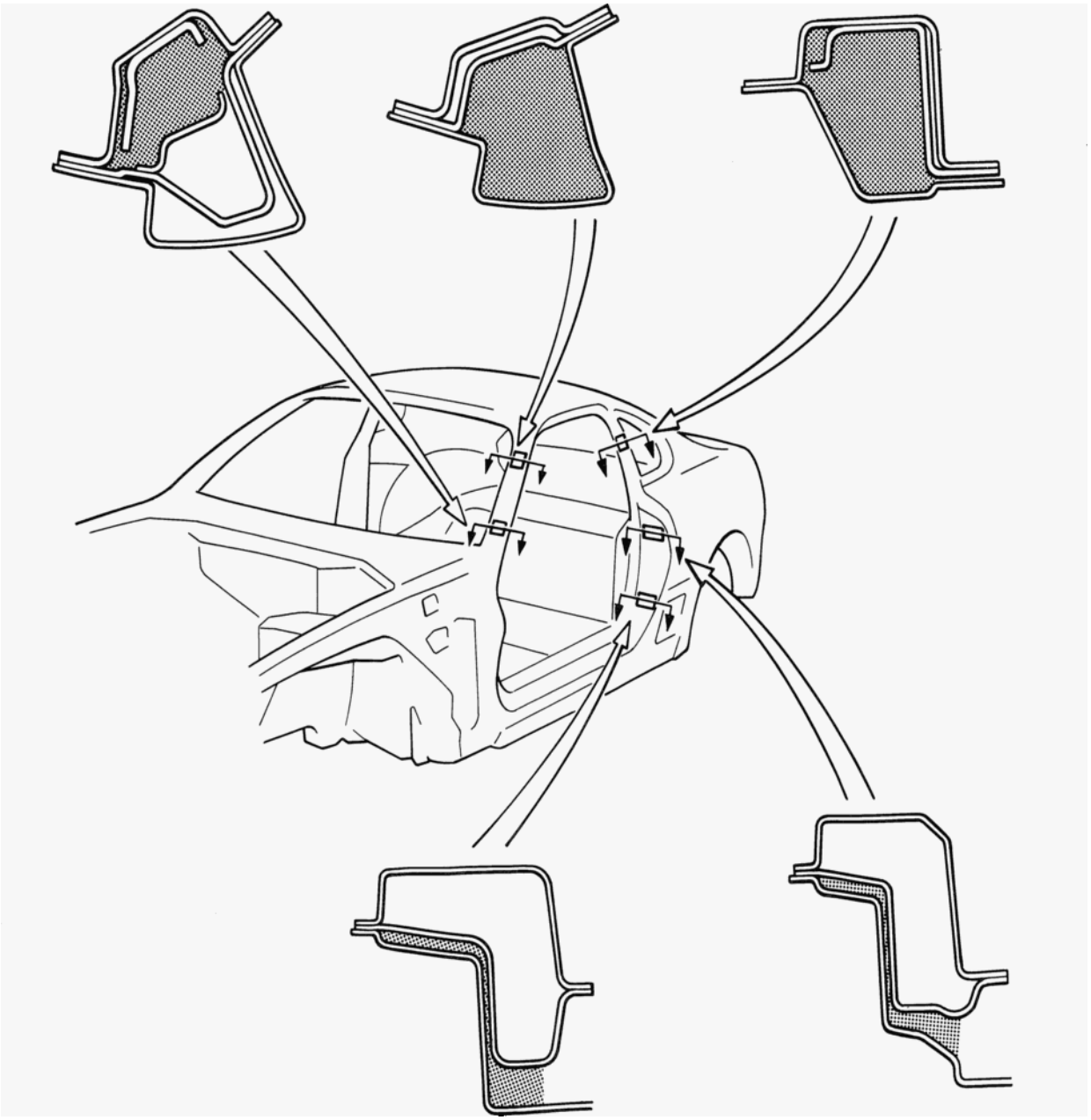

SPORT ROOF

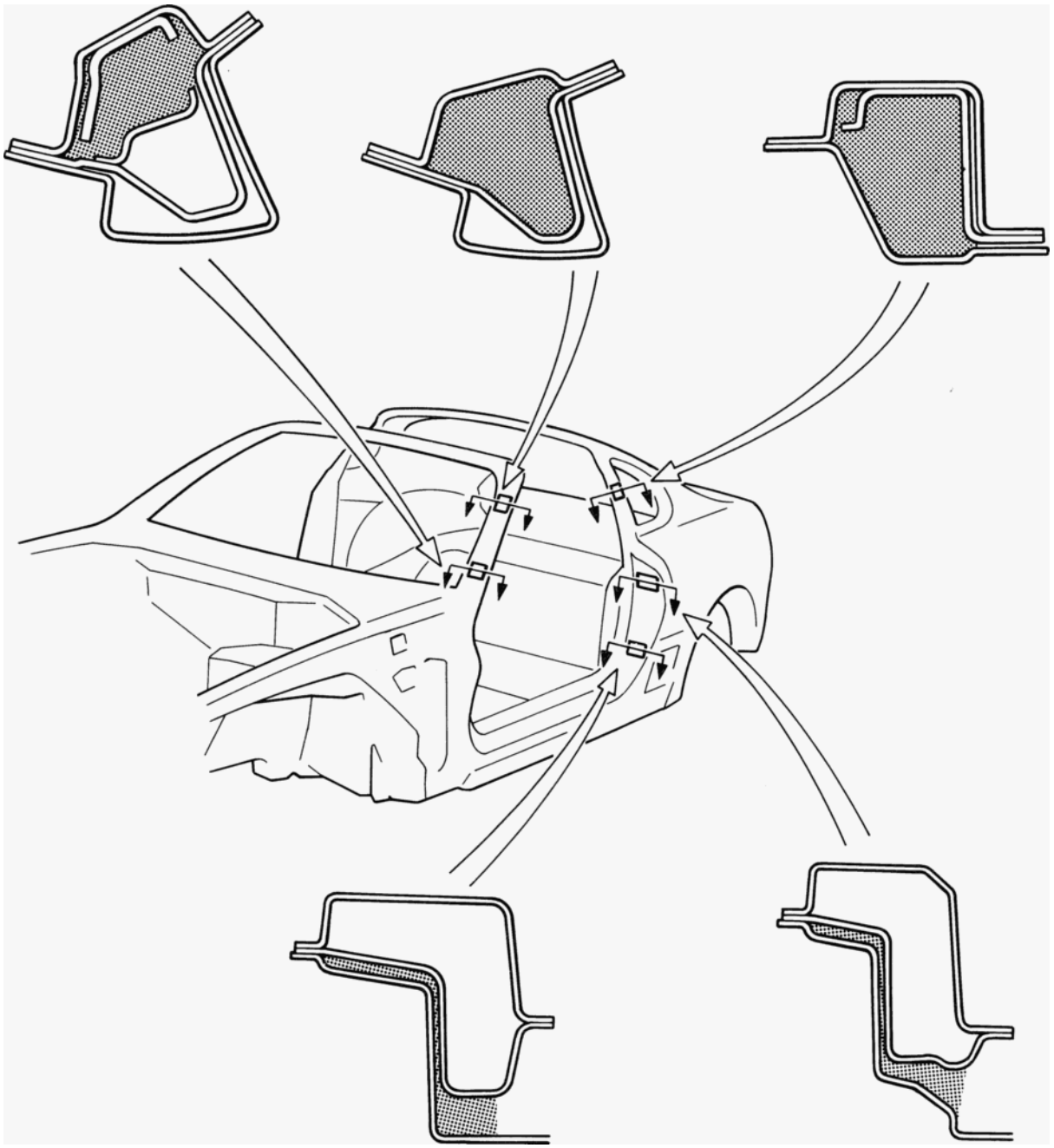

FRONT FENDER APRON (ASSY)

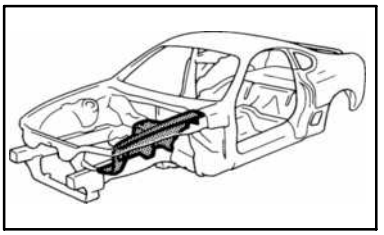

REMOVAL (With the radiator upper support removed.)

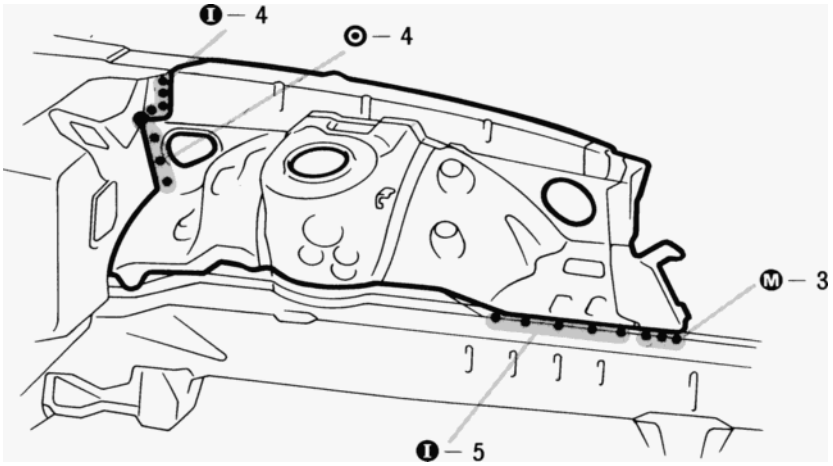

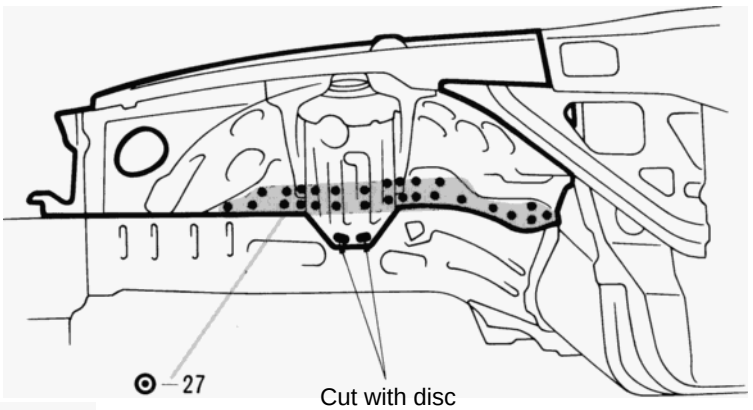

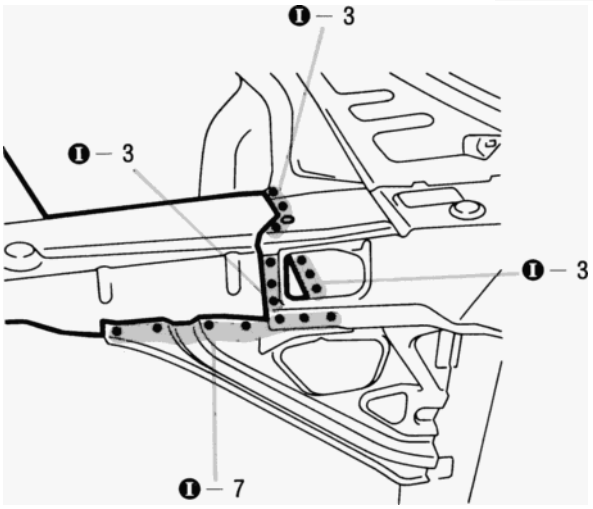

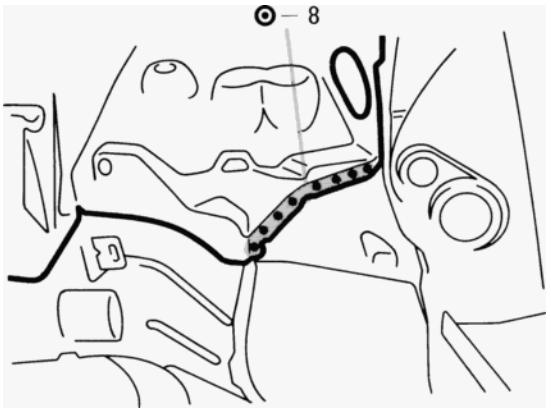

INSTALLATION

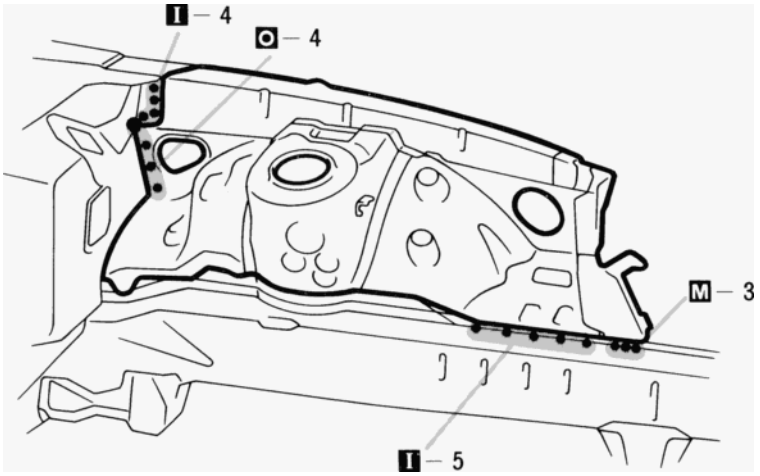

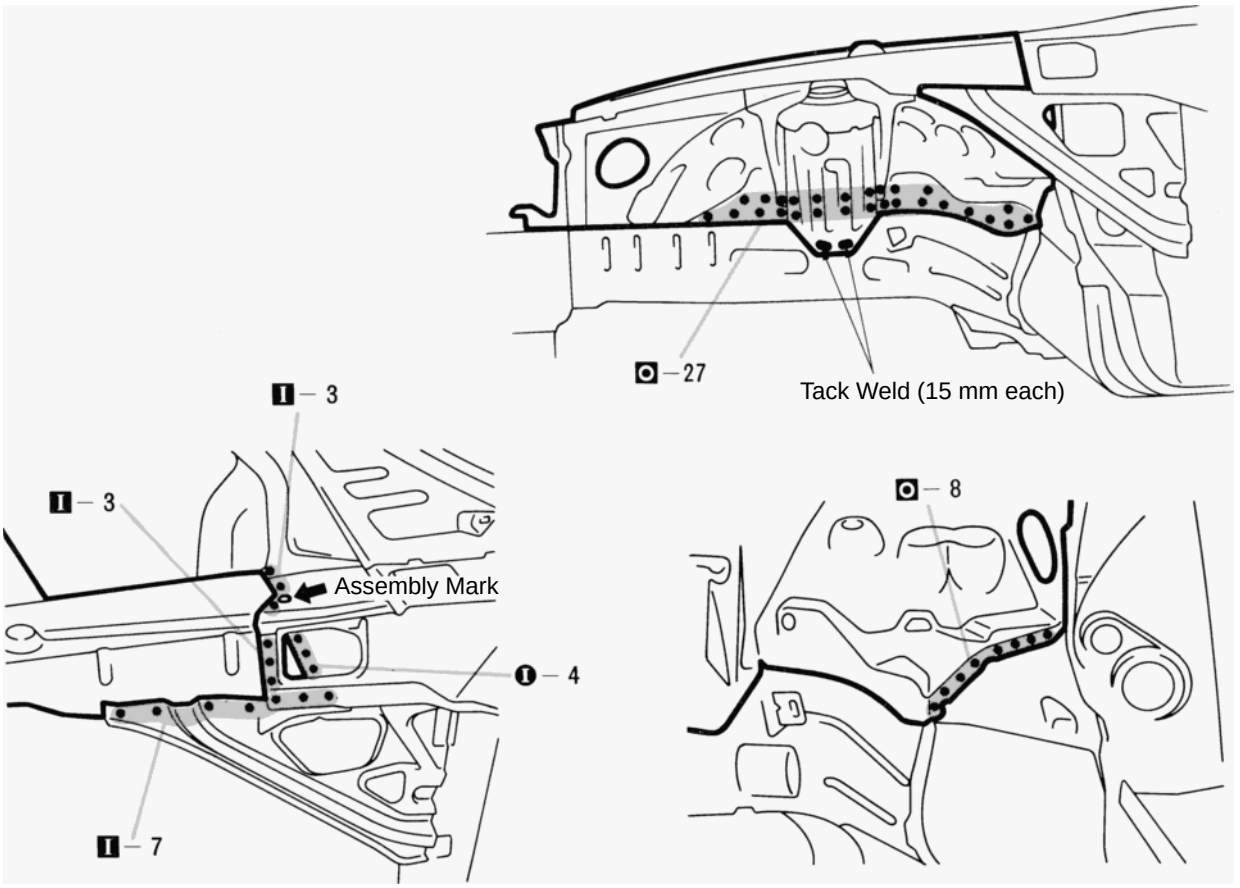

1. When temporarily installing the new parts, determine the installation position by the assembly mark.
2. Measurements must be accurate with the body dimension diagram, as this affects the front wheel alignment.
3. Temporarily install the front fender and hood, and check the fit.

mm	in.
15	0.59

FRONT SIDE MEMBER (ASSY)

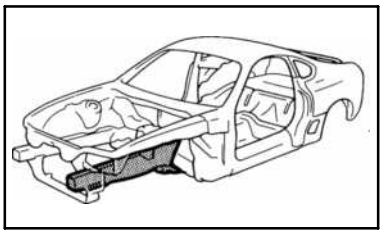

REMOVAL (With the front crossmember and front fender apron removed.)

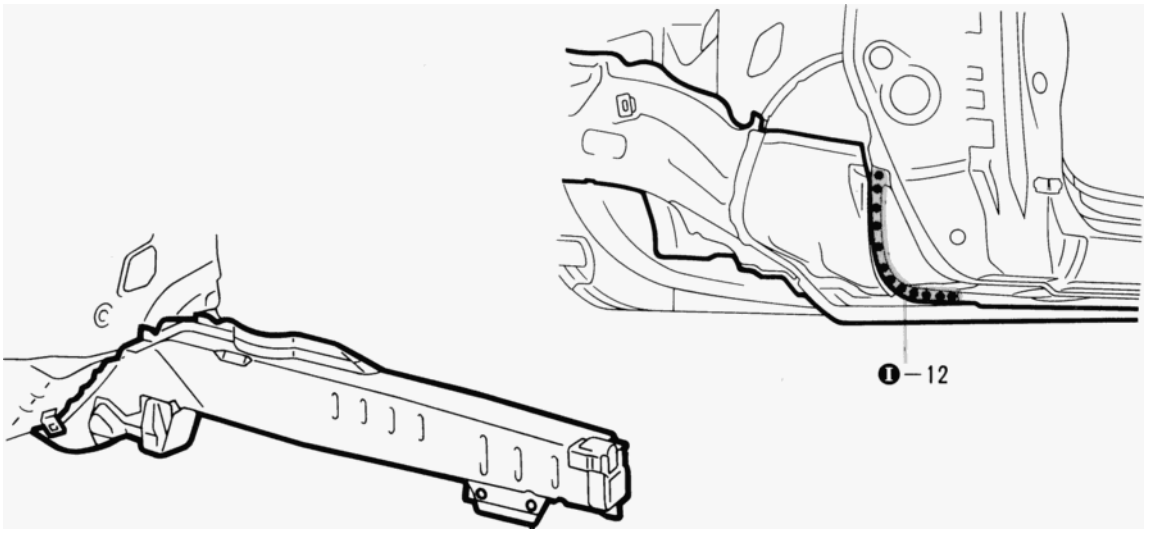

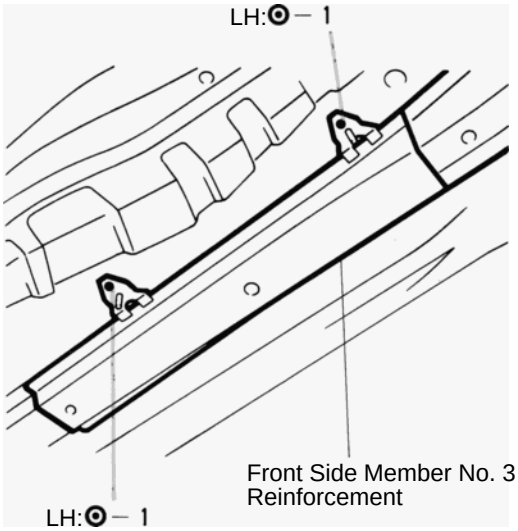

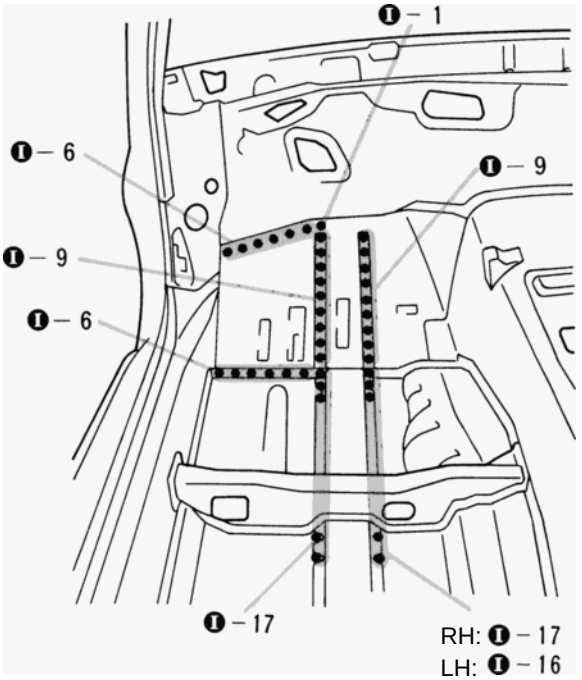

1. Replace the front side member No. 3 reinforcement at the same time.

INSTALLATION

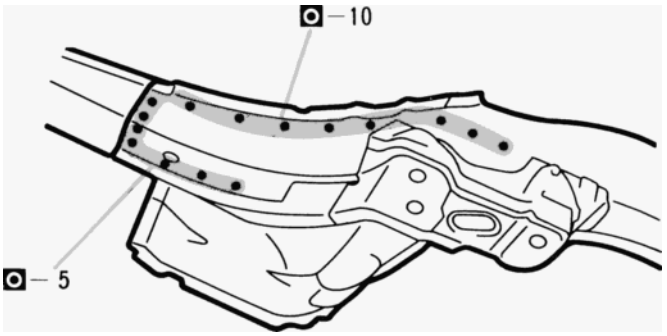

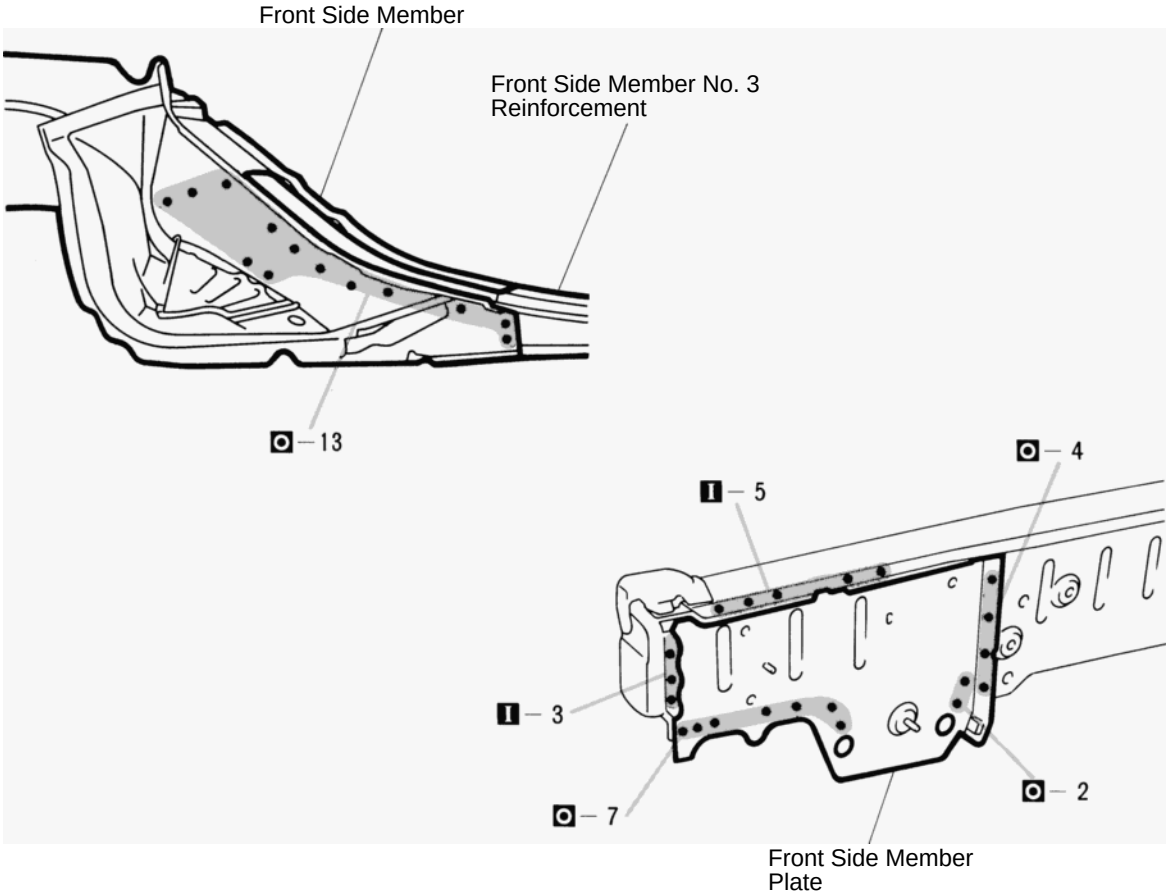

1. Before temporarily installing the new front side member, weld the front side member No. 3 reinforcement with standard points.
2. Temporarily install the new parts and measure each part in accordance with the body dimension diagram.

HINT: Make sure each measurement is correct, as this part affects the front wheel alignment.

INSTALLATION (Cont'd)

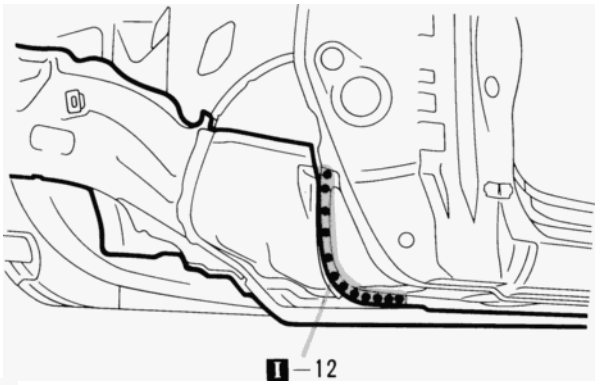

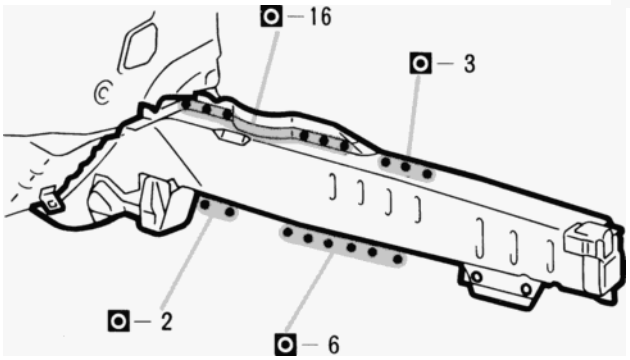

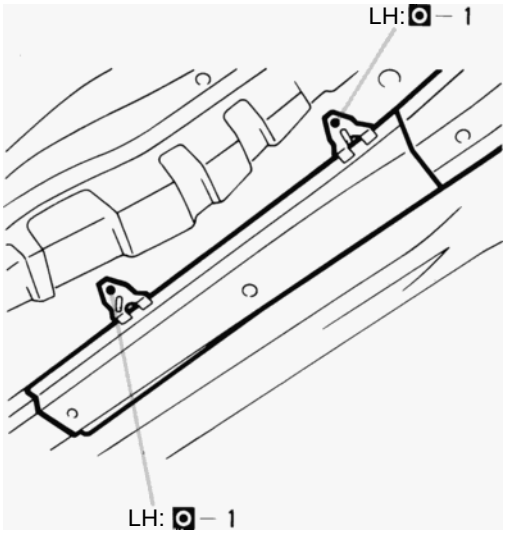

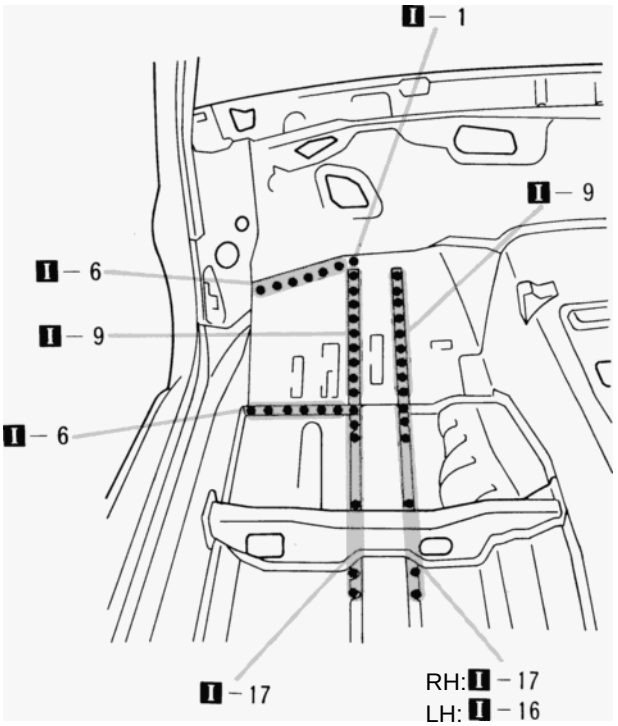

FRONT BODY PILLAR (CUT): SPORT ROOF

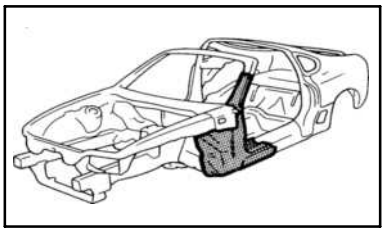

REMOVAL (With the cowl top side panel removed.)

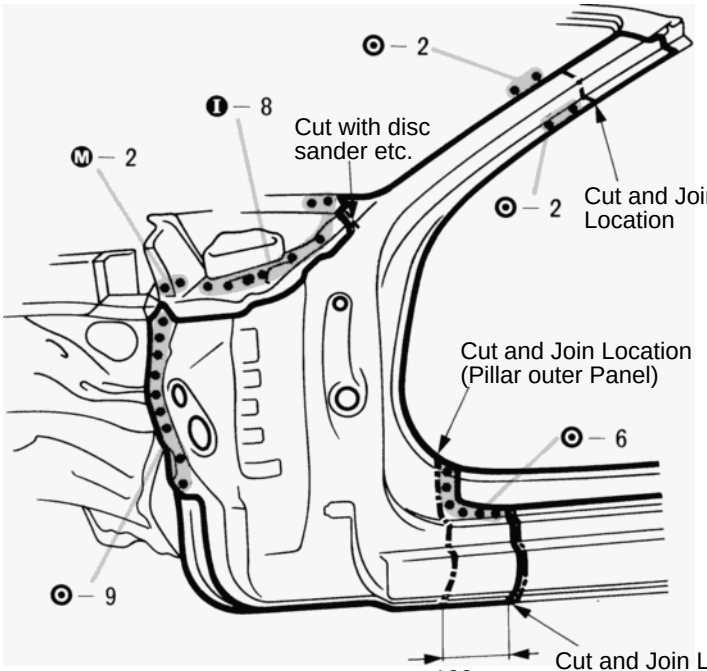

(Cut and Join Location)

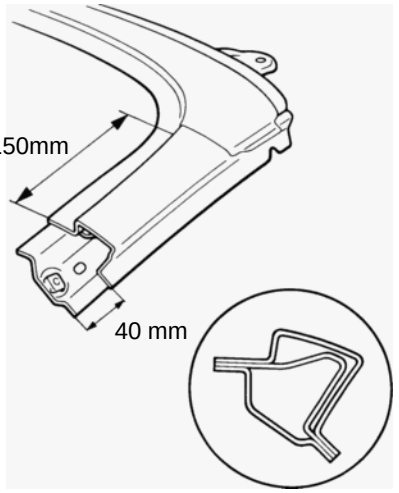

(Cut and Join Location)

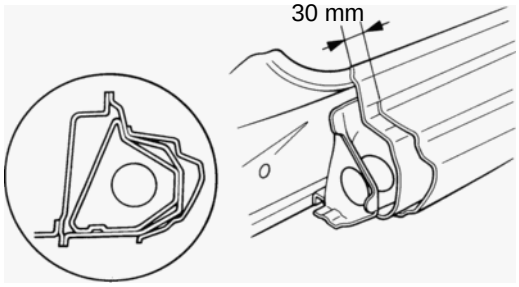

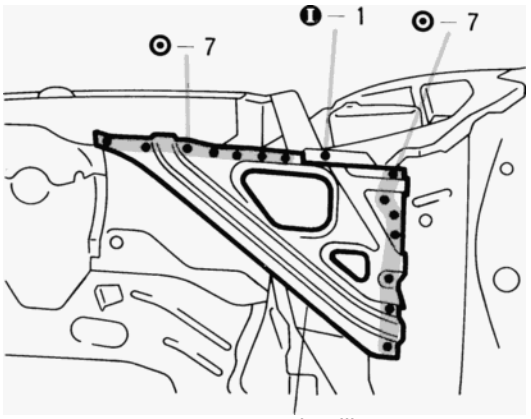

1. Cut and join the part at the locations shown above.

HINT:

1) Cut the front body pillar outer panel at a 40 mm (1.57in.) offset from the inner panel as shown.

2) The cut location of the rocker panel reinforcement is made 30 mm (1.18 in.) to the front of the rocker outer panel cut location, as shown.

2. The rocker panel reinforcement cut location is made 100mm (3.94 in.) to the front of the outer panel cut location, avoid damaging the No. 4 reinforcement.

mm	in.
30	1.18
40	1.57
100	3.94
150	5.91

REMOVAL (Cont'd)

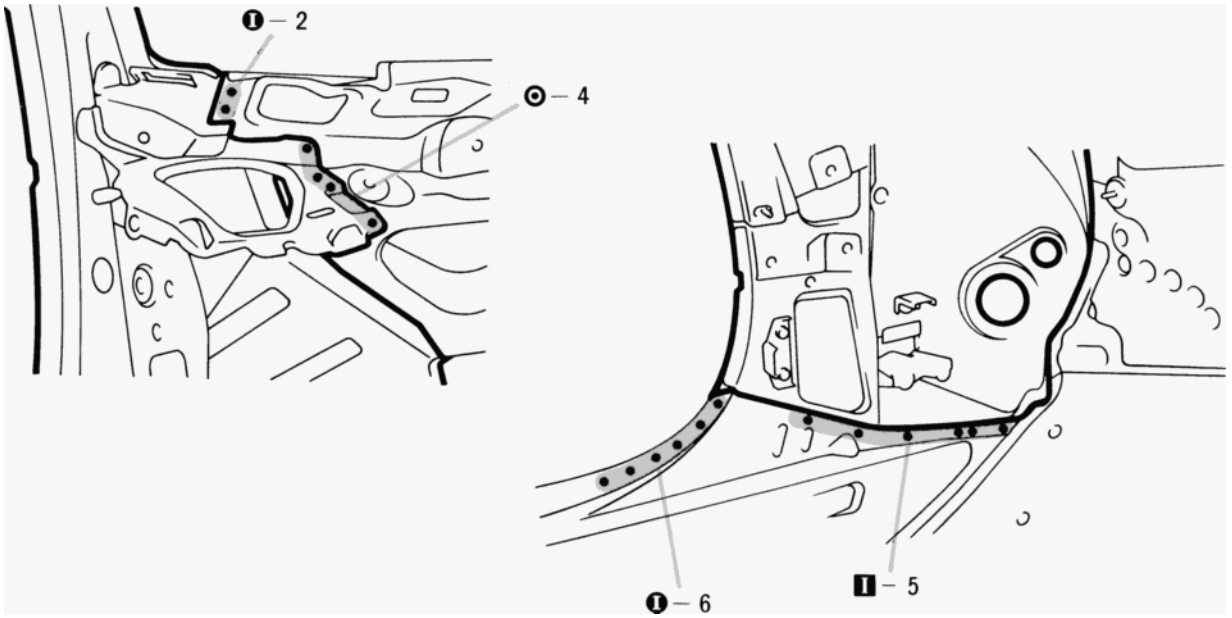

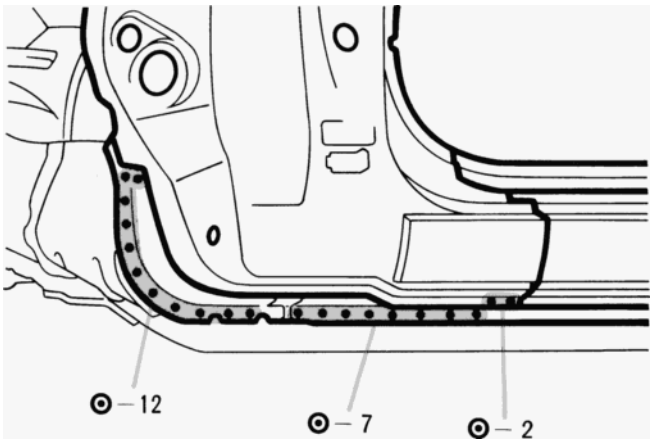

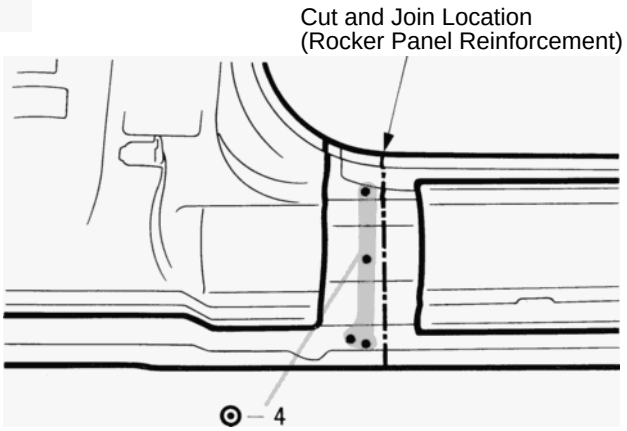

3. After removing the front body pillar lower gusset, remove the front body pillar.

INSTALLATION

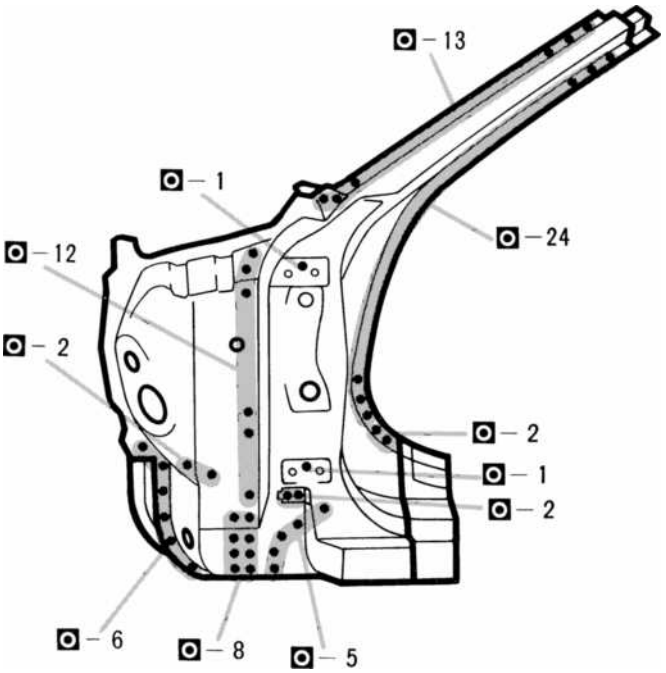

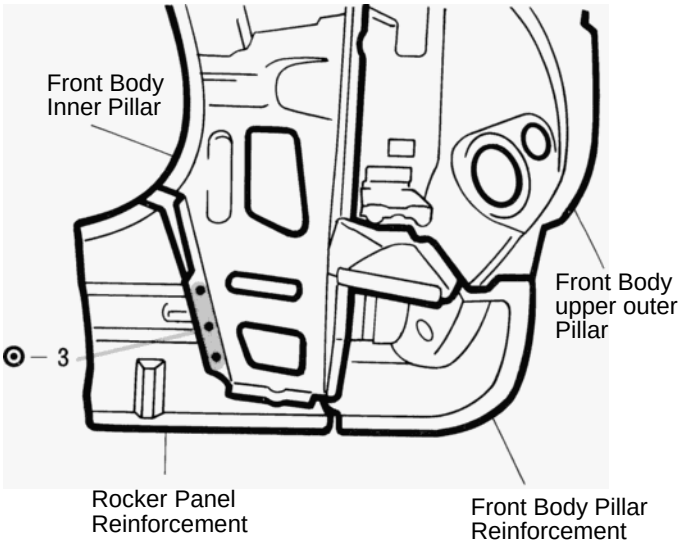

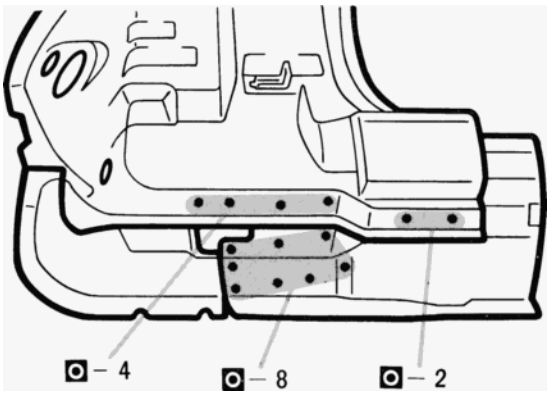

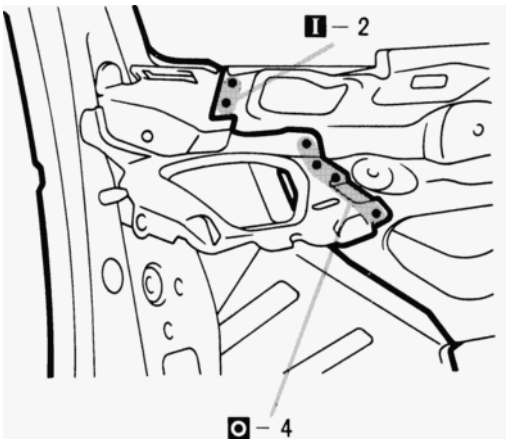

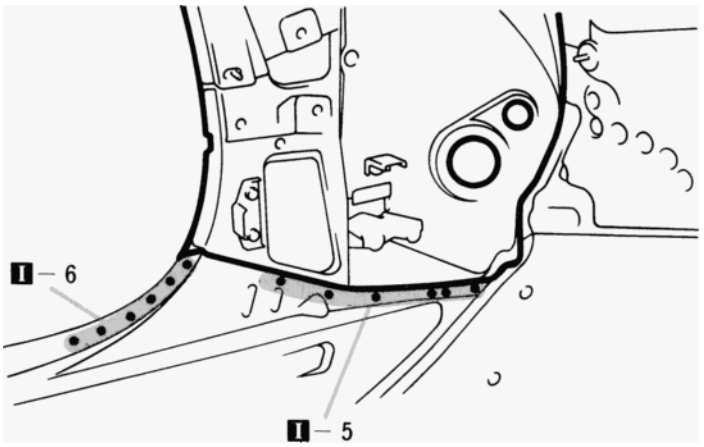

1. Before installing the outer panel, inner reinforcement, inner pillar and rocker panel reinforcement, assemble the parts and weld them according to the standard number of welds as shown above.
2. Temporarily instal the new parts and measure each part in accordance with the body dimension diagram.

INSTALLATION (Cont'd)

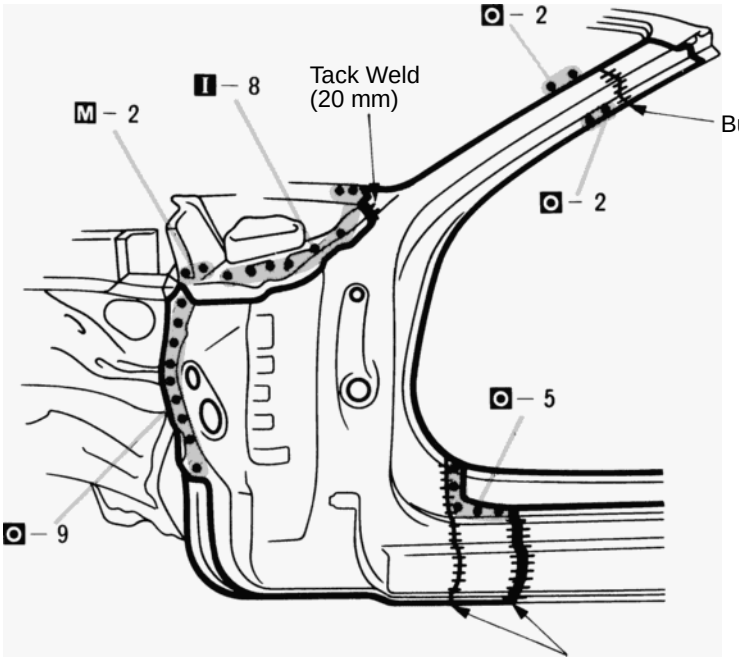

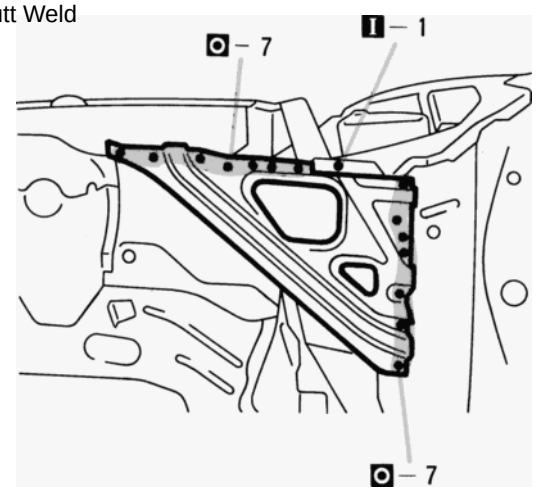

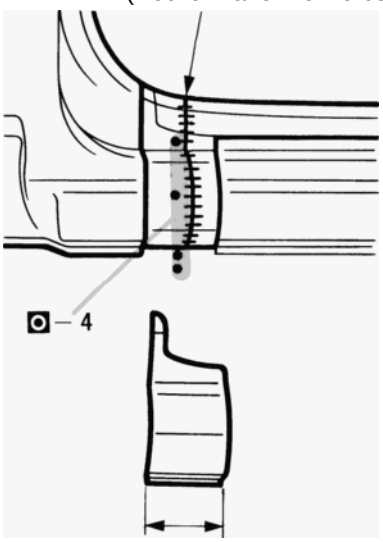

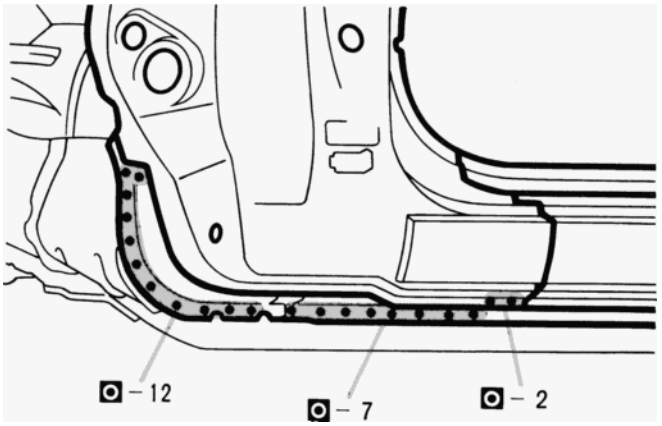

mm	in.
20 100	0.79 3.94

3. Before welding the new parts, check the fit of the front door, front fender and windshield glass.
4. A 100mm (3.94 in.) wide access hole should be made in the rocker outer panel. After butt welding the rocker panel reinforcement, reattach the rocker outer panel by welding.
5. After installing the new parts, apply foamed material.

HINT: For the foamed material application areas, refer to page AP-4 .

FRONT APRON TO COWL SIDE UPPER MEMBER (ASSY)

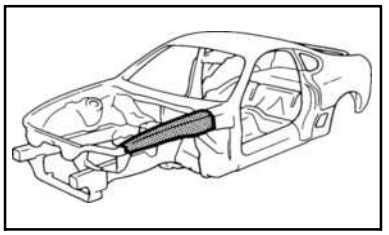

REMOVAL (With the front fender front apron removed.)

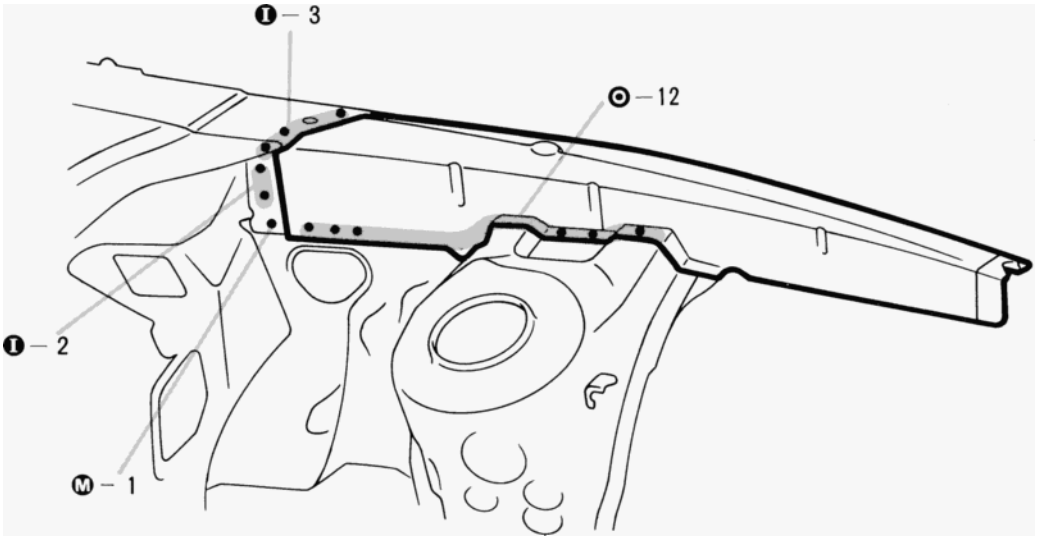

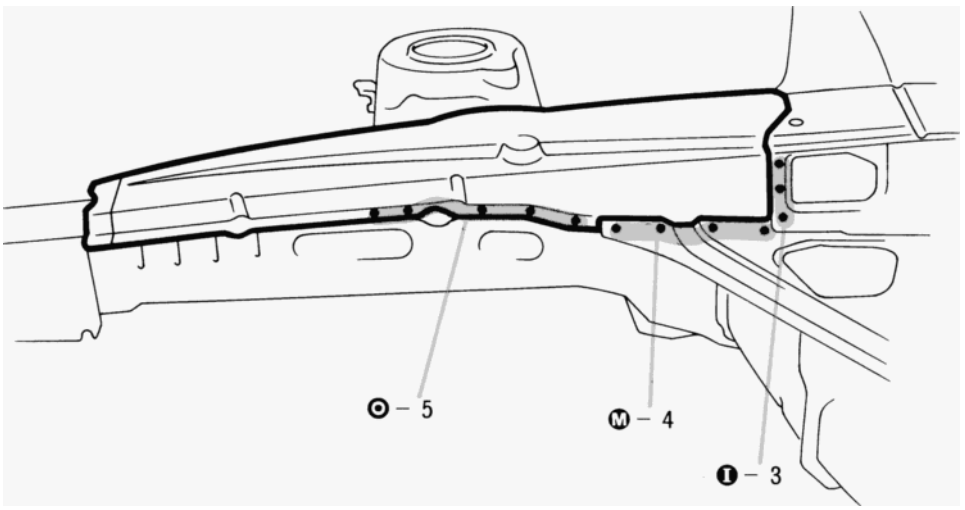

INSTALLATION

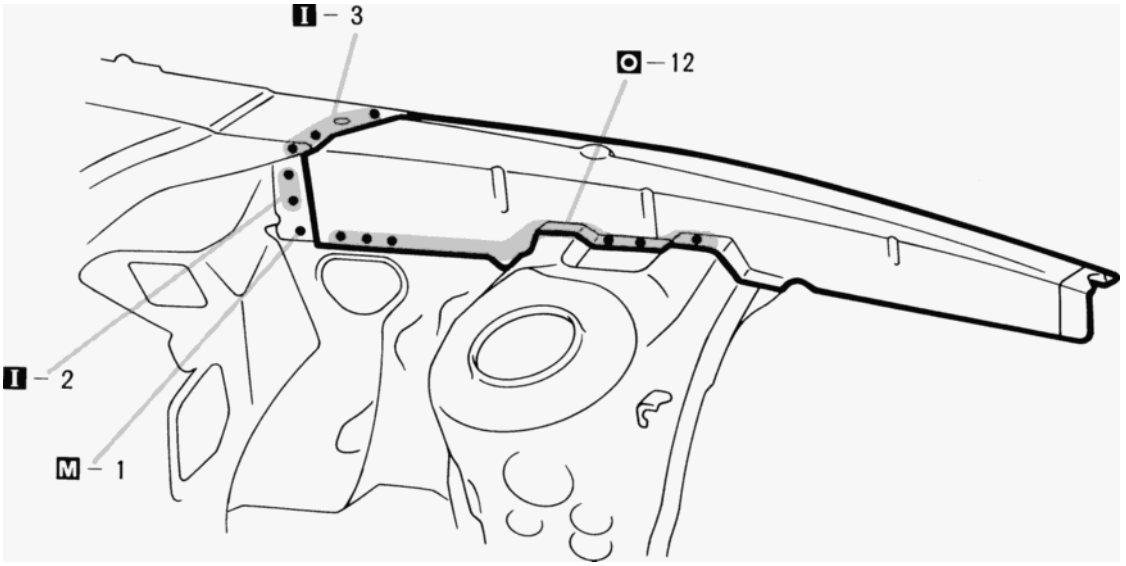

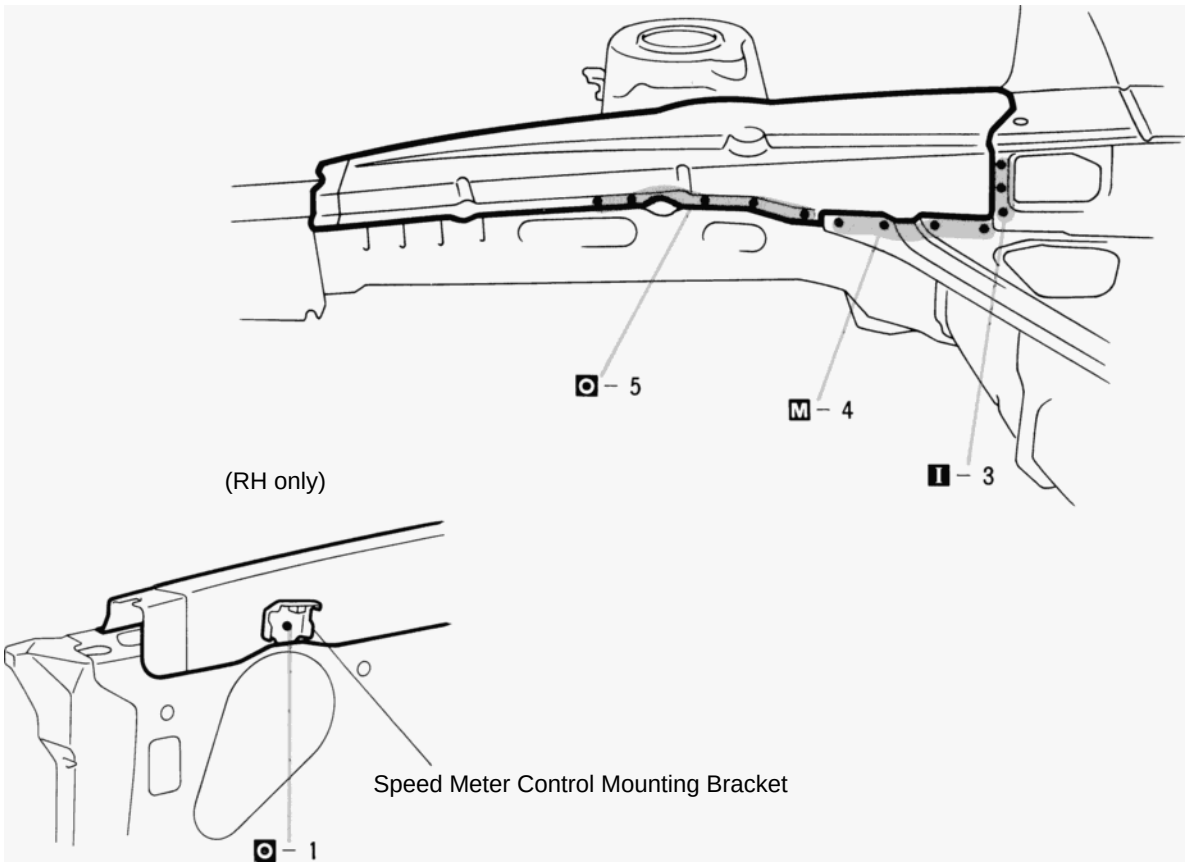

1. Temporarily install the new parts and measure each part in accordance with the body dimension diagram.
2. Temporarily install the front fender and hood, and check the fit.

FRONT BODY PILLAR (CUT): Normal Roof

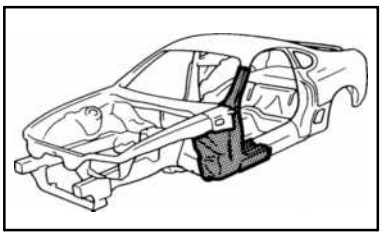

REMOVAL (With the cowl top side panel removed.)

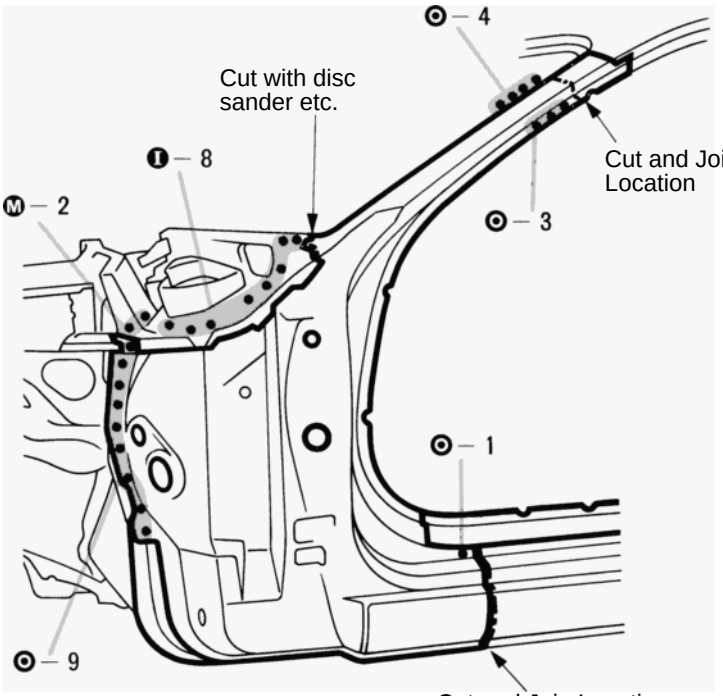

(Cut and Join Location)

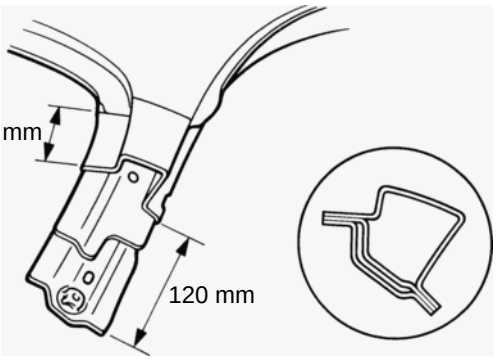

(Cut and Join Location)

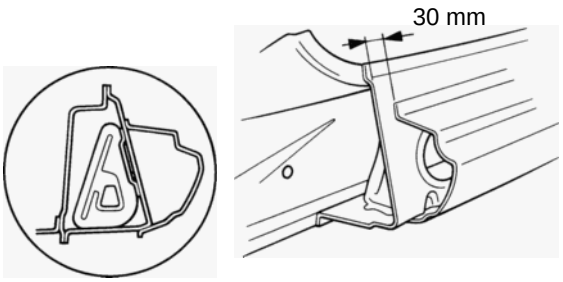

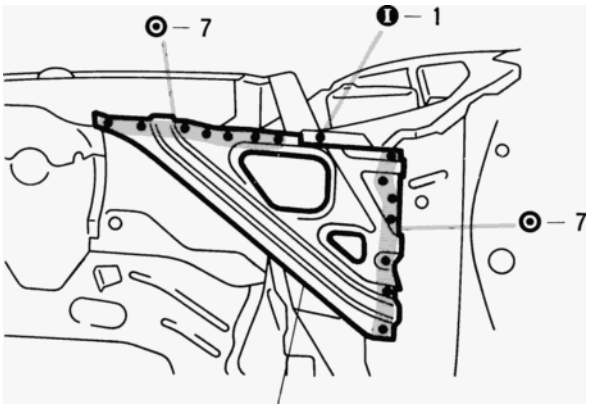

Front Body Pillar Lower Gusset

1. Cut and join the parts at the locations shown above.

HINT:

1) Cut the front body pillar outer panel at a 120 mm (4.72in.) offset from the inner panel as shown above right.

2) The cut location of the rocker panel reinforcement is made 30mm (1.18in) to the front of the rocker panel inner cut location, as shown.

2. After removing the front body pillar lower gusset, remove the front body pillar.

mm	in.
30	1.18
70	2.76
120	4.72

REMOVAL (Cont'd)

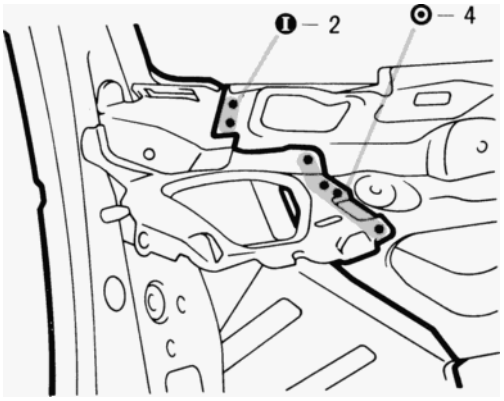

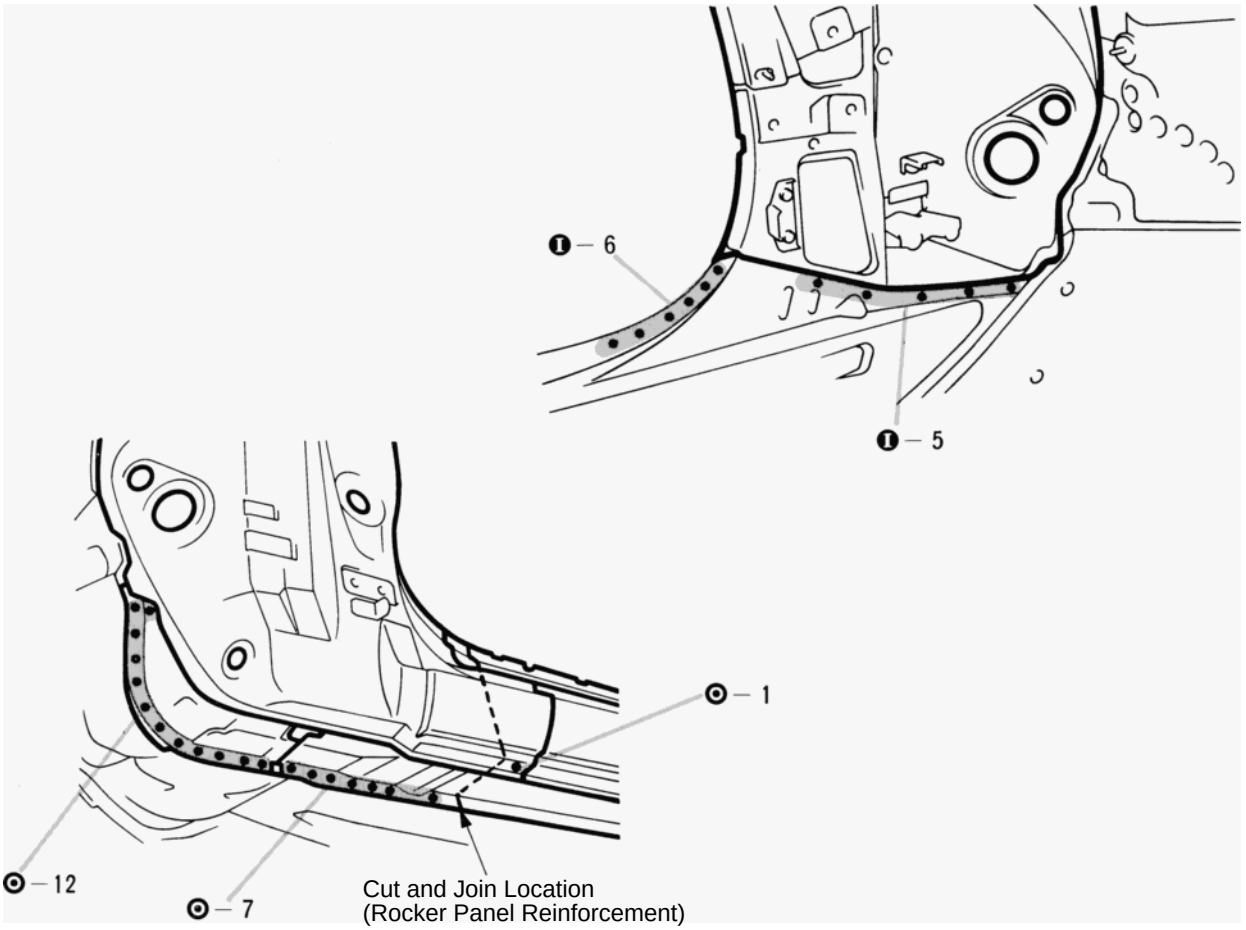

INSTALLATION

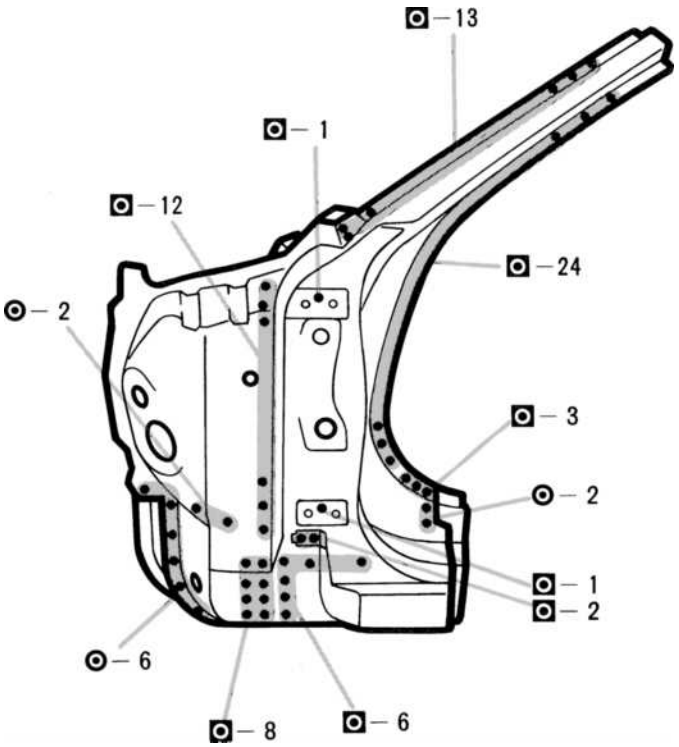

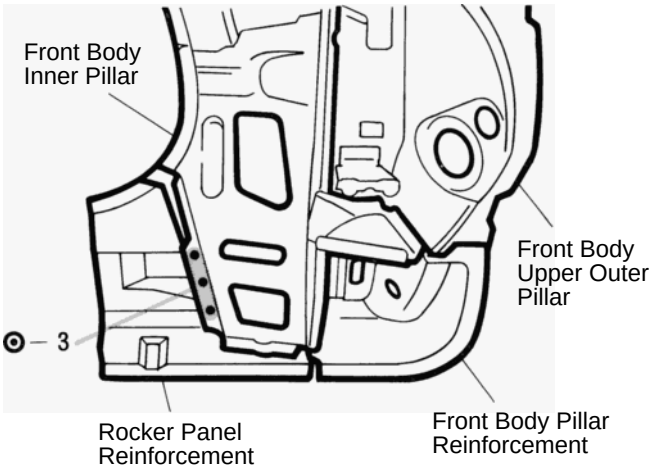

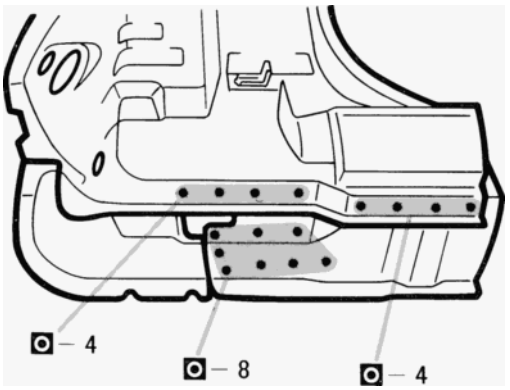

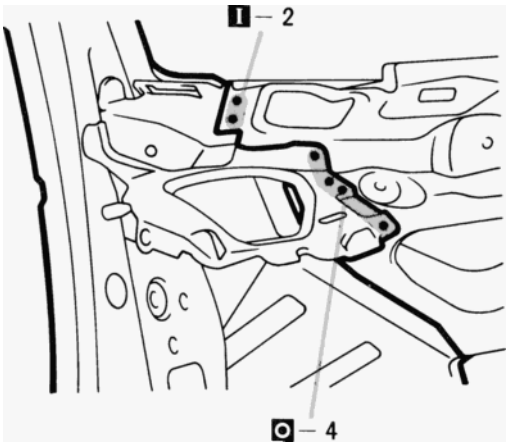

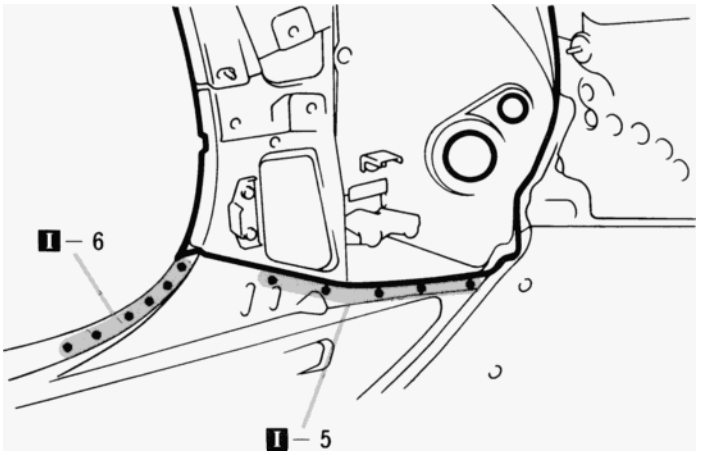

1. Before installing the outer panel inner reinforcement, inner pillar and rocker panel reinforcement, assemble the parts and weld them according to the standard number of welds as shown above.
2. Temporarily install the new parts and measure each part in accordance with the body dimension diagram.

INSTALLATION (Cont'd)

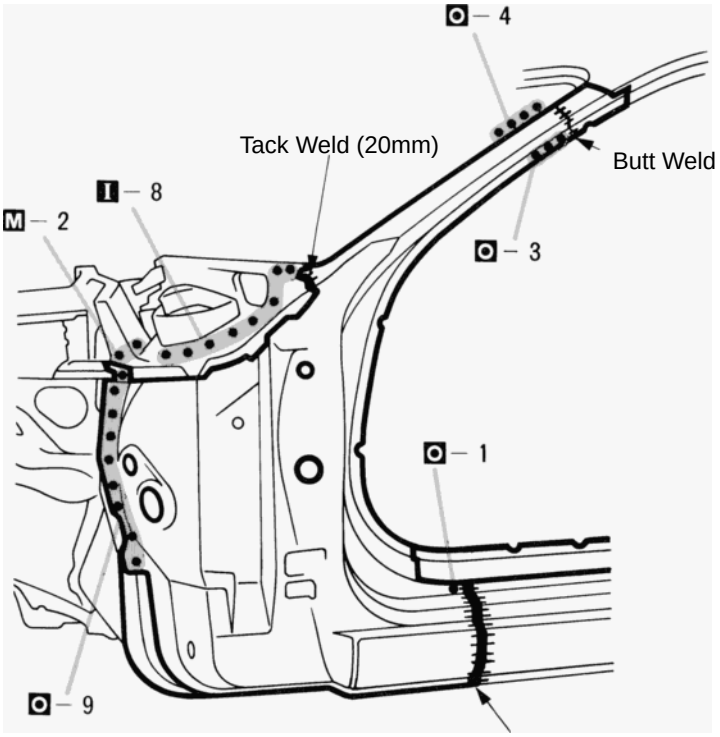

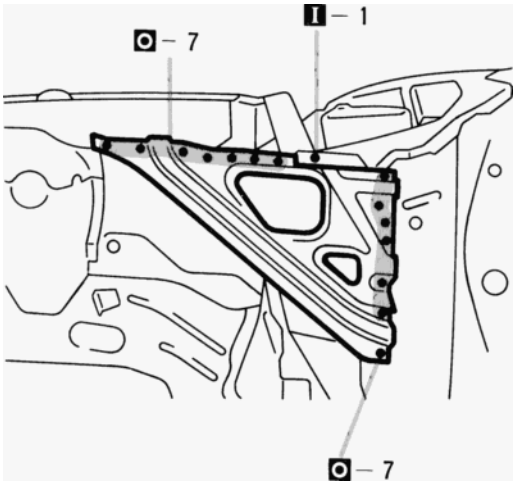

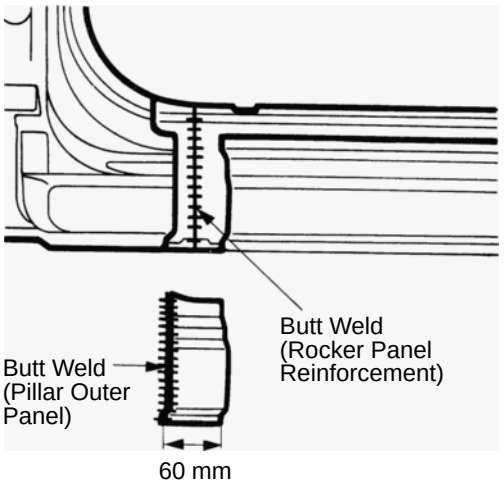

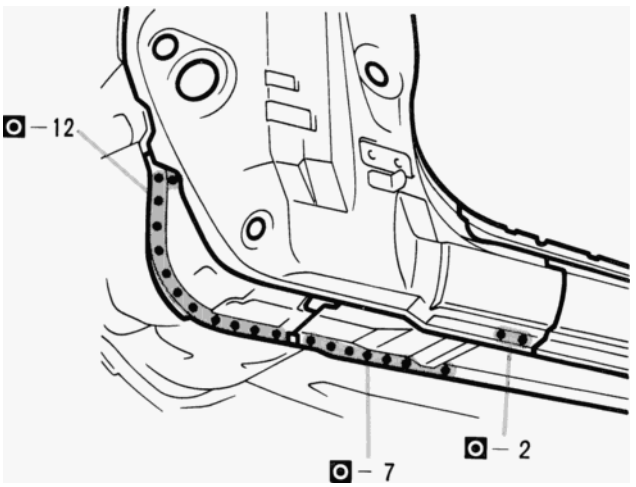

mm	in.
20 60	0.79 2.36

3. Before welding the new parts, check the fit of the front door, front fender and windshield glass.
4. A 60mm (2.36in.) wide access hole should be made in the rocker outer panel. After butt welding the rocker panel reinforcement reattach the rocker outer panel by welding.
5. After installing the new parts, apply foamed material.

HINT: For the formed material application areas, refer to page AP-4 .

FRONT CROSSMEMBER (ASSY)

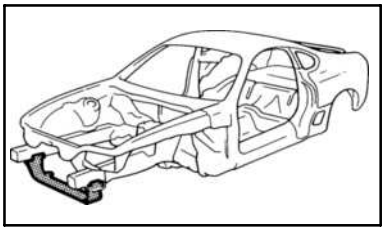

REMOVAL

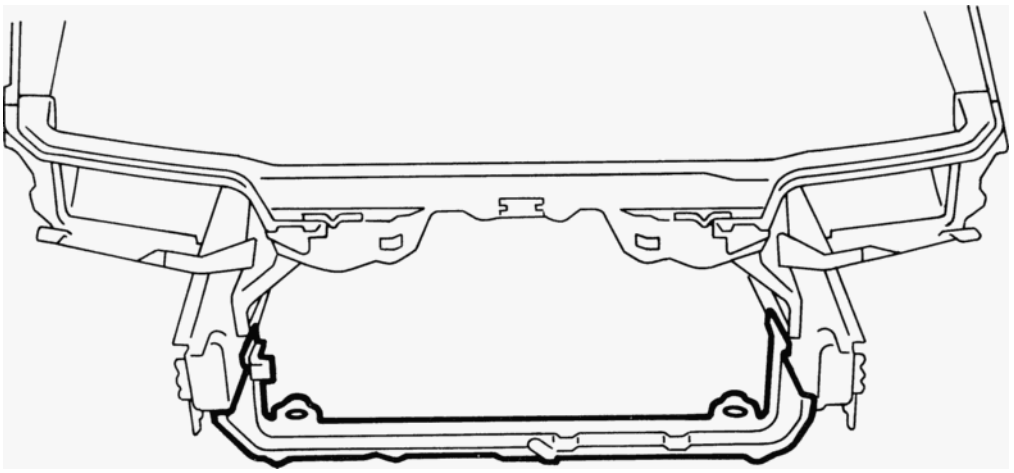

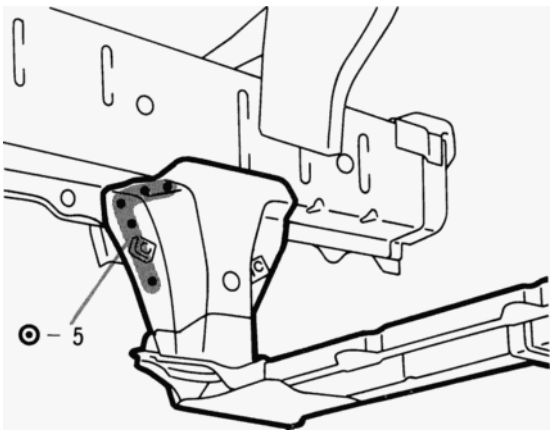

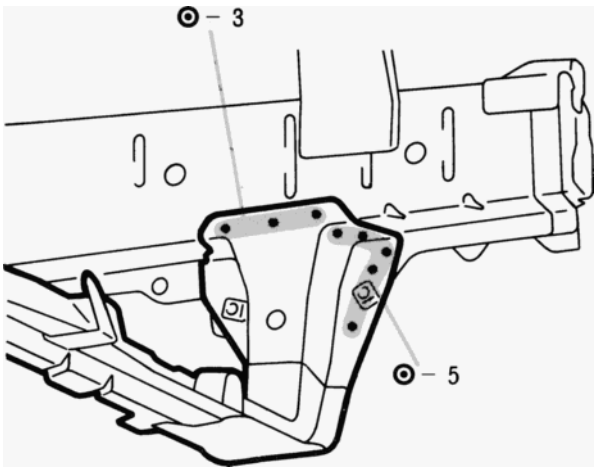

INSTALLATION

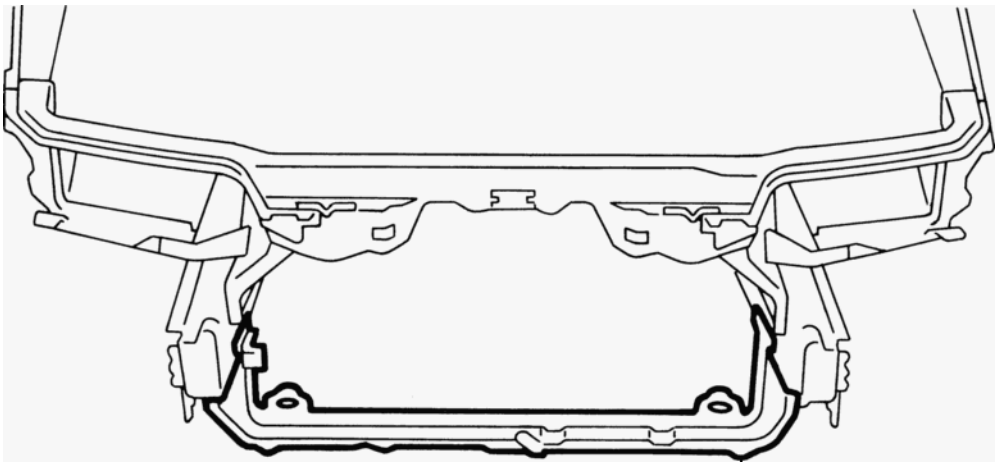

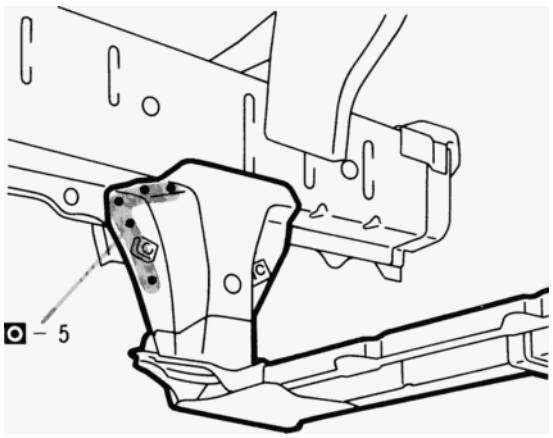

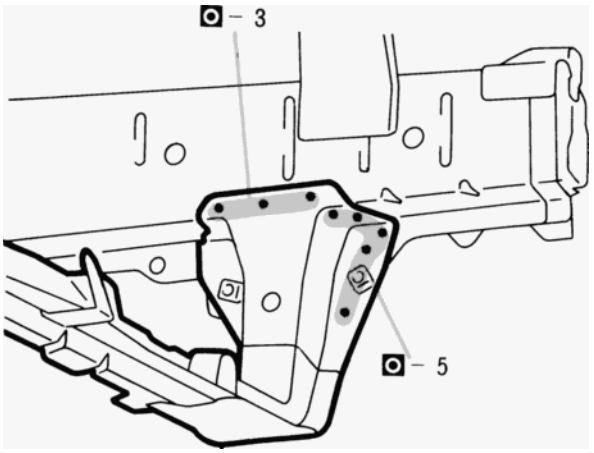

1. Temporarily install the new parts and measure each part in accordance with the body dimension diagram.

FRONT DOOR OUTER PANEL (ASSY)

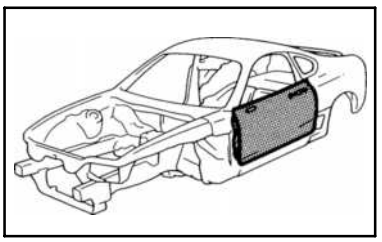

REMOVAL

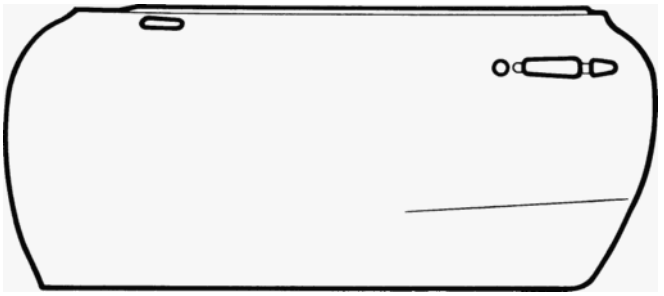

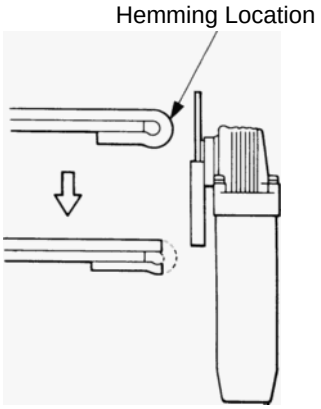

1. After grinding off the hemming location, remove the outer panel.

INSTALLATION

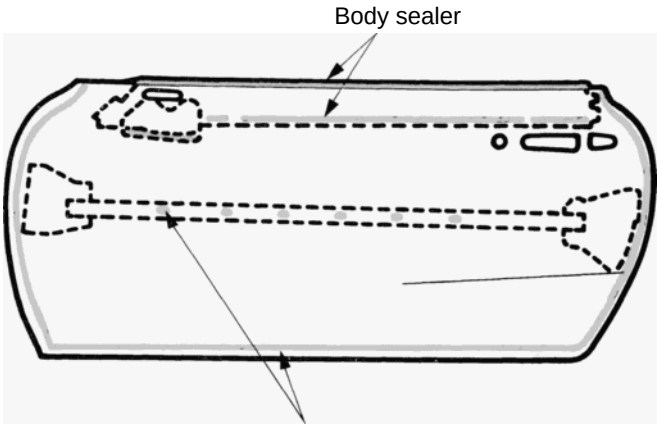

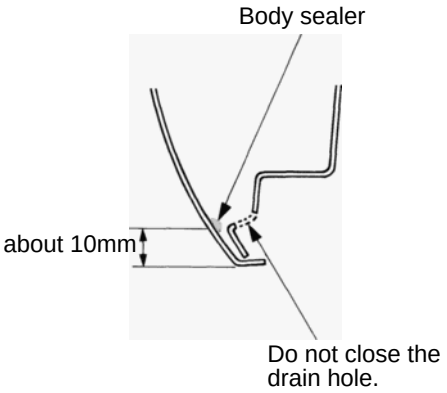

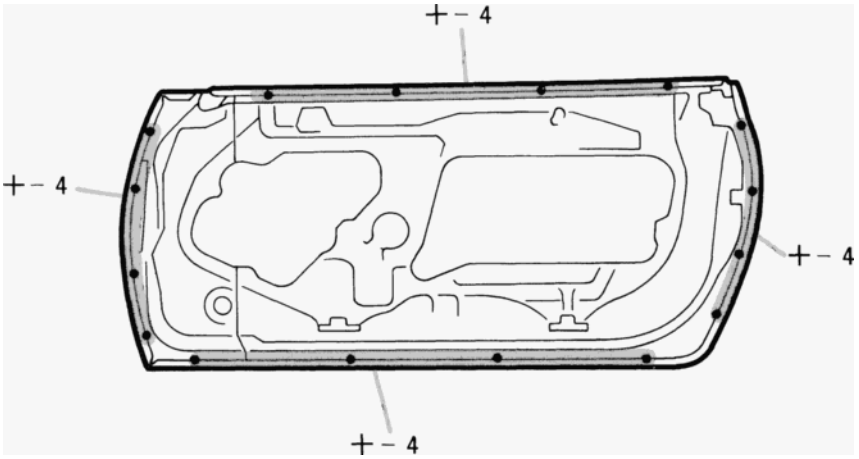

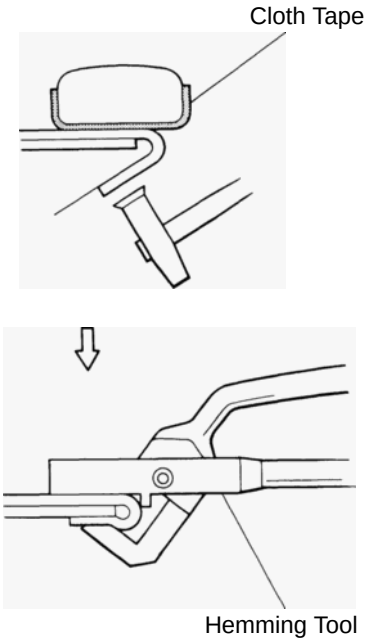

mm	in.
10	0.39

1. Before temporarily installing the new parts, apply body sealer to the reinforcement, side impact protection beam and back side of the new parts.

HINT:

1) Apply just enough sealer for the reinforcement and side impact beam to touch the new panel. Apply sealer evenly around the flange area, about 10 mm (0.39 in.) from the edge, as shown.

2) For other sealing points, refer to section AR.

2. Bend the flange hem about 30˚ with a hammer and dolly, then fasten tightly with a hemming tool.

HINT:

1) Perform hemming in three steps, being careful not to warp the panel.

2) If a hemming tool cannot be used, hem with a hammer and dolly.

FRONT FENDER FRONT APRON (ASSY)

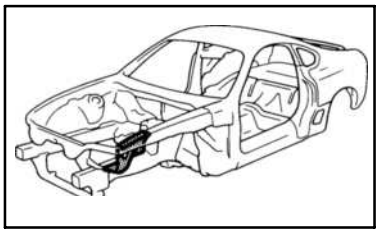

REMOVAL (With the radiator upper support removed.)

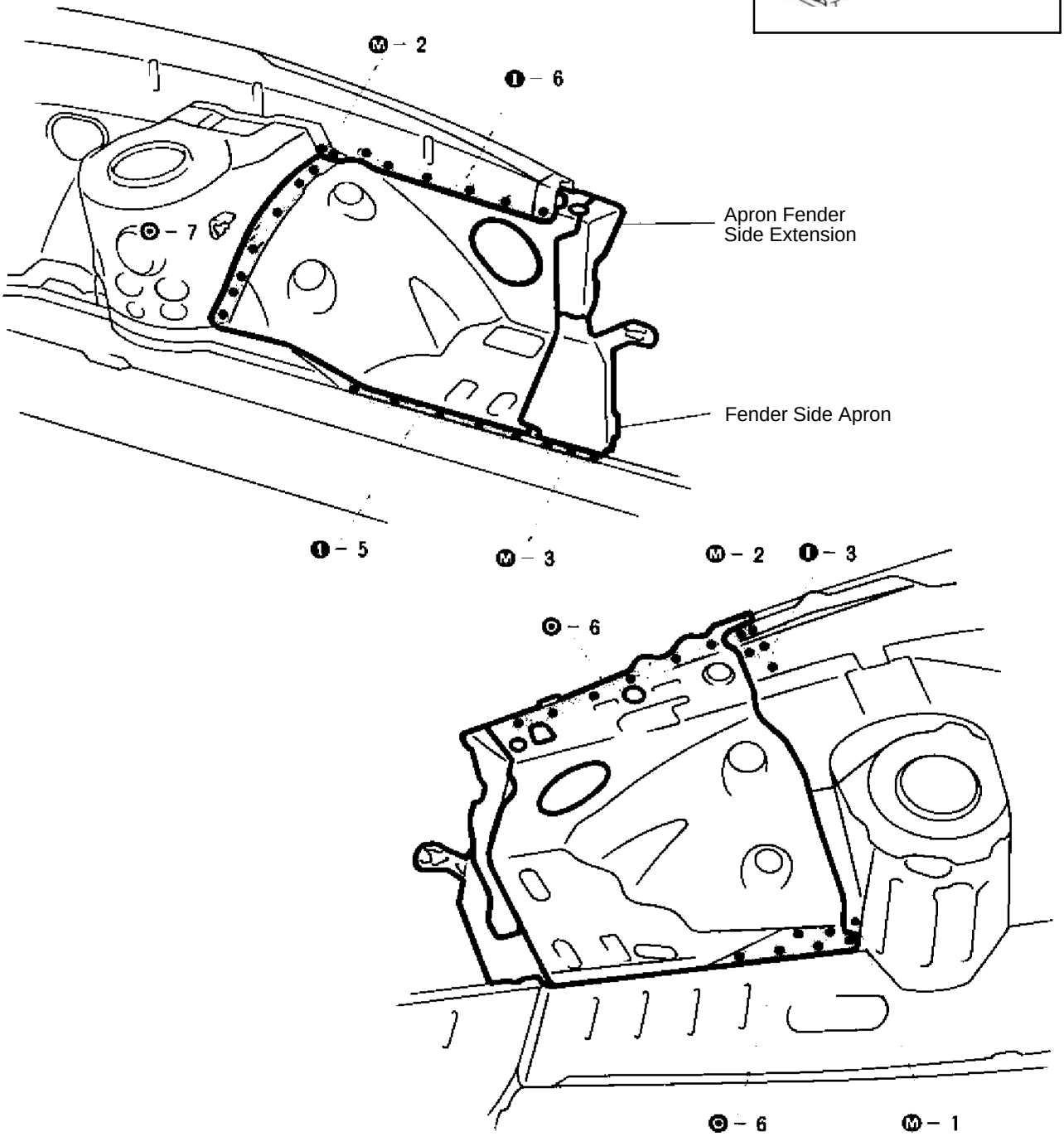

1. Replace the fender side apron and apron fender side extension at the same time.

INSTALLATION

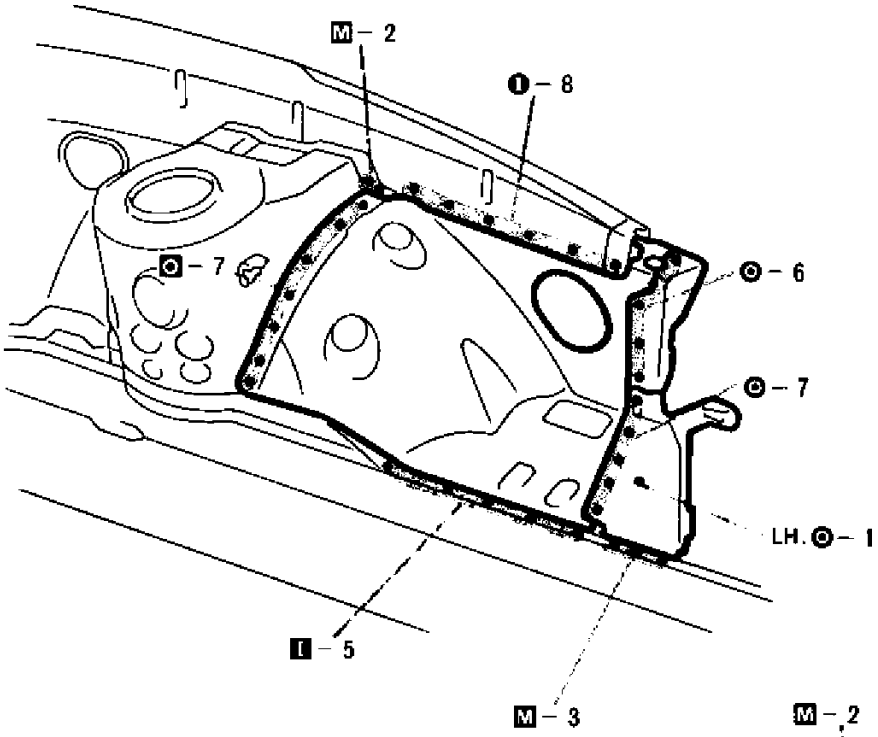

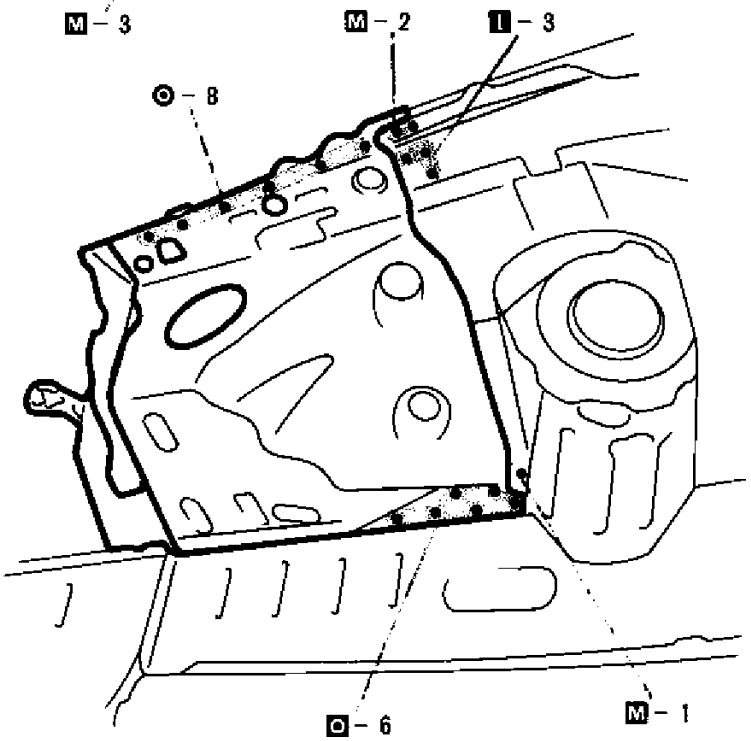

1. Temporarily install the new parts and measure each part in accordance with the body dimension diagram.

FRONT SIDE MEMBER (CUT-P)

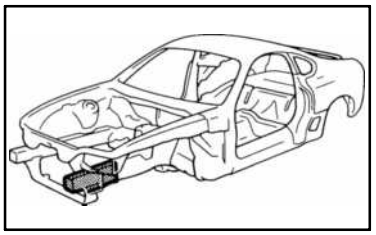

REMOVAL (With the radiator upper support and front crossmember removed.)

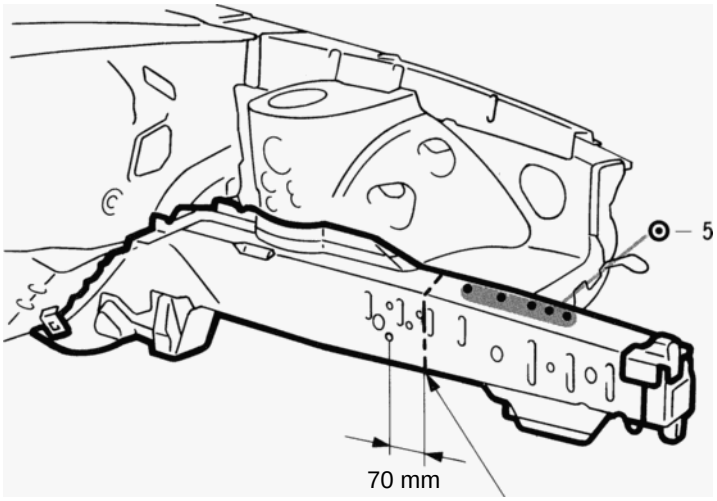

Cut and Join Location
(Inner Member and
Reinforcement)

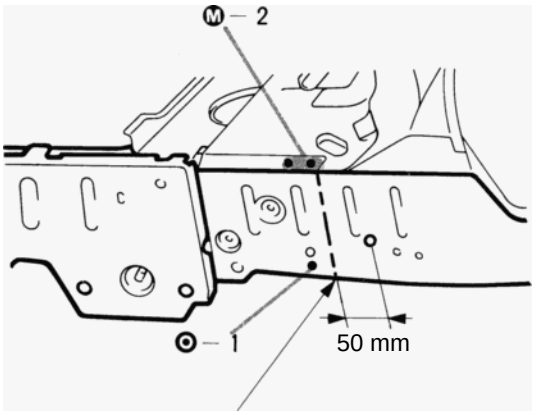

Cut and Join Location
(Outer Plate)

1. Cut and join the parts at the location shown above.

HINT: Shift the cut and join location of the outer plate, inner member and reinforcement.

mm	in.
50	1.97
70	2.76

INSTALLATION

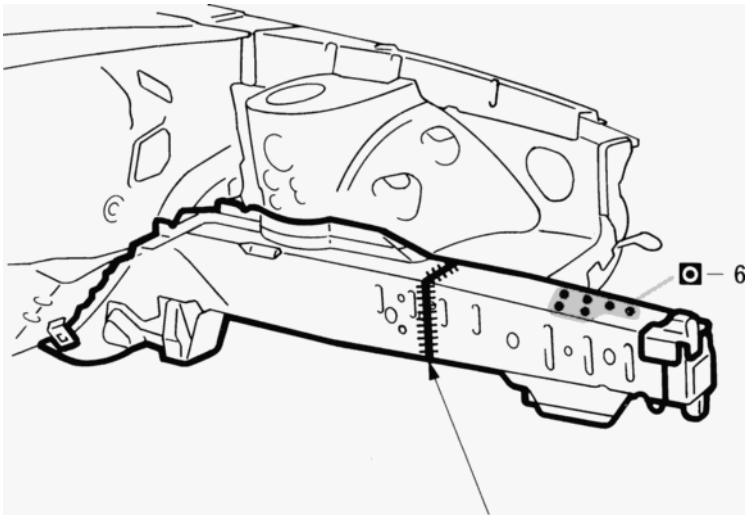

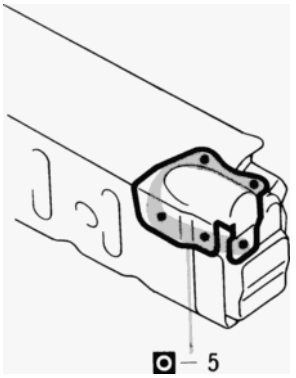

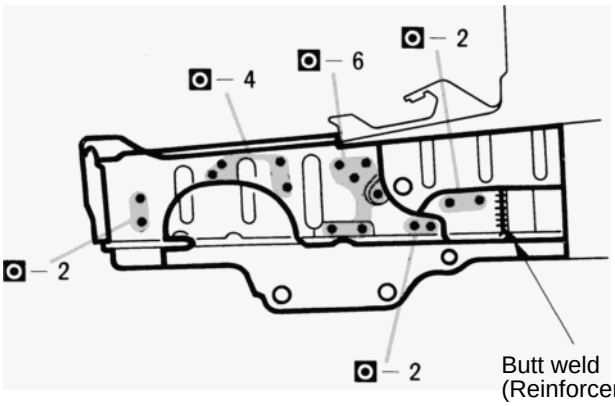

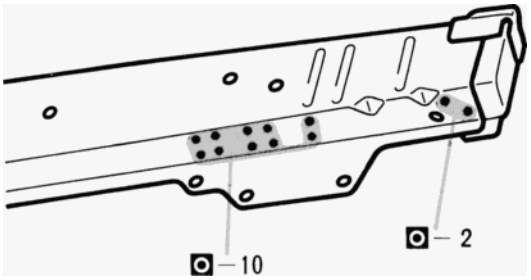

1. Temporarily install the new parts and measure each part in accordance with the body dimension diagram.
2. After butt welding the inner member and reinforcement, install the outer plate.

INSTALLATION (Cont'd)

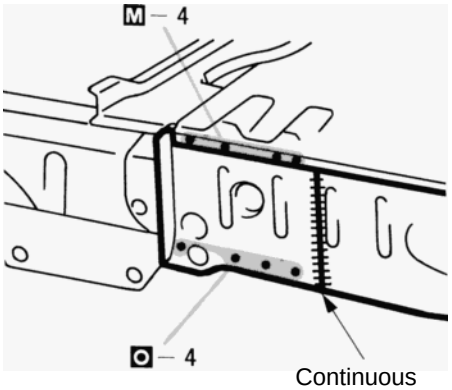

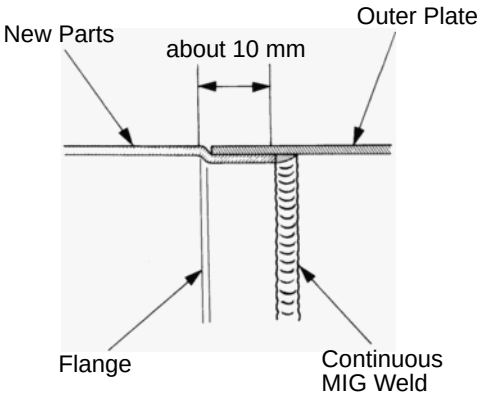

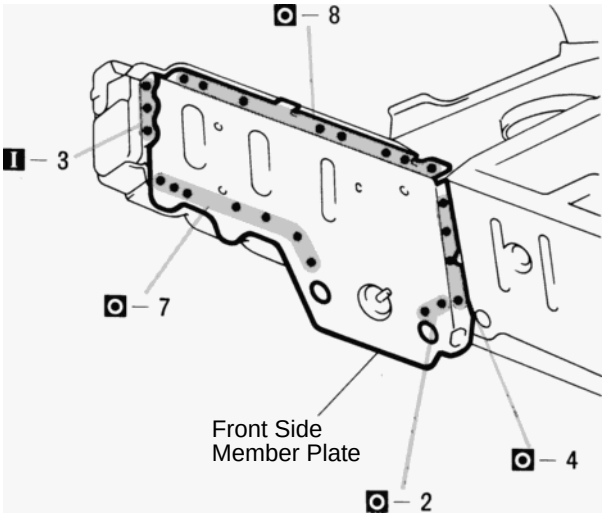

3. Provide a flange of about 10 mm (0.39 in.) on the new outer plate, then overlap it with the vehicle side panel and weld them with a continuous MIG weld to the edge.

mm	in.
10	0.39

FRONT SUSPENSION CROSSMEMBER

(Three-Dimensional Distance)

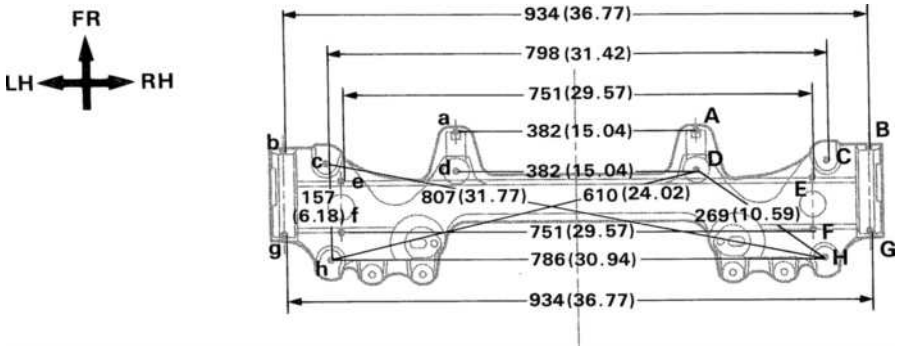

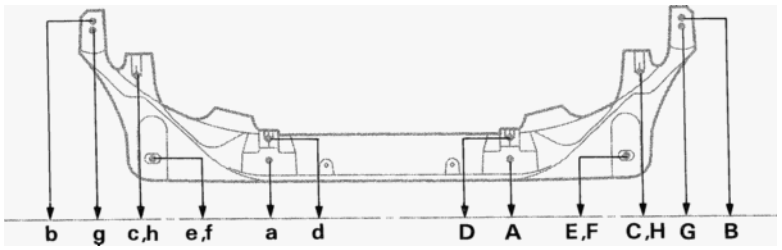

Imaginary Standard Line

(Two-Dimensional Distance)

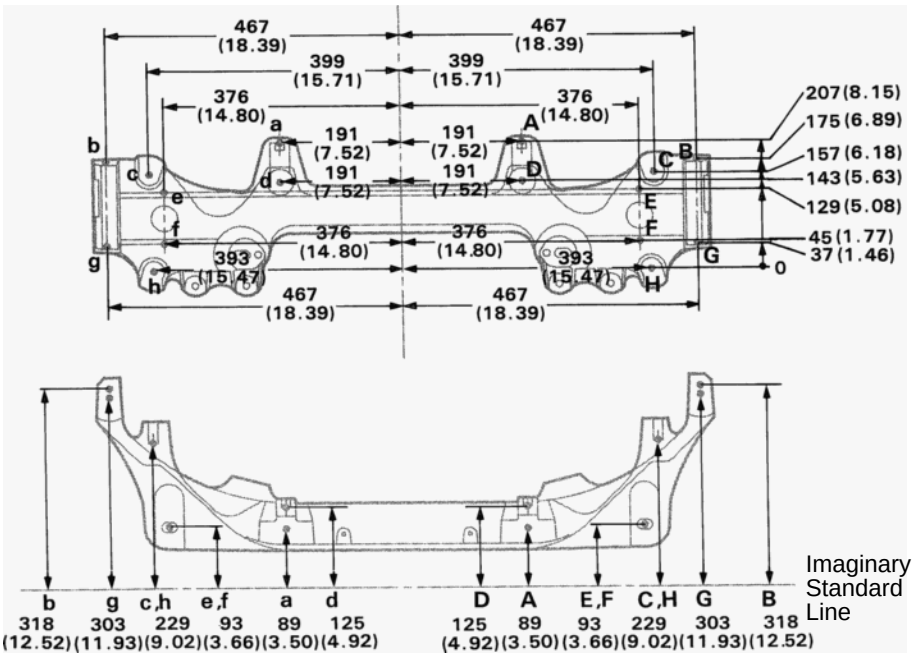

Imaginary Standard Line

BO6850
BO6850

mm (in.)

Symbol	Name	Hole dia.	Symbol	Name	Hole dia.
A, a	Steering gear box installation hole front	12 (0.47)	E, e	Lower arm installation hole-front	25×16 (0.98×0.63)
B, b	Upper arm installation hole front	14 (0.55)	F, f	Lower arm installation hole rear	25×16 (0.98×0.63)
C, c	Suspension crossmember installation hole front-lower	15 (0.59)	G, g	Upper arm installation hole rear	14 (0.55)
D, d	Steering gear box installation hole-lower	12 (0.47)	H, h	Suspension crossmember installation hole rear-lower	RH 15×13 (0.59 x 0.51) LH 13 (0.51)

FRONT SUSPENSION CROSSMEMBER (Cont'd)

(Three-Dimensional Distance)

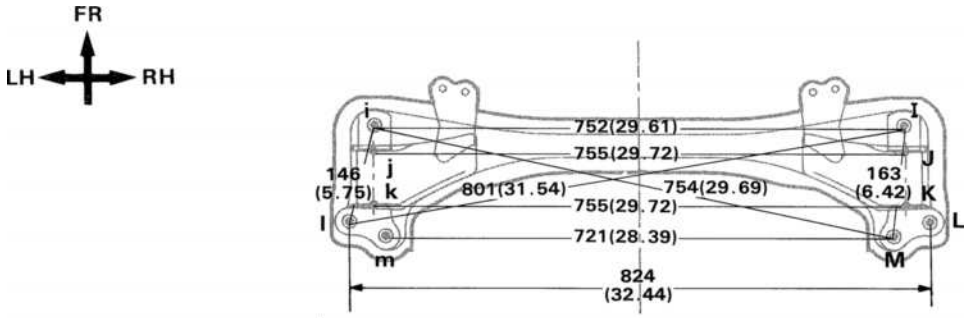

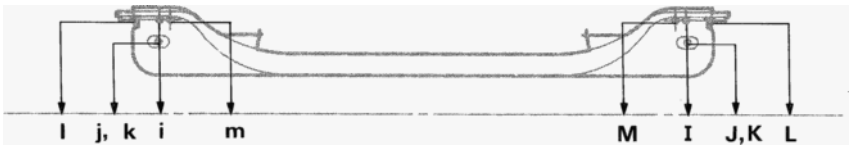

Imaginary Standard Line

(Two-Dimensional Distance)

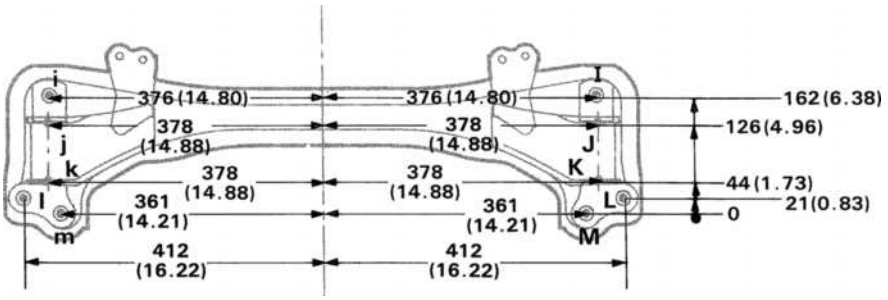

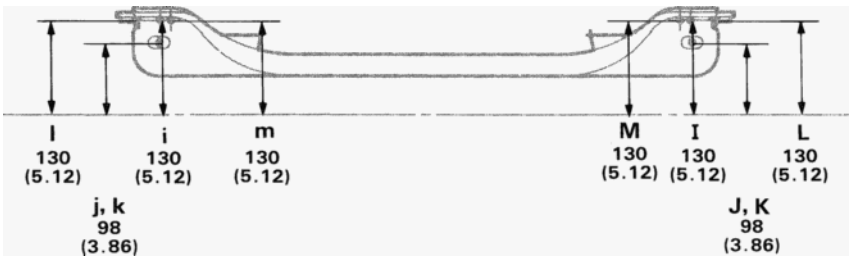

Imaginary Standard Line

BO8851
BO6851

mm (in.)

Symbol	Name	Hole dia.	Symbol	Name	Hole dia.
I, i	Suspension crossmember installation hole front-lower	18 (0.71)	L, l	Suspension crossmember installation hole rear-lower	18 (0.71)
J, j	Lower arm installation hole-front	30×16 (1.18×0.63)	M, m	Suspension crossmember installation hole rear-lower	18 (0.71)
K, k	Lower arm installation hole rear	30×16 (1.18 x 0.63)	—	—	—

GENERAL INFORMATION

Anti-rust treatment is necessary before welding and before and after the painting process.

ANTI-RUST TREATMENT BEFORE WELDING

1. **WELD-THROUGH PRIMER (SPOT SEALER) APPLICATION**
   For anti-corrosion measures, always apply the weld-through primer (spot sealer) to welding surfaces where the paint film has been removed.
   HINT: Apply the weld-through primer (spot sealer) to that it does not ooze out from the joining surfaces.

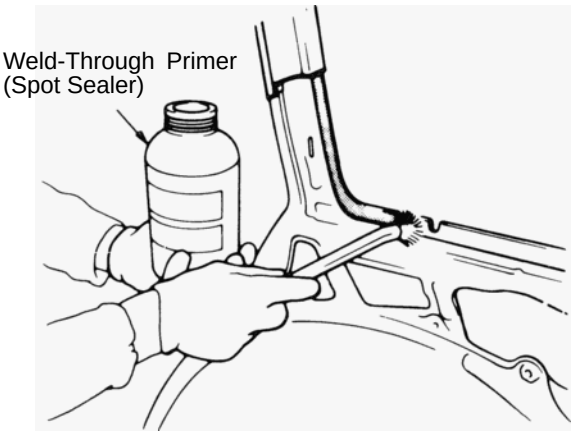

WELD-THROUGH PRIMER (SPOT SEALER) APPLICATION

ANTI-RUST TREATMENT BEFORE PAINTING PROCESS

1. **BODY SEALER APPLICATION**
   For water-proofing and anti-corrosion measures, always apply the body sealer to the body panel seams and hems of the doors, etc.

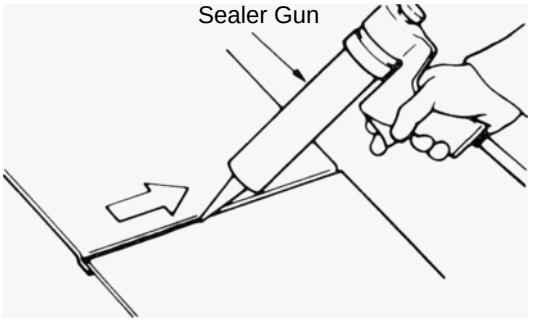

BODY SEALER APPLICATION

2. **UNDERCOAT APPLICATION**
   To prevent corrosion and protect the body from damage by flying stones, always apply sufficient undercoat to the bottom surface of the under body and inside of the wheel housings.

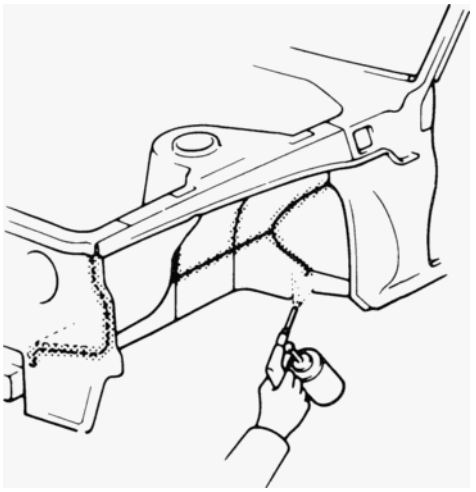

UNDERCOAT APPLICATION

ANTI-RUST TREATMENT AFTER PAINTING PROCESS

1. ANTI-RUST AGENT (WAX) APPLICATION

To preserve impossible to paint areas from corrosion, always apply sufficient anti-rust agent (wax) to the inside of the hemming areas of the doors and hoods, and around the hinges, or the welded surfaces inside the boxed cross-section structure of the side member, body pillar, etc.

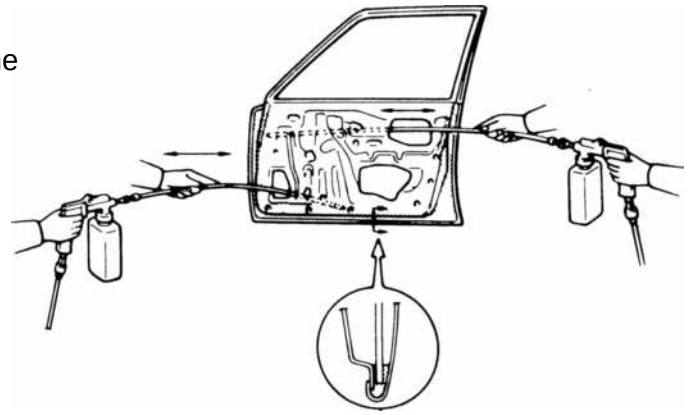

ANTI-RUST AGENT (WAX) APPLICATION

REFERENCE: ANTI-RUST TREATMENT BY PAINTING

Painting prevents corrosion and protects the sheet metal from damage. In this section, anti-chipping paint only for anti-corrosion purpose is described.

1. ANTI-CHIPPING PAINT

To prevent corrosion and protect the body from damage by flying stones, etc., apply anti-chipping paint to the rocker panel, wheel arch areas, valance panel, etc.

HINT:

Depending on the model or the application area, there are cases where the application of anti-chipping paint is necessary before the second coat or after the top coat.

- Apply the anti-chipping paint after the top coat.

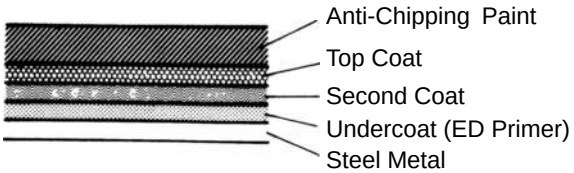

- Apply the anti-chipping paint before the second coat.

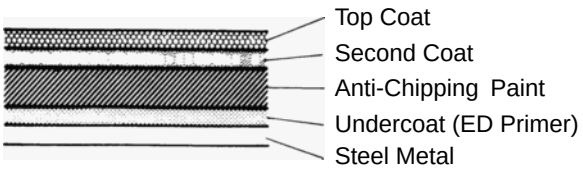

GENERAL INFORMATION

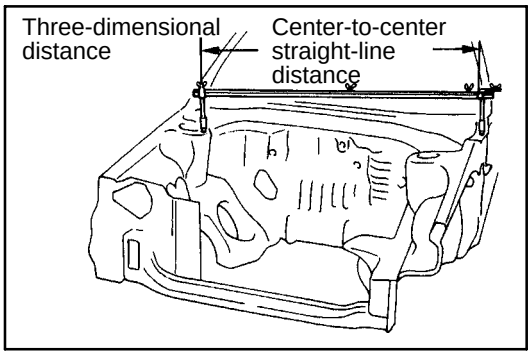

1. BASIC DIMENSIONS

(a) There are two types of dimensions in the diagram.
(Three-dimensional distance)

- Straight-line distance between the centers of two measuring points.

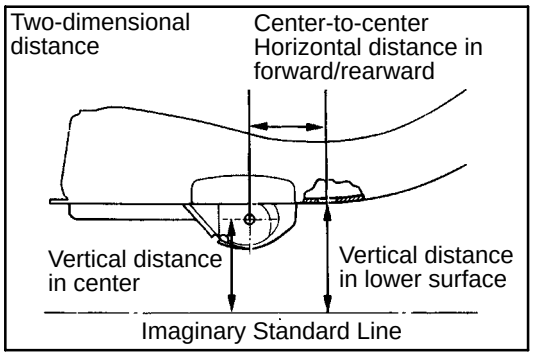

(Two-dimensional distance)

- Horizontal distance in forward/rearward between the centers of two measuring points.
- The height from an imaginary standard line.

(b) In cases in which only one dimension is given, left and right are symmetrical.

(c) The dimensions in the following drawing indicate actual distance. Therefore, please use the dimensions as a reference.

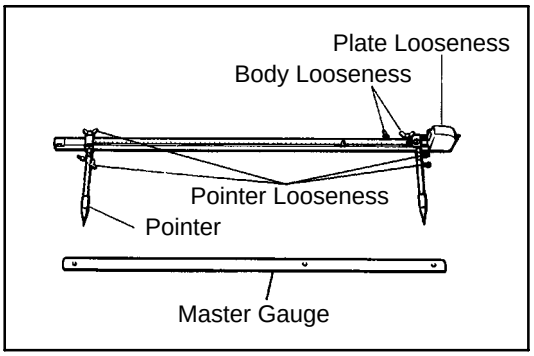

2. MEASURING

(a) Basically, all measurements are to be done with a tracking gauge. For portions where it is not possible to use a tracking gauge, a tape measure should be used.

(b) Use only a tracking gauge that has no looseness in the body, measuring plate, or pointers.

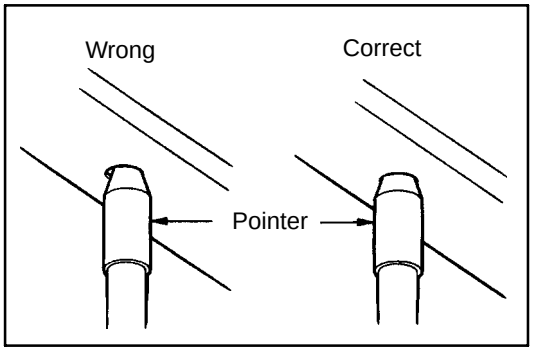

HINT:

1. *The height of the left and right pointers must be equal.*
2. *Always calibrate the tracking gauge before measuring or after adjusting the pointer height.*
3. *Take care not to drop the tracking gauge or otherwise shock it.*
4. *Confirm that the pointers are securely in the holes.*

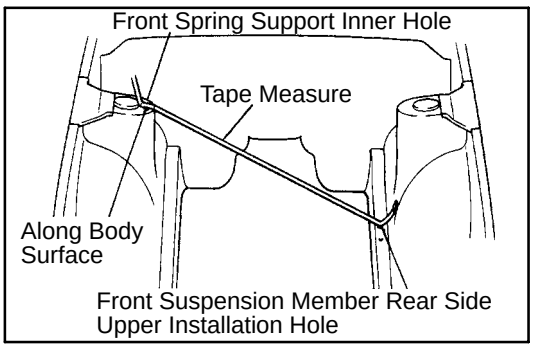

(c) When using a tape measure, avoid twists and bends in the tape.

(d) When tracking a diagonal measurement from the front spring support inner hole to the suspension member upper rear installation hole, measure along the front spring support panel surface.

HANDLING PRECAUTIONS

1. The repair procedure for plastic body parts must conform with the type of plastic material.
2. Plastic body parts are identified by the codes in the following chart.
3. When repairing metal body parts adjoining plastic body parts (by brazing, frame cutting, welding, painting etc.), consideration must given to the property of the plastic.

Code	Material name	Heat* resistant temperature limit °C (°F)	Resistance to alcohol or gasoline	Notes
AAS	Acrylonitrile Acrylic Styrene	80 (176)	Alcohol is harmless if applied only for short time in small amounts (e.g., quick wiping to remove grease).	Avoid gasoline and organic or aromatic solvents.
ABS	Acrylonitrile Butadiene Styrene	80 (176)	Alcohol is harmless if applied only for short time in small amounts (e.g., quick wiping to remove grease).	Avoid gasoline and organic or aromatic solvents.
AES	Acrylonitrile Ethylene Styrene	80 (176)	Alcohol is harmless if applied only for short time in small amounts (e.g., quick wiping to remove grease).	Avoid gasoline and organic or aromatic solvents.
BMC	Bulk Moulding Compound	150 (302)	Alcohol and gasoline are harmless.	Most solvents are harmless.
CAB	Cellulose Acetate	80 (176)	Alcohol is harmless if applied only for short time in small amounts (e.g., quick wiping to remove grease).	Avoid gasoline and organic or aromatic solvents.
EPDM	Ethylene Propylene	100 (212)	Alcohol is harmless. Gasoline is harmless if applied only for short time in small amounts.	Most solvents are harmless but avoid dipping in gasoline, solvents, etc.
PA	Polyamide (Nylon)	80 (176)	Alcohol and gasoline are harmless.	Avoid battery acid.
PBT	Polybutylene Terephthalate	160 (320)	Alcohol and gasoline are harmless.	Most solvents are harmless.
PC	Polycarbonate	120 (248)	Alcohol is harmless.	Avoid gasoline, brake fluid, wax, wax removers and organic solvents. Avoid alkali.
PE	Polyethylene	80 (176)	Alcohol and gasoline are harmless.	Most solvents are harmless.
PET	Polyethylene Terephthalate	75 (176)	Alcohol and gasoline are harmless.	Avoid dipping in water.

* Temperatures higher than those listed here may result in material deformation during repair.

Code	Material name	Heat* resistant temperature limit °C (°F)	Resistance to alcohol or gasoline	Notes
PMMA	Polymethyl Methacrylate	80 (176)	Alcohol is harmless if applied only for short time in small amounts.	Avoid dipping or immersing in alcohol, gasoline, solvents, etc.
POM	Polyoxymethylene (Polyacetal)	100 (212)	Alcohol and gasoline are harmless.	Most solvents are harmless.
PP	Polypropylene	80 (176)	Alcohol and gasoline are harmless.	Most solvents are harmless.
PPO	Modified Polyphenylene Oxide	100 (212)	Alcohol is harmless.	Gasoline is harmless if applied only for quick wiping to remove grease.
PS	Polystyrene	60 (140)	Alcohol and gasoline are harmless if applied only for short time in small amounts.	Avoid dipping or immersing in alcohol, gasoline, solvents, etc.
PUR	Polyurethane	80 (176)	Alcohol is harmless if applied only for very short time in small amounts (e.g., quick wiping to remove grease).	Avoid dipping or immersing in alcohol, gasoline, solvents, etc.
PVC	Polyvinylchloride (Vinyl)	80 (176)	Alcohol and gasoline are harmless if applied only for short time in small amounts (e.g., quick wiping to remove grease).	Avoid dipping or immersing in alcohol, gasoline, solvents, etc.
SAN	Styrene Acrylonitrile	80 (176)	Alcohol is harmless if applied only for short time in small amounts (e.g., quick wiping to remove grease).	Avoid dipping or immersing in alcohol, gasoline, solvents, etc.
SMC	Sheet Moulding Compound	180 (356)	Alcohol and gasoline are harmless.	Avoid alkali.
TPO	Thermoplastic Olefine	80 (176)	Alcohol is harmless. Gasoline is harmless if applied only for short tune in small amounts.	Most solvents are harmless but avoid dipping in gasoline, solvents, etc.
TPU	Thermoplastic Polyurethane	80 (176)	Alcohol is harmless if applied only for very short time in small amounts (e.g., quick wiping to remove grease).	Avoid dipping or immersing in alcohol, gasoline, solvents, etc.
TSOP	TOYOTA Supper Olefine Polymer	80 (176)	Alcohol and gasoline are harmless.	Most solvents are harmless.
UP	Unsaturated Polyester	110 (233)	Alcohol and gasoline are harmless.	Avoid alkali.

* Temperatures higher than those listed here may result in material deformation during repair.

HIGH-STRENGTH STEEL (HSS) PARTS

Generally, High-Strength Steel (HSS) is that which has an intensity value of at 35 kgf/mm^2 (343 MPa), and distinguished from mild steel.

The handling of HSS is the same as for mild steel, but the following should be observed.

1. Panel Hammering: Because HSS is thinner than mild steel, care should be taken to avoid warping during hammering operations.
2. Removing Spot Welds: Because HSS is tougher than mild steel, damage will occur more easily to a regular drill. Therefore, an HSS Spot Cutter is recommended.
   Also, use a high-torque drill at low speed, and supply grinding oil to the drill during use.
3. Panel Welding: Panel welding procedures for HSS are exactly the same as for mild steel. Plug welding should be done with MIG (Metal Inert Gas) welder. Do not gas weld or braze panels at areas other than specified.

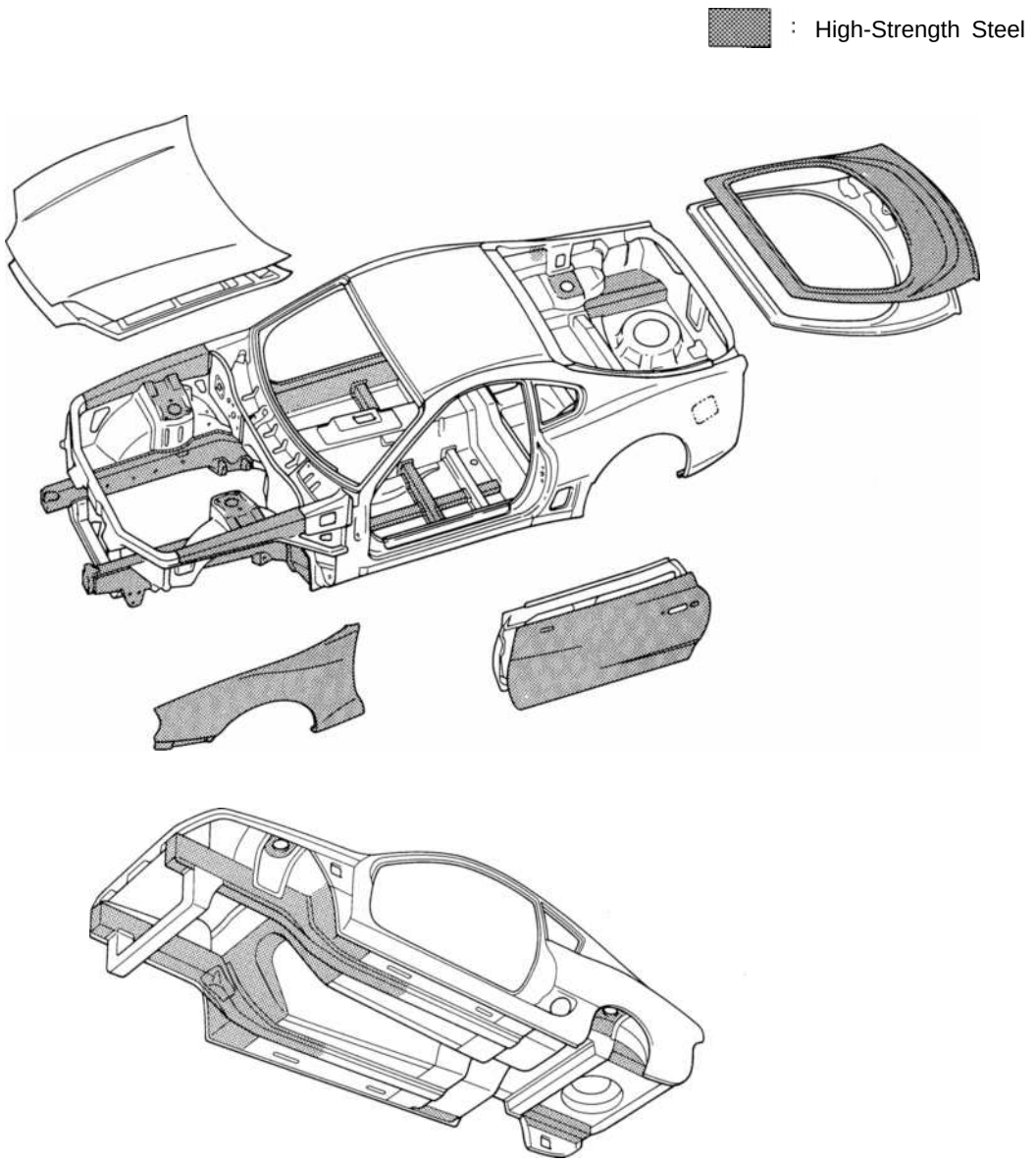

LOCATION OF PLASTIC BODY PARTS

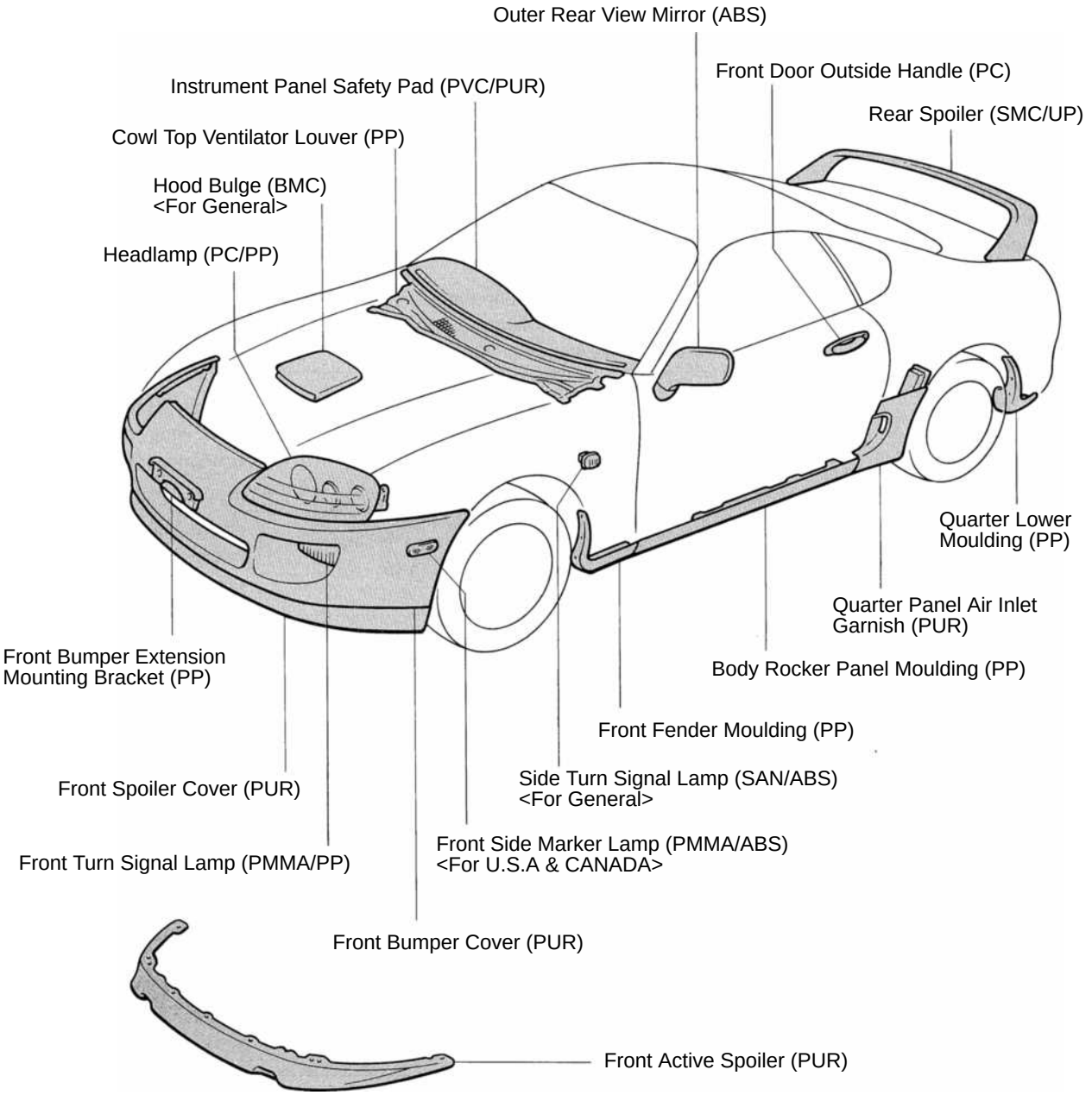

HINT:
- *Resin material differs with model.*
/ *Made up of 2 or more kinds of materials.*

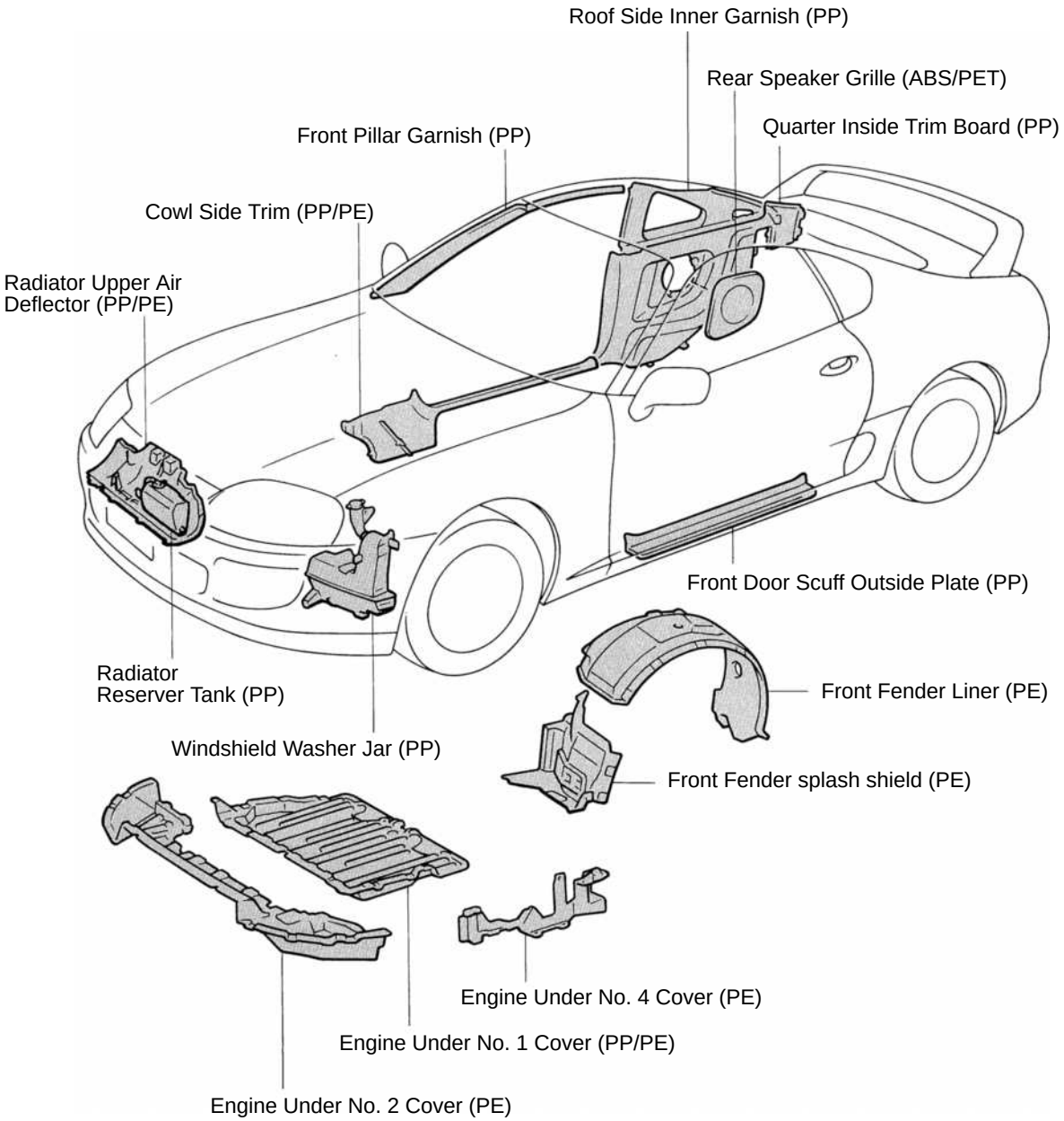

HINT:

- *Resin material differs with model.*

/ *Made up of 2 or more kinds of materials.*

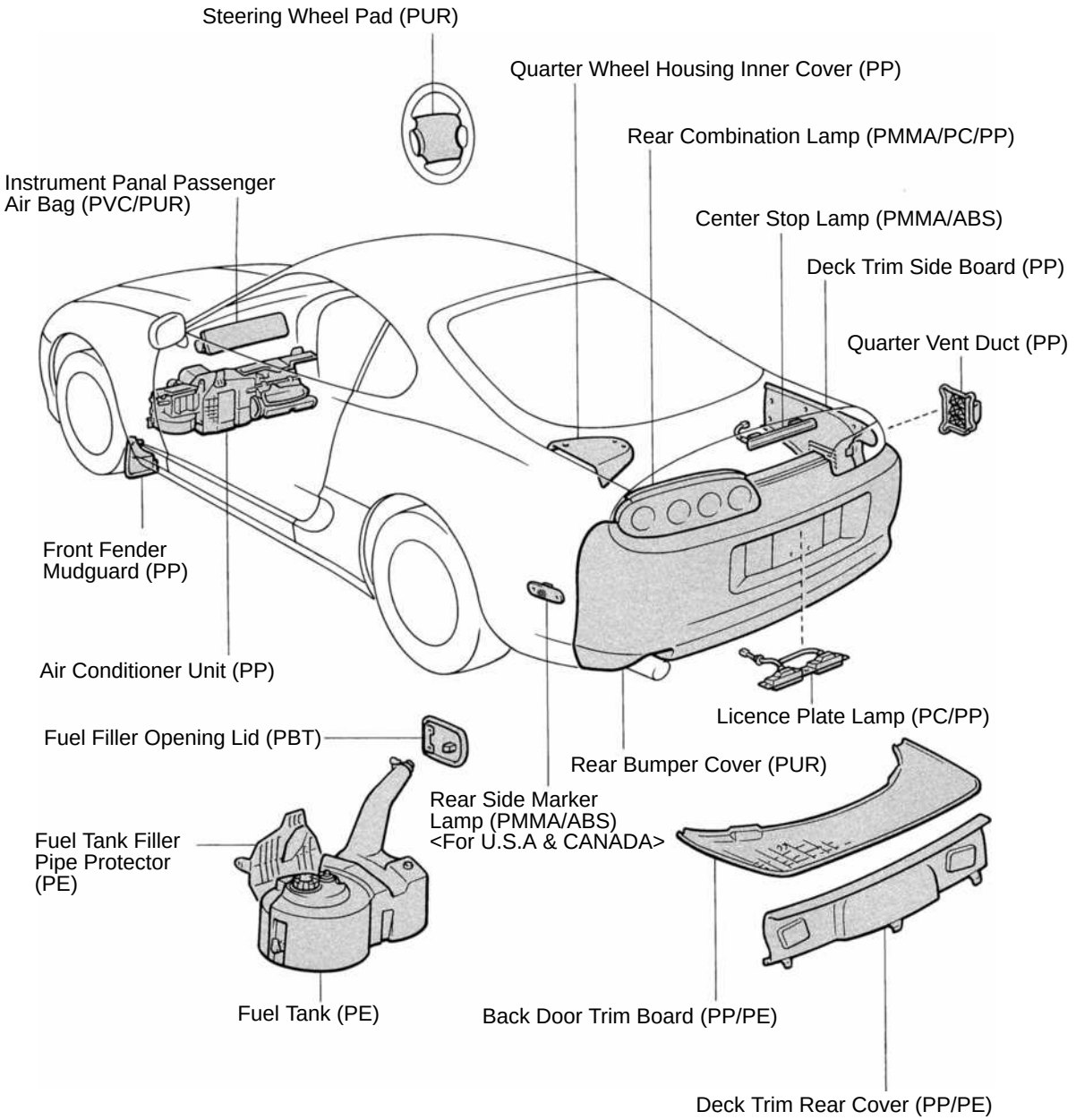

HINT:

- *Resin material differs with model.*

/ *Made up of 2 or more kinds of materials.*

QUARTER PANEL (CUT-P)

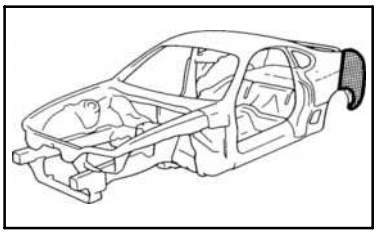

REMOVAL

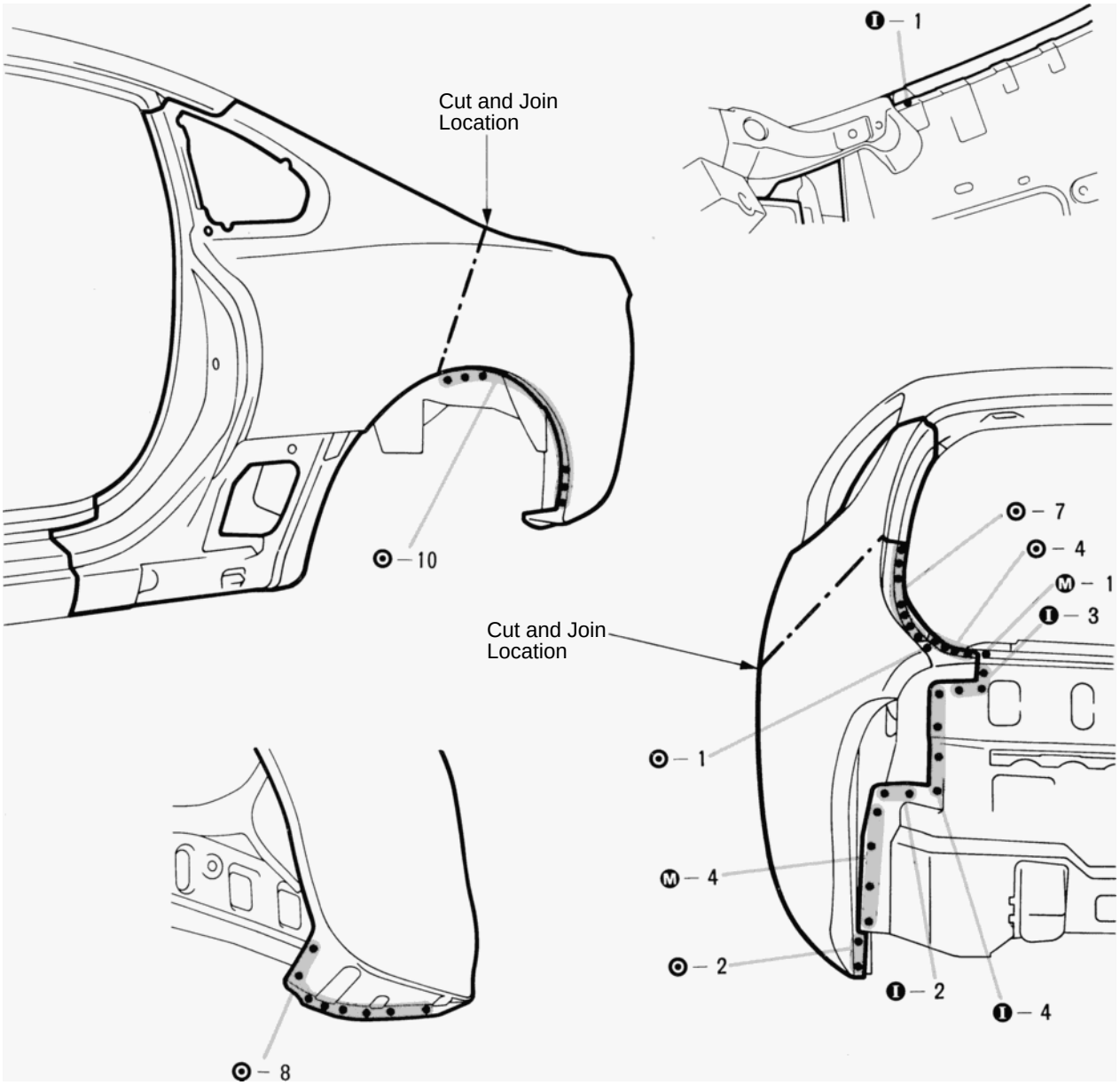

1. Cut and join the parts at the location shown above.

INSTALLATION

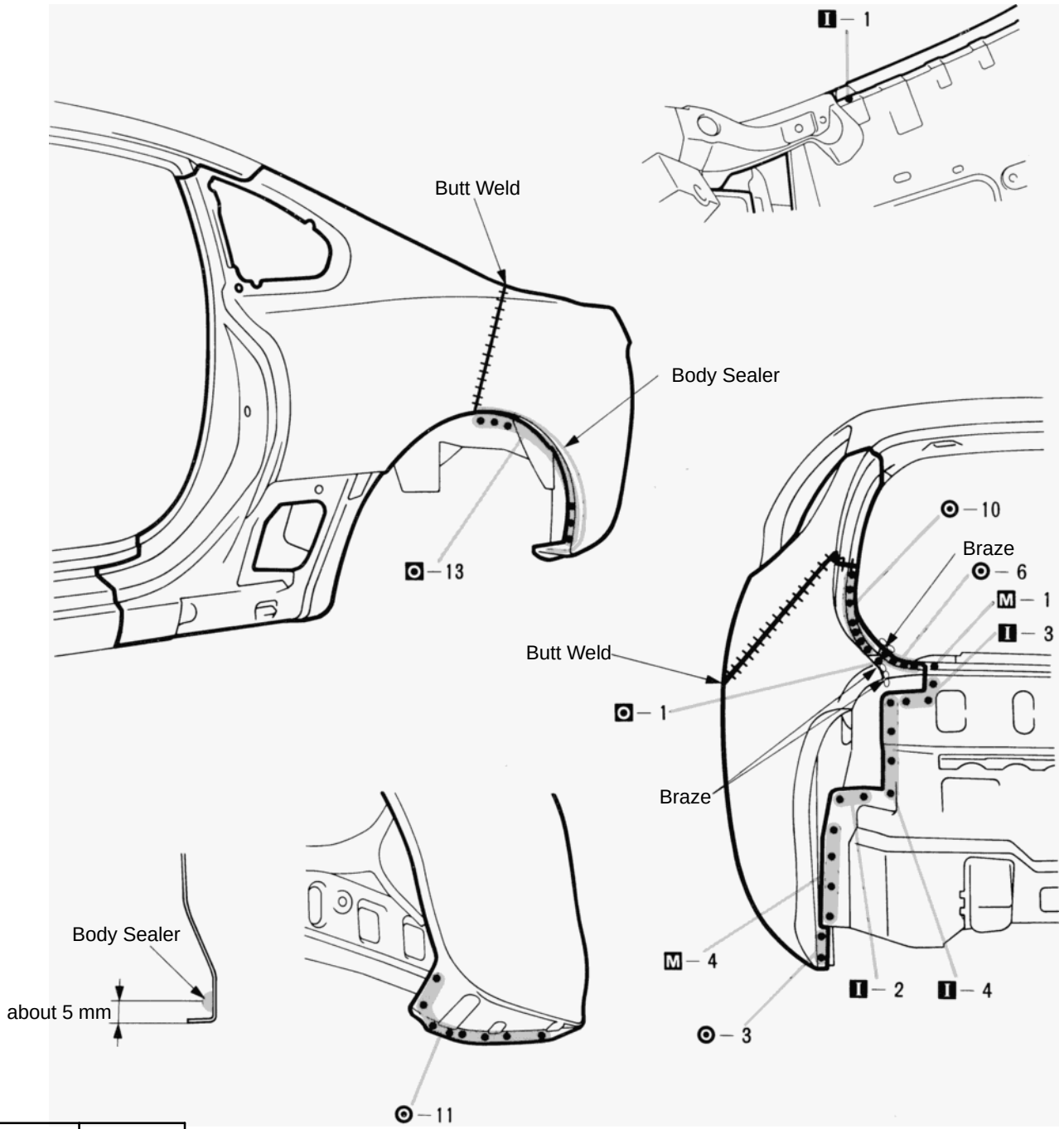

mm	in.
5	0.20

1. Before temporarily installing the new parts, apply body sealer to the wheel arch.

HINT:

1) Apply body sealer about 5 mm (0.20 in.) from the flange, avoiding any oozing.

2) Apply sealer evenly, about 3 - 4 mm (0.12 - 0.16 in.) diameter.

3) For other sealing points, refer to section AR.

2. Temporarily install the new parts and check the fit of the back door and rear combination lamp.

3. Before welding, cut the lining away from the weld seams a little.

QUARTER WHEEL HOUSING OUTER PANEL (ASSY): Normal Roof Left Side

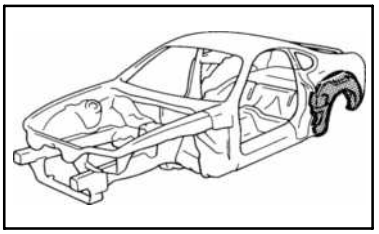

REMOVAL (With the quarter panel removed.)

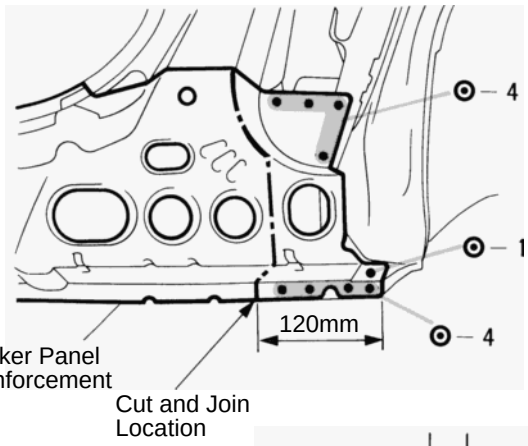

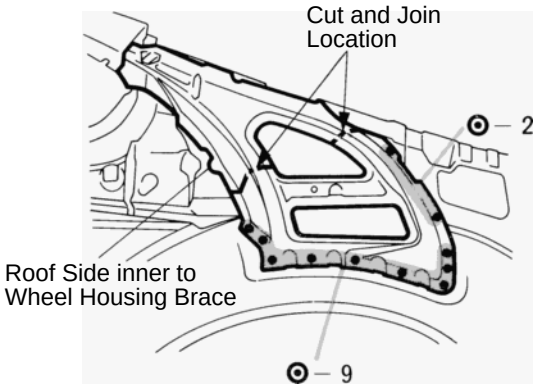

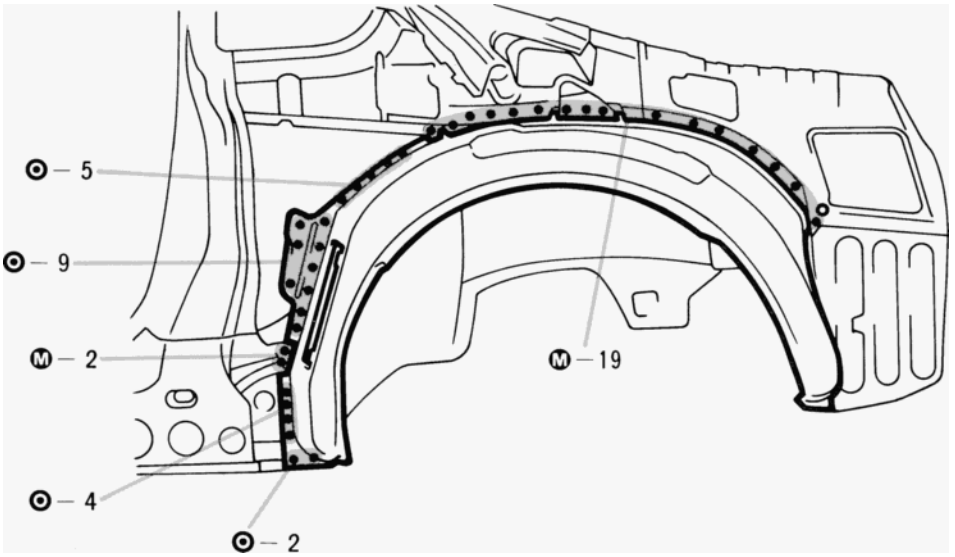

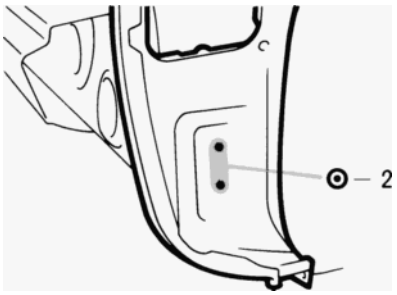

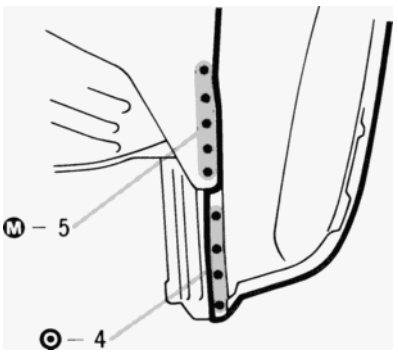

1. Cut the roof side inner to wheel housing brace and the rocker panel reinforcement end at locations shown above. Remove the quarter wheel housing outer panel.

mm	in.
120	4.72

INSTALLATION

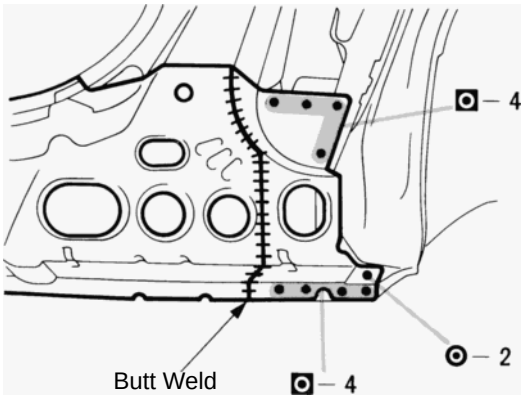

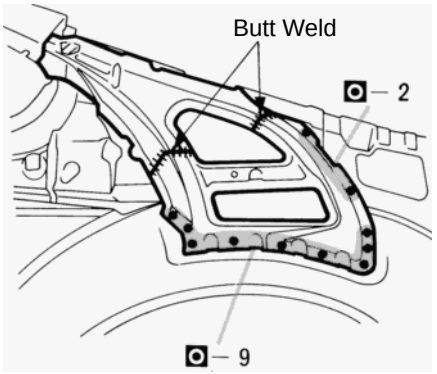

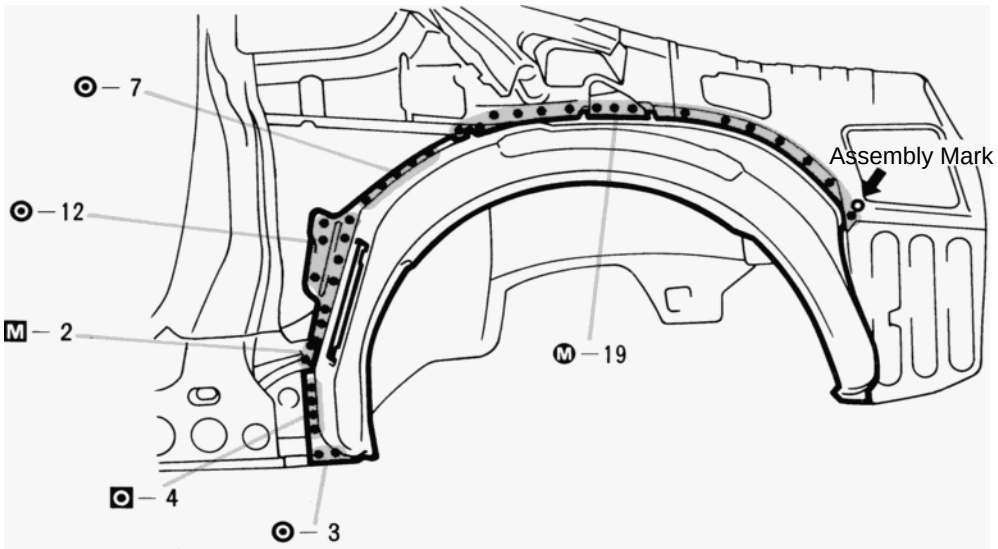

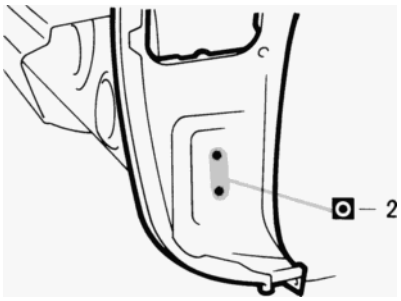

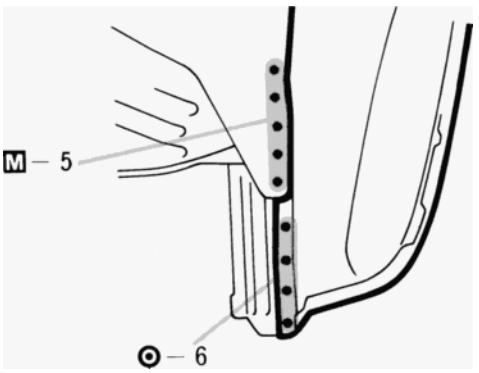

1. Determine the position of the new parts by the assembly marks of the inner and outer panels.

QUARTER WHEEL HOUSING OUTER PANEL (ASSY): Sport Roof Right Side

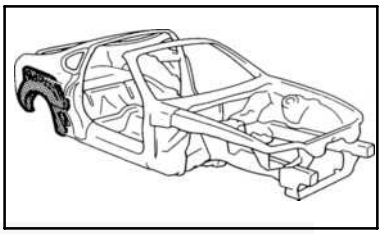

REMOVAL (With the quarter panel removed.)

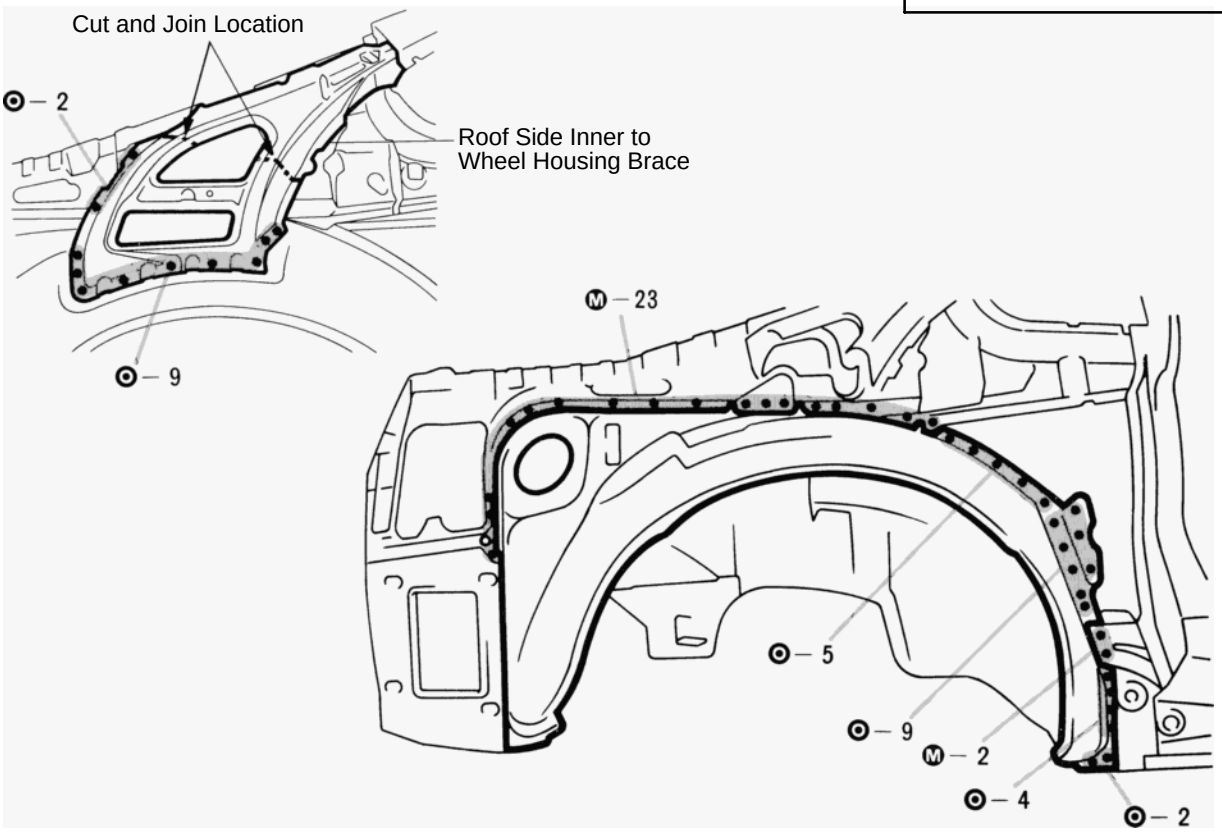

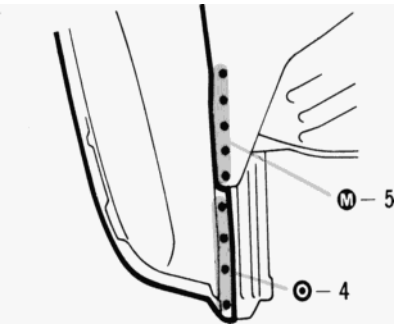

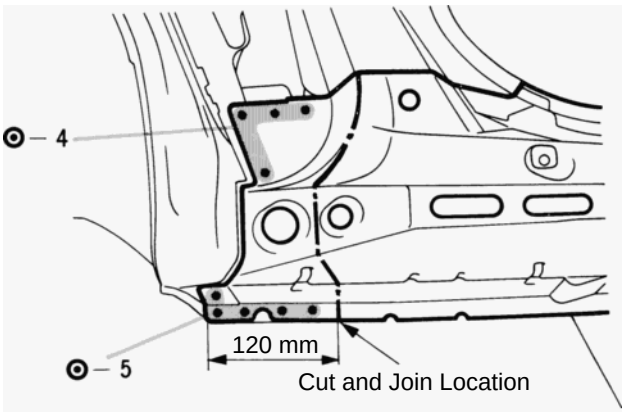

1. Cut the roof side inner to wheel housing brace and the rocker panel reinforcement end at the locations shown above. Remove the quarter wheel housing outer panel.

mm	in.
120	4.72

INSTALLATION

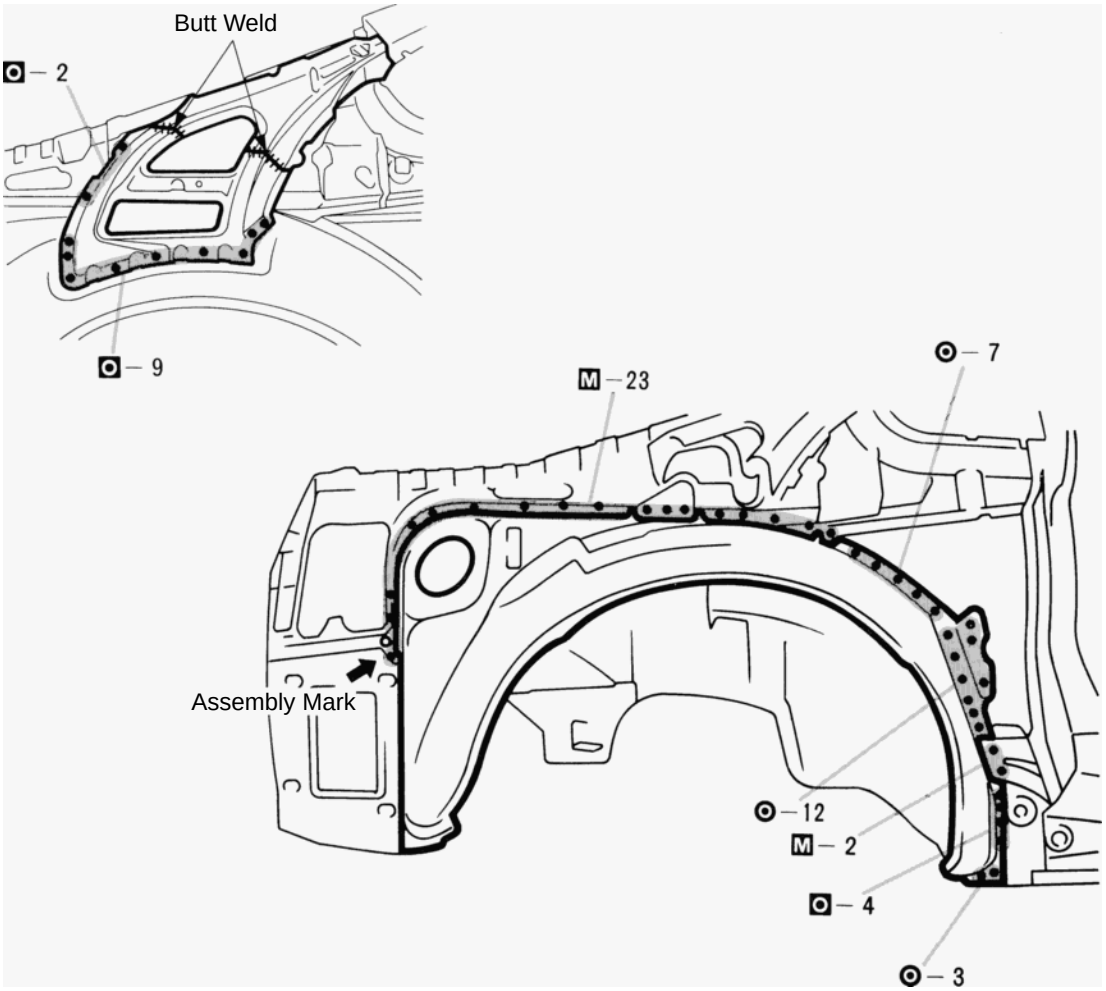

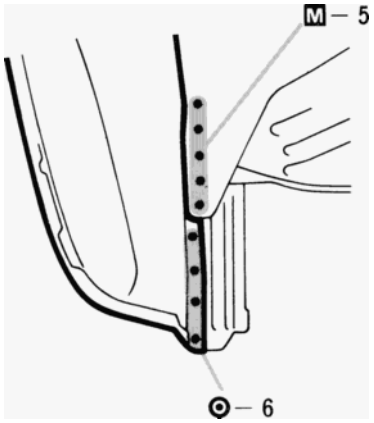

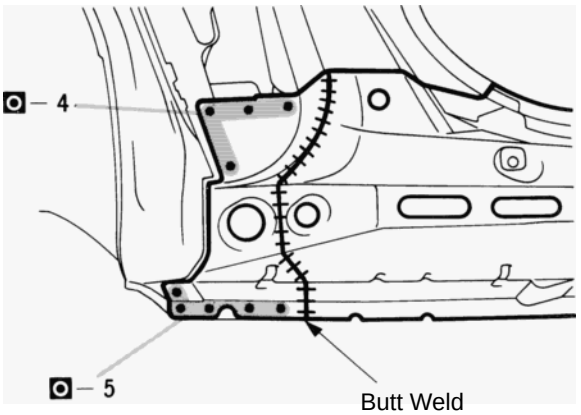

1. Determine the position of the new parts by the assembly marks of the inner and outer panels.

QUARTER WHEEL HOUSING OUTER PANEL (ASSY): Sport Roof Left Side

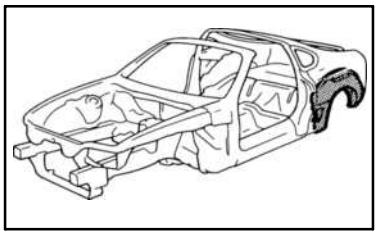

REMOVAL (With the quarter panel removed.)

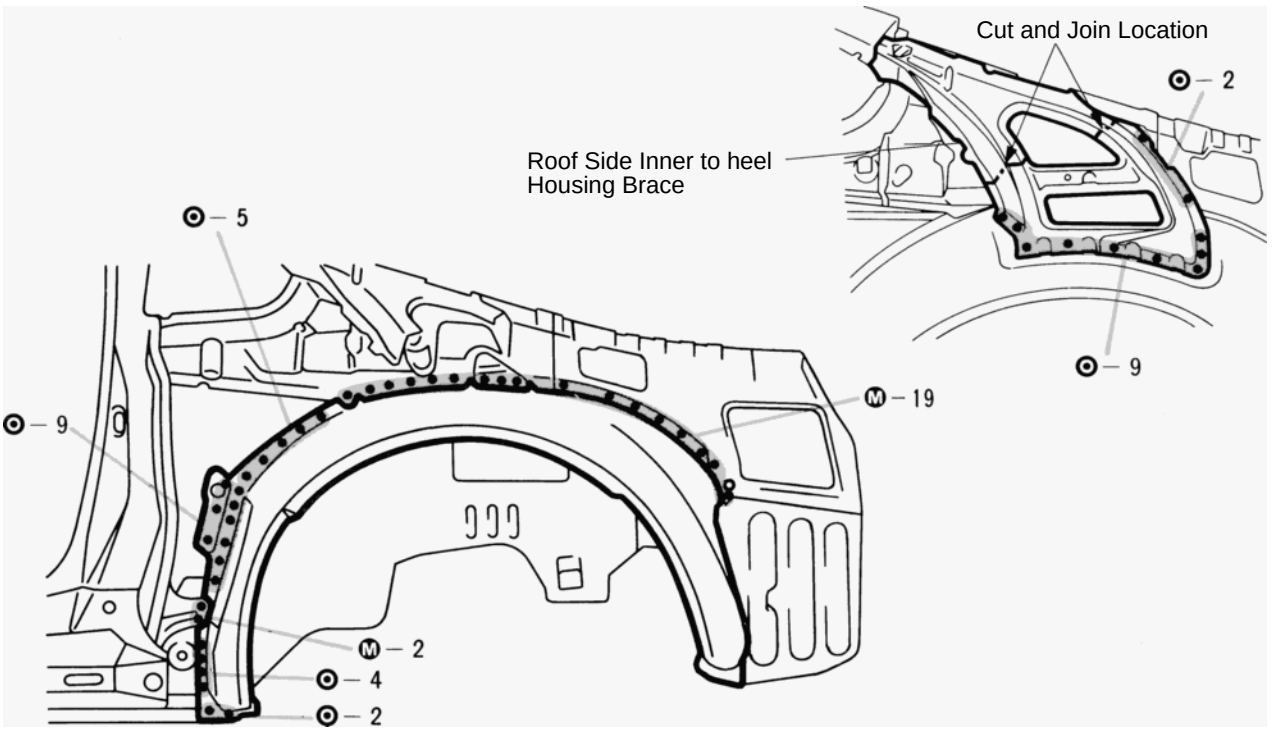

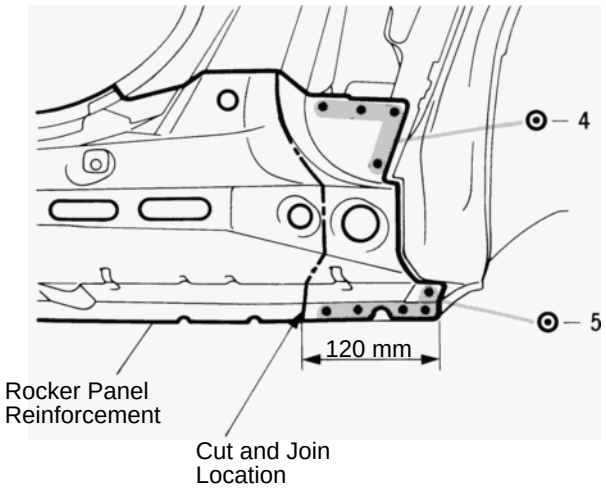

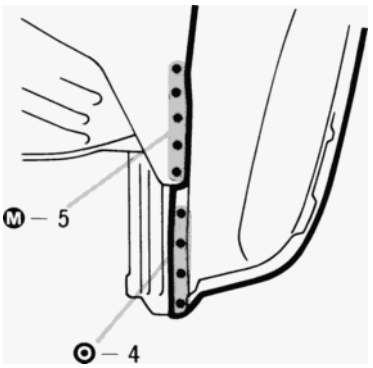

1. Cut the roof side inner to wheel housing brace and the rocker panel reinforcement end at the location shown above. Remove the quarter wheel housing outer panel.

mm	in.
120	4.72

INSTALLATION

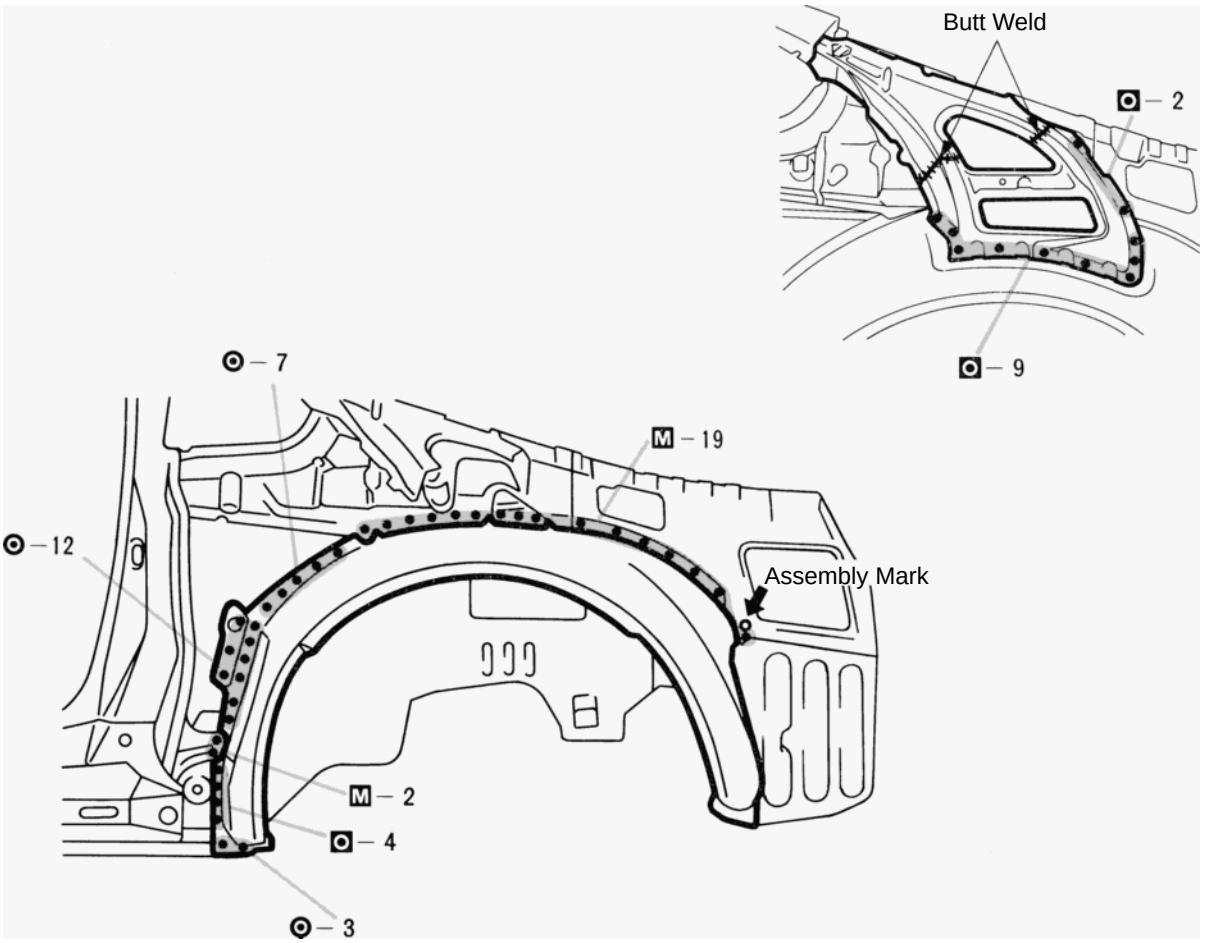

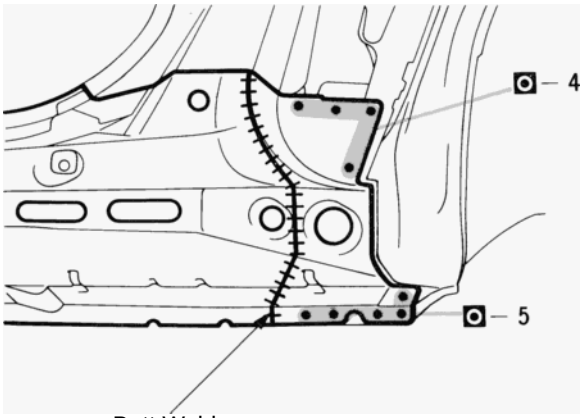

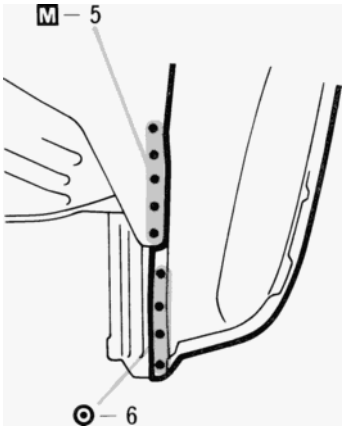

1. Determine the position of the new parts by the assembly marks of the inner and outer panels.

QUARTER INNER PANEL (CUT-P): Left Side

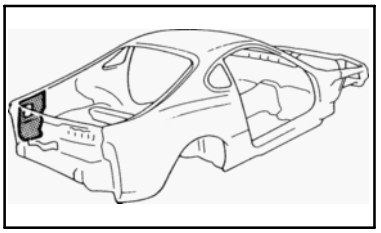

REMOVAL (With the quarter panel and body lower back panel removed.)

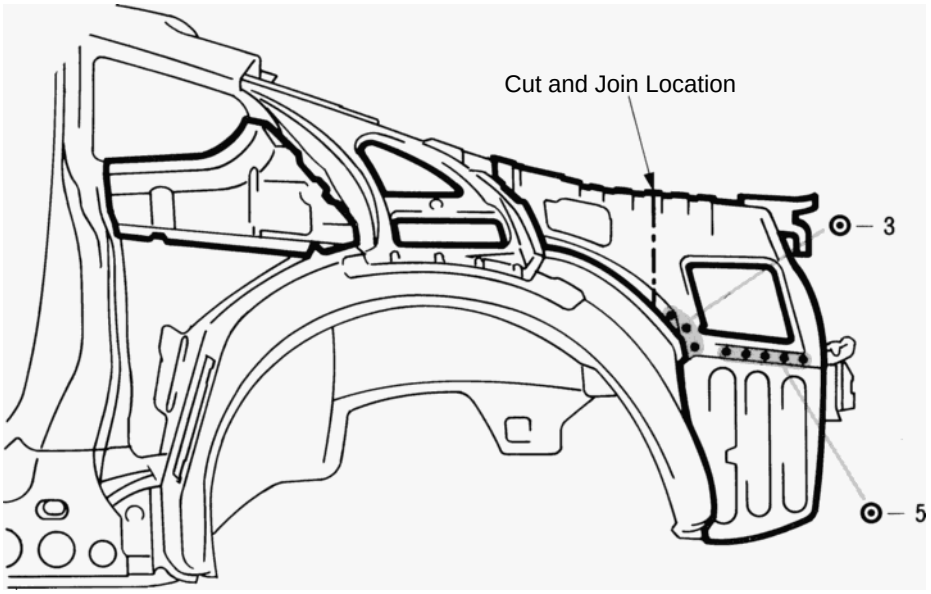

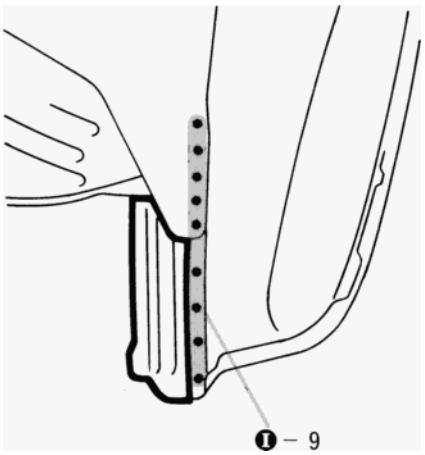

1. Cut and join the parts at the location as shown above.

INSTALLATION

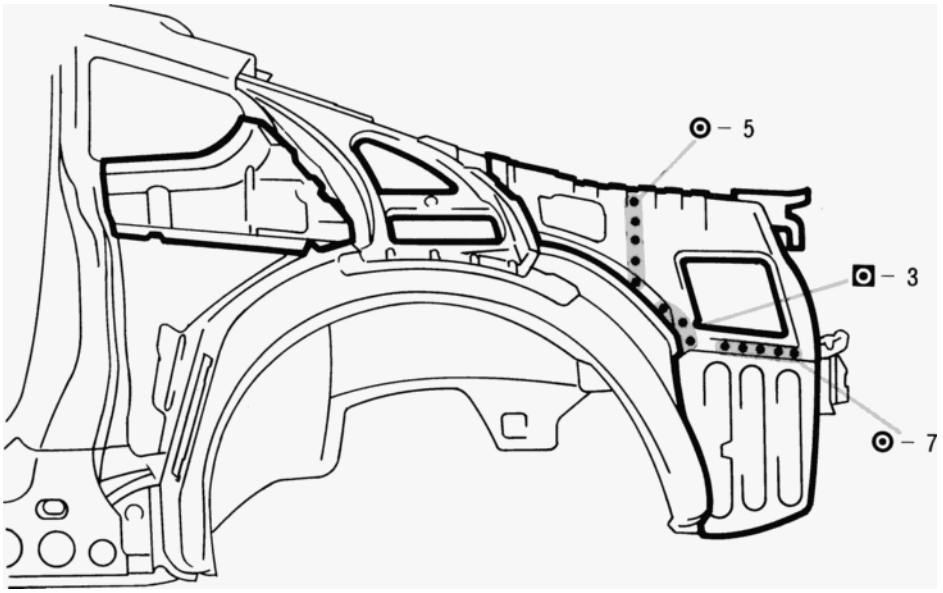

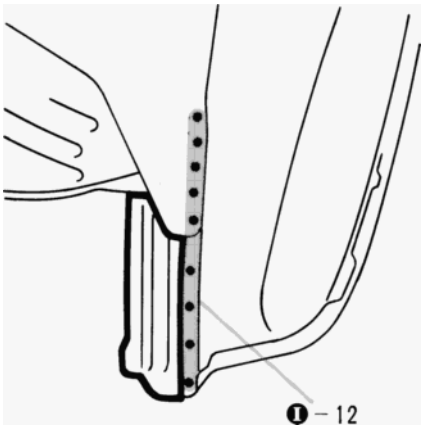

1. Overlap the new parts 20 mm (0.79 in.) at the locations and spot weld.
2. For overlapping areas apply sealer to both sides.

HINT: For other sealing points, refer to section AR.

QUARTER INNER PANEL (CUT-P): Right Side

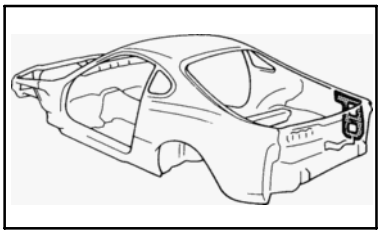

REMOVAL (With the quarter panel and body lower back panel removed.)

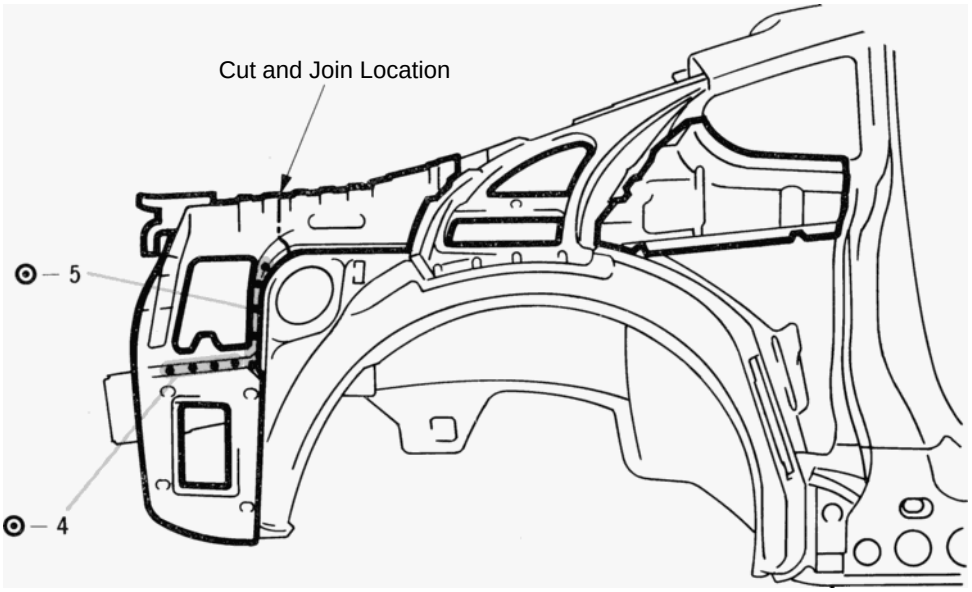

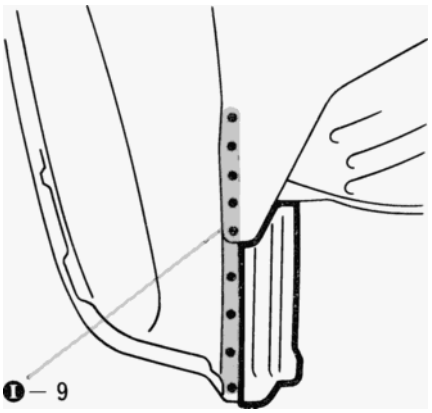

1. Cut and join the parts at the location as shown above.

INSTALLATION

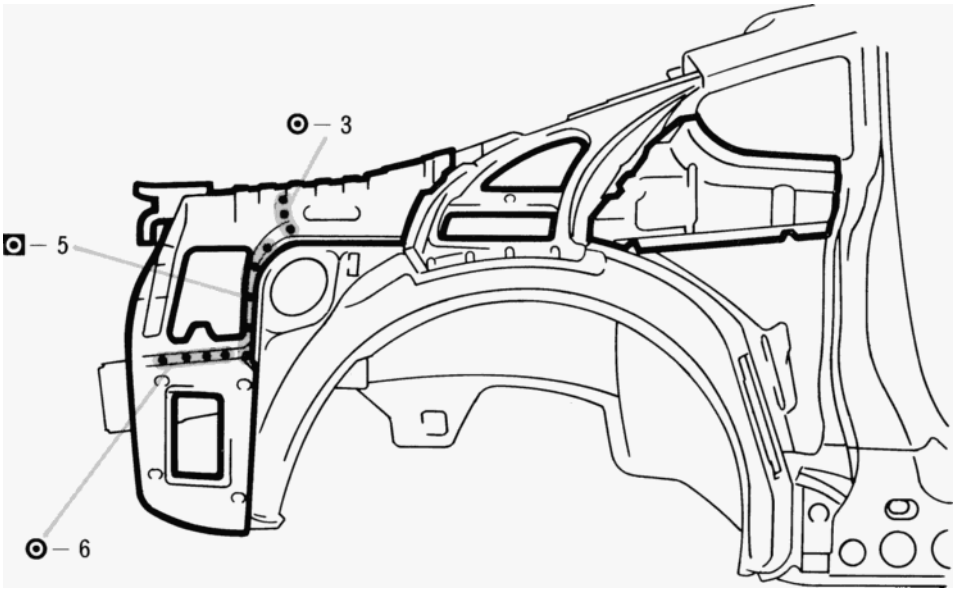

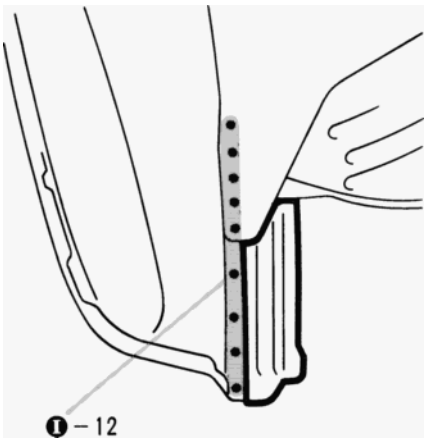

1. Overlap the new parts 20 mm (0.79 in.) at the cut locations and spot weld.
2. For overlapping areas, apply sealer to both sides.

HINT: For other sealing points, refer to section AR.

QUARTER PANEL (CUT)

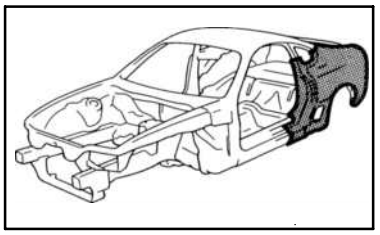

REMOVAL

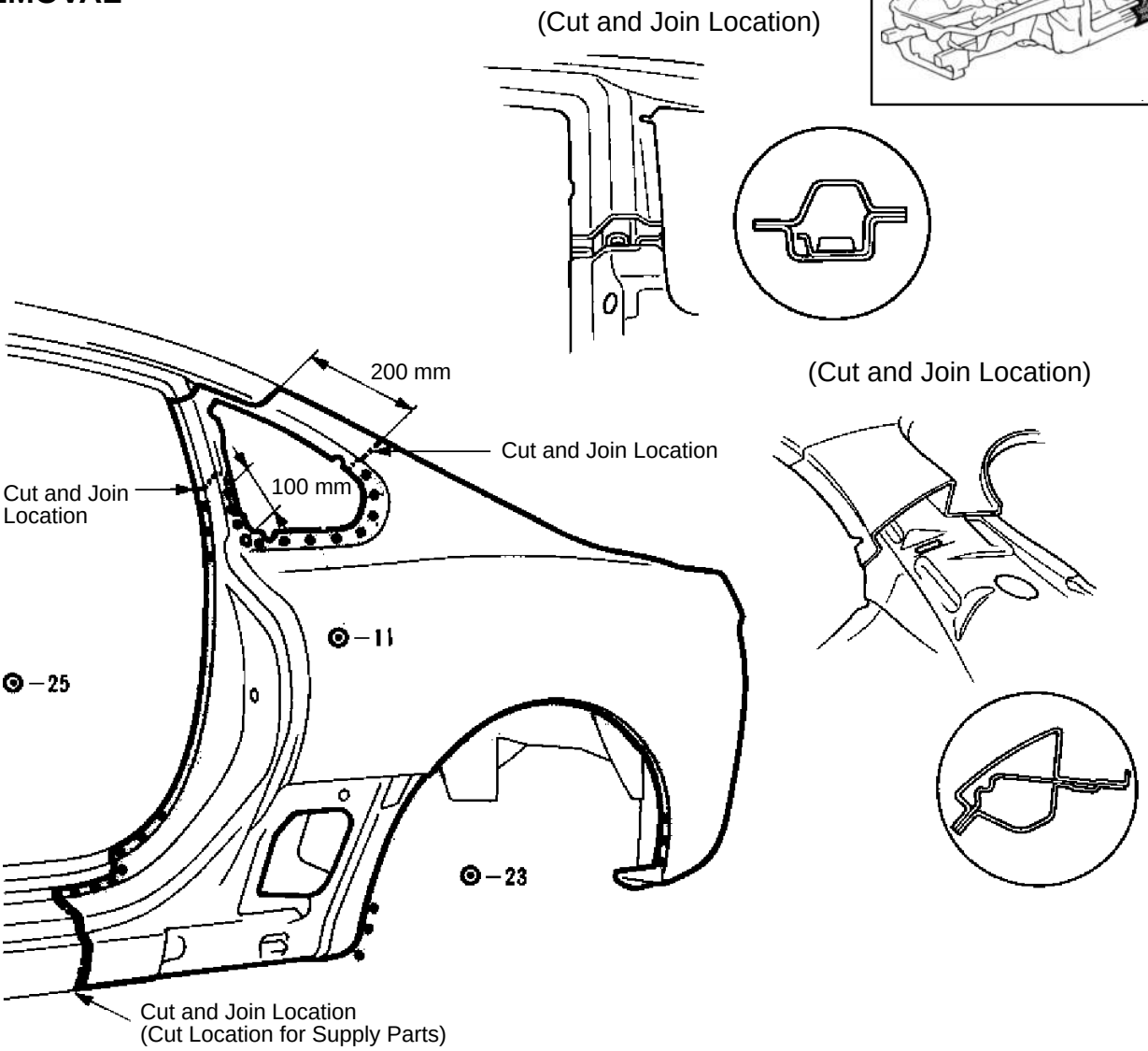

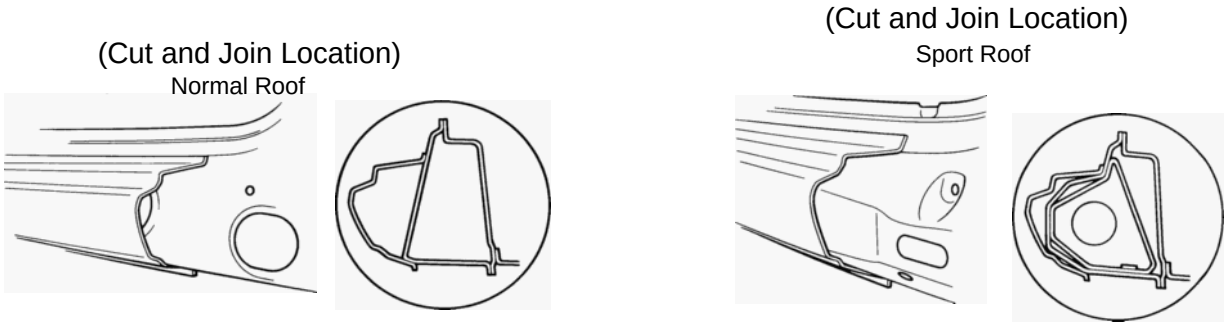

1. Cut and join the parts at the location shown above.

mm	in.
100	3.94
200	7.87

REMOVAL (Cont'd)

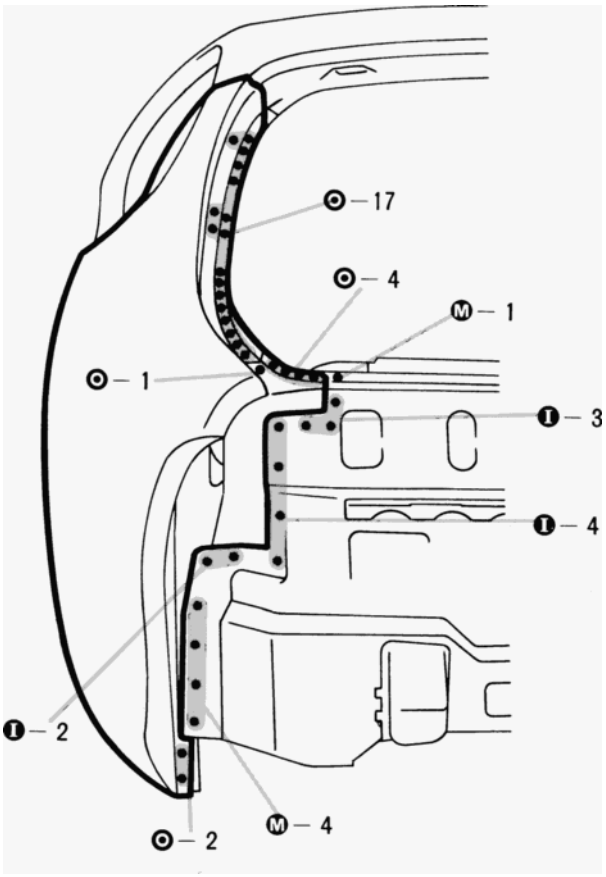

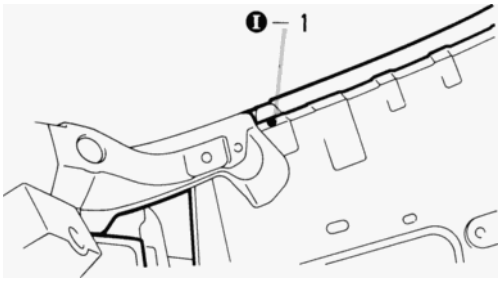

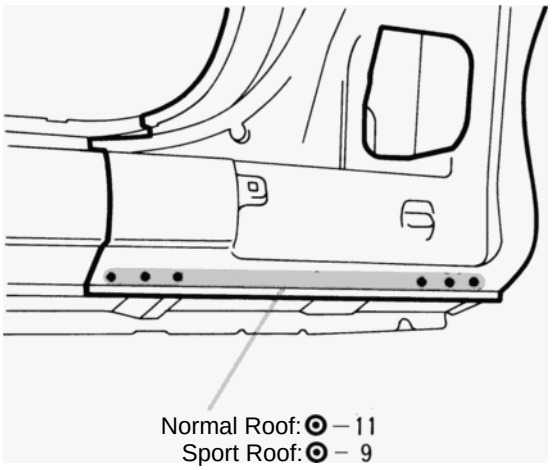

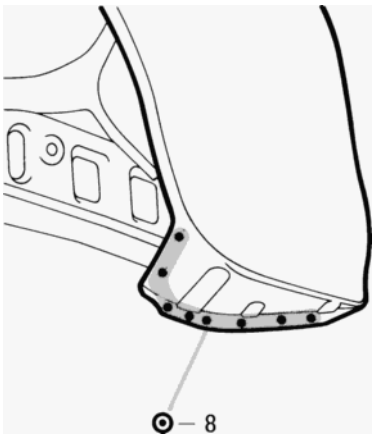

INSTALLATION

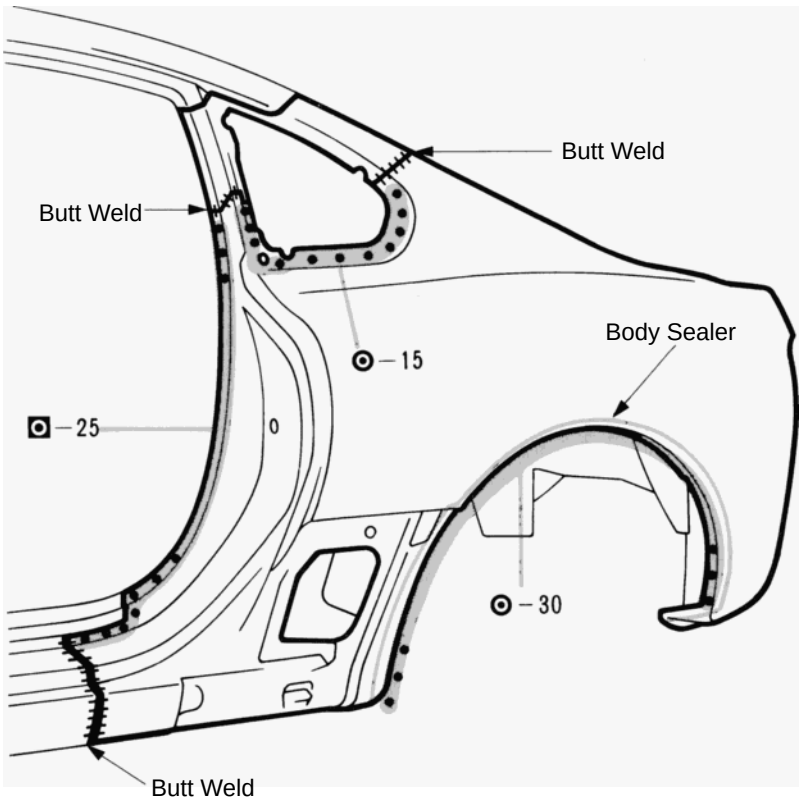

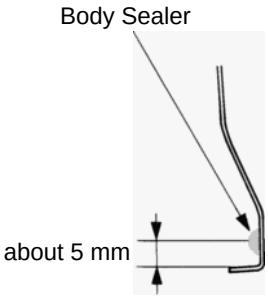

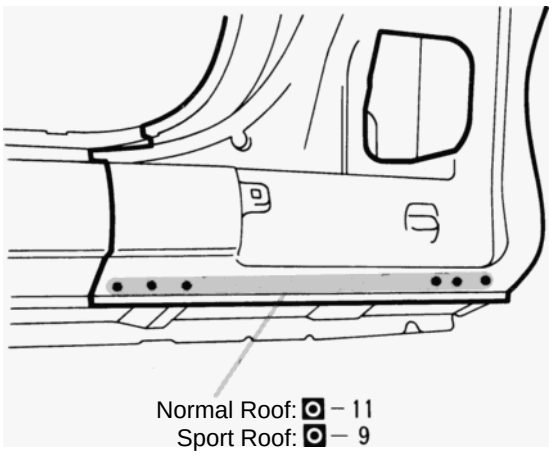

mm	in.
5	0.20

1. Before temporarily installing the new parts, apply body sealer to the wheel arch.

HINT:

1) Apply body sealer about 5 mm (0.20 in.) from the flange, avoiding any oozing.

2) Apply sealer evenly, about 3 - 4 mm (0.12 - 0.16 in.) in diameter.

3) For other sealing points, refer to section AR.

2. Temporarily install the new parts and check the fit of the front door, back door and rear combination lamp.
3. Apply foamed material to the pillar section.

HINT: For the foamed material application areas, refer to page AP-4 .

INSTALLATION (Cont'd)

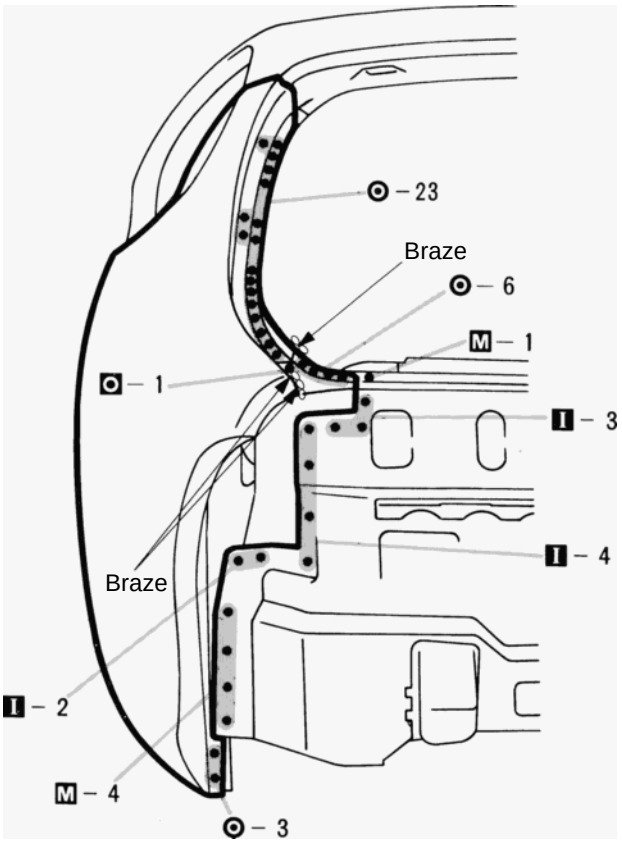

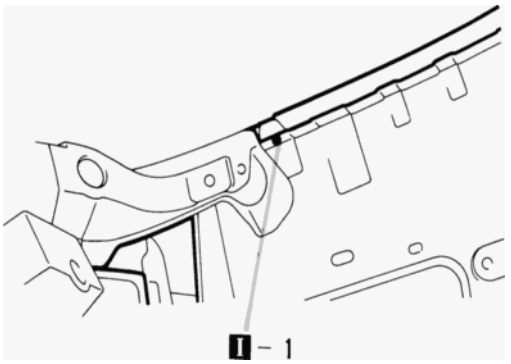

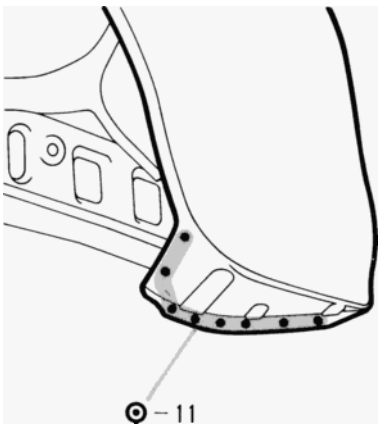

QUARTER WHEEL HOUSING OUTER PANEL (ASSY): Normal Roof Right Side

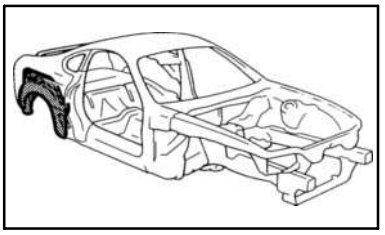

REMOVAL (With the quarter panel removed.)

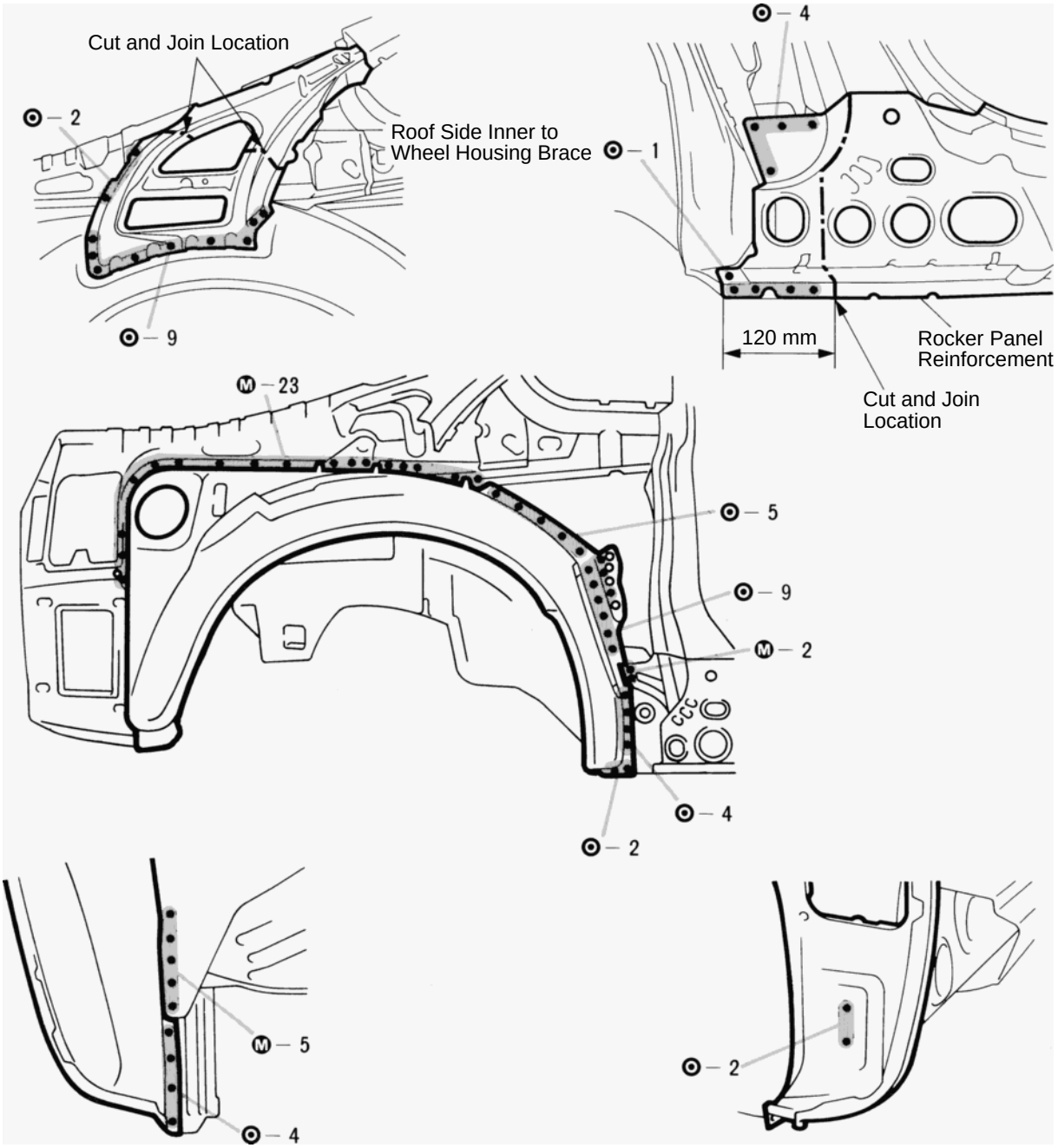

1. Cut the roof side inner to wheel housing brace and the rocker panel reinforcement end at the locations noted above. Remove the quarter wheel housing outer panel.

mm	in.
120	4.72

INSTALLATION

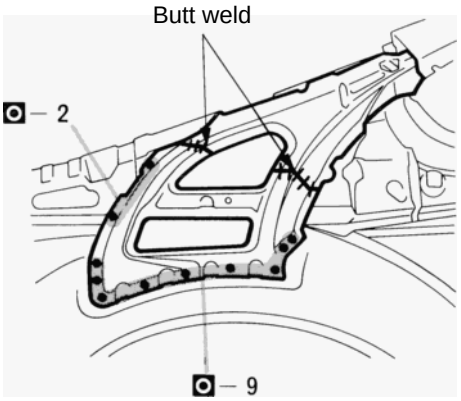

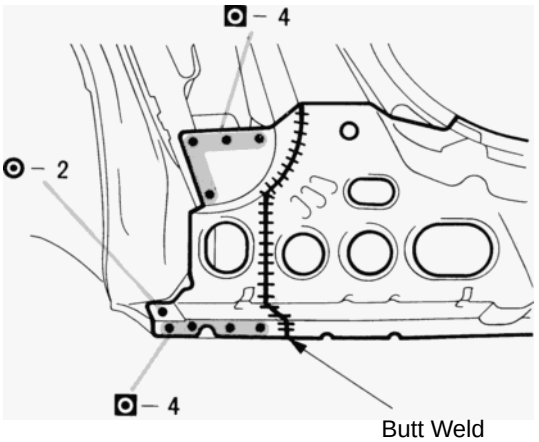

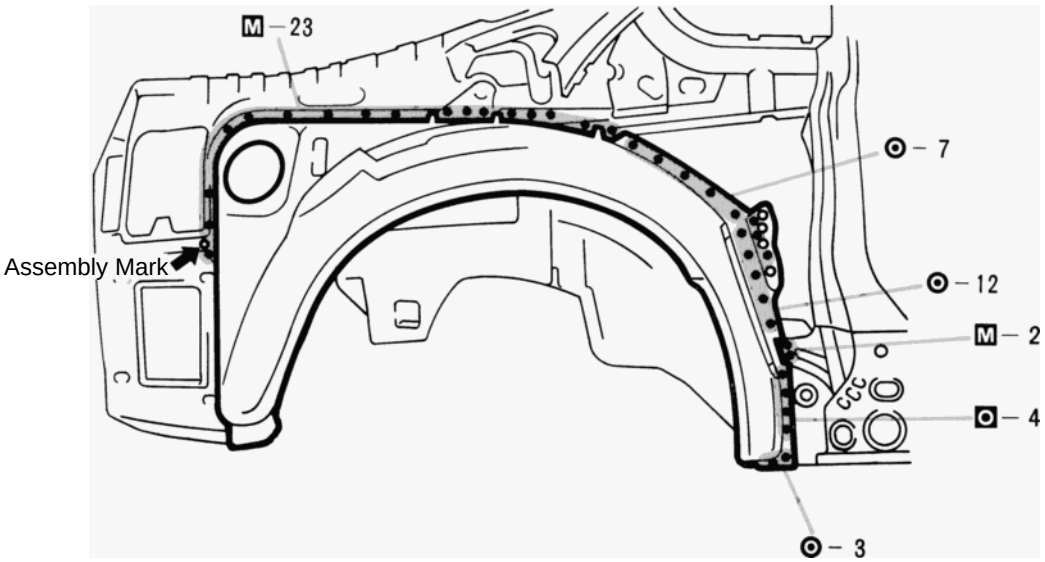

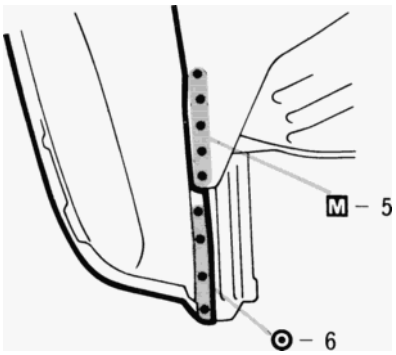

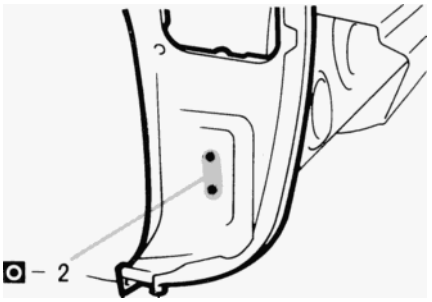

1. Determine the position of the new parts by the assembly marks of the inner and outer panels.

RADIATOR UPPER SUPPORT (ASSY)

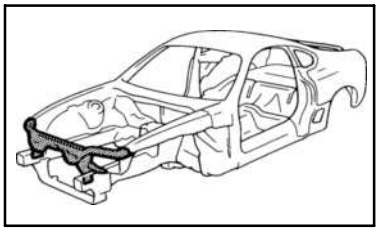

REMOVAL

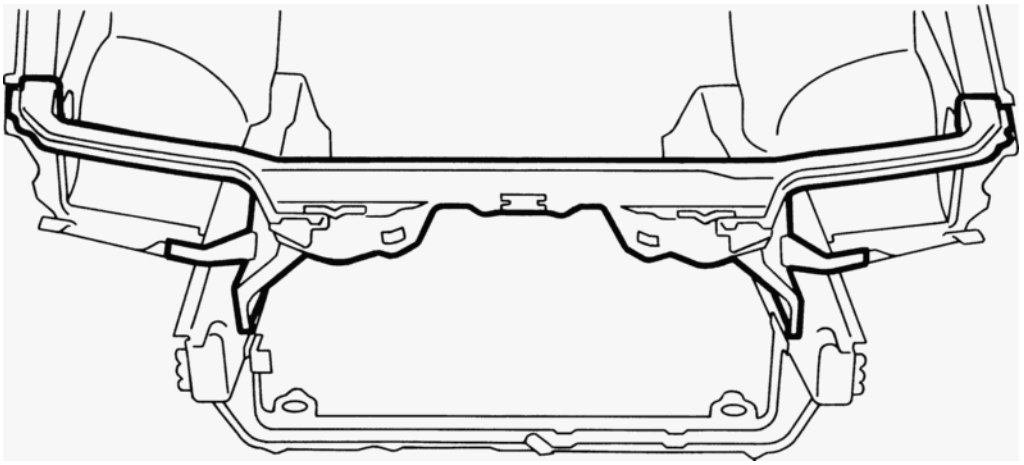

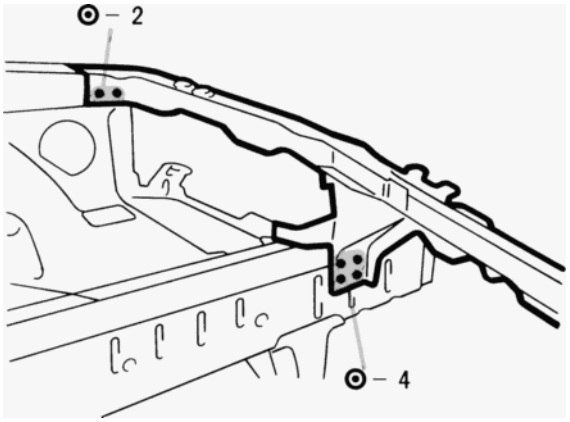

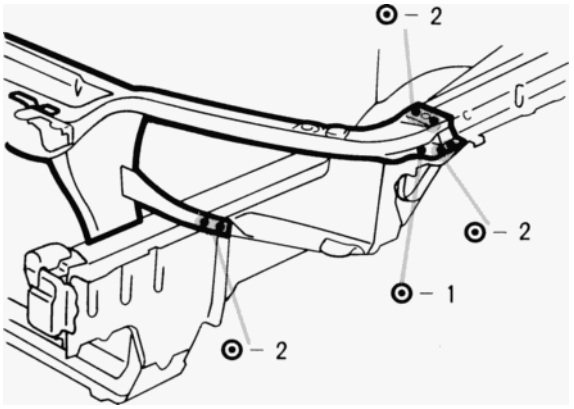

INSTALLATION

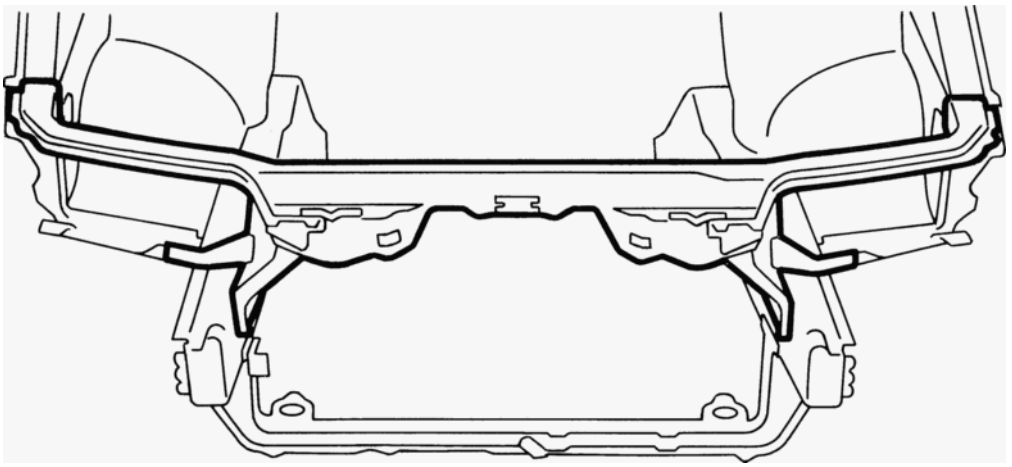

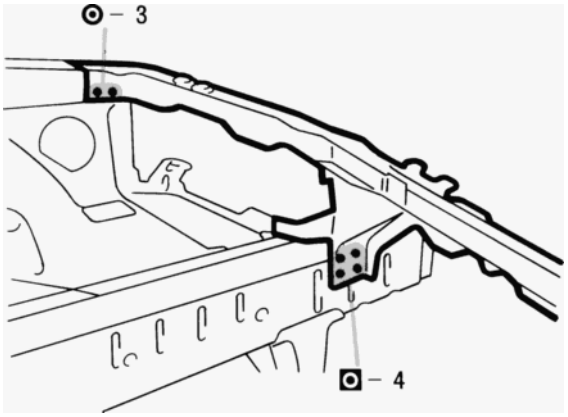

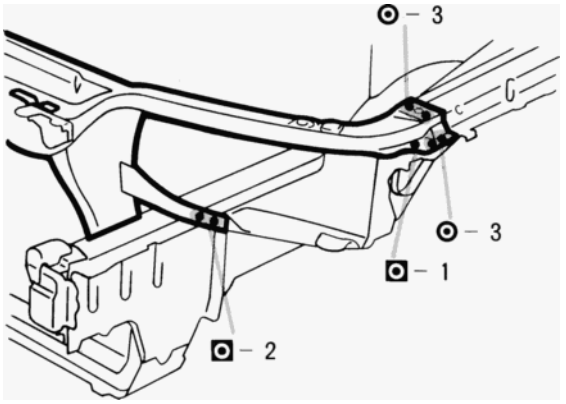

1. Temporarily install the new parts and measure each part in accordance with the body dimension diagram.

HINT: First install the hood lock support.

REAR FLOOR PAN TO QUARTER PANEL EXTENSION (ASSY)

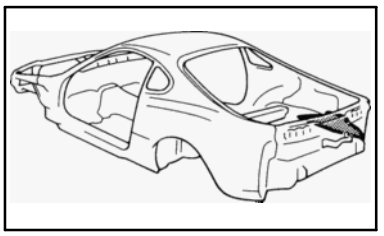

REMOVAL (With the body lower back panel removed.)

(Right Side)

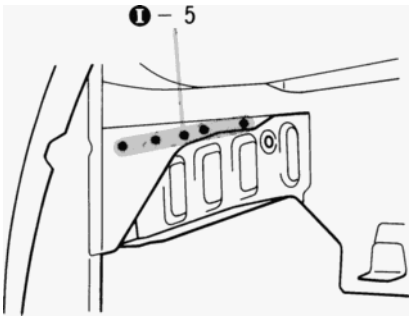

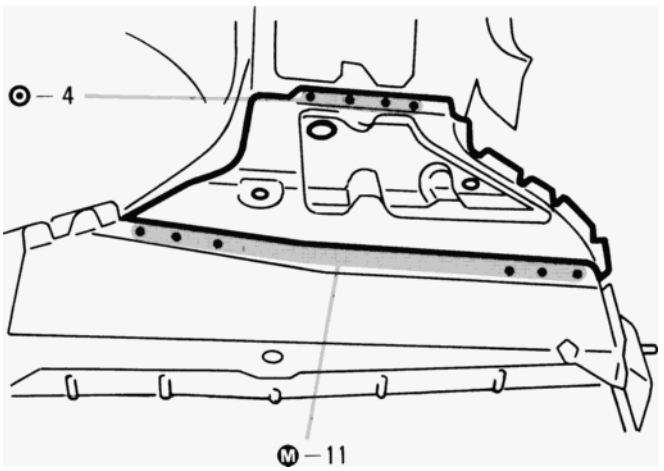

(Left Side)

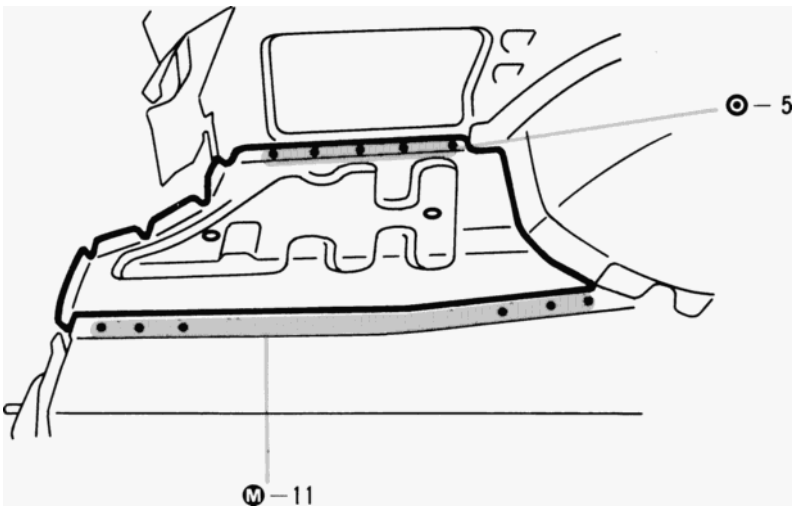

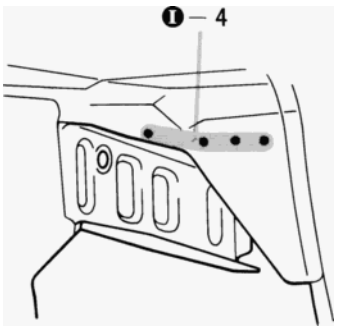

1. Push down on the rear floor pan to quarter panel extension and remove it.

INSTALLATION

(Right Side)

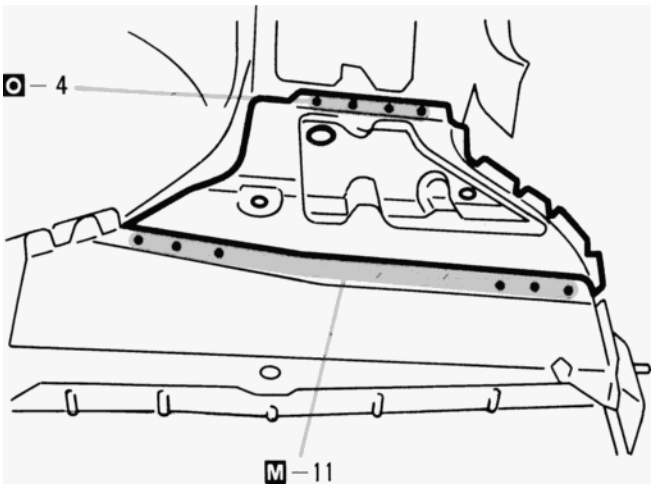

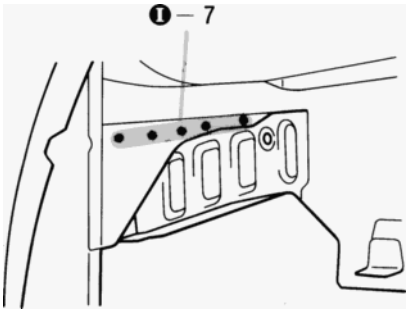

(Left Side)

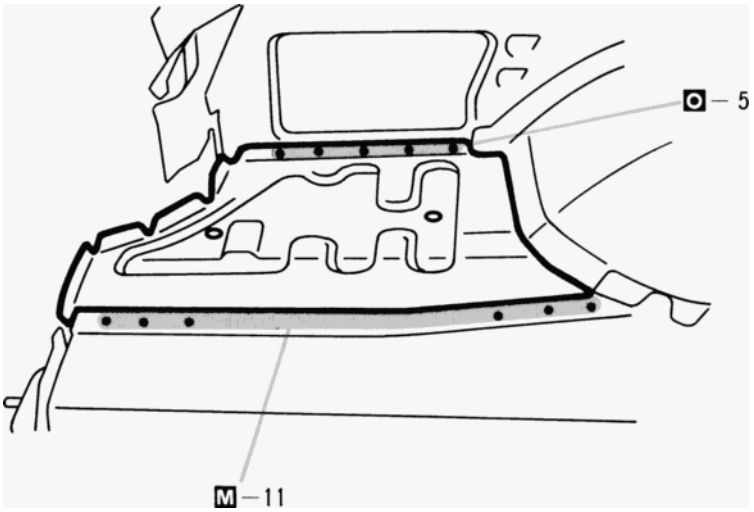

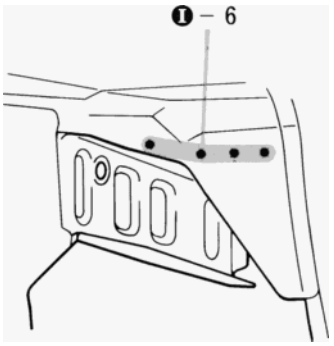

REAR FLOOR SIDE REAR MEMBER (ASSY)

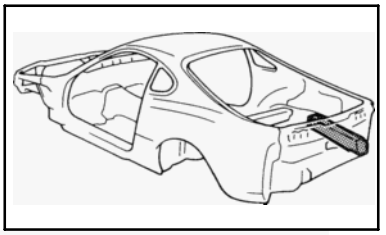

REMOVAL (With the rear floor pan and rear floor pan to quarter panel extension removed.)

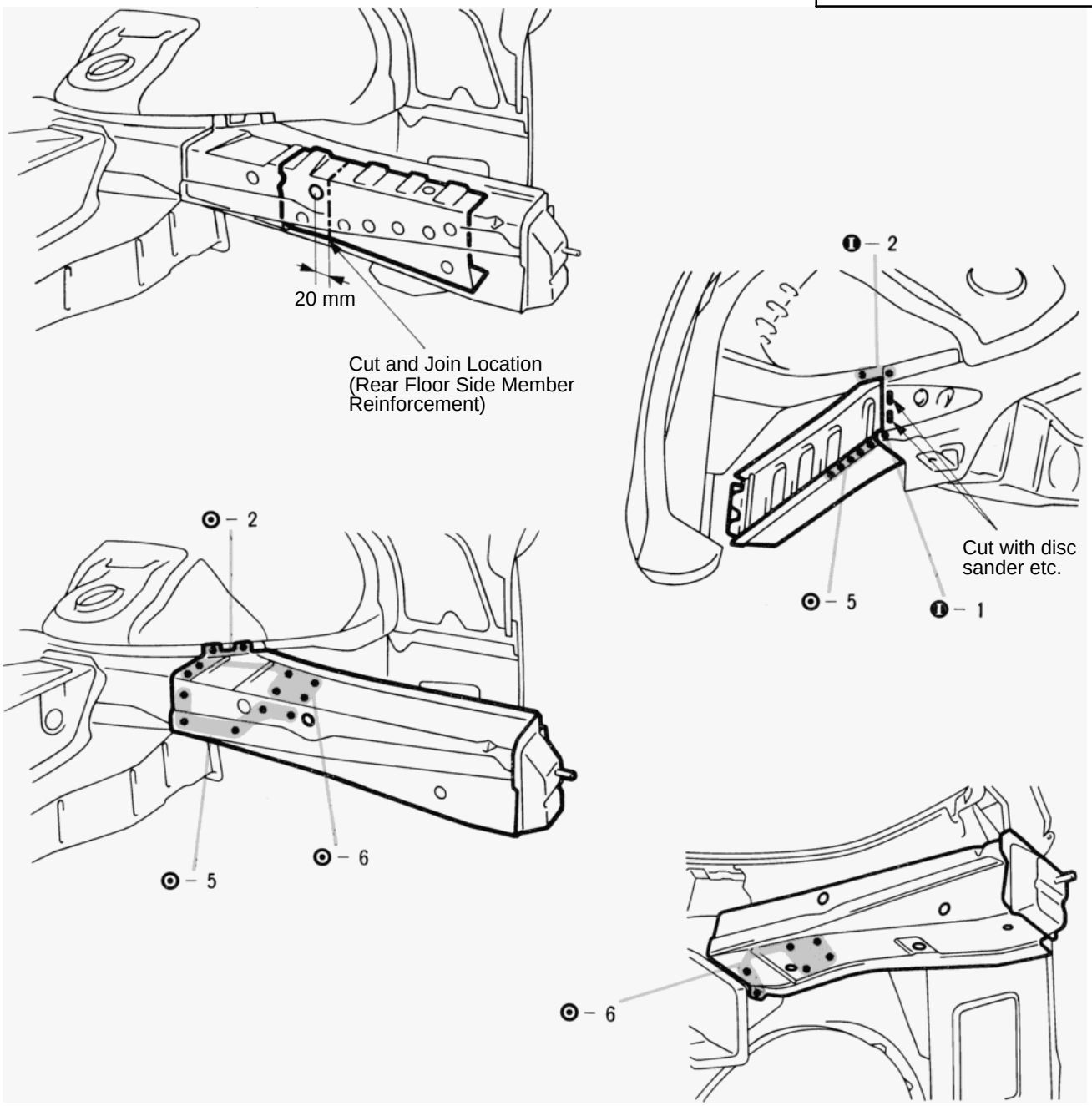

1. Cut out the rear floor side member reinforcement at the cut location indicated above.

mm	in.
20	0.79

INSTALLATION

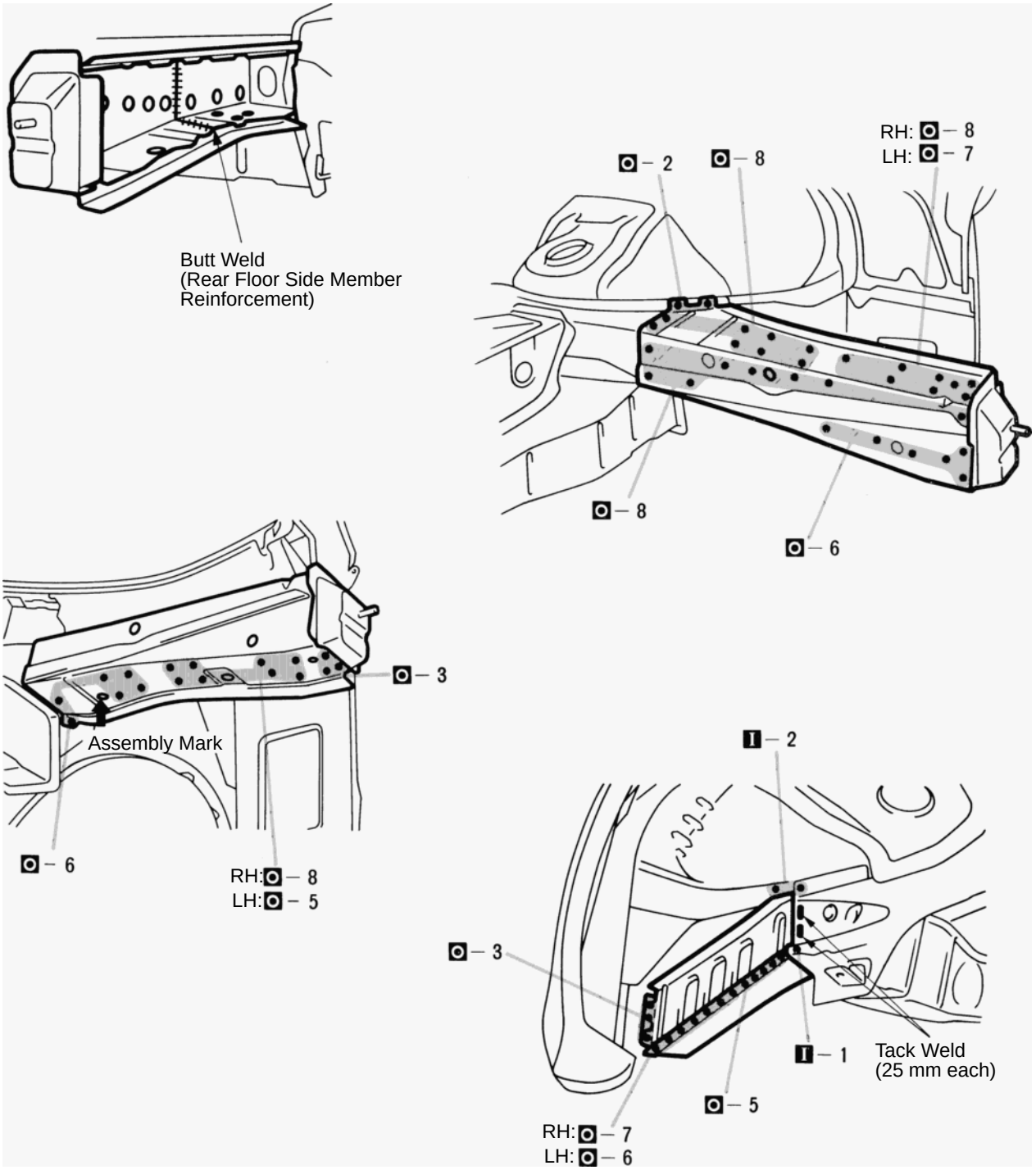

mm	in.
25	0.98

1. When temporarily installing the new parts, determine the installation position by the assembly mark. Then, measure each part in accordance with the body dimension diagram.

REAR FLOOR NO. 2 CROSSMEMBER (ASSY)

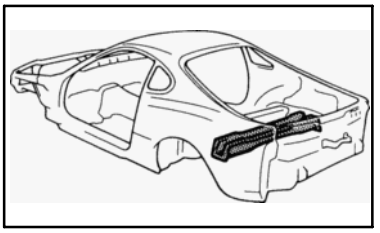

REMOVAL

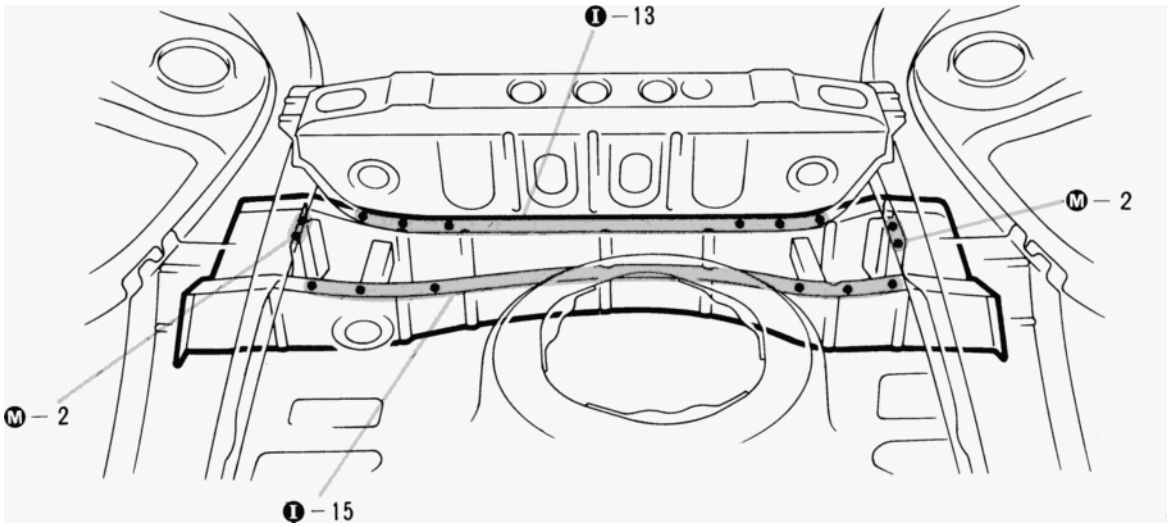

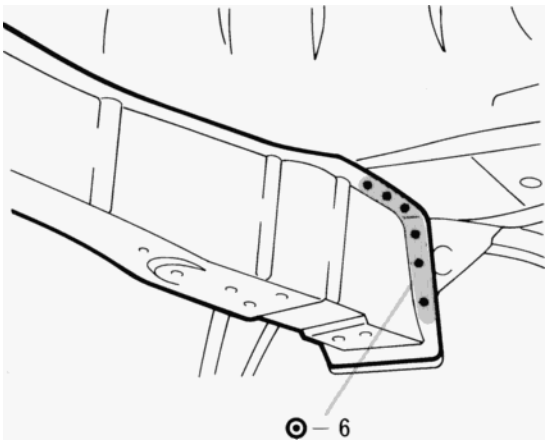

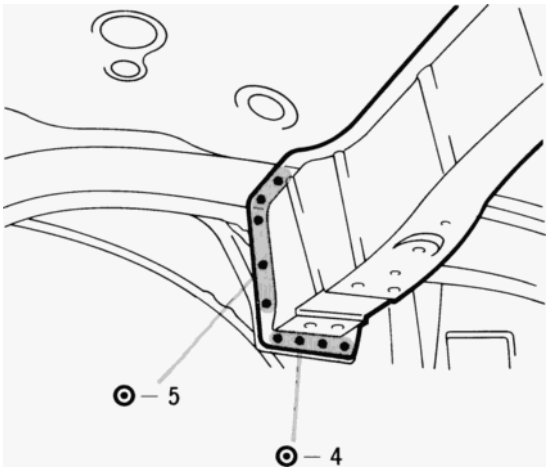

INSTALLATION

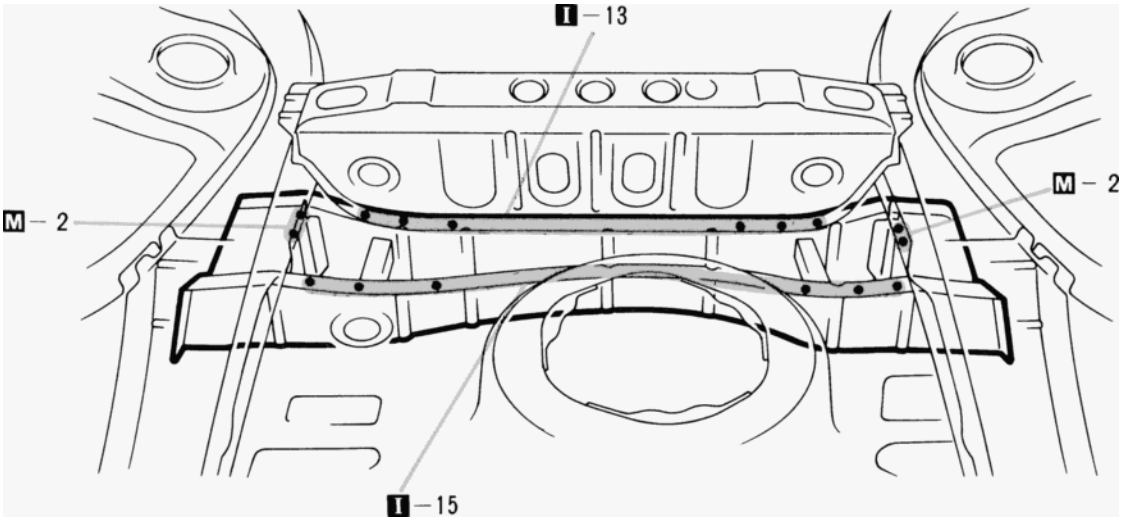

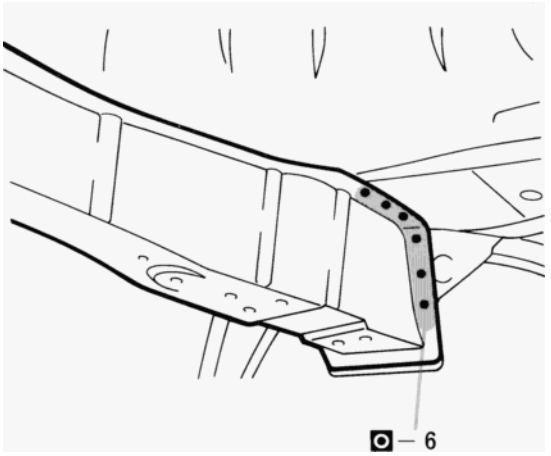

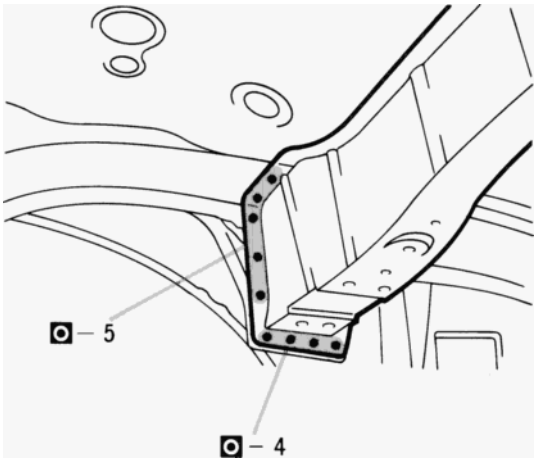

1. Temporarily install the new parts and measure each part in accordance with the body dimension diagram.

REAR FLOOR PAN (ASSY)

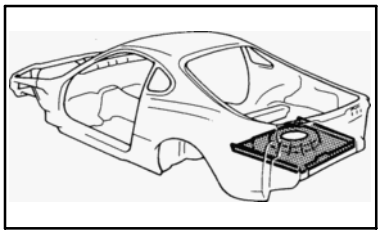

REMOVAL (With the body lower back panel removed.)

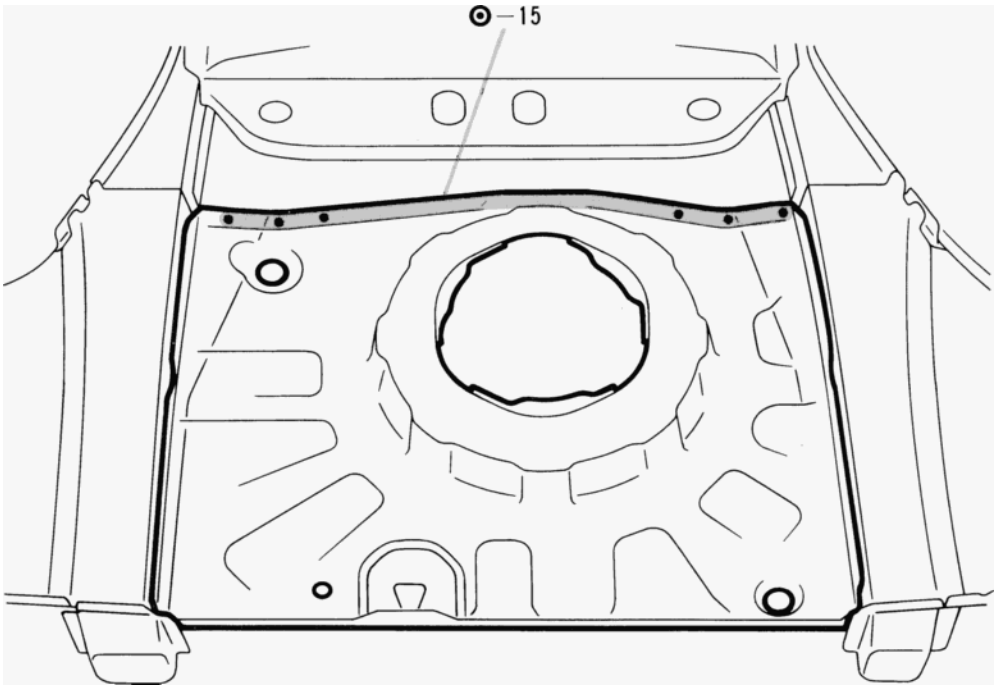

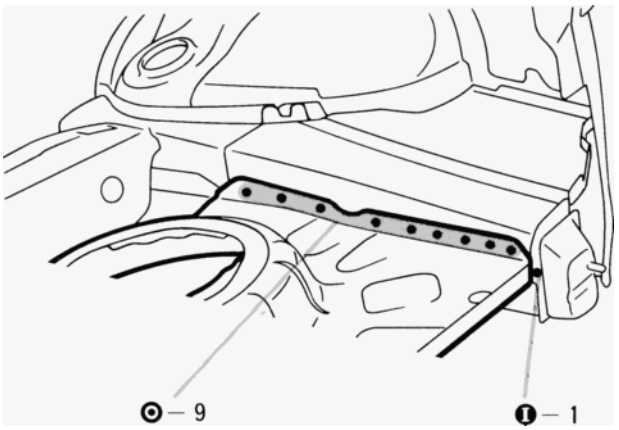

INSTALLATION

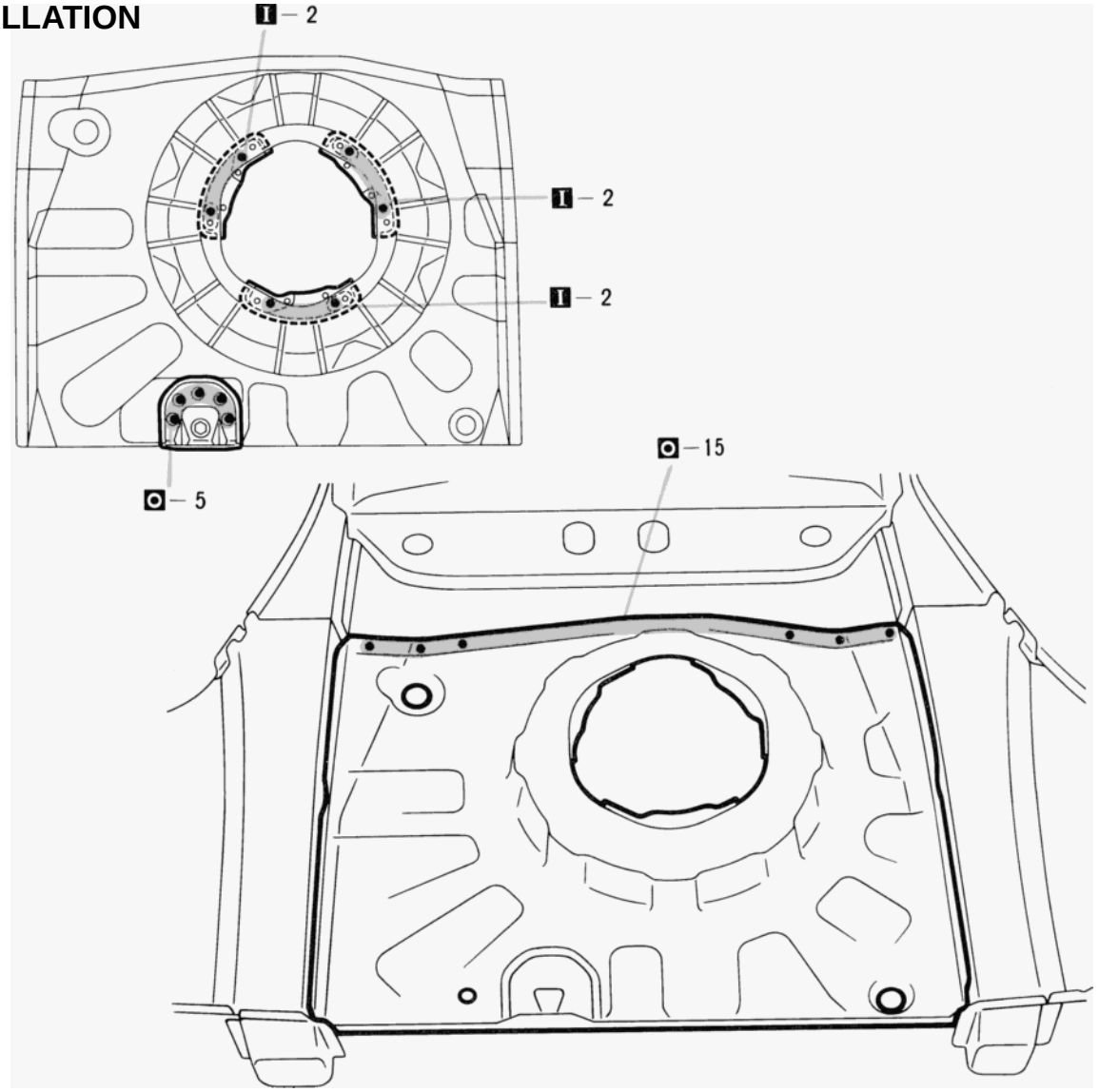

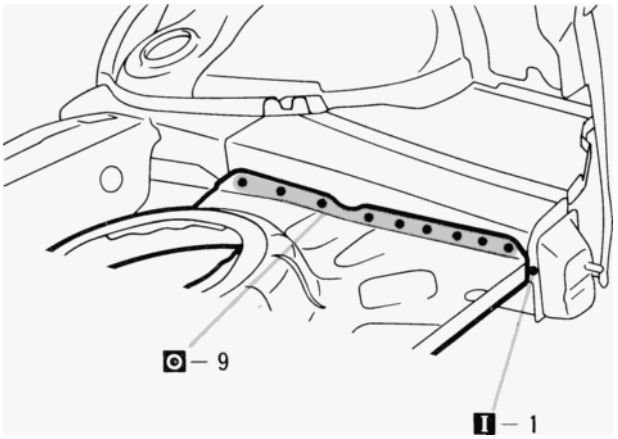

REAR SUSPENSION CROSSMEMBER

(Three-Dimensional Distance)

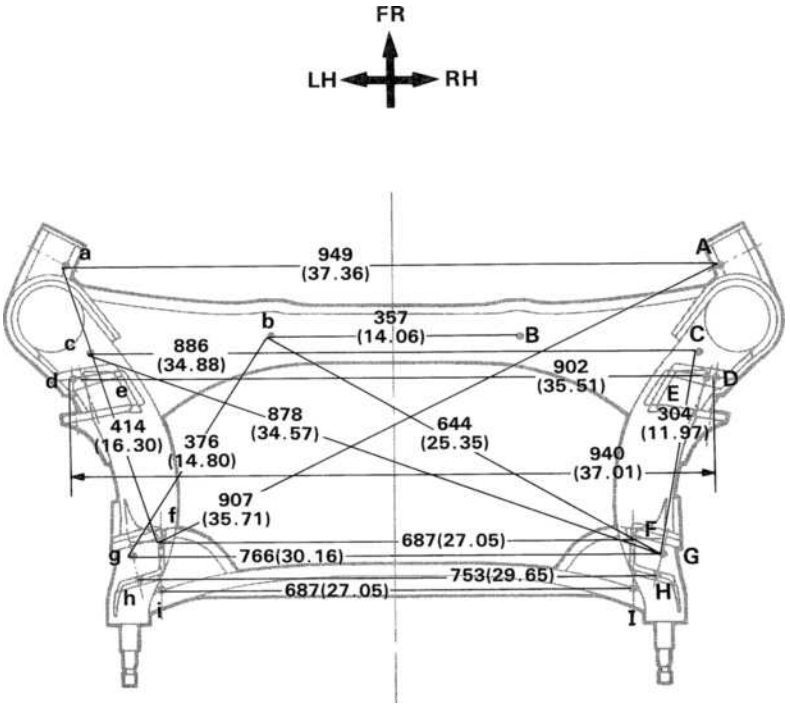

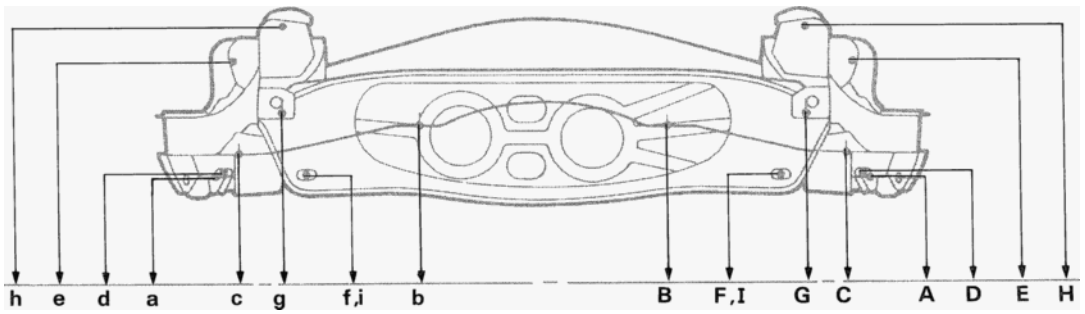

NO8909
NO8909

mm (in.)

Symbol	Name	Hole dia.	Symbol	Name	Hole dia.
A, a	Strut rod installation hole-inner	14.2 (0. 559)	F, f	No. 2 lower arm installation hole-front	26×14.2 (1.02×0.559)
B, b	Differential carrier installation nut	12 (0.47) nut	G, g	Rear suspension member standard hole	20 (0.79)
C, c	Rear suspension member standard hole	20 (0.79)	H, h	Upper arm installation hole-rear	14.2 (0.559)
D, d	No. 1 lower arm installation hole-front	26x 14.2 (1.02×0.559)	I, i	No. 2 lower arm installation hole-rear	26×14.2 (1.02×0.559)
E, e	Upper arm installation hole-front	14.2 (0.559)	—	—	—

REAR SUSPENSION CROSSMEMBER (Cont'd)

(Two-Dimensional Distance)

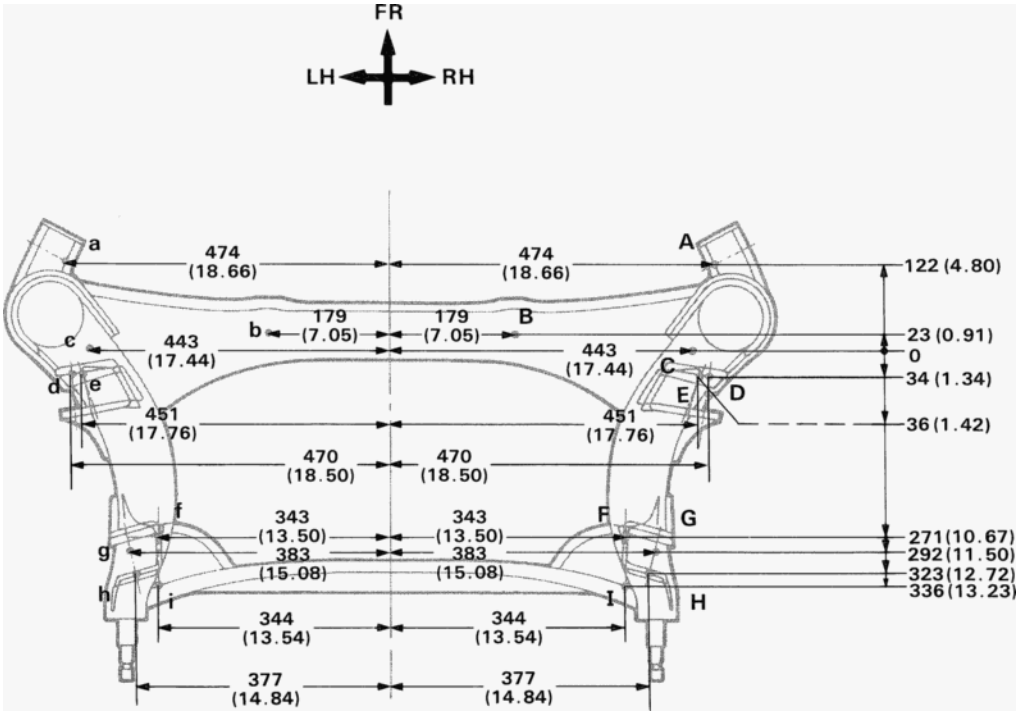

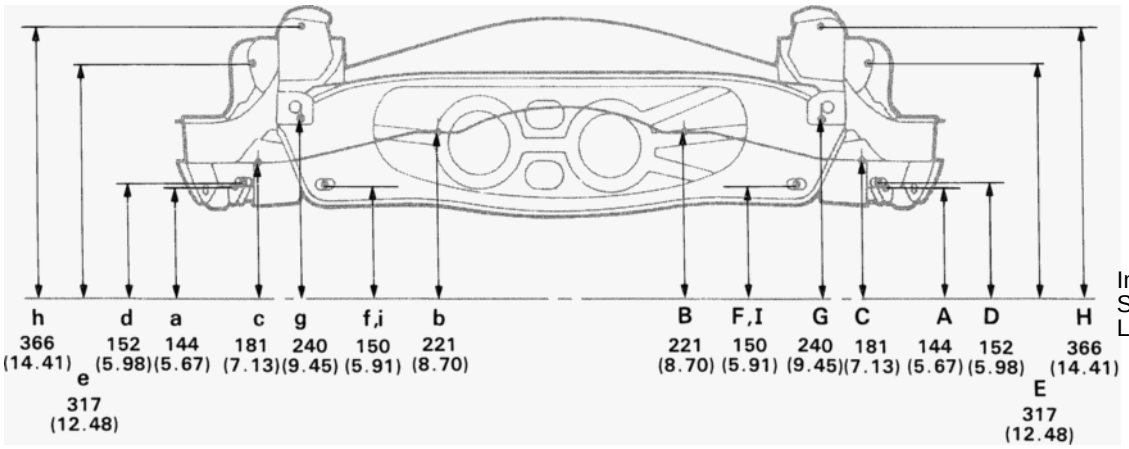

NO8909
NO8909

mm (in.)

Symbol	Name	Hole dia.	Symbol	Name	Hole dia.
A, a	Strut rod installation hole-inner	14.2 (0.559)	F, f	No. 2 lower arm installation hole-front	26×14.2 (1.02×0.559)
B, b	Differential carrier installation nut	12 (0.47) nut	G, g	Rear suspension member standard hole	20 (0.79)
C, c	Rear suspension member standard hole	20 (0.79)	H, h	Upper arm installation hole-rear	14.2 (0.559)
D, d	No. 1 lower arm installation hole-front	26×14.2 (1.02×0.559)	I, i	No. 2 lower arm installation hole-rear	26×14.2 (1.02×0.559)
E, e	Upper arm installation hole-front	14.2 (0.559)	—	—	—

ROCKER OUTER PANEL (CUT)

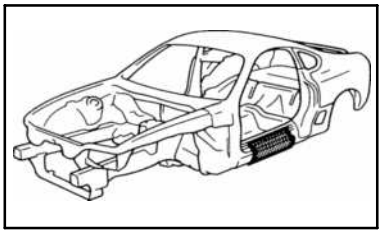

REMOVAL

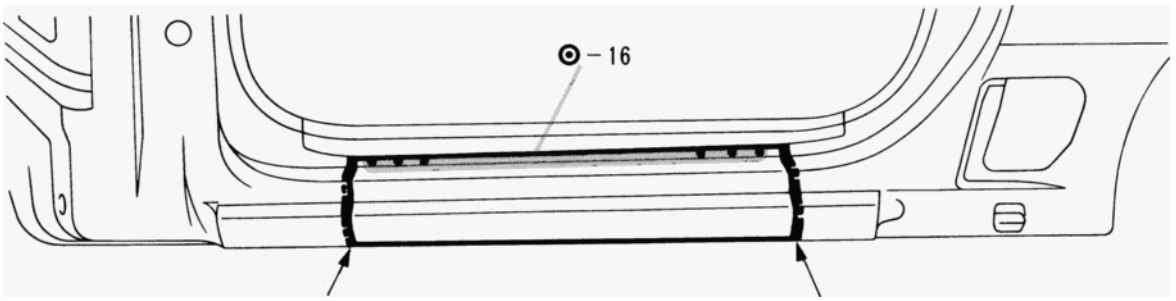

Cut and Join Location
(Cut Location for Supply Parts)

Cut and Join Location
(Cut Location for Supply Parts)

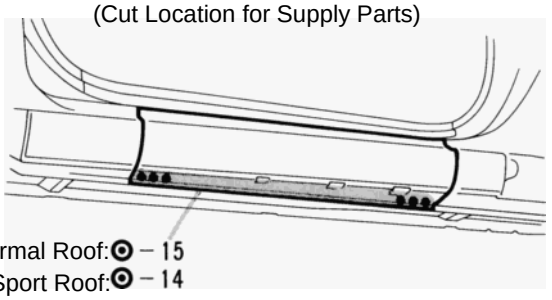

(Cut and Join Location)
Normal Roof

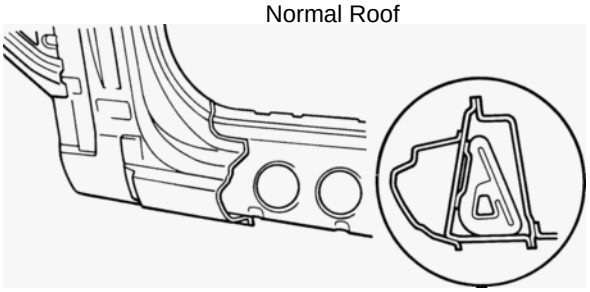

(Cut and Join Location)
Normal Roof

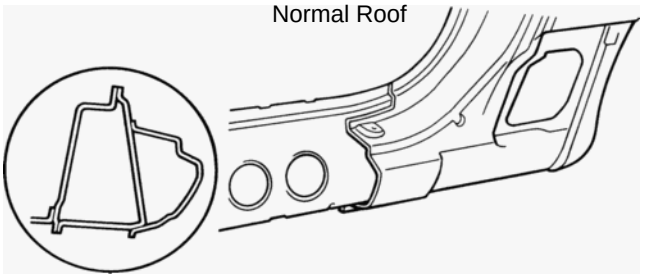

Sport Roof

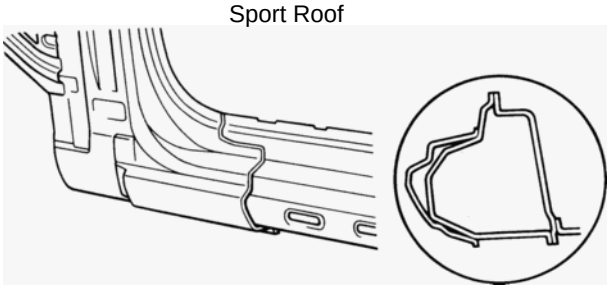

Sport Roof

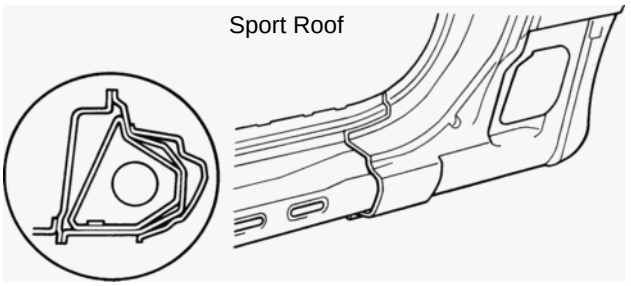

1. Cut and join the parts at the location as shown above.

HINT:

1) Be careful to cut so the rocker panel reinforcement is not damaged.

INSTALLATION

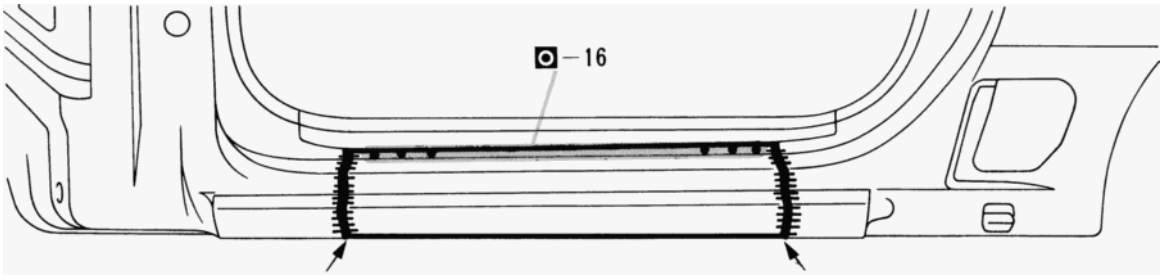

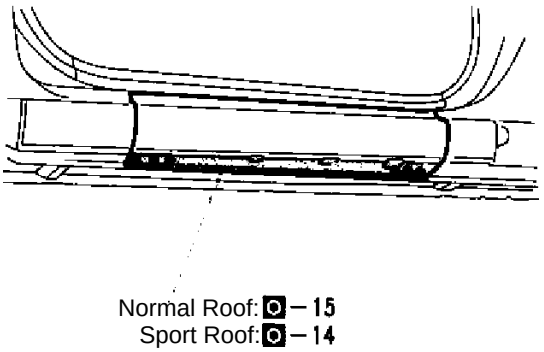

1. Temporarily install the new parts and check the fit of the front door.

ROOF PANEL (ASSY): Sport Roof

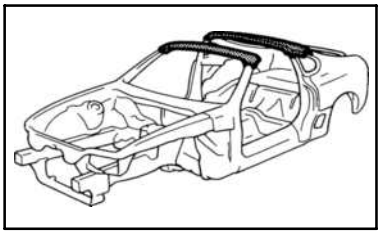

REMOVAL

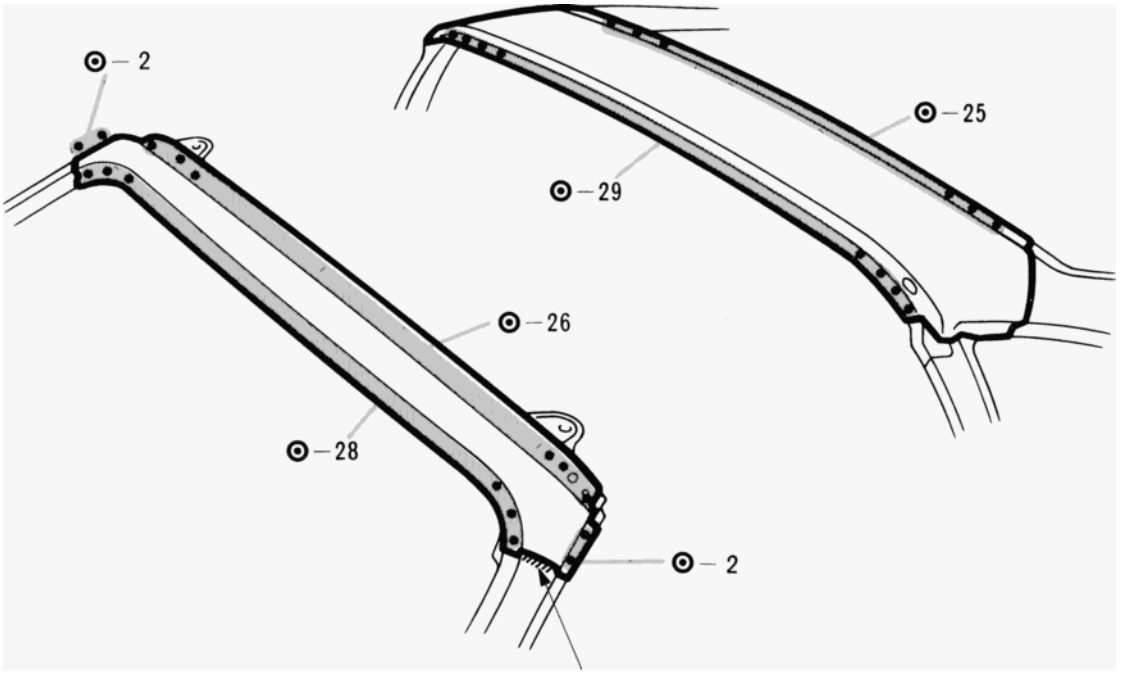

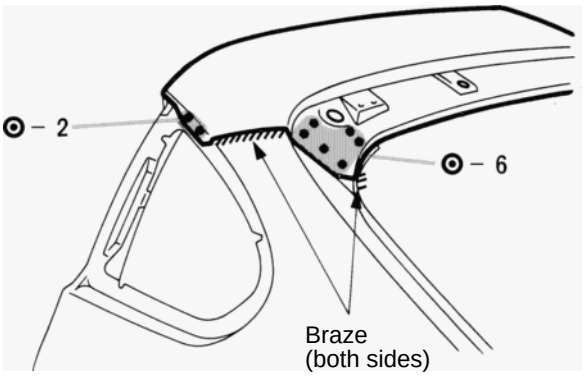

1. Heat the brazed area of the front body pillar and quarter panel and scrape off the brazing with a wire brush.

HINT: Be careful not to overheat the pillar sides.

INSTALLATION

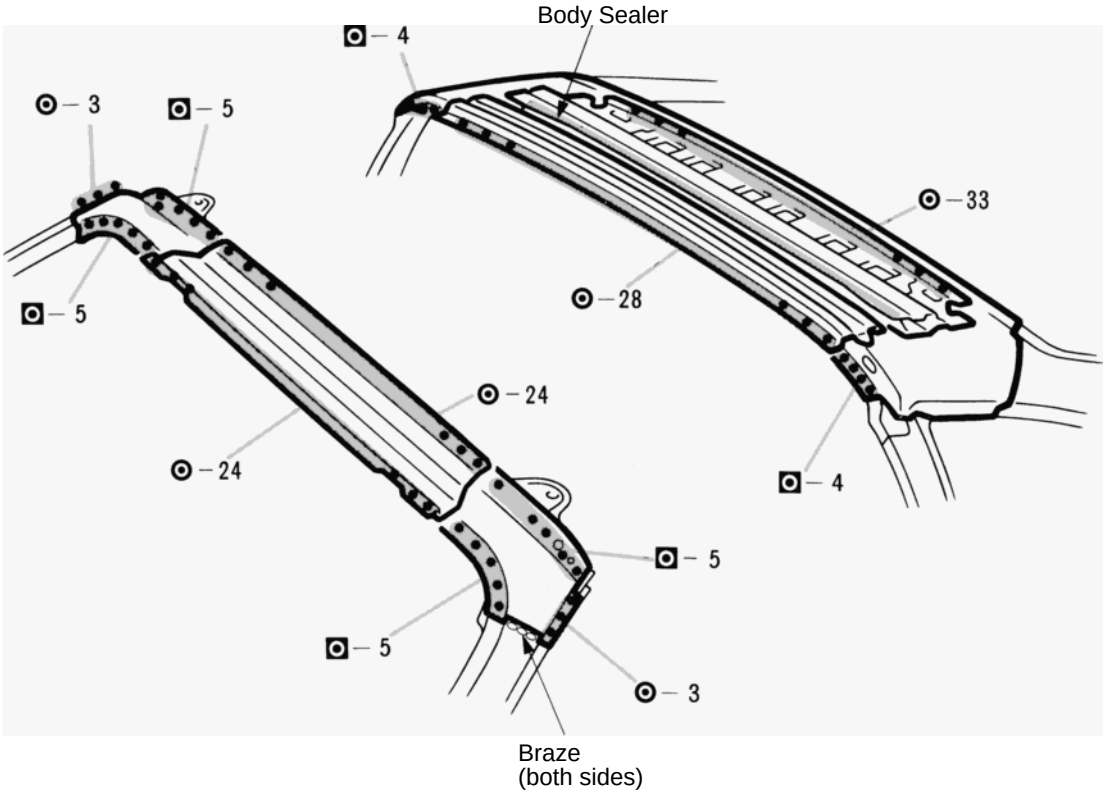

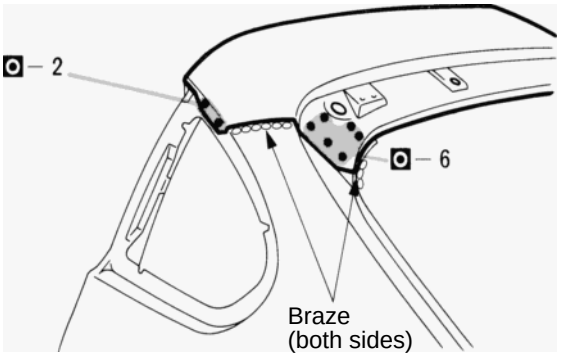

1. Before temporarily installing the new parts, apply body sealer to the windshield header panel, roof panel reinforcement and back door opening frame.

HINT:

1) Apply just enough sealer for the new parts to make contact.

2) For other sealing points, refer to Section AR.

2. Braze the front body pillar and quarter panel connection.

HINT: Before performing these operations, place a wet rag on the roof panel to protect it from damage.

ROOF PANEL (ASSY): Normal Roof

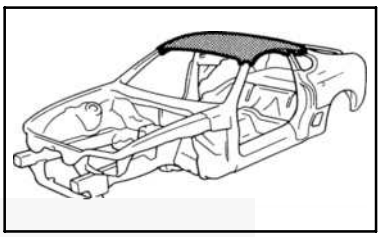

REMOVAL

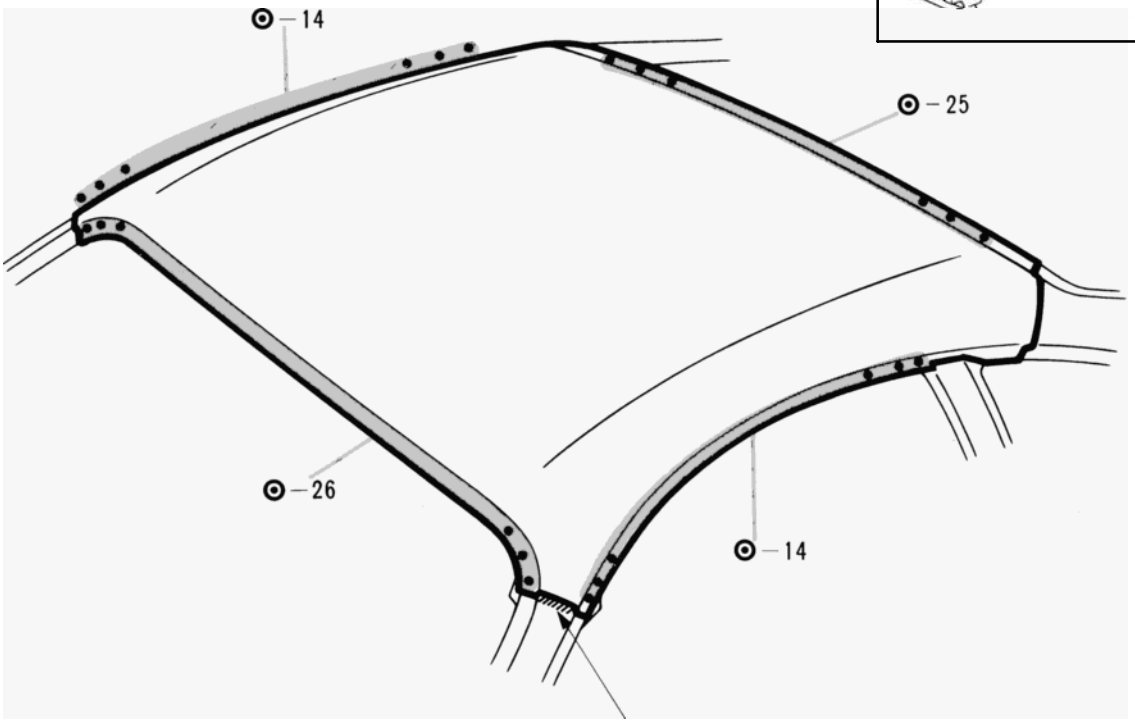

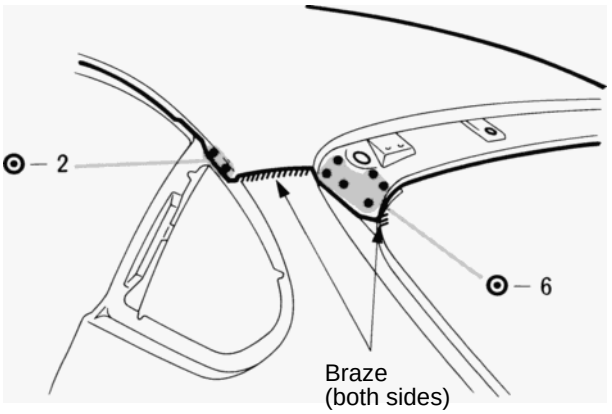

1. Heat the brazed area of the front body pillar and quarter panel and scrape off the brazing with a wire brush

HINT: Be careful not to overheat the pillar sides.

INSTALLATION

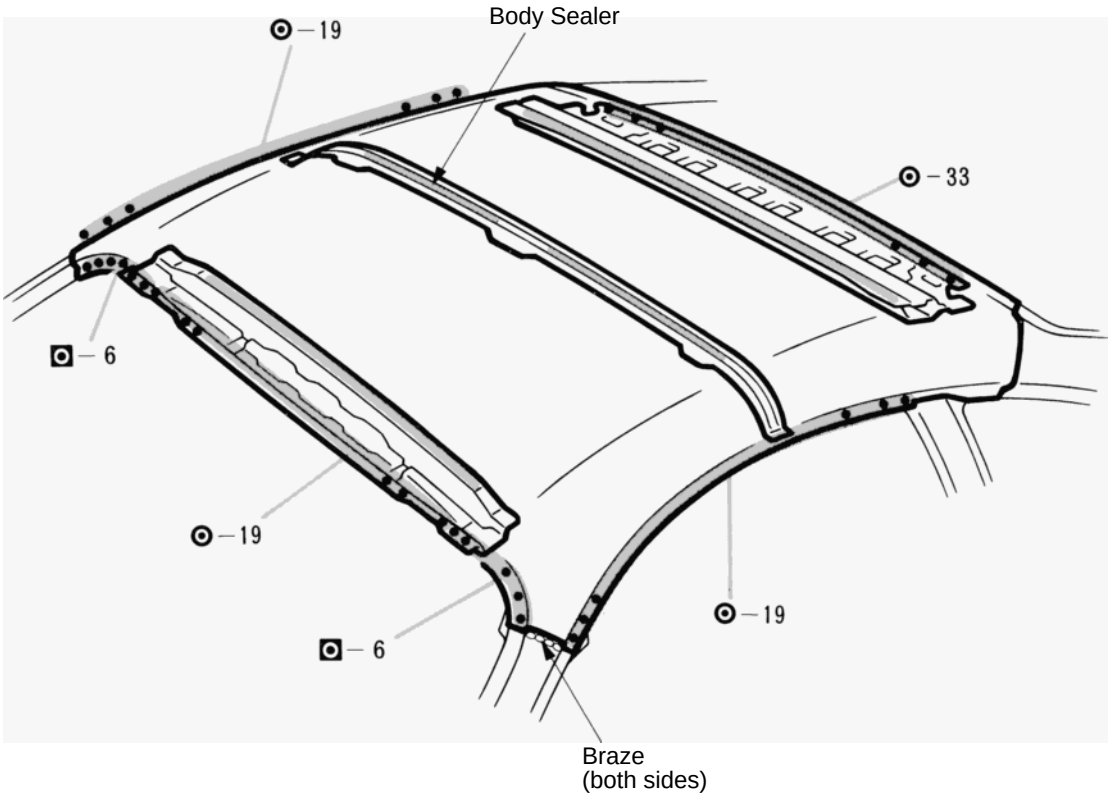

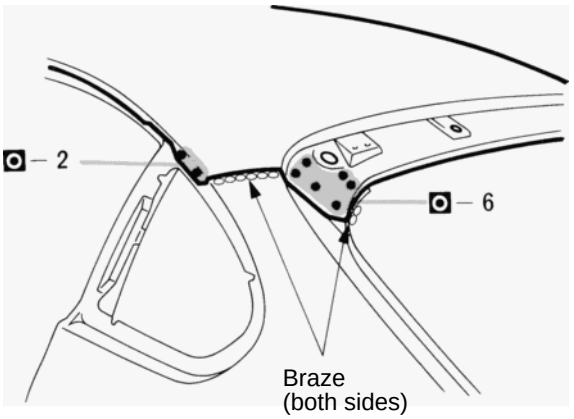

1. Before temporarily installing the new parts, apply body sealer to the windshield header panel, roof panel reinforcement and back door opening frame.

HINT:

1) Apply just enough sealer for the new parts to make contact.

2) For other sealing points, refer to Section AR.

2. Braze the front body pillar and quarter panel connection.

HINT: Before performing these operations, place a wet rag on the roof panel to protect it from damage.

RUST-RESIST ANT SHEET STEEL PARTS

Rust-Resistant Sheet Steel have zinc, tin or aluminum etc, plating over the base metal surface in order to improve the corrosion resistance of the sheet metal. For the vehicle's body panels, galvannealed sheet steel is widely used.
Body panel on TOYOTA models are made of two different galvannealed sheet steel. The ordinary galvannealed sheet steel has a zinc-iron alloy plating over the base metal surface. Zinc-iron alloy double-layer galvannealed sheet steel has zinc-iron alloy plating on both the outside and the back surface, plus a further iron-rich zinc-iron alloy plating which has good paint adhesion. These two galvannealed sheet steels are used selectively according to need.

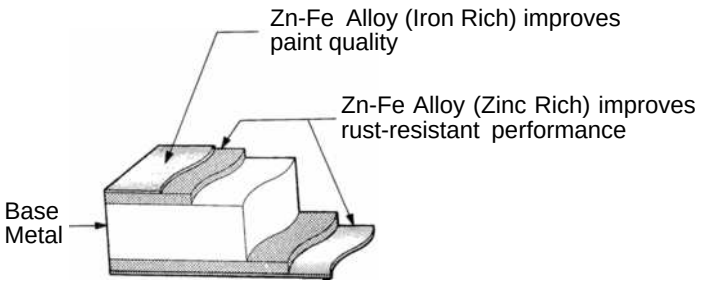

Excelite II

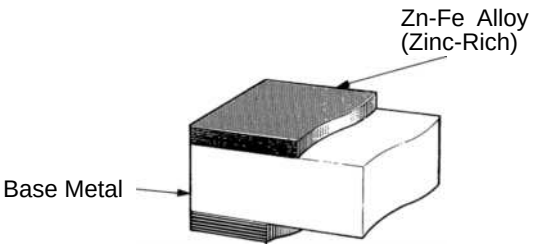

Galvannealed Sheet Steel

The handing of Rust-Resistant Sheet Steel is the same as for ordinary sheet steel, but the following should be observed.

1. Panel Welding: The paint as well as the zinc portion must be removed completely from the welding area to guarantee good welding integrity.
2. Anti-Rust Treatment: Since the zinc plating is lost after welding, anti-rust treatment of the welded area must be thoroughly performed (refer to section AR).

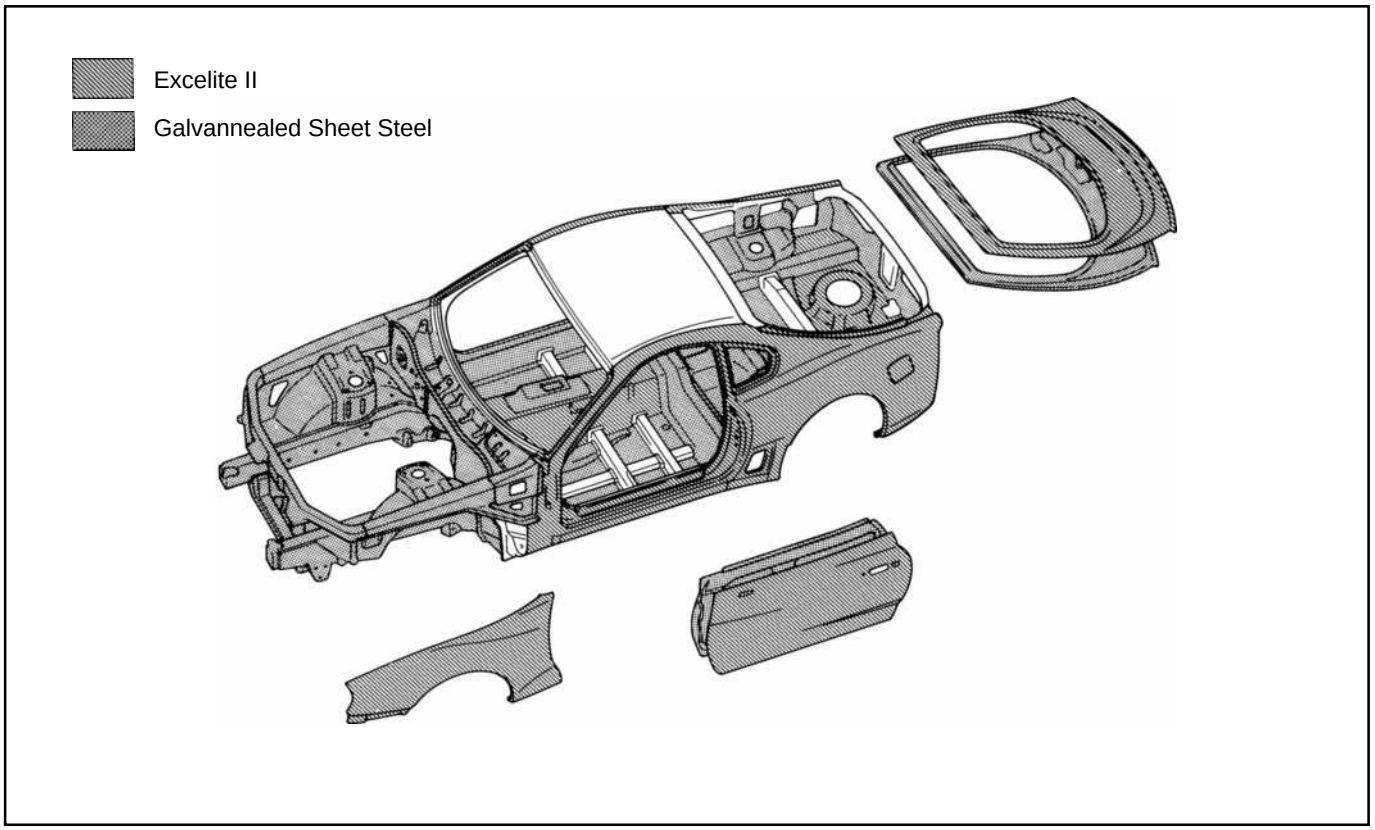

COLLISION REPAIR INFORMATION

FOR THE TOYOTA DEALER

TITLE: SCRATCH–RESISTANT PAINT

SECTION: REFINISH BULLETIN #78

MODELS: JAPAN PRODUCED VEHICLES (AS LISTED)

DATE: AUGUST 1997

Some Toyota models produced in Japan are finished with a Scratch–Resistant paint technology. This type of coating provides improved resistance to minor scratching. Vehicles produced with this type of coating can be identified by referring to the chart below and by the Vehicle Identification Number (VIN). The **first** character in the VIN of Japan–built vehicles is a “J” (J=Japan).

NOTE: U.S. manufactured vehicles do **not** use this type of paint technology.

Model	Color Code	Date of Introduction
Camry	202	August 1992
Celica	202	August 1991
MR2	202	December 1989
LandCruiser	202	December 1995
RAV4	202	January 1995
Supra	202	April 1993

Color code 202 (Black) is a single–stage paint as applied by the factory. During refinish work however, two–stage (basecoat/clearcoat) refinishing utilizing the appropriate materials is recommended.

REFINISH RECOMMENDATIONS

Refinish materials that provide similar scratch–resistant qualities have been developed by your respective paint vendor. Listed are the refinish materials (basecoat, clearcoat, reducer, hardener/activator) recommended by Toyota and your paint vendor for refinishing vehicles originally manufactured with scratch–resistant paint.

Manufacturer	Basecoat	Clearcoat	Reducer	Hardener/Activator
Akzo–Nobel	Autobase	Autocoat LV HS	Autocoat LV	Hardener HS–BSR
BASF	54/55 line	923–43	none	929–76
DuPont	Chroma–base	9700S	1085S	3575S
ICI Autocolor	2K/Aquabase	P190–639	P850–1692/3/4	P210–839
PPG	Deltron 2000 Global BC	DCU 2021 D894	DT–Series D807	DCX8 D897
Sherwin–Williams **Martin Senour**	Ultra–7000 Tec/Base	CC–830 HS 8895 HS	CCR–837 8879	UH–100 HS 8874
Spies–Hecker	Permacron 293/295	Permasolid 8030 HS	Permacron Series	3120 Super Hardener
Standox	Basecoat	2K HS Clear	2K Thinner	Scratch–Resistant

Check with your paint vendor for VOC compliance information and product availability.

Contact your paint vendor for additional information on application procedures, material availability and VOC compliant materials. For paint vendor technical service information telephone numbers, refer to Collision Repair Information Bulletin #77.

POLISHING TIPS

Follow paint vendor recommended baking or air dry times prior to sanding and polishing.

Since this type of paint technology resists scratches, it is important to understand that sanding and polishing to remove dirt nibs may require additional time.

Use a fine grit sand paper (2000–2500 grit) soaked in a soapy water solution for a minimum of 1–hour (overnight preferred) to prevent deep scratches and use polishing materials designed for urethane–type clearcoats.

SILENCER SHEET INSTALLATION AREAS

Thickness of Asphalt Sheet

..... 1.5 mm (0.059 in.)

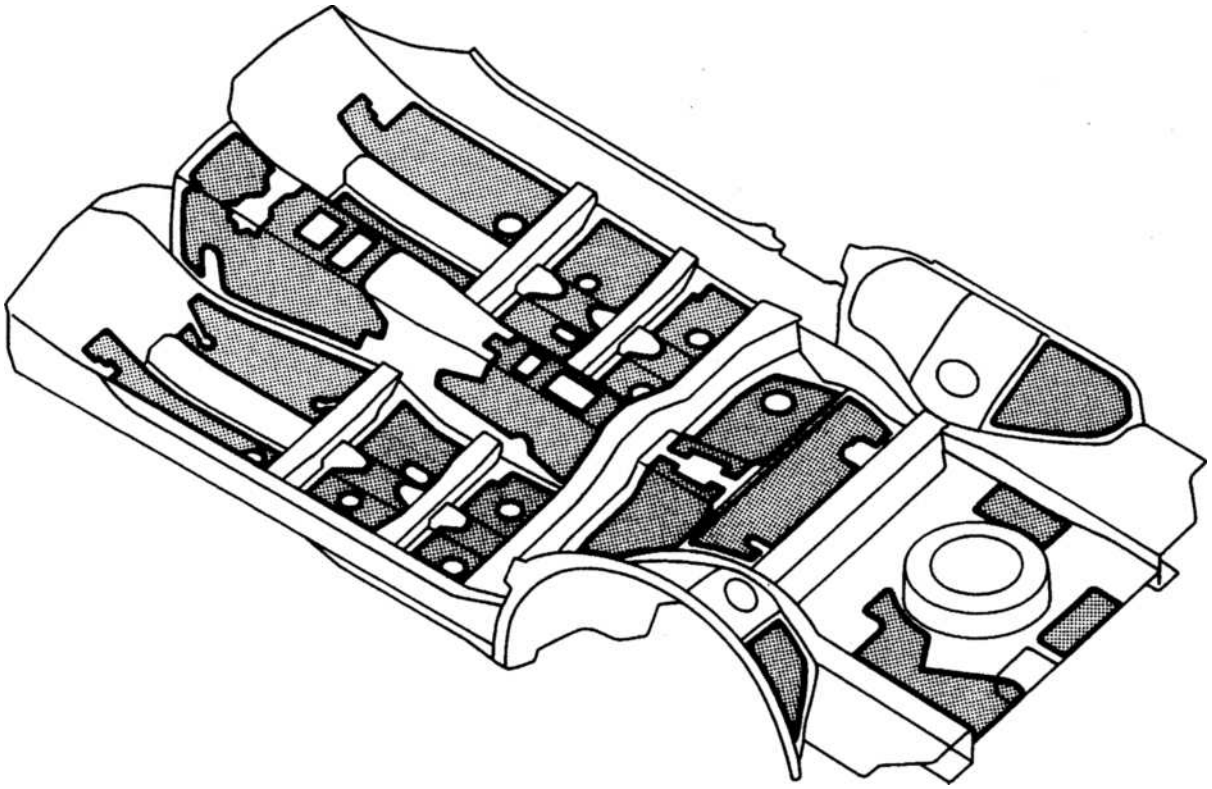

COLLISION REPAIR INFORMATION

FOR THE TOYOTA DEALER

TITLE: SRS AIRBAG COMPONENT REPLACEMENT

SECTION: ELECTRICAL BULLETIN #79

MODELS: ALL

DATE: AUGUST 1997

After an airbag has been deployed during a collision, it will be necessary to replace certain components of the airbag system. Technicians can identify these parts by using the attached matrix.

If the airbag does not deploy, yet the combination meter (airbag warning light) stays on for more that 10 seconds after the key is turned to the “ACC” or “ON” position, it is necessary to perform a diagnostic test. Always refer to the Toyota repair manual for the correct repair procedure.

The attached information includes:

- A matrix indicating components requiring replacement (pages 2–4).
- Parts replacement note (page 5).
- An example repair manual page outlining the diagnostic procedure available in each model specific repair manual (page 6).

Toyota recommends the use of electrical repair kit (P/N 00002–04200–01) for any wiring repairs. This kit includes a selection of numerous repair connectors, terminal ends, a repair procedures manual and special tools specific to Toyota. The ***replacement*** electrical wire and connector (from the wire harness to the front sensors) is P/N 82988–24010.

Toyota also offers a video package which shows the operation of the SRS airbag system (P/N 00401–42994).

CAUTION: SRS Airbag service work can be performed only AFTER 90 SECONDS from the time the ignition switch is turned to the “lock” position and the negative (–) terminal cable is disconnected from the battery.

NOTE: PLEASE ROUTE THIS BULLETIN TO YOUR COLLISION REPAIR CENTER MANAGER!

TERCEL	97	N/A	REPLACE	REPLACE	REPLACE	REPLACE	REPLACE	REPLACE	SEE NOTE 4
TERCEL	96	N/A	REPLACE	REPLACE	REPLACE	REPLACE	REPLACE	REPLACE	SEE NOTE 4
TERCEL	95	N/A	REPLACE	SEE NOTE 5	SEE NOTE 5	REPLACE	REPLACE	SEE NOTE 1	SEE NOTE 4
TERCEL	93-94	R&R BOTH	REPLACE	SEE NOTE 5	SEE NOTE 5	REPLACE	N/A	N/A	SEE NOTE 4
PASEO	97	N/A	REPLACE	REPLACE	REPLACE	REPLACE	REPLACE	REPLACE	SEE NOTE 4
PASEO	96	N/A	REPLACE	REPLACE	REPLACE	REPLACE	REPLACE	REPLACE	SEE NOTE 4
PASEO	93-95	R&R BOTH	REPLACE	SEE NOTE 5	SEE NOTE 5	REPLACE	N/A	N/A	SEE NOTE 4
PASEO	92	N/A	N/A	N/A	N/A	N/A	N/A	N/A	N/A
COROLLA	97	N/A	REPLACE	REPLACE	REPLACE	REPLACE	REPLACE	REPLACE	SEE NOTE 4
COROLLA	96	N/A	REPLACE	REPLACE	REPLACE	REPLACE	REPLACE	REPLACE	SEE NOTE 4
COROLLA	94-95	R&R BOTH	REPLACE	SEE NOTE 5	SEE NOTE5	REPLACE	REPLACE	SEE NOTE 3	SEE NOTE 4
COROLLA	93	R&R BOTH	REPLACE	SEE NOTE 5	SEE NOTE 5	N/A	N/A	N/A	N/A
CELICA	97	R&R BOTH	REPLACE	REPLACE	REPLACE	REPLACE	REPLACE	REPLACE	SEE NOTE 4
CELICA	96	R&R BOTH	REPLACE	REPLACE	REPLACE	REPLACE	REPLACE	REPLACE	SEE NOTE 4
CELICA	94-95	R&R BOTH	REPLACE	SEE NOTE 5	SEE NOTE 5	REPLACE	REPLACE	SEE NOTE 1	SEE NOTE 4
CELICA	90-93	R&R BOTH	SEE NOTE 6	SEE NOTE 5	SEE NOTE 5	REPLACE	N/A	REPLACE	SEE NOTE 4
MR2	94-95	R&R BOTH	REPLACE	SEE NOTE 5	SEE NOTE 5	REPLACE	REPLACE	SEE NOTE 2	SEE NOTE 4
MR2	91-93	R&R BOTH	SEE NOTE 6	SEE NOTE 5	SEE NOTE 5	REPLACE	N/A	N/A	SEE NOTE 4
CAMRY	97	N/A	REPLACE	REPLACE	REPLACE	REPLACE	REPLACE	REPLACE	SEE NOTE 4
CAMRY	96	R&R BOTH	REPLACE	REPLACE	REPLACE	REPLACE	REPLACE	REPLACE	SEE NOTE 4
CAMRY	94-95	R&R BOTH	REPLACE	SEE NOTE 5	SEE NOTE 5	REPLACE	REPLACE	SEE NOTE 2	SEE NOTE 4

CAMRY	92-93	R&R BOTH	REPLACE	SEE NOTE 5	SEE NOTE 5	REPLACE	N/A	N/A	SEE NOTE 4
SUPRA	97	N/A	REPLACE	REPLACE	REPLACE	REPLACE	REPLACE	REPLACE	SEE NOTE 4
SUPRA	96	R&R BOTH	REPLACE	REPLACE	REPLACE	REPLACE	REPLACE	REPLACE	SEE NOTE 4
SUPRA	93-95	R&R BOTH	REPLACE	SEE NOTE 5	SEE NOTE 5	REPLACE	REPLACE	REPLACE	SEE NOTE 4
SUPRA	90-92	R&R BOTH	SEE NOTE 6	SEE NOTE 5	SEE NOTE 5	REPLACE	REPLACE	N/A	SEE NOTE 4
AVALON	97	N/A	REPLACE	REPLACE	REPLACE	REPLACE	REPLACE	REPLACE	SEE NOTE 4A
AVALON	96	N/A	REPLACE	REPLACE	REPLACE	REPLACE	REPLACE	REPLACE	SEE NOTE 4A
AVALON	95	N/A	REPLACE	SEE NOTE 5	SEE NOTE 5	REPLACE	REPLACE	SEE NOTE 3A	SEE NOTE 4A
PREVIA	97	N/A	REPLACE	REPLACE	REPLACE	REPLACE	REPLACE	REPLACE	SEE NOTE 4A
PREVIA	96	N/A	REPLACE	REPLACE	REPLACE	REPLACE	REPLACE	REPLACE	SEE NOTE 4A
PREVIA	94-95	R&R BOTH	REPLACE	SEE NOTE 5	SEE NOTE 5	REPLACE	REPLACE	SEE NOTE 3	SEE NOTE 4
PREVIA	92-93	R&R BOTH	REPLACE	SEE NOTE 5	SEE NOTE 5	REPLACE	REPLACE		SEE NOTE 4
4 RUNNER	97	N/A	REPLACE	REPLACE	REPLACE	REPLACE	REPLACE	REPLACE	SEE NOTE 4A
4 RUNNER	96	N/A	REPLACE	REPLACE	REPLACE	REPLACE	REPLACE	REPLACE	SEE NOTE 4A
4 RUNNER	90-95	N/A	N/A	N/A	N/A	N/A	N/A	N/A	N/A
LAND CRUISER	97	N/A	REPLACE	REPLACE	REPLACE	REPLACE	REPLACE	REPLACE	SEE NOTE 4A
LAND CRUISER	96	N/A	REPLACE	REPLACE	REPLACE	REPLACE	REPLACE	REPLACE	SEE NOTE 4A
LAND CRUISER	95	N/A	REPLACE	SEE NOTE 5	SEE NOTE 5	REPLACE	REPLACE	SEE NOTE 3A	SEE NOTE 4A
T100	97	R&R BOTH	REPLACE	REPLACE	REPLACE	REPLACE	REPLACE	REPLACE	SEE NOTE 4
T100	96	R&R BOTH	REPLACE	REPLACE	REPLACE	REPLACE	REPLACE	REPLACE	SEE NOTE 4

T-100	94-95	R&R BOTH	REPLACE	SEE NOTE 5	SEE NOTE 5	REPLACE	REPLACE	N/A	SEE NOTE 4
TACOMA	97	N/A	REPLACE	REPLACE	REPLACE	REPLACE	REPLACE	REPLACE	SEE NOTE 4B
TACOMA	96	N/A	REPLACE	REPLACE	REPLACE	REPLACE	REPLACE	REPLACE	SEE NOTE 4B
TACOMA	95	N/A	REPLACE	SEE NOTE 5	SEE NOTE 5	REPLACE	N/A	N/A	SEE NOTE 4B
RAV4	97	N/A	REPLACE	REPLACE	REPLACE	REPLACE	REPLACE	REPLACE	SEE NOTE 4
RAV4	96	N/A	REPLACE	REPLACE	REPLACE	REPLACE	REPLACE	REPLACE	SEE NOTE 4

Component Replacement Notes

Note 1 – Replace the following items:
- Instrument panel
- Center console bracket support

Note 2 – Replace the following items if deformed:
- Instrument panel
- Instrument panel reinforcement
- Glove compartment
- Glove compartment door

Note 3 – Replace the following items:
- Instrument panel reinforcement
- Glove compartment
- Glove compartment door

Note 3a – Replace the following items:
- Instrument panel
- Instrument panel reinforcement
- Glove compartment door

Note 4 – If the SRS wire harness assembly is damaged:
- Use a repair wire specially designed for use in the SRS airbag system at the front sensor (P/N 82988–24010).
  OR
- Replace the entire wire harness assembly.

Note 4a – Replace wire harness if damaged.
- Repair only if wire harness connector is damaged.

Note 4b – Replace wire harness if damaged.

Note 5 – Replace the following items if deformed:
- Steering wheel
- Spiral cable

Note 6 – Replace center airbag sensor assembly if:
- Center airbag sensor assembly has been found faulty in troubleshooting
- Center airbag sensor assembly has been found faulty during the following checks:
  1. Deformation of the bracket or case
  2. Vinyl seal broken
  3. Damage to connector
- Center airbag sensor assembly has been dropped.

This is an example from a Toyota Repair Manual. Always refer to the repair manual applicable to the model and year vehicle you are diagnosing.

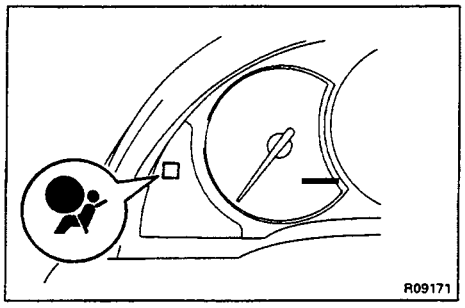

DIAGNOSIS INSPECTION

SRS warning light check

(a) Turn the ignition switch to ACC or ON and check that the SRS warning light lights up.

(b) Check that the SRS warning light goes out after approx. 6 seconds.

HINT:

- When the ignition switch is at ACC or ON and the SRS warning light remains on or flashes, the center airbag sensor assembly has detected a malfunction code.
- If, after approx. 6 seconds have elapsed, the SRS warning light sometimes lights up or the SRS warning light lights up even when the ignition switch is OFF, a short in the SRS warning light circuit can be considered likely. Proceed to "SRS warning light system malfunction" on page RS-69, 70.

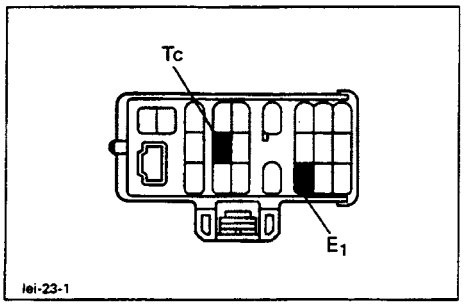

DTC check

Using diagnosis check wire:

1. OUTPUT DTC

(a) Turn the ignition switch to ACC or ON position and wait approx. 20 seconds.

(b) Using SST, connect terminals Tc and E1 of the DLC1.

SST 09843-18020

NOTICE: Never make a mistake with the terminal connection position as this will cause a malfunction.

COLLISION REPAIR INFORMATION

FOR THE TOYOTA DEALER

TITLE: SRS AIRBAG COMPONENT REPLACEMENT

SECTION: ELECTRICAL BULLETIN #83

MODELS: ALL

DATE: MAY 1998

After an airbag has been deployed during a collision, it will be necessary to replace certain components of the SRS system. Technicians can identify these parts by using the attached matrix.

If, after the vehicle has been completely repaired, the airbag warning light stays on for more than 6 seconds while the key is turned to the “ACC” or “ON” position, it is necessary to perform a diagnostic test. Always refer to the model–specific Toyota Repair Manual for the correct repair procedure.

The attached information includes:

- A matrix indicating components requiring replacement (page 3).
- Parts replacement notes (page 4).
- An example Repair Manual page outlining the diagnostic procedure available in each model–specific Repair Manual (page 2).

On some vehicles the front sensors may be replaced. Please refer to the model–specific repair manual concerning front airbag sensor replacement requirements before performing this repair. Three part numbers are available for ***replacement*** electrical wire and connectors from the wire harness to the front SRS sensors. They are P/N 82988–24010, 82988–50010, and 82988–33010.

Toyota also offers a video package which outlines the operation of the SRS airbag system (P/N 00401–42994).

NOTE: PLEASE ROUTE THIS BULLETIN TO YOUR COLLISION REPAIR CENTER MANAGER!

CAUTION: SRS Airbag service work can be performed only AFTER 90 SECONDS from the time the ignition switch is turned to the "lock" position and the negative (–) terminal cable is disconnected from the battery.

This is an example from a Toyota Repair Manual. Always refer to the repair manual applicable to the model and year of the vehicle you are diagnosing.

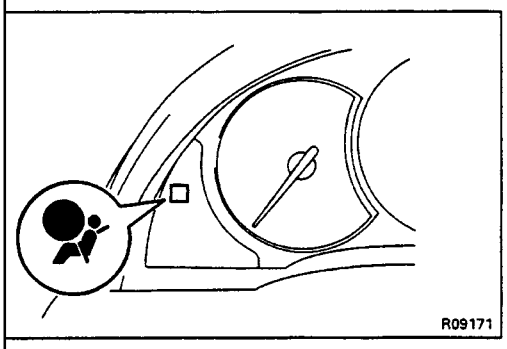

DIAGNOSIS INSPECTION

SRS warning light check

(a) Turn the ignition switch to ACC or ON and check that the SRS warning light lights up.

(b) Check that the SRS warning light goes out after approx. 6 seconds.

HINT:

- When the ignition switch is at ACC or ON and the SRS warning light remains on or flashes, the center airbag sensor assembly has detected a malfunction code.
- If, after approx. 6 seconds have elapsed, the SRS warning light sometimes lights up or the SRS warning light lights up even when the ignition switch is OFF, a short in the SRS warning light circuit can be considered likely. Proceed to "SRS warning light system malfunction" on page RS-69, 70.

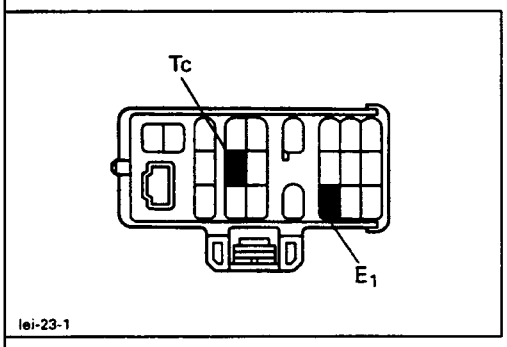

DTC check

Using diagnosis check wire:

1. OUTPUT DTC

(a) Turn the ignition switch to ACC or ON position and wait approx. 20 seconds.

(b) Using SST, connect terminals Tc and E1 of the DLC1.

SST 09843-18020

NOTICE: Never make a mistake with the terminal connection position as this will cause a malfunction.

MODEL	YEAR	STEERING WHEEL PAD	SPIRAL CABLE	STEERING WHEEL	PASSENGER AIRBAG	INSTRUMENT PANEL	FR. IMPACT SENSORS (BOTH)	AIRBAG SENSOR ASSEMBLY	WIRE HARNESS	SIDE IMPACT AIRBAGS	SIDE IMPACT SENSORS	SEATBELT PRETENSIONER
TERCEL	93-94	X	*4	*4			X	X	*3			
	95	X	*4	*4	X	*1		X	*3A			
	96-97	X	*4	*4	X	*2a		X	*3A			
	98	X	*4	*4	X	*2a		X	*3A			X
PASEO	93-95	X	*4	*4			X	X	*3			
	96-97	X	*4	*4	X	*2a		X	*3A			
COROLLA	93	X	*4	*4			X	X	*3			
	94-95	X	*4	*4	X	*2	X	X	*3			
	96-97	X	*4	*4	X	*2a		X	*3A			
	98	X	*4	*4	X	*2a	X	X	*3A	*6	*6	X
CELICA	90-93	X	*4	*4			X	*5	*3			
	94-95	X	*4	*4	X	*1	X	X	*3			
	96-97	X	*4	*4	X	*2a	X	X	*3			
	98	X	*4	*4	X	*2		X	*3A			
CAMRY	92-93	X	*4	*4			X	X	*3			
	94-95	X	*4	*4	X	*2	X	X	*3			
	96	X	*4	*4	X	*2a	X	X	*3			
	97	X	*4	*4	X	*2a		X	*3A			
	98	X	*4	*4	X	*2a		X	*3A	*6	*6	X
SUPRA	90-92	X	*4	*4			X	*5	*3			
	93-96	X	*4	*4	X	*2a	X	X	*3			
	97-98	X	*4	*4	X	*2		X	*3A			
MR2	91-93	X	*4	*4			X	*5	*3			
	94-95	X	*4	*4	X	*2	X	X	*3			
AVALON	95	X	*4	*4	X	*2		X	*3A			
	96-97	X	*4	*4	X	*2a		X	*3A			
	98	X	*4	*4	X	*2		X	*3A	*6	*6	X
PREVIA	92-93	X	*4	*4			X	X	*3			
	94-95	X	*4	*4	X	*2	X	X	*3			
	96-97	X	*4	*4	X	*2a		X	*3A			
SIENNA	98	X	*4	*4	X	*2	X	X	*3A			X
RAV4	96-97	X	*4	*4	X	*2a		X	*3A			
	98	X	*4	*4	X	*2	X	X	*3			X
T100	94-98	X	*4	*4			X	X	*3			
TACOMA	95-96	X	*4	*4				X	*3A			
	97	X	*4	*4	X	*2		X	*3A			
	98	X	*4	*4	X / *7	*2		X	*3A			
4 RUNNER	96-98	X	*4	*4	X	*2		X	*3A			
LAND CRUISER	95-97	X	*4	*4	X	*2		X	*3A			
	98	X	*4	*4	X	*2	X	X	*3A			X

Component Replacement Notes

Note 1 – Visually inspect and replace the following items if deformed:
Instrument panel and center console bracket support

Note 2 – Visually inspect and replace the following items if deformed:

Instrument panel and Instrument panel reinforcement

Glove compartment and glove compartment door

Note 2a – Same as note 2 without involving the glove compartment.

Note 3 – If the SRS wire harness is damaged only at the connectors to the front sensors:
Use a repair wire specially designed for use in the SRS airbag system at the front sensor (PN 82988–24010/50010/33010).
OR

Replace the entire wire harness assembly.

Note 3a – Replace the entire wire harness if damaged or has been found to be faulty during troubleshooting.

Note 4 – Replace the following items if deformed or if diagnostic tests show a fault:
Steering wheel (If the horn button contact plate has been deformed, never attempt to repair it–always replace the steering wheel).

Spiral cable

Note 5 – Replace center airbag sensor assembly if:
Center airbag sensor assembly has been found faulty in troubleshooting.

Center airbag sensor assembly shows evidence of the following:

1. Deformation of the bracket or case
2. Vinyl seal broken
3. Damage to connector

Center airbag sensor assembly has been dropped.

Note 6 – Replace side impact sensors and side airbag assembly with seat cover if deployed. Side airbag circuits are independent from each other, and one side may deploy while the other does not.

Note 7 – 1998 Tacoma is equipped with a passenger airbag cutoff switch. If the switch is "OFF" when impact occurs, replace the switch. If the switch is in the "ON" position when impact occurs, and the passenger airbag deploys, check the switch as directed by the Repair Manual.

COLLISION REPAIR INFORMATION

FOR THE TOYOTA DEALER

TITLE: SRS AIRBAG COMPONENT REPLACEMENT

SECTION: ELECTRICAL BULLETIN #79

MODELS: ALL

DATE: AUGUST 1997

After an airbag has been deployed during a collision, it will be necessary to replace certain components of the airbag system. Technicians can identify these parts by using the attached matrix.

If the airbag does not deploy, yet the combination meter (airbag warning light) stays on for more that 10 seconds after the key is turned to the “ACC” or “ON” position, it is necessary to perform a diagnostic test. Always refer to the Toyota repair manual for the correct repair procedure.

The attached information includes:

- A matrix indicating components requiring replacement (pages 2–4).
- Parts replacement note (page 5).
- An example repair manual page outlining the diagnostic procedure available in each model specific repair manual (page 6).

Toyota recommends the use of electrical repair kit (P/N 00002–04200–01) for any wiring repairs. This kit includes a selection of numerous repair connectors, terminal ends, a repair procedures manual and special tools specific to Toyota. The ***replacement*** electrical wire and connector (from the wire harness to the front sensors) is P/N 82988–24010.

Toyota also offers a video package which shows the operation of the SRS airbag system (P/N 00401–42994).

CAUTION: SRS Airbag service work can be performed only AFTER 90 SECONDS from the time the ignition switch is turned to the “lock” position and the negative (–) terminal cable is disconnected from the battery.

NOTE: PLEASE ROUTE THIS BULLETIN TO YOUR COLLISION REPAIR CENTER MANAGER!

TERCEL	97	N/A	REPLACE	REPLACE	REPLACE	REPLACE	REPLACE	REPLACE	SEE NOTE 4
TERCEL	96	N/A	REPLACE	REPLACE	REPLACE	REPLACE	REPLACE	REPLACE	SEE NOTE 4
TERCEL	95	N/A	REPLACE	SEE NOTE 5	SEE NOTE 5	REPLACE	REPLACE	SEE NOTE 1	SEE NOTE 4
TERCEL	93-94	R&R BOTH	REPLACE	SEE NOTE 5	SEE NOTE 5	REPLACE	N/A	N/A	SEE NOTE 4
PASEO	97	N/A	REPLACE	REPLACE	REPLACE	REPLACE	REPLACE	REPLACE	SEE NOTE 4
PASEO	96	N/A	REPLACE	REPLACE	REPLACE	REPLACE	REPLACE	REPLACE	SEE NOTE 4
PASEO	93-95	R&R BOTH	REPLACE	SEE NOTE 5	SEE NOTE 5	REPLACE	N/A	N/A	SEE NOTE 4
PASEO	92	N/A	N/A	N/A	N/A	N/A	N/A	N/A	N/A
COROLLA	97	N/A	REPLACE	REPLACE	REPLACE	REPLACE	REPLACE	REPLACE	SEE NOTE 4
COROLLA	96	N/A	REPLACE	REPLACE	REPLACE	REPLACE	REPLACE	REPLACE	SEE NOTE 4
COROLLA	94-95	R&R BOTH	REPLACE	SEE NOTE 5	SEE NOTE5	REPLACE	REPLACE	SEE NOTE 3	SEE NOTE 4
COROLLA	93	R&R BOTH	REPLACE	SEE NOTE 5	SEE NOTE 5	N/A	N/A	N/A	N/A
CELICA	97	R&R BOTH	REPLACE	REPLACE	REPLACE	REPLACE	REPLACE	REPLACE	SEE NOTE 4
CELICA	96	R&R BOTH	REPLACE	REPLACE	REPLACE	REPLACE	REPLACE	REPLACE	SEE NOTE 4
CELICA	94-95	R&R BOTH	REPLACE	SEE NOTE 5	SEE NOTE 5	REPLACE	REPLACE	SEE NOTE 1	SEE NOTE 4
CELICA	90-93	R&R BOTH	SEE NOTE 6	SEE NOTE 5	SEE NOTE 5	REPLACE	N/A	REPLACE	SEE NOTE 4
MR2	94-95	R&R BOTH	REPLACE	SEE NOTE 5	SEE NOTE 5	REPLACE	REPLACE	SEE NOTE 2	SEE NOTE 4
MR2	91-93	R&R BOTH	SEE NOTE 6	SEE NOTE 5	SEE NOTE 5	REPLACE	N/A	N/A	SEE NOTE 4
CAMRY	97	N/A	REPLACE	REPLACE	REPLACE	REPLACE	REPLACE	REPLACE	SEE NOTE 4
CAMRY	96	R&R BOTH	REPLACE	REPLACE	REPLACE	REPLACE	REPLACE	REPLACE	SEE NOTE 4
CAMRY	94-95	R&R BOTH	REPLACE	SEE NOTE 5	SEE NOTE 5	REPLACE	REPLACE	SEE NOTE 2	SEE NOTE 4

CAMRY	92-93	R&R BOTH	REPLACE	SEE NOTE 5	SEE NOTE 5	REPLACE	N/A	N/A	SEE NOTE 4
SUPRA	97	N/A	REPLACE	REPLACE	REPLACE	REPLACE	REPLACE	REPLACE	SEE NOTE 4
SUPRA	96	R&R BOTH	REPLACE	REPLACE	REPLACE	REPLACE	REPLACE	REPLACE	SEE NOTE 4
SUPRA	93-95	R&R BOTH	REPLACE	SEE NOTE 5	SEE NOTE 5	REPLACE	REPLACE	REPLACE	SEE NOTE 4
SUPRA	90-92	R&R BOTH	SEE NOTE 6	SEE NOTE 5	SEE NOTE 5	REPLACE	REPLACE	N/A	SEE NOTE 4
AVALON	97	N/A	REPLACE	REPLACE	REPLACE	REPLACE	REPLACE	REPLACE	SEE NOTE 4A
AVALON	96	N/A	REPLACE	REPLACE	REPLACE	REPLACE	REPLACE	REPLACE	SEE NOTE 4A
AVALON	95	N/A	REPLACE	SEE NOTE 5	SEE NOTE 5	REPLACE	REPLACE	SEE NOTE 3A	SEE NOTE 4A
PREVIA	97	N/A	REPLACE	REPLACE	REPLACE	REPLACE	REPLACE	REPLACE	SEE NOTE 4A
PREVIA	96	N/A	REPLACE	REPLACE	REPLACE	REPLACE	REPLACE	REPLACE	SEE NOTE 4A
PREVIA	94-95	R&R BOTH	REPLACE	SEE NOTE 5	SEE NOTE 5	REPLACE	REPLACE	SEE NOTE 3	SEE NOTE 4
PREVIA	92-93	R&R BOTH	REPLACE	SEE NOTE 5	SEE NOTE 5	REPLACE	REPLACE		SEE NOTE 4
4 RUNNER	97	N/A	REPLACE	REPLACE	REPLACE	REPLACE	REPLACE	REPLACE	SEE NOTE 4A
4 RUNNER	96	N/A	REPLACE	REPLACE	REPLACE	REPLACE	REPLACE	REPLACE	SEE NOTE 4A
4 RUNNER	90-95	N/A	N/A	N/A	N/A	N/A	N/A	N/A	N/A
LAND CRUISER	97	N/A	REPLACE	REPLACE	REPLACE	REPLACE	REPLACE	REPLACE	SEE NOTE 4A
LAND CRUISER	96	N/A	REPLACE	REPLACE	REPLACE	REPLACE	REPLACE	REPLACE	SEE NOTE 4A
LAND CRUISER	95	N/A	REPLACE	SEE NOTE 5	SEE NOTE 5	REPLACE	REPLACE	SEE NOTE 3A	SEE NOTE 4A
T100	97	R&R BOTH	REPLACE	REPLACE	REPLACE	REPLACE	REPLACE	REPLACE	SEE NOTE 4
T100	96	R&R BOTH	REPLACE	REPLACE	REPLACE	REPLACE	REPLACE	REPLACE	SEE NOTE 4

T-100	94-95	R&R BOTH	REPLACE	SEE NOTE 5	SEE NOTE 5	REPLACE	REPLACE	N/A	SEE NOTE 4
TACOMA	97	N/A	REPLACE	REPLACE	REPLACE	REPLACE	REPLACE	REPLACE	SEE NOTE 4B
TACOMA	96	N/A	REPLACE	REPLACE	REPLACE	REPLACE	REPLACE	REPLACE	SEE NOTE 4B
TACOMA	95	N/A	REPLACE	SEE NOTE 5	SEE NOTE 5	REPLACE	N/A	N/A	SEE NOTE 4B
RAV4	97	N/A	REPLACE	REPLACE	REPLACE	REPLACE	REPLACE	REPLACE	SEE NOTE 4
RAV4	96	N/A	REPLACE	REPLACE	REPLACE	REPLACE	REPLACE	REPLACE	SEE NOTE 4

Component Replacement Notes

Note 1 – Replace the following items:
- Instrument panel
- Center console bracket support

Note 2 – Replace the following items if deformed:
- Instrument panel
- Instrument panel reinforcement
- Glove compartment
- Glove compartment door

Note 3 – Replace the following items:
- Instrument panel reinforcement
- Glove compartment
- Glove compartment door

Note 3a – Replace the following items:
- Instrument panel
- Instrument panel reinforcement
- Glove compartment door

Note 4 – If the SRS wire harness assembly is damaged:
- Use a repair wire specially designed for use in the SRS airbag system at the front sensor (P/N 82988–24010).
  OR
- Replace the entire wire harness assembly.

Note 4a – Replace wire harness if damaged.
- Repair only if wire harness connector is damaged.

Note 4b – Replace wire harness if damaged.

Note 5 – Replace the following items if deformed:
- Steering wheel
- Spiral cable

Note 6 – Replace center airbag sensor assembly if:
- Center airbag sensor assembly has been found faulty in troubleshooting
- Center airbag sensor assembly has been found faulty during the following checks:
  1. Deformation of the bracket or case
  2. Vinyl seal broken
  3. Damage to connector
- Center airbag sensor assembly has been dropped.

This is an example from a Toyota Repair Manual. Always refer to the repair manual applicable to the model and year vehicle you are diagnosing.

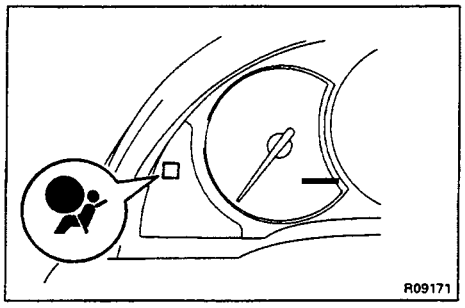

DIAGNOSIS INSPECTION

SRS warning light check

(a) Turn the ignition switch to ACC or ON and check that the SRS warning light lights up.

(b) Check that the SRS warning light goes out after approx. 6 seconds.

HINT:

- When the ignition switch is at ACC or ON and the SRS warning light remains on or flashes, the center airbag sensor assembly has detected a malfunction code.
- If, after approx. 6 seconds have elapsed, the SRS warning light sometimes lights up or the SRS warning light lights up even when the ignition switch is OFF, a short in the SRS warning light circuit can be considered likely. Proceed to "SRS warning light system malfunction" on page RS-69, 70.

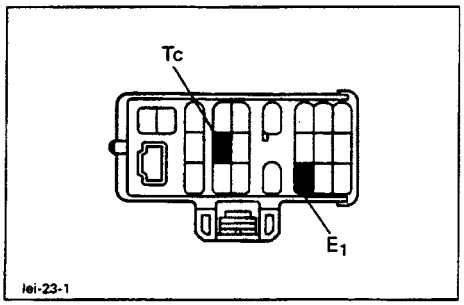

DTC check

Using diagnosis check wire:

1. OUTPUT DTC

(a) Turn the ignition switch to ACC or ON position and wait approx. 20 seconds.

(b) Using SST, connect terminals Tc and E1 of the DLC1.

SST 09843-18020

NOTICE: Never make a mistake with the terminal connection position as this will cause a malfunction.

STANDARD BODY MARKS

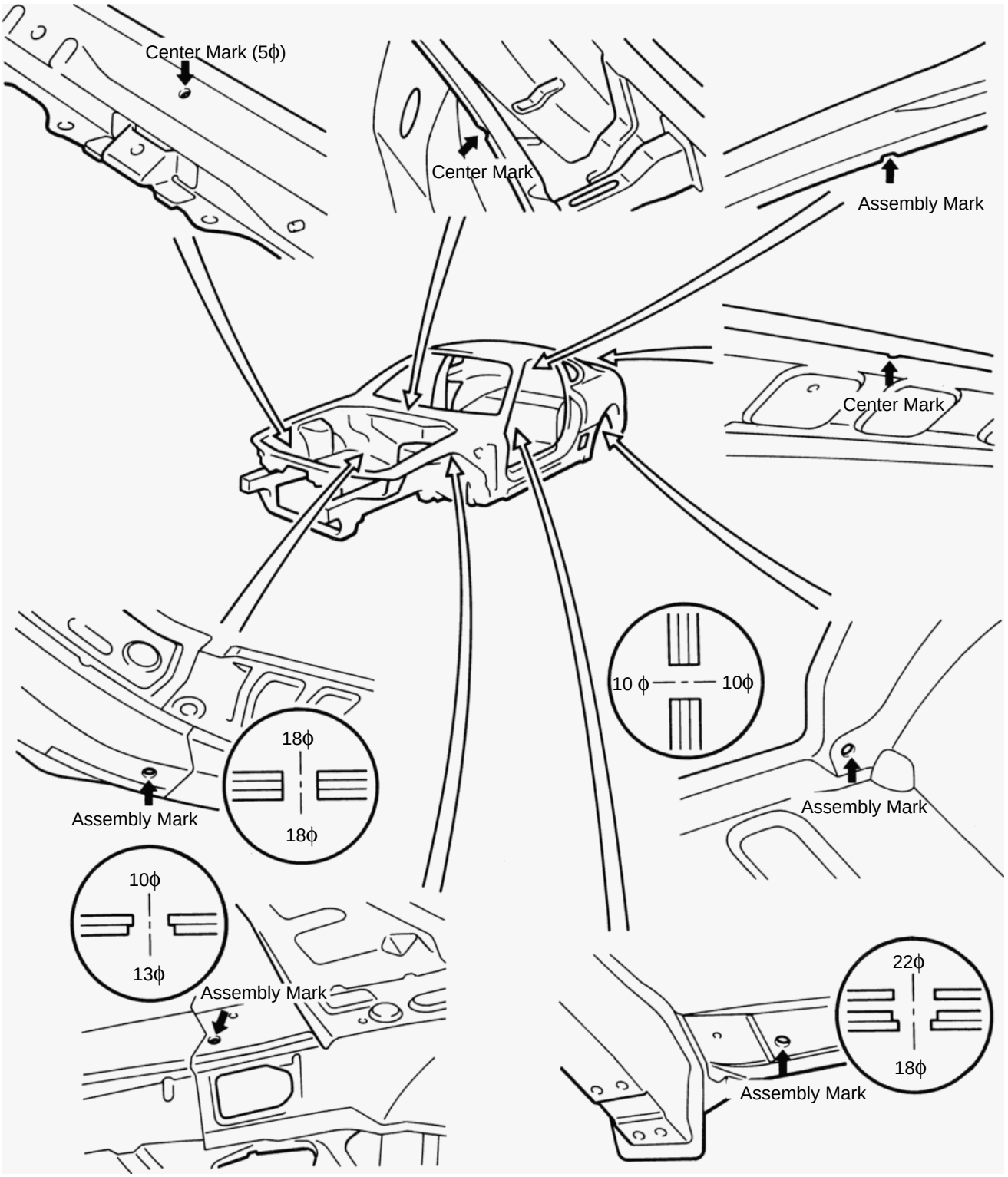

mm	in.
5	0.20
10	0.39
13	0.51
18	0.71
22	0.86

COLLISION REPAIR INFORMATION

FOR THE TOYOTA DEALER

TITLE: TOYOTA COLLISION REPAIR & REFINISH SERVICE PUBLICATIONS

SECTION: GENERAL INFORMATION BULLETIN #75

MODELS: ALL

DATE: JANUARY 1997

Toyota Collision Repair and Refinish Service Publications are an integral part of the Toyota philosophy of “fix it right the first time”. This detailed repair information is designed to speed and simplify repair operations and improve the quality of each repair. For ordering information, please refer to page 5 of this bulletin.

COLLISION REPAIR MANUALS

- Cutting and welding operations
- Body component diagrams and illustrations
- Body panel replacement
- Body dimensions
- Anti–rust treatment
- SRS handling precautions
- Electronic control unit (ECU) locations
- Plastic body part identification

Model	Year	Part Number	Price
AVALON			
Collision Repair Manual	1997–95	00400–BR046	$20.00
CAMRY			
Collision Repair Manual	1997	00400–BR062	20.00
Collision Repair Manual	1996–92	00400–BR032	9.00
Collision Repair Manual–Coupe	1996–94	00400–BR043	9.00
Collision Repair Manual–Wagon	1996–92	00400–BR035	9.00
Collision Repair Manual	1991–87	00400–BRM01–0E	8.95
Collision Repair Manual	1986–83	00400–36433–E	6.95
CELICA			
Collision Repair Manual–Convertible	1997–94	00400–BR048	15.00
Collision Repair Manual	1997–94	00400–BR044	15.00
Collision Repair Manual	1993–90	00400–BR022	6.95
Collision Repair Manual	1989–86	00400–BRM00–1E	8.95
COROLLA			
Collision Repair Manual	1997–93	00400–BR038	15.00
Collision Repair Manual–Sedan	1992–87	00400–BR012	6.95
Collision Repair Manual–All Trac	1992–88	00400–BR014	4.95
Collision Repair Manual–Wagon	1992–88	00400–BR013	4.95
Collision Repair Manual–FX	1988–87	00400–BRM00–6E	4.95
Collision Repair Manual–FF/FR (Front Wheel Drive/Rear Wheel Drive)	1987–83	00400–36434–E	6.95

SERVICE PUBLICATIONS (cont'd)

COLLISION REPAIR MANUALS (cont'd)

Model	Year	Part Number	Price
CRESSIDA			
Collision Repair Manual	1992–89	00400–BR016	$6.95
Collision Repair Manual–Sedan	1992–87	00400–BR012	6.95
Collision Repair Manual–Wagon	1992–88	00400–BR014	4.95
LANDCRUISER			
Collision Repair Manual	1997–93	00400–BR050	15.00
MR2			
Collision Repair Manual	1995–91	00400–BR025	6.95
Collision Repair Manual	1989–85	00400–36440–A	15.00
Collision Repair Manual–T–Roof	1989–87	00400–BRM00–8E	4.95
PASEO			
Collision Repair Manual	1997–96	00400–BR05	15.00
Collision Repair Manual–Convertible	1997	00400–BR065	15.00
Collision Repair Manual	1995–92	00400–BR030	9.00
PREVIA			
Collision Repair Manual	1997–91	00400–BR027	6.95
RAV4			
Collision Repair Manual	1997–96	00400–BR045	20.00
Collision Repair Manual–5–Door	1997–96	00400–BR052	15.00
SUPRA			
Collision Repair Manual	1997–93	00400–BR042	9.00
Collision Repair Manual–Sport Roof	1992–86	00400–BRM00–5E	6.95
Collision Repair Manual	1992–86	00400–BRM00–9E	4.95
SUPRA, CELICA			
Collision Repair Manual	1986–82	00400–36182	6.95
TERCEL			
Collision Repair Manual	1997–95	00400–BR047	20.00
Collision Repair Manual	1994–92	00400–BR029	9.00
Collision Repair Manual–Sedan	1991–86	00400–BRM00–7U	6.95
Collision Repair Manual–Coupe	1991–87	00400–BRM01–1U	4.95
Collision Repair Manual	1986–85	00400–36431–E	6.95
Collision Repair Manual–4WD	1988–83	00400–36432–E	6.95
VAN			
Collision Repair Manual	1989–84	00400–BRM00–3E	6.95
4RUNNER			
Collision Repair Manual	1997–96	00400–BR060	20.00

ORDERING INFORMATION ON PAGE 5

COLLISION REPAIR SUPPORT MATERIALS

These manuals focus on the fundamental skills necessary to develop a qualified body or paint technician.

Each title is useful for:

- Quick reference guidelines
- Fundamental repair information
- Basic diagnostic and damage assessment

Name	Part Number	Price
FUNDAMENTAL BODY REPAIR PROCEDURES		
Fundamental Manual	00400–BRM00–2E	$14.95
FUNDAMENTAL PAINTING PROCEDURES		
Fundamental Manual	00400–BR024	19.00

COLLISION REPAIR TRAINING COURSE PACKAGES

Each of these course packages are used exclusively at all Toyota Collision Repair and Refinish Training Centers and are available as self–study training packages for technicians performing collision repair and refinish operations.

Each training package includes a technician reference guide, videotape and learning aid.

Topics covered include:

- Cutting and welding procedures
- Body panel replacement
- Preparation procedures for refinish
- Color evaluation

Name	Part Number	Price
Toyota Paint Finish Repair (PFR)	00400–10000	$54.95
Toyota Color Matching For Painters (CMFP)	00415–10002	54.95
Toyota Advanced Painting Techniques (APT)	00415–10004	54.95
Toyota Non–Structural Body Repair Techniques (NBRT)	00415–10001	54.95
Toyota Structural Body Repair Techniques (SBRT)	00415–10003	54.95

ORDERING INFORMATION ON PAGE 5

COLLISION REPAIR INFORMATION BULLETINS

Collision Repair Information Bulletins (CRIBS) provide Toyota body and paint technicians with the latest developments in collision repair and refinish. Information is divided among the following topics:

- General information
- Structural repair
- Welding
- Refinish
- Exterior
- Interior
- Electrical
- Alignment
- Tools and equipment

Name	Part Number	Price
Collision Repair Information Binder includes Bulletins #1–41	00408–03000–01	$20.00
CRIB Bulletin #49	00408–03000–49	1.00
CRIB Bulletins #51–57	00408–03000–51–57	10.00
CRIB Bulletins #58–61	00408–03000–58–61	5.00
CRIB Bulletins #62–65	00408–03000–62–65	5.00
CRIB Bulletins #66–67	00408–03000–66–67	5.00
CRIB Bulletins #68–69	00408–03000–68–69	1.18
CRIB Bulletin #70	00408–03000–70	2.00
CRIB Bulletin #71	00408–03000–71	2.24
CRIB Bulletin #72	00408–03000–72	1.62

BODY DIMENSIONS GUIDE

The Toyota Body Dimension Guide provides data necessary to assess the extent of collision damage by using vehicle–specific dimension charts and measurement specifications. The dimension guide provides specifications for the following areas:

- engine compartment
- door and compartment openings
- underbody
- suspension crossmember
- frame alignment
- cab alignment

1980–1997 Body Dimension Guide	00117–00540–97	$3.50

ORDERING INFORMATION ON PAGE 5

ORDER FORM

Please Fill Out Entire Form

Ordering Instructions

1. Fill in the Vehicle Information section.
2. Select the manual(s) containing the information you need. Enter the title, quantity, price, and total cost for each manual you order. Add total cost of the manuals you have ordered and enter in the Subtotal box. Enter applicable state sales tax in the Tax box.
3. Select a shipping method and enter the cost in the blank column. Add Subtotal, Tax, and shipping charge and enter in the Total box.
4. Select Form of Payment. Make check or money order payable to: Toyota Service Publications.
5. Complete the shipping label.

Mail your completed order form to:
TOYOTA SERVICE PUBLICATIONS
750 W. Victoria St., Compton, CA 90220-5538

CREDIT CARD TOLL-FREE TELEPHONE ORDERING
You may also order your manuals by phone. Please have your order form filled out and your credit card handy when calling our operators. Call between the hours of 7:00 a.m. and 4:30 p.m. PST at 1-800-622-2033.

1. VEHICLE INFORMATION: Helps confirm correct manual

Model: _____ Year: _____

Vehicle I.D. # [ ][ ][ ][ ][ ][ ][ ][ ][ ][ ][ ][ ][ ][ ][ ][ ][ ]
(See door opening on driver's side. Example: JT2MX63EB0123456)

Customer Name: _____

2. MANUAL TYPE	MODEL	YEAR	COST	QTY	TOTAL COST
Example: Repair	Camry (Vol. I)	1997	75.00	1	75.00
Repair	Camry (Vol. II)	1997	100.00	1	100.00

MOST MANUALS COVER ONE MODEL YEAR ONLY **Subtotal** _____

APPLICABLE STATE SALES TAX **MUST** BE INCLUDED **Tax*** _____

***SALES TAX REQUIRED EXCEPT FOR STATES LISTED BELOW:**
DELAWARE, NEW HAMPSHIRE, HAWAII, MONTANA, OREGON

3. SHIPPING METHOD**

(Choose One)	Delivery Time	Cost	
☐ Air 1***	2 days	20.00	
☐ Air 2***	3-4 days	12.00	
☐ Surface 1	2-3 weeks	6.00	

FOREIGN SHIPMENTS: SHIPPED AIR ONLY AND APPLICABLE DUTY CHARGES PAID BY CUSTOMER, AND A PHONE NUMBER IS NEEDED FOR SHIPMENT. NOTE: MANUALS ARE SHIPPED AIR ONLY TO ALASKA, PUERTO RICO, VIRGIN ISLANDS, AND HAWAII.

Total Order $ _____

** Shipping and handling costs reflect single manual orders only. For multiple manuals, please call for charges. Shipping and handling for a single Owner's Manual is $3.00.
*** Air 1 and Air 2: No deliveries to P.O. Boxes or APO.

4. FORM OF PAYMENT:

Please do not send cash

☐ Check ☐ Money Order Payable to Toyota Service Publications
☐ Visa ☐ MasterCard

Credit Card # [ ][ ][ ][ ][ ][ ][ ][ ][ ][ ][ ][ ][ ][ ][ ][ ]

Expiration Date [ ][ ] – [ ][ ]

Daytime Phone # (____) _____ – _____

Signature: _____
(Required if using a credit card)

When service information is similar for Toyotas built for the U.S. and for other countries, the illustrations may not always show a U.S. model. Also, when the mechanical design does not significantly change from one year to the next, the same manual may be applicable to several years. All information and specifications in any manual are based on the latest data available at the time of publication. However, in the interest of Toyota's policy of continual product improvement, they are subject to change. Prices of manuals are also subject to change without notice.

5. SHIPPING LABEL:

COMPANY NAME: (IF APPLICABLE)

YOUR NAME:

ADDRESS:

CITY: STATE: ZIP:

P/N 00400-1997C
97-DEV-146

UNDER BODY

(Three-Dimensional Distance)

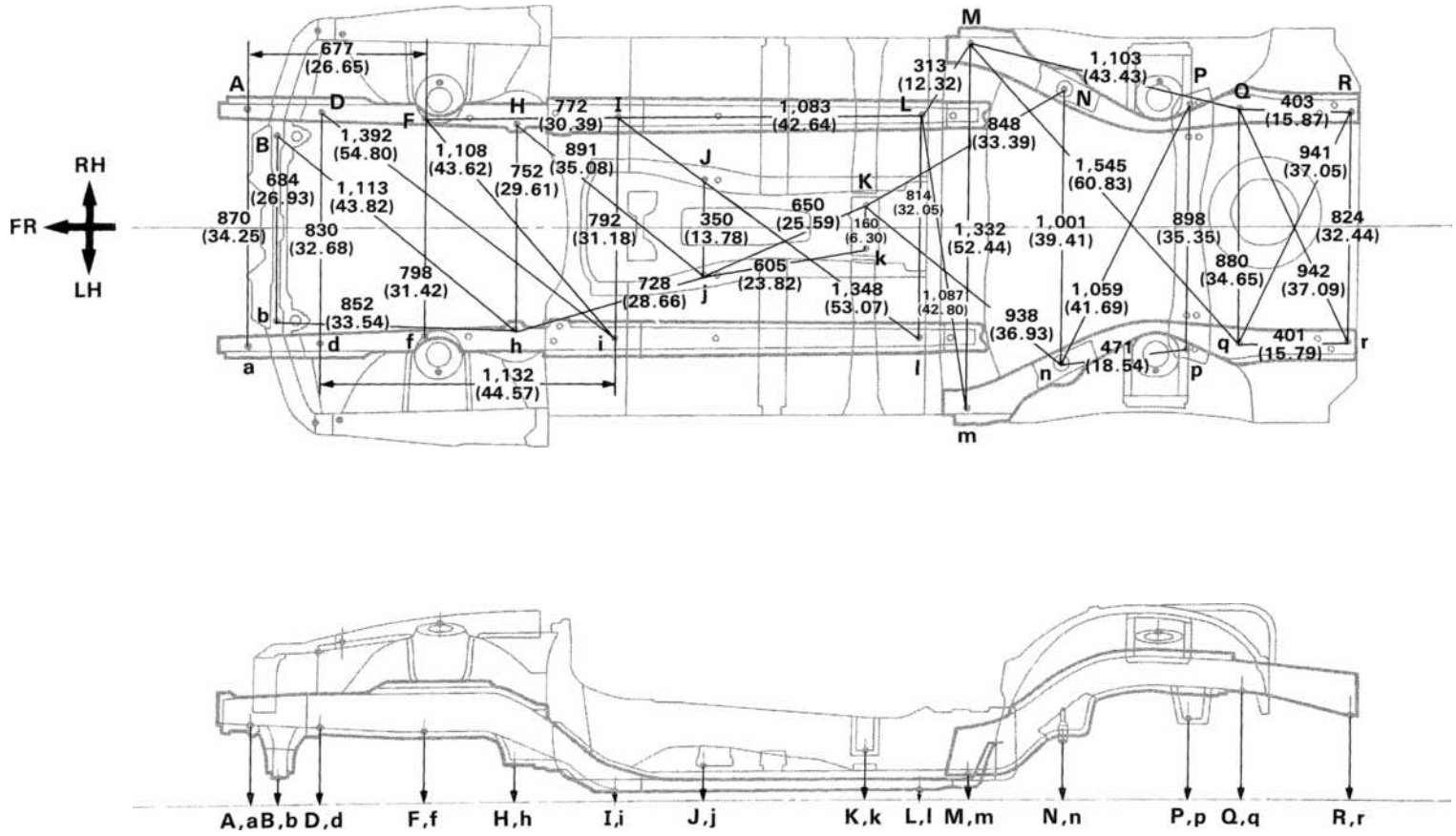

mm (in.)

Symbol	Name	Hole dia.	Symbol	Name	Hole dia.
A, a	Font side member standard hole	7 (0.28)	L, l	Front floor reinforcement standard hole	10 (0.39)
B, b	Font crossmember working hole	9 (0.35)	M, m	Rear floor side member standard hole	18 (0.71)
D, d	Font side member standard hole	18 (0.71)	N, n	Rear suspension member installation nut	14 (0.55)nut
F, f	Font suspension crossmember installation hole	13 (0.51)	P, p	Suspension member bracket installation nut-front, outer	10 (0.39)nut
H, h	Front suspension crossmember installation nut	14 (0.55) nut	Q, q	Rear floor side member rear standard hole	18 (0.71)
I, i	Front side member standard hole	18 (0.71)	R	Tank band installation nut	10 (0.39)nut
J, j	Engine rear mounting member installation nut-front	10 (0.39) nut	r	Transport hook installation nut	12 (0. 47)nut
K, k	Propeller shaft center support bearing installation nut	10(0.39) nut	—	—	—

NOO8908

UNDER BODY (Cont'd)

(Two-Dimensional Distance)

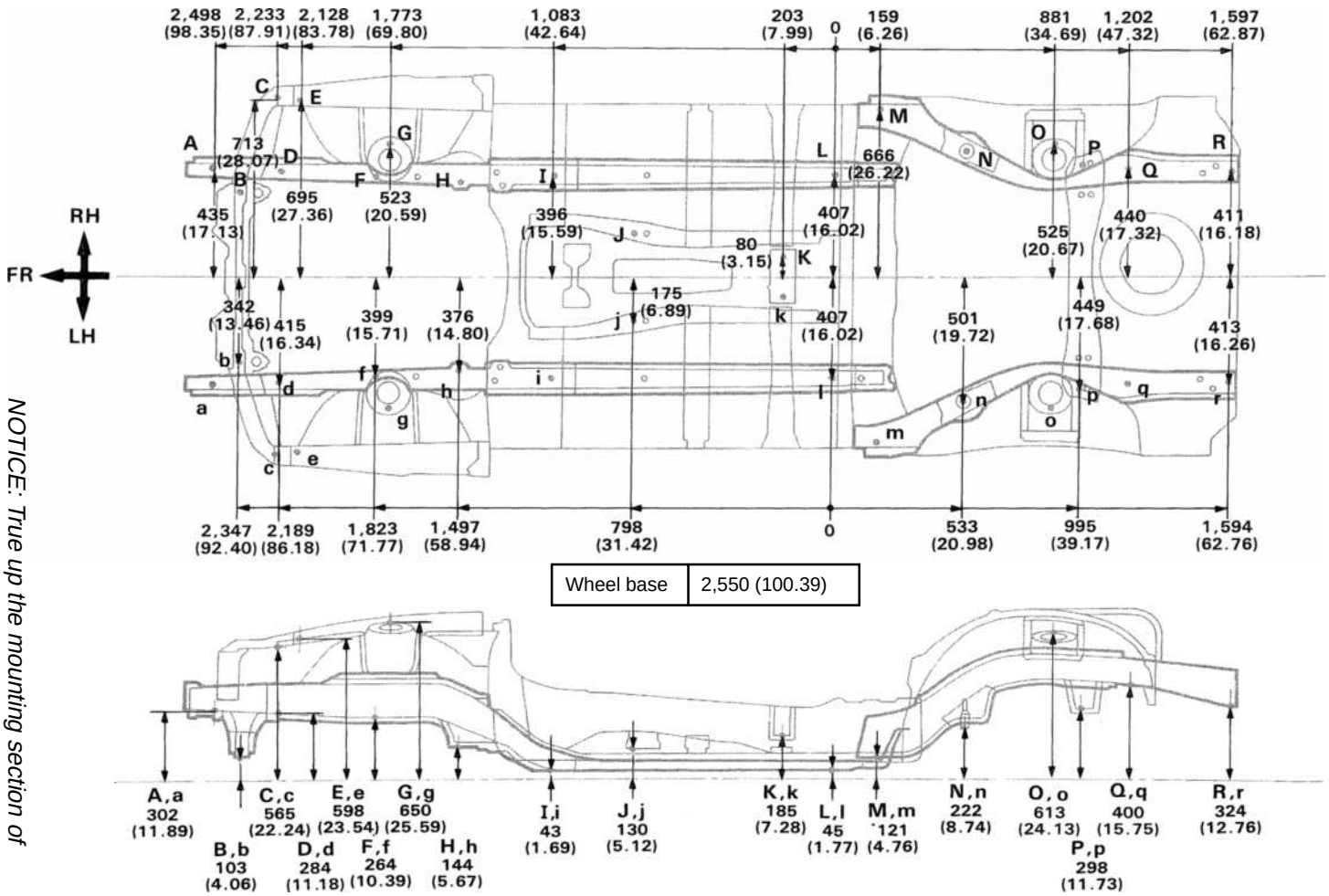

Wheel base	2,550 (100.39)

NOTICE: True up the mounting section of the front airbag sensor very carefully and accurately so that the sensor can be mounted at the correct angle.

mm (in.)

Symbol	Name	Hole dia.	Symbol	Name	Hole dia.
A, a	Front side member standard hole	7 (0.28)	K, k	Propeller shaft center support bearing installation nut	10 (0.39)nut
B, b	Front crossmember working hole	9 (0.35)	L, l	Front floor reinforcement standard bole	10 (0.39)
C, c	Front airbag sensor installation hole	9 (0.35)	M, m	Rear floor side member standard hole	18 (0.71)
D, d	Front side member standard bole	18 (0.71)	N, n	Rear suspension member installation nut	14 (0.55)nut
E, e	Front airbag sensor installation nut	8 (0.31) nut	O, o	Rear spring support hole-outer	9 (0.35)
F, f	Front suspension crossmember installation hole	13 (0.51)	P, p	Suspension member bracket installation nut-front, outer	10 (0.39)nut
G, g	Front spring support hole-outer	13 (0.51)	Q, q	Rear floor side member rear standard hole	18 (0.71)
H, h	Front suspension crossmember installation nut	14 (0.55) nut	R	Tank band installation nut	10 (0.39)nut
I, i	Front side member standard hole	18 (0.71)	r	Transport hook installation nut	12 (0.47)nut
J, j	Engine rear mounting member installation nut-front	10 (0.39) nut	—	—	—

COLLISION REPAIR INFORMATION

FOR THE TOYOTA DEALER

TITLE:	URETHANE ADHESIVE SEALANT FOR FIXED GLASS INSTALLATION	PAGE 1 of 3

SECTION: STRUCTURAL REPAIR BULLETIN #31

MODELS: ALL

DATE: NOVEMBER 1988

In order to comply with FMVSS 212 – Windshield Retention and FMVSS 216 – Roof Crush Resistance, the factory uses a urethane adhesive sealant with bonded strength of not less than 40 kilograms per square centimeter or 569 pounds per square inch for certain bonded windshields and rear windows on Toyota vehicles.

A Urethane adhesive sealant of at least equivalent strength must be used to maintain these retention and roof crush standards when windshield glass replacements are performed by either the dealer or an outside glass shop.

Since the adhesive kits listed in Toyota Repair Manuals are not available in the U.S.A., a listing of some locally available equivalent materials is provided below. Be sure to follow the sealant manufacturer's instructions for best results.

- CVS Urethane Auto Glass Sealer by American Sure Seal
  Bonding strength = 600 pounds per square in. (approximate)
- Super Fast Urethane by 3M
  Bonding strength = 1000 pounds per square in. (approximate)
- Unrest 212 by Kent Industries
  Bonding strength = 600 pounds per square in. (approximate)
- Urethane E Auto Glass Sealer by Protective Treatment Inc.
  Bonding strength = 600 pounds per square in. (approximate)

For more detailed application information, see the attached "Urethane Adhesive Sealant Application for Toyota Models".

Rear quarter windows on some models are bonded, however, the adhesive for these windows requires less bonding strength and therefore, use of Butyl sealer may be sufficient for these windows.

This bulletin is for information and clarification purposes only. Existing Warranty policy and Flat Rate information have not been changed. Toyota is not responsible for problems that occur from usage of improper sealants or procedures which fail to meet Toyota specifications. PLEASE CONSULT THE APPROPRIATE TOYOTA SERVICE MANUAL FOR THE PROPER REPAIR PROCEDURES.

NOTE: PLEASE ROUTE THIS BULLETIN TO YOUR COLLISION REPAIR CENTER MANAGER

URETHANE ADHESIVE SEALANT APPLICATION FOR TOYOTA MODELS

MODEL	BODY	WINDSHIELD	REAR WINDOW	QUARTER WINDOW
TERCEL				
AL/EL 8608 to date EL	2–Dr Sdn 4–Dr Sdn 5–Dr Sdn	Urethane Bonded	Conventional Weatherstrip	Butyl Bonded
8308 to 8802 AL	5–Dr Wgn	Urethane Bonded	Conventional Weatherstrip	Conventional Weatherstrip
8208 to 8607 AL	3–Dr L/B	Urethane Bonded	Conventional Weatherstrip	Conventional Weatherstrip
COROLLA				
FWD AE 8708 to date	2–Dr S/C 4–Dr Sdn	Urethane Bonded	Urethane Bonded	Butyl Bonded
	All–Trac Wgn	Urethane Bonded	Urethane Bonded	Butyl Bonded
	4–Dr Wgn	Urethane Bonded	Conventional Weatherstrip	Butyl Bonded
FWD AE 8409 to 8707	4–Dr Sdn	Urethane Bonded	Conventional Weatherstrip	Conventional Weatherstrip
	5–Dr L/B	Urethane Bonded	Conventional Weatherstrip	Butyl Bonded
FX Models 8608 to 8807	3–Dr L/B	Urethane Bonded	Conventional Weatherstrip	Conventional Weatherstrip
RWD AE 8409 to 8707	2–Dr S/C 2–Dr L/B	Urethane Bonded	Conventional Weatherstrip	Butyl Bonded
MR2				
AW 8501 to date	2–Seater	Urethane Bonded	Conventional Weatherstrip	Butyl Bonded
CELICA				
ST 8509 to date	2–Dr S/C 2–Dr L/B	Urethane Bonded	Urethane Bonded	Butyl Bonded
SUPRA				
MA70 8601 to date	2–Dr L/B	Urethane Bonded	Urethane Bonded	Butyl Bonded

URETHANE ADHESIVE SEALANT APPLICATION FOR TOYOTA MODELS (cont'd)

MODEL	BODY	WINDSHIELD	REAR WINDOW	QUARTER WINDOW
CAMRY				
SV/VV 8609 to date	4–Dr Sdn	Urethane Bonded	Urethane Bonded	Butyl Bonded
	5–Dr Wgn	Urethane Bonded	Urethane Bonded	Butyl Bonded
SV/CV 8409 to 8608	4–Dr Sdn 5–Dr L/B	Urethane Bonded	Conventional Weatherstrip	Butyl Bonded
CRESSIDA				
MX 8808 to date	4–Dr Sdn	Urethane Bonded	Conventional Weatherstrip	Urethane Bonded
8404 to 8807	4–Dr Sdn	Urethane Bonded	Urethane Bonded	Butyl Bonded
	5–Dr Wgn	Urethane Bonded	Conventional Weatherstrip	Butyl Bonded
VAN				
YR 8309 to date	Passenger/ Cargo	Urethane Bonded	Conventional Weatherstrip	Conventional Weatherstrip
LAND CRUISER				
FJ	4–Dr Wgn	Conventional Weatherstrip	Conventional Weatherstrip	Conventional Weatherstrip
TRUCK				
RN/LN 8808 to date	4 x 2 4 x 4	Refer to Service Manual	Conventional Weatherstrip	Conventional Weatherstrip
TRUCK				
RN/LN 8309 to 8807	4 x 2 4 x 4	Refer to Service Manual	Conventional Weatherstrip	Conventional Weatherstrip
4RUNNER				
8408 to date	All	Urethane Bonded	Conventional Weatherstrip	Butyl Bonded

The following urethane adhesive kits described in Toyota Repair Manuals are <u>not</u> available in the U.S.A.

<u>Adhesive Kits in Toyota Repair Manuals</u>

P/N 08850–00070 32 to 59 degrees F (0 to 15 degrees C)

08850–00080 59 to 95 degrees F (15 to 35 degrees C)

08850–00090 95 to 113 degrees F (35 to 45 degrees C)

COLLISION REPAIR INFORMATION

FOR THE TOYOTA DEALER

TITLE: PAINT VENDOR TECHNICAL SERVICE SUPPORT

SECTION: GENERAL INFORMATION BULLETIN #77

MODELS: ALL

DATE: MARCH 1997

For your reference, we are providing the following technical service telephone numbers and support features offered by your respective paint supplier. Please contact the suppliers directly to receive important technical and refinish product information.

BASF
800–825–3000
8:00 AM to 8:00 PM EST
- technical information
- product information
- color information

DUPONT
800–222–5225
8:00 AM to 4:30 PM EST
- technical service
- paint system selection
- training information

ICI AUTOCOLOR
800–647–6050
8:00 AM to 5:30 PM EST
- technical product/process information
- color information

PPG
- technical service (216) 572–6111
  8:00 AM to 6:00 PM EST
- color library (216) 572–6100
  8:00 AM to 6:00 PM EST
- training info./schedules
  (800) 450–2654 24–hour service

SHERWIN–WILLIAMS
800–798–5872 **(For Martin Senour 800–526–6704)**
8:30 AM to 5:00 PM EST
- technical applications assistance
- color match assistance
- technical training, locations/dates

SIKKENS
800–521–9222
8:00 AM to 6:00 PM EST
- technical support
- color information

SPIES–HECKER
800–447–7437
8:00 AM to 6:00 PM EST
- technical information
- color information

STANDOX
800–551–9296
8:00 AM to 7:00 PM EST
- product technical issues – x3108
- color issues –x3109 or 3110
- training issues – x3139 or 3118

Information and specific technical procedures for the repair and refinish of Toyota vehicles may be obtained by attending a Toyota Collision Repair and Refinish Training course.

Toyota courses are designed to enhance the skills of collision repair technicians and provide detailed information in order to simplify and improve the quality of each repair. Courses are taught at each Toyota Collision Repair and Refinish Training Center.

For additional information about Toyota Collision Repair and Refinish Training courses and a course schedule, please contact your local Toyota regional office.

COLLISION REPAIR INFORMATION

FOR THE TOYOTA DEALER

TITLE:	WELDING HIGH STRENGTH STEEL (H.S.S.)	PAGE 1 of 5

SECTION: WELDING BULLETIN #27

MODELS: ALL TOYOTA MODELS

DATE: JULY 1988

In today's body shop environment high strength steel (H.S.S.) body parts are frequently welded during collision damage repairs. Typical uses for H.S.S. are the front cross member, front body outer pillar, floor side member and door side impact protection beam. Because H.S.S. is used in these areas of potential high stress, repairs must be done properly to maintain the structural integrity of the vehicle.

Two types of H.S.S. are used. Solution hardened H.S.S. is used for door panels, hood outer panel, etc., while precipitation hardened H.S.S. is used for door impact beams and bumper reinforcements. It is not necessary to distinguish solid solution hardened steel from ordinary steels for repair purposes.

The location of H.S.S. parts can be found in the Toyota Repair Manual for Collision Damage under the Body Panel Construction section. A sample chart from the 1987 Camry Collision Repair Manual is on page 3 of this bulletin. A list of available Toyota Collision Repair manuals is on page 4.

REPAIR GUIDELINES

H.S.S. and ordinary steel parts in Toyota vehicles are welded using the same methods. The following precautions apply:

- Use either spot welding or MIG/MAG (shield gas) welding. MIG/MAG (shield gas) welding should only be done by an experienced body shop person.
- Only braze body components previously brazed at the factory and as indicated in the Toyota Repair Manual for Collision Damage.
- Do not use an oxy–acetylene torch for fusion welding auto bodies. The large heat affected zone may destroy galvanized coatings and cause excessive panel distortions. In addition, an oxy–acetylene torch will reduce the strength and increase the brittleness of H.S.S.

REFERENCE MATERIALS

The following manuals should be readily available in the body shop:

- Toyota Fundamental Body Repair Procedures Manual
- Complete set of Toyota Repair Manuals for Collision Damage

TOOLS

Proper tools are mandatory for H.S.S. repair. Tools include:

- MIG/MAG welder
- Spot welder
- H.S.S. spot weld cutter that will cut 8mm and 10mm holes
- Air saw
- Plasma cutter
- Air power chisel with panel cutter
- Hole punch
- Head protector
- Dust mask
- Face protector
- Vise grip pliers
- Weld through primer (see page 5 of this bulletin)
- Ear plugs
- Car cover for glass and interior

WELDS

Four types of welding are required in the repair of Toyota vehicles:

- Spot
- Plug
- Continuous
- Braze

Technicians doing repair work must be proficient in doing all four types of welding since all four are used in various locations throughout the vehicle. The Toyota Repair Manuals for Collision Damage show the location and type of welds that must be used. The correct number and type of welds must be used to ensure structural integrity.

PROCEDURE

The complete in–depth procedure for welding H.S.S. and ordinary steel can be found in the Toyota Fundamental Body Repair Procedures manual for the applicable vehicle. The basic procedure requires:

1. Removal of auxiliary parts
2. Removal of damaged parts
3. Prepare new parts
4. Position new parts
5. Welding
6. Finishing of welded areas.

BODY PANEL CONSTRUCTION — High Strength Steel (H.S.S.) Parts

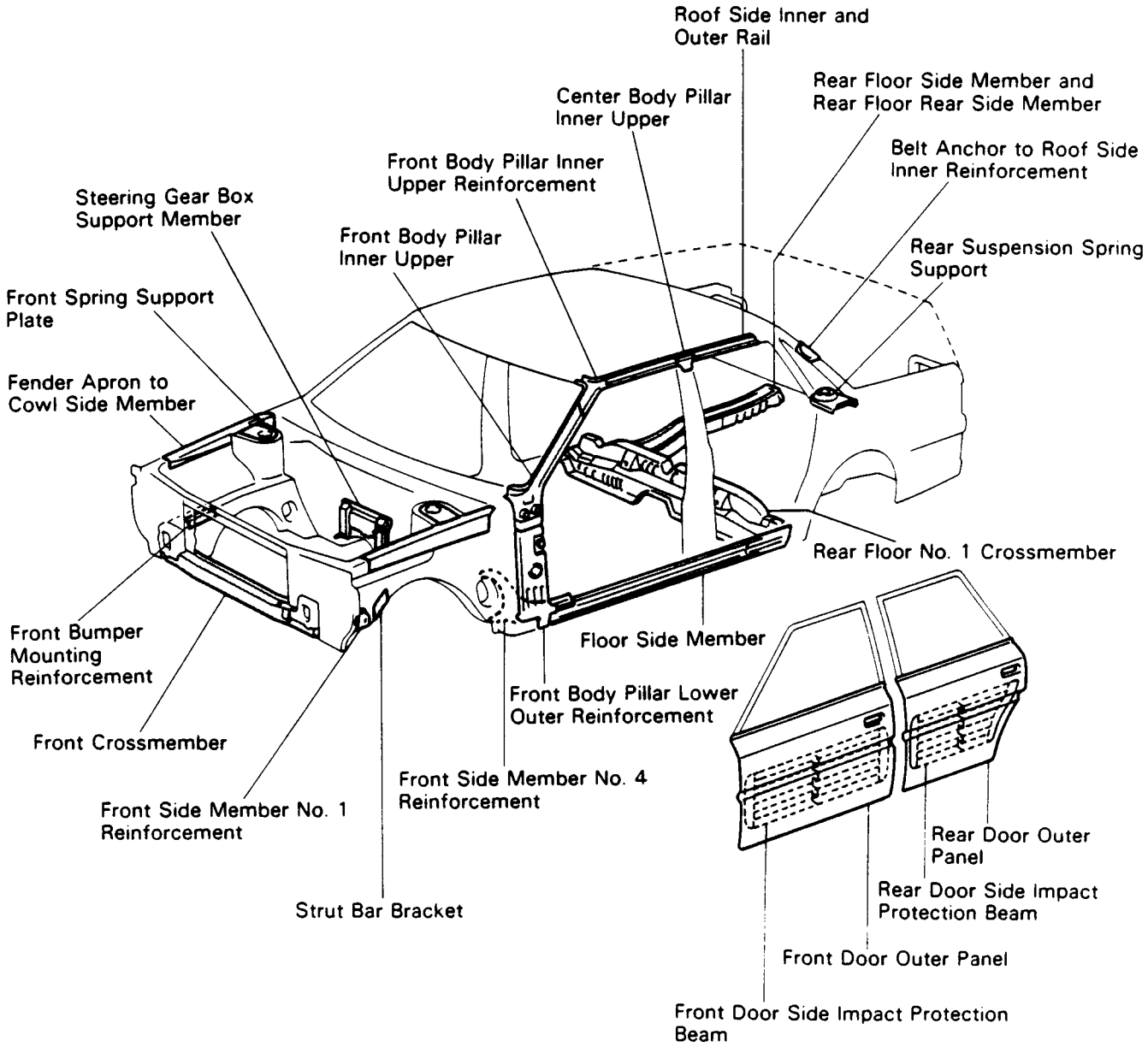

TOYOTA SERVICE PUBLICATIONS

PART NUMBER	DESCRIPTION
3643–8E	Fundamental Painting Procedures
BRM00–2E	Fundamental Collision Repair
3643–1E	Tercel 2WD
3643–2E	Tercel 4WD
3643–4E	Corolla 83–87
36182	Celica/Supra 82–86
BRM00–1E	Celica 86–88
BRM00–5E	Supra 86–88
3643–3E	Camry 83–86
36118	Cressida 81–84
3644–1E	Cressida 85–88
3644–2E	Cressida Wgn. 85–88
3644–oA	MR2 85–88
BRM00–3E	Van 84–87
BRM01–1U	Tercel Coupe 87–88
BRM01–0U	Camry 87
BRM00–7U	Tercel Sedan 87–88
BR012	Corolla 88
BRM00–6E	FX/FX 16 87–88
BRM00–9E	Supra Sport Roof 86–88
BRM00–8E	MR2 T–Roof 85–88

You may order these on your TDN through the non–parts ordering system.

WELD–THROUGH PRIMER SUPPLIERS *

1. HTP "Cold Galvanizing Compound"
   Part No. 12022
   HTP America, Inc.
   261 Woodwork Lane
   Palatine, IL 60067

2. TTE "Dan–Prime"
   Transnational Technology Enterprises, Inc.
   3541 Old Conejo Road, #107
   Newbury Park, CA 91320

3. Anchor Brand "Spray–Galv"
   NASCO
   Welding Equipment and Safety Supplies
   Chicago, IL

4. 3M "Weld–Thru Coating"
   Part No. 051131–05913
   3M Automotive Trades Division
   St. Paul, MN

5. Kent "Spotweld Primer"
   Part No. 50190
   Kent Industries
   4500 Euclid Ave.
   Cleveland, OH 44103

***** There may be other sources for this material that are not listed here.

COLLISION REPAIR INFORMATION

FOR THE TOYOTA DEALER

TITLE: 1997 PAINT AND REFINISH FORMULA CODES

SECTION: REFINISH BULLETIN #74

MODELS: ALL

DATE: JANUARY 1997

Attached for your reference is a list of all 1997 Toyota paint codes and the refinish paint codes for the following refinish paint manufacturers:

BASF, DuPont, PPG, Sherwin–Williams, Sikkens, Spies–Hecker, and ICI Autocolor.

NOTE: The vehicle paint code is on the certification label which can be located on the driver's side door jamb or the lower section of the "B" pillar.

NOTE: Please contact your local paint representative for the actual paint mixing formulas or if you need help in color matching.

1997 TOYOTA PAINT CODES AND COLOR NAMES

COLOR CODE	COLOR NAME	BASF	DUPONT	PPG	SHERWIN–WILLIAMS	SIKKENS	SPIES–HECKER	ICI AUTO COLOR
040	Super White	Toy040	W8430	90288	35000	Toy040	16170	KK47
041	White	Toy041	L8416	90274	34792	Toy041	17618	KJ64
045	Super White	Toy045	H8931	90547	38712	Toy045	16004	NP65
051	Diamond White Pearl	Toy051	L9246 L9247	90822 90826	42872 42873	Toy051	98125 16329	PF76B TD86G
056	Natural White	Toy056	F1858	91452	52893	Toy056	15217	BAB5
1A0	Platinum Metallic	Toy1A0	N9923	4896	49700	Toy1A0	70809	6ED5B
1A1	Anthracite Metallic	Toy1A1	L9991	4897	48977	Toy1A1	80164	5TX2B
1A2	Topaz Metallic	Toy1A2	F0016	4898	49701	Toy1A2	70855	6ED9B
1A5	Desert Dune Pearl	Toy1A5	F1458	36090	52139	Toy1A5	72759	8NH3B
1A6	Moonglow Pearl	Toy1A6	F1459	36091	52140	Toy1A6	72760	8NH4B
1B1	Champagne Pearl	Toy1B1	F2186	5252	53074	Toy1B1	20699	FLT9B
1B2	Antique Sage Pearl	Toy1B2	F2201	5324	54757	Toy1B2	73622	HRE5B

1997 TOYOTA PAINT CODES AND COLOR NAMES (cont'd)

COLOR CODE	COLOR NAME	BASF	DUPONT	PPG	SHERWIN–WILLIAMS	SIKKENS	SPIES–HECKER	ICI AUTO COLOR
183	Blue Slate Metallic	Toy183	K9318	35139	44338	Toy183	98625	2698B
191	Graystone Pearl	Toy191	F1051	5046	51142	Toy191	91326	2N7JB
193	Opal Beige Pearl	Toy193	L9881	4899	49669	Toy193	70430	4YV6B
196	Pewter Pearl	Toy196	H9878	4742	47605	Toy196	70401	4SS6B
199	Alpine Silver Metallic	Toy199	L9990	4900	48976	Toy199	70706	5TX1B
202	Black	Toy202	F0220	9300	1738SW 8803MS	Toy202	73935	TH21B
204	Black Metal-lic	Toy204	H8645	9624	35533	Toy204	96020	A237B
205	Satin Black Metallic	Toy205	L9024	9756	40888	Toy205	97765	B941B
3E5	Super Red	Toy3E5	W8431	72717	35001	Toy3E5	38916	KK41
3E6	Bright Red	Toy3E6	W8432	72718	35002	Toy3E6	38240	KK42
3H4	Medium Red Pearl	Toy3H4	N8833	73074	38386	Toy3H4	97117	PA49B
3H7	Cardinal Red	Toy3H7	L9026	73279	40890	Toy3H7	38805	WJ91
3J7	Garnet Red Pearl	Toy3J7	L9346	4402 4403	44407 44408	Toy3J7	98626 38992	PH375B
3J8	Prussian Red Pearl	Toy3J8	W9463	4596	46590	Toy3J8	99827	PT73B
3K4	Sunfire Red Pearl	Toy3K4	W9546	4511	46144	Toy3K4	99722	PM54B
3L2	Renaissance Red	Toy3L2	L9992	4902	48978	Toy3L2	30491	5TX3B
3L3	Ruby Red Pearl	Toy3L3	F0294	5042	51162	Toy3L3	30914	6KD3B
3L5	Radiant Red	Toy3L5	F2688	5287	54291	Toy3L5	33476	JNK8
3L9	Coral Rose Pearl	Toy3L9	F2727	5335	54763	Toy3L9	33609	HRF2B
4K9	Sandstone Beige Metallic	Toy4K9	N9216	26846	43482	Toy4K9	98224	2575B
4M4	Sierra Beige Metallic	Toy4M4	H9879	4743	47606	Toy4M4	20157	4SS7B
4M9	Cashmere Beige Metallic	Toy4M9	N9924	4903	49702	Toy4M9	20261	6ED6B
4N5	Vintage Rose Metallic	Toy4N5	F2716	5339	54862	Toy4N5	61953	HYV5B

1997 TOYOTA PAINT CODES AND COLOR NAMES (cont'd)

COLOR CODE	COLOR NAME	BASF	DUPONT	PPG	SHERWIN–WILLIAMS	SIKKENS	SPIES–HECKER	ICI AUTO COLOR
6M1	Dark Emerald Green Pearl	Toy6M1	W9542	4595	46589	Toy6M1	99746	PM72B
6M3	Silver Spruce Metallic	Toy6M3	W9514	4474	45931	Toy6M3	99679	D381B
6N5	Sequoia Green Metallic	Toy6N5	F0698	5195	53003	Toy6N5	61270	7DK1B
6N7	Sierra Green Metallic	Toy6N7	F1036	5047	51163	Toy6N7	61391	7PP1B
6P2	Classic Green Pearl	Toy6P2	F1850	5173	52889	Toy6P2	61953	BAA7B
6P3	Deep Jewel Green Pearl	Toy6P3	F1805	5166	52887	Toy6P3	61928	ARD3B
6P5	Bright Ivy Pearl	Toy6P5	F2266	5326	54764	Toy6P5	64196	HDJ7B
6P6	Meadow Green Pearl	Toy6P6	F2718	N/A	54483	Toy6P6	64101	HDJ3B
6P9	Glacier Green Metallic	Toy6P9	F2721	5333	54760	Toy6P9	64198	HRE8B
748	Ocean Mist Metallic	Toy748	L9679	4636	53004	Toy748	91343	PT69B
751	Evergreen Pearl	Toy751	H9881	4746	47857	Toy751	60290	4SS9B
754	Paradise Blue Metallic	Toy754	F0893	5043	51166	Toy754	53753	8VR3B
756	Light Turquoise Pearl	Toy756	F1856	5171	52891	Toy756	61954	BAB1B
8K0	Night Shadow Pearl	Toy8K0	N9925	4910	49707	Toy8K0	50887	6ED7B
8K1	Orchid Blue Pearl	Toy8K1	F0605	5044	51167	Toy8K1	53510	7DJ8B
8K4	Confetti Blue Metallic	Toy8K4	F0699	5196	53005	Toy8K4	53552	7DK2B
8K6	Cobalt Blue Metallic	Toy8K6	F0892	5045	51168	Toy8K6	53754	8VR2B
8K8	Brilliant Blue Pearl	Toy8K8	F1800	5161	52884	Toy8K8	54221	ARC7B
8K9	Bright Iris Pearl	Toy8K9	F1038	5051	51169	Toy8K9	53728	7PP9B

1997 TOYOTA PAINT CODES AND COLOR NAMES (cont'd)

COLOR CODE	COLOR NAME	BASF	DUPONT	PPG	SHERWIN–WILLIAMS	SIKKENS	SPIES–HECKER	ICI AUTO COLOR
8L3	Blue Velvet Pearl	Toy8L3	F2239	5328	54032	Toy8L3	54676	FRC7B
8L5	Royal Sapphire Pearl	Toy8L5	F2728	5329	54485	Toy8L5	55068	HDJ4B
8L6	Azure Blue Pearl	Toy8L6	F2058	5205	53071	Toy8L6	54561	ETB8B
8L7	Stellar Blue Pearl	Toy8L7	F2059	5206	53072	Toy8L7	54562	ETB9B
925	Purple Storm Metallic	Toy925	L9681	5197	53006	Toy925	91614	PT74B
926	Lavender Steel Metallic	Toy926	F2060	5207	53073	Toy926	40582	ETC1B
927	Shadow Plum Pearl	Toy927	F0899	5053	51170	Toy927	80374	7PR2B
930	Blue Dusk Pearl	Toy930	F2723	5330	54758	Toy930	40713	HRE6B
931	Frosted Iris Metallic	Toy931	F2724	5331	54759	Toy931	40714	HRE7B
932	Misty Plum Metallic	Toy932	F2267	5284	53981	Toy932	40663	GNL8B
933	Fiesta Blue Metallic	Toy933	F2695	5291	54297	Toy933	40664	GNM3B
936	Deep Violet Pearl	Toy936	F2726	5334	54761	Toy936	40715	HRE9B

TWO TONE COMBINATIONS

2AB	1A5 Desert Dune Pearl 1A6 Moonglow Pearl	Toy1A5 Toy1A6	F1458 F1459	36090 36091	52139 52140	Toy1A5 Toy1A6	72759 72760	8NH3B 8NH4B
2AC	6M1 Dark Emerald Pearl 1A6 Moonglow Pearl	Toy6M1 Toy1A6	W9542 F1459	4595 36091	46589 52140	Toy6M1 Toy1A6	99746 72760	PM72B 8NH4B
2BV	6N7 Sierra Green Metallic 6P0 Gray/Green Metallic	Toy6N7 Toy6P0	F1036 F1799	5047 5325	51163 52883	Toy6N7 Toy6P0	61361 61753	7PP7B ARC5B
28X	196 Pewter Pearl 202 Black	Toy196 Toy202	H9878 F0220	4742 9300	47605 1738SW 8803MS	Toy196 Toy202	70401 79335	4226B TH21B

NOTE: Standox uses the Toyota color code to identify the color.
Example: Toyota color code 056 = Standox 056

For additional information about color matching Toyota vehicles, refer to the repainting section of the Toyota Fundamental Painting procedure manual (part # 00400–BR024) or contact your regional office to obtain information about Toyota Collision Repair and Refinish Training Programs.

COLLISION REPAIR INFORMATION

FOR THE TOYOTA DEALER

TITLE: 1997 PAINT AND REFINISH FORMULA CODES

SECTION: REFINISH BULLETIN #74

MODELS: ALL

DATE: JANUARY 1997

Attached for your reference is a list of all 1997 Toyota paint codes and the refinish paint codes for the following refinish paint manufacturers:

BASF, DuPont, PPG, Sherwin–Williams, Sikkens, Spies–Hecker, and ICI Autocolor.

NOTE: The vehicle paint code is on the certification label which can be located on the driver's side door jamb or the lower section of the "B" pillar.

NOTE: Please contact your local paint representative for the actual paint mixing formulas or if you need help in color matching.

1997 TOYOTA PAINT CODES AND COLOR NAMES

COLOR CODE	COLOR NAME	BASF	DUPONT	PPG	SHERWIN–WILLIAMS	SIKKENS	SPIES–HECKER	ICI AUTO COLOR
040	Super White	Toy040	W8430	90288	35000	Toy040	16170	KK47
041	White	Toy041	L8416	90274	34792	Toy041	17618	KJ64
045	Super White	Toy045	H8931	90547	38712	Toy045	16004	NP65
051	Diamond White Pearl	Toy051	L9246 L9247	90822 90826	42872 42873	Toy051	98125 16329	PF76B TD86G
056	Natural White	Toy056	F1858	91452	52893	Toy056	15217	BAB5
1A0	Platinum Metallic	Toy1A0	N9923	4896	49700	Toy1A0	70809	6ED5B
1A1	Anthracite Metallic	Toy1A1	L9991	4897	48977	Toy1A1	80164	5TX2B
1A2	Topaz Metallic	Toy1A2	F0016	4898	49701	Toy1A2	70855	6ED9B
1A5	Desert Dune Pearl	Toy1A5	F1458	36090	52139	Toy1A5	72759	8NH3B
1A6	Moonglow Pearl	Toy1A6	F1459	36091	52140	Toy1A6	72760	8NH4B
1B1	Champagne Pearl	Toy1B1	F2186	5252	53074	Toy1B1	20699	FLT9B
1B2	Antique Sage Pearl	Toy1B2	F2201	5324	54757	Toy1B2	73622	HRE5B

1997 TOYOTA PAINT CODES AND COLOR NAMES (cont'd)

COLOR CODE	COLOR NAME	BASF	DUPONT	PPG	SHERWIN–WILLIAMS	SIKKENS	SPIES–HECKER	ICI AUTO COLOR
183	Blue Slate Metallic	Toy183	K9318	35139	44338	Toy183	98625	2698B
191	Graystone Pearl	Toy191	F1051	5046	51142	Toy191	91326	2N7JB
193	Opal Beige Pearl	Toy193	L9881	4899	49669	Toy193	70430	4YV6B
196	Pewter Pearl	Toy196	H9878	4742	47605	Toy196	70401	4SS6B
199	Alpine Silver Metallic	Toy199	L9990	4900	48976	Toy199	70706	5TX1B
202	Black	Toy202	F0220	9300	1738SW 8803MS	Toy202	73935	TH21B
204	Black Metal-lic	Toy204	H8645	9624	35533	Toy204	96020	A237B
205	Satin Black Metallic	Toy205	L9024	9756	40888	Toy205	97765	B941B
3E5	Super Red	Toy3E5	W8431	72717	35001	Toy3E5	38916	KK41
3E6	Bright Red	Toy3E6	W8432	72718	35002	Toy3E6	38240	KK42
3H4	Medium Red Pearl	Toy3H4	N8833	73074	38386	Toy3H4	97117	PA49B
3H7	Cardinal Red	Toy3H7	L9026	73279	40890	Toy3H7	38805	WJ91
3J7	Garnet Red Pearl	Toy3J7	L9346	4402 4403	44407 44408	Toy3J7	98626 38992	PH375B
3J8	Prussian Red Pearl	Toy3J8	W9463	4596	46590	Toy3J8	99827	PT73B
3K4	Sunfire Red Pearl	Toy3K4	W9546	4511	46144	Toy3K4	99722	PM54B
3L2	Renaissance Red	Toy3L2	L9992	4902	48978	Toy3L2	30491	5TX3B
3L3	Ruby Red Pearl	Toy3L3	F0294	5042	51162	Toy3L3	30914	6KD3B
3L5	Radiant Red	Toy3L5	F2688	5287	54291	Toy3L5	33476	JNK8
3L9	Coral Rose Pearl	Toy3L9	F2727	5335	54763	Toy3L9	33609	HRF2B
4K9	Sandstone Beige Metallic	Toy4K9	N9216	26846	43482	Toy4K9	98224	2575B
4M4	Sierra Beige Metallic	Toy4M4	H9879	4743	47606	Toy4M4	20157	4SS7B
4M9	Cashmere Beige Metallic	Toy4M9	N9924	4903	49702	Toy4M9	20261	6ED6B
4N5	Vintage Rose Metallic	Toy4N5	F2716	5339	54862	Toy4N5	61953	HYV5B

1997 TOYOTA PAINT CODES AND COLOR NAMES (cont'd)

COLOR CODE	COLOR NAME	BASF	DUPONT	PPG	SHERWIN–WILLIAMS	SIKKENS	SPIES–HECKER	ICI AUTO COLOR
6M1	Dark Emerald Green Pearl	Toy6M1	W9542	4595	46589	Toy6M1	99746	PM72B
6M3	Silver Spruce Metallic	Toy6M3	W9514	4474	45931	Toy6M3	99679	D381B
6N5	Sequoia Green Metallic	Toy6N5	F0698	5195	53003	Toy6N5	61270	7DK1B
6N7	Sierra Green Metallic	Toy6N7	F1036	5047	51163	Toy6N7	61391	7PP1B
6P2	Classic Green Pearl	Toy6P2	F1850	5173	52889	Toy6P2	61953	BAA7B
6P3	Deep Jewel Green Pearl	Toy6P3	F1805	5166	52887	Toy6P3	61928	ARD3B
6P5	Bright Ivy Pearl	Toy6P5	F2266	5326	54764	Toy6P5	64196	HDJ7B
6P6	Meadow Green Pearl	Toy6P6	F2718	N/A	54483	Toy6P6	64101	HDJ3B
6P9	Glacier Green Metallic	Toy6P9	F2721	5333	54760	Toy6P9	64198	HRE8B
748	Ocean Mist Metallic	Toy748	L9679	4636	53004	Toy748	91343	PT69B
751	Evergreen Pearl	Toy751	H9881	4746	47857	Toy751	60290	4SS9B
754	Paradise Blue Metallic	Toy754	F0893	5043	51166	Toy754	53753	8VR3B
756	Light Turquoise Pearl	Toy756	F1856	5171	52891	Toy756	61954	BAB1B
8K0	Night Shadow Pearl	Toy8K0	N9925	4910	49707	Toy8K0	50887	6ED7B
8K1	Orchid Blue Pearl	Toy8K1	F0605	5044	51167	Toy8K1	53510	7DJ8B
8K4	Confetti Blue Metallic	Toy8K4	F0699	5196	53005	Toy8K4	53552	7DK2B
8K6	Cobalt Blue Metallic	Toy8K6	F0892	5045	51168	Toy8K6	53754	8VR2B
8K8	Brilliant Blue Pearl	Toy8K8	F1800	5161	52884	Toy8K8	54221	ARC7B
8K9	Bright Iris Pearl	Toy8K9	F1038	5051	51169	Toy8K9	53728	7PP9B

1997 TOYOTA PAINT CODES AND COLOR NAMES (cont'd)

COLOR CODE	COLOR NAME	BASF	DUPONT	PPG	SHERWIN–WILLIAMS	SIKKENS	SPIES–HECKER	ICI AUTO COLOR
8L3	Blue Velvet Pearl	Toy8L3	F2239	5328	54032	Toy8L3	54676	FRC7B
8L5	Royal Sapphire Pearl	Toy8L5	F2728	5329	54485	Toy8L5	55068	HDJ4B
8L6	Azure Blue Pearl	Toy8L6	F2058	5205	53071	Toy8L6	54561	ETB8B
8L7	Stellar Blue Pearl	Toy8L7	F2059	5206	53072	Toy8L7	54562	ETB9B
925	Purple Storm Metallic	Toy925	L9681	5197	53006	Toy925	91614	PT74B
926	Lavender Steel Metallic	Toy926	F2060	5207	53073	Toy926	40582	ETC1B
927	Shadow Plum Pearl	Toy927	F0899	5053	51170	Toy927	80374	7PR2B
930	Blue Dusk Pearl	Toy930	F2723	5330	54758	Toy930	40713	HRE6B
931	Frosted Iris Metallic	Toy931	F2724	5331	54759	Toy931	40714	HRE7B
932	Misty Plum Metallic	Toy932	F2267	5284	53981	Toy932	40663	GNL8B
933	Fiesta Blue Metallic	Toy933	F2695	5291	54297	Toy933	40664	GNM3B
936	Deep Violet Pearl	Toy936	F2726	5334	54761	Toy936	40715	HRE9B

TWO TONE COMBINATIONS

2AB	1A5 Desert Dune Pearl 1A6 Moonglow Pearl	Toy1A5 Toy1A6	F1458 F1459	36090 36091	52139 52140	Toy1A5 Toy1A6	72759 72760	8NH3B 8NH4B
2AC	6M1 Dark Emerald Pearl 1A6 Moonglow Pearl	Toy6M1 Toy1A6	W9542 F1459	4595 36091	46589 52140	Toy6M1 Toy1A6	99746 72760	PM72B 8NH4B
2BV	6N7 Sierra Green Metallic 6P0 Gray/Green Metallic	Toy6N7 Toy6P0	F1036 F1799	5047 5325	51163 52883	Toy6N7 Toy6P0	61361 61753	7PP7B ARC5B
28X	196 Pewter Pearl 202 Black	Toy196 Toy202	H9878 F0220	4742 9300	47605 1738SW 8803MS	Toy196 Toy202	70401 79335	4226B TH21B

NOTE: Standox uses the Toyota color code to identify the color.
Example: Toyota color code 056 = Standox 056

For additional information about color matching Toyota vehicles, refer to the repainting section of the Toyota Fundamental Painting procedure manual (part # 00400–BR024) or contact your regional office to obtain information about Toyota Collision Repair and Refinish Training Programs.