TABLE OF CONTENTS

SECTION		PAGE	
1	INTRODUCTION	3	1
2	THINGS TO KNOW BEFORE STARTING YOUR VEHICLE	9	2
3	UNDERSTANDING THE FEATURES OF YOUR VEHICLE	63	3
4	UNDERSTANDING YOUR INSTRUMENT PANEL	139	4
5	STARTING AND OPERATING	207	5
6	WHAT TO DO IN EMERGENCIES	261	6
7	MAINTAINING YOUR VEHICLE	277	7
8	MAINTENANCE SCHEDULES	329	8
9	IF YOU NEED CONSUMER ASSISTANCE	349	9
10	INDEX	359	10

Downloaded from www.Manualslib.com manuals search engine

Downloaded from www.Manualslib.com manuals search engine

INTRODUCTION

CONTENTS

■ Introduction 4
■ How To Use This Manual 4
■ Warnings And Cautions 6
■ Vehicle Identification Number 6
■ Vehicle Modifications / Alterations 7

Downloaded from www.Manualslib.com manuals search engine

INTRODUCTION

This manual has been prepared with the assistance of service and engineering specialists to acquaint you with the operation and maintenance of your new vehicle. It is supplemented by a Warranty Information Booklet and various customer oriented documents. You are urged to read these publications carefully. Following the instructions and recommendations in this manual will help assure safe and enjoyable operation of your vehicle.

NOTE: After you read the manual, it should be stored in the vehicle for convenient reference and remain with the vehicle when sold, so that the new owner will be aware of all safety warnings.

When it comes to service, remember that your dealer knows your vehicle best, has the factory-trained technicians and genuine Mopar® parts, and is interested in your satisfaction.

WARNING!

Engine exhaust, some of its constituents, and certain vehicle components contain or emit chemicals known to the State of California to cause cancer and birth defects or other reproductive harm. In addition, certain fluids contained in vehicles and certain products of component wear contain or emit chemicals known to the State of California to cause cancer and birth defects or other reproductive harm.

HOW TO USE THIS MANUAL

Consult the table of contents to determine which section contains the information you desire.

The detailed index, at the rear of this manual, contains a complete listing of all subjects.

Consult the following table for a description of the symbols that may be used on your vehicle or throughout this owner's manual:

Downloaded from www.Manualslib.com manuals search engine

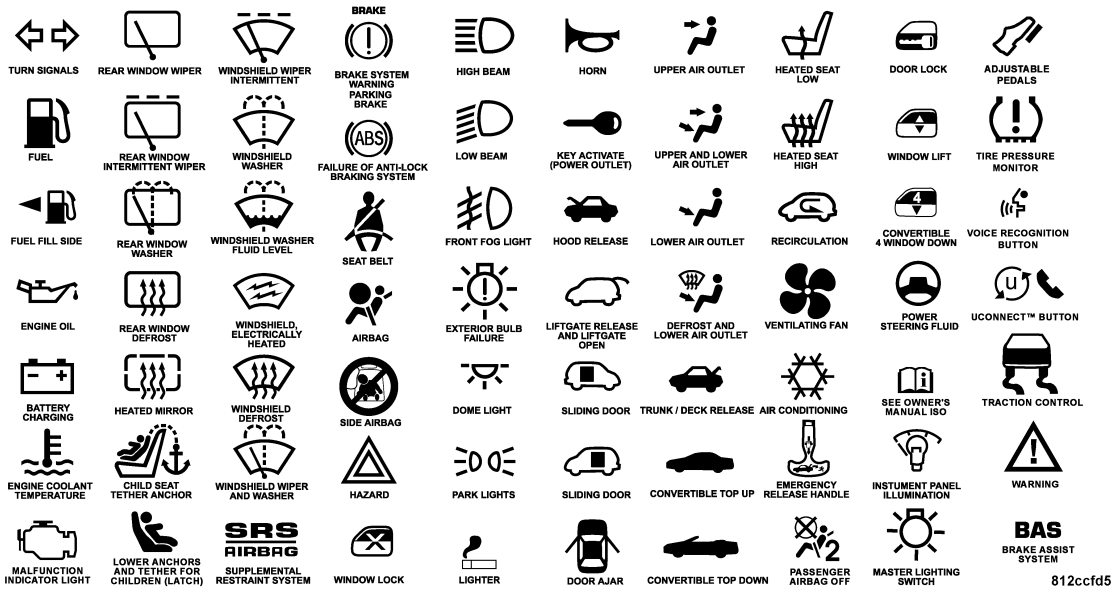

Downloaded from www.Manualslib.com manuals search engine

WARNINGS AND CAUTIONS

This manual contains **WARNINGS** against operating procedures which could result in an accident or bodily injury. It also contains **CAUTIONS** against procedures which could result in damage to your vehicle. If you do not read this entire manual you may miss important information. Observe all Warnings and Cautions.

VEHICLE IDENTIFICATION NUMBER

The vehicle identification number (VIN) is found on the left front corner of the instrument panel, visible from outside of the vehicle through the windshield. This number also appears on the Automobile Information Disclosure Label affixed to a window on your vehicle. Save this label for a convenient record of your vehicle identification number and optional equipment.

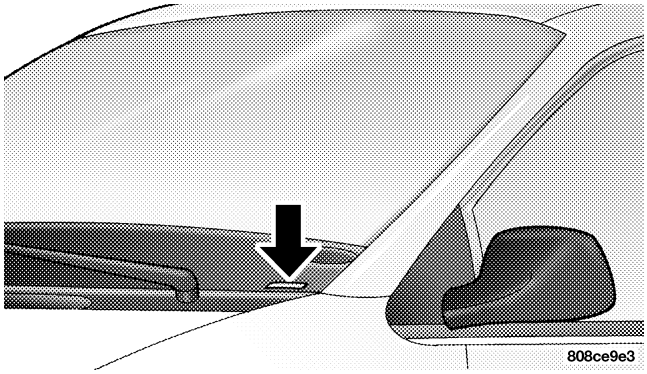

NOTE: It is illegal to remove the VIN plate.

Downloaded from www.Manualslib.com manuals search engine

VEHICLE MODIFICATIONS / ALTERATIONS

WARNING!

Any modifications or alterations to this vehicle could seriously affect its roadworthiness and safety and may lead to an accident resulting in serious injury or death.

Downloaded from www.Manualslib.com manuals search engine

Downloaded from www.Manualslib.com manuals search engine

THINGS TO KNOW BEFORE STARTING YOUR VEHICLE

CONTENTS

■ A Word About Your Keys 11
- □ Ignition Key Removal 11
- □ Key-In-Ignition Reminder 12

■ Sentry Key 12
- □ Replacement Keys 14
- □ Customer Key Programming 14
- □ General Information 15

■ Illuminated Entry System 15

■ Door Locks 16
- □ Manual Door Locks 16
- □ Power Door Locks 16
- □ Child Protection Door Lock 18

■ Remote Keyless Entry 19
- □ To Unlock The Doors And Liftgate 20
- □ To Lock The Doors And Liftgate 21
- □ Using The Panic Alarm 21
- □ To Program Transmitters 21
- □ To Open/Close Power Liftgate — If Equipped . .22

Downloaded from www.Manualslib.com manuals search engine

- To Turn Off "Flash Lights On Lock/Unlock" . . .22
- General Information 23
- Transmitter Battery Service 23

■ Vehicle Theft Alarm 24

■ Liftgate 26
- Power Liftgate — If Equipped 27

■ Windows 29
- Power Windows 29

■ Occupant Restraints 30
- Lap/Shoulder Belts 31
- Lap/Shoulder Belt Untwisting Procedure 37
- Seat Belt Pretensioners 39
- Enhanced Driver Seat Belt Reminder System (BeltAlert) 39
- Seat Belts And Pregnant Women 41
- Seat Belt Extender 41
- Driver And Front Passenger Supplemental Restraint System - Airbag 42
- Side Airbags Supplemental Restraint System (SRS) — If Equipped 48
- Child Restraint 51

■ Engine Break-In Recommendations 59

■ Safety Tips 60
- Exhaust Gas 60
- Safety Checks You Should Make Inside The Vehicle 61
- Periodic Safety Checks You Should Make Outside The Vehicle 62

Downloaded from www.Manualslib.com manuals search engine

A WORD ABOUT YOUR KEYS

You can insert the double sided keys into the locks with either side up.

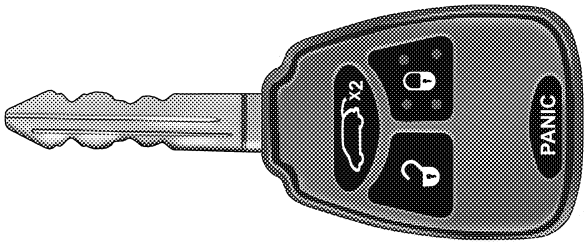

811b8b06

The dealer that sold you your new vehicle has the key code numbers for your vehicle locks. These numbers can be used to order duplicate keys from your dealer. Ask your dealer for these numbers and keep them in a safe place.

Ignition Key Removal

The shift lever must be in PARK. Turn the key to the LOCK position, then remove the key.

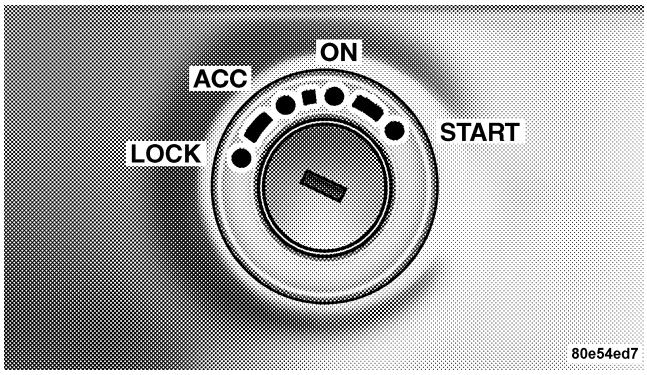

80e54ed7

Downloaded from www.Manualslib.com manuals search engine

NOTE: The power window switches, radio, power sunroof, and power outlets will remain active for up to 45 seconds after the ignition switch has been turned off. Opening either front door will cancel this feature.

WARNING!

Leaving children in a vehicle unattended is dangerous for a number of reasons. A child or others could be injured. Children should be warned not to touch the parking brake, brake pedal or the gear selector lever. Don't leave the keys in the ignition. A child could operate power windows, other controls, or move the vehicle.

CAUTION!

An unlocked car is an invitation to thieves. Always remove key from the ignition and lock all doors when leaving the vehicle unattended.

Key-In-Ignition Reminder

If you open the driver's door and the key is in the ignition switch, a chime will sound to remind you to remove the key.

SENTRY KEY

The Sentry Key Immobilizer System prevents unauthorized operation of the vehicle by disabling the engine. The system will shut the engine off after 2 seconds of running if an invalid key is used to start the vehicle. This system utilizes ignition keys which have an electronic

Downloaded from www.Manualslib.com manuals search engine

chip (transponder) embedded into them. Only keys that have been programmed to the vehicle can be used to start and operate the vehicle.

The Sentry Key Immobilizer System does not need to be armed or activated. Operation of the system is automatic regardless of whether or not the vehicle is locked or unlocked. During normal operation, the Theft Alarm/ Immobilizer Light will come on for three (3) seconds immediately after the ignition switch is turned on for a bulb check. Afterwards, if the bulb remains on, this indicates a problem with the electronics.

If the bulb begins to flash after the bulb check, this indicates that an invalid key has been used to start the vehicle. Both of these conditions will result in the engine being shut off after two (2) seconds of running.

Keep in mind that a key which has not been programmed is also considered an invalid key even if it is cut to fit the ignition lock cylinder for that vehicle.

If the Theft Alarm/Immobilizer Light comes on during normal vehicle operation (vehicle has been running for longer than 10 seconds), a fault has been detected in the electronics and the vehicle should be serviced as soon as possible.

NOTE:

- The Sentry Key Immobilizer System is not compatible with remote starting systems. Use of these systems may result in vehicle starting problems and loss of security protection.
- Exxon/Mobil Speed Pass,™ additional Sentry Keys, or any other transponder equipped components on the same keychain will **not** cause a key-related (transponder) fault unless the additional part is **physically held against the ignition key** being used when starting the vehicle. Cell phones, pagers, or other RF electronics will not cause interference with this system.

Downloaded from www.Manualslib.com manuals search engine

All of the keys provided with your new vehicle have been programmed to the vehicle electronics.

Replacement Keys

NOTE: Only keys that have been programmed to the vehicle electronics can be used to start the vehicle. Once a Sentry Key has been programmed to a vehicle, it can not be programmed to any other vehicle.

At the time of purchase, the original owner is provided with a four digit PIN number. This number is required for dealer replacement of keys. Duplication of keys may be performed at an authorized dealer or by using the Customer Key Programming procedure. This procedure consists of programming a blank key to the vehicle electronics. A blank key is one which has never been programmed.

NOTE: When having the Sentry Key Immobilizer System serviced, bring all vehicle keys with you to the dealer.

Customer Key Programming

You can program new sentry keys to the system if you have two valid sentry keys by performing the following procedure:

1. Cut the additional Sentry Key Transponder blank(s) to match the ignition switch lock cylinder key code.

2. Insert the first valid key into the ignition switch and turn the ignition switch ON for at least 3 seconds but no longer than 15 seconds. Turn the ignition switch OFF and remove the first key.

3. Insert the second valid key and turn the ignition switch ON within 15 seconds. After ten seconds a chime will sound and the Theft Alarm Light will begin to flash. Turn the ignition switch OFF and remove the second key.

Downloaded from www.Manualslib.com manuals search engine

4. Insert a blank Sentry Key into the ignition switch and turn the ignition switch ON within 60 seconds. After 10 seconds a single chime will sound. The Theft Alarm Light will stop flashing, turn on for 3 seconds; then turn off.

The new Sentry Key has been programmed. **The Keyless Entry Transmitter will also be programmed during this procedure.**

Repeat this procedure to program up to a total of 8 keys. If you do not have a programmed sentry key, contact your dealer for details.

NOTE: If a programmed key has been lost, see your dealer to have all remaining keys erased from the systems memory. The remaining keys must then reprogrammed. This will prevent the lost key from starting your vehicle. All vehicle keys must be taken to the dealer at the time of service to be reprogrammed.

General Information

The Sentry Key system complies with FCC rules part 15 and with RSS-210 of Industry Canada. Operation is subject to the following conditions:

- This device may not cause harmful interference.
- This device must accept any interference that may be received, including interference that may cause undesired operation.

ILLUMINATED ENTRY SYSTEM

The courtesy lights will turn on when you use the keyless entry transmitter or open the doors.

The lights will fade to off after about 30 seconds or they will immediately fade to off once the ignition switch is turned on.

NOTE: The overhead console, door courtesy, liftgate and reading lights will not operate if the dimmer control is in the “defeat” position (extreme downward position).

Downloaded from www.Manualslib.com manuals search engine

DOOR LOCKS

Manual Door Locks

Lock the doors by pushing up on the lock knob on each door trim panel.

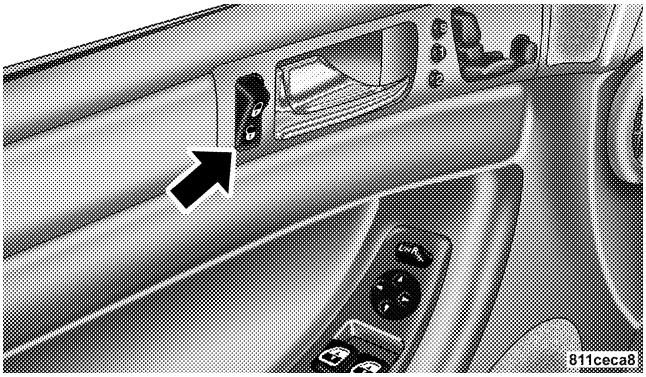

If the lock knob is up when you shut the door, the door will lock. Therefore, make sure the keys are not inside the vehicle before closing the door.

WARNING!

- **For personal security and safety in the event of an accident, lock the vehicle doors as you drive as well as when you park and leave the vehicle.**
- **When leaving the vehicle always remove the key from the ignition lock, and lock your vehicle. Do not leave children unattended in the vehicle, or with access to an unlocked vehicle. Unsupervised use of vehicle equipment may cause severe personal injuries and death.**

Power Door Locks

A power door lock switch is on each front door trim panel. Use this switch to lock or unlock the doors.

Downloaded from www.Manualslib.com manuals search engine

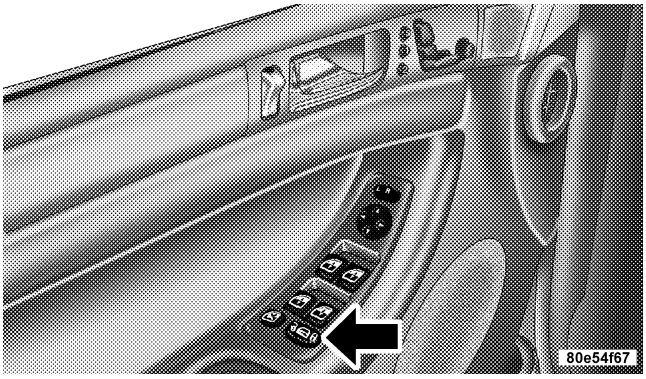

If you press the power door lock switch while the key is in the ignition, and any front door is open, the power locks will not operate. This prevents you from accidentally locking your keys in the vehicle. Removing the key or closing the door will allow the locks to operate. A chime will sound if the key is in the ignition and a door is open, as a reminder to remove the key.

Automatic Door Locks

The doors will lock automatically on vehicles with power door locks if:

1. The Auto Lock feature is enabled,
2. the transmission is in gear,
3. all doors are closed
4. the vehicle speed is above 15 mph (24 km/h) and
5. the doors were not previously locked using the power door lock switch or remote keyless entry transmitter.

The Automatic Door Locks can be enabled or disabled by performing the procedure in the Electronic Vehicle Information Center (EVIC), Customer Programmable Features section.

Downloaded from www.Manualslib.com manuals search engine

Auto Unlock

The doors will unlock automatically on vehicles with power door locks if:

1. The Auto Unlock feature is enabled,
2. the transmission was in gear and the vehicle speed returned to 0 mph (0 km/h),
3. the transmission is in NEUTRAL or PARK,
4. the driver door is opened (excluding liftgate),
5. the doors were not previously unlocked and
6. the vehicle speed is 0 mph (0 km/h).

The Auto Unlock feature can be enabled or disabled by performing the procedure in the Electronic Vehicle Information Center (EVIC), Customer Programmable Features section.

NOTE: Use the Auto Door Locks and Auto Unlock features in accordance with local laws.

Child Protection Door Lock

To provide a safer environment for small children riding in the rear seats, the rear doors are equipped with a child protection door lock system.

WARNING!
Avoid trapping anyone in the vehicle in a collision. Remember that the rear doors can only be opened from the outside when the child protection locks are engaged.

Downloaded from www.Manualslib.com manuals search engine

To activate the system, open the rear door and move the child lock control, located near the door's rear latch, to the ON position.

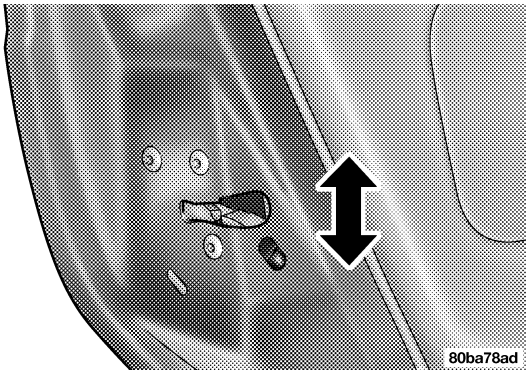

When the child lock system is engaged the door can be opened only by using the outside door handle even though the inside door lock is in the unlocked position.

REMOTE KEYLESS ENTRY

This system allows you to lock or unlock the doors and liftgate, and activate the panic alarm from distances up to about 23 feet (7 meters) using a hand held radio transmitter. The transmitter need not be pointed at the vehicle to activate the system.

Downloaded from www.Manualslib.com manuals search engine

NOTE: If the key is in the ignition switch, then all buttons on that transmitter will be disabled. The buttons on the remaining transmitters will work. If the vehicle is shifted out of PARK, all the transmitter buttons are disabled for all keys.

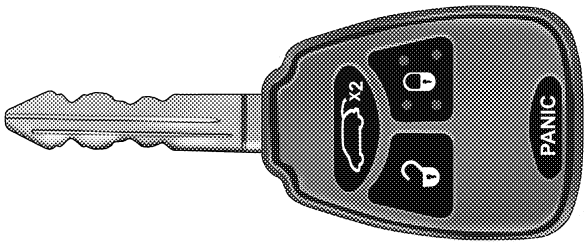

811b8b06

To unlock the doors and liftgate:

Press and release the UNLOCK button on the transmitter once to unlock the driver's door, or twice to unlock all doors and liftgate. The illuminated entry system also turns on.

NOTE: If desired, the "Remote Unlock Driver's Door 1st" feature can be turned on and off by referring to the Customer Programmable Features of the "Electronic Vehicle Information Center (EVIC)" section or by following these steps.

1. Press the UNLOCK button for 4 to 10 seconds.

2. While the UNLOCK button is pressed, (after 4 seconds) press the LOCK button. Release both buttons.

The "Remote Unlock Driver's Door 1st" feature can be reactivated by repeating this procedure.

Downloaded from www.Manualslib.com manuals search engine

To lock the doors and liftgate:

Press and release the LOCK button on the transmitter to lock all doors and liftgate. The horn will chirp once to acknowledge the signal. If desired, the "Sound Horn On Lock" feature can be turned on and off by referring to the Customer Programmable Features of the "Electronic Vehicle Information Center (EVIC)" section or by following these steps.

1. Press the LOCK button for 4 to 10 seconds.

2. While the LOCK button is pressed (after 4 seconds), press the PANIC button. Release both buttons.

The "Sound Horn On Lock" feature can be reactivated by repeating this procedure.

Using The Panic Alarm:

To turn the panic alarm feature ON or OFF, press and hold the PANIC button on the transmitter for at least one second and release. When the panic alarm is on, the headlights and park lights will flash, the horn will pulse on and off and the interior lights will turn on.

The panic alarm will stay on for 3 minutes unless you turn it off by pressing the PANIC button a second time or turn the ignition switch to the ON position.

NOTE: When you turn off the panic alarm by pressing the PANIC button a second time, you may have to be closer to the vehicle due to the radio frequency noises of the system.

To Program Transmitters:

Refer to SENTRY KEY "Customer Key Programming."

If you do not have a programmed transmitter, contact your dealer for details.

Downloaded from www.Manualslib.com manuals search engine

To Open/Close Power Liftgate — If Equipped

Press the LIFTGATE button twice within five seconds to open/close the power liftgate. The liftgate will beep for 2 seconds and then open/close. If the button is pushed while the liftgate is being power closed, the liftgate will reverse to the full open position.

If the liftgate is locked and is not equipped with a powered liftgate, pressing the button will result in the liftgate becoming unlocked for 30 seconds allowing you to manually access the liftgate area. The liftgate will re-lock automatically within 10 seconds once the liftgate is closed.

To Turn Off "Flash Lights On Lock/Unlock"

NOTE: If desired, the "Flash Lights On Lock/Unlock" feature can be turned on and off by referring to the Customer Programmable Features of the "Electronic Vehicle Information Center (EVIC)" section or by following these steps.

1. Press the LOCK button for 4 to 10 seconds.

2. While the LOCK button is pressed, (after 4 seconds) press the UNLOCK button. Release both buttons.

The "Flash Lights On Lock/Unlock" feature can be reactivated by repeating this procedure. The table below explains the Lamp Flash options.

Function	Which Turn Signal Lamps	Number of Flashes
Lock	All	1
Unlock 1st Press	Driver's Side	2
Unlock All Doors	All	2
Liftgate	All	2

Downloaded from www.Manualslib.com manuals search engine

General Information

This device complies with part 15 of the FCC rules and RSS 210 of Industry Canada. Operation is subject to the following conditions:

- This device may not cause harmful interference.
- This device must accept any interference received, including interference that may cause undesired operation.

If your Remote Keyless Entry transmitter fails to operate from a normal distance, check for these two conditions.

1. A weak battery in the transmitter. The expected life of the battery is a minimum of three years.

2. Closeness to a radio transmitter such as a radio station tower, airport transmitter, and some mobile or CB radios.

Transmitter Battery Service

The recommended replacement battery is one CR2032 battery.

NOTE: Do not touch the battery terminals that are on the back housing or the printed circuit board.

1. With the transmitter buttons facing down, use a small screwdriver or similar flat object to pry the two halves of the transmitter apart. Make sure not to damage the rubber gasket during removal.

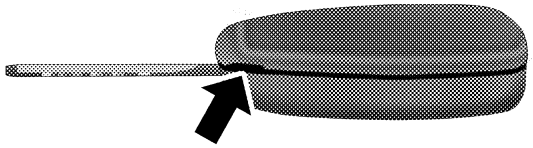

81182c72

Downloaded from www.Manualslib.com manuals search engine

2. Remove and replace the battery. Avoid touching the new battery with your fingers. Skin oils may cause battery deterioration. If you touch a battery, clean it with rubbing alcohol.

3. To reassemble the transmitter case, snap the two halves together. Make sure there is an even "gap" between the two halves. Test transmitter operation.

VEHICLE THEFT ALARM

This system monitors the vehicle doors and ignition switch for unauthorized entry or operation. When the alarm is activated, the system provides both audible and visual signals. The horn will pulse, headlights/park lights will flash, the Vehicle Theft Alarm/Immobilizer light, located on the instrument panel below the Electronic Vehicle Information Center buttons will flash, and the vehicle will not start. If the alarm is triggered and no action is taken to disarm it, the system will turn off the horn after three minutes and after 15 minutes of light only operation the system will then rearm itself.

To arm the system: Remove the key from the ignition switch and either:

1. Press a power door lock switch while the driver's or passenger's door is open.

2. Press the LOCK button on the keyless entry transmitter.

After the last door is closed, or if all doors are closed, the system will arm itself in about 16 seconds. During that time, the Vehicle Theft Alarm/Immobilizer light will flash. If it does not illuminate, the system is not arming. If you open a door during this arming period, the system will cancel the arming process. You must repeat one of the previously described arming sequences to rearm the system.

Downloaded from www.Manualslib.com manuals search engine

To disarm the system: Press the UNLOCK button on the keyless entry transmitter. Also, using a valid sentry key and moving the ignition switch to the ON/START position will disarm the system. If you disarm the system and access the liftgate area, the system must be rearmed, as described previously, when closing the liftgate. If something has triggered the system in your absence, the horn will sound three times when you disarm the system. Check the vehicle for tampering.

NOTE:

- The driver's door key cylinder and the liftgate button on the keyless entry transmitter cannot arm or disarm the system.
- Once the alarm is set, and the liftgate button on the keyless entry transmitter is pressed, on a non-power liftgate vehicle, you have a 30 second one time access into the liftgate area. If the liftgate is not opened within 30 seconds the liftgate will automatically re-lock within 10 seconds.
- The system remains armed during liftgate entry, pressing the liftgate button will not disarm the system, if someone enters the vehicle through the liftgate and opens any door the alarm will sound.
- When the system is armed, the doors can not be unlocked from the interior power door lock switches.

The Vehicle Theft Alarm system is designed to protect your vehicle, however, you can create conditions where the system will give you a false alarm. If one of the previously described arming sequences has occurred, the system will arm regardless of whether you are in the vehicle or not. If you remain in the vehicle and open a door, the alarm will sound. If this occurs, disarm the system.

Downloaded from www.Manualslib.com manuals search engine

The alarm system will be activated when the battery is connected if the system was previously armed. The exterior lights will flash, the horn will sound, and the ignition will not start the vehicle. If this occurs, disarm the system.

LIFTGATE

The liftgate can be unlocked using the remote keyless entry or by activating the power door lock switches located on the front doors.

Once unlocked, the liftgate can be opened or closed. To open the liftgate, depress the liftgate release switch located in the exterior handle and pull the liftgate open with one fluid motion.

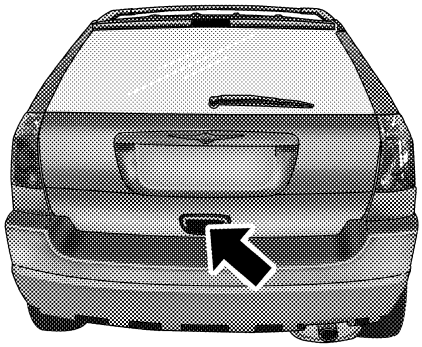

8107301d

The liftgate will not manually open if the vehicle is in gear or the vehicle speed is above 0 mph (0 km/h).

NOTE:

- If a power malfunction to the power liftgate latch should occur, an emergency liftgate latch release can

Downloaded from www.Manualslib.com manuals search engine

be used to open the liftgate. The emergency liftgate latch release can be accessed through a snap-in cover located on the liftgate trim panel.

- If the liftgate is locked and is not equipped with a powered liftgate, pressing the button on the remote keyless entry transmitter will result in the liftgate becoming unlocked for 30 seconds allowing you to manually access the liftgate area. The liftgate will re-lock automatically within 10 seconds once the liftgate is closed.

Power Liftgate — If Equipped

The power liftgate may be opened manually or by using the button on the remote keyless entry transmitter. Press the button on the remote keyless entry transmitter twice within five seconds, to open the power liftgate. Once the liftgate is fully open, pressing the button twice within five seconds a second time will close the liftgate.

The power liftgate may also be opened by pressing the switch located on the overhead console.

81003315

A beeping signal will sound two seconds before the liftgate starts to open or close.

Downloaded from www.Manualslib.com manuals search engine

WARNING!

During power operation, personal injury or cargo damage may occur. Ensure the liftgate travel path is clear. Make sure the liftgate is closed and latched before driving away.

NOTE:

- If anything obstructs the power liftgate while it is closing or opening, the liftgate will automatically reverse to the closed or open position, provided it meets sufficient resistance.
- There are also pinch sensors attached to the side of the liftgate. Light pressure anywhere along these strips will cause the liftgate to return to the open position.
- The power liftgate must be in the full open position for any of the close buttons to operate. If the liftgate is not fully open, press the open button to fully open the liftgate and then press close.
- If the liftgate release switch is activated while the power liftgate is closing, the liftgate will reverse to the full open position.
- The power liftgate switches will not operate if the vehicle is in gear or the vehicle speed is above 0 mph (0 km/h).
- The power liftgate will not operate in temperatures below −22° F (−30° C) or temperatures above 150° F (65° C). Be sure to remove any build-up of snow or ice from the liftgate before pressing any of the power liftgate switches.

Downloaded from www.Manualslib.com manuals search engine

- If the power liftgate encounters multiple obstructions within the same cycle, the system will automatically stop and must be opened or closed manually.

WARNING!

- **Driving with the liftgate open can allow poisonous exhaust gases into your vehicle. You and your passengers could be injured by these fumes. Keep the liftgate closed when you are operating the vehicle.**
- **If you are required to drive with the liftgate open, make sure that all windows are closed, and the climate control blower switch is set at high speed. DO NOT use the recirculation mode.**

Gas props support the liftgate in the open position. However, because the gas pressure drops with temperature, it may be necessary to assist the props when opening the liftgate in cold weather.

WINDOWS

Power Windows

The window controls on the driver's door control all the door windows.

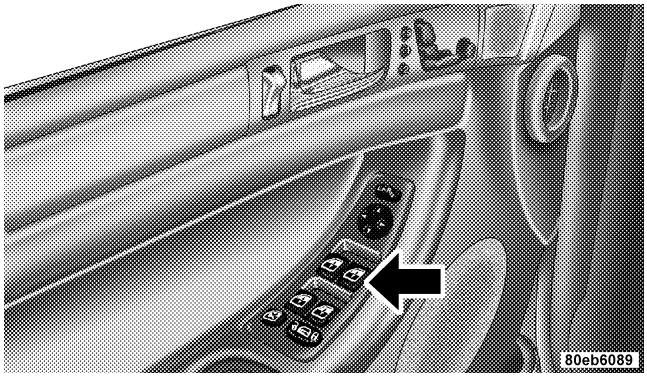

There are single window controls on each passenger door trim panel which operate the passenger door windows.

Downloaded from www.Manualslib.com manuals search engine

The window controls will operate only when the ignition switch is in the ON or ACCESSORY position.

The window lock switch on the driver's door allows you to disable the window controls on the passenger doors. When the lock switch is pressed the window controls on the passenger doors will not illuminate and the passenger windows will be disabled.

Auto Down Feature

All the power window switches have an auto down feature. Press the window switch to the second detent, release, and the window will go down automatically.

To open the window part way, press the window switch to the first detent and release it when you want the window to stop.

The power window switches remain active for up to 45 seconds after the ignition switch has been turned off. Opening either front door will cancel this feature.

Wind Buffeting

Wind buffeting can be described as the perception of pressure on the ears or a helicopter type sound in the ears. Your vehicle may exhibit wind buffeting with the windows down, or the sunroof (if equipped) in certain open or partially open positions. This is a normal occurrence and can be minimized. If the buffeting occurs with the rear windows open, open the front and rear windows together to minimize the buffeting. If the buffeting occurs with the sunroof open, adjust the sunroof opening to minimize the buffeting.

OCCUPANT RESTRAINTS

Some of the most important safety features in your vehicle are the restraint systems. These include the front and rear seat belts for the driver and all passengers, front airbags for both the driver and front passenger, driver inflatable knee blocker and if equipped, left and right side curtain airbags for the driver and passengers seated next to a window. If you will be carrying children too small for adult-size seat

Downloaded from www.Manualslib.com manuals search engine

belts, your seat belts or the LATCH feature (refer to the Child Restraint section in this manual), can be used to hold infant and child restraint systems.

NOTE: The front airbags have a multi stage inflator design. This allows the airbag to have different rates of inflation that are based on collision severity.

Please pay close attention to the information in this section. It tells you how to use your restraint system properly to keep you and your passengers as safe as possible.

WARNING!
In a collision, you and your passengers can suffer much greater injuries if you are not properly buckled up. You can strike the interior of your vehicle or other passengers, or you can be thrown out of the vehicle. Always be sure you and others in your vehicle are buckled up properly.

Buckle up even though you are an excellent driver, even on short trips. Someone on the road may be a poor driver and cause a collision that includes you. This can happen far away from home or on your own street.

Research has shown that seat belts save lives, and they can reduce the seriousness of injuries in a collision. Some of the worst injuries happen when people are thrown from the vehicle. Seat belts reduce the possibility of ejection and the risk of injury caused by striking the inside of the vehicle. **Everyone** in a motor vehicle should be belted at all times.

Lap/Shoulder Belts

All the seats in your vehicle are equipped with Lap/Shoulder Belts.

Downloaded from www.Manualslib.com manuals search engine

The belt webbing retractor is designed to lock during very sudden stops or collisions. This feature allows the shoulder part of the belt to move freely with you under normal conditions. But in a collision, the belt will lock and reduce the risk of your striking the inside of the vehicle or being thrown out.

WARNING!

- **It is extremely dangerous to ride in a cargo area, inside or outside of a vehicle. In a collision, people riding in these areas are more likely to be seriously injured or killed.**
- **Do not allow people to ride in any area of your vehicle that is not equipped with seats and seat belts.**
- **Be sure everyone in your vehicle is in a seat and using a seat belt properly.**

WARNING!

- **Wearing a seat belt incorrectly is dangerous. Seat belts are designed to go around the large bones of your body. These are the strongest parts of your body and can take the forces of a collision the best.**
- **Wearing your belt in the wrong place could make your injuries in a collision much worse. You might suffer internal injuries, or you could even slide out of part of the belt. Follow these instructions to wear your seat belt safely and to keep your passengers safe, too.**
- **Two people should never be belted into a single seat belt. People belted together can crash into one another in a collision, hurting one another badly. Never use a lap/shoulder belt or lap belt for more than one person, no matter what their size.**

Downloaded from www.Manualslib.com manuals search engine

Lap/Shoulder Belt Operating Instructions

1. Enter the vehicle and close the door. Sit back and adjust the seat.

2. The seat belt latch plate is near the seatback of the front seats and next to your arm in the rear seats. Grasp the latch plate and pull out the belt. Slide the latch plate up the webbing as far as necessary to allow the belt to go around your lap.

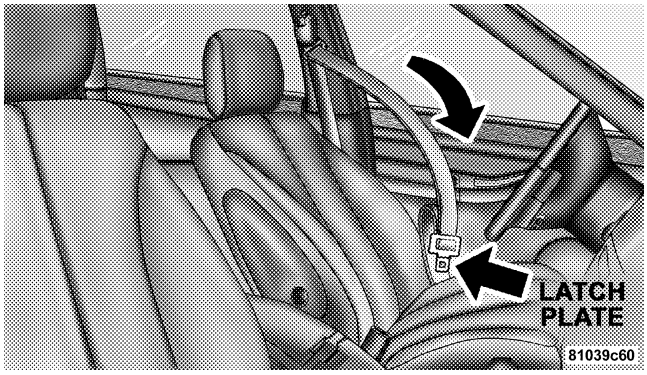

Downloaded from www.Manualslib.com manuals search engine

3. When the belt is long enough to fit, insert the latch plate into the buckle until you hear a "click".

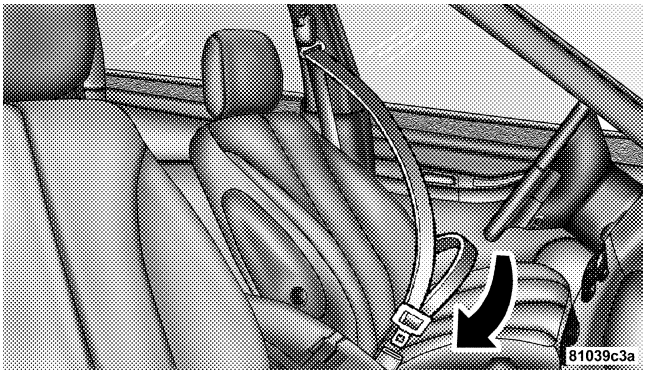

WARNING!

- **A belt that is buckled into the wrong buckle will not protect you properly. The lap portion could ride too high on your body, possibly causing internal injuries. Always buckle your belt into the buckle nearest you.**
- **A belt that is too loose will not protect you as well. In a sudden stop you could move too far forward, increasing the possibility of injury. Wear your seat belt snugly.**
- **A belt that is worn under your arm is very dangerous. Your body could strike the inside surfaces of the vehicle in a collision, increasing head and neck injury. A belt worn under the arm can cause internal injuries. Ribs aren't as strong as shoulder bones. Wear the belt over your shoulder so that your strongest bones will take the force in a collision.**
- **A shoulder belt placed behind you will not protect you from injury during a collision. You are more likely to hit your head in a collision if you do not wear your shoulder belt. The lap and shoulder belt are meant to be used together.**

Downloaded from www.Manualslib.com manuals search engine

4. Position the lap belt across your thighs, below your abdomen. To remove slack in the lap belt portion, pull up on the shoulder belt. To loosen the lap belt if it is too tight, tilt the latch plate and pull on the lap belt. A snug belt reduces the risk of sliding under the belt in a collision.

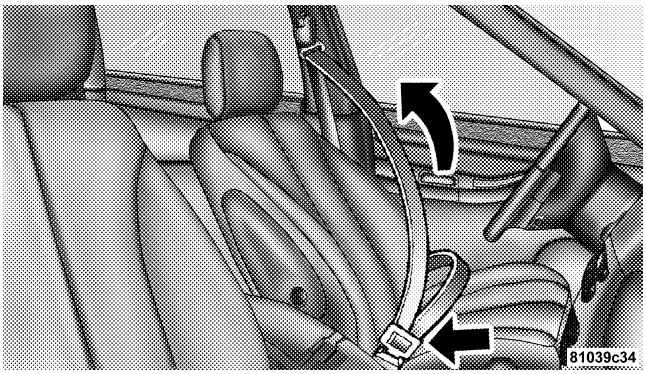

WARNING!

- **A lap belt worn too high can increase the risk of internal injury in a collision. The belt forces won't be at the strong hip and pelvic bones, but across your abdomen. Always wear the lap belt as low as possible and keep it snug.**
- **A twisted belt can't do its job as well. In a collision it could even cut into you. Be sure the belt is straight. If you can't straighten a belt in your vehicle, take it to your dealer and have it fixed.**

5. Position the shoulder belt on your chest so that it is comfortable and not resting on your neck. The retractor will withdraw any slack in the belt.

Downloaded from www.Manualslib.com manuals search engine

6. To release the belt, push the red button on the buckle. The belt will automatically retract to its stowed position. If necessary, slide the latch plate down the webbing to allow the belt to retract fully.

WARNING!

A frayed or torn belt could rip apart in a collision and leave you with no protection. Inspect the belt system periodically, checking for cuts, frays, or loose parts. Damaged parts must be replaced immediately. Do not disassemble or modify the system. Seat belt assemblies must be replaced after a collision if they have been damaged (bent retractor, torn webbing, etc.).

Adjustable Upper Shoulder Belt Anchorage

In the front seats, the shoulder belt anchorage can be adjusted upward or downward to help position the belt away from your neck. Press the button to release the anchorage, and then move it up or down to the position that serves you best.

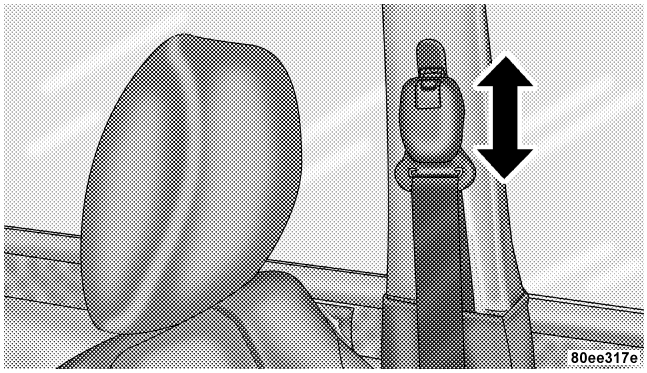

Downloaded from www.Manualslib.com manuals search engine

As a guide, if you are shorter than average, you will prefer a lower position, and if you are taller than average, you'll prefer a higher position. When you release the anchorage, try to move it up or down to make sure that it is locked in position.

Lap/Shoulder Belt Untwisting Procedure

Use the following procedure to untwist a twisted lap/shoulder belt.

1. Position the latch plate as close as possible to the anchor point.

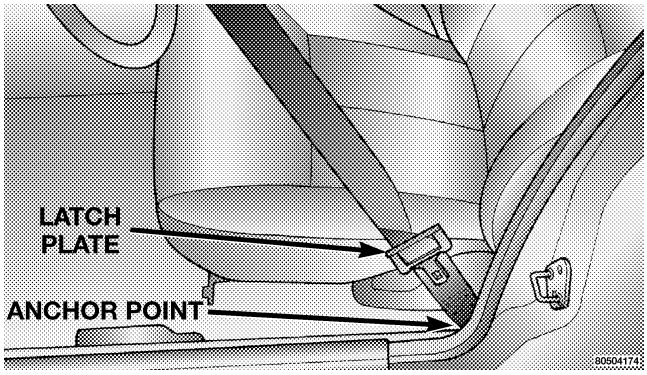

Downloaded from www.Manualslib.com manuals search engine

2. At about 6 to 12 inches (15 to 30 cm) above the latch plate, grasp and twist the belt webbing 180° to create a fold that begins immediately above the latch plate.

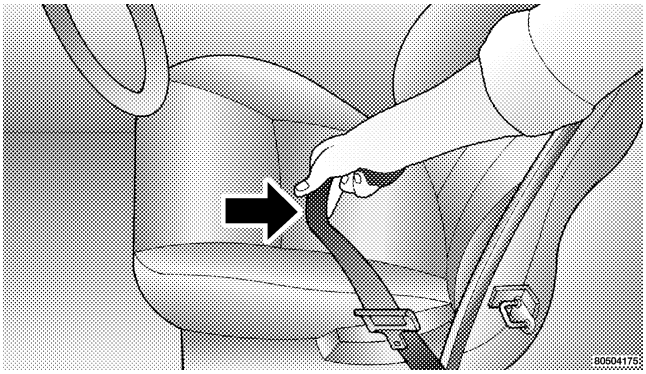

3. Slide the latch plate upward over the folded webbing. The folded webbing must enter the slot at the top of the latch plate.

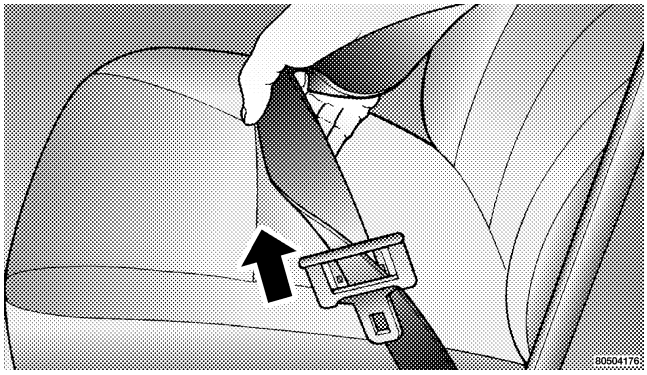

4. Continue to slide the latch plate up until it clears the folded webbing.

Downloaded from www.Manualslib.com manuals search engine

Seat Belt Pretensioners

The seat belts for both front seating positions are equipped with pretensioning devices that are designed to remove slack from the seat belt in the event of a collision. These devices improve the performance of the seat belt by assuring that the belt is tight about the occupant early in a collision. Pretensioners are designed to work for all size occupants.

NOTE: These devices are not a substitute for proper seat belt placement by the occupant. The seat belt still must be worn snugly and positioned properly.

The pretensioners are triggered by the front airbag control module (see Airbag Section). Like the front airbags, the pretensioners are single use items. After a collision that is severe enough to deploy the airbags and pretensioners, both must be replaced.

Enhanced Driver Seat Belt Reminder System (BeltAlert)

If the driver's seat belt has not been buckled within 60 seconds of starting the vehicle and if the vehicle speed is greater than 5 mph (8 km/h), the Enhanced Warning System (BeltAlert) will alert the driver to buckle their seat belt. The driver should also instruct all other occupants to buckle their seat belts. Once the warning is triggered, the Enhanced Warning System (BeltAlert) will continue to chime and flash the Seat Belt Warning Light for 96 seconds or until the driver's seat belt is buckled.

The Enhanced Warning System (BeltAlert) will be reactivated if the driver's seat belt is unbuckled for more than 10 seconds and the vehicle speed is greater than 5 mph (8 km/h).

Downloaded from www.Manualslib.com manuals search engine

The Enhanced Warning System (BeltAlert) can be enabled or disabled by your authorized dealer or by following these steps:

NOTE: The following steps must occur within the first 60 seconds of the ignition switch being turned to the ON or RUN position. DaimlerChrysler does not recommend deactivating the Enhanced Warning System (BeltAlert).

1. Turn the ignition switch to the OFF position and buckle the driver's seat belt.

2. Turn the ignition key to the RUN position (engine does not need to be running), and wait for the Seat Belt Warning Light to turn off.

3. Within 60 seconds of starting the vehicle, unbuckle and then re-buckle the driver's seat belt at least three times within 10 seconds, ending with the seat belt buckled.

NOTE: Watch for the Seat Belt Warning Light to turn on while unbuckling and off while re-buckling the seat belt. It may be necessary to retract the seat belt.

4. Turn off the engine. A single chime will sound to signify that you have successfully completed the programming.

The Enhanced Warning System (BeltAlert) can be reactivated by repeating this procedure.

NOTE: Although the Enhanced Warning System (BeltAlert) has been deactivated, the Seat Belt Warning Light will continue to illuminate while the driver's seat belt remains unbuckled.

Downloaded from www.Manualslib.com manuals search engine

Seat Belts and Pregnant Women

We recommend that pregnant women use the seat belts throughout their pregnancies. Keeping the mother safe is the best way to keep the baby safe.

Pregnant women should wear the lap part of the belt across the thighs and as snug across the hips as possible. Keep the belt low so that it does not come across the abdomen. That way the strong bones of the hips will take the force if there is a collision.

Seat Belt Extender

If a seat belt is too short, even when fully extended and when the adjustable upper shoulder belt anchorage (if equipped) is in its lowest position, your dealer can provide you with a seat belt extender. This extender should be used only if the existing belt is not long enough. When it is not required, remove the extender and stow it.

WARNING!

Using a seat belt extender when not needed can increase the risk of injury in a collision. Only use when the lap belt is not long enough when it is worn low and snug, and in the recommended seating positions. Remove and store the extender when not needed.

Downloaded from www.Manualslib.com manuals search engine

Driver and Front Passenger Supplemental Restraint System - Airbag

This vehicle has airbags for both the driver and front passenger as a supplement to the seat belt restraint systems. The driver's front airbag is mounted in the center of the steering wheel. The passenger's front airbag is mounted in the instrument panel, above the glove compartment. The words SRS AIRBAG are embossed on the airbag covers.

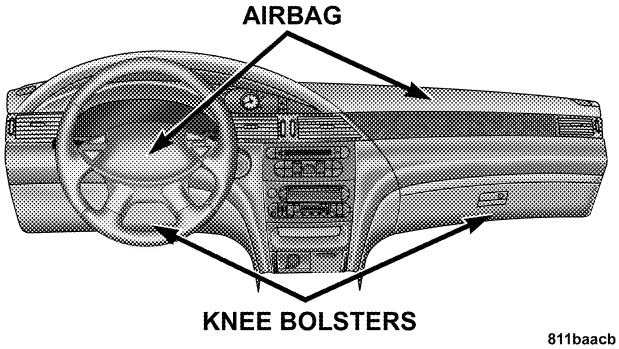

NOTE: The front airbags are certified to the Federal regulations that allow less forceful deployment in low speed collisions.

The front airbags have a multi stage inflator design. This allows the airbag to have different rates of inflation that are based on collision severity.

This vehicle may also be equipped with a driver inflatable knee blocker located on the instrument panel below the steering column.

This vehicle may also be equipped with left and right side curtain airbags to protect the driver and passengers sitting next to a window. If the vehicle is equipped with side curtain airbags, they are located above the side windows. Their covers are also labeled SRS AIRBAG.

Downloaded from www.Manualslib.com manuals search engine

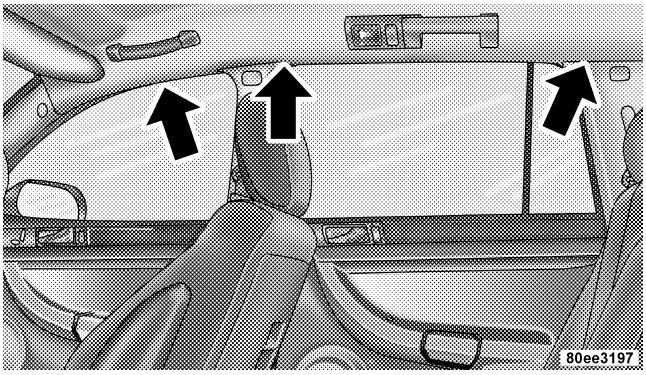

NOTE: Airbag covers may not be obvious in the interior trim; but they will open to allow airbag deployment.

WARNING!

- **Do not put anything on or around the airbag covers or attempt to manually open them. You may damage the airbags and you could be injured because the airbags are not there to protect you. These protective covers for the airbag cushions are designed to open only when the airbags are inflating.**
- **If your vehicle is equipped with left and right side curtain airbags, do not stack luggage or other cargo up high enough to block the location of the side curtain airbag. The area where the side curtain airbag is located should remain free from any obstructions.**
- **If your vehicle is equipped with left and right side curtain airbags, do not have any accessory items installed which will alter the roof, including adding a sunroof to your vehicle. Do not add roof racks that require permanent attachments (bolts or screws) for installation on the vehicle roof. Do not drill into the roof of the vehicle for any reason.**

Downloaded from www.Manualslib.com manuals search engine

Airbags inflate in moderate to high speed impacts. Along with seat belts, and pretensioners, front airbags work with the instrument panel knee blockers to provide improved protection for the driver and front passenger. Left and right side curtain airbags also work with seat belts to improve occupant protection.

The seat belts are designed to protect you in many types of collisions. The front airbags deploy only in moderate to severe frontal collisions. If your vehicle is equipped, the side curtain airbag on the crash side of the vehicle is triggered in moderate to severe side collisions. In certain types of collisions where the airbags deploy, you need the seat belts to keep you in the right position for the airbags to protect you properly.

Here are some simple steps you can take to minimize the risk of harm from a deploying airbag.

1. **Children 12 years old and under should always ride buckled up in a rear seat.**

Infants in rear facing child restraints should **NEVER** ride in the front seat of a vehicle with a passenger front airbag. An airbag deployment can cause severe injury or death to infants in that position.

Children that are not big enough to properly wear the vehicle seat belt (refer to section on Child Restraint) should be secured in the rear seat, in a child restraint or belt-positioning booster seat appropriate for the size and age of the child. Older children who do not use a child restraint or belt-positioning booster seat should ride properly buckled up in the rear seat. Never allow children to slide the shoulder belt behind them or under their arm.

Downloaded from www.Manualslib.com manuals search engine

If a child from 1 to 12 years old must ride in the front passenger seat because the vehicle is crowded, move the seat as far back as possible, and use the proper child restraint. Refer to the section on Child Restraint.

You should read the instructions provided with your child restraint to make sure that you are using it properly.

2. **All occupants should wear their lap and shoulder belts properly.**

3. **The driver and front passenger seats should be moved back as far as practical to allow the front airbags room to inflate.**

4. **If your vehicle has left and right side curtain airbags, do not lean against the door, airbags will inflate forcefully into the space between you and the door.**

WARNING!

- **Relying on the airbags alone could lead to more severe injuries in a collision. The airbags work with your seat belt to restrain you properly. In some collisions the airbags won't deploy at all. Always wear your seat belts even though you have airbags.**
- **Being too close to the steering wheel or instrument panel during front airbag deployment could cause serious injury. Airbags need room to inflate. Sit back, comfortably extending your arms to reach the steering wheel or instrument panel.**
- **If the vehicle has left and right side curtain airbags, they also need room to inflate. Do not lean against the door or window. Sit upright in the center of the seat.**

Downloaded from www.Manualslib.com manuals search engine

"The Front Airbag System" consists of the following:

- Airbag Control Module (with integrated impact sensor)
- AIRBAG Readiness Light
- Driver Airbag
- Front Passenger Airbag
- Seat Belt Pretensioners
- Steering Wheel and Column
- Instrument Panel
- Seat Belt Readiness Light
- Interconnecting Wiring
- Passenger Knee Impact Blocker
- Driver Inflatable Knee Blocker

How The Airbag Systems Work

- The airbag control module determines if an impact is severe enough to require the airbags to inflate. Based on the level of collision severity, the control module determines the proper rate of inflation. The front airbag inflators are designed to provide different rates of airbag inflation. The airbag control module will not detect roll over collisions.

  The airbag control module also monitors the readiness of the electronic parts of the system whenever the ignition switch is in the START or ON positions. These include all of the items listed under "The Front Airbag System", except the passenger knee blocker, instrument panel and the steering wheel and column. If the key is in the OFF position, in the ACC position, or not in the ignition switch, the front airbags are not on and will not inflate.

Downloaded from www.Manualslib.com manuals search engine

The airbag control module sends a message to the instrument cluster to turn on the AIRBAG light in the instrument panel for 6 to 8 seconds when the ignition switch is first turned ON, then turns the light off. If the airbag control module detects a malfunction in any part of the system, the airbag light will turn on either momentarily or continuously.

WARNING!

Ignoring the AIRBAG light in your instrument panel could mean you won't have the airbags to protect you in a collision. If the light does not come on, stays on after you start the vehicle, or if it comes on as you drive, have the airbag system checked right away.

- When the airbag control module detects a collision requiring the **Front Airbags**, it signals the inflator units. A large quantity of nontoxic gas is generated to inflate the front airbags. Different front airbag inflation rates are possible, these rates are determined by the airbag control module based on collision severity. The front airbag covers separate and fold out of the way as the front airbags inflate to their full size. The front airbags fully inflate in about 50 milliseconds. This is only about half of the time it takes you to blink your eyes. The front airbags then quickly deflate while helping to restrain the driver and front passenger. The driver's and passenger's front airbag gas is vented through the airbag material and small vent openings towards the instrument panel. In this way the front airbags do not interfere with your control of the vehicle.
- The **Supplemental Side Curtain Airbags** are designed to activate only in certain side collisions. When the airbag control module detects a collision requiring the side curtain airbags to inflate, it signals the inflators on

Downloaded from www.Manualslib.com manuals search engine

the crash side of the vehicle. A quantity of nontoxic gas is generated to inflate the side curtain airbag. The inflating side curtain airbag pushes the outside edge of the headliner out of the way and inflates (in about the same time it takes to blink your eyes). A properly belted and seated occupant is less likely to be injured by the force of the airbag or crash event. Items that are positioned in the area where the side curtain airbag inflates can reduce the effectiveness of the airbag and also increase the likelihood of injuries to the occupants, this especially applies to children. The side curtain airbag is about 4 inches (10 cm) thick when it is inflated.

- When the airbag control module detects a collision requiring the **Driver Inflatable Knee Blocker**, it signals the inflator unit. A quantity of nontoxic gas is generated to inflate the Driver Inflatable Knee Blocker. The Driver Inflatable Knee Blocker inflates rearward towards the driver's knees to help protect the knees and position you for the best interaction with the front airbag. The Driver Inflatable Knee Blocker fully inflates in about 50 milliseconds, this is only about half of the time it takes you to blink your eyes. It then quickly deflates while helping to protect the driver's knees.
- **The Knee Impact Blockers** help protect the knees and position you for the best interaction with the front airbags.

Side Airbags Supplemental Restraint System (SRS) — If Equipped

"Supplemental Side Curtain Airbag System", on vehicles equipped, consists of the following:

- AIRBAG Readiness Light (shared with the front airbag system)
- Left and Right Side Curtain Airbags Above Side Windows

Downloaded from www.Manualslib.com manuals search engine

- Airbag Control Module
- Interconnecting Wiring

If An Airbag Deployment Occurs

The airbag systems are designed to deploy when the airbag control modules detect a moderate-to-severe collision, to help restrain the driver and front passenger, and then immediately deflate.

NOTE: A collision that is not severe enough to need airbag protection will not activate the system. This does not mean something is wrong with the airbag system.

If you do have a collision which deploys the airbag, any or all of the following may occur:

- The airbag material may sometimes cause abrasions and/or skin reddening to the driver and front passenger as the airbags deploy and unfold. The abrasions are similar to friction rope burns or those you might get sliding along a carpet or gymnasium floor. They are not caused by contact with chemicals. They are not permanent and normally heal quickly. However, if you haven't healed significantly within a few days, or if you have any blistering, see your doctor immediately.
- As the airbags deflate you may see some smoke-like particles. The particles are a normal by-product of the process that generates the nontoxic gas used for airbag inflation. These airborne particles may irritate the skin, eyes, nose, or throat. If you have skin or eye irritation, rinse the area with cool water. For nose or throat irritation, move to fresh air. If the irritation continues, see your doctor. If these particles settle on your clothing, follow the garment manufacturer's instructions for cleaning.
- It is not advisable to drive your vehicle after the airbags have deployed. If you are involved in another collision, the airbags and seat belt pretensioners will not be in place to protect you.

Downloaded from www.Manualslib.com manuals search engine

WARNING!

Deployed airbags and seat belt pretensioners cannot protect you in another collision. Have the airbags and seat belt pretensioners replaced by an authorized dealer as soon as possible.

Enhanced Accident Response

If the airbags and seat belt pertensioners deploy after an impact and the electrical system remains functional, vehicles equipped with power door locks will unlock automatically. In addition, approximately 5 seconds after the vehicle has stopped moving, the interior lights will illuminate until the ignition switch is turned off.

Maintaining Your Airbag System

WARNING!

- **Modifications to any part of the airbag system could cause it to fail when you need it. You could be injured because the airbags are not there to protect you. Do not modify the components or wiring, including adding any kind of badges or stickers to the steering wheel hub trim cover or the upper right side of the instrument panel. Do not modify the front bumper, vehicle body structure, or frame.**
- **You need proper knee impact protection in a collision. Do not mount or locate any aftermarket equipment on or behind the knee blockers.**
- **It is dangerous to try to repair any part of the airbag system yourself. Be sure to tell anyone who works on your vehicle that it has airbags.**

Downloaded from www.Manualslib.com manuals search engine

Airbag Light

You will want to have the airbags ready to inflate for your protection in a collision. While the airbag system is designed to be maintenance free, if any of the following occurs, have an authorized dealer service the system immediately.

- The AIRBAG light does not come on or flickers during the 6 to 8 seconds when the ignition switch is first turned on.
- The light remains on or flickers after the 6 to 8 second interval.
- The light flickers or comes on and remains on while driving.

Child Restraint

Everyone in your vehicle needs to be buckled up at all times — babies and children, too. Every state in the United States and all Canadian provinces require that small children ride in proper restraint systems. This is the law, and you can be prosecuted for ignoring it.

Children 12 years and under should ride properly buckled up in a seat appropriate for their age and size. According to crash statistics, children are safer when properly restrained in the rear seats, rather than in the front.

Downloaded from www.Manualslib.com manuals search engine

WARNING!

In a collision, an unrestrained child, even a tiny baby, can become a missile inside the vehicle. The force required to hold even an infant on your lap could become so great that you could not hold the child, no matter how strong you are. The child and others could be badly injured. Any child riding in your vehicle should be in a proper restraint for the child's size.

Lower Anchors and Tether for CHildren (LATCH)
Each vehicle, is equipped with two child restraint anchorage systems called LATCH, which stands for Lower Anchors and Tether for CHildren. The LATCH child restraint anchorage systems are installed on all second-row seats.

The lower anchor bars of the LATCH System are located where the seat back meets the seat cushion.

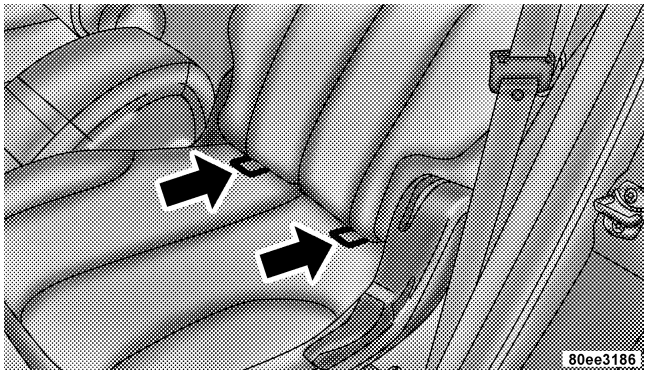

Downloaded from www.Manualslib.com manuals search engine

The tether anchors are located on the rear surface of the seat.

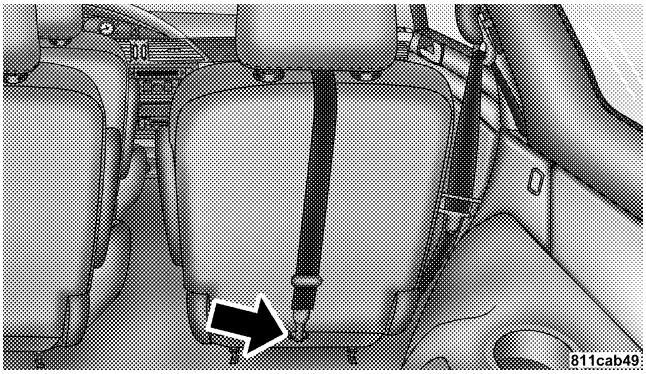

Child restraint systems designed to be compatible with the vehicles LATCH System are now available. LATCH child restraints make installation into the vehicle simple and convenient.

When using the LATCH System, always follow the child restraint manufactures installation instructions.

NOTE: If your child restraint seat is not LATCH compatible, install the restraint using the vehicle seat belts.

Downloaded from www.Manualslib.com manuals search engine

Tether Anchors

There are tether strap anchorages behind all second row seating positions and the driver's side third row seating position. The tether anchors are located in the rear surface of the seat. When using the tether anchorages in the second row seating position, ensure that the strap is routed over the top of the seatback and under the head restraint between the head restraint posts.

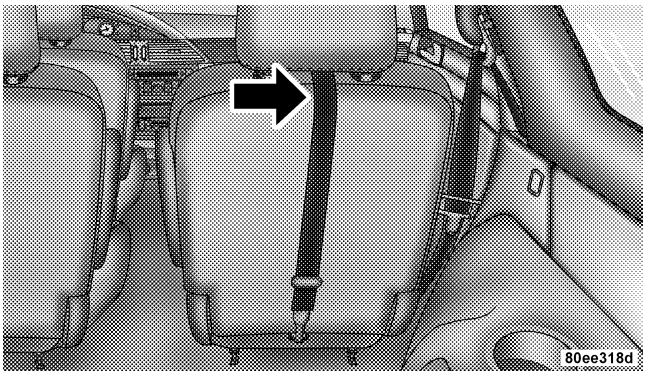

When the tether anchorage is used in the third row seating position, the strap should be positioned straight over the top of the seatback.

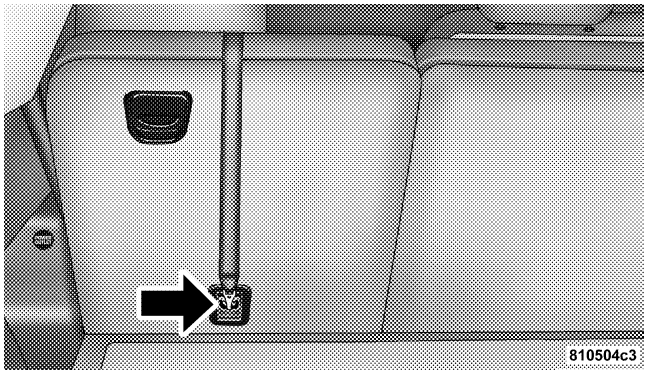

Downloaded from www.Manualslib.com manuals search engine

Infants and Children

There are different sizes and types of restraints for children from newborn size to the child almost large enough for an adult safety belt. Always check the child seat owner's manual to ensure you have the right seat for your child. Use the restraint that is correct for your child:

- Safety experts recommend that children ride rearward-facing in the vehicle until they are at least one year old and weigh at least 9 kg (20 lbs). Two types of child restraints can be used rearward-facing: infant carriers and "convertible" child seats. Both types of child restraints are held in the vehicle by the lap/shoulder belt or the LATCH child restraint anchorage system. Refer to "Lower Anchors and Tether for CHildren (LATCH)" in this section.
- The infant carrier is only used rearward-facing in the vehicle. It is recommended for children who weigh up to about 9 kg (20 lbs). "Convertible" child seats can be used either rearward-facing or forward-facing in the vehicle. Convertible child seats often have a higher weight limit in the rearward-facing direction than infant carriers do, so they can be used rearward-facing by children who weigh more than 9 kg (20 lbs) but are less than one year old.
- Rearward-facing child seats must **NEVER** be used in the front seat of a vehicle with a front passenger airbag. An airbag deployment could cause severe injury or death to infants in this position.
- Children who weigh more than 9 kg (20 lbs) and who are older than one year can ride forward-facing in the vehicle. Forward-facing child seats and convertible child seats used in the forward-facing direction are for children who weigh 9 to 18 kg (20 to 40 lbs) and who are older than one year.

Downloaded from www.Manualslib.com manuals search engine

- The belt-positioning booster seat is for children weighing more than 18 kg (40 lbs), but who are still too small to fit the vehicle's seat belts properly. If the child can not sit with knees bent over the vehicles seat cushion while the child's back is against the seat back, they should use a belt-positioning booster seat. The child and booster seat are held in the vehicle by the lap/shoulder belt. (Some booster seats are equipped with a front shield and are held in the vehicle by the lap portion.)

NOTE: For additional information refer to www.seatcheck.org.

WARNING!

- **Improper installation can lead to failure of an infant or child restraint. It could come loose in a collision. The child could be badly injured or killed. Follow the manufacturer's directions exactly when installing an infant or child restraint.**
- **A rearward facing child restraint should only be used in a rear seat. A rearward facing child restraint in the front seat may be struck by a deploying passenger airbag which may cause severe or fatal injury to the infant.**

Here are some tips on getting the most out of your child restraint:

- Before buying any restraint system, make sure that it has a label certifying that it meets all applicable Safety Standards. We also recommend that you make sure

Downloaded from www.Manualslib.com manuals search engine

that you can install the child restraint in the vehicle where you will use it, before you buy it.

- The restraint must be appropriate for your child's weight and height. Check the label on the restraint for weight and height limits.
- Carefully follow the instructions that come with the restraint. If you install the restraint improperly, it may not work when you need it.

  The passenger seat belts are equipped with cinching latch plates, which are designed to keep the lap portion tight around the child restraint so that it is not necessary to use a locking clip. Pulling up on the shoulder portion of the lap/shoulder belt will tighten the belt. The cinching latch plate will keep the belt tight, however, any seat belt system will loosen with time, so check the belt occasionally and pull it tight if necessary.
- Buckle the child into the seat according to the child restraint manufacturer's directions.
- When your child restraint is not in use, secure it in the vehicle with the seat belt or remove it from the vehicle. Don't leave it loose in the vehicle. In a sudden stop or collision, it could strike the occupants or seatbacks and cause serious personal injury.

Installing A Child Restraint

We urge that you carefully follow the directions of the manufacturer when installing your child restraint. Many, but not all, restraint systems will be equipped with separate straps on each side, with each having a hook or connector and a means for adjusting the tension in the strap. Forward-facing toddler restraints and some rearward-facing infant restraints will also be equipped with a tether strap, a hook and means for adjusting the tension in the strap.

Downloaded from www.Manualslib.com manuals search engine

In general, you will first loosen the adjusters on the lower straps and tether straps so that you can more easily attach the hook or connector to the lower anchorages and tether anchorages. Then tighten all three straps as you push the child restraint rearward and downward into the seat.

Child restraint systems having attachments designed to connect to the lower anchorages are now available. Child restraints having tether straps and hooks for connection to the seatback tether anchorage have been available for some time. In fact, many child restraint manufacturers will provide add-on tether strap kits for some of their older products.

Because the lower anchorages are to be introduced to passenger carrying vehicles over a period of years, child restraint systems having attachments for those anchorages will continue to have features for installation in vehicles using the lap or lap/shoulder belt. They will also have tether straps, and you are urged to take advantage of all of the available attachments provided with your child restraint in any vehicle.

Not all child restraint systems will be installed as we have described here. Again, carefully follow the instructions that come with the child restraint system.

WARNING!

Improper installation of a child restraint to the LATCH anchorages can lead to failure of an infant or child restraint. The child could be badly injured or killed. Follow the manufacturer's directions exactly when installing an infant or child restraint.

Downloaded from www.Manualslib.com manuals search engine

Children Too Large For Booster Seats

Children who are large enough to wear the shoulder belt comfortably, and whose legs are long enough to bend over the front of the seat when their back is against the seatback, should use the lap/shoulder belt in a rear seat.

- Make sure that the child is upright in the seat.
- The lap portion should be low on the hips and as snug as possible.
- Check belt fit periodically. A child's squirming or slouching can move the belt out of position.
- If the shoulder belt contacts the face or neck, move the child closer to the center of the vehicle. Never allow a child to put the shoulder belt under an arm or behind their back.

Transporting Pets

Airbags deploying in the front seat could harm your pet. An unrestrained pet could be thrown about and possibly injured, or injure a passenger during panic braking or in a collision.

Pets should be restrained in the rear seat in pet harnesses or pet carriers that are secured by seat belts.

ENGINE BREAK-IN RECOMMENDATIONS

A long break-in period is not required for the engine in your new vehicle.

Drive moderately during the first 300 miles (500 km). After the initial 60 miles (100 km), speeds up to 50 or 55 mph (80 or 90 km/h) are desirable.

While cruising, brief full-throttle acceleration, within the limits of local traffic laws, contributes to a good break-in. Wide open throttle acceleration in low gear can be detrimental and should be avoided.

Downloaded from www.Manualslib.com manuals search engine

The engine oil installed in the engine at the factory is a high quality energy conserving type lubricant. Oil changes should be consistent with anticipated climate conditions under which vehicle operations will occur. The recommended viscosity and quality grades are shown in Section 7 of this manual. NON-DETERGENT OR STRAIGHT MINERAL OILS MUST NEVER BE USED.

A new engine may consume some oil during its first few thousand miles (kilometers) of operation. This should be considered as a normal part of the break-in and not interpreted as an indication of difficulty.

SAFETY TIPS

Exhaust Gas

WARNING!

Exhaust gases can injure or kill. They contain carbon monoxide (CO) which is colorless and odorless. Breathing it can make you unconscious and can eventually poison you. To avoid breathing (CO) follow the safety tips below.

Do not run the engine in a closed garage or in confined areas any longer than needed to move your vehicle in or out of the area.

If it is necessary to sit in a parked vehicle with the engine running, adjust your heating or cooling controls to force outside air into the vehicle. Set the blower at high speed.

Downloaded from www.Manualslib.com manuals search engine

WARNING!

If you are required to drive with the deck lid/liftgate open, make sure that all windows are closed, and the climate control blower switch is set at high speed. DO NOT use the recirculation mode.

Safety Checks You Should Make Inside The Vehicle

Seat Belts

Inspect the belt system periodically, checking for cuts, frays and loose parts. Damaged parts must be replaced immediately. Do not disassemble or modify the system.

Front seat belt assemblies must be replaced after a collision. Rear seat belt assemblies must be replaced after a collision if they have been damaged (bent retractor, torn webbing, etc. If there is any question regarding belt or retractor condition, replace the belt.

Airbag Light

The light should come on and remain on for 6 to 8 seconds as a bulb check when the ignition switch is first turned ON. If the LED is not lit during starting, have it checked. If the light stays on or comes on while driving, have the system checked by an authorized dealer.

Defroster

Check operation by selecting the defrost mode and place the blower control on high speed. You should be able to feel the air directed against the windshield.

Downloaded from www.Manualslib.com manuals search engine

Periodic Safety Checks You Should Make Outside The Vehicle

Tires

Examine tires for excessive tread wear or uneven wear patterns. Check for stones, nails, glass, or other objects lodged in the tread. Inspect tread and sidewall for cuts or cracks. Check wheel nuts for tightness, and tires (including spare) for proper pressure.

Lights

Have someone observe the operation of exterior lights while you work the controls. Check turn signal and high beam indicator lights on the instrument panel.

Fluid Leaks

Check area under vehicle after overnight parking for fuel, engine coolant, oil or other fluid leaks. Also, if gasoline fumes are detected or fuel, power steering fluid or brake fluid leaks are suspected, the cause should be located and corrected immediately.

Downloaded from www.Manualslib.com manuals search engine

UNDERSTANDING THE FEATURES OF YOUR VEHICLE

CONTENTS

■ Mirrors 67
- □ Inside Day/Night Mirror 67
- □ Automatic Dimming Mirror — If Equipped 67
- □ Driver's Side Outside Mirror Auto Dimmer — If Equipped 68
- □ Exterior Mirrors Folding Feature 68
- □ Outside Mirror — Driver's Side 68
- □ Outside Mirror — Passenger's Side 68
- □ Power Remote-Control Mirrors 69
- □ Heated Remote Control Mirrors 70
- □ Illuminated Vanity Mirrors 70

■ Hands–Free Communication (UConnect™) — If Equipped 71
- □ Operation 72
- □ Phone Call Features 78
- □ UConnect™ System Features 81
- □ Advanced Phone Connectivity 85
- □ Things You Should Know About Your UConnect™ System 87

Downloaded from www.Manualslib.com manuals search engine

■ Seats 93
□ 10–Way Driver's Power Seat — If Equipped . . .93
□ 8–Way Driver's Power Seat — If Equipped 93
□ 4–Way Passenger's Power Seat 93
□ Adjustable Head Restraints 94
□ Heated Seats — If Equipped 94
□ Second Row Manual Seat Recliner 96
□ Second Row Manual Seat Adjuster 97
□ Second Row Fold & Tumble Seats 98
□ Third Row Easy Exit 99
□ Third Row Seating Flexibility 101
□ Load Floor 102
□ Plastic Grocery Bag Retainer 103
■ Driver Memory System — If Equipped 104
■ To Open And Close The Hood 107
■ Lights 108
□ Overhead Console Map/Reading Lights 108
□ Interior Lights 109
□ Multi-Function Lever 109
□ Headlights, Parking Lights, Instrument Panel Lights 110
□ Automatic Headlights 111
□ Daytime Running Lights (Canada Only) 111
□ Lights-On Reminder 111
□ Headlight Time Delay 111
□ Fog Lights — If Equipped 112

Downloaded from www.Manualslib.com manuals search engine

- Turn Signals 112
- Highbeam/Lowbeam Select Switch 113
- Passing Light 113

■ Windshield Wipers And Washers 113
- Windshield Washers 113
- Mist Feature 114
- Windshield Wiper Operation 114
- Intermittent Wiper System 114
- Rear Window Wiper/Washer 114

■ Tilt Steering Column 116

■ Traction Control Switch — If Equipped 116

■ Adjustable Pedals — If Equipped 118

■ Electronic Speed Control 119
- To Activate 119
- To Set At A Desired Speed 120
- To Deactivate 120
- To Resume Speed 120
- To Vary The Speed Setting 120
- To Accelerate For Passing 121

■ Overhead Console — If Equipped 122
- Courtesy/Reading Lights 122
- Sunglasses Storage 122

■ Garage Door Opener — If Equipped 123
- Programming Homelink 124
- Canadian Programming/Gate Programming . . 126
- Using Homelink 127

Downloaded from www.Manualslib.com manuals search engine

- Erasing Homelink Buttons 127
- Reprogramming a Single Homelink Button . . .128
- Security 128

■ Power Sunroof — If Equipped 129
- Express Open Feature 129
- Wind Buffeting 131
- Sunroof Maintenance 131

■ Electrical Power Outlets 131
- Electrical Outlet Use With Engine Off 132

■ Cupholders 133
- Front Seat Cupholders 133
- Second Row Seat Cupholders 133
- Third Row Seat Cupholders 133

■ Storage 133
- Console Features 133
- Rear Cargo Storage Bin 134
- Retractable Cargo Area Cover — If Equipped .134
- Cargo Tie-Down Hooks 135

■ Roof Luggage Rack — If Equipped 137

■ Load Leveling System 138

Downloaded from www.Manualslib.com manuals search engine

MIRRORS

Inside Day/Night Mirror

Adjust the mirror to center on the view through the rear window. A two point pivot system allows for horizontal and vertical adjustment of the mirror.

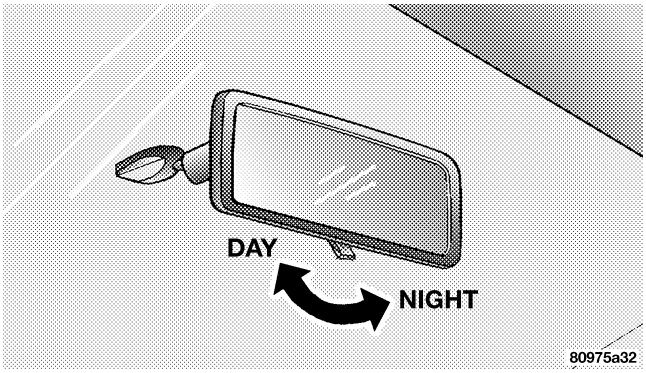

Annoying headlight glare can be reduced by moving the small control under the mirror to the night position (toward rear of vehicle). The mirror should be adjusted while set in the day position (toward windshield).

Automatic Dimming Mirror — If Equipped

If the switch is in the "Auto" position the mirror will automatically adjust for annoying headlight glare from vehicles behind you. You can turn the feature on or off by pressing the button at the base of the mirror. A light in the mirror will illuminate to indicate when this feature is on.

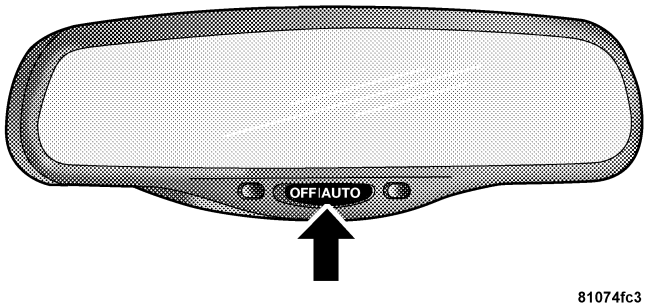

Downloaded from www.Manualslib.com manuals search engine

CAUTION!

To avoid damage to the mirror during cleaning, never spray any cleaning solution directly onto the mirror. Apply the solution onto a clean cloth and wipe the mirror clean.

Driver's Side Outside Mirror Auto Dimmer — If Equipped

This mirror automatically adjusts for annoying headlight glare from vehicles behind you. You can turn this feature on or off by pressing the button at the base of the Rearview Mirror.

Exterior Mirrors Folding Feature

All exterior mirrors are hinged and may be moved either forward or rearward to resist damage. The hinges have three detent positions; full forward, full rearward, and normal.

Outside Mirror — Driver's Side

Adjust the outside mirror to center on the adjacent lane of traffic, with a slight overlap of the view obtained on the inside mirror.

Outside Mirror — Passenger's Side

Adjust the convex outside mirror so you can just see the side of your vehicle in the portion of the mirror closest to the vehicle. This type of mirror will give a much wider view to the rear, and especially of the lane next to your vehicle.

Downloaded from www.Manualslib.com manuals search engine

WARNING!

Vehicles and other objects seen in the right side convex mirror will look smaller and farther away than they really are. Relying too much on your right side mirror could cause you to collide with another vehicle or other object.

Use your inside mirror when judging the size or distance of a vehicle seen in this convex mirror.

Power Remote-Control Mirrors

Use the mirror select switch, located on the driver's door trim panel above the power window switches, to adjust the view obtained in the outside mirrors.

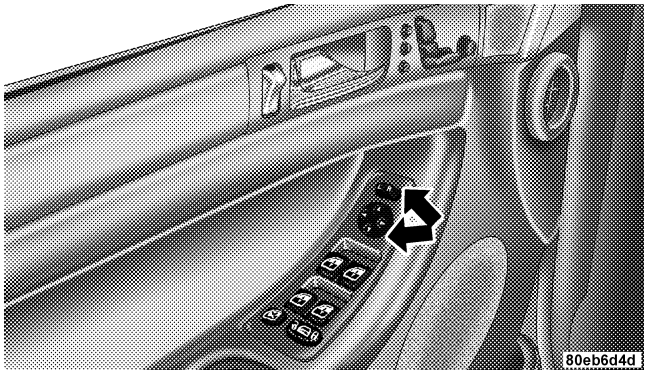

Press the rocker switch to the L or R for Left or Right mirror selection. Use the center off position to guard against accidentally moving a mirror position.

Select a mirror and press one of the four arrows for the direction you want the mirror to move.

Downloaded from www.Manualslib.com manuals search engine

Power mirror preselected positions can be controlled by the optional Memory Seat Feature. Refer to "Memory Seat" in section 3 of this manual.

Heated Remote Control Mirrors

These mirrors are heated to melt frost or ice. This feature is activated whenever you turn on the Rear Window Defrost.

Illuminated Vanity Mirrors

An illuminated vanity mirror is on the sun visor. To use the mirror, rotate the sun visor down and swing the mirror cover upward. The lights turn on automatically. Closing the mirror cover turns off the lights.

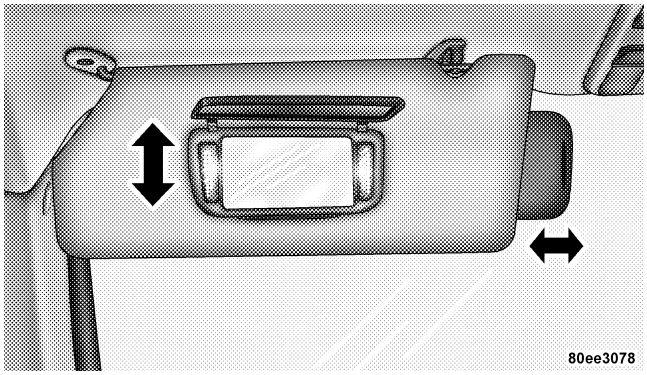

Sun Visor Extension

This feature has a pull out extension on the sun visor for increased coverage.

Downloaded from www.Manualslib.com manuals search engine

HANDS–FREE COMMUNICATION (UConnect™) — IF EQUIPPED

UConnect™ is a voice-activated, hands-free, in vehicle communications system. UConnect™ allows you to dial a phone number with your cellular phone* using simple voice commands (e.g., "Call ... Mike ...Work" or "Dial ... 248-555-1212"). Your cellular phone's audio is transmitted through your vehicle's audio system; the system will automatically mute your radio when using the UConnect™ system.

NOTE: The UConnect™ system use requires a cellular phone equipped with the Bluetooth "Hands-Free Profile," version 0.96 or higher.

For UConnect Customer Support call 1-877-855-8400 or visit the UConnect website (www.chrysler.com/uconnect).

UConnect™ allows you to transfer calls between the system and your cellular phone as you enter or exit your vehicle, and enables you to mute the system's microphone for private conversation.

The UConnect™ phonebook enables you to store up to 32 names and four numbers per name. This system is driven through your Bluetooth™ Hands-Free profile cellular phone. UConnect™ features Bluetooth™ technology - the global standard that enables different electronic devices to connect to each other without wires or a docking station, so UConnect works no matter where you stow your cellular phone (be it your purse, pocket, or briefcase), as long as your phone is turned on and has been paired to the vehicle's UConnect™ system. The UConnect™ system allows up to seven cellular phones to be linked to system. Only one linked (or paired) cellular phone can be used with the system at a time. The system is available in English, Spanish, or French languages (as equipped).

Downloaded from www.Manualslib.com manuals search engine

The rearview mirror contains the microphone for the system and the control buttons that will enable you to access the system. The diagram below shows the mirror with the appropriate buttons. Individual button behavior is discussed in the "Operation" section.

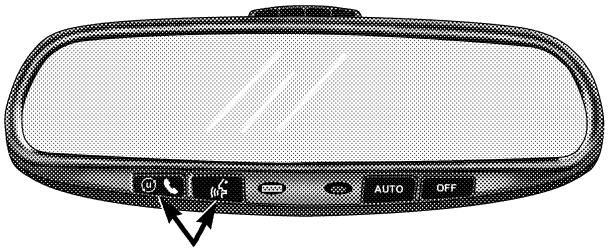

8105b20d

The UConnect™ system can be used with any Hands-Free Profile certified Bluetooth™ cellular phone. If your cellular phone supports a different profile (eg., Headset Profile), you may not be able to use any UConnect™ features. Refer to your cellular service provider or the phone manufacturer for details.

The UConnect™ system is fully integrated with the vehicle's audio system. The volume of the UConnect™ system can either be adjusted from the radio volume control knob, or from the steering wheel radio control (right switch), if so equipped.

The radio display will be used for visual prompts from the UConnect™ system such as "CELL" or caller ID on certain radios.

Operation

Voice commands can be used to operate the UConnect™ system and to navigate through the UConnect™ menu structure. Voice commands are required after most

Downloaded from www.Manualslib.com manuals search engine

UConnect™ system prompts. You will be prompted for a specific command and then guided through the available options.

- Prior to giving a voice command, one must wait for the voice on beep, which follows the "Ready" prompt or another prompt.
- For certain operations, compound commands can be used. For example, instead of saying "Setup" and then "Phone Pairing," the following compound command can be said: "Setup Phone Pairing."
- For each of the feature explanation in this section, only the combined form of the voice command is given. You can also break the commands into parts and say each part of the command, when you are asked for it. For example, you can either use the combined form voice command "Phonebook New Entry," or you can break the combined form command into two voice commands: "Phonebook" and "New Entry." Please remember, the UConnect™ system works best when you talk in a normal conversational tone, as if speaking to some one sitting eight feet away from you.

Help Command

If you need assistance at any prompt or if you want to know what your options are at any prompt, say "Help" following the voice on beep. The UConnect™ system will play all the options at any prompt if you ask for help.

To activate the UConnect™ system from idle, simply press the 'Phone' button and follow audible prompts for directions. All UConnect™ system sessions begin with a press of the 'Phone' button on the mirror.

Cancel Command

At any prompt, after the voice on beep, you can say "Cancel" and you will be returned to the main menu. However, in a few instances the system will take you back to the previous menu.

Downloaded from www.Manualslib.com manuals search engine

Pair (Link) UConnect™ System to a Cellular Phone
To begin using your UConnect™ system, you must pair your compatible Bluetooth™ enabled cellular phone (refer to "Introduction" section to learn about the phone type). To complete the pairing process, you will need to reference your cellular phone owner's manual. One of the following vehicle specific websites may also provide detailed instructions for pairing with the brand of phone that you have:

NOTE: www.chrysler.com/uconnect

The following are general phone to UConnect™ System pairing instructions:

- Press the 'Phone' button to begin.
- After the "Ready" prompt and the following beep, say "Setup Phone Pairing."
- When prompted, after the voice on beep, say "Pair a Phone."
- You will be asked to say a four-digit pin number which you will later need to enter into your cellular. You can enter any four-digit pin number. You will not need to remember this pin number after the initial pairing process.
- The UConnect™ system will then prompt you to begin the cellular phone pairing process on your cellular phone. Before attempting to pair phone, please see your cellular phone's user manual (Bluetooth section) for instructions on how to complete this step.
- For identification purposes, you will be prompted to give the UConnect™ system a name for your cellular phone. Each cellular phone that is paired should be given a unique phone name.
- You will then be asked to give your cellular phone a priority level between 1 and 7, 1 being the highest priority. You can pair up to seven cellular phones to your UConnect™ system. However, at any given time,

Downloaded from www.Manualslib.com manuals search engine

only one cellular phone can be in use, connected to your UConnect™ System. The priority allows the UConnect™ system to know which cellular phone to use if multiple cellular phones are in the vehicle at the same time. For example, if priority 3 and priority 5 phones are present in the vehicle, the UConnect™ system will use the priority 3 cellular phone when you make a call. You can select to use a lower priority cellular phone at any time (refer to "Advanced Phone Connectivity" section).

Dial by Saying a Number

- Press the 'Phone' button to begin.
- After the "Ready" prompt and the following beep, say "Dial."
- System will prompt you to say the number you want call.
- For example, you can say "234-567-8901." The phone number that you enter must be of valid length and combination. The UConnect™ limits the user from dialing invalid combination of numbers. For example, 234-567-890 is nine digits long, which is not a valid phone number - the closest valid phone number has ten digits.
- The UConnect™ system will confirm the phone number and then dial. The number will appear in the display of certain radios.

Call by Saying a Name

- Press the "Phone" button to begin.
- After the "Ready" prompt and the following beep, say "Call."
- System will prompt you to say the name of the person you want call.

Downloaded from www.Manualslib.com manuals search engine

- After the ″Ready″ prompt and the following beep, say the name of the person you want to call. For example, you can say ″John Doe,″ where John Doe is a previously stored name entry in the UConnect™ phonebook. Refer to section ″Add Names to Your UConnect™ Phonebook,″ to learn how to store a name in the phonebook.
- The UConnect™ system will confirm the name and then dial the corresponding phone number, which may appear in the display of certain radios.

Add Names to Your UConnect™ Phonebook

NOTE: Adding names to phonebook is recommended when vehicle is not in motion.

- Press the "Phone" button to begin.
- After the ″Ready″ prompt and the following beep, say ″Phonebook New Entry.″
- When prompted, say the name of the new entry. Use of long names helps the voice recognition and is recommended. For example, say ″Robert Smith″ or ″Robert″ instead of ″Bob.″
- When prompted, enter the number designation (e.g.: ″Home,″ ″Work,″ ″Mobile,″ or ″Pager″). This will allow you to store multiple numbers for each phonebook entry, if desired.
- When prompted, recite the phone number for the phonebook entry that you are adding.

After you are finished adding an entry into the phonebook, you will be given the opportunity to add more phone numbers to the current entry or to return to the main menu.

The UConnect™ system will allow you to enter up to 32 names in the phonebook with each name having up to four associated phone numbers and designations.

Downloaded from www.Manualslib.com manuals search engine

Edit Entries in the UConnect™ Phonebook

NOTE: Adding names to phonebook is recommended when vehicle is not in motion.

- Press the 'Phone' button to begin.
- After the "Ready" prompt and the following beep, say "Phonebook Edit."
- You will then be asked for the name of the phonebook entry that you wish to edit.
- Next, choose the number designation (home, work, mobile, or pager) that you wish to edit.
- When prompted, recite the new phone number for the phonebook entry that you are editing.

After you are finished editing an entry in the phonebook, you will be given the opportunities to edit another entry in the phonebook, call the number you just edited, or return to the main menu.

"Phonebook Edit" can be used to add another phone number to a name entry that already exists in the phonebook. For example, the entry John Doe may have a mobile and a home number, but you can add John Doe's work number later using the "Phonebook Edit" feature.

Delete Entries in the UConnect™ Phonebook

- Press the 'Phone' button to begin.
- After the "Ready" prompt and the following beep, say "Phonebook Delete."
- After you enter the Phonebook Delete menu, you will then be asked for the name of the entry that you wish to delete. You can either say the name of a phonebook entry that you wish to delete or you can say "List Names" to hear a list of the entries in the phonebook from which you choose. To select one of the entries from the list, press the "Voice Recognition" button while the UConnect™ system is playing the desired entry and say "Delete."

Downloaded from www.Manualslib.com manuals search engine

- After you enter the name, the UConnect™ system will ask you which designation you wish to delete: home, work, mobile or pager. Say the designation you wish to delete.

Delete All Entries in the UConnect™ Phonebook

- Press the 'Phone' button to begin.
- After the "Ready" prompt and the following beep, say "Phonebook Erase All."
- The UConnect™ system will ask you to verify that you wish to delete all the entries from the phonebook.
- After confirmation, the phonebook entries will be deleted.

List All Names in the UConnect™ Phonebook

- Press the 'Phone' button to begin.
- After the "Ready" prompt and the following beep, say "Phonebook List Names."
- The UConnect™ system will play the names of all the phonebook entries.
- To call one of the names in the list, press the "Voice Recognition' button during the playing of the desired name and say "Call". NOTE: the user can also exercise "Edit" or "Delete" operations at this point.
- The UConnect™ system will then prompt you as to number designation you wish to call.
- The selected number will be dialed.

Phone Call Features

The following features can be accessed through the UConnect™ system if the feature(s) are available on your cellular service plan. For example, if your cellular service plan provides three-way calling, this feature can be

Downloaded from www.Manualslib.com manuals search engine

accessed through the UConnect™ system. Check with your cellular service provider for the features that you have.

Answer or Reject an Incoming Call - No Call Currently in Progress

When you receive a call on your cellular phone, the UConnect™ system will interrupt the vehicle audio system, if on, and will ask if you would like to answer the call. To reject the call, press and hold the 'Phone' button until you hear a single beep indicating that the incoming call was rejected.

Answer or Reject an Incoming Call - Call Currently in Progress

If a call is currently in progress and you have another incoming call, you will hear the same network tones for call waiting that you normally hear when using your cell phone. Press the 'Phone' button to place the current call on hold and answer the incoming call. NOTE: The UConnect™ system compatible phones in market today do not support rejecting an incoming call when another call is in progress. Therefore, the user can only either answer an incoming call or ignore it.

Making a Second Call while Current Call in Progress

To make a second call while you are currently in a call, press the 'Voice Recognition' button and say "Dial" or "Call" followed by the phone number or phonebook entry you wish to call. The first call will be on hold while the second call is in progress. To go back to the first call, refer to section "Toggling Between Two Calls." To combine two calls, refer to section "Conference Call."

Place / Retrieve a Call from Hold

To put a call on hold, press the 'Phone' button until you hear a single beep which will indicate that the call has been placed on hold. To bring the call back from hold, press and hold the 'Phone' button for 1 to 3 seconds.

Downloaded from www.Manualslib.com manuals search engine

Toggling Between Calls
If two calls are in progress (one active and one on hold), press the 'Phone' button until you hear a single beep indicating that the active and hold status of the two calls have switched. Only one call can be placed on hold at one time.

Conference Call
When two calls are in progress (one active and one on hold), press and hold the 'Phone' button until you hear a double beep indicating that the two calls have been joined into one conference call.

Three-Way Calling
To initiate three-way calling, press the 'Voice Recognition' button while a call is in progress and make a second phone call as described in section "Making a Second Call while Current Call in Progress." After the second call has established, press and hold the 'Phone' button until you hear a double beep indicating that the two calls have been joined into one conference call.

Call Termination
To end a call in progress, momentarily press the 'Phone' button. All active calls will be terminated.

Redial

- Press the 'Phone' button to begin.
- After the "Ready" prompt and the following beep, say "Redial."
- The UConnect™ system will call the last number that was dialed on your cellular phone. Note: this may not be the last number dialed from the UConnect™ system.

Downloaded from www.Manualslib.com manuals search engine

Call Continuation

Call continuation is progression of a phone call on UConnect™ system after the vehicle ignition key has been switched to off. Call continuation functionality can be of three types:

- After ignition key is switched off, a call can continue on the UConnect™ system either until the call ends or until the vehicle battery condition dictates cessation of the call on the UConnect™ system and transfer of the call to the mobile phone.
- After ignition key is switched to off, a call can continue on the UConnect™ system for certain duration, after which the call is automatically transferred from the UConnect™ system to the mobile phone.
- An active call is automatically transferred to the mobile phone after ignition key is switched to off. Vehicles, such as Pacifica, support this approach.

UConnect™ System Features

Language Selection

To change the language that the UConnect™ system is using,

- Press the 'Phone' button to begin.
- After the "Ready" prompt and the following beep, say the name of the language you wish to switch to (English, Espanol, or Francais, if so equipped).
- Continue to follow the system prompts to complete language selection.

After selecting one of the languages, all prompts and voice commands will be in that language.

NOTE: After every UConnect™ language change operation, you need to re-enter names to the phonebook and re-pair (re-link) phone(s).

Downloaded from www.Manualslib.com manuals search engine

Emergency Assistance
If you are in an emergency and the mobile phone is reachable:

- Pick up the phone and manually dial the emergency number for your area.

If the phone is not reachable and the UConnect™ system is operational, you may reach the emergency number as follows:

- Press the 'Phone' button to begin.
- After the "Ready" prompt and the following beep, say "Emergency" and the UConnect™ system will instruct the paired cellular phone to call the emergency number. This feature is only supported in the USA.

NOTE: The UConnect™ system does slightly lower your chances of successfully making a phone call as to that for the cell phone directly.

Your phone must be turned on and paired to the UConnect™ system to allow use of this vehicle feature in emergency situations when the cell phone has network coverage and stays paired to the UConnect™ system.

Towing Assistance
If you need towing assistance,

- Press the 'Phone' button to begin.
- After the "Ready" prompt and the following beep, say "Towing Assistance."

Please refer to the 24-Hour Towing Assistance coverage details in the DaimlerChrysler Corporation 24-Hour Towing Assistance Program Guide.

Paging
To learn how to page, refer to section "Working with Automated Systems." Paging works properly except for pagers of certain companies which timeout a little too soon to work properly with the UConnect™ system.

Downloaded from www.Manualslib.com manuals search engine

Voice Mail Calling
To learn how to access your voice mail, refer to section "Working with Automated Systems."

Working with Automated Systems
This method is designed to be used in instances where one generally has to press numbers on the cellular phone keypad while navigating through an automated telephony system.

You can use your UConnect™ system to access a voicemail system or an automated service, such as, paging service or automated customer service. Some services require immediate response selection, in some instances, that may be too quick for use of UConnect™ system.

When calling a number with your UConnect™ system that normally requires you to enter in a touch-tone sequence on your cellular phone keypad, you can push the 'Voice Recognition' button and say the sequence you wish to enter followed by the word "Send." For example, if required to enter your pin number followed with a pound 3 7 4 6 #, you can press the 'Voice Recognition' button and say "3 7 4 6 # Send." Saying a number, or sequence of numbers, followed by "Send" is also to be used to navigate through an automated customer service center menu structure and to leave a number on a pager.

Barge In - Overriding Prompts
The 'Voice Recognition' button can be used when you wish to skip part of a prompt and issue your voice recognition command immediately. For example, if a prompt is playing "Would you like to pair a phone, clear a...," you could press the 'Voice Recognition' button and say "Pair a Phone" to select that option without having to listen to the rest of the voice prompt.

Turning Confirmation Prompts On/Off
Turning confirmation prompts off will stop the system from confirming your choices (e.g. the UConnect™ system will not repeat a phone number before you dial it).

Downloaded from www.Manualslib.com manuals search engine

- Press the 'Phone' button to begin.
- After the "Ready" prompt and the following beep, say "Setup Confirmations." The UConnect™ system will play the current confirmation prompt status and you will be given the choice to change it.

Phone and Network Status Indicators
The UConnect™ system will provide notification to inform you if your cellular phone is in roaming status, has low signal strength, or has a low battery when you are trying to place a phone call.

Dialing Using the Cellular Phone Keypad
You can dial a phone number with your cellular phone keypad and still use the UConnect™ system (while dialing via the cell phone keypad, the user must exercise caution and take precautionary safety measures). By dialing a number with your paired Bluetooth™ cellular phone, the audio will be played through your vehicle's audio system. The UConnect™ system will work the same as if you dial the number using voice recognition.

NOTE: Certain brands of mobile phones do not send the dial ring to the UConnect™ system to play it on the vehicle audio system, so you will not hear it. Under this situation, after successfully dialing a number, the user may feel that the call did not go through even though the call is in progress. Once your call is answered, you will hear the audio.

Mute/Un-mute (Mute off)
When you mute the UConnect™ system, you will still be able to hear the conversation coming from the other party, but the other party will not be able to hear you. In order to mute the UConnect™ system:

- Press the 'Voice Recognition' button.
- After the "Ready" prompt and the following beep, say "Mute."

Downloaded from www.Manualslib.com manuals search engine

In order to un-mute the UConnect™ system:

- Press the 'Voice Recognition' button.
- After the "Ready" prompt and the following beep, say "Mute-off."

Information Service
When using AT&T Wireless Service, dialing to phone number "#121," you can access voice activated automated system to receive news, weather, stocks, traffic, etc. related information.

Advanced Phone Connectivity

Transfer Call to and from Cellular Phone
The UConnect™ system allows on going calls to be transferred to your cellular phone to the UConnect™ system without terminating the call. To transfer an ongoing call from your UConnect™ paired cellular phone to the UConnect™ system or vice-versa, press the 'Voice Recognition' button and say "Transfer Call."

Connect or Disconnect Link Between the UConnect™ System and Cellular Phone
Your cellular phone can be paired with many different electronic devices, but can only be actively "connected" with one electronic device at a time.

If you would like to connect or disconnect the Bluetooth™ connection between a UConnect™ paired cellular phone and the UConnect™ system, follow the instruction described in your cellular phone user's manual.

List Paired Cellular Phone Names

- Press the 'Phone' button to begin.
- After the "Ready" prompt and the following beep, say "Setup List Phones".
- When prompted, say "List Phones".

Downloaded from www.Manualslib.com manuals search engine

- The UConnect™ system will play the phone names of all paired cellular phones in order from the highest to the lowest priority.

Select another Cellular Phone

This feature allows you to select and start using another phone with the UConnect™ system. The phone must have been previously paired to the UConnect™ system that you want to use it with.

- Press the 'Phone' button to begin.
- After the "Ready" prompt and the following beep, say "Setup Select Phone."
- When prompted, say the phone name of the cellular phone you wish to use, or say "List Phones" to hear a list of all the phones that have been paired to your UConnect™ system. To select a phone from the list, press the 'Voice Recognition' button and say "Select."
- A lower priority phone will only be used for the next phone call. After that, the UConnect™ system will return to using the highest priority phone present in or near (approximately with in 30 feet) the vehicle.

Delete UConnect™ Paired Cellular Phones

- Press the 'Phone' button to begin.
- After the "Ready" prompt and the following beep, say "Setup Phone Pairing."
- At the next prompt, say "Delete."
- You will be asked to say the name of the phone that you wish to delete. You can either say the name of the phone that you wish to delete or you can say "All" to delete all the phones.

Downloaded from www.Manualslib.com manuals search engine

Things You Should Know About Your UConnect™ System

Voice Recognition (VR)

- Always wait for the beep before speaking.
- Speak normally, without pausing, just as you would speak to a person sitting approximately eight (8) feet away from you.
- Make sure that no one other than you is speaking during a voice recognition period.
- Performance is maximized under:
  - low-to-medium blower setting,
  - low-to-medium vehicle speed,
  - low road noise,
  - smooth road surface,
  - fully closed windows,
  - dry weather condition.
- Even though the system is designed for users speaking in North American English and Spanish accents, the system may not always work for some.
- When navigating through an automated system, such as, voice mail, or when sending a page, at the end of speaking the digit string, make sure to say "send."
- Storing names in phonebook when vehicle is not in motion is recommended.
- It is not recommended to store similar sounding names in the UConnect™ phonebook.
- UConnect™ phonebook name tag recognition rate is optimized for the person who stored the name in the phonebook.

Downloaded from www.Manualslib.com manuals search engine

- You can say ″O″ (letter ″O″) for ″0″ (zero). ″800″ must be spoken ″eight-zero-zero.″
- Even though international dialing for most number combinations is supported, some shortcut dialing number combinations may not be supported.

Far End Audio Performance:

- Audio quality is maximized under:
  - low-to-medium blower setting,
  - low-to-medium vehicle speed,
  - low road noise,
  - smooth road surface,
  - fully closed windows, and
  - dry weather condition.
  - Operation from driver seat.
- Performance, such as, audio clarity, echo. and loudness to a large degree, rely on the phone and network, and not the UConnect™ system.
- Echo at far end can sometime be reduced by lowering the in-vehicle audio volume.

Bluetooth Communication Link

Cellular phones have been found to occasionally loose connection to the UConnect™ system. When this happens, the connection can generally be re-established by switching the phone off/on. Your cell phone is recommended to remain in Bluetooth ″on″ mode.

Downloaded from www.Manualslib.com manuals search engine

Reset
In rare instances, it may be necessary to reset the UConnect™ system. The reset feature is exercised by pressing and holding the 'UConnect™ ' and 'Voice Recognition' buttons simultaneously for 15 seconds. Normally, you do not need to exercise this feature.

Power-Up
After switching ignition key from off to either On or ACC position, or after a reset, you must wait at least five (5) seconds prior to using the system.

Downloaded from www.Manualslib.com manuals search engine

Voice Tree

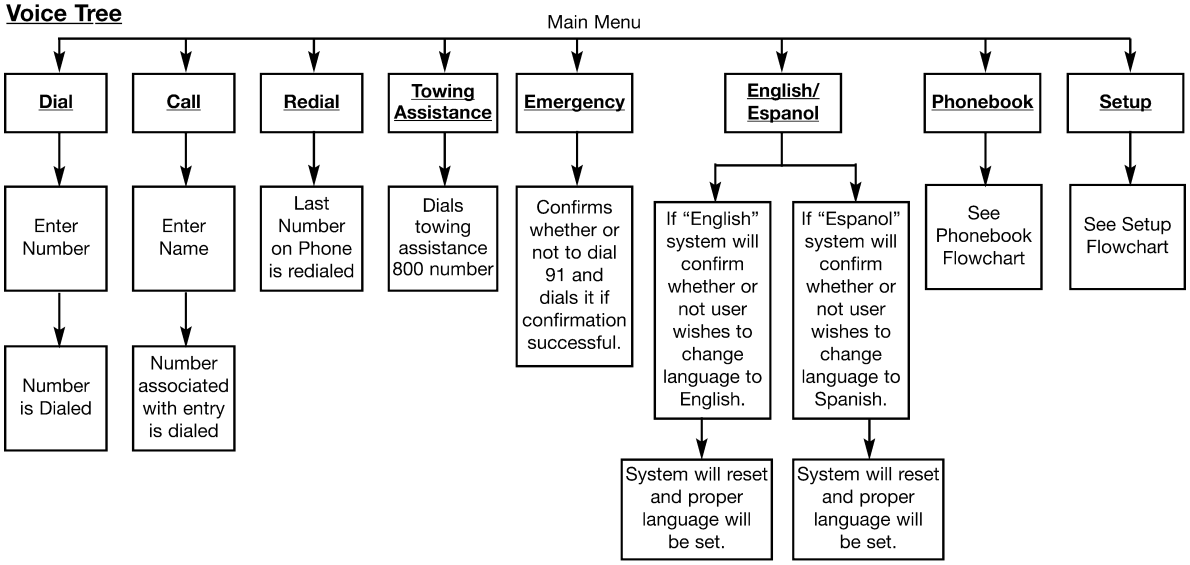

Note: **Available Voice commands are shown in bold face and are underlined.**

8131b290

Downloaded from www.Manualslib.com manuals search engine

Voice Tree – Phonebook

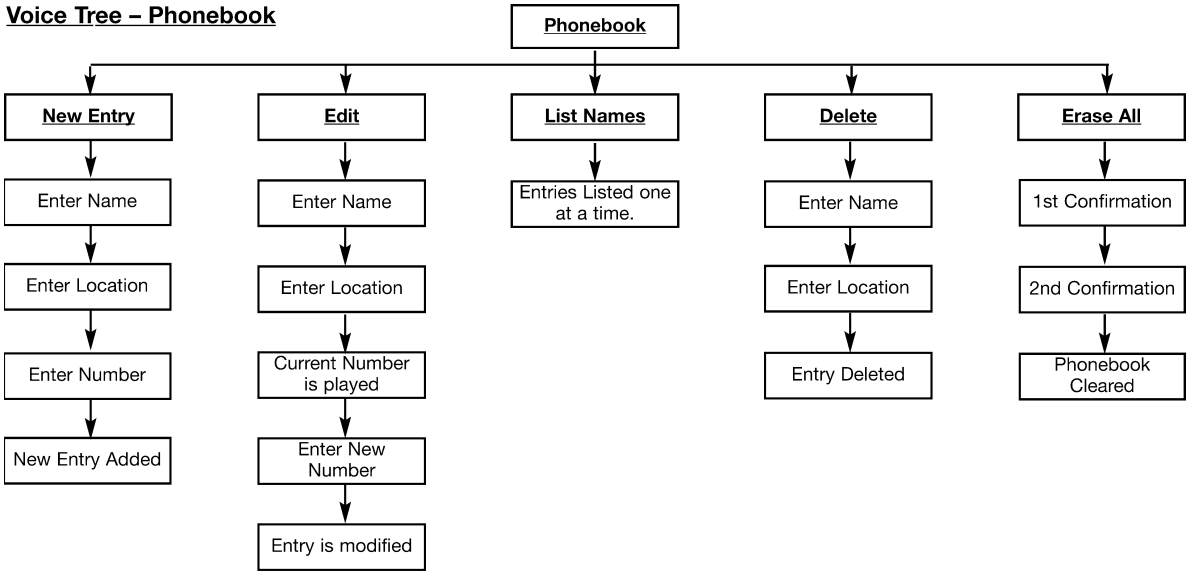

Note: Available Voice commands are shown in bold face and are underlined.

8131b294

Downloaded from www.Manualslib.com manuals search engine

Voice Tree – Setup

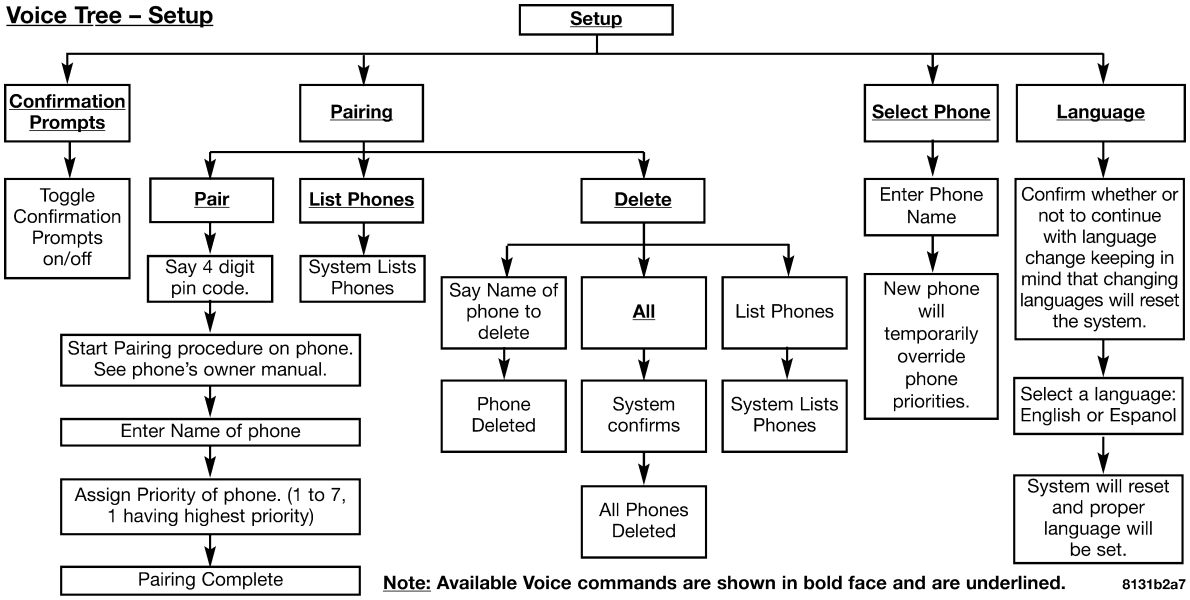

Note: **Available Voice commands are shown in bold face and are underlined.** 8131b2a7

Downloaded from www.Manualslib.com manuals search engine

SEATS

10–Way Driver's Power Seat — If Equipped

The driver's power seat switches are located on the driver's front door trim panel. The bottom switch controls up/down, forward/rearward, and tilt adjustment. The top switch controls the seatback recline adjustment and the middle switch controls the lumbar adjustment.

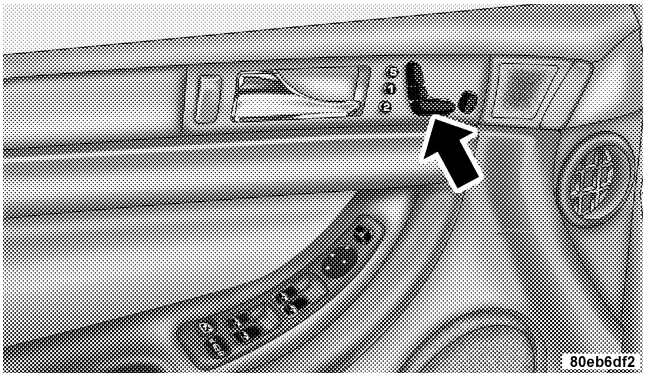

WARNING!

Adjust the seat only while the vehicle is parked. Adjusting a seat while the vehicle is moving is dangerous. The sudden movement of the seat could cause you to lose control. The seat belt might not be properly adjusted and you could be injured.

8–Way Driver's Power Seat — If Equipped

The driver's power seat switches are located on the driver's front door trim panel. The bottom switch controls up/down, forward/rearward, and tilt adjustment. The top switch controls the seatback recline adjustment.

4–Way Passenger's Power Seat

The front passenger's power seat switches are located on the passenger's front door trim panel. The bottom switch controls forward and rearward adjustment. The top switch controls the seatback recline adjustment.

Downloaded from www.Manualslib.com manuals search engine

CAUTION!

Do not place any article under a power seat or impede its ability to move as it may cause damage to the seat controls. Seat travel may become limited if movement is stopped by an obstruction in the seat's path.

Adjustable Head Restraints

Head restraints can reduce the risk of whiplash injury in the event of impact from the rear. Pull up or push down on the head restraint so that the upper edge is as high as practical. To raise the head restraint, pull up on the head restraint. To lower the head restraint, depress the release tab located at the base of the head restraint and push down on the head restraint.

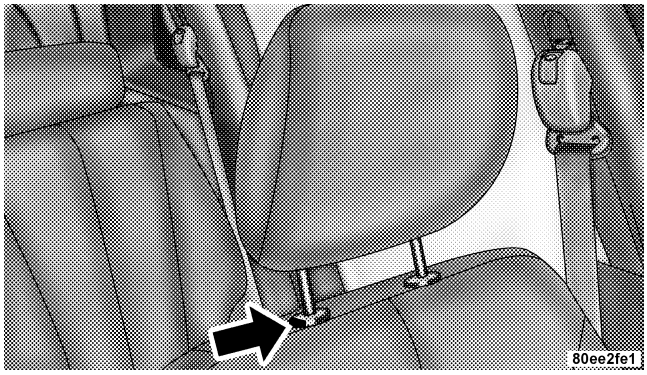

Heated Seats — If Equipped

This feature heats the driver, front passenger and second row seats. The controls for the front heated seats are located on the door trim panel next to the power seat switches.

Downloaded from www.Manualslib.com manuals search engine

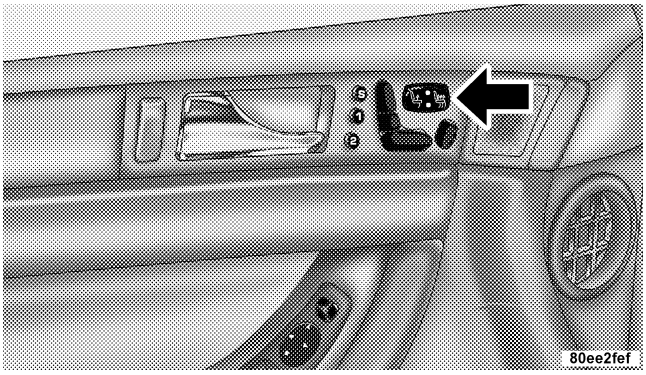

Press the switch once to select a heat setting (high or low) and press the switch a second time in the same direction to turn the heated seat off. The indicator light will show when LOW or HIGH heat is ON.

The controls for the second row heated seats are located on the center console between the seats. Press the switch once to select a heat setting (high or low) and press the switch a second time in the same direction to turn the heated seat off. The indicator light will show when LOW or HIGH heat is ON.

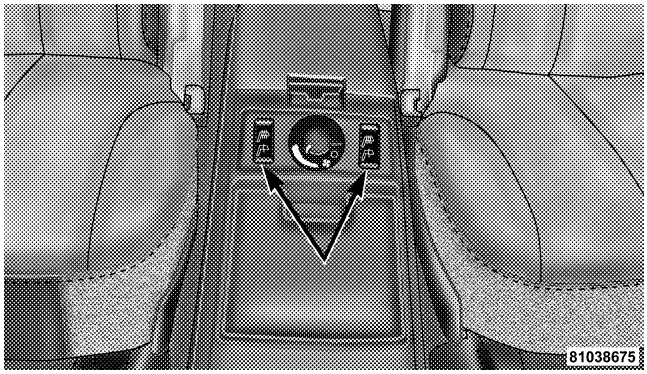

NOTE:

- If the lights in the second row heated seat switch begin to flash when the switch is pressed, it indicates that the

3

Downloaded from www.Manualslib.com manuals search engine

heated seat is not functioning properly and that service is required. See your authorized dealer for service.

- Once a heat setting is selected, heat will be felt within 2 to 3 minutes.
- The heated seats will turn off when the ignition switch is turned to the OFF position.

Second Row Manual Seat Recliner

The recliner mechanism control is on the outboard side of the seat. To recline, lean forward slightly, lift the lever, then push back to the desired position and release the lever. Lean forward and lift the lever to return the seatback to its normal position. Using body pressure, lean forward and rearward on the seat to be sure the seatback has latched.

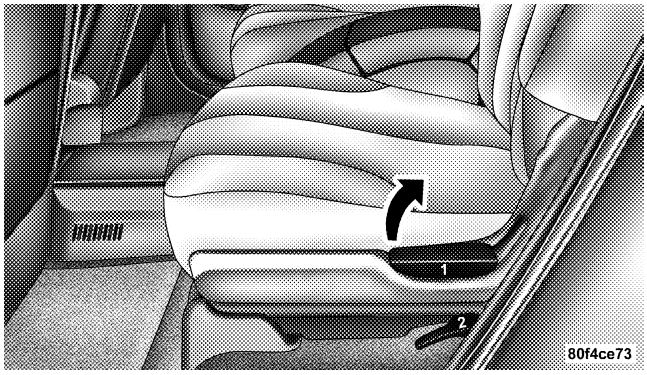

NOTE: When using the recliner mechanism with the 3rd row seat folded down, the second row seat may need to be adjusted forward to achieve full recline.

Downloaded from www.Manualslib.com manuals search engine

WARNING!

Do not ride with the seatback reclined so that the shoulder belt is no longer resting against your chest. In a collision you could slide under the seat belt and be seriously or fatally injured. Use the recliner only when the vehicle is parked.

Second Row Manual Seat Adjuster

The adjusting bar is located under the front of the seat. Pull the bar up and move the seat to the desired position. Release the bar to lock the seat into position.

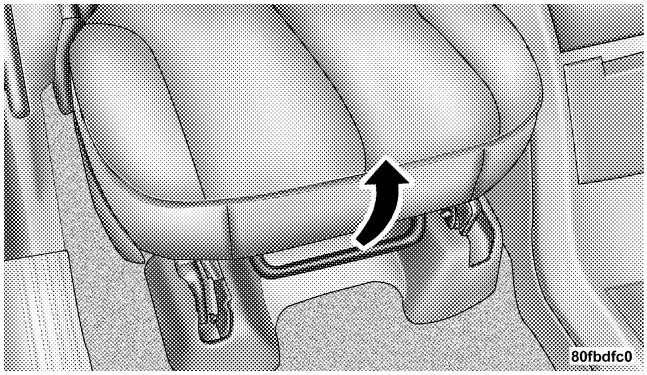

Using body pressure, move forward and rearward on the seat to be sure the seat adjusters have latched.

Downloaded from www.Manualslib.com manuals search engine

WARNING!

Adjust the seat only while the vehicle is parked. Adjusting a seat while the vehicle is moving is dangerous. The seat belt might not be properly adjusted and you could be injured.

Second Row Fold & Tumble Seats

The second row seats can be folded and tumbled forward for easy access to the third seat or rear cargo area.

To fold and tumble the seat, follow these steps:

1. Remove any obstructions from the floor in front of the seat.

2. Lower the head restraint to its full downward position and rotate the arm rest to the upright position.

3. Move the seat to the full rear position.

4. Pull up on the seatback release lever located on the outboard side of the seat labeled "1" and fold the seatback down.

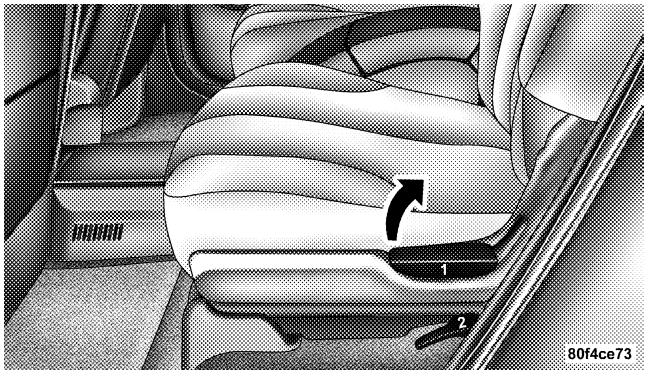

To assure the seatback is latched in the folded position, additional downward pressure on the seatback may be required when folding.

Downloaded from www.Manualslib.com manuals search engine

5. Pull up on the release handle labeled “2” and lift firmly to tumble the seat fully forward. If the seat contacts the rear of the front seat, move the front seat forward.

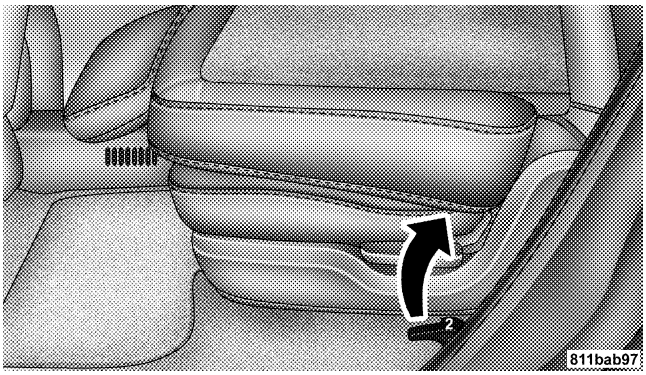

To relatch the seat, tilt the seat rearward and push down firmly to engage the rear attachments. Then lift the seatback release lever labeled “1” and pull the seatback up to return it to its full upright position.

WARNING!

In a collision, you or others in your vehicle could be injured if seats are not properly latched to their floor attachments. Always be sure the seats are fully latched.

Third Row Easy Exit

For passengers sitting in the third row seats, the second row seats can be folded and tumbled forward for easy exit.

To fold and tumble the seat forward, follow these steps:

Downloaded from www.Manualslib.com manuals search engine

1. Pull up on the seatback release handle “1” located on the back of the seat to fold the seatback down.

2. Pull the release strap “2” located at the bottom of the seat to lift and tumble the seat forward.

To relatch the seat, tilt the seat rearward and push down firmly to engage the rear attachments. Then lift the seatback release lever labeled “1” and pull the seatback up to return it to its full upright position.

Downloaded from www.Manualslib.com manuals search engine

Third Row Seating Flexibility

The third row seats may be used with either or both seatbacks folded forward for additional storage space.

To fold the seat, remove any objects from in front of or on the seat. Then pull handle located on the seatback and push it forward.

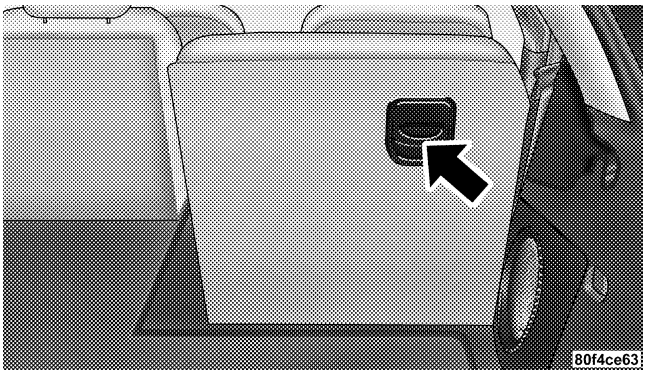

WARNING!

Do not sit in the 3rd row seat with the second row seatbacks folded or with the second row seats folded and tumbled. In a collision, you could slide under the seat belt and be seriously or even fatally injured.

To raise the 3rd row seat, lift up on the seatback and push rearward until the seatback is latched. Move the seatback forward to be sure the seatback is fully latched.

CAUTION!

Be sure there is nothing in front of the 3rd row seat cushion before folding it down. Damage to the seat may occur.

Downloaded from www.Manualslib.com manuals search engine

WARNING!

- **Not all head restraints in this vehicle are the same. Head restraints from one seating position should not be removed and installed in any other seating position. In a collision, serious injury or death may result if the proper head restraint is not installed on each seat.**
- **The cargo area in the rear of the vehicle should not be used as a play area by children. They could be seriously injured in a collision. Children should be seated and using the proper restraint system.**
- **It is extremely dangerous to ride in a cargo area, inside or outside of a vehicle. In a collision, people riding in these areas are more likely to be seriously injured or killed.**
- **Do not allow people to ride in any area of your vehicle that is not equipped with seats and seat belts.**
- **Be sure everyone in your vehicle is in a seat and using a seat belt properly.**

Load Floor

For additional cargo space, the second and third row seatbacks may be folded forward and the load floor extended to cover the center console.

To extend the load floor, follow these steps:

1. Move the second row seats to the full rear position.

2. Fold the second and third row seatbacks down.

3. Pull on the load floor strap and lift the panel from the driver's second row seatback over the center console and onto the passenger second row seat.

Downloaded from www.Manualslib.com manuals search engine

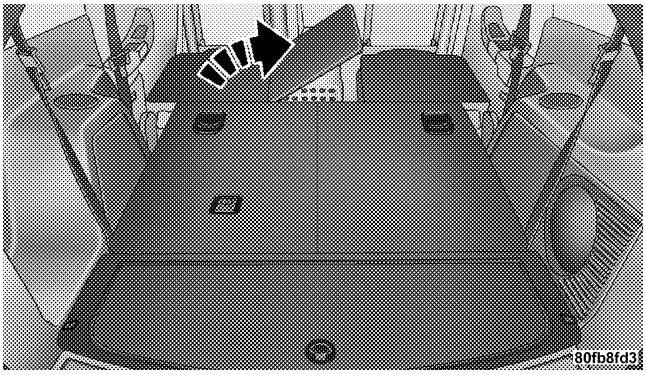

NOTE: Be sure to reattach the strap to secure the load floor panel when not in use.

Plastic Grocery Bag Retainer

Retainer hooks which will hold plastic grocery bag handles are built into the seatbacks of all front seats. The floor supports the partial weight of the bagged goods.

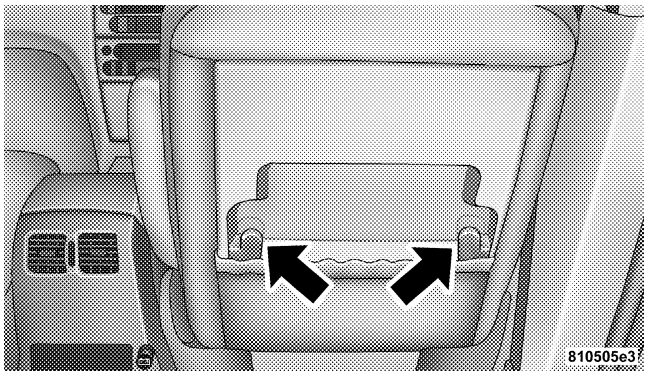

Downloaded from www.Manualslib.com manuals search engine

DRIVER MEMORY SYSTEM — IF EQUIPPED

If your vehicle is equipped with memory systems, your remote keyless entry transmitter or memory seat buttons on the driver's door panel can be used to recall the driver's seat, outside mirrors, adjustable pedals (if equipped) and radio station presets to saved positions.

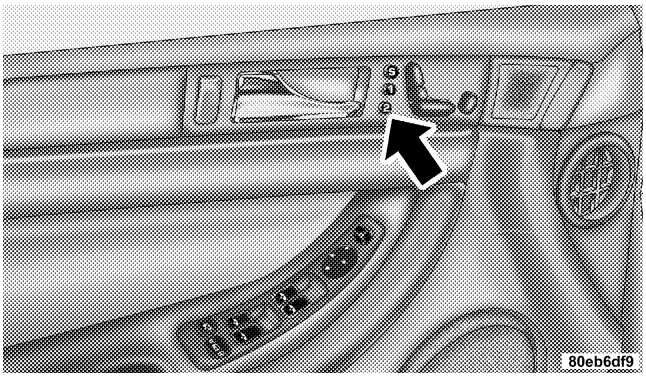

The memory seat buttons located on the driver's door will always recall stored settings. The remote keyless entry transmitter can be programmed to recall positions when the UNLOCK button is pressed. Refer to the following procedure on how to link a remote keyless entry transmitter to a position.

NOTE: The vehicle must be in Park to recall memory positions. If a recall is attempted when the vehicle is not in Park, a message will be displayed in the Electronic Vehicle Information Center (EVIC).

To recall memory positions press memory button number 1 if you are recalling the memory position for driver one or press memory button number 2 if you are recalling the memory position for driver two. A recall can be cancelled by pressing any of the memory buttons during a recall. When a recall is cancelled, the seat stops moving and a delay of approximately one second will occur before any other recalls can be selected.

Downloaded from www.Manualslib.com manuals search engine

Your vehicle has been delivered with two remote keyless entry transmitters. One or both transmitters can be linked to either memory position. Up to eight remote keyless entry transmitters can be used with your vehicle. The memory seat system can also accommodate up to eight transmitters linked to either of the two stored seat positions or any combination of the two positions.

To Program Memory Seat Buttons & RKE Transmitters, Follow These Steps:

1. Turn the ignition switch to the ON position.

2. Select Remote Linked to Memory from the EVIC and enter "Yes".

3. Use the seat, mirror and adjustable pedal switches to adjust the seat, recliner, side view mirrors and adjustable pedals to the desired positions.

4. Set the radio station presets (up to 10 AM and 10 FM stations can be set).

5. Turn the ignition switch to the OFF position and remove the key.

6. Press and release the SET (S) button located on the driver's door. A light in the button will flash telling you that you are in the set memory mode. You have five seconds to complete the next step.

7. Within 5 seconds, press and release button 1 or 2 on the driver's door. A chime will sound signaling you that the driver memory has been set. A message will also be displayed in the Electronic Vehicle Information Center (EVIC), indicating a position has been set.

8. Within 5 seconds, press and release the LOCK button on one of the Remote Keyless Entry Transmitters. A chime will sound signaling you that the transmitter has been successfully linked. A message will also be displayed in the Electronic Vehicle Information Center (EVIC), indicating the transmitter has been linked.

Downloaded from www.Manualslib.com manuals search engine

Repeat the above steps for the second position using the other driver's door numbered button and Remote Keyless Entry Transmitter.

Each time the SET (S) button and a numbered button are pressed, you erase the old memory and store a new one.

To Disable A Transmitter Link, Follow These Steps:

1. Select "Remote Linked To Memory" from the Electronic Vehicle Information Center, Customer Programmable features.

2. Turn the ignition switch to the OFF position and remove the key.

3. Press and release the SET (S) button located on the driver's door. A light in the button will flash telling you that you are in the set memory mode. You have five seconds to complete the next step.

4. Within 5 seconds, press and release button 1 or 2 on the driver's door. A chime will sound signaling you that the driver memory has been set. A message will also be displayed in the Electronic Vehicle Information Center (EVIC), indicating a position has been set.

5. Within 5 seconds, press and release the UNLOCK button on the remote keyless entry transmitters. A chime will sound signaling you that the transmitter link has been successfully disabled. A message will also be displayed in the Electronic Vehicle Information Center (EVIC), indicating the transmitter has been disabled.

To disable another transmitter from memory positions 1 or 2, repeat steps 1– 4 for each transmitter.

NOTE: This function can be selected using the "Customer Programmable Features" in the Electronic Vehicle Information Center (EVIC) section, Otherwise see your authorized dealer.

Downloaded from www.Manualslib.com manuals search engine

TO OPEN AND CLOSE THE HOOD

To open the hood, two latches must be released. First pull the hood release lever located under the left side of the instrument panel.

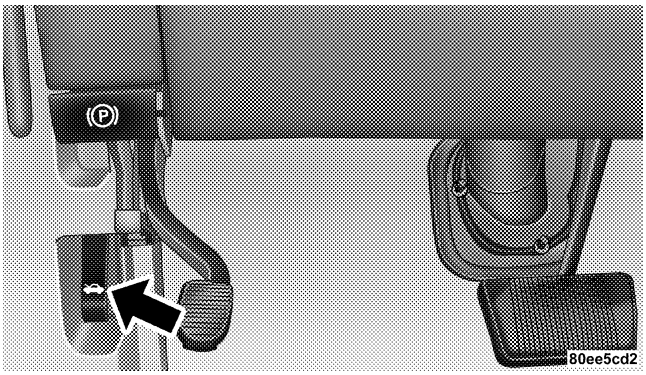

Next, push to the left the safety catch located under the front edge of the hood, near the center.

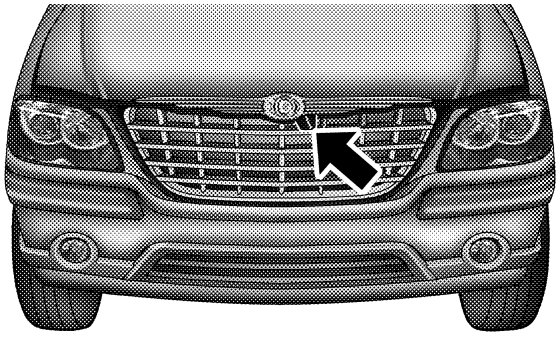

Use the hood prop rod to secure the hood in the open position.

To prevent possible damage, do not slam the hood to close it. Lower the hood until it is open approximately 15 cm (6 inches) and then drop it. This should secure both latches. Never drive your vehicle unless the hood is fully closed, with both latches engaged.

Downloaded from www.Manualslib.com manuals search engine

WARNING!

If the hood is not fully latched, it could fly up when the vehicle is moving and block your forward vision. You could have a collision. Be sure all hood latches are fully latched before driving.

LIGHTS

Overhead Console Map/Reading Lights

These lights are mounted between the sun visors on the overhead console. Each light is turned ON by pressing the lens. Press the lens a second time to turn the light OFF. The lights also turn on when a door is opened or the dimmer control is turned fully upward, past the second detent.

80ee5d20

NOTE: The lights will remain on until the switch is pressed a second time, so be sure they have been turned off before leaving the vehicle.

Downloaded from www.Manualslib.com manuals search engine

Interior Lights

The interior lights come on when a door is opened.

The interior lights will automatically turn off in about 15 minutes if a door is left open or the dimmer control is left in the Dome light position. Turn the ignition switch ON to restore the interior light operation.

Multi-Function Lever

The Multi-Function Lever controls the operation of the headlights, parking lights, turn signals, headlight beam selection, instrument panel light dimming, interior lights, the passing lights, and fog lights. The lever is located on the left side of the steering column.

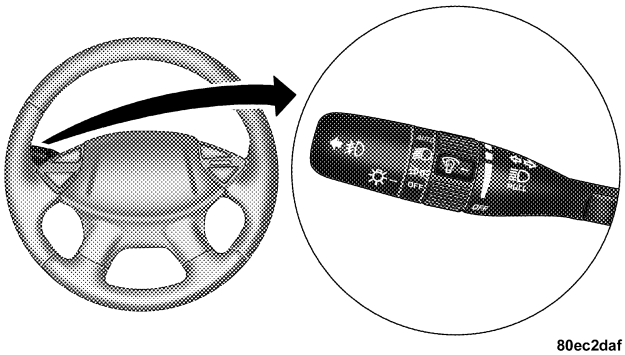

Downloaded from www.Manualslib.com manuals search engine

Headlights, Parking Lights, Instrument Panel Lights

Turn the end of the Multi-Function Lever to the first detent for parking light and instrument panel light operation. Turn to the second detent for headlight, park light and instrument panel light operation.

To change the brightness of the instrument panel lights, rotate the center portion of the Multi-Function Lever up or down.

Dimmer Control

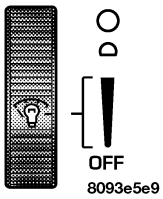

With the parking lights or headlights on, rotating the dimmer control for the interior lights on the Multi-Function Lever upward will increase the brightness of the instrument panel lights.

Dome Light Position

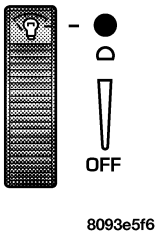

Rotate the dimmer control completely upward to the second detent to turn on the interior lights. The interior lights will remain on when the dimmer control is in this position.

Interior light Defeat (OFF)

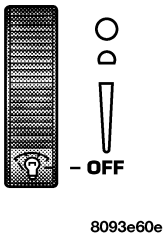

Rotate the dimmer control to the extreme bottom "OFF" position. The interior lights will remain off when the doors are open.

Downloaded from www.Manualslib.com manuals search engine

Parade Mode (Daytime Brightness Feature)

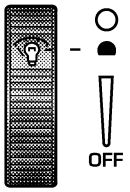

8093e650

Rotate the dimmer control upward to the first detent. This feature brightens the odometer and radio display when the parking lights or headlights are on during daylight conditions.

Automatic Headlights

This system automatically turns your headlights ON or OFF based on ambient light levels. To turn the system ON, turn the end of the Multi-Function Lever to the third detent position. When the system is ON, the Headlight Time Delay feature is also ON. This means your headlights will stay ON for up to 90 seconds after you turn the ignition switch OFF. To turn the Automatic System OFF, turn the end of the Multi-Function Lever to the OFF position.

NOTE: The engine must be running before the headlights will come ON in the Automatic mode.

Daytime Running Lights (Canada Only)

The high beam headlights will come on as Daytime Running Lights whenever the ignition switch is on, the headlights are off, and the parking brake is off. The headlight switch must be used for normal night time driving.

Lights-on Reminder

If the headlights or parking lights are on after the ignition is turned OFF, a chime will sound to alert the driver when the driver's door is opened.

Headlight Time Delay

This feature provides the safety of headlight illumination for up to 90 seconds, when leaving your vehicle in an unlighted area.

Downloaded from www.Manualslib.com manuals search engine

To activate the delay feature, turn off the ignition switch while the headlights are still on. Then turn off the headlights within 45 seconds. The 90 second delay interval begins when headlight switch is turned off. If the headlights or park lights are turned back on or the ignition switch is turned on, the delay will be cancelled.

If the headlights are turned off before the ignition, they will turn off in the normal manner.

NOTE: The lights must be turned off within 45 seconds of turning the ignition off to activate this feature

Fog Lights — If Equipped

The front fog light switch is on the Multi-Function Lever. To activate the front fog lights, turn on the parking lights or the low beam headlights and pull out the end of the Multi-Function Lever.

NOTE: The fog lights will only operate with the headlights on low beam. Selecting high beam headlights will turn off the fog lights.

Turn Signals

Move the Multi-Function Lever up or down and the arrows on each side of the instrument cluster flash to show proper operation of the front and rear turn signal lights. You can signal a lane change by moving the lever partially up or down without moving beyond the detent.

If either light has a very fast flash rate, check for a defective outside light bulb. If an indicator fails to light when the lever is moved, it would suggest that the fuse or indicator bulb is defective.

Downloaded from www.Manualslib.com manuals search engine

Highbeam/Lowbeam Select Switch

Pull the Multi-Function Lever towards you to switch the headlights to HIGH beam. Pull the Lever a second time to switch the headlights to LOW beam.

Passing Light

You can signal another vehicle with your headlights by lightly pulling the Multi-Function Lever toward you. This will cause the headlights to turn on at high beam and remain on until the lever is released.

WINDSHIELD WIPERS AND WASHERS

The wipers and washers are operated by a switch on the control lever. The lever is located on the right side of the steering column. Rotate the end of the control lever to select the desired wiper speed.

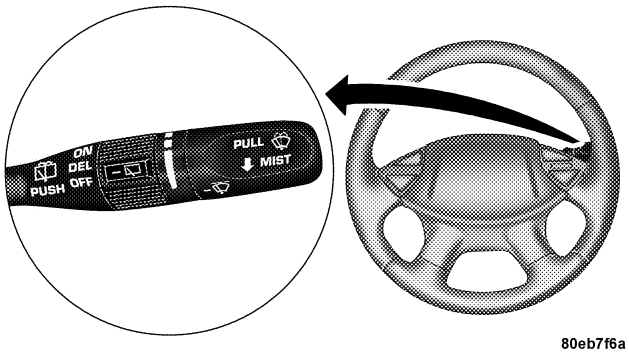

80eb7f6a

Windshield Washers

To use the front washer, pull the lever toward you and hold while spray is desired. If the lever is pulled while in the delay range, the wiper will operate for two wipe cycles after the lever is released, and then resume the intermittent interval previously selected.

3

Downloaded from www.Manualslib.com manuals search engine

If the lever is pulled while in the OFF position, the wipers will operate for two wipe cycles, then turn OFF.

Mist Feature

Push down on the wiper lever to activate a single wipe to clear off road mist or spray from a passing vehicle. As long as the lever is held down, the wipers will continue to operate.

Windshield Wiper Operation

Rotate the end of the lever to the second detent for Low speed wiper operation, or to the third detent for High speed operation

Intermittent Wiper System

Use the intermittent wiper when weather conditions make a single wiping cycle, with a variable pause between cycles, desirable. Rotate the end of the lever to the first detent position, then turn the end of the lever to select the desired delay interval. The delay can be regulated from a maximum of approximately 23 seconds between cycles, to a cycle every second.

Rear Window Wiper/Washer

The switch on the right side of the steering column also controls operation of the rear wiper/washer function.

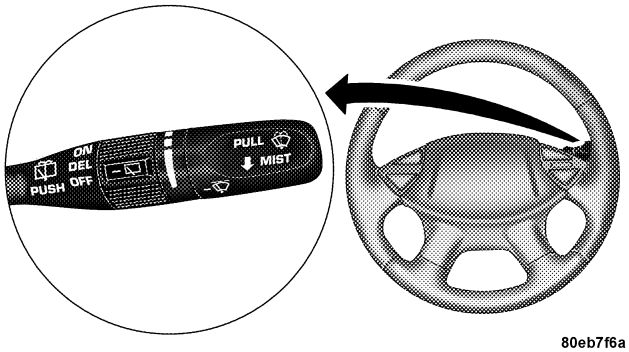

80eb7f6a

Downloaded from www.Manualslib.com manuals search engine

Rotating the center of the switch up to the DEL (Delay) position or the ON position will activate the rear wiper. Push the lever forward to initiate the rear wash function in any of the three positions. The washer pump will continue to operate as long as the lever is pressed. Upon release, the rear wiper will cycle two times before returning to the set position.

Adding Washer Fluid

The fluid reservoir for the windshield washers and the rear window washer is shared. It is located in the front of the engine compartment on the driver's side and should be checked for fluid level at regular intervals. Fill the reservoir with windshield washer solvent (not radiator antifreeze) and operate the system for a few seconds to flush out the residual water.

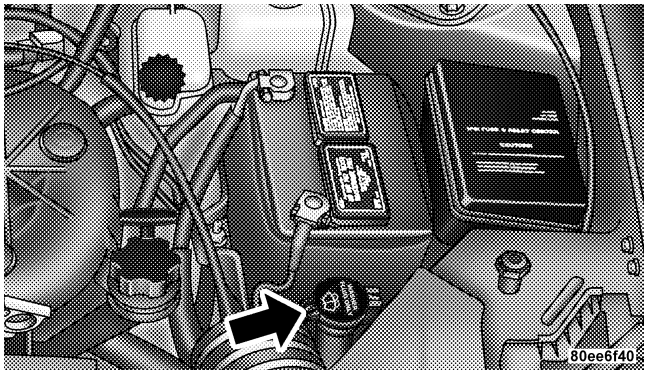

The washer fluid reservoir will hold a full gallon of fluid when Low Washer Fluid illuminates in the Electronic Vehicle Information Center (EVIC).

Downloaded from www.Manualslib.com manuals search engine

TILT STEERING COLUMN

To tilt the column, pull the lever, located behind the turn signal control, toward you and move the steering wheel up or down, as desired. Release the lever to lock the steering wheel firmly in place.

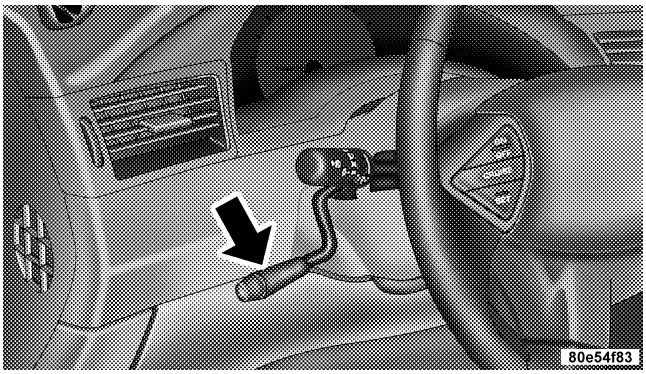

WARNING!

Tilting the steering column while the vehicle is moving is dangerous. Without a stable steering column, you could lose control of the vehicle and have an accident. Adjust the column only while the vehicle is stopped. Be sure it is locked before driving.

TRACTION CONTROL SWITCH — IF EQUIPPED

The traction control Indicator, located in the instrument cluster, will light up when the Traction Control is in use.

To turn the system OFF, press the Traction Control switch located on center console next to the ash tray, until the traction control Indicator in the instrument cluster lights up.

Downloaded from www.Manualslib.com manuals search engine

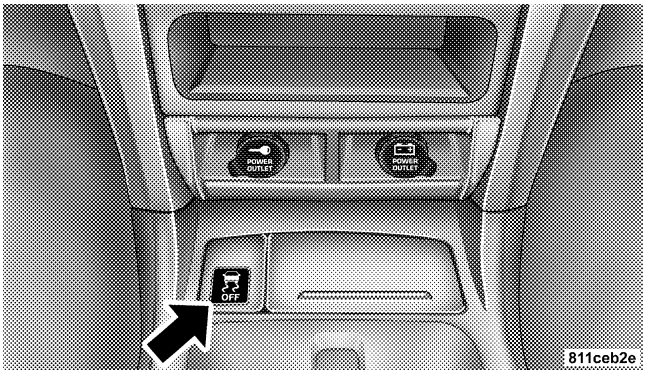

To turn the system back ON, press the switch a second time until the traction control Indicator turns OFF.

NOTE:

- The traction control Indicator comes on each time the ignition switch is turned ON. This will occur even if you used the switch to turn the system OFF.
- The Traction Control system will make buzzing or clicking sounds when in operation.

Downloaded from www.Manualslib.com manuals search engine

ADJUSTABLE PEDALS — IF EQUIPPED

This feature allows both the brake and accelerator pedals to move toward or away from the driver to provide improved position with the steering wheel. The adjustable pedal system is designed to allow a greater range of driver comfort for steering wheel tilt and seat position. The switch is located on the drivers door trim panel next to the power seat switches.

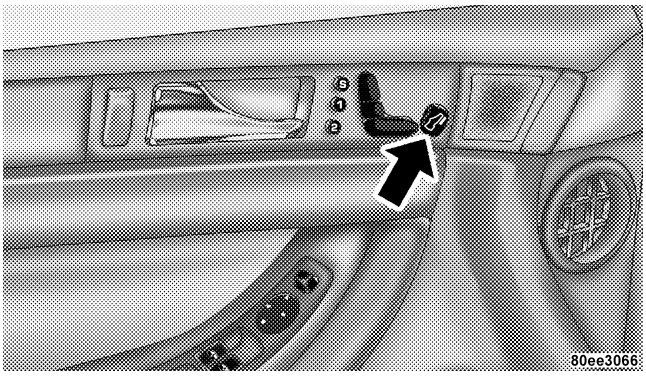

Press the switch forward to move the pedals forward (toward the front of the vehicle).

Press the switch rearward to move the pedals rearward (toward the driver).

- The pedals can be adjusted with the ignition OFF.
- The pedals can be adjusted while driving.
- The pedals **cannot** be adjusted when the vehicle is in R (Reverse) or when the Speed Control is ON. A message will be displayed in the Electronic Vehicle Information Center (EVIC) if the pedals are attempted to be adjusted when the system is locked out ("Adjustable Pedal Disabled — Cruise Control Engaged" or "Adjustable Pedal Disabled — Vehicle In Reverse").

NOTE: If your vehicle is equipped with memory seat feature, your remote keyless entry transmitter or memory seat buttons on the driver's door panel can be used to recall the adjustable pedals to saved positions.

Downloaded from www.Manualslib.com manuals search engine

CAUTION!

Do not place any article under the adjustable pedals or impede its ability to move as it may cause damage to the pedal controls. Pedal travel may become limited if movement is stopped by an obstruction in the adjustable pedal's path.

ELECTRONIC SPEED CONTROL

When engaged, this device takes over the accelerator operation at speeds greater than 30 mph (50 km/h). The speed control switches are located on the steering wheel.

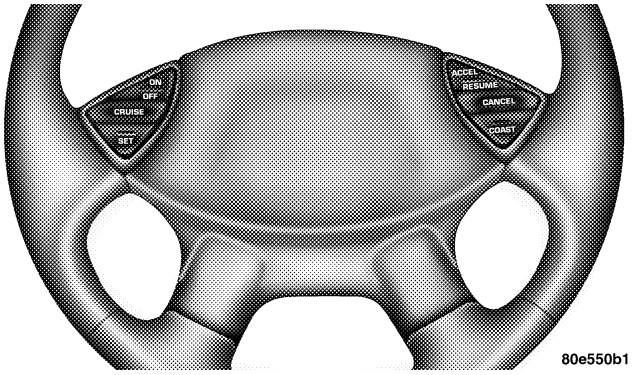

To Activate:

Push the "ON/OFF" button once and the CRUISE indicator located near the instrument cluster odometer will illuminate showing the electronic speed control system is on. To turn the system OFF, push the "ON/OFF" button again and the system and indicator will turn off.

3

Downloaded from www.Manualslib.com manuals search engine

WARNING!

Leaving the Electronic Speed Control system on when not in use is dangerous. You could accidently set the system or cause it to go faster than you want. You could lose control and have an accident. Always leave the system OFF when you aren't using it.

To Set At A Desired Speed:

When the vehicle has reached the desired speed, press and release the "SET" button. Release the accelerator and the vehicle will operate at the selected speed. The CRUISE SET indicator located near the instrument cluster odometer will illuminate showing the electronic speed control is set.

NOTE: While in the AutoStick mode, Speed Control will only function in third or fourth gear.

To Deactivate:

A soft tap on the brake pedal, pushing the "CANCEL" button or normal braking while slowing the vehicle will deactivate the speed control without erasing the memory. Pushing the "ON/OFF" button to the OFF position or turning off the ignition erases the speed memory.

To Resume Speed:

To resume a previously set speed, push and release the "ACCEL/RESUME" button. Resume can be used at any speed above 25 mph (40 km/h).

To Vary the Speed Setting:

When the speed control is set, speed can be increased by pressing and holding the "ACCEL/RESUME" button. When the button is released, a new set speed will be established.

Tapping the "ACCEL/RESUME" button once will result in a 2 mph (3 km/h) speed increase. Each time the button

Downloaded from www.Manualslib.com manuals search engine

is tapped, speed increases so that tapping the button three times will increase speed by 6 mph (10 km/h), etc.

To decrease speed while speed control is set, press and hold the "COAST" button. Release the button when the desired speed is reached, and the new speed will be set.

Tapping the "COAST" button once will result in a 1 mph (2 km/h) speed decrease. Each time the button is tapped, speed decreases.

To Accelerate For Passing:

Depress the accelerator as you would normally. When the pedal is released, the vehicle will return to the set speed.

NOTE: The speed control system maintains speed up and down hills. A slight speed change on moderate hills is normal.

Four speed automatic transmissions will experience a downshift to 3rd gear while climbing uphill or descending downhill. This downshift to 3rd gear is necessary to maintain vehicle set speed.

On steep hills a greater speed loss or gain may occur so it may be preferable to drive without speed control.

WARNING!

Speed Control can be dangerous where the system can't maintain a constant speed. Your vehicle could go too fast for the conditions, and you could lose control. An accident could be the result. Don't use Speed Control in heavy traffic or on roads that are winding, icy, snow-covered, or slippery.

Downloaded from www.Manualslib.com manuals search engine

OVERHEAD CONSOLE — IF EQUIPPED

The overhead console can contain courtesy/reading lights, an optional universal garage door opener (HomeLink®), storage for sunglasses, optional power sunroof switches and an optional power liftgate switch.

80ee5d20

Courtesy/Reading Lights

At the forward end of the console are two courtesy/reading lights.

Press the lens to turn these lights on. Press a second time to turn the lights off.

The lights also turn on when a front door, a rear door or the liftgate is opened. The lights will also turn on when the unlock button on the remote keyless entry transmitter is pressed.

Sunglasses Storage

At the rear of the overhead console, a compartment is provided for the storage of a pair of sunglasses.

Press the door latch to open the compartment. The door will slowly rotate to an open position.

Downloaded from www.Manualslib.com manuals search engine

GARAGE DOOR OPENER — IF EQUIPPED

The HomeLink® Universal Transceiver replaces up to three remote controls (hand held transmitters) that operate devices such as garage door openers, motorized gates, or home lighting. It triggers these devices at the push of a button. The Universal Transceiver operates off your vehicle's battery and charging system; no batteries are needed.

For additional information on HomeLink®, call 1–800–355–3515, or on the internet at www.homelink.com.

WARNING!

A moving garage door can cause injury to people and pets in the path of the door. People or pets could be seriously or fatally injured. Only use this transceiver with a garage door opener that has a "stop and reverse" feature as required by federal safety standards. This includes most garage door opener models manufactured after 1982. Do not use a garage door opener without these safety features it could cause injury or death. Call toll-free 1–800–355–3515 or, on the Internet at www.homelink.com for safety information or assistance.

Downloaded from www.Manualslib.com manuals search engine

Programming HomeLink

NOTE: When programming a garage door opener, it is advised to park outside the garage. Some vehicles may require the ignition switch to be turned to the second (or "accessories") position for programming and/or operation of HomeLink. It is also recommended that a new battery be placed in the hand-held transmitter of the device being programmed to HomeLink for quicker training and accurate transmission of the radio-frequency signal.

1. Press and hold the two outer HomeLink buttons, and release only when the indicator light begins to flash (after 20 seconds). **Do not** hold the buttons for longer than 30 seconds and **do not** repeat step one to program a second and/or third hand-held transmitter to the remaining two HomeLink buttons.

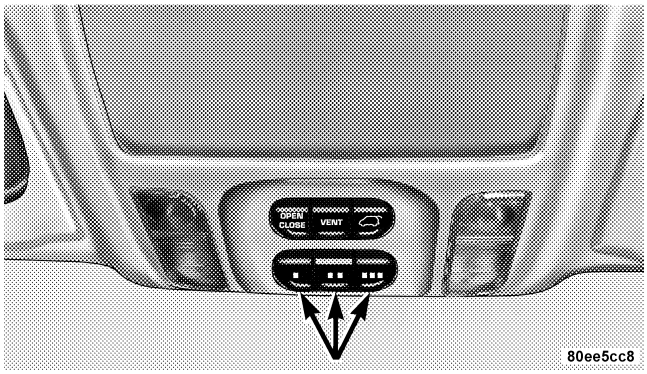

WARNING!

Vehicle exhaust contains carbon monoxide, a dangerous gas. Do not run the vehicle's exhaust while training the transceiver. Exhaust gas can cause serious injury or death.

Downloaded from www.Manualslib.com manuals search engine

WARNING!

Your motorized door or gate will open and close while you are training the Universal Transceiver. Do not train the transceiver if people or pets are in the path of the door or gate. A moving door or gate can cause serious injury or death to people and pets or damage to objects.

2. Position the end of your hand-held transmitter 1-3 inches (3-8 cm) away from the HomeLink buttons while keeping the indicator light in view.

3. Simultaneously press and hold both the HomeLink button that you want to train and the hand-held transmitter buttons. **Do not release the buttons until step 4 has been completed.**

NOTE: Some gate operators and garage door openers may require you to replace this Programming Step 3 with procedures noted in the "Gate Operator/Canadian Programming" section.

4. The HomeLink indicator light will flash slowly and then rapidly after HomeLink successfully receives the frequency signal from the hand-held transmitter. Release both buttons after the indicator light changes from the slow to the rapid flash.

5. Press and hold the just trained HomeLink button and observe the indicator light. If the indicator light **stays on constantly, programming is complete** and your device should activate when the HomeLink button is pressed and released.

NOTE: To program the remaining two HomeLink buttons, begin with "Programming" **step two. Do not repeat step one.**

Downloaded from www.Manualslib.com manuals search engine

If the indicator light blinks **rapidly for two seconds and then turns to a constant light continue with "Programming" steps 6-8** to complete the programming of a rolling code equipped device (most commonly a garage door opener).

6. At the garage door opener receiver (motor-head unit) in the garage, locate the "learn" or "smart" button. This can usually be found where the hanging antenna wire is attached to the motor-head unit.

7. Firmly press and release the "learn" or "smart" button. (The name and color of the button may vary by manufacturer.)

NOTE: There are 30 seconds in which to initiate step eight.

8. Return to the vehicle and firmly **press, hold for two seconds and release** the programmed HomeLink button. Repeat the **"press/hold/release"** sequence a second time, and, depending on the brand of the garage door opener (or other rolling code equipped device), repeat this sequence a third time to complete the programming.

HomeLink should now activate your rolling code equipped device.

NOTE: To program the remaining two HomeLink buttons, begin with "Programming" **step two. Do not repeat step one**. For questions or comments, please contact HomeLink at **www.homelink.com or 1-800-355-3515**.

Canadian Programming/Gate Programming

Canadian radio-frequency laws require transmitter signals to "time-out" (or quit) after several seconds of transmission which may not be long enough for HomeLink to pick up the signal during programming. Similar to this Canadian law, some U.S. gate operators are designed to "time-out" in the same manner.

Downloaded from www.Manualslib.com manuals search engine

If you live in Canada or you are having difficulties programming a gate operator by using the ″Programming″ procedures (regardless of where you live), **replace ″Programming HomeLink″ step 3** with the following:

NOTE: If programming a garage door opener or gate operator, it is advised to unplug the device during the ″cycling″ process to prevent possible overheating.

3. Continue to press and hold the HomeLink button while you **press and release every two seconds** (″cycle″) your hand-held transmitter until the frequency signal has successfully been accepted by HomeLink. (The indicator light will flash slowly and then rapidly.) Proceed with ″Programming″ step four to complete.

Using HomeLink

To operate, simply press and release the programmed HomeLink button. Activation will now occur for the trained device (i.e. garage door opener, gate operator, security system, entry door lock, home/office lighting, etc.). For convenience, the hand-held transmitter of the device may also be used at any time. In the event that there are still programming difficulties or questions, contact HomeLink at: **www.homelink.com or 1-800-355-3515**.

Erasing HomeLink Buttons

To erase programming from the three buttons (individual buttons cannot be erased but can be ″reprogrammed″ - note below), follow the step noted:

- Press and hold the two outer HomeLink buttons until the indicator light begins to flash-after 20 seconds. Release both buttons. Do not hold for longer that 30 seconds. HomeLink is now in the train (or learning) mode and can be programmed at any time beginning with ″Programming″ - step 2.

Downloaded from www.Manualslib.com manuals search engine

Reprogramming a Single HomeLink Button

To program a device to HomeLink using a HomeLink button previously trained, follow these steps:

1. Press and hold the desired HomeLink button. **Do NOT** release the button.

2. The indicator light will begin to flash after 20 seconds. Without releasing the HomeLink button, proceed with "Programming" step 2

For questions or comments, contact HomeLink at: **www.homelink.com or 1-800-355-3515**.

Security

If you sell your vehicle, be sure to erase the frequencies.

To erase all of the previously trained frequencies, hold down both outside buttons until the green light begins to flash.

This device complies with part 15 of FCC rules and with RSS-210 of Industry Canada. Operation is subject to the following conditions:

- This device may not cause harmful interference.
- This device must accept any interference that may be received including interference that may cause undesired operation.

NOTE: Changes or modifications not expressly approved by the party responsible for compliance could void the user's authority to operate the equipment.

HomeLink® is a trademark owned by Johnson Controls, Inc.

Downloaded from www.Manualslib.com manuals search engine

POWER SUNROOF — IF EQUIPPED

The power sunroof switches are located between the sun visors on the overhead console.

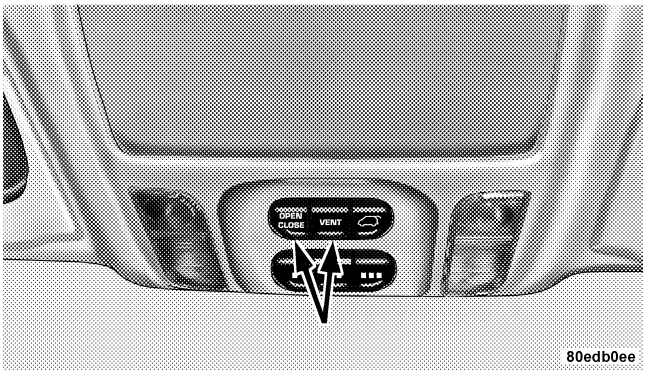

Press and hold the switch rearward to fully open the sunroof. The sunroof can be stopped at any position between closed and full open. Momentarily pressing the switch rearward will activate the Express Open Feature, causing the sunroof to open automatically.

Press and hold the button in the center of the sunroof switch to open the vent. The sunroof can be stopped at any position between closed and full vent. To close the sunroof from the vent position, press and hold the switch forward. Releasing the switch will stop the movement of the sunroof and the sunroof will remain in the partial vent position until the switch is pushed forward again.

NOTE: The power sunroof switches remain active for up to 45 seconds after the ignition switch has been turned off. Opening either front door will cancel this feature.

Express Open Feature

The sunroof is equipped with an intermediate stop or comfort stop position. This feature is designed to eliminate wind buffeting at vehicle speeds between 20-40 mph (32-64 km/h). To operate this feature, momentarily press the switch rearward to activate the Express Open Feature

Downloaded from www.Manualslib.com manuals search engine

and the glass will automatically stop at the comfort stop position. Pressing the switch rearward again will fully open the sunroof.

During the Express Open operation, any movement of the switch will stop the sunroof and it will remain in a partial open position. Again, momentarily pressing the switch rearward will activate the Express Open Feature.

To close the sunroof, hold the switch in the forward position. Again, any release of the switch will stop the movement and the sunroof will remain in a partial open condition until the switch is pushed forward again.

The sunshade can be opened manually. It will also open as the sunroof opens. The sunshade cannot be closed if the sunroof is open.

WARNING!

- **Never leave children in a vehicle, with the keys in the ignition switch. Occupants, particularly unattended children, can become entrapped by the power sunroof while operating the power sunroof switch. Such entrapment may result in serious injury or death.**
- **In an accident, there is a greater risk of being thrown from a vehicle with an open sunroof. You could also be seriously injured or killed. Always fasten your seat belt properly and make sure all passengers are properly secured too.**
- **Do not allow small children to operate the sunroof. Never allow fingers or other body parts, or any object to project through the sunroof opening. Injury may result.**

Downloaded from www.Manualslib.com manuals search engine

Wind Buffeting

Wind buffeting can be described as the perception of pressure on the ears or a helicopter type sound in the ears. Your vehicle may exhibit wind buffeting with the windows down, or the sunroof (if equipped) in certain open or partially open positions. This is a normal occurrence and can be minimized. If the buffeting occurs with the rear windows open, open the front and rear windows together to minimize the buffeting. If the buffeting occurs with the sunroof open, adjust the sunroof opening to minimize the buffeting or open any window.

Sunroof Maintenance

Use only a non-abrasive cleaner and a soft cloth to clean the glass panel.

ELECTRICAL POWER OUTLETS

There are two 12 volt power outlets located on the instrument panel below the radio. The driver's side outlet is controlled by the ignition switch and the passenger side outlet is connected directly to the battery. The driver's side outlet will also operate a conventional cigar lighter unit (if equipped with an optional Smoker's Package).

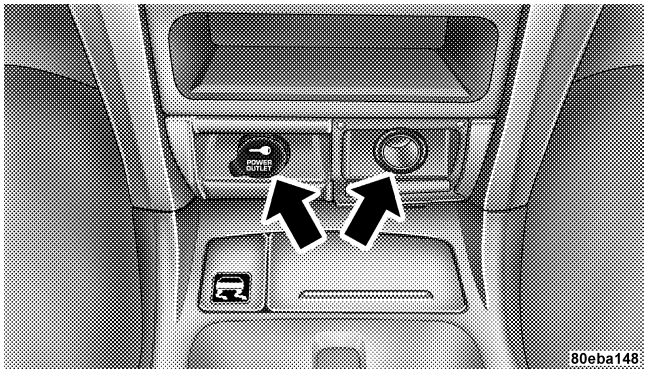

Downloaded from www.Manualslib.com manuals search engine

A third outlet is located on the back of the front center console near the floor, and is also controlled by the ignition switch.

A fourth outlet is located on the driver's side, in the rear cargo area and is also controlled by the ignition switch.

The outlets include tethered caps labeled with a key or battery symbol indicating the power source. The passenger side instrument panel and center console outlets are powered directly from the battery, items plugged into these outlets may discharge the battery and/or prevent engine starting.

The passenger side and center console outlets are protected by an automatic reset circuit breaker. The automatic circuit breaker restores power when the overload is removed.

NOTE: If desired, the fourth power outlet in the rear cargo area can be converted by your authorized dealer to provide power with the ignition switch in the OFF position.

Electrical Outlet Use With Engine Off

CAUTION!

- **Many accessories that can be plugged in draw power from the vehicle's battery, even when not in use (i.e. cellular phones, etc.). Eventually, if plugged in long enough, the vehicle's battery will discharge sufficiently to degrade battery life and/or prevent engine starting.**
- **Accessories that draw higher power (i.e. coolers, vacuum cleaners, lights, etc.), will degrade the battery even more quickly. Only use these intermittently and with greater caution.**
- **After the use of high power draw accessories, or long periods of the vehicle not being started (with accessories still plugged in), the vehicle must be driven a sufficient length of time to allow the alternator to recharge the vehicle's battery.**
- **Power outlets are designed for accessory plugs only. Do not hang any type of accessory or accessory bracket from the plug. Improper use of the power outlet can cause damage not covered by your warranty.**

Downloaded from www.Manualslib.com manuals search engine

CUPHOLDERS

Front Seat Cupholders

The cupholders are located in the forward edge of the center console. Push down on the forward edge of the console to release the cupholders. Press the cover up when the cupholders are no longer needed.

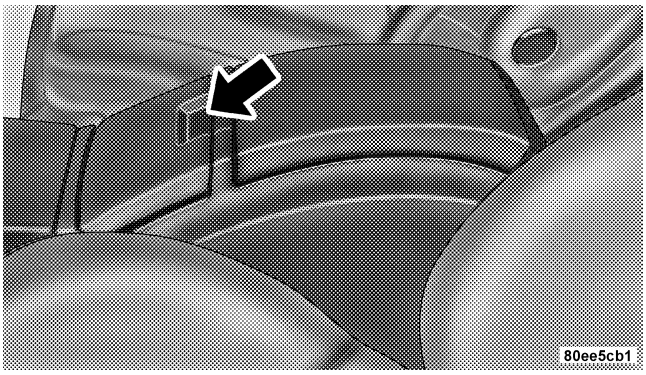

Second Row Seat Cupholders

The second row seat cupholders are located in the forward edge of the center console located between the second row seats. Push down on the forward edge of the console to release the cupholders. Press the cover up when the cupholders are no longer needed.

Third Row Seat Cupholders

There are cupholders located in each rear trim panel for the third row seat passengers.

STORAGE

Console Features

The center consoles/armrests have a pencil/tire gage holder mounted on the underside of the cover. The bottom of the console bins also have built in holders for compact discs or cassette tapes.

Downloaded from www.Manualslib.com manuals search engine

Rear Cargo Storage Bin

The storage bin is located in the floor of the rear cargo area. To open lift up on the handle.

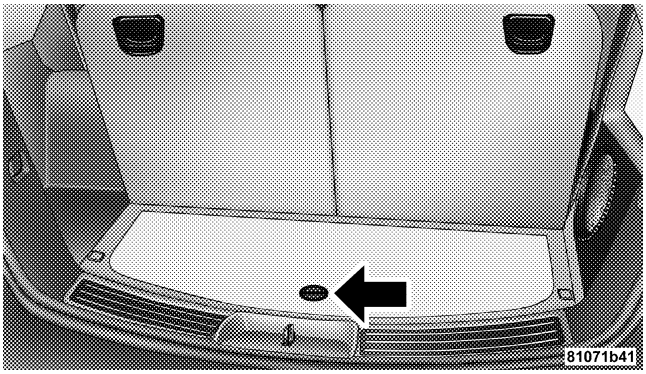

Retractable Cargo Area Cover — If Equipped

To cover the cargo area:

1. Fold down the third row seatbacks.

2. Unfold the cargo cover extensions and lock into place.

3. Insert the pins on the ends of the cover into the slots located on the trim panel behind the second row seatbacks.

4. Grasp the center portion of the cover flap. Pull it over the cargo area.

5. Insert the pins on the ends of the cover flap into the slots on the rear trim panel.

6. The liftgate may be opened or closed with the cargo cover in place.

Downloaded from www.Manualslib.com manuals search engine

WARNING!

In an accident a cargo cover loose in the vehicle could cause injury. It could fly around in a sudden stop and strike someone in the vehicle. Do not store the cargo cover on the cargo floor or in the passenger compartment. Remove the cover from the vehicle when taken from its mounting. Do not store in the vehicle.

Stowed Position

1. Fold down the third row seatbacks.

2. Fold the cargo cover extensions to their stowed position and lock into place.

3. Insert the pins on the ends of the cover into the slots located on the trim panel behind the third row seatbacks.

4. Grasp the center portion of the cover flap. Pull it over the cargo area.

5. Insert the pins on the ends of the cover flap into the slots on the rear trim panel.

6. The liftgate may be opened or closed with the cargo cover in place.

Cargo Tie-Down Hooks

The tie-downs located on cargo area floor and on the rear trim panels should be used to safely secure loads when vehicle is moving.

Downloaded from www.Manualslib.com manuals search engine

WARNING!

- **Cargo tie-down hooks are not safe anchors for a child seat tether strap. In a sudden stop or collision a hook could pull loose and allow the child seat to come loose. A child could be badly injured. Use only the anchors provided for child seat tethers.**
- **The weight and position of cargo and passengers can change the vehicle center of gravity and vehicle handling. To avoid loss of control resulting in personal injury, follow these guidelines for loading your vehicle:**

- Always place cargo evenly on the cargo floor. Put heavier objects as low and as far forward as possible.
- Place as much cargo as possible in front of the rear axle. Too much weight or improperly placed weight over or behind the rear axle can cause the rear of the vehicle to sway.
- Do not pile luggage or cargo higher than the top of the seatback. This could impair visibility or become a dangerous projectile in a sudden stop or collision.

WARNING!

To help protect against personal injury, passengers should not be seated in the rear cargo area. The rear cargo space is intended for load carrying purposes only, not for passengers, who should sit in seats and use seat belts.

Downloaded from www.Manualslib.com manuals search engine

ROOF LUGGAGE RACK — IF EQUIPPED

The crossbars and siderails are designed to carry the weight on vehicles equipped with a luggage rack. The load must not exceed 150 lbs (68 kg), and should be uniformly distributed over the luggage rack crossbars.

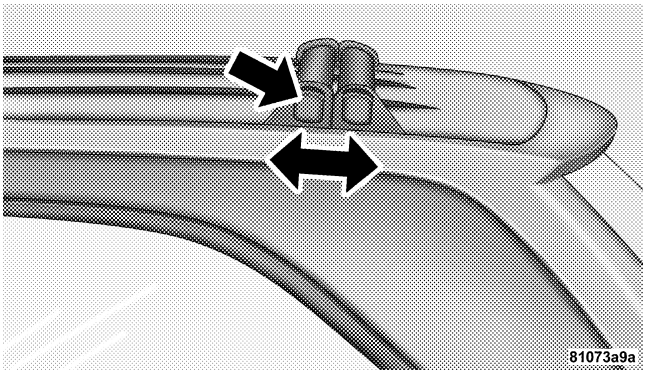

Distribute cargo weight evenly on the roof rack crossbars. The roof rack does not increase the total load carrying capacity of the vehicle. Be sure the total load of cargo inside the vehicle plus that on the external rack does not exceed the maximum vehicle load capacity.

To move the cross bars, press the upper edge of each cross bar button, then move the cross bar to the desired position. This is can be done with one person standing on each side of the vehicle, moving the cross bar at the same time. Once the cross bar is in place, press the lower edge of the cross bar button to lock it into position.

Attempt to move the crossbar again to ensure that it has properly locked into position.

NOTE: To reduce the amount of wind noise when the cross bars are not in use, move both cross bars next to each other towards the rear of the vehicle in the rear most position.

The tie down holes on the cross bar ends should always be used to tie down the load. Check the straps frequently to be sure that the load remains securely attached.

Downloaded from www.Manualslib.com manuals search engine

CAUTION!

- **To avoid damage to the roof rack and vehicle, do not exceed the maximum roof rack load capacity of 150 lbs (68 kg). Always distribute heavy loads as evenly as possible and secure the load appropriately.**
- **Long loads which extend over the windshield, such as wood panels or surfboards, or loads with large frontal area should be secured to both the front and rear of the vehicle.**
- **Travel at reduced speeds and turn corners carefully when carrying large or heavy loads on the roof rack. Wind forces, due to natural causes or nearby truck traffic, can add sudden upward loads. This is especially true on large flat loads and may result in damage to the cargo or your vehicle.**

WARNING!

Cargo must be securely tied before driving your vehicle. Improperly secured loads can fly off the vehicle, particularly at high speeds, resulting in personal injury or property damage. Follow the Roof Rack Cautions when carrying cargo on your roof rack.

LOAD LEVELING SYSTEM

The automatic load leveling system will provide a level riding vehicle under most passenger and cargo loading conditions.

A hydraulic pump contained within the shock absorbers raises the rear of the vehicle to the correct height. It takes approximately 1 mile (1.6 km) of driving for the leveling to complete depending on road surface conditions.

If the leveled vehicle is not moved for approximately 15 hours, the leveling system will bleed itself down. The vehicle must be driven to reset the system.

Downloaded from www.Manualslib.com manuals search engine

UNDERSTANDING YOUR INSTRUMENT PANEL

CONTENTS

- Instruments And Controls 142
- Instrument Cluster 143
- Instrument Cluster Descriptions 144
- Electronic Vehicle Information Center (EVIC) . . .151
  - Customer Programmable Features — If Equipped 154
  - Compass Display — If Equipped 157
  - Mini-Trip Functions — If Equipped 159
- Setting The Analog Clock 160
- Electronic Digital Clock 160
  - Clock Setting Procedure 160
- Sales Code RAH—AM & FM Stereo Radio With CD Player And CD/DVD Changer Controls 161
  - Radio Operation 161
  - CD Player Operation 163
  - CD/DVD Changer Operation 165
- Sales Code RBP—AM & FM Stereo Radio With Cassette Tape Player, CD Player, And Optional CD/DVD Changer Controls 165

Downloaded from www.Manualslib.com manuals search engine

- Radio Operation 166
- Tape Player Operation 170
- CD Player Operation 172
- CD/DVD Changer Operation — If Equipped .173

■ 6 Disc CD/DVD Changer (Rdv) — If Equipped .175

- Operating Instructions — CD/DVD Changer . .175
- Eject (EJT) Button 177
- Operating Instructions — Remote Control 178
- Operating Instructions — Video Screen 182
- Operating Instructions — Headphones 183
- Operating Instructions — MP3 Player, Portable Walkman 185
- Operating Instructions — Video Games/Camcorders 185

■ Satellite Radio — If Equipped 186

- System Activation 186
- Electronic Serial Number/Sirius Identification Number (ENS/SID) 186
- Selecting Satellite Mode In RBB, RAH And RBK Radios 187
- Selecting Satellite Mode In RBP, RBU, RAZ, And RBQ Radios 187
- Selecting a Channel 188
- Storing And Selecting Pre-Set Channels 188
- Using The PTY (Program Type) Button (If Equipped) 188
- PTY Button "Scan" 188
- PTY Button "Seek" 189

Downloaded from www.Manualslib.com manuals search engine

□ Satellite Antenna 189
□ Reception Quality 189
■ Remote Sound System Controls 190
□ Radio Operation 190
□ Tape Player 190
□ CD Player 191
■ Radio General Information 191
□ Radio Broadcast Signals 191
□ Two Types Of Signals 191
□ Electrical Disturbances 191
□ AM Reception 192
□ FM Reception 192
■ Cassette Tape And Player Maintenance 192
■ CD/DVD Disc Maintenance 193
■ Radio Operation And Cellular Phones 194
■ Navigation System — If Equipped 194
■ Climate Controls 195
□ Dual-Zone Automatic Temperature Control . . .195
□ Electric Rear Window Defroster 205

Downloaded from www.Manualslib.com manuals search engine

INSTRUMENTS AND CONTROLS

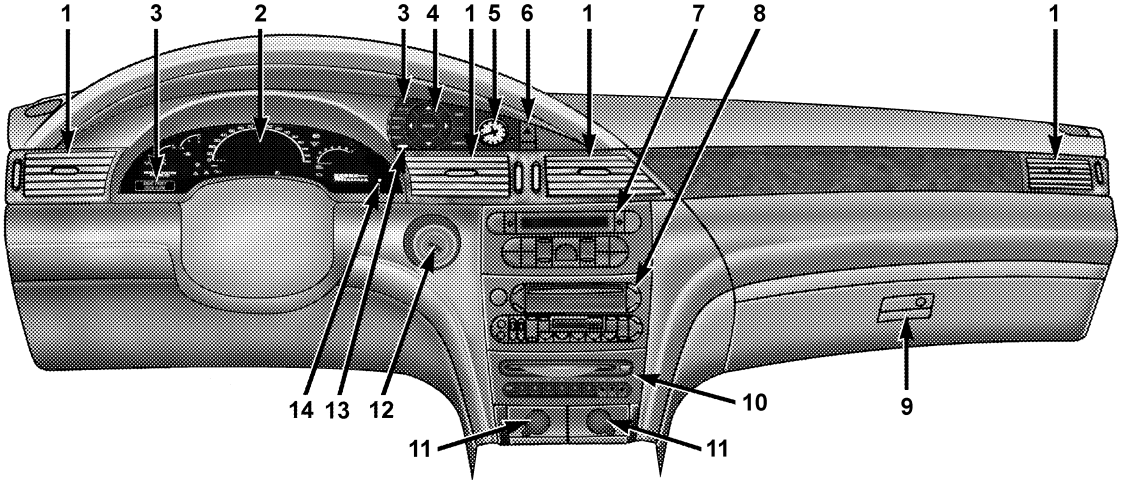

1. Air Outlets
2. Instrument Cluster
3. Electronic Vehicle Information Center
4. Navigation Buttons*
5. Analog Clock
6. Hazard Switch
7. Climate Controls
8. Radio
9. Glove Box
10. CD/DVD Player*
11. Power Outlets
12. Ignition Switch
13. Theft Alarm / Immobilizer Light
14. Trip Odometer Button

* If Equipped

80ee5ba1

Downloaded from www.Manualslib.com manuals search engine

INSTRUMENT CLUSTER

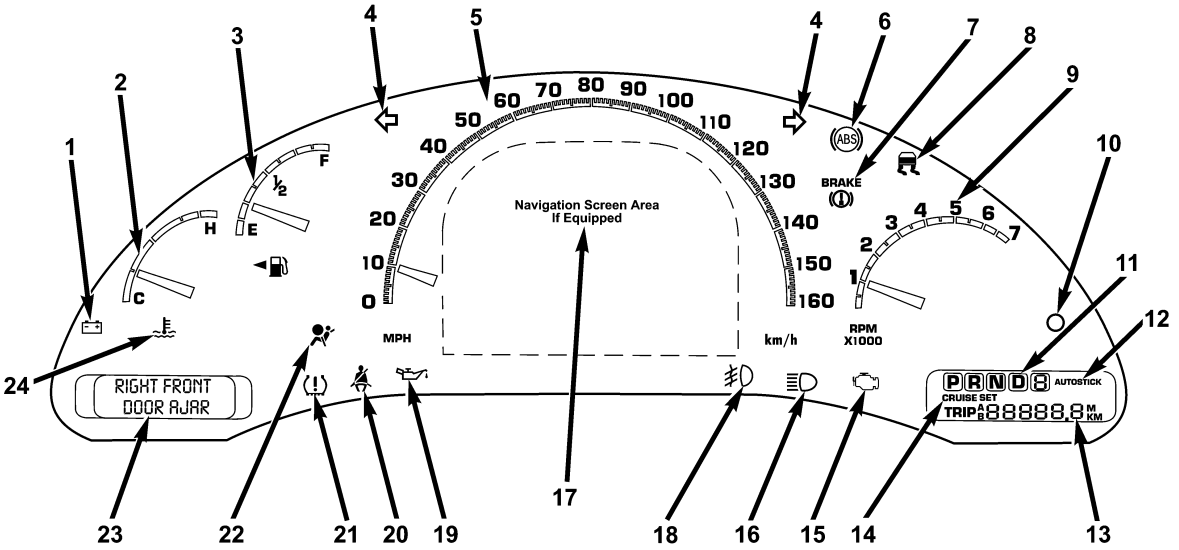

811b8bb8

Downloaded from www.Manualslib.com manuals search engine

INSTRUMENT CLUSTER DESCRIPTIONS

1. Voltage Light

This light monitors the electrical system voltage. The light should turn on momentarily as the engine is started. If the light stays on or turns on while driving, it indicates a problem with the charging system. Immediate service should be obtained.

2. Temperature Gauge

The temperature gauge shows engine coolant temperature. Any reading within the normal range indicates that the engine cooling system is operating satisfactorily.

The gauge pointer will likely indicate a higher temperature when driving in hot weather, up mountain grades, or when towing a trailer. It should not be allowed to exceed the upper limits of the normal operating range.

CAUTION!

Driving with a hot engine cooling system could damage your vehicle. If temperature gauge reads (H), pull over and stop the vehicle. Idle the vehicle with the air conditioner turned off until the pointer drops back into the normal range. If the pointer remains on the "H", and you hear continuous chimes, turn the engine off immediately, and call for service.

Downloaded from www.Manualslib.com manuals search engine

WARNING!

A hot engine cooling system is dangerous. You or others could be badly burned by steam or boiling coolant. You may want to call a service center if your vehicle overheats. If you decide to look under the hood yourself, see Section 7 of this manual. Follow the warnings under the Cooling System Pressure Cap paragraph.

3. Fuel Gauge

The pointer shows the level of fuel in the fuel tank when the ignition switch is in the ON position.

The Low Fuel Light will turn on when the fuel level reaches approximately 2 to 4 gallons (7 to 15 liters) this light will remain on until fuel is added.

4. Turn Signal Indicators

The arrow will flash with the exterior turn signal when the turn signal lever is operated.

If the vehicle electronics sense that the vehicle has traveled about one mile with the turn signals on, a chime will sound to alert you to turn the signals off. If either indicator flashes at a rapid rate, check for a defective outside light bulb.

5. Speedometer

Indicates vehicle speed.

6. Anti-Lock Light

This light monitors the Anti-Lock Brake System. The light will turn on when the ignition switch is turned to the ON position and may stay on for as long as four seconds.

If the ABS light remains on or turns on while driving, it indicates that the Anti-Lock portion of the brake system

Downloaded from www.Manualslib.com manuals search engine

is not functioning and that service is required. However, the conventional brake system will continue to operate normally if the BRAKE warning light is not on.

If the ABS light is on, the brake system should be serviced as soon as possible to restore the benefits of Anti-Lock brakes. If the ABS light does not turn on when the Ignition switch is turned to the ON position, have the light inspected by an authorized dealer.

7. Brake System Warning Light

This light monitors various brake functions, including brake fluid level and parking brake application. If the brake light turns on, it may indicate that the parking brake is applied, there is a low brake fluid level or there is a problem with the anit-lock brake system.

The dual brake system provides a reserve braking capacity in the event of a failure to a portion of the hydraulic system. Failure of either half of the dual brake system is indicated by the Brake Warning Light which will turn on when the brake fluid level in the master cylinder has dropped below a specified level.

The light will remain on until the cause is corrected.

NOTE: The light may flash momentarily during sharp cornering maneuvers which change fluid level conditions. The vehicle should have service performed.

If brake failure is indicated, immediate repair is necessary.

WARNING!

Driving a vehicle with the brake light on is dangerous. Part of the brake system may have failed. It will take longer to stop the vehicle. You could have an accident. Have the vehicle checked immediately.

Downloaded from www.Manualslib.com manuals search engine

Vehicles equipped with Anti-Lock brakes (ABS), are also equipped with Electronic Brake Force Distribution (EBD). In the event of an EBD failure, the Brake Warning Light will turn on along with the ABS Light. Immediate repair to the ABS system is required.

The operation of the Brake Warning Light can be checked by turning the ignition switch from the OFF position to the ON position. The light should illuminate for approximately two seconds. The light should then turn off unless the parking brake is applied or a brake fault is detected. If the light does not illuminate, have the light inspected by an authorized dealer.

The light also will turn on when the parking brake is applied with the ignition switch in the ON position.

NOTE: This light shows only that the parking brake is applied. It does not show the degree of brake application.

8. Traction Control Indicator — If Equipped

This display indicator illuminates momentarily as a bulb check when the ignition switch is first turned ON.

The traction control Indicator will turn on if:

- The traction control system is in use.
- The Traction Control switch has been used to turn the system OFF.
- There is a Traction Control System malfunction.
- The system has been deactivated to prevent damage to the brake system due to overheated brake temperatures.

NOTE: Extended heavy use of Traction Control may cause the system to deactivate and turn on the Traction Control Light. This is to prevent overheating of the brake system and is a normal condition. The system will remain

Downloaded from www.Manualslib.com manuals search engine

disabled for about 4 minutes until the brakes have cooled. The system will automatically reactivate and turn off the Traction Control Light.

9. Tachometer
The red segments indicate the maximum permissible engine revolutions-per-minute (r.p.m. x 1000) for each gear range. Before reaching the red area, ease up on the accelerator.

10. Trip Odometer Button
Press this button to change the display from odometer to either of the two trip odometer settings. The word TRIP and either "A" or "B" will appear when in the trip odometer mode. Push in and hold the button for two seconds to reset the trip odometer to 0 miles or kilometers. The odometer must be in trip mode to reset.

11. Transmission Range Indicator
This display indicator shows the automatic transmission gear selection.

12. AutoStick Light
This display indicator illuminates when the gearshift lever is moved to the AutoStick position.

13. Odometer/Trip Odometer
The odometer shows the total distance the vehicle has been driven.

U.S. federal regulations require that upon transfer of vehicle ownership, the seller certify to the purchaser the correct mileage that the vehicle has been driven. Therefore, if the odometer reading is changed during repair or replacement, be sure to keep a record of the reading before and after the service so that the correct mileage can be determined.

The two trip odometers show individual trip mileage. To switch from odometer to trip odometers, press and

Downloaded from www.Manualslib.com manuals search engine

release the Trip Odometer button. To reset a trip odometer, display the desired trip odometer to be reset then push and hold the button until the display resets (approximately 2 seconds).

14. Cruise Indicator

This display indicator shows that the Speed Control System is ON.

15. Malfunction Indicator Light

This light is part of an onboard diagnostic system called OBD that monitors engine and automatic transmission control systems. The light will illuminate when the key is in the ON position before engine start. If the bulb does not come on when turning the key from OFF to ON, have the condition checked promptly.

Certain conditions such as a loose or missing gas cap, poor fuel quality, etc. may illuminate the light after engine start. The vehicle should be serviced if the light stays on through several of your typical driving cycles. In most situations the vehicle will drive normally and will not require towing.

The Malfunction Indicator Light flashes to alert you to serious conditions that could lead to immediate loss of power or severe catalytic converter damage. The vehicle should be serviced as soon as possible if this occurs.

16. High Beam Light

This light shows that the headlights are on high beam. Pull the Multi-Function lever towards the steering wheel to switch the headlights from high or low beam.

17. Navigation Screen — If Equipped

The navigation system provides maps, turn identification, selection menus and instructions for selecting a variety of destinations and routes. Refer to your "Navigation User's Manual" for detailed operating instructions.

Downloaded from www.Manualslib.com manuals search engine

18. Front Fog Light Indicator — If Equipped

This light shows the front fog lights are ON.

19. Oil Pressure Warning Light

This light shows low engine oil pressure. The light should turn on momentarily when the engine is started. If the light turns on while driving, stop the vehicle and shut off the engine as soon as possible. A continuous chime will sound when this light turns on.

Do not operate the vehicle until the cause is corrected. This light does not show how much oil is in the engine. The engine oil level must be checked under the hood.

20. Seat Belt Reminder Light

When the ignition switch is first turned ON, this light will turn on for 5 to 8 seconds as a bulb check. During the bulb check, if the driver's seat belt is unbuckled, a chime will sound. After the bulb check or when driving, if the driver seat belt remains unbuckled, the Seat Belt Warning Light will flash or remain on continuously. Refer to "Enhanced Driver Seat Belt Reminder System (BeltAlert™)" in the Occupant Restraints section for more information.

21. Tire Pressure Monitor Warning Light — If Equipped

This light will turn on when there is a Low tire pressure condition. The light will also turn on if a problem exist with any tire sensor. The light will remain on until the tire pressure is properly set or the problem with the sensor is corrected.

This light will turn on momentarily as a bulb check when the engine is started.

When the tire pressure monitoring system warning light is lit, one or more of your tires is significantly underinflated. You should stop and check your tires as soon as possible, and inflate them to the proper pressure as indicated on the tire and loading information placard.

Downloaded from www.Manualslib.com manuals search engine

Driving on a significantly underinflated tire causes the tire to overheat and can lead to tire failure. Underinflation also reduces fuel efficiency and tire tread life, and may affect the vehicle's handling and stopping ability. Each tire, including the spare, should be checked monthly when cold and set to the recommended inflation pressure as specified in the tire and loading information placard and owner's manual.

22. Airbag Light

This light turns on and remains on for 6 to 8 seconds as a bulb check when the ignition switch is first turned ON. If the light is not on during starting, stays on, or turns on while driving, have the system inspected by an authorized dealer as soon as possible.

23. Electronic Vehicle Information Center Display

When the appropriate conditions exist, this display shows the Electronic Vehicle Information Center (EVIC) messages.

24. Engine Temperature Warning Light

This light warns of an overheated engine condition. If this light is accompanied by a continuous chime, the engine temperature is critically hot, and the vehicle should be turned off immediately. The vehicle should be serviced as soon as possible.

ELECTRONIC VEHICLE INFORMATION CENTER (EVIC)

The Electronic Vehicle Information Center (EVIC) consists of the following:

- Vehicle information warning message displays
- Tire Pressure Monitor System — If Equipped
- Customer programmable features

Downloaded from www.Manualslib.com manuals search engine

- Compass display — If Equipped
- Mini-Trip functions — If Equipped

Pressing the MENU button will change the displayed programming features. Pressing the STEP button will display the available choices. Pressing the MENU button a second time accepts a selected choice.

When the appropriate conditions exist, the Electronic Vehicle Information Center (EVIC) displays the following messages.

- LEFT/RIGHT TURN SIGNAL ON (with a continuous warning chime)
- INVALID KEY & FOB (with a single chime)
- SERVICE IMMOBILIZER (with a single chime)
- KEY FOB BATTERY LOW (with a single chime)
- KEY & FOB PROGRAMMED (with a single chime)
- PROGRAM KEY & FOB
- MEMORY #1/#2 POSITION SET (with a single chime)
- MEMORY #1/#2 POS SELECTED
- MEMORY SYSTEM DISABLED VEHICLE NOT IN PARK (with a single chime)
- SET INHIBITED DUE TO MOTION (with a single chime)
- FOB LINKED (with a single chime)
- FOB UNLINKED (with a single chime)
- PARK BRAKE ENGAGED (with a single chime)
- LOW BRAKE FLUID (with a single chime)
- LOW FUEL (with a single chime)
- MENU IN PARK ONLY
- LIST # ALERT MESSAGES

Downloaded from www.Manualslib.com manuals search engine

- UNLOCK TO OPEN LIFTGATE (with a single chime)
- PUT IN PARK FOR LIFTGATE (with a single chime)
- TOO COLD FOR PWR LIFTGATE (with a single chime)
- TOO HOT FOR PWR LIFTGATE (with a single chime)
- PERFORM SERVICE (with a single chime)
- LEFT/RIGHT FRONT DOOR AJAR (one or more, with a single chime if speed is above 1 mph)
- LEFT/RIGHT REAR DOOR AJAR (one or more, with a single chime if speed is above 1 mph)
- DOOR(S) AJAR (with a single chime)
- DOOR(S) AND GATE AJAR (with a single chime)
- LIFT GATE AJAR (with a single chime if speed is above 1 mph)
- WASHER FLUID LOW (with a single chime)
- PEDAL ADJUST DISABLED CRUISE ENGAGED
- PEDAL ADJUST DISABLED VEHICLE IN REVERSE
- CHANNEL 1, 2, OR 3 TRANSMIT (with a single chime)
- CHANNEL 1, 2, OR 3 TRAINING (with a single chime)
- CHANNEL 1, 2, OR 3 TRAINED (with a single chime)
- CLEARING CHANNELS
- CHANNELS CLEARED
- CHANNELS DEFAULTED
- DID NOT TRAIN
- 1,2,3 OR 4 TIRE(S) LOW PRESSURE (Refer to “Starting And Operating, Tire Section”)

Downloaded from www.Manualslib.com manuals search engine

- 1,2,3 OR 4 TIRE(S) HIGH PRESSURE (Refer to "Starting And Operating, Tire Section")
- SERVICE TIRE SYSTEM SOON (Refer to "Starting And Operating, Tire Section")
- TIRE PRESSURE UNAVAILABLE (Refer to "Starting And Operating, Tire Section")
- TCS SUSPENDED (Traction Control System, with a graphic and single chime)
- TCS ACTIVE (Traction Control System, with a graphic)
- SERVICE TCS SYSTEM (Traction Control System, with a graphic and single chime)

Customer Programmable Features — If Equipped

Press the MENU button until one of the following display choices appears:

Language?
When in this display you may select one of three languages for all display nomenclature, including the trip computer functions and navigation system. Press the STEP button while in this display selects English, Francais, or Espanol. As you continue the displayed information will be shown in the selected language.

Display U.S. or Metric?
Pressing the US/M button will change the EVIC, odometer, navigation system and A/C Control units from US to Metric.

Use factory Settings?
When in this display you may select to use the factory settings and no programmable features will be offered.

Downloaded from www.Manualslib.com manuals search engine

Auto Door Locks?
When this feature is selected, all doors and the liftgate lock automatically when the speed of the vehicle reaches 15 mph (25 km/h). Pressing the STEP button when in this display will select "Yes" or "No."

Auto Unlock On Exit?
When this feature is selected all the vehicle's doors will unlock when the driver's door is opened if the vehicle is stopped and the transmission is in P (Park) or N (Neutral) position. Pressing the STEP button when in this display will select "Yes" or "No."

Remote Unlock Driver's Door 1st?
When this feature is selected only the driver's door will unlock on the first press of the remote keyless entry unlock button and require a second press to unlock the remaining locked doors and liftgate. When **REMOTE UNLOCK ALL DOORS** is selected all of the doors and the liftgate will unlock at the first press of the remote keyless entry unlock button. Pressing the STEP button when in this display will select DRIVER'S DOOR 1ST or ALL DOORS.

Remote Linked To Memory? (Available with Memory Seat Only)
When this feature is selected the memory seat, mirror, and radio settings will return to the memory set position when the remote keyless entry "Unlock" button is pressed. If this feature is not selected then the memory seat, mirror, and radio settings can only return to the memory set position using the door mounted switch. Pressing the STEP button when in this display will select "Yes" or "No."

Sound Horn On Lock?
When this feature is selected a short horn sound will occur when the remote keyless entry "Lock" button is pressed. This feature may be selected with or without the

Downloaded from www.Manualslib.com manuals search engine

flash lights on lock/unlock feature. Pressing the STEP button when in this display will select "Yes" or "No."

Flash Lights On Lock/Unlock?
When this feature is selected, the front and rear turn signals will flash when the doors are locked or unlocked using the remote keyless entry transmitter. This feature may be selected with or without the sound horn on lock feature selected. Pressing the STEP button when in this display will select "Yes" or "No."

Headlamp Delay
When this feature is selected the driver can choose, when exiting the vehicle, to have the headlamps remain on for 30, 60, or 90 seconds, or not remain on. Pressing the STEP button when in this display will select 30, 60, 90, or OFF.

Headlamp On With Wipers? (Available with Auto Headlights Only)
When this feature is selected and the headlight switch has at least once been moved to the AUTO position, the headlights will turn on in approximately 10 seconds when the wipers are turned on. The headlights will also turn off when the wipers are turned off if they were turned on in this way. Pressing the STEP button when in this display will select "Yes" or "No."

NOTE: Turning the headlights on during the daytime causes the instrument panel lights to dim. To increase the brightness, refer to "Lights" in this section.

Service Interval
When this feature is selected a service interval between 2,000 miles (3 200 km) and 6, 000 miles (10 000 km) in 500 mile (800 km) increments may be selected. Pressing the STEP button when in this display will select distances between 2,000 miles (3 200 km) and 6, 000 miles (10 000 km) in 500 mile (800 km) increments.

Downloaded from www.Manualslib.com manuals search engine

Reset Service Distance (Displays Only if Service Interval was Changed)
When this feature is selected the current accumulated service distance can be reset to the newly selected service interval. Pressing the STEP button when in this display will select "Yes" or "No."

Power Accessory Delay?
When this feature is selected, the power window switches, radio, hands–free system, DVD video system, power sunroof, and power outlets will remain active for up to 45 seconds after the ignition switch has been turned off. Opening a vehicle door or liftgate will cancel this feature.

Easy Exit Seat? (Available with Memory Seat Only)
When this feature is selected, the driver's seat moves rearward 5 cm (2 inches) or to the farthest rearward position if this distance is less than 5 cm (2 inches) when the key is removed from the ignition switch so that the driver can more easily exit the vehicle. The seat will return to the memorized seat location (if REMOTE LINK TO MEMORY is set to YES) when the remote keyless entry transmitter is used to unlock the door. Pressing the STEP button when in this display will select "Yes" or "No."

Retrain Tire Sensors (Available with Tire Pressure Monitor System Only)
The Tire Pressure Monitor system must be retrained following a tire rotation or wheel rim mounted sensor replacement. See your authorized dealer for service.

Compass Display — If Equipped

This display provides one of eight compass readings to indicate the direction the vehicle is facing.

Downloaded from www.Manualslib.com manuals search engine

Automatic Compass Calibration
This compass is self calibrating which eliminates the need to manually set the compass. When the vehicle is new, the compass may appear erratic and the EVIC will display "COMPASS CALIBRATING" until the compass is calibrated. The compass will calibrate automatically after approximately 40 seconds if no buttons are pressed and the vehicle is in Park. You may also calibrate the compass by completing one 360° turn in an area free from large metal or metallic objects, the "COMPASS CALIBRATING" EVIC message will turn off and the compass will function normally.

Manual Compass Calibration
If the compass appears erratic and the "COMPASS CALIBRATING" message does not appear in the EVIC display, you must put the compass into the Calibration Mode manually.

To put into a Calibration Mode: Turn on the ignition switch and set the display to Compass. Press the RESET button for at least 10 seconds until the "COMPASS CALIBRATING" message appears. Release the RESET button and complete one 360° turn in an area free from large metal objects. The "COMPASS CALIBRATING" message will turn off and the compass will function normally.

Compass Variance
Compass Variance is the difference between magnetic North and Geographic North. In some areas of the country, the difference between magnetic and geographic North is great enough to cause the compass to give false readings. If this occurs, the compass variance must be set.

NOTE: Magnetic materials should be kept away from the overhead console.

Downloaded from www.Manualslib.com manuals search engine

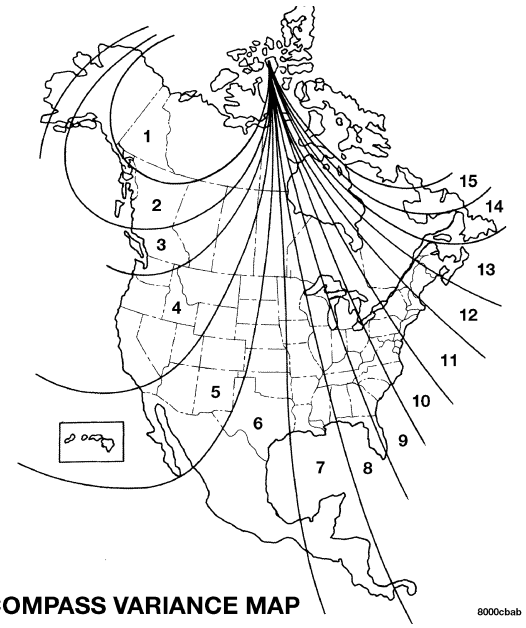

COMPASS VARIANCE MAP

To set the variance: Turn the ignition switch ON and set the display to Compass. Press the RESET button for approximately 5 seconds but no more than 10 seconds. The "COMPASS VARIANCE" message and the last variance zone number will be displayed. Press the STEP button to select the proper variance zone as shown in the map. Press the RESET button to set the new variance zone and resume normal operation.

Mini-Trip Functions — If Equipped

This displays information on the following:

- *Average Fuel Economy (ECO AVG)*

Shows the average fuel economy since the last reset. The minimum average fuel economy that will be displayed on reset is 0.3 mpg.

- *Distance To Empty (DTE)*

Shows the estimated distance that can be travelled with the fuel remaining in the tank. This estimated distance is determined using the MPG for the last few minutes.

Downloaded from www.Manualslib.com manuals search engine

- *Off Mode*

Shows a blank display.

- *Step Button*

Push this button to cycle through all the Mini-trip functions.

To Reset The Display

Pressing and releasing the Reset button once will clear the resettable function currently being displayed. The resettable function is average fuel economy. Reset will only occur if the resettable function is currently being displayed.

SETTING THE ANALOG CLOCK

To set the analog clock at the top center of the instrument panel, press and hold the button until the setting is correct.

ELECTRONIC DIGITAL CLOCK

The clock and radio each use the display panel built into the radio. A digital readout shows the time in hours and minutes whenever the ignition switch is in the ON or ACC position and the time button is pressed.

When the ignition switch is in the OFF position, or when the radio frequency is being displayed, time keeping is accurately maintained.

Clock Setting Procedure

1. Turn the ignition switch to the ON or ACC position and press the time button. Using the tip of a ballpoint pen or similar object, press either the hour (H) or minute (M) buttons on the radio.

2. Press the H button to set hours or the M button to set minutes. The time setting will increase each time you press a button.

Downloaded from www.Manualslib.com manuals search engine

SALES CODE RAH—AM & FM STEREO RADIO WITH CD PLAYER AND CD/DVD CHANGER CONTROLS

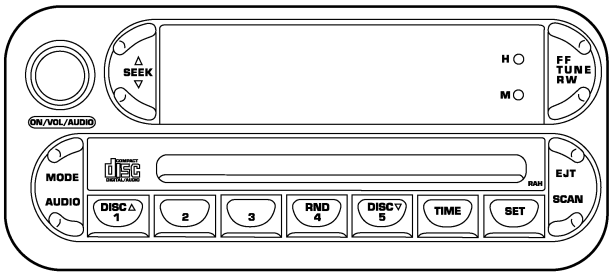

810236a4

Radio Operation

Power/Volume Control
Press the ON/VOL control to turn the radio on. Turn the volume control clockwise to increase the volume.

NOTE: Power to operate the radio is supplied through the ignition switch. It must be in the ON or ACC position to operate the radio.

Mode
Press the MODE button to select between, AM, FM, CD, CD/DVD changer or the Satellite Radio (if equipped). When the Satellite Radio (if equipped) is selected "SA" will appear in your radio display.

A disc may remain in the radio while in the Satellite or radio mode.

Seek
Press and release the SEEK button to search for the next station in either the AM, FM or Satellite mode. Press the

Downloaded from www.Manualslib.com manuals search engine

top of the button to seek up and the bottom to seek down. The radio will remain tuned to the new station until you make another selection. Holding the button in will bypass stations without stopping until you release it.

Tuning

Press the TUNE control up or down to increase or decrease the frequency. If you press and hold the button, the radio will continue to tune until you release the button. The frequency will be displayed and continuously updated while the button is pressed.

Balance

The Balance control adjusts the left-to-right speaker balance. Press the AUDIO button, select BALANCE, then turn the volume knob to adjust the balance.

Fade

The Fade control provides for balance between the front and rear speakers. Press the AUDIO button, select FADE, then turn the volume knob to adjust the fade balance.

Tone Control

The Bass and/or Treble controls sound for the desired tone. Press the AUDIO button, select Bass or TREBLE, then turn the volume knob to increase or decrease amplification of the band.

To Set The Radio Push-Button Memory

When you are receiving a station that you wish to commit to push-button memory, press the SET button. SET 1 will show in the display window. Select the push-button you wish to lock onto this station and press and release that button. If a station is not selected within 5 seconds after pressing the SET button, the station will continue to play but will not be locked into push-button memory.

You may add a second station to each push-button by repeating the above procedure with this exception: Press the SET button twice and SET 2 will show in the display window. Each button can be set for SET 1 and SET 2 in

Downloaded from www.Manualslib.com manuals search engine

both AM and FM. This allows a total of 10 AM and 10 FM stations to be locked into memory. You can recall the stations stored in SET 2 memory by pressing the push-button twice.

To Change From Clock To Radio Mode
Press the TIME button to change the display between radio frequency and time.

General Information
This radio complies with Part 15 of FCC rules and with RSS-210 of Industry Canada. Operation is subject to the following conditions:

1. This device may not cause harmful interference,

2. This device must accept any interference received, including interference that may cause undesired operation.

NOTE: Changes or modifications not expressively approved by the party responsible for compliance could void the user's authority to operate the equipment.

CD Player Operation

NOTE: The ignition switch must be in the ON or ACC position and the volume control ON before the CD player will operate.

Inserting The Compact Disc

CAUTION!
This CD player will accept only 4–3/4 inch (12cm) discs only. The use of other sized discs may damage the CD player mechanism.

You may either insert or eject a disc with the radio OFF.

Downloaded from www.Manualslib.com manuals search engine

If you insert a disc with the ignition ON and the radio OFF, the display will show the time of day. If you insert a disc with the ignition OFF, the display will show the time of day for about 5 seconds, then go out.

If the power is ON, the unit will switch from radio to CD mode and begin to play when you insert the disc. The display will show the track number and index time in minutes and seconds. Play will begin at the start of track 1.

Seek
Press the top of the SEEK button for the next selection on the CD. Press the bottom of the button to return to the beginning of the current selection, or return to the beginning of the previous selection if the CD is within the first 10 seconds of the current selection.

EJT — Eject
Press the EJT button and the disc will unload and move to the entrance for easy removal. The unit will switch to the radio mode.

If you do not remove the disc within 15 seconds, it will be reloaded. The radio mode will continue to appear.

The disc can be ejected with the radio OFF.

FF/TUNE/RW
Press FF (Fast Forward) and the CD player will begin to fast forward until FF is released. The RW (Reverse) button works in a similar manner.

RND — Random Play
Press the RND button while the CD is playing to activate Random Play. This feature plays the selections on the compact disc in random order to provide an interesting change of pace.

Downloaded from www.Manualslib.com manuals search engine

Press the SEEK button to move to the next randomly selected track.

Press TUNE FF to fast forward through the tracks. Press the FF button a second time to stop the fast forward feature. If TUNE RW is pressed, the current track will reverse to the beginning of the track and begin playing.

Press the RND button a second time to stop Random Play.

CD/DVD Changer Operation

Press the MODE button to select between the CD player and the optional remote CD/DVD changer.

Time

Press the TIME button to change the display from elapsed CD or DVD playing time to time of day.

SALES CODE RBP—AM & FM STEREO RADIO WITH CASSETTE TAPE PLAYER, CD PLAYER, AND OPTIONAL CD/DVD CHANGER CONTROLS

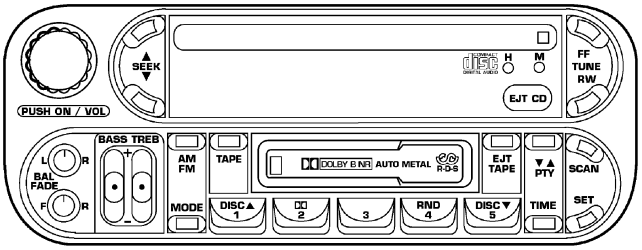

80e7c9a0

Downloaded from www.Manualslib.com manuals search engine

Radio Operation

Power/Volume Control

Press the ON/VOL control to turn the radio on. Turn the volume control to the right to increase the volume.

NOTE: Power to operate the radio is supplied through the ignition switch. It must be in the ON or ACC position to operate the radio.

PTY (Program Type) Button

Pressing this button once will turn on the PTY mode for 5 seconds. If no action is taken during the 5 second time out the PTY icon will turn off. Pressing the PTY button within 5 seconds will allow the program format type to be selected. Many radio stations do not currently broadcast PTY information.

Toggle the PTY button to select the following format types:

Program Type	Radio Display
Adult Hits	Adlt Hit
Classical	Classicl
Classic Rock	Cls Rock
College	College
Country	Country
Information	Inform
Jazz	Jazz
Foreign Language	Language
News	News
Nostalgia	Nostalga
Oldies	Oldies
Personality	Persnlty
Public	Public
Rhythm and Blues	R & B
Religious Music	Rel Musc
Religious Talk	Rel Talk

Downloaded from www.Manualslib.com manuals search engine

Program Type	Radio Display
Rock	Rock
Soft	Soft
Soft Rock	Soft Rck
Soft Rhythm and Blues	Soft R&B
Sports	Sports
Talk	Talk
Top 40	Top 40
Weather	Weather

By pressing the SEEK button when the PTY icon is displayed, the radio will be tuned to the next frequency station with the same selected PTY name. The PTY function only operates when in the FM and Satellite (if equipped) modes.

The radio display will flash "SEEK" and the selected PTY program type when searching for the next PTY station. If no station is found with the selected PTY program type, the radio will return to the last preset station.

If a preset button is activated while in the PTY (Program Type) mode, the PTY mode will be exited and the radio will tune to the preset station.

Pressing PTY, then SCAN will scan the FM Band and stop at all RDS stations that broadcast the station type. Each RDS station will be played for a 5 second scan once around the FM Band and stop at the last station. The PTY icon will then turn off.

Seek

Press and release the SEEK button to search for the next station in either the AM or FM mode. Press the top of the button to seek up and the bottom to seek down. The radio will remain tuned to the new station until you make another selection. Holding the button in will by-pass stations without stopping until you release it.

Downloaded from www.Manualslib.com manuals search engine

Scan
Press and release the SCAN button to search for the next station in either the AM or FM mode. The radio will pause for 5 seconds at each listenable station before continuing to the next. To stop the search, press the SCAN button a second time.

Tune
Press the TUNE control up or down to increase or decrease the frequency. If you press and hold the button, the radio will continue to tune until you release the button. The frequency will be displayed and continuously updated while the button is pressed.

Balance — BAL
The Balance control adjusts the left-to-right speaker balance. Press the BAL button in and it will pop out. Adjust the balance and push the button back in.

Fade
The Fade control provides for balance between the front and rear speakers. Press the FADE button in and it will pop out. Adjust the balance and push the button back in.

Tone Control
The tone controls affect the BASS and TREBLE frequency bands. Each is controlled by a slider control with a detent at the mid position. Moving a control up or down increases or decreases amplification of the band. The mid position provides a balanced output.

AM/FM Selection
Press the AM/FM button to toggle between AM and FM mode. The operating mode will be displayed next to the station frequency. The display will show "ST" when a stereo station is received (FM only).

To Set The Radio Push-Button Memory
When you are receiving a station that you wish to commit to push-button memory, press the SET button.

Downloaded from www.Manualslib.com manuals search engine

SET 1 will now show in the display window. Select the "1–5" button you wish to lock onto this station and press and release that button. If a button is not selected within 5 seconds after pressing the SET button, the station will continue to play but will not be locked into push-button memory.

You may add a second station to each push-button by repeating the above procedure with this exception: Press the SET button twice and SET 2 will show in the display window. Each button can be set for SET 1 and SET 2 in both AM and FM. This allows a total of 10 AM and 10 FM stations to be locked into push-button memory. The stations stored in SET 2 memory can be selected by pressing the push-button twice.

Time

Press the TIME button to change the display between radio frequency and time.

To set the clock, use a ballpoint pen or similar object to press the hour (H) or minute (M) buttons on the radio, The time setting will increase each time you press the button. Press any other button to exit from the clock setting mode.

General Information

This radio complies with Part 15 of FCC rules and with RSS-210 of Industry Canada. Operation is subject to the following conditions:

1. This device may not cause harmful interference,

2. This device must accept any interference received, including interference that may cause undesired operation.

NOTE: Changes or modifications not expressively approved by the party responsible for compliance could void the user's authority to operate the equipment.

Downloaded from www.Manualslib.com manuals search engine

Tape Player Operation

Insert the cassette with the exposed tape side toward the right and the mechanical action of the player will gently pull the cassette into the play position.

NOTE: When subjected to extremely cold temperatures, the tape mechanism may require a few minutes to warm up for proper operation. Sometimes poor playback may be experienced due to a defective cassette tape. Clean and demagnetize the tape heads at least twice a year.

Tape Side — ∇Δ/PTY

Pressing the ∇Δ button during tape mode will cause the other side of the tape to be played. The display will confirm the selected tape play direction. The time is always displayed.

Tape

Press the TAPE button to select the Tape mode.

Seek

Press the SEEK button up for the next selection on the tape and down to return to the beginning of the current selection.

Press the SEEK button up or down to move the track number to skip forward or backward 1 to 7 selections. Press the SEEK button once to move 1 selection, twice to move 2 selections, etc. the display will show the total number of times the SEEK button was pushed. The SEEK function will be cancelled by pressing either the FF/RW or AM/FM button.

Fast Forward — FF

Press the FF button up momentarily to advance the tape in the direction that it is playing. The tape will advance until the button is pressed again or the end of the tape is reached. At the end of the tape, the tape will play in the opposite direction.

Downloaded from www.Manualslib.com manuals search engine

Rewind — RW
Press the RW button down momentarily to reverse the tape direction. The tape will rewind until the button is pressed again or until the beginning of the tape is reached. At the beginning of the tape, the tape will play in the opposite direction.

EJT Tape
Press the EJT TAPE button and the cassette will disengage and eject from the radio.

Metal Tape Selection (70µs)
If a standard 70 µ (metal) tape is inserted into the player, the player will automatically select the correct equalization.

Pinch Roller Release
If ignition power or the radio ON/OFF switch are turned off, the pinch roller will automatically retract to protect the tape from any damage. When power is restored to the tape player, the pinch roller will automatically reengage and the tape will resume play.

Dolby Noise Reduction
The Dolby Noise Reduction System* is on whenever the tape player is on, but may be switched on/off.

To turn the Dolby Noise Reduction System on/off: Press the Dolby NR button (button 2) after you insert the tape. The NR light in the display will go off when the Dolby System is off.

* "Dolby" noise reduction manufactured under license from Dolby Laboratories Licensing Corporation. Dolby and the double-D symbol are trademarks of Dolby Laboratories Licensing Corporation.

Downloaded from www.Manualslib.com manuals search engine

CD Player Operation

NOTE: The ignition switch must be in the ON or ACC position and the volume control ON before the CD player will operate.

Inserting The Compact Disc

You may either insert or eject a disc with the radio OFF.

If you insert a disc with the ignition ON and the radio off, the display will show CD and the time of day will be displayed.

If the power is on, the unit will switch from radio to CD mode and begin to play when you insert the disc. The display will show the track number and index time in minutes and seconds. Play will begin at the start of track 1.

Seek

Press the top of the SEEK button for the next selection on the CD. Press the bottom of the button to return to the beginning of the current selection, or return to the beginning of the previous selection if the CD is within the first second of the current selection.

Scan

Press the SCAN button to play 10 seconds of each selection. Press the SCAN button a second time to cancel this feature.

EJT CD

Press the EJT CD button and the disc will unload and move to the entrance for easy removal. The unit will switch to the radio mode.

If you do not remove the disc within 15 seconds, it will be reloaded. The unit will continue in radio mode.

The disc can be ejected with the radio and ignition off.

Downloaded from www.Manualslib.com manuals search engine

FF/TUNE/RW
Press FF (Fast Forward) and the CD player will begin to fast forward until FF is released. The RW (Reverse) button works in a similar manner.

Random Play — RND/Program Button 4
Press the RND (button 4) button while the CD is playing to activate Random Play. This feature plays the selections on the compact disc in random order to provide an interesting change of pace.

Press the top of the SEEK button to move to the next randomly selected track.

Press the RND (button 4) button a second time to stop Random Play.

MODE
Press the MODE button to select between the CD player, remote CD/DVD changer (if equipped), or satellite radio (if equipped).

To select Satellite Radio (if equipped), press the MODE button until the word SIRIUS™ appears. The following will be displayed in this order: After three seconds, the current channel name and number will be displayed for five seconds. The current program type and channel number will then be displayed for five seconds. The current channel name and number will then be displayed until an action occurs. A CD or tape may remain in the player while in the Satellite Radio mode.

Time
Press the TIME button to change the display from elapsed CD playing time to time of day.

CD/DVD Changer Operation — If Equipped

MODE
Press the MODE button to select between the CD player, and the CD/DVD changer (if equipped).

Downloaded from www.Manualslib.com manuals search engine

Disc Up/Program Button 1
Press the DISC (button 1) button to play the next available disc.

Random Play — RND/Program Button 4
Press the RND (button 4) button while the CD is playing to activate Random Play. This feature plays the selections on the currently playing compact disc in random order to provide an interesting change of pace.

Press the top of the SEEK button to move to the next randomly selected track.

Press the RND (button 4) button a second time to stop Random Play.

FF/RW — TUNE
Press and hold the FF button for fast forward. Press and hold the RW button for fast reverse. The audio output can be heard when fast forward and fast reverse are activated.

Disc Down/Program Button 5
Press the DISC (button 5) button to play the previous disc.

Seek
Press the top of the SEEK button for the next selection on the CD. Press the bottom of the button to return to the beginning of the current selection, or return to the beginning of the previous selection if the CD is within the first second of the current selection.

Time
Press the TIME button to switch between time of day and CD track time.

Scan
Press the SCAN button to play 10 seconds of each track. Press the SCAN button a second time to cancel the feature.

Downloaded from www.Manualslib.com manuals search engine

6 DISC CD/DVD CHANGER (RDV) — IF EQUIPPED

The Rear Seat Audio/Video System allows passengers to listen to a CD or DVD from the 6 disc CD/DVD changer through wireless headphones, while the front seat passengers listen to either AM/FM, Cassette or CDs from the radio speakers. A remote control is provided for functions such as changing tracks or DVD functions, as well as selecting discs loaded in the 6 disc CD/DVD changer while listening to the Rear Audio/Video System.

The Rear Seat Audio/Video System may be available in a base and premium version. The premium version includes a six disc changer, remote control and two sets of wireless headphones. The base version includes a single disc changer and remote control.

The CD/DVD Changer will play CD-R, CD-RW, CD-Audio and DVD Video disc formats.

NOTE: The ignition switch must be in the ON or ACC position before the CD/DVD changer will operate.

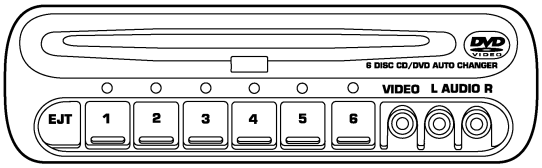

811caacd

Operating Instructions — CD/DVD Changer

Loading The CD/DVD Changer

The premium version has a multi-disc changer, and will accept up to six discs. The base version is a single-disc changer, and will only accept one disc.

4

Downloaded from www.Manualslib.com manuals search engine

To insert disc(s) into the changer, follow the instructions shown:

1. On vehicles equipped with the premium version, select and press any numbered button without an illuminated light above it.

2. Gently insert the disc with the label facing up while the light below the loading slot is illuminated. On vehicles equipped with the premium version the light above the chosen button will also be flashing, indicating which numbered position the disc will be loaded into. The disc will automatically be pulled into the CD/DVD changer.

3. Upon insertion, the disc will begin to play, and the light below the loading slot will turn off. On vehicles equipped with the premium version the light above the chosen button will remain illuminated.

4. Repeat the process for loading any additional CD/DVDs into the premium version multi-disc changer. The CD/DVD changer will stop while additional CD/DVDs are loaded.

If the radio volume control is ON, the unit will switch from radio to CD/DVD mode. If the DVD supports the autoplay feature, play will begin automatically in approximately 10 seconds, after the DVD disc menu is displayed. If the DVD does not play automatically, press the ENTER button on the remote control or on the side of the video screen to select play from the menu options. The radio display will show the chapter number and index time in hours and minutes of the DVD, or the track number, minutes and second of the CD.

NOTE:

- You may eject a disc with the radio OFF.

Downloaded from www.Manualslib.com manuals search engine

- If you insert a disc with the ignition ON and the radio OFF, the DVD will automatically be pulled into the DVD changer and the display will show the time of day.
- It is recommended to label home made burned discs with a permanent marker instead of adhesive labels. These types of labels may become loose and cause the disc to be stuck in the DVD player. This may cause permanent damage to the DVD mechanism.

EJECT (EJT) Button

If there is a disc in the changer, press the EJT button and the disc will eject. If you do not remove the disc within 10 seconds, it will be reloaded and the display will show PAUSE. The radio mode will continue to operate.

To eject additional discs from the premium version multi-disc changer, first select the numbered button where the disc is located and then press the EJT button.

The disc can be ejected with the radio OFF.

Downloaded from www.Manualslib.com manuals search engine

Operating Instructions — Remote Control

NOTE: Aim the remote control at the DVD changer located on the center of the instrument panel and press the desired button. Direct sunlight or objects blocking the line of sight may affect the function of the remote control.

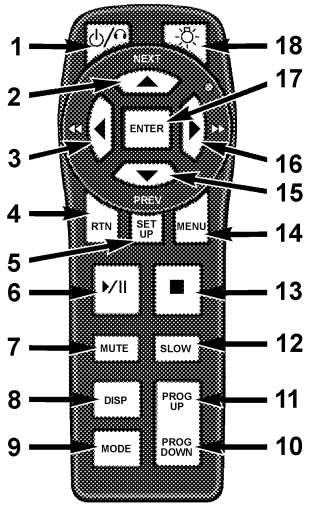

812cd578

Downloaded from www.Manualslib.com manuals search engine

1. Headphone Transmitter
2. Menu Up/Next Track/Chapter
3. Menu Left/Fast Rewind
4. Return
5. Setup
6. Pause/Play
7. Mute
8. Display
9. Mode
10. Program Down - Previous Disc
11. Program Up - Next Disc
12. Slow
13. Stop
14. Menu
15. Menu Down/Previous Track/Chapter
16. Menu Right/Fast Forward
17. Enter
18. Light

Headphone Transmitter Button (1)
After a disc is inserted into the DVD changer, both the headphone transmitter button (1) on the remote control and the power button on the headphones must be turned ON before sound can be heard from the headphones. On some radios the headphone symbol will flash for approximately 5 seconds in the radio display, indicating the headphones are in use.

ARROW Buttons (2, 3, 15, 16)
These buttons only function in DVD video mode. Use the arrow buttons to toggle through the DVD disc menu screen options.

RTN Button (4)
This button only functions in DVD video mode. Press this button to return to the previous menu when in the DVD disc menu mode.

Downloaded from www.Manualslib.com manuals search engine

SETUP Button (5)
This button only functions in DVD video mode. Press the button after pressing the STOP button to access the DVD changer set up menu. Use the right and left arrows to move between tabs for language, rating, mark, audio and aspect. Use the up and down arrows to move between options within each tab.

To change an item highlighted in blue, press ENTER. This should cause the highlight to turn yellow. Again, using the up and down arrows will cause the arrow to move up or down. Once the arrow is on the desired selection, press ENTER. When finished, press setup or play to return to playing the DVD or Menu to return to the DVD disc menu.

PAUSE/PLAY Button (6)
This button only functions in DVD video mode. Press this button once to pause the video, press a second time to play the video.

MUTE Button (7)
No function.

DISP Button (8)
This button only functions in DVD video mode. When a DVD video is playing, press this button to display the play menu options.

MODE Button (9)
No Function

PROG UP/DOWN Buttons (10, 11)
PROG UP selects the next disc loaded in the changer. PROG DOWN selects the previous disc loaded in the changer.

SLOW Button (12)
This button only functions in DVD video mode. Press this button to advance the video. If the DVD is paused, pressing this button will advance the video frame by frame.

Downloaded from www.Manualslib.com manuals search engine

STOP Button (13)
This button only functions in DVD video mode. Press this button to stop the DVD.

MENU Button (14)
This button only functions in DVD video mode. Press this button to select the DVD disc menu.

NEXT/PREV Buttons (2, 15)
Press the up arrow or the NEXT button for the next chapter or track on the disc. Press the down arrow or PREV button to return to the beginning of the current chapter or track. Press the down arrow or PREV button twice within two seconds to return to the previous chapter or track. Each press of the NEXT/PREV button up or down will toggle through the chapters or tracks.

FF/RW Buttons (3, 16)
Press and hold FF (Fast Forward) once and the CD/DVD changer will begin to fast forward until the FF button is released. The RW (Reverse) button works in a similar manner.

ENTER Button (17)
This button only functions in DVD video mode. Use the ENTER button to enter selections from the menu screens. Use the arrow buttons to toggle through the menu screen options.

Light Button (18)
Pressing this button illuminates the buttons on the remote control.

Remote Control Battery Service

- To replace the batteries for the remote control slide the cover rearward.

The replacement batteries for the remote control are two AAA batteries.

Downloaded from www.Manualslib.com manuals search engine

Operating Instructions — Video Screen

Push up on the release button to lower the video screen.

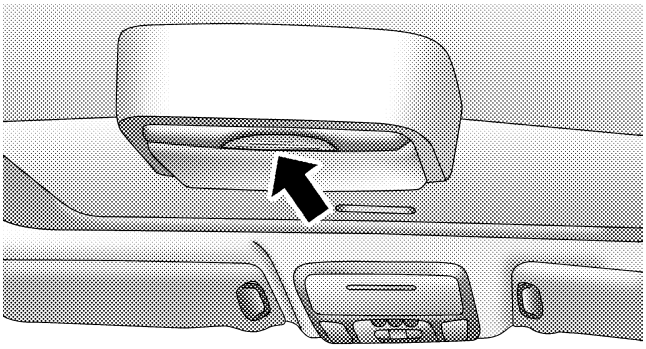

810386a2

1. Screen Width Button

Changes the width of the screen picture.

2. Enter Button

This button will enter the selection from the on-screen menu.

Downloaded from www.Manualslib.com manuals search engine

3. Brightness Button

Changes the brightness of the screen picture.

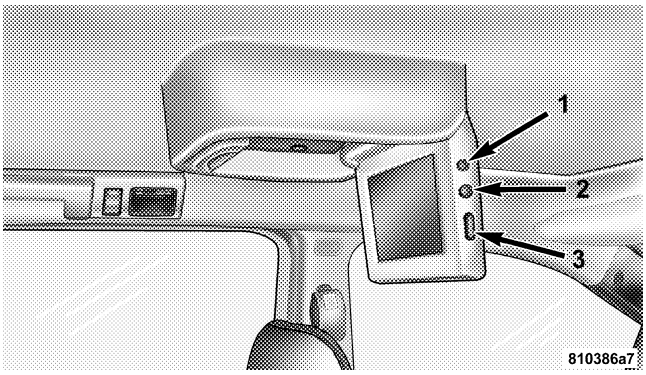

Operating Instructions — Headphones

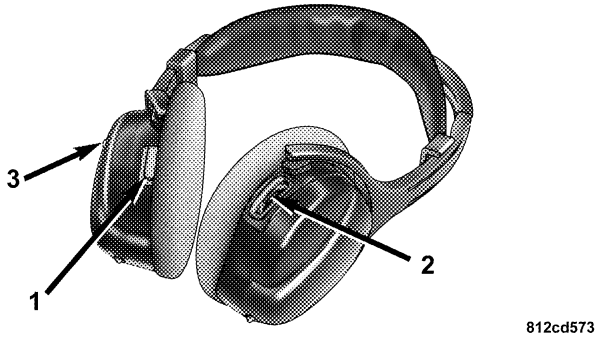

1. Power Button
2. Volume Control
3. Power Indicator

Downloaded from www.Manualslib.com manuals search engine

Power Button

Pressing the power button will turn the headphones ON/OFF. An indicator light will illuminate on the headphone earpiece to indicate the headphones are ON.

NOTE:

- The headphones will turn off automatically in approximately 3 minutes if they lose the signal form the system or when the radio or rear audio/video system is turned off.

Volume Control

Rotate the volume control to adjust the volume to the desired listening level.

Headphone Battery Service

- Press the button at the bottom of each headphone earpiece and lift the cover upward.

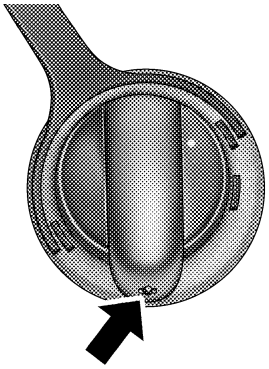

812cd563

- Replace the battery in each earpiece and reinstall the cover. The headphones require two AAA batteries.

Downloaded from www.Manualslib.com manuals search engine

General Information

This device complies with part 15 of the FCC rules and RSS 210 of Industry Canada. Operation is subject to the following two conditions: (1) This device may not cause harmful interference and (2) This device must accept any interference received, including interference that may cause undesired operation.

If you do not hear sound coming from the headphones, check for the following conditions:

1. Rear Seat Audio/Video System and headphones are on. Press the headphone transmitter button (1) on the remote control and the power button on the headphones. An indicator light will illuminate on the headphone earpiece to indicate the headphones are ON.

2. Weak batteries in the headphones.

3. Direct sunlight or objects blocking the line of sight between the headphone transmitter on the video screen and the headphones.

Operating Instructions — MP3 Player, Portable Walkman

An MP3 player can be connected to the audio system. Connect the cables to the RCA jacks located on the front of the CD/DVD changer.

NOTE: Follow the manufactures instructions for the correct colors when connecting the RCA cables.

Operating Instructions — Video Games/Camcorders

A video game unit or camcorder can be connected to the rear audio/video system. Connect the cables to the RCA jacks located on the front of the CD/DVD changer.

NOTE: To operate a video game unit a DC to AC adapter may be required, plug the adapter into any power outlet.

Follow the manufactures instructions for the correct colors when connecting the RCA cables.

Downloaded from www.Manualslib.com manuals search engine

NOTE: MP3 player's, video game systems, camcorders connected to the RCA jacks and CD's or DVD's inserted into the CD/DVD changer can be heard through the headphones.

SATELLITE RADIO — IF EQUIPPED

Satellite radio uses direct satellite to receiver broadcasting technology to provide clear digital sound, coast to coast. The subscription service provider is Sirius™ Satellite Radio. This service offers up to 100 channels of music, sports, news, entertainment, and programming for children, directly from its satellites and broadcasting studios.

System Activation

To activate your Sirius Satellite Radio service, call the toll-free number 888-539-7474, or visit the Sirius web site at www.sirius.com. Please have the following information available when activating your system:

1. The Electronic Serial Number/Sirius Identification Number (ESN/SID).
2. Credit card information.
3. Your Vehicle Identification Number.

Electronic Serial Number/Sirius Identification Number (ENS/SID)

The Electronic Serial Number/Sirius Identification Number is needed to activate your Sirius Satellite Radio system. To access the ESN/SID, refer to the following steps:

ESN/SID Access With RBB, RAH and RBK Radios

With the ignition switch in the ACCESSORY position and the radio OFF, press the Tape Eject or CD Eject (depending on the radio type) and Time buttons simultaneously for 3 seconds. The first four digits of the twelve-digit ESN/SID number will be displayed. Press the SEEK UP button to display the next four digits. Continue to press the SEEK UP button until all twelve ESN/SID digits have been displayed. The SEEK DOWN will page down until the first four digits are displayed. The radio will exit the

Downloaded from www.Manualslib.com manuals search engine

ESN/SID mode when any other button is pushed, the ignition is turned OFF, or 5 minutes has passed since any button was pushed.

ESN/SID Access With RBP, RBU, RAZ, and RBQ Radios

With the ignition switch in the ACCESSORY position and the radio OFF, press the CD Eject and TIME buttons simultaneously for 3 seconds. All twelve ESN/SID numbers will be displayed. The radio will exit the ESN/SID mode when any other button is pushed, the ignition is turned OFF, or 5 minutes has passed since any button was pushed.

Selecting Satellite Mode in RBB, RAH and RBK Radios

Press the MODE button repeatedly until "S A" appears in the display. A CD or tape may remain in the radio while in the Satellite radio mode.

Selecting Satellite Mode in RBP, RBU, RAZ, and RBQ Radios

Press the MODE button repeatedly until the word "SIRIUS" appears in the display. These radios will also display the following:

- After 3 seconds, the current channel name and channel number will be displayed for 5 seconds.
- The current program type and channel number will then be displayed for 5 seconds.
- The current channel number will then be displayed until an action occurs.

A CD or tape may remain in the radio while in the Satellite radio mode.

Downloaded from www.Manualslib.com manuals search engine

Selecting a Channel

Press and release the SEEK or TUNE buttons to search for the next channel. Press the top of the button to search up and the bottom of the button to search down. Holding the TUNE button causes the radio to bypass channels until the button is released.

Press and release the SCAN button (if equipped) to automatically change channels every 7 seconds. The radio will pause on each channel for 7 seconds before moving on to the next channel. The word "SCAN" will appear in the display between each channel change. Press the SCAN button a second time to stop the search.

NOTE: Channels that may contain objectionable content can be blocked. Contact Sirius Customer Care at 888-539-7474 to discuss options for channel blocking or unblocking. Please have your ESN/SID information available.

Storing and Selecting Pre-Set Channels

In addition to the 10 AM and 10 FM pre-set stations, you may also commit 10 satellite stations to push button memory. These satellite channel pre-set stations will not erase any AM or FM pre-set memory stations. Follow the memory pre-set procedures that apply to your radio.

Using the PTY (Program Type) Button (if equipped)

Follow the PTY button instructions that apply to your radio.

PTY Button "SCAN"

When the desired program type is obtained, press the "SCAN" button within five seconds. The radio will play 7 seconds of the selected channel before moving to the next channel of the selected program type. Press the "SCAN" button a second time to stop the search.

Downloaded from www.Manualslib.com manuals search engine

NOTE: Pressing the "SEEK" or "SCAN" button while performing a music type scan will change the channel by one and stop the search. Pressing a pre-set memory button during a music type scan, will call up the memory channel and stop the search.

PTY Button "SEEK"

When the desired program is obtained, press the "SEEK" button within five seconds. The channel will change to the next channel that matches the program type selected.

Satellite Antenna

To ensure optimum reception, do not place items on the roof around the rooftop antenna location. Metal objects placed within the line of sight of the antenna will cause decreased performance. Larger luggage items should be placed as far forward as possible. Do not place items directly on or above the antenna.

Reception Quality

Satellite reception may be interrupted due to one of the following reasons.

- The vehicle is parked in an underground parking structure or under a physical obstacle.
- Dense tree coverage may interrupt reception in the form of short audio mutes.
- Driving under wide bridges or along tall buildings can cause intermittent reception.
- Placing objects over or too close to the antenna can cause signal blockage.

Downloaded from www.Manualslib.com manuals search engine

REMOTE SOUND SYSTEM CONTROLS

The remote sound system controls are located on the rear surface of the steering wheel at the 3 and 9 o'clock positions.

The right hand rocker switch has a push button in the center and controls the volume and mode of the sound system. Pressing the top of the rocker switch will increase the volume and pressing the bottom of the rocker switch will decrease the volume. Pressing the center button changes the operation of the radio from AM to FM to Tape or CD mode depending on which radio is in the vehicle.

The left hand rocker switch has a push button in the center. The function of the left hand switch is different depending on which mode you are in.

The following describes the left hand rocker switch operation in each mode:

Radio Operation

Pressing the top of the switch will SEEK up for the next listenable station and pressing the bottom of the switch will SEEK down for the next listenable station.

The button located in the center of the left hand switch will tune to the next pre-set station that you have programmed in the radio pre-set push-button.

Tape Player

Pressing the top of the switch once will go to the next selection on the cassette. Pressing the bottom of the switch once will go to the beginning of the current selection or to the beginning of the previous selection if it is within the first 5 seconds of the current selection.

If you press the switch up or down twice it plays the second selection, three times, it will play the third, etc.

The button in the center of the left hand switch has no function in this mode.

Downloaded from www.Manualslib.com manuals search engine

CD Player

Pressing the top of the switch once will go to the next track on the CD. Pressing the bottom of the switch once will go to the beginning of the current track or to the beginning of the previous track if it is within one second after the current track begins to play.

If you press the switch up or down twice it plays the second track, three times, it will play the third, etc.

The button in the center of the left hand switch has no function in this mode.

RADIO GENERAL INFORMATION

Radio Broadcast Signals

Your new radio will provide excellent reception under most operating conditions. Like any system, however, car radios have performance limitations, due to mobile operation and natural phenomena, which might lead you to believe your sound system is malfunctioning. To help you understand and save you concern about these "apparent" malfunctions, you must understand a point or two about the transmission and reception of radio signals.

Two Types of Signals

There are two basic types of radio signals... AM or Amplitude Modulation, in which the transmitted sound causes the amplitude, or height, of the radio waves to vary... and FM or Frequency Modulation, in which the frequency of the wave is varied to carry the sound.

Electrical Disturbances

Radio waves may pick up electrical disturbances during transmission. They mainly affect the wave amplitude, and thus remain a part of the AM reception. They interfere very little with the frequency variations that carry the FM signal.

Downloaded from www.Manualslib.com manuals search engine

AM Reception

AM sound is based on wave amplitude, so AM reception can be disrupted by such things as lightning, power lines and neon signs.

FM Reception

Because FM transmission is based on frequency variations, interference that consists of amplitude variations can be filtered out, leaving the reception relatively clear, which is the major feature of FM radio.

NOTE: On vehicles so equipped the radio, steering wheel radio controls and 6 disc CD/DVD changer if equipped, will remain active for up to 45 seconds after the ignition switch has been turned off. Opening a vehicle front door will cancel this feature.

CASSETTE TAPE AND PLAYER MAINTENANCE

To keep the cassette tapes and player in good condition, take the following precautions:

1. Do not use cassette tapes longer than C-90; otherwise, sound quality and tape durability will be greatly diminished.

2. Keep the cassette tape in its case to protect from slackness and dust when it is not in use.

3. Keep the cassette tape away from direct sunlight, heat and magnetic fields such as the radio speakers.

4. Before inserting a tape, make sure that the label is adhering flatly to the cassette.

5. A loose tape should be corrected before use. To rewind a loose tape, insert the eraser end of a pencil into the tape drive gear and twist the pencil in the required directions.

Downloaded from www.Manualslib.com manuals search engine

Maintain your cassette tape player. The head and capstan shaft in the cassette player can pick up dirt or tape deposits each time a cassette is played. The result of deposits on the capstan shaft may cause the tape to wrap around and become lodged in the tape transport. The other adverse condition is low or "muddy" sound from one or both channels, as if the treble tone control were turned all the way down. To prevent this, you should periodically clean the head with a commercially available WET cleaning cassette.

As preventive maintenance, clean the head about every 30 hours of use. If you wait until the head becomes very dirty (noticeably poor sound), it may not be possible to remove all deposits with a simple WET cleaning cassette.

CD/DVD DISC MAINTENANCE

To keep the CD/DVD discs in good condition, take the following precautions:

1. Handle the disc by its edge; avoid touching the surface.

2. If the disc is stained, clean the surface with a soft cloth, wiping from center to edge.

3. Do not apply paper, paper CD labels, or tape to the disc; avoid scratching the disc.

4. Do not use solvents such as benzine, thinner, cleaners, or antistatic sprays.

5. Store the disc in its case after playing.

6. Do not expose the disc to direct sunlight.

7. Do not store the disc where temperatures may become too high.

Downloaded from www.Manualslib.com manuals search engine

RADIO OPERATION AND CELLULAR PHONES

Under certain conditions, the cellular phone being On in your vehicle can cause erratic or noisy performance from your radio. This condition may be lessened or eliminated by relocating the cellular phone antenna. This condition is not harmful to the radio. If your radio performance does not satisfactorily "clear" by the repositioning of the antenna, it is recommended that the radio volume be turned down or off during cellular phone operation.

NAVIGATION SYSTEM — IF EQUIPPED

The navigation system provides maps, turn identification, selection menus and instructions for selecting a variety of destinations and routes. The buttons to operate the system are located on the instrument panel next to the analog clock.

Refer to your Navigation User's Manual for detailed operating instructions.

The navigation DVD unit is located in the underfloor storage compartment in the rear cargo area. A single disc containing map information for the entire United States and parts of Canada is stored in the DVD unit. Updated DVD's are available from your authorized dealer.

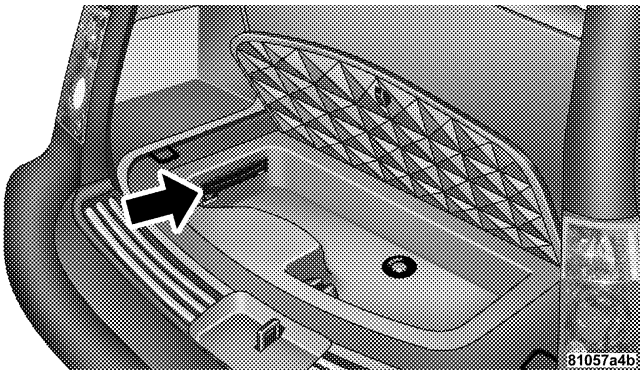

Downloaded from www.Manualslib.com manuals search engine

To replace the navigation map DVD lift the storage bin cover and liner in the rear cargo area, press the eject button and the disc will eject. Gently insert the new disc into the DVD unit with the label facing up. The disc will automatically be pulled into the DVD unit.

CLIMATE CONTROLS

The Air Conditioning and Heating System is designed to make you comfortable in all types of weather.

Dual-Zone Automatic Temperature Control

The Dual Zone Automatic Temperature Control (ATC) System automatically maintains the interior comfort level desired by the driver and front seat passenger. This is accomplished by using two infrared sensors located in the center of the instrument panel. The two infrared sensors independently measure the surface temperature of the driver and front seat passenger. Based on the sensor input, the system automatically adjusts the air temperature, the airflow volume, the airflow distribution, and amount of inside air recirculation to maintain front seat occupant comfort, even under changing outside weather conditions.

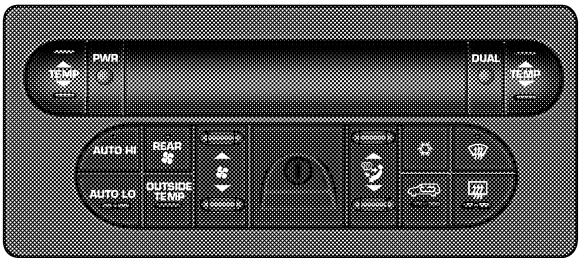

80e550c0

To operate the system, press either the "AUTO HI" or "AUTO LO" buttons. The system now automatically

4

Downloaded from www.Manualslib.com manuals search engine

regulates the heating and air conditioning system including blower speed, outlet air temperature, and airflow distribution through the various outlets within the instrument panel. Using the ″TEMP″ buttons, adjust the temperature you would like the system to maintain. When the system is set to your comfort level, it is not necessary to change the settings. You will experience the greatest efficiency by allowing the system to function automatically. The system will operate fully automatically in either ″AUTO HI″ or ″AUTO LO″. The ″AUTO LO″ setting will limit the maximum fan speed and should be used when more quiet operation is desired. Use the ″AUTO HI″ setting when the quickest cool-down or warm-up performance is desired.

NOTE:

- It is not necessary to move the temperature settings for cold or hot vehicles. The system automatically adjusts the temperature, mode and fan speed to provide comfort as quickly as possible.
- The temperature can be displayed in U.S. or Metric by selecting the US/M customer programmable feature. Refer to the "Electronic Vehicle Information Center-Customer Programmable Features" in Section 3 of this manual.

To provide you with maximum comfort in the automatic mode, during cold start-ups the blower fan will remain off and "DELAY" will appear in the display until the engine warms up. An estimate of the time remaining until the "DELAY" is complete will appear periodically in the display. However, the fan will engage immediately if the defrost mode is selected or by pushing the blower switch and manually adjusting the fan speed.

This feature may be disabled using the following procedure:

- Press and hold the Heated Rear Window and Auto LO buttons for 5 seconds.

Downloaded from www.Manualslib.com manuals search engine

- The "DELAY" symbol will flash to indicate that the feature as been disabled.

This feature may be enabled using the following procedure:

- Press and hold the Heated Rear Window and Auto HI buttons for 5 seconds.
- The "DELAY" symbol will flash to indicate that the feature as been enabled.

Power Button
This button turns the entire system ON/OFF. When the system is turned on it will return to the previous settings.

Dual/Single Zone Operation
When "DUAL" is displayed in the ATC control unit, the driver and passenger air outlet temperatures can be individually adjusted from the two independent "TEMP" buttons. When a front seat passenger is not present, pressing the "DUAL" button will disable the passenger's infrared sensor and control the entire system based only on the driver's temperature setting. The outside temperature will replace the passenger's temperature setting in the display. Pressing the "DUAL" button a second time or adjusting the passenger's "TEMP" button will reactivate the passenger's infrared sensor and return the system to dual independent temperature operation.

Manual Operation
This system offers a full complement of manual override features. The indicator light in both the "AUTO HI" or "AUTO LO" buttons will turn off when the system is being used in the manual mode. The fan speed, airflow distribution, and outside air/recirculated air can be manually adjusted.

NOTE: Each of these features can be operate independently from each other. If any one feature is controlled manually, the remaining features will continue to operate automatically.

Downloaded from www.Manualslib.com manuals search engine

The front blower control can be set to any fixed blower speed by pressing the rocker switch up or down. This allows the front occupants to control the volume of air circulated in the vehicle and cancel the auto mode. The fan will now operate at a fixed speed until additional speeds are selected or until either the "AUTO HI" or "AUTO LO" buttons are pressed. The system will continue to automatically adjust air temperature and airflow distribution.

The operator can also select the direction of the air by pressing the mode control rocker switch located to the left of the A/C button and selecting one of the following positions.

Panel Mode

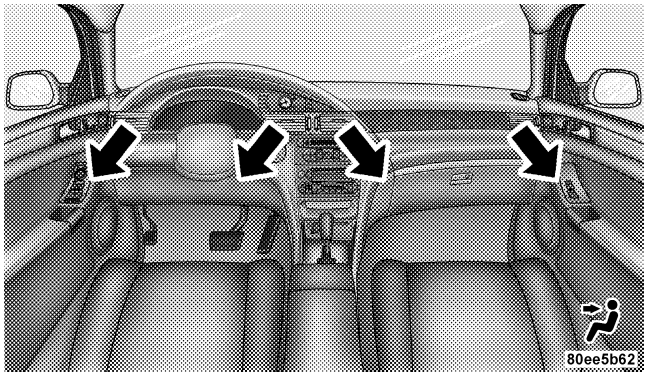

Air comes from the outlets in the instrument panel. Each of these outlets can be individually adjusted to direct the flow of air. Moving the knob up, down, left, or right will direct the air accordingly. The thumbwheel next to each outlet can be rotated to reduce or shut off the air flow from these outlets.

Downloaded from www.Manualslib.com manuals search engine

Bi-Level Mode

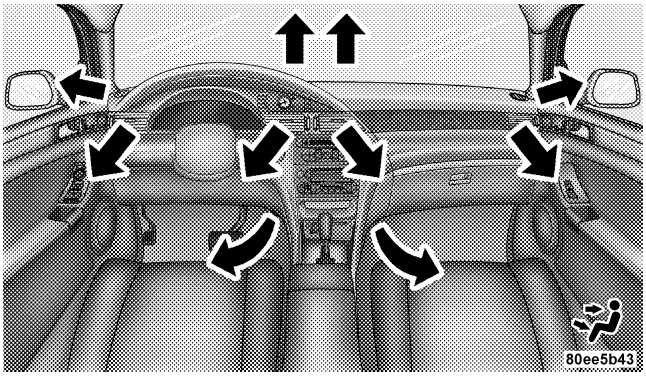

Air comes from both the instrument panel outlets and floor outlets. A slight amount of air is also directed through the defrost and side window demister outlets.

NOTE: In many temperature positions, the bi-level mode is designed to provide cooler air out of the panel outlets and warmer air from the floor outlets.

Floor Mode

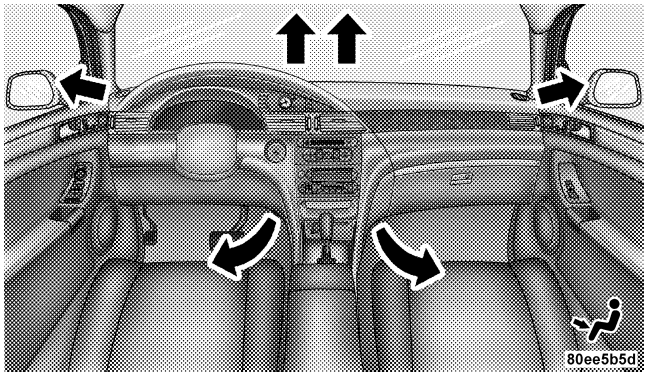

Air comes from the floor outlets. A slight amount of air is directed through the defrost and side window demister outlets.

Downloaded from www.Manualslib.com manuals search engine

Mix Mode

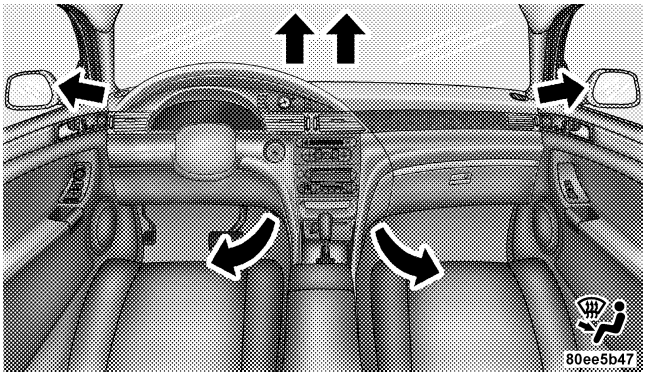

Air comes from the floor, defrost and side window demist outlets. This mode is not used when operating in either "AUTO HI" or "AUTO LO". This mode should be used when airflow to the floor and windshield is desired.

Defrost Mode

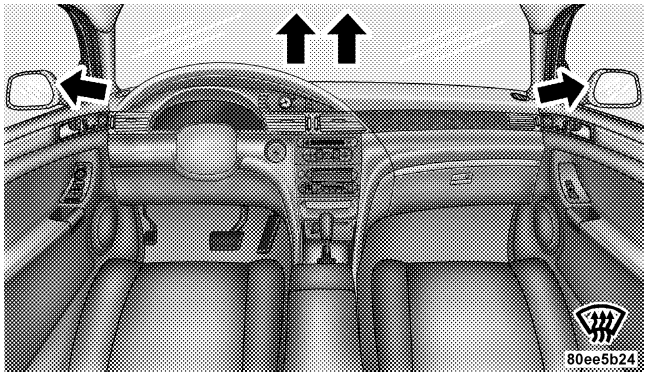

Air comes from the windshield and side window demist outlets. Use this setting when necessary to defrost your windshield and side windows. If a fog or mist on the windshield or side glass starts to impair visibility, press the front blower button and increase the fan speed to maximum.

Downloaded from www.Manualslib.com manuals search engine

NOTE: While operating in "AUTO HI" or "AUTO LO", the system will not automatically sense the presence fog, mist, or ice on the windshield. The defrost button must be pressed to clear the windshield and side glass.

Depress the "A/C" button to turn on and off the air conditioning during manual operation only. Cool dehumidified air comes through the outlets selected by the Mode Control. To turn off the air conditioning, press the A/C button a second time. The A/C symbol in the display will turn off.

NOTE: If a fog or mist appears on the windshield or side glass, press the "A/C" button to engage the compressor or press the defrost button. If a fog or mist on the windshield or side glass starts to impair visibility, press the front blower button and increase the fan speed to maximum.

Recirculation Control

When the outside air contains smoke, odors, high humidity, or if rapid cooling is desired you may wish to recirculate interior air by pressing the recirculation button. The recirculation mode should only be used temporarily. The recirculate symbol will illuminate in the display when this button is selected. Push the button a second time to allow outside air into the vehicle.

NOTE: In cold weather, use of the recirculation mode may lead to excessive window fogging. The recirculation mode is not allowed in the Mix and Defrost modes to improve window clearing operation. Recirculation will be disabled automatically if these modes are selected.

A/C Recirculation Programming

The recirculation control is programmed to cancel the recirculation mode when the ignition key is turned OFF and will reset to the outside air mode when the ignition

Downloaded from www.Manualslib.com manuals search engine

key is turned "ON". The frequent use of outside air will help keep odors from building up within the air conditioner-heater housing. It is recommended that the recirculation mode be used as little as possible, especially in humid climates.

For hot and dry climates, or people who are allergic to pollen and find frequent use of the recirculation mode necessary, the recirculation mode can be programmed to not automatically reset to the outside mode by using the following procedures:

- Turn the ignition switch to the OFF position.
- Press and hold the recirculation button.
- While holding the recirculation button, turn the ignition switch to the "RUN" position.
- Continue holding the recirculation button for 4 seconds, then release.

The recirculation control is now programmed so that the recirculation mode will **not** reset to the outside air mode when the engine is restarted. The recirculation programming can be changed back by repeating this procedure.

Rear Fan Operation

To operate the rear fan, press the ″REAR″ button. The first time this button is pressed the ″REAR AUTO″ display will illuminate indicating that the rear fan speed is automatically controlled. To manually control the rear fan speed, press the ″REAR″ button again and only ″REAR″ will illuminate in the display. This allows the rear seat occupants to control the rear fan speed using the switch located in the center console between the second row seats. By pressing the ″REAR″ button a third time, the rear fan will shut off.

Downloaded from www.Manualslib.com manuals search engine

When the ATC display reads ″REAR AUTO″ or when the rear fan is off, the switch located in the center console between the second row seats is not functional. When the ATC display reads ″REAR″, only the rear seat occupants can control the rear fan speed from the rear switch. When in the "REAR" mode, the rear occupants can set the rear switch to any fan speed including ″OFF″, or ″AUTO″. While in the ″AUTO″ position, the rear fan speed will be automatically controlled.

Summer Operation

The engine cooling system in air conditioned vehicles must be protected with a high-quality antifreeze coolant to provide proper corrosion protection and to protect against engine overheating. A 50% solution of ethylene glycol antifreeze coolant in water is recommended. Refer to section 7, Maintenance Procedures, of this manual for proper coolant selection.

Winter Operation

To insure the best possible heater and defroster performance, make sure the engine cooling system is functioning properly and the proper amount, type, and concentration of coolant is used. Refer to section 7, Maintenance Procedures, of this manual for proper coolant selection. Use of the air Recirculation mode during winter months is not recommended because it may cause window fogging.

Vacation Storage

Anytime you store your vehicle, or keep it out of service (i.e. vacation) for two weeks or more, run the air conditioning system at idle for about five minutes in the fresh air and high blower setting. This will insure adequate system lubrication to minimize the possibility of compressor damage when the system is started again.

Downloaded from www.Manualslib.com manuals search engine

Window Fogging
Vehicle windows tend to fog on the inside in mild rainy or humid weather. To clear the windows, use the A/C button to reduce the humidity inside the vehicle.

Fogging on the inside of the windshield can be quickly removed by pressing the defrost button and increasing the blower speed.

Do not use the Recirculation mode without the A/C button for long periods as fogging may occur.

Outside Air Intake
Before driving, always make sure the air intake located directly in front of the windshield is free of obstructions such as leaves, ice, or snow, which could reduce airflow and/or plug the water drain tube inside the plenum.

A/C Air Filter
The climate control system filters out dust, pollen and some odors from the air. Strong odors can not be totally filtered out. Refer to section 7 "Air Conditioning" for filter replacement instructions.

Outside Temperature Display
The outside temperature can be shown in the ATC display by pressing the "OUTSIDE TEMP" button. After pressing this button, the front seat passenger's temperature setting display will be replaced with the current outside temperature. Press the "OUTSIDE TEMP" button again or press the passenger's "TEMP" button to return the display to the passenger's temperature setting.

Downloaded from www.Manualslib.com manuals search engine

Electric Rear Window Defroster

Press this button to turn on the rear window defroster and the heated side mirrors. A light in the button will illuminate to indicate the rear window defroster is ON. The defroster automatically turns off after about 10 minutes of operation.

CAUTION!

To avoid damaging the electrical conductors of the rear window defroster, do not use scrapers, sharp instruments, or abrasive window cleaners on the interior surface of the window.

Labels can be peeled off after soaking with warm water.

Downloaded from www.Manualslib.com manuals search engine

Downloaded from www.Manualslib.com manuals search engine

STARTING AND OPERATING

CONTENTS

- Starting Procedures 210
  - Normal Starting 210
- Engine Block Heater — If Equipped 212
- Automatic Transmission 213
  - Brake/Transmission Interlock System 213
  - Automatic Transmission Ignition Interlock System 214
  - Four Speed Automatic Transmission 214
- AutoStick 216
  - AutoStick Operation 216
  - AutoStick General Information 216
- All Wheel Drive — If Equipped 217
- Parking Brake 218
- Brake System 219
  - Anti-Lock Brake System 220
- Power Steering 222
- Traction Control — If Equipped 223
- Tire Safety Information 224

Downloaded from www.Manualslib.com manuals search engine

- Tire Markings 224
- Tire Identification Number (TIN) 228
- Tire Loading And Tire Pressure 229

■ Tires—General Information 233
- Tire Pressure 233
- Tire Inflation Pressures 234
- Radial-Ply Tires 237
- Compact Spare Tire — If Equipped 237
- Limited Use Spare — If Equipped 238
- Tire Spinning 239
- Tread Wear Indicators 240
- Replacement Tires 240
- Alignment And Balance 241

■ All Wheel Drive (AWD) — If Equipped 242

■ Tire Pressure Monitor System — If Equipped . . . 242
- 1,2,3, Or 4 Tire(s) Low Pressure 243
- 1,2,3, Or 4 Tire(s) High Pressure 243
- Service Tire Pressure System/See Owner's Manual 243
- Tire Pressure Unavailable 243
- General Information 245

■ Tire Chains 245

■ Snow Tires 246

■ Tire Rotation Recommendations 247

■ Fuel Requirements 248
- Reformulated Gasoline 248

Downloaded from www.Manualslib.com manuals search engine

□ Gasoline/Oxygenate Blends 249
□ MMT In Gasoline 249
□ Sulfur In Gasoline 250
□ Materials Added To Fuel 250
□ Fuel System Cautions 251
□ Carbon Monoxide Warnings 251
■ Adding Fuel 252
□ Fuel Filler Cap (Gas Cap) 252
■ Vehicle Loading 254
□ Vehicle Certification Label 254
□ Gross Vehicle Weight Rating (GVWR) 254
□ Gross Axle Weight Rating (GAWR) 254
□ Overloading 255
□ Loading 255
■ Trailer Towing 256
□ Warranty Requirements 257

Downloaded from www.Manualslib.com manuals search engine

STARTING PROCEDURES

CAUTION!

Long periods of engine idling, especially at high engine speeds, can cause excessive exhaust temperatures which can damage your vehicle. Do not leave your vehicle unattended with the engine running.

WARNING!

Do not leave animals or children inside parked vehicles in hot weather; interior heat build up may cause serious injury or death.

The gear selector must be in the NEUTRAL or PARK position before you can start the engine. Apply the brakes before shifting into any driving gear.

Normal Starting

Normal Starting of either a cold or a warm engine is obtained without pumping or depressing the accelerator pedal. Turn the key to the "START" position and release when the engine starts. If the engine has not started within 3 seconds, slightly depress the accelerator pedal while continuing to crank. If the engine fails to start within 15 seconds, turn the key to the "OFF" position, wait 10 to 15 seconds, then repeat the normal starting procedure.

Extremely Cold Weather (below −29°C or −20°F) To insure reliable starting at these temperatures, use of an externally powered electric engine block heater (available from your dealer) is recommended.

Downloaded from www.Manualslib.com manuals search engine

WARNING!

- **Do not attempt to push or tow your vehicle to get it started. Vehicles equipped with an automatic transmission cannot be started this way. Unburned fuel could enter the catalytic converter and once the engine has started, ignite and damage the converter and vehicle. If the vehicle has a discharged battery, booster cables may be used to obtain a start from a booster battery or the battery in another vehicle. This type of start can be dangerous if done improperly. See section 6 of this manual for the proper jump starting procedures and follow them carefully.**
- **Never pour fuel or other flammable liquid into the throttle body air inlet opening in an attempt to start the vehicle. This could result in flash fire causing serious personal injury.**

If Engine Fails to Start

If the engine fails to start after you have followed the "NORMAL STARTING" procedure, it may be flooded. Push the accelerator pedal all the way to the floor and hold it there while cranking the engine. This should clear any excess fuel in case the engine is flooded.

CAUTION!

To prevent damage to the starter, do not crank the engine for more than 15 seconds at a time. Wait 10 to 15 seconds before trying again.

If the engine has been flooded, it may start to run, but not have enough power to continue running when the key is released. If this occurs, continue cranking up to 15 seconds with the accelerator pedal pushed all the way to the floor. Release the accelerator pedal and the key once the engine is running smoothly. Do not overspeed engine.

Downloaded from www.Manualslib.com manuals search engine

If the engine shows no sign of starting after two 15 second periods of cranking with the accelerator pedal held to the floor, the "NORMAL STARTING" procedure should be repeated.

After Starting

The idle speed will automatically decrease as the engine warms up.

ENGINE BLOCK HEATER — IF EQUIPPED

The engine block heater warms engine coolant and permits quicker starts in cold weather. Connect the cord to a standard 110-115 volt AC electrical outlet with a grounded, three-wire extension cord.

The engine block heater cord is routed under the hood on the driver side of the vehicle. It has a removable cap that is located on the driver side of the Integrated Power Module.

WARNING!

Remember to disconnect the cord before driving. Damage to the 110-115 volt electrical cord could cause electrocution.

Downloaded from www.Manualslib.com manuals search engine

AUTOMATIC TRANSMISSION

CAUTION!

Damage to the transmission may occur if the following precautions are not observed:

- **Shift into PARK only after the vehicle has come to a complete stop.**
- **Shift into or out of REVERSE only after the vehicle has come to a complete stop and the engine is at idle speed.**
- **Do not shift from REVERSE, PARK, or NEUTRAL into any forward gear when the engine is above idle speed.**
- **Before shifting into any gear, make sure your foot is firmly on the brake pedal.**

WARNING!

It is dangerous to shift the selector lever out of "P" or "N" if the engine speed is higher than idle speed. If your foot is not firmly on the brake pedal, the vehicle could accelerate quickly forward or in reverse. You could lose control of the vehicle and hit someone or something. Only shift into gear when the engine is idling normally and when your right foot is firmly on the brake pedal.

Brake/Transmission Interlock System

This system prevents you from moving the gear shift out of PARK and into any gear unless the brake pedal is pressed. This system is active only while the ignition switch is in the ACCESSORY or ON position. Always depress the **brake pedal first,** before moving the gear selector out of PARK.

Downloaded from www.Manualslib.com manuals search engine

Automatic Transmission Ignition Interlock System

This system prevents the key from being removed unless the shift lever is in PARK. It also prevents shifting out of PARK unless the key is in the ACCESSORY or ON position.

NOTE: If a malfunction occurs, the system will trap the key in the ignition cylinder to warn you that this safety feature is inoperable. The engine can be started and stopped but the key cannot be removed until you obtain service.

Four Speed Automatic Transmission

The electronically controlled transmission provides a precise shift schedule. The transmission electronics are self-calibrating; therefore, the first few shifts on a new vehicle, may be somewhat abrupt. This is a normal condition, and precision shifts will develop within a few hundred miles.

Reset Mode - Electronic Transmission

The transmission is monitored electronically for abnormal conditions. If a condition is detected that could cause damage, the transmission automatically shifts into second gear. The transmission remains in second gear despite the forward gear selected. Park (P), Reverse (R), and Neutral (N) will continue to operate. This Reset feature allows the vehicle to be driven to a dealer for service without damaging the transmission.

In the event that the problem has been momentary, the transmission can be reset to regain all forward gears.

- Stop the vehicle and shift into Park (P).
- Turn the key to OFF then restart the engine.
- Shift into the desired range and resume driving.

Downloaded from www.Manualslib.com manuals search engine

NOTE: Even if the transmission can be reset, it is recommended that you visit a dealer at your earliest possible convenience. Your dealer has diagnostic equipment to determine if the problem could recur.

If the transmission cannot be reset, dealer service is required.

Gear Ranges

DO NOT race the engine when shifting from PARK or NEUTRAL positions into another gear range.

"P" Park

Supplements the parking brake by locking the transmission. The engine can be started in this range. Never attempt to use PARK while vehicle is in motion.

Apply parking brake when leaving vehicle in this range.

"R" Reverse

Shift into this range only after the vehicle has come to a complete stop.

"N" Neutral

Engine may be started in this range.

"D" Overdrive

To be used for most city and highway driving, it provides smoothest upshifts and downshifts and best fuel economy. When frequent transmission shifting occurs while using the "D" Overdrive position, such as when operating the vehicle under heavy loading conditions, (i.e. in hilly terrain, traveling into strong head winds or while towing heavy trailers), use the AutoStick mode and select the "3" range.

NOTE: Using the "3" range in the AutoStick mode while operating the vehicle under heavy operating conditions will improve performance and extend transmission life by reducing excessive shifting and heat build up.

Downloaded from www.Manualslib.com manuals search engine

AUTOSTICK

Autostick is a driver-interactive transmission that offers manual gear shifting capability to provide you with more control. Autostick allows you to maximize engine braking, eliminate undesirable upshifts and downshifts, and improve overall vehicle performance. This system can also provide you with more control during passing, city driving, cold slippery conditions, mountain driving, trailer towing, and many other situations.

Autostick Operation

The Autostick position is just below the Overdrive position and is identified by the word "AUTOSTICK". When you place the shift lever in the Autostick position, it can be moved from side to side. Moving the lever to the left (-) triggers a downshift and to the right (+) an upshift. The gear position will be shown in the transmission gear display, located in the instrument cluster.

You can shift in or out of the autostick mode at any time without taking your foot off the accelerator pedal. If you choose the Overdrive mode, the transmission will operate automatically; shifting between the four available gears. When you wish to engage autostick, simply move the shift lever to the AUTOSTICK position. The transmission will remain in the current gear until an upshift or downshift is chosen.

Move the lever back to the Overdrive position to shift out of the Autostick mode.

Autostick General Information

- The transmission will automatically upshift from first to second gear and from second to third gear when engine speed reaches about 6300 RPM.
- Downshifts from third to second gear above 74 mph (119 km/h) and from second to first gear above 41 mph (66 km/h) will be ignored.

Downloaded from www.Manualslib.com manuals search engine

- You can start out in first, second, or third gear. Shifting into fourth gear can occur only after vehicle speed reaches 15 mph (24 km/h).
- The transmission will automatically downshift to first gear when coming to a stop.
- Starting out in third gear is helpful in snowy or icy conditions.
- While in the Autostick mode, Speed Control will only function in third or fourth gear.

  Downshifting out of third gear will turn off the speed control.
- If the system detects powertrain overheating, the transmission will revert to the automatic shift mode and remain in that mode until the powertrain cools off.
- If the system detects a problem it will disable the Autostick mode and the transmission will return to the automatic mode until the problem is corrected.

ALL WHEEL DRIVE — IF EQUIPPED

This feature provides full time, on-demand, All Wheel Drive (AWD). The system is automatic with no driver inputs or additional driving skills required. Under normal driving conditions, the front wheels provide most of the traction. If the front wheels begin to lose traction, power is shifted automatically to the rear wheels. The greater the front wheel traction loss, the greater the power transfer to the rear wheels.

Downloaded from www.Manualslib.com manuals search engine

CAUTION!

All wheels must have the same size and type tires. Unequal tire sizes must not be used. Unequal tire size may cause failure of the power transfer unit and/or the viscous coupling.

PARKING BRAKE

When the parking brake is applied with the ignition switch on, the brake light in the instrument cluster will turn on.

NOTE: This light only shows that the parking brake is applied. It does not show the degree of brake application.

Before leaving the vehicle, make sure that the parking brake is fully applied and place the gear selector in the Park position. To release the parking brake, pull out on the parking brake release located on the left side of the instrument panel.

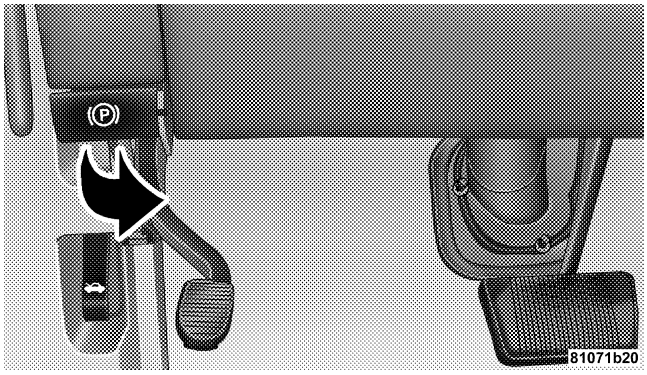

When parking on a hill, it is important to set the parking brake before placing the gear selector in Park, otherwise the load on the transmission locking mechanism may make it difficult to move the selector out of park. As an added precaution, turn the front wheels toward the curb on a downhill grade and away from the curb on a uphill grade.

Downloaded from www.Manualslib.com manuals search engine

The parking brake should always be applied when the driver is not in the vehicle.

WARNING!

- **Leaving children in a vehicle unattended is dangerous for a number of reasons. A child or others could be injured. Children should be warned not to touch the parking brake, brake pedal or the gear selector lever. Don't leave the keys in the ignition. A child could operate power windows, other controls, or move the vehicle.**
- **Be sure the parking brake is fully disengaged before driving: failure to do so can lead to brake failure, and an accident.**

BRAKE SYSTEM

In the event power assist is lost for any reason (for example, repeated brake applications with the engine off), the brakes will still function. The effort required to brake the vehicle will be much greater than that required with the power system operating.

Your vehicle is equipped with dual hydraulic brake systems. If either of the two hydraulic systems lose normal capability, the remaining system will still function. There will be some loss of overall braking effectiveness. This may be evident by increased pedal travel during application, greater pedal force required to slow or stop, and potential activation of the Brake Warning Lamp.

Downloaded from www.Manualslib.com manuals search engine

Anti-Lock Brake System

The Anti-Lock Brake System provides increased vehicle stability and brake performance under most braking conditions. The system automatically "pumps" the brakes during severe braking conditions to prevent wheel lock-up.

WARNING!

Pumping of the Anti-Lock Brakes will diminish their effectiveness and may lead to an accident. Pumping makes the stopping distance longer. Just press firmly on your brake pedal when you need to slow down or stop.

WARNING!

- **Anti-lock system (ABS) cannot prevent the natural laws of physics from acting on the vehicle, nor can it increase braking or steering efficiency beyond that afforded by the condition of the vehicle brakes and tires or the traction afforded.**
- **The ABS cannot prevent accidents, including those resulting from excessive speed in turns, following another vehicle too closely, or hydroplaning. Only a safe, attentive, and skillful driver can prevent accidents.**
- **The capabilities of an ABS equipped vehicle must never be exploited in a reckless or dangerous manner which could jeopardize the user's safety or the safety of others.**

Downloaded from www.Manualslib.com manuals search engine

The ABS light monitors the Anti-Lock Brake System. The light will come on when the ignition switch is turned to the ON position and may stay on for as long as four seconds.

If the ABS light remains on or comes on while driving, it indicates that the Anti-Lock portion of the brake system is not functioning and that service is required. However, the conventional brake system will continue to operate normally if the BRAKE warning light is not on.

If the ABS light is on, the brake system should be serviced as soon as possible to restore the benefits of Anti-Lock brakes. If the ABS light does not come on when the Ignition switch is turned to the ON position, have the bulb repaired as soon as possible.

If both the Brake Warning Light and the ABS Light remain on, the Anti-Lock brakes (ABS) and Electronic Brake Force Distribution (EBD) systems are not functioning. Immediate repair to the ABS system is required.

When the vehicle is driven over 7 mph (11 km/h), you may also hear a slight clicking sound as well as some related motor noises. These noises are the system performing its self check cycle to ensure that the ABS system is working properly. This self check occurs each time the vehicle is started and accelerated past 7 mph (11 km/h).

ABS is activated during braking under certain road or stopping conditions. ABS-inducing conditions can include ice, snow, gravel, bumps, railroad tracks, loose debris, or panic stops.

You also may experience the following when the brake system goes into Anti-lock:

- The ABS motor running (it may continue to run for a short time after the stop),
- the clicking sound of solenoid valves,
- brake pedal pulsations,

Downloaded from www.Manualslib.com manuals search engine

- and a slight drop or fall away of the brake pedal at the end of the stop.

These are all normal characteristics of ABS.

WARNING!

The Anti-Lock Brake System contains sophisticated electronic equipment that may be susceptible to interference caused by improperly installed or high output radio transmitting equipment. This interference can cause possible loss of anti-lock braking capability. Installation of such equipment should be performed by qualified professionals.

All vehicle wheels and tires must be the same size and type and tires must be properly inflated to produce accurate signals for the computer.

POWER STEERING

The standard power steering system will give you good vehicle response and increased ease of maneuverability in tight spaces. The system will provide mechanical steering capability if power assist is lost.

If for some reason, the power assist is interrupted, it will still be possible to steer your vehicle. Under these conditions you will observe a substantial increase in steering effort, especially at very low vehicle speeds and during parking maneuvers.

NOTE: Increased noise levels at the end of the steering wheel travel are considered normal and does not indicate that there is a problem with the power steering system.

WARNING!

Continued operation with reduced power steering assist could pose a safety risk to yourself and others. Service should be obtained as soon as possible.

Downloaded from www.Manualslib.com manuals search engine

CAUTION!

Prolong operation of the steering system at the end of the steering wheel travel will increase the steering fluid temperature and should be avoided when possible. Damage to the power steering pump may occur.

TRACTION CONTROL — IF EQUIPPED

The Traction Control System reduces wheel slip and maintains traction at the driving (front) wheels. The system reduces wheel slip by engaging the brake on the wheel that is losing traction (spinning). The system will operate at speeds below 35 mph (56 km/h).

The system is always in the "stand by" mode unless,

- The Traction Control Switch has been used to turn the system OFF

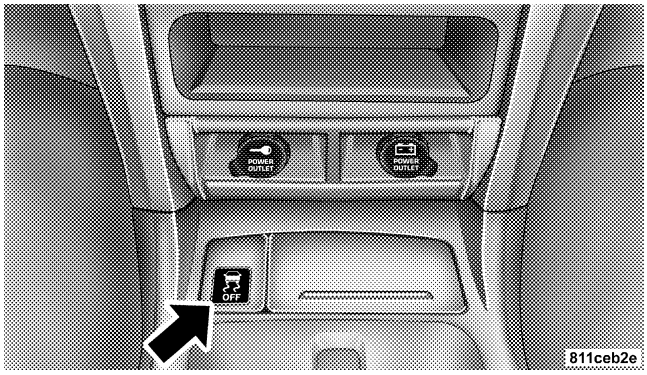

- There is a Traction Control System malfunction
- The system has been deactivated to prevent damage to the brake system due to overheated brake temperatures

5

Downloaded from www.Manualslib.com manuals search engine

NOTE:

- The Traction Control system will make buzzing or clicking sounds when in operation.
- Extended heavy use of Traction Control may cause the system to deactivate and turn on the traction control indicator located in the instrument cluster.

  This is to prevent overheating of the brake system and is a normal condition. The system will remain disabled for about 4 minutes until the brakes have cooled. The system will automatically reactivate and turn off the traction control indicator.

  - If your vehicle becomes stuck in mud, ice, or snow, turn the Traction Control System OFF before attempting to "rock" the vehicle free.

TIRE SAFETY INFORMATION

Tire Markings

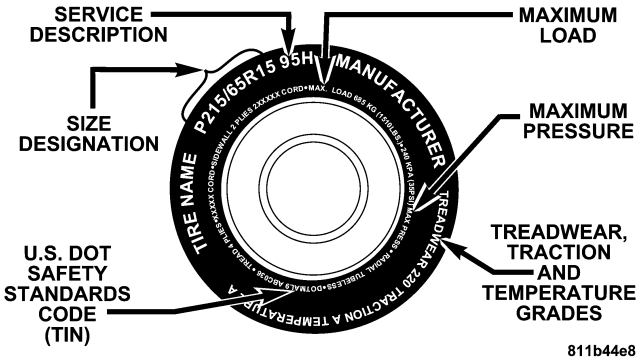

Downloaded from www.Manualslib.com manuals search engine

NOTE:

- P(Passenger)-Metric tire sizing is based on U.S. design standards. P-Metric tires have the letter "P" molded into the sidewall preceding the size designation. Example: P215/65R15 95H.
- European Metric tire sizing is based on European design standards. Tires designed to this standard have the tire size molded into the sidewall beginning with the section width. The letter "P" is absent from this tire size designation. Example: 215/65R15 96H
- LT(Light Truck)-Metric tire sizing is based on U.S. design standards. The size designation for LT-Metric tires is the same as for P-Metric tires except for the letters "LT" that are molded into the sidewall preceding the size designation. Example: LT235/85R16.
- Temporary Spare tires are high pressure compact spares designed for temporary emergency use only. Tires designed to this standard have the letter "T" molded into the sidewall preceding the size designation. Example: T145/80D18 103M.
- High Flotation tire sizing is based on U.S. design standards and begins with the tire diameter molded into the sidewall. Example: 31x10.5 R15 LT.

Downloaded from www.Manualslib.com manuals search engine

Tire Sizing Chart

EXAMPLE:
Size Designation: **P = Passenger car tire size based on U.S. design standards** **″....blank....″ = Passenger car tire based on European design standards** **LT = Light Truck tire based on U.S. design standards** **T = Temporary Spare tire** **31 = Overall Diameter in Inches (in)**
215 = Section Width in Milimeters (mm)
65 = Aspect Ratio in Percent (%) —Ratio of section height to section width of tire. **10.5 = Section Width in Inches (in)**
R = Construction Code —″R″ means Radial Construction. —″D″ means Diagonal or Bias Construction.
15 = Rim Diameter in Inches (in)

Downloaded from www.Manualslib.com manuals search engine

EXAMPLE:
Service Description:
95 = Load Index —A numerical code associated with the maximum load a tire can carry.
H = Speed Symbol —A symbol indicating the range of speeds at which a tire can carry a load corresponding to its load index under certain operating conditions. —The maximum speed corresponding to the Speed Symbol should only be achieved under specified operating conditions. (ie. tire pressure, vehicle loading, road conditions and posted speed limits).
Load Identification:
"....blank...." = Absence of any text on sidewall of the tire indicates a Standard Load (SL) Tire
Extra Load (XL) = Extra Load (or Reinforced) Tire
Light Load = Light Load Tire
C,D,E = Load range associated with the maximum load a tire can carry at a specified pressure
Maximum Load — Maximum Load indicates the maximum load this tire is designed to carry.
Maximum Pressure — Maximum Pressure indicates the maximum permissible cold tire inflation pressure for this tire.

Downloaded from www.Manualslib.com manuals search engine

Tire Identification Number (TIN)

The TIN may be found on one or both sides of the tire however the date code may only be on one side. Tires with white sidewalls will have the full TIN including date code located on the white sidewall side of the tire. Look for the TIN on the outboard side of black sidewall tires as mounted on the vehicle. If the TIN is not found on the outboard side then you will find it on the inboard side of the tire.

EXAMPLE:
DOT MA L9 ABCD 0301
DOT = Department of Transportation —This symbol certifies that the tire is in compliance with the U.S. Department of Transportation tire safety standards, and is approved for highway use.
MA = Code representing the tire manufacturing location.(2 digits)
L9 = Code representing the tire size.(2 digits)
ABCD = Code used by tire manufacturer.(1 to 4 digits)
03 = Number representing the week in which the tire was manufactured.(2 digits) —03 means the 3rd week.
01 = Number representing the year in which the tire was manufactured.(2 digits) —01 means the year 2001. —Prior to July 2000, tire manufacturers were only required to have 1 number to represent the year in which the tire was manufactured. Example: 031 could represent the 3rd week of 1981 or 1991.

Downloaded from www.Manualslib.com manuals search engine

Tire Loading and Tire Pressure

Tire Placard Location

NOTE: Some vehicles have a "Tire and Loading Information" placard located on the driver's side "B" pillar.

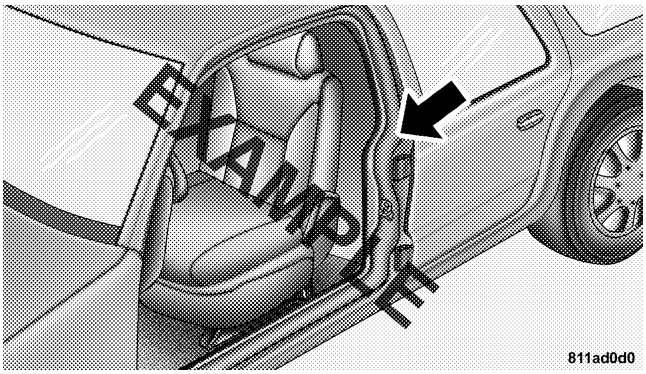

Tire and Loading Information Placard

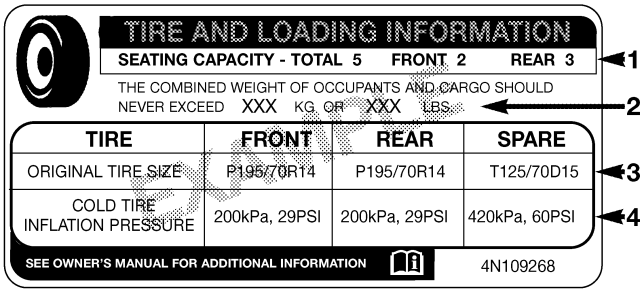

811b5a9a

This placard tells you important information about the,

1) number of people that can be carried in the vehicle
2) the total weight your vehicle can carry
3) the tire size designed for your vehicle

5

Downloaded from www.Manualslib.com manuals search engine

4) the cold tire inflation pressures for the front, rear and spare tires.

Loading

The vehicle maximum load on the tire must not exceed the load carrying capacity of the tire on your vehicle. You will not exceed the tire's load carrying capacity if you adhere to the loading conditions, tire size and cold tire inflation pressures specified on the Tire and Loading Information placard and the Vehicle Loading section of this manual.

NOTE: Under a maximum loaded vehicle condition, gross axle weight ratings (GAWR's) for the front and rear axles must not be exceeded. For further information on GAWR's, vehicle loading and trailer towing, see the Vehicle Loading section of this manual.

To determine the maximum loading conditions of your vehicle, locate the statement "The combined weight of occupants and cargo should never exceed XXX kg or XXX lbs." on the Tire and Loading Information placard. The combined weight of occupants, cargo/luggage and trailer tongue weight (if applicable) should never exceed the weight referenced here.

Steps for Determining Correct Load Limit

1. Locate the statement "The combined weight of occupants and cargo should never exceed XXX pounds" on your vehicle's placard.

2. Determine the combined weight of the driver and passengers that will be riding in your vehicle.

3. Subtract the combined weight of the driver and passengers from XXX kilograms or XXX pounds.

4. The resulting figure equals the available amount of cargo and luggage load capacity. For example, if "XXX" amount equals 1400 lbs. and there will be five 150 lb.

Downloaded from www.Manualslib.com manuals search engine

passengers in your vehicle, the amount of available cargo and luggage load capacity is 650 lb. (1400–750 (5 x 150) = 650 lb.)

5. Determine the combined weight of luggage and cargo being loaded on the vehicle. That weight may not safely exceed the available cargo and luggage load capacity calculated in step 4.

6. If your vehicle will be towing a trailer, load from your trailer will be transferred to your vehicle. Consult this manual to determine how this reduces the available cargo and luggage load capacity of your vehicle.

NOTE: The following table shows examples on how to calculate total load, cargo/luggage and towing capacities of your vehicle with varying seating configurations and number and size of occupants. This table is for illustration purposes only and may not be accurate for the seating and load carry capacity of your vehicle.

NOTE: For the following example the combined weight of occupants and cargo should never exceed 865 lbs. (392 Kg).

Downloaded from www.Manualslib.com manuals search engine

Occupants			Combined weight of occupants and cargo from Tire Placard	MINUS	Combined Occupant's weight	=	AVAILABLE Cargo/Luggage and Trailer Tongue Weight
TOTAL	FRONT	REAR					
EXAMPLE 1							
5	2	3			Occupant 1: 200 lbs Occupant 2: 130 lbs Occupant 3: 160 lbs Occupant 4: 100 lbs Occupant 5: 80 lbs TOTAL WEIGHT: 670 lbs		
			865 lbs	minus	670 lbs	=	195 lbs
EXAMPLE 2							
3	2	1			Occupant 1: 210 lbs Occupant 2: 180 lbs Occupant 3: 150 lbs TOTAL WEIGHT: 540 lbs		
			865 lbs	minus	540 lbs	=	325 lbs
EXAMPLE 3							
2	2	0			Occupant 1: 200 lbs Occupant 2: 200 lbs TOTAL WEIGHT: 400 lbs		
			865 lbs	minus	400 lbs	=	465 lbs

EXAMPLE

811a4d11

Downloaded from www.Manualslib.com manuals search engine

WARNING!

Overloading of your tire is dangerous. Overloading can cause tire failure, affect vehicle handling, and increase your stopping distance. Use tires of the recommended load capacity for your vehicle. Never overload them.

TIRES—GENERAL INFORMATION

Tire Pressure

Proper tire inflation pressure is essential to the safe and satisfactory operation of your vehicle. Three primary areas are affected by improper tire pressure:

1. Safety—

WARNING!

Improperly inflated tires are dangerous and can cause accidents.

- **Under inflation increases tire flexing and can result in tire failure.**
- **Over inflation reduces a tire's ability to cushion shock. Objects on the road and chuck holes can cause damage that results in tire failure.**
- **Unequal tire pressures can cause steering problems. You could lose control of your vehicle.**
- **Over inflated or under inflated tires can affect vehicle handling and can fail suddenly, resulting in loss of vehicle control.**
- **Unequal tire pressures from one side of the vehicle to the other can cause the vehicle to drift to the right or left.**

Always drive with each tire inflated to the recommended cold tire inflation pressure.

Downloaded from www.Manualslib.com manuals search engine

2. Economy—
Improper inflation pressures can cause uneven wear patterns to develop across the tire tread. These abnormal wear patterns will reduce tread life resulting in a need for earlier tire replacement. Underinflation also increases tire rolling resistance and results in higher fuel consumption.

3. Ride Comfort and Vehicle Stability—
Proper tire inflation contributes to a comfortable ride. Overinflation produces a jarring and uncomfortable ride.

Tire Inflation Pressures

The proper cold tire inflation pressure for passenger cars is listed on either the face of the driver's door or the driver's side "B" pillar. For vehicles other than passenger cars, the cold tire inflation pressures are listed on either the "B" pillar, the Certification Label or in the Tire Inflation Pressures brochure in the glove compartment.

Some vehicles may have Supplemental Tire Pressure Information for vehicle loads that are less than the maximum loaded vehicle condition. These pressure conditions will be found in the "Supplemental Tire Pressure Information" section of this manual.

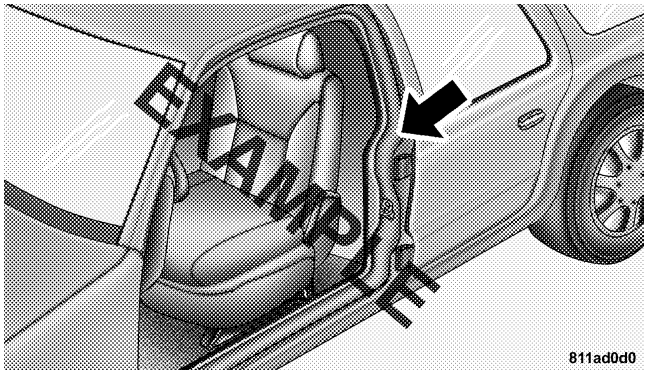

"B" PILLAR

The pressure should be checked and adjusted as well as inspecting for signs of tire wear or visible damage at least once a month. Use a good quality pocket-type gauge to

Downloaded from www.Manualslib.com manuals search engine

check tire pressure. Do not make a visual judgement when determining proper inflation. Radial tires may look properly inflated even when they are underinflated.

CAUTION!

After inspecting or adjusting the tire pressure always reinstall the valve stem cap–if equipped. This will prevent moisture and dirt from entering the valve stem, which could damage the valve stem.

Inflation pressures specified on the placard are always "cold tire inflation pressure". Cold tire inflation pressure is defined as the tire pressure after the vehicle has not been driven for at least 3 hours, or driven less than 1mile (1 km) after a 3 hour period. The cold tire inflation pressure must not exceed the maximum inflation pressure molded into the tire side wall.

Check tire pressures more often if subject to a wide range of outdoor temperatures, as tire pressures vary with temperature changes.

Tire pressures change by approximately 1 psi (7 kPa) per 12° F (7° C) of air temperature change. Keep this in mind when checking tire pressure inside a garage especially in the winter.

Example: If garage temperature = 68° F (20° C) and the outside temperature = 32° F (0° C) then the cold tire inflation pressure should be increased by 3 psi (21 kPa), which equals 1 psi (7 kPa) for every 12° F (7° C) for this outside temperature condition.

Tire pressure may increase from 2 to 6 psi (13 to 40 kPa) during operation. DO NOT reduce this normal pressure build up or your tire pressure will be too low.

Downloaded from www.Manualslib.com manuals search engine

Tire Pressures for High Speed Operation

The manufacturer advocates driving at safe speeds within posted speed limits. Where speed limits or conditions are such that the vehicle can be driven at high speeds, maintaining correct tire inflation pressure is very important. Increased tire pressure and reduced vehicle loading may be required for high speed vehicle operation. Refer to original equipment or an authorized tire dealer for recommended safe operating speeds, loading and cold tire inflation pressures.

WARNING!

High speed driving with your vehicle under maximum load is dangerous. The added strain on your tires could cause them to fail. You could have a serious accident. Don't drive a vehicle loaded to the maximum capacity at continuous speeds above 75 mph (120 km/h).

Downloaded from www.Manualslib.com manuals search engine

Radial-Ply Tires

WARNING!

Combining radial ply tires with other types of tires on your vehicle will cause your vehicle to handle poorly. The instability could cause an accident. Always use radial ply tires in sets of four (or 6, in case of trucks with dual rear wheels). Never combine them with other types of tires.

Cuts and punctures in radial tires are repairable only in the tread area because of sidewall flexing. Consult your authorized tire dealer for radial tire repairs.

Compact Spare Tire — If Equipped

The compact spare is for temporary emergency use with radial tires. It is engineered to be used on your style vehicle only. Since this tire has limited tread life, the original tire should be repaired (or replaced) and reinstalled at the first opportunity.

WARNING!

Temporary use spare tires are for emergency use only. With these tires, do not drive more than 50 mph (80 km/h). Temporary-use spare tires have limited tread life. When two or more tread wear indicators appear in adjacent grooves, the temporary use spare tire needs to be replaced. Be sure to follow the warnings which apply to your spare. Failure to do so could result in spare tire failure and loss of vehicle control.

Downloaded from www.Manualslib.com manuals search engine

Do not install a wheel cover or attempt to mount a conventional tire on the compact spare wheel, since the wheel is designed specifically for the compact spare.

Do not install more than one compact spare tire/wheel on the vehicle at any given time.

CAUTION!

Because of the reduced ground clearance, do not take your vehicle through an automatic car wash with the compact spare installed. Damage to the vehicle may result.

Limited Use Spare — If Equipped

The limited use spare tire is for temporary emergency use on your vehicle. This tire is identified by a limited use spare tire warning label located on the limited use spare tire and wheel assembly. This tire may look like the original equipped tire on the front or rear axle of your vehicle, but it is not. Installation of this limited use spare tire affects vehicle handling. Since it is not the same tire, replace (or repair) the original tire and reinstall on vehicle at the first opportunity.

Downloaded from www.Manualslib.com manuals search engine

WARNING!

The limited use spare tires are for emergency use only. Installation of this limited use spare tire affects vehicle handling. With this tire, do not drive more than 60 mph (100 km/h). Keep inflated to the cold tire inflation pressure listed on either your tire placard or limited use spare tire and wheel assembly. Replace (or repair) the original tire at the first opportunity and reinstall it on your vehicle. Failure to do so could result in loss of vehicle control.

Tire Spinning

When stuck in mud, sand, snow, or ice conditions, do not spin your vehicle's wheels above 35 mph (55 km/h).

See the paragraph on Freeing A Stuck Vehicle in Section 6 of this manual.

WARNING!

Fast spinning tires can be dangerous. Forces generated by excessive wheel speeds may cause tire damage or failure. A tire could explode and injure someone. Do not spin your vehicle's wheels faster than 35 mph (55 km/h) when you are stuck. And don't let anyone near a spinning wheel, no matter what the speed.

Downloaded from www.Manualslib.com manuals search engine

Tread Wear Indicators

Tread wear indicators are in the original equipment tires to help you in determining when your tires should be replaced.

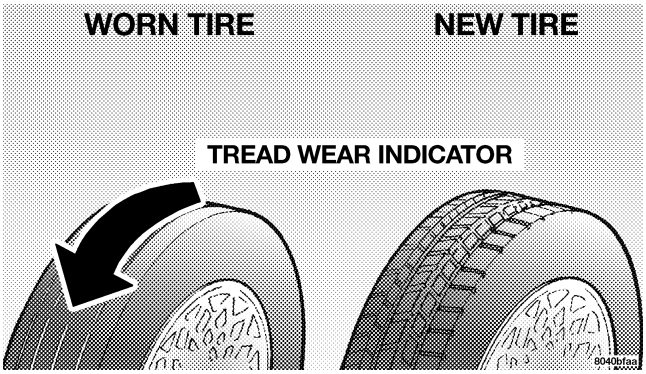

These indicators are molded into the bottom of the tread grooves and will appear as bands when the tread depth becomes 1/16 inch (2 mm). When the indicators appear in 2 or more adjacent grooves, the tire should be replaced. Many states have laws requiring tire replacement at this point.

Replacement Tires

The tires on your new vehicle provide a balance of many characteristics. They should be inspected regularly for wear and correct cold tire inflation pressure. The manufacturer strongly recommends that you use tires equivalent to the originals in size, quality and performance when replacement is needed (see the paragraph on tread wear indicators). Refer to the Tire and Loading Information placard for the size designation of your tire. The service description and load identification will be found on the original equipment tire. Failure to use equivalent replacement tires may adversely affect the safety, handling, and ride of your vehicle. We recommend that you contact your original equipment or an authorized tire dealer with any questions you may have on tire specifications or capability.

Downloaded from www.Manualslib.com manuals search engine

WARNING!

- **Do not use a tire, wheel size or rating other than that specified for your vehicle. Some combinations of unapproved tires and wheels may change suspension dimensions and performance characteristics, resulting in changes to steering, handling, and braking of your vehicle. This can cause unpredictable handling and stress to steering and suspension components. You could lose control and have an accident resulting in serious injury or death. Use only the tire and wheel sizes with load ratings approved for your vehicle.**
- **Never use a tire with a smaller load index or capacity, other than what was originally equipped on your vehicle. Using a tire with a smaller load index could result in tire overloading and failure. You could lose control and have an accident.**
- **Failure to equip your vehicle with tires having adequate speed capability can result in sudden tire failure and loss of vehicle control.**

CAUTION!

Replacing original tires with tires of a different size may result in false speedometer and odometer readings.

Alignment And Balance

Poor suspension alignment may result in:

- Fast tire wear.
- Uneven tire wear, such as feathering and one-sided wear.
- Vehicle pull to right or left.

Tires may also cause the vehicle to pull to the left or right. Alignment will not correct this condition. See your dealer for proper diagnosis.

Downloaded from www.Manualslib.com manuals search engine

Improper alignment will not cause vehicle vibration. Vibration may be a result of tire and wheel out-of-balance. Proper balancing will reduce vibration and avoid tire cupping and spotty wear.

ALL WHEEL DRIVE (AWD) — IF EQUIPPED

CAUTION!

All Wheel Drive (AWD) vehicles must have the same size and type tires on all wheel positions. Unequal tire sizes must not be used. Unequal tire size may cause failure of the power transfer unit and/or the viscous coupling.

TIRE PRESSURE MONITOR SYSTEM — IF EQUIPPED

The Tire Pressure Monitor System (TPM) system uses wireless technology with wheel rim mounted electronic sensors to monitor tire pressure levels (EXCLUDING THE SPARE TIRE). Sensors, mounted to each wheel as part of the valve stem, transmit tire pressure readings to the Electronic Vehicle Information Center (EVIC) display in the instrument cluster.

NOTE: It is particularly important, for you to check the tire pressure in all of your tires regularly and too maintain the proper pressure.

When the appropriate conditions exist, the Electronic Vehicle Information Center (EVIC) displays the following messages.

Downloaded from www.Manualslib.com manuals search engine

1,2,3, OR 4 TIRE(S) LOW PRESSURE

Low tire pressure levels of 25 psi [1.72 bars] (172 kPa) or less detected in one or more tires.

Inspect all tires for proper inflation pressure, once the proper tire pressure has been set, the TPM system warning will reset automatically when the vehicle has been driven for at least 2 minutes at or above 20 mph (32 km/h).

1,2,3, OR 4 TIRE(S) HIGH PRESSURE

High tire pressure levels of 45 psi [3.10 bars] (310 kPa) or more detected in one or more tires.

Inspect all tires for proper inflation pressure, once the proper tire pressure has been set, the TPM system warning will reset automatically when the vehicle has been driven for at least 2 minutes at or above 20 mph (32 km/h).

SERVICE TIRE PRESSURE SYSTEM/SEE OWNER'S MANUAL

The Tire Pressure Monitor System (TPM) system requires service.

See your authorized dealer for service.

TIRE PRESSURE UNAVAILABLE

The TPM system function is temporarily unavailable due to external electromagnetic interference, such as portable electronic devices, or near by radio or TV towers.

Move the vehicle to an area free from radio, TV antennas and transmitting towers or disconnect any portable electronic devices. Once the external interference is removed the TPM system will resume normal operation and "TIRE PRESSURE NOW AVAILABLE" will appear in the Electronic Vehicle Information Center (EVIC) display.

Downloaded from www.Manualslib.com manuals search engine

CAUTION!

The TPM system has been optimized for the original equipment tires and wheels. TPM system pressures have been established for the tire size equipped on your vehicle. Undesirable system operation or sensor damage may result when using replacement equipment that is not of the same size, type, and/or style. After-market wheels can cause sensor damage. Do not use tire sealant or balance beads if your vehicle is equipped with a TPM system, as damage to the sensors may result.

NOTE:

- The TPM system can inform the driver of a low tire pressure condition of 25 psi [1.72 bars] (172 kPa) or less, or high a tire pressure condition of 45 psi [3.10 bars] (310 kPa) or more.
- The TPM system is not intended to replace normal tire care and maintenance, nor to provide warning of a tire failure or condition.
- The TPM system should not be used as a tire pressure gauge while adjusting your tire pressure.
- The TPM system must be retrained after a tire rotation or wheel rim mounted sensor replacement. See your authorized dealer for service.

CAUTION!

After inspecting or adjusting the tire pressure always reinstall the valve stem cap, if equipped. This will prevent moisture and dirt from entering the valve stem, which could damage the wheel rim sensor.

Downloaded from www.Manualslib.com manuals search engine

General Information

This device complies with part 15 of the FCC rules and RSS 210 of Industry Canada. Operation is subject to the following conditions:

- This device may not cause harmful interference.
- This device must accept any interference received, including interference that may cause undesired operation.

The tire pressure sensors are covered under one of the following licenses:

United States KR5S120123
Canada 2671-S120123

TIRE CHAINS

Use only compact chains, or other traction aids that meet SAE type "Class S" specifications. Chains must be the proper size for the vehicle, as recommended by the chain manufacturer.

NOTE: Do not use tire chains on a compact spare tire.

Downloaded from www.Manualslib.com manuals search engine

CAUTION!

To avoid damage to your vehicle or tires, observe the following precautions:

- **Because of restricted chain clearance between tires and other suspension components, it is important that only chains in good condition are used. Broken chains can cause serious damage. Stop the vehicle immediately if noise occurs that could indicate chain breakage. Remove the damaged parts of the chain before further use.**
- **Install chains on the front wheels as tightly as possible and then retighten after driving about ½ mile (0.8 km).**
- **Do not exceed 45 mph (70 km/h).**
- **Drive cautiously and avoid severe turns and large bumps, especially with a loaded vehicle.**
- **Do not use on rear wheels of All Wheel Drive (AWD) vehicles.**
- **Do not drive for prolonged period on dry pavement.**
- **Observe the tire chain manufacturer's instructions on the method of installation, operating speed, and conditions for use. Always use the lower suggested operating speed of the chain manufacturer if different than the speed recommended by the manufacture.**

NOTE: In order to avoid damage to tires, chains, and your vehicle do not drive for a prolonged period of time on dry pavement. Observe the tire chain manufacturer's instructions on method of installation, operating speed, and conditions for usage.

Always use the lower suggested operating speed if both the chain manufacturer and vehicle manufacture suggest a maximum speed. This notice applies to all chain traction devices, including link and cable (radial) chains.

SNOW TIRES

Some areas of the country require the use of snow tires during winter. Standard tires are of the all season type and satisfy this requirement as indicated by the M+S designation on the tire side wall.

If you need snow tires, select tires equivalent in size and type to the original equipment tires. Use snow tires only in sets of 4, failure to do so may adversely affect the safety and handling of your vehicle.

Downloaded from www.Manualslib.com manuals search engine

Snow tires generally have lower speed ratings than what was originally equipped with your vehicle and should not be operated at sustained speeds over 75 mph (120 km/h).

TIRE ROTATION RECOMMENDATIONS

Tires on the front and rear axles of vehicles operate at different loads and perform different steering, driving, and braking functions. For these reasons, they wear at unequal rates, and tend to develop irregular wear patterns.

These effects can be reduced by timely rotation of tires. The benefits of rotation are especially worthwhile with aggressive tread designs such as those on all season type tires. Rotation will increase tread life, help to maintain mud, snow, and wet traction levels, and contribute to a smooth, quiet ride.

Follow the recommended tire rotation frequency for your type of driving found in the "Maintenance Schedules" Section of this manual. More frequent rotation is permissible if desired. The reasons for any rapid or unusual wear should be corrected prior to rotation being performed.

NOTE: The Tire Pressure Monitor system must be retrained following a tire rotation. See your authorized dealer for service.

The suggested rotation method is the "forward-cross" shown in the following diagram.

TIRE ROTATION PATTERN

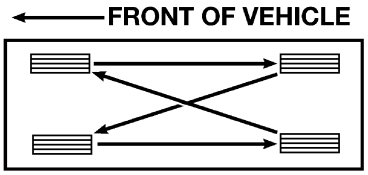

4 TIRE ROTATION

80ba79fe

Downloaded from www.Manualslib.com manuals search engine

FUEL REQUIREMENTS

Your vehicle is designed to meet all emissions regulations and provide satisfactory fuel economy and performance when using high quality unleaded gasoline having an octane range of 87 to 89 or higher. The manufacturer recommends the use of 89 octane for optimum performance.

Light spark knock at low engine speeds is not harmful to your engine. However, continued heavy spark knock at high speeds can cause damage and immediate service is required. Engine damage resulting from operating with a heavy spark knock may not be covered by the new vehicle warranty.

Poor quality gasoline can cause problems such as hard starting, stalling and hesitations. If you experience these symptoms, try another brand of gasoline before considering service for the vehicle.

Over 40 automobile manufacturers around the world have issued and endorsed consistent gasoline specifications (the World Wide Fuel Charter, WWFC) to define fuel properties necessary to deliver enhanced emissions, engine performance, and durability for your vehicle. The manufacturer recommends the use of gasolines that meet the WWFC specifications if they are available.

Reformulated Gasoline

Many areas of the country require the use of cleaner burning gasoline referred to as “Reformulated Gasoline”.

Reformulated gasolines contain oxygenates, and are specifically blended to reduce vehicle emissions and improve air quality.

The manufacturer supports the use of reformulated gasolines. Properly blended reformulated gasolines will provide excellent performance and durability of engine and fuel system components.

Downloaded from www.Manualslib.com manuals search engine

Gasoline/Oxygenate Blends

Some fuel suppliers blend unleaded gasoline with oxygenates such as 10% ethanol, MTBE, and ETBE. Oxygenates are required in some areas of the country during the winter months to reduce carbon monoxide emissions. Fuels blended with these oxygenates may be used in your vehicle.

CAUTION!
DO NOT use gasolines containing Methanol. Use of these blends may result in starting and driveability problems and may damage critical fuel system components.

Problems that result from using methanol/gasoline blends are not the responsibility of the manufacturer and may not be covered by the vehicle warranty. While MTBE is an oxygenate made from Methanol, it does not have the negative effects of Methanol.

MMT In Gasoline

MMT is a manganese containing metallic additive that is blended into some gasoline to increase the octane number. Gasolines blended with MMT offer no performance advantage beyond gasolines of the same octane number without MMT. Gasolines blended with MMT have shown to reduce spark plug life and reduce emission system performance in some vehicles. The manufacturer recommends using gasolines without MMT. Since the MMT content of gasoline may not be indicated on the pump, you should ask your gasoline retailer whether or not his/her gasoline contains MMT.

It is even more important to look for gasolines without MMT in Canada, because MMT can be used at levels higher than those allowed in the United States.

Downloaded from www.Manualslib.com manuals search engine

MMT is prohibited in Federal and California reformulated gasolines.

Sulfur In Gasoline

Your vehicle may have been designed to meet California low emission standards when using cleaner burning California reformulated gasoline with low sulfur. This vehicle may be sold nationwide. Your vehicle will operate satisfactorily on fuels meeting Federal specification, but emission control system performance may be adversely affected.

Gasoline sold outside of California is permitted to have higher sulfur levels which may affect the performance of the vehicle's catalytic converter. This may cause the Malfunction Indicator Light to illuminate. The manufacturer recommends that you try a different brand of unleaded gasoline having lower sulfur to determine if the problem is fuel related prior to returning your vehicle to an authorized dealer for service.

CAUTION!

If the Malfunction Indicator light is flashing, immediate service is required. Refer to the paragraph on the Onboard Diagnostics System in section 7 of this manual.

Materials Added to Fuel

All gasoline sold in the United States is required to contain effective detergent additives. Use of additional detergents or other additives are not needed under normal conditions and would result in additional cost. Therefore you should not have to add anything to the fuel.

Downloaded from www.Manualslib.com manuals search engine

Fuel System Cautions

CAUTION!

Follow these guidelines to maintain your vehicle's performance:

- The use of leaded gas is prohibited by Federal law. Using leaded gasoline can impair engine performance, damage the emission control system, and could result in loss of warranty coverage.
- An out-of-tune engine, or certain fuel or ignition malfunctions, can cause the catalytic converter to overheat. If you notice a pungent burning odor or some light smoke, your engine may be out-of-tune or malfunctioning and may require immediate service. Contact your dealer for service assistance.
- The use of fuel additives which are now being sold as octane enhancers are not recommended. Most of these products contain high concentrations of methanol. Fuel system damage or vehicle performance problems resulting from the use of such fuels or additives are not the responsibility of the manufacturer and may not be covered under the New Vehicle Warranty.

NOTE: Intentional tampering with emissions control systems can result in civil penalties being assessed against you.

Carbon Monoxide Warnings

WARNING!

Carbon monoxide (CO) in exhaust gases is deadly. Follow the precautions below to prevent carbon monoxide poisoning:

Downloaded from www.Manualslib.com manuals search engine

- Do not inhale exhaust gases. They contain carbon monoxide, a colorless and odorless gas which can kill. Never run the engine in a closed area, such as a garage, and never sit in a parked vehicle with the engine running for an extended period. If the vehicle is stopped in an open area with the engine running for more than a short period, adjust the ventilation system to force fresh, outside air into the vehicle.
- Guard against carbon monoxide with proper maintenance. Have the exhaust system inspected every time the vehicle is raised. Have any abnormal conditions repaired promptly. Until repaired, drive with all side windows fully open.
- Keep the liftgate closed when driving your vehicle to prevent carbon monoxide and other poisonous exhaust gases from entering the vehicle.

ADDING FUEL

Fuel Filler Cap (Gas Cap)

The gas cap is located behind the fuel filler door on the left side of the vehicle. If the gas cap is lost or damaged, be sure the replacement cap is for use with this vehicle.

CAUTION!

Damage to the fuel system or emission control system could result from using an improper fuel tank filler tube cap (gas cap). A poorly fitting cap could let impurities into the fuel system.

Downloaded from www.Manualslib.com manuals search engine

CAUTION!

To avoid fuel spillage and overfilling, do not "top off" the fuel tank after filling. When the fuel nozzle "clicks" or shuts off, the fuel tank is full.

NOTE:

- Tighten the gas cap until you hear a "clicking" sound. This is an indication that the gas cap is properly tightened. If the gas cap is not secured properly the Malfunction Indicator Light in the instrument cluster will turn on. Make sure that the gas cap is tightened each time the vehicle is refueled.
- When the fuel nozzle "clicks" or shuts off, the fuel tank is full.

WARNING!

- **Remove the fuel tank filler tube cap (gas cap) slowly to prevent fuel spray from the filler neck which may cause injury.**
- **The volatility of some gasolines may cause a buildup of pressure in the fuel tank that may increase while you drive. This pressure can result in a spray of gasoline and/or vapors when the cap is removed from a hot vehicle. Removing the cap slowly allows the pressure to vent and prevents fuel spray.**
- **Never have any smoking materials lit in or near the vehicle when the gas cap is removed or the tank filled.**
- **Never add fuel to the vehicle when the engine is running.**
- **A fire may result if gasoline is pumped into a portable container that is inside of a vehicle. You could be burned. Always place gas containers on the ground while filling.**

Downloaded from www.Manualslib.com manuals search engine

VEHICLE LOADING

The load carrying capacity of your vehicle is shown in the charts that follow. This information should be used for passenger and luggage loading as indicated.

If the seatbacks are folded for carrying cargo, do not exceed the specified GVWR and GAWR.

Vehicle Certification Label

Your vehicle has a certification label attached to the rear of the driver's door.

The label contains the following information:

- Name of manufacturer
- Month and year of manufacture
- Gross Vehicle Weight Rating (GVWR)
- Gross Axle Weight Rating (GAWR) front
- Gross Axle Weight Rating (GAWR) rear
- Vehicle Identification Number (VIN)
- Type of Vehicle
- Month Day and Hour of Manufacture (MDH)

The bar code allows a computer scanner to read the Vehicle Identification Number (VIN).

Gross Vehicle Weight Rating (GVWR)

The GVWR is the total allowable weight of your vehicle. This includes driver, passengers, and cargo. The total load must be limited so that you do not exceed the GVWR.

Gross Axle Weight Rating (GAWR)

The GAWR is the maximum capacity of the front and rear axles. Distribute the load over the front and rear axles evenly. Make sure that you do not exceed either front or rear GAWR.

Downloaded from www.Manualslib.com manuals search engine

WARNING!

Because the front wheels drive and steer the vehicle, it is important that you do not exceed the maximum front or rear GAWR. A dangerous driving condition can result if either rating is exceeded. You could lose control of the vehicle and have an accident.

Overloading

The load carrying components (axle, springs, tires, wheels, etc.) of your vehicle will provide satisfactory service as long as you do not exceed the GVWR and front and rear GAWR.

The best way to figure out the total weight of your vehicle is to weigh it when it is fully loaded and ready for operation. Weigh it on a commercial scale to insure that it is not over the GVWR.

Figure out the weight on the front and rear of the vehicle separately. It is important that you distribute the load evenly over the front and rear axles.

Overloading can cause potential safety hazards and shorten useful service life. Heavier axles or suspension components do not necessarily increase the vehicle's GVWR.

Loading

To load your vehicle properly, first figure out its empty weight, axle by axle and side by side. Store heavier items down low and be sure you distribute their weight as evenly as possible. Stow all loose items securely before driving. If weighing the loaded vehicle shows that you have exceeded either GAWR, but the total load is within the specified GVWR, you must redistribute the weight. Improper weight distribution can have an adverse effect on the way your vehicle steers and handles and the way the brakes operate.

Downloaded from www.Manualslib.com manuals search engine

A loaded vehicle is shown in the illustration. Note that neither the GVWR or the GAWR capacities have been exceeded.

GROSS VEHICLE WEIGHT RATING (GVWR) 2630 KG (5800 LBS)
(Example Only)

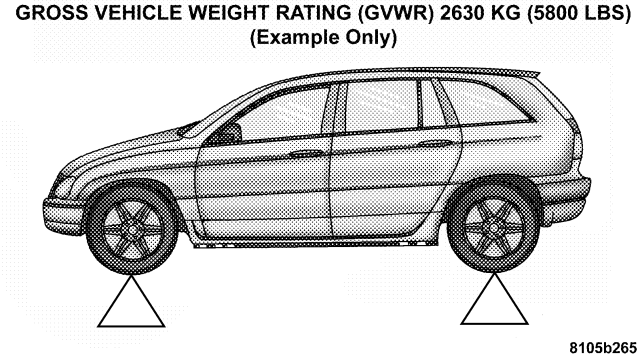

8105b265

Example Only	Front Axle	Rear Axle
Empty Weight	2538 lbs (1151 kg)	2076 lbs (942 kg)
Load (Including driver, passengers and cargo)	223 lbs (101 kg)	890 lbs (404 kg)
Total	2762 lbs (1253 kg)	2968 lbs (1346 kg)
GAWR	2826 lbs (1282 kg)	3035 lbs (1377 kg)

TRAILER TOWING

In this section you will find safety tips and information on limits to the type of towing you can reasonably do with your vehicle. Before towing a trailer carefully review this information to tow your load as efficiently and safely as possible.

To maintain warranty coverage, follow the requirements and recommendations in this manual concerning vehicles used for trailer towing.

Downloaded from www.Manualslib.com manuals search engine

Perform maintenance services as prescribed in the maintenance schedules manual. When your vehicle is used for trailer towing, never exceed the gross axle weight rating (GAWR) by the addition of:

- The tongue weight of the trailer.
- The weight of any other type of cargo or equipment put in or on your vehicle.
- Remember that everything put in or on the trailer adds to the load on your vehicle.

Warranty Requirements

The Manufacturer's Passenger Vehicle Warranty will apply to vehicles used to tow trailers for non-commercial use. However the following conditions must be met:

- The maximum frontal area of the trailer cannot exceed 32 square feet (2.97 square meters).
- The trailer tongue load must be considered as part of the combined weight of occupants and cargo, and should never exceed the weight referenced on the Tire and Loading Information placard. Refer to the Tire–Safety Information Section in this manual.
- The "D" range can be selected when towing. However, if frequent shifting occurs while in this range, the "3" range must be selected.

NOTE: Using the "3" range while operating the vehicle under heavy operating conditions will improve performance and extend transmission life by reducing excessive shifting and heat build up.

- Do not attempt to tow a trailer while using a compact spare tire.
- Whenever you pull a trailer, regardless of the trailer size, stop lights and turn signals on the trailer are recommended for motoring safety.

Downloaded from www.Manualslib.com manuals search engine

- The automatic transmission fluid and filter should be changed if you REGULARLY tow a trailer for more than 45 minutes of continuous operation. See Schedule "B" in section 8 of this manual for transmission fluid change intervals.

NOTE:

- Check the automatic transmission fluid level before towing. Fluid discoloration, or a burnt odor, shows the need for a transmission fluid and filter change.
- For vehicles equipped with Autostick. By using the Autostick modes, and selecting a specific gear range, frequent shifting can be avoided. The highest gear range should be selected that allows for adequate performance. For example, choose "4" if the desired speed can be maintained. Choose "3" or "2" if needed to maintain the desired speed.
- Extended driving at high RPM should be avoided to prevent excess heat generation. A reduction in vehicle speed may be required to avoid extended driving at high RPM. Return to a higher gear range or vehicle speed when road conditions and RPM level allows.

TRAVEL CONDITION	**MAXIMUM TRAILER WEIGHT(TRAILER FRONTAL AREA NOT TO EXCEED 32 SQ. FT.)**
	3.5L ENGINES
	MAX. COMBINED WEIGHT OF VEHICLE AND TRAILER NOT TO EXCEED 8,600 lbs (3900 kg)
UP TO 2 PERSONS & LUGGAGE	3,500 lbs (1600 kg)
3 TO 4 PERSONS & LUGGAGE	3,000 lbs (1360 kg)
5 TO 6 PERSONS & LUGGAGE	1,000 lbs (454 kg)

Downloaded from www.Manualslib.com manuals search engine

A load equalizing hitch is recommended for loaded trailer weights above 1,000 lbs (454 kg) and required for weights above 2,000 lbs (907 kg).

CAUTION!

If the trailer weighs more than 1,000 lbs (454 kg) loaded, it should have its own brakes and they should be of adequate capacity. Failure to do this could lead to accelerated brake lining wear, higher brake pedal effort, and longer stopping distances.

WARNING!

Connecting trailer brakes to your vehicle's hydraulic brake lines can overload your brake system and cause it to fail. You might not have brakes when you need them and could have an accident.

Downloaded from www.Manualslib.com manuals search engine

Downloaded from www.Manualslib.com manuals search engine

WHAT TO DO IN EMERGENCIES

CONTENTS

- Hazard Warning Flasher 262
- If Your Engine Overheats 263
- Jacking And Tire Changing 264
  - Jack Location 265
  - Spare Tire Stowage 265
  - Preparations For Jacking 266
  - Jacking Instructions 267
- Jump-Starting Procedures If Battery Is Low 270
- Driving On Slippery Surfaces 272
  - Acceleration 272
  - Traction 272
- Freeing A Stuck Vehicle 273
- Towing A Disabled Vehicle 274
  - With Ignition Key 274
  - Without The Ignition Key 275
  - Towing This Vehicle Behind Another Vehicle (Flat Towing With All Four Wheels On The Ground) .276
  - Towing This Vehicle Behind Another Vehicle With A Tow Dolley 276

Downloaded from www.Manualslib.com manuals search engine

HAZARD WARNING FLASHER

The hazard flasher switch is located in the center of the instrument panel above the center air outlets.

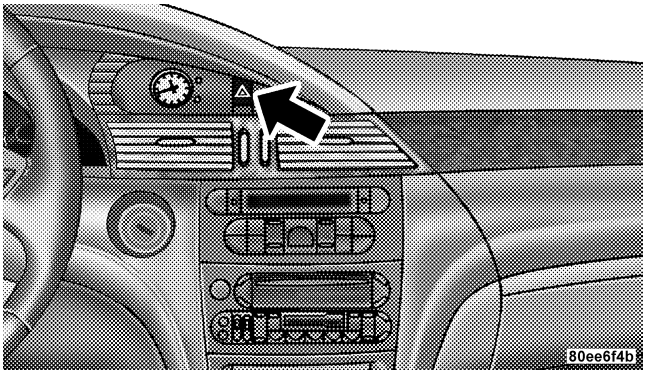

To engage the Hazard Warning Flashers, depress the switch on the instrument panel. When the Hazard Warning Switch is activated, all directional turn signals will flash on and off to warn oncoming traffic of an emergency. Push the switch a second time to turn off the flashers.

This is an emergency warning system and should not be used when the vehicle is in motion. Use it when your vehicle is disabled and is creating a safety hazard for other motorists.

When you must leave the vehicle to seek assistance, the Hazard Warning Flashers will continue to operate even though the ignition switch is OFF.

NOTE: With extended use, the Hazard Warning Flashers may wear down your battery.

Downloaded from www.Manualslib.com manuals search engine

IF YOUR ENGINE OVERHEATS

In any of the following situations, you can reduce the potential for overheating by taking the appropriate action.

- On the highways — Slow down.
- In city traffic — While stopped, put transmission in neutral, but do not increase engine idle speed.

NOTE: There are steps that you can take to slow down an impending overheat condition. If your air conditioner is on, turn it off. The air conditioning system adds heat to the engine cooling system and turning off the A/C removes this heat. You can also turn the Temperature control to maximum heat, the Mode control to floor, and the fan control to High. This allows the heater core to act as a supplement to the radiator and aids in removing heat from the engine cooling system.

CAUTION!

Driving with a hot cooling system could damage your vehicle. If temperature gauge reads "H", pull over and stop the vehicle. Idle the vehicle with the air conditioner turned off until the pointer drops back into the normal range. If the pointer remains on the "H", turn the engine off immediately, and call for service.

Downloaded from www.Manualslib.com manuals search engine

WARNING!

A hot engine cooling system is dangerous. You or others could be badly burned by steam or boiling coolant. You may want to call a service center if your vehicle overheats. If you decide to look under the hood yourself, see Section 7, Maintenance, of this manual. Follow the warnings under the Cooling System Pressure Cap paragraph.

JACKING AND TIRE CHANGING

WARNING!

- **Getting under a jacked-up vehicle is dangerous. The vehicle could slip off the jack and fall on you. You could be crushed. Never get any part of your body under a vehicle that is on a jack. If you need to get under a raised vehicle, take it to a service center where it can be raised on a lift.**
- **The jack is designed to use as a tool for changing tires only. The jack should not be used to lift the vehicle for service purposes. The vehicle should be jacked on a firm level surface only. Avoid ice or slippery areas.**

Downloaded from www.Manualslib.com manuals search engine

Jack Location

The jack and jack-handle are stowed in the rear storage bin located in the rear cargo floor. Pull up on the storage bin cover and liner to access the jack and jack tools.

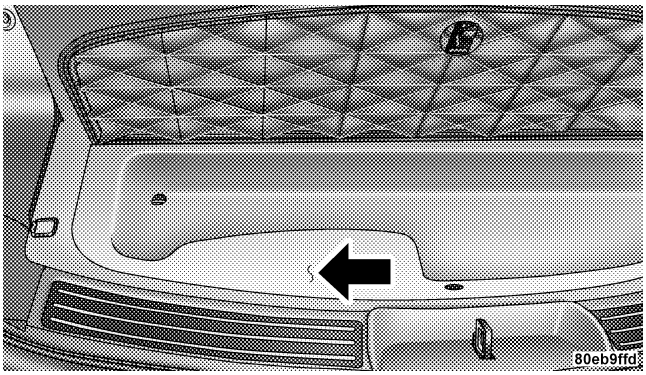

Spare Tire Stowage

The spare tire is stowed under the rear of the vehicle by means of a cable winch mechanism. To remove or stow the spare, use the jack handle to rotate the "spare tire drive" nut. The nut is located under the trim cover at the center of the rear storage bin in the rear cargo floor.

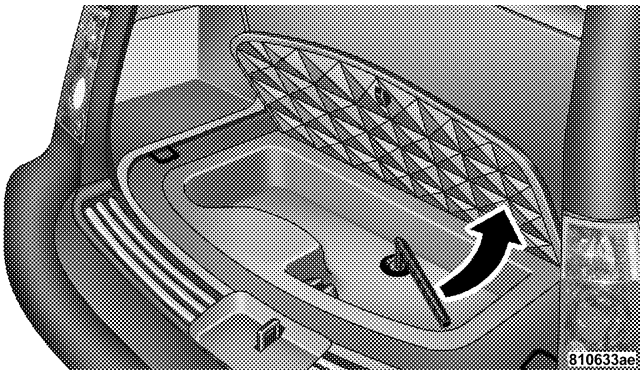

6

Downloaded from www.Manualslib.com manuals search engine

Spare Tire Removal

Fit the jack-handle over the drive nut. Rotate the nut to the left until the spare is on the ground with enough slack cable to allow you to pull the tire out from under the vehicle.

CAUTION!

The winch mechanism is designed for use with the jack handle only. Use of an air wrench or other power tools is not recommended and can damage the winch.

When the spare is clear, tilt the retainer at the end of the cable and pull it through the center of the wheel.

Preparations For Jacking

Park the vehicle on a firm level surface, avoid ice or slippery areas, **set the parking brake** and place the gear selector in PARK. Turn OFF the ignition.

WARNING!

Do not attempt to change a tire on the side of the vehicle close to moving traffic. Pull far enough off the road to avoid the danger of being hit when operating the jack or changing the wheel.

- Turn on the Hazard Warning Flasher.

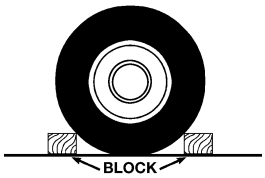

- Block both the front and rear of the wheel diagonally opposite the jacking position. For example, if changing the right front tire, block the left rear wheel.

Downloaded from www.Manualslib.com manuals search engine

- Passengers should not remain in the vehicle when the vehicle is being jacked.

Jacking Instructions

1. Remove the spare wheel, scissors jack and jack-handle from stowage.

2. Carefully pry off the wheel center cap using the tip of the jack handle.

3. Loosen (but do not remove) the wheel lug nuts by turning them to the left one turn while the wheel is still on the ground.

4. There are two jack engagement locations on each side of the body — see illustration.

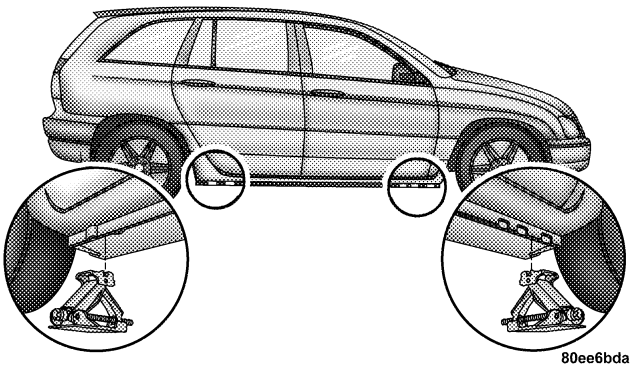

5. These locations are on the sill flange on the underside of the body. The jack is to be located, engaging the flanges, 20 cm (8 inches) inward from the edge of the wheel opening closest to the wheel to be changed. Place the wrench on the jack screw and turn to the right until the jack head is properly engaged in the described

Downloaded from www.Manualslib.com manuals search engine

location. **Do not raise the vehicle until you are sure the jack is securely engaged. Never jack up the vehicle using any suspension components.**

6. Raise the vehicle by turning the jack screw to the right, using the swivel wrench. Raise the vehicle only until the tire just clears the surface and enough clearance is obtained to install the spare tire. Minimum tire lift provides maximum stability.

WARNING!

Raising the vehicle higher than necessary can make the vehicle less stable. It could slip off the jack and hurt someone near it. Raise the vehicle only enough to remove the tire.

7. Remove the wheel lug nuts, then pull the wheel off the hub.

8. Install the spare wheel. Then install the wheel lug nuts with the cone shaped end of the nut toward the wheel. Lightly tighten the lug nuts. To avoid the risk of forcing the vehicle off the jack, do not tighten the lug nuts fully until the vehicle has been lowered.

9. Lower the vehicle by turning the jack screw to the left.

10. Finish tightening the lug nuts. Push down on the wrench while tightening for increased leverage. Alternate lug nuts until each nut has been tightened twice. Correct wheel nut tightness is 130 N·m (95 ft. lbs). If in doubt about the correct tightness, have them checked with a torque wrench by your dealer or at a service station.

11. Lower the jack to its fully closed position.

Downloaded from www.Manualslib.com manuals search engine

WARNING!

A loose tire or jack, thrown forward in a collision or hard stop could endanger the occupants of the vehicle. Always stow the jack parts and the spare tire in the places provided.

12. Secure the flat or spare tire as follows:

- The center cap of a cast aluminum wheel must be removed prior to flat tire stowage. Store the center cap inside the glove box or other storage compartment.
- Turn the wheel so that the valve-stem is down. Slide the wheel retainer through the center of the wheel and position it properly across the wheel opening.
- For convenience in checking the spare tire inflation, stow with the valve-stem toward the rear of the vehicle.
- Using the jack-handle, rotate the drive nut to the right until the wheel is drawn into place against the underside of the vehicle.
- Continue to rotate the nut until you hear the mechanism click three times. It cannot be overtightened. Push against the tire several times to be sure it is securely in place.

13. Stow jack and handle.

14. Check the tire pressure as soon as possible. Correct pressure as required.

NOTE: When reinstalling the wheel center cap, insure that the valve stem symbol on the back of the cap is pointed toward the wheel valve stem. Install the center cap using hand pressure only. Do not use a hammer.

Downloaded from www.Manualslib.com manuals search engine

JUMP-STARTING PROCEDURES IF BATTERY IS LOW

WARNING!

Take care to avoid the radiator cooling fan whenever the hood is raised. It can start anytime the ignition switch is on. You can be hurt by the fan.

Downloaded from www.Manualslib.com manuals search engine

WARNING!

- **Do not attempt to push or tow your vehicle to get it started. Vehicles equipped with an automatic transmission cannot be started this way. Unburned fuel could enter the catalytic converter and once the engine has started, ignite and damage the converter and vehicle. If the vehicle has a discharged battery, booster cables may be used to obtain a start from another vehicle. This type of start can be dangerous if done improperly, so follow this procedure carefully.**
- **Battery fluid is a corrosive acid solution; do not allow battery fluid to contact eyes, skin or clothing. Don't lean over battery when attaching clamps or allow the clamps to touch each other. If acid splashes in eyes or on skin, flush contaminated area immediately with large quantities of water.**
- **A battery generates hydrogen gas which is flammable and explosive. Keep flame or spark away from the vent holes. Do not use a booster battery or any other booster source with an output that exceeds 12 volts.**

1. Wear eye protection and remove any metal jewelry such as watch bands or bracelets that might make an inadvertent electrical contact.

2. When boost is provided by a battery in another vehicle, park that vehicle within booster cable reach and without letting the vehicles touch. Set the parking brake, place the automatic transmission in PARK and turn the ignition switch to the OFF position for both vehicles.

3. Turn off the heater, radio and all unnecessary electrical loads.

4. Connect one end of a jumper cable to the positive terminal of the discharged battery. Connect the other end of the same cable to the positive terminal of the booster battery.

Downloaded from www.Manualslib.com manuals search engine

5. Connect the other cable, first to the negative terminal of the booster battery and **then to the engine of the vehicle with the discharged battery.** Make sure you have a good contact on the engine.

6. Start the engine in the vehicle which has the booster battery, let the engine idle a few minutes, then start the engine in the vehicle with the discharged battery.

7. When removing the jumper cables, reverse the above sequence exactly. Be careful of the moving belts and fan.

DRIVING ON SLIPPERY SURFACES

Acceleration

Rapid acceleration on snow covered, wet, or other slippery surfaces may cause the front wheels to pull erratically to the right or left. This phenomenon occurs when there is a difference in the surface traction under the front (driving) wheels.

WARNING!

Rapid acceleration on slippery surfaces is dangerous. Unequal traction can cause sudden pulling of the front wheels. You could lose control of the vehicle and possibly have an accident. Accelerate slowly and carefully whenever there is likely to be poor traction (ice, snow, wet mud, loose sand, etc.).

Traction

When driving on wet or slushy roads, it is possible for a wedge of water to build up between the tire and road surface. This is known as hydroplaning and may cause partial or complete loss of vehicle control and stopping ability. To reduce this possibility, the following precautions should be observed:

1. Slow down during rainstorms or when roads are slushy.

Downloaded from www.Manualslib.com manuals search engine

2. Slow down if road has standing water or puddles.

3. Replace tires when tread wear indicators first become visible.

4. Keep tires properly inflated.

5. Maintain sufficient distance between your vehicle and the vehicle in front to avoid a collision in a sudden stop.

FREEING A STUCK VEHICLE

If your vehicle becomes stuck in mud, sand or snow, it can often be moved by a rocking motion. Turn your steering wheel right and left to clear the area around the front wheels. Then shift back and forth between Reverse and Drive. Usually the least accelerator pedal pressure to maintain the rocking motion without spinning the wheels is most effective.

WARNING!

Fast spinning tires can be dangerous. Forces generated by excessive wheel speeds may cause tire damage or failure. A tire could explode and injure someone. Do not spin your vehicle's wheels faster than 35 mph (55 km/h) when you are stuck. And don't let anyone near a spinning wheel, no matter what the speed.

CAUTION!

Racing the engine or spinning the wheels too fast may lead to transmission overheating and failure. It can also damage the tires. Do not spin the wheels above 35 mph (55 km/h).

Downloaded from www.Manualslib.com manuals search engine

TOWING A DISABLED VEHICLE

With Ignition Key

Front Wheel Drive

Your vehicle may be towed under the following conditions: The gear selector must be in NEUTRAL, the distance to be traveled must not exceed 100 miles (160 km), the towing speed must not exceed 44 mph (72 km/h), and both front and rear wheels must be on the ground. Exceeding these towing limits may cause a transmission geartrain failure. If the transmission is not operative, or if the vehicle is to be towed more than 100 miles (160 km), the vehicle must be towed with the front wheels off the ground.

All Wheel Drive

Your vehicle may be towed under the following conditions: The gear selector must be in NEUTRAL, the distance to be traveled must not exceed 100 miles (160 km), the towing speed must not exceed 44 mph (72 km/h), and both front and rear wheels must be on the ground. If your vehicle must be towed farther or at a higher rate of speed, it must be transported on a flat bed truck.

Downloaded from www.Manualslib.com manuals search engine

All Transmissions

CAUTION!

- **Do not attempt to tow this vehicle from the front with sling type towing equipment. Damage to the front fascia will result.**
- **Always use wheel lift equipment when towing from the front. The only other approved method of towing is with a flat bed truck.**
- **Do not tow the vehicle from the rear. Damage to the rear sheet metal, liftgate and fascia will occur.**
- **Do not push or tow this vehicle with another vehicle as damage to the bumper fascia and transmission may result.**

If it is necessary to use the accessories while being towed (wipers, defrosters, etc.), the key must be in the ON position, not the ACCESSORY position. Make certain the transmission remains in NEUTRAL.

Without The Ignition Key

Special care must be taken when the vehicle is towed with the ignition in the LOCK position. The only approved method of towing with out the ignition key is with a flat bed truck. Proper towing equipment is necessary to prevent damage to the vehicle.

Downloaded from www.Manualslib.com manuals search engine

TOWING THIS VEHICLE BEHIND ANOTHER VEHICLE (Flat towing with all four wheels on the ground)

Flat towing of vehicles equipped with an automatic transmission, is only permitted within the limitations described in this section.

TOWING THIS VEHICLE BEHIND ANOTHER VEHICLE WITH A TOW DOLLEY

The manufacturer **does not recommend** that you tow an All-Wheel Drive (AWD) or front wheel drive vehicle on a tow dolley. Vehicle damage may occur.

Downloaded from www.Manualslib.com manuals search engine

MAINTAINING YOUR VEHICLE

CONTENTS

- 3.5L Engine 280
- Onboard Diagnostic System — OBD II 281
- Emissions Inspection And Maintenance Programs 282
- Replacement Parts 283
- Dealer Service 283
- Maintenance Procedures 284
  - Engine Oil 284
  - Engine Oil Filter 288
  - Drive Belts — Check Condition And Tension . . 288
  - Spark Plugs 289
  - Engine Air Cleaner Filter 289
  - Fuel Filter 289
  - Catalytic Converter 290
  - Maintenance-Free Battery 291
  - Air Conditioner Maintenance 293
  - Power Steering — Fluid Check 294
  - Front & Rear Suspension Ball Joints 295

Downloaded from www.Manualslib.com manuals search engine

- Steering Shaft Seal 295
- Steering Linkage 295
- Drive Shaft Universal Joints 295
- Body Lubrication 296
- Windshield Wiper Blades 296
- Windshield And Rear Window Washers 297
- Exhaust System 297
- Cooling System 298
- Hoses And Vacuum/Vapor Harnesses 303
- Brakes 304
- Master Cylinder — ABS Brakes Brake Fluid Level Check 305
- Fuel System Hoses 306
- Automatic Transmission 307
- All Wheel Drive (AWD) — If Equipped 310
- Front And Rear Wheel Bearings 311
- Appearance Care And Protection From Corrosion 311
- Cleaning The Center Console Cup Holders . . . 316

■ Integrated Power Module (IPM) 316

■ Vehicle Storage 319

■ Replacement Light Bulbs 320

■ Bulb Replacement 321
- Standard Quad Headlights 321
- High Intensity Discharge Headlights (HID) — If Equipped 322

Downloaded from www.Manualslib.com manuals search engine

□ Front Park/Turn Signal And Sidemarker Lights 322
□ Front Fog Light 323
□ Rear Tail, Stop, Turn Signal, Side Marker And Back-Up Lights 324
□ License Light 324
■ Fluids And Capacities 325
■ Recommended Fluids, Lubricants And Genuine Parts 326
□ Engine 326
□ Chassis 327

Downloaded from www.Manualslib.com manuals search engine

3.5L ENGINE

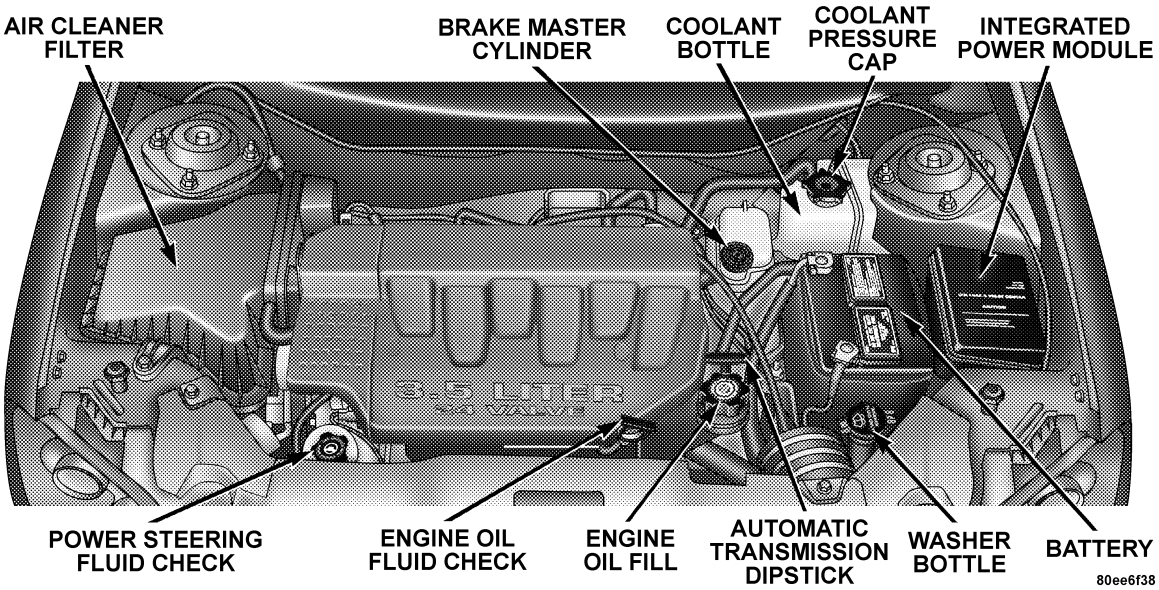

Downloaded from www.Manualslib.com manuals search engine

ONBOARD DIAGNOSTIC SYSTEM — OBD II

Your vehicle is equipped with a sophisticated onboard diagnostic system called OBD II. This system monitors the performance of the emissions, engine, and automatic transmission control systems. When these systems are operating properly, your vehicle will provide excellent performance and fuel economy, as well as engine emissions well within current government regulations.

If any of these systems require service, the OBD II system will turn on the "Malfunction Indicator Light." It will also store diagnostic codes and other information to assist your service technician in making repairs. Although your vehicle will usually be drivable and not need towing, see your dealer for service as soon as possible.

CAUTION!

- **Prolonged driving with the "Malfunction Indicator Light" on could cause further damage to the emission control system. It could also affect fuel economy and driveability. The vehicle must be serviced before any emissions tests can be performed.**
- **If the "Malfunction Indicator Light" is flashing while the engine is running, severe catalytic converter damage and power loss will soon occur. Immediate service is required.**

Downloaded from www.Manualslib.com manuals search engine

EMISSIONS INSPECTION AND MAINTENANCE PROGRAMS

In some localities, it may be a legal requirement to pass an inspection of your vehicle's emissions control system. Failure to pass could prevent vehicle registration.

For states which have an I/M (Inspection and Maintenance) requirement, this check verifies the following: the MIL (Malfunction Indicator Lamp) is functioning and is not on when the engine is running, and that the OBD (On Board Diagnostic) system is ready for testing.

Normally, the OBD system will be ready. The OBD system may **not** be ready if your vehicle was recently serviced, if you recently had a dead battery, or a battery replacement. If the OBD system should be determined not ready for the I/M test, your vehicle may fail the test.

Your vehicle has a simple ignition key actuated test which you can use prior to going to the test station. To check if your vehicle's OBD system is ready, you must do the following:

1. Insert your ignition key into the ignition switch.

2. Turn the ignition to the ON position, but do not crank or start the engine.

3. If you crank or start the engine, you will have to start this test over.

4. As soon as you turn your key to the ON position, you will see your MIL symbol come on as part of a normal bulb check.

5. Approximately 15 seconds later, one of two things will happen:

   a. The MIL will flash for about 10 seconds and then return to being fully illuminated until you turn off the

Downloaded from www.Manualslib.com manuals search engine

ignition key or start the engine. This means that your vehicle's OBD system is **not ready** and you should **not** proceed to the I/M station.

b. The MIL will not flash at all and will remain fully illuminated until you turn off the ignition key or start the engine. This means that your vehicle's OBD system is **ready** and you can proceed to the I/M station.

If your OBD system is **not ready,** you should see your authorized dealer or repair facility. If your vehicle was recently serviced or had a battery failure or replacement, you may need to do nothing more than drive your vehicle as you normally would in order for your OBD system to update. A recheck with the above test routine may then indicate that the system is now ready.

Regardless of whether your vehicle's OBD system is ready or not ready, if the MIL symbol is illuminated during normal vehicle operation, you should have your vehicle serviced before going to the I/M station. The I/M station can fail your vehicle because the MIL symbol is on with the engine running.

REPLACEMENT PARTS

Use of genuine Mopar® parts for normal/scheduled maintenance and repairs is highly recommended to insure the designed performance. Damage or failures caused by the use of non-Mopar® parts for maintenance and repairs will not be covered by the manufacturer's warranty.

DEALER SERVICE

Your dealer has the qualified service personnel, special tools and equipment to perform all service operations in an expert manner. Service Manuals are available which include detailed service information for your vehicle. Refer to these manuals before attempting any procedure yourself.

Downloaded from www.Manualslib.com manuals search engine

NOTE: Intentional tampering with emissions control systems can result in civil penalties being assessed against you.

WARNING!

You can be badly injured working on or around a motor vehicle. Do only that service work for which you have the knowledge and the proper equipment. If you have any doubt about your ability to perform a service job, take your vehicle to a competent mechanic.

MAINTENANCE PROCEDURES

The pages that follow contain the **required** maintenance services determined by the engineers who designed your vehicle.

Besides the maintenance items for which there are fixed maintenance intervals, there are other items that should operate satisfactorily without periodic maintenance. However, if a malfunction of these items does occur, it could adversely affect the engine or vehicle performance. These items should be inspected if a malfunction is observed or suspected.

Engine Oil

Checking Oil Level

To assure proper engine lubrication, the engine oil must be maintained at the correct level. Check the oil level at regular intervals, such as every fuel stop.

Downloaded from www.Manualslib.com manuals search engine

The best time to check the engine oil level is about 5 minutes after a fully warmed engine is shut off or before starting the engine after it has sat overnight.

Checking the oil while the vehicle is on level ground will improve the accuracy of the oil level readings. Maintain the oil level between the MIN and MAX markings on the dipstick. Adding one quart of oil when the reading is at the MIN mark will result in a MAX reading on these engines.

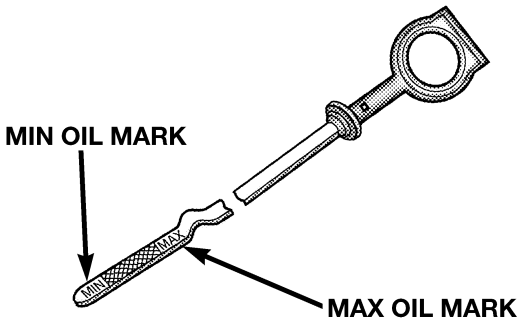

809744ab

CAUTION!

Overfilling or underfilling will cause oil aeration or loss of oil pressure. This could damage your engine.

Downloaded from www.Manualslib.com manuals search engine

Change Engine Oil

Road conditions and your kind of driving affects the interval at which your oil should be changed. Check the following list to see if any apply to you.

- Day or night temperatures are below 32°F (0°C).
- Stop and Go driving.
- Extensive engine idling.
- Driving in dusty conditions.
- Short trips of less than 10 miles (16 km).
- More than 50% of your driving is at sustained high speeds during hot weather, above 90°F (32°C).
- Trailer towing.
- Taxi, Police or delivery service (commercial service).
- Off-Road or desert operation.

NOTE: If **ANY** of these apply to you then change your engine oil every 3,000 miles (5 000 km) or 3 months, whichever comes first and follow schedule "B" of the "Maintenance Schedules" section of this manual.

If none of these apply to you, then change your engine oil at every interval shown on schedule "A" of the "Maintenance Schedules" section of this manual.

NOTE: Under no circumstances should oil change intervals exceed 6000 miles (10 000 km) or 6 months whichever comes first.

Engine Oil Selection

For best performance and maximum protection under all types of operating conditions, the manufacturer only recommends engine oils that are API certified and meet the requirements of DaimlerChrysler Material Standard MS-6395.

Downloaded from www.Manualslib.com manuals search engine

American Petroleum Institute (API) Engine Oil Identification Symbol

This symbol means that the oil has been certified by the American Petroleum Institute (API). The manufacturer only recommends API Certified engine oils.

Engine Oil Viscosity Chart

The proper SAE viscosity grade of engine oil should be selected based on the following recommendation and be within the operating temperature shown in the engine oil viscosity chart.

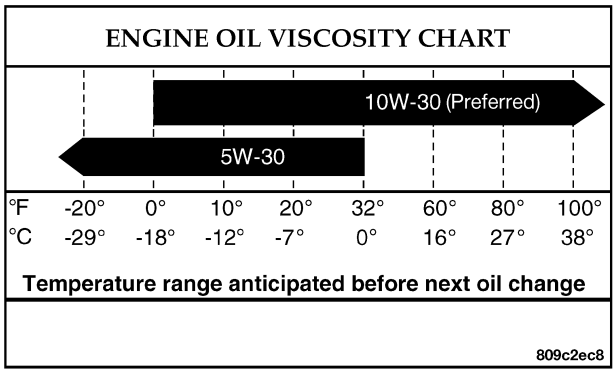

- **SAE 10W-30** engine oil is preferred. SAE 5W-30 engine oil is allowed during cold weather only to improve cold weather starting.

Lubricants which do not have both, the engine oil certification mark and the correct SAE viscosity grade number should not be used.

Downloaded from www.Manualslib.com manuals search engine

Synthetic Engine Oils

You may use synthetic engine oils provided that the recommended oil quality requirements are met and the recommended maintenance intervals for oil and filter changes are followed.

Materials Added to Engine Oil

The manufacture strongly recommends against the addition of any additives (other than leak detection dyes) to the engine oil. Engine oil is an engineered product and it's performance may be impaired by supplemental additives.

Disposing of Used Engine Oil And Oil Filters

Care should be taken in disposing of used engine oil and oil filters from your vehicle. Used oil and oil filters, indiscriminately discarded, can present a problem to the environment. Contact your dealer, service station, or governmental agency for advice on how and where used oil and oil filters can be safely discarded in your area.

Engine Oil Filter

The engine oil filter should be replaced at every engine oil change.

Engine Oil Filter Selection

This manufacture's engines have a full-flow type oil filter. Use a filter of this type for replacement. The quality of replacement filters varies considerably. Only high quality filters should be used to assure most efficient service. Mopar Engine Oil Filters are a high quality oil filter and are recommended.

Drive Belts — Check Condition and Tension

At the mileage indicated in the maintenance schedule, all belts should be checked for condition and proper tension. Improper belt tension can cause belt slippage and failure.

Belts should be inspected for evidence of cuts, cracks, or glazing, and replaced if there is indication of damage which could result in belt failure. Low generator belt tension can cause battery failure.

Downloaded from www.Manualslib.com manuals search engine

Also check belt routing to make sure there is no interference between the belts and other engine components.

Spark Plugs

Spark plugs must fire properly to assure engine performance and emission control. New plugs should be installed at the specified mileage. The entire set should be replaced if there is any malfunction due to a faulty spark plug. Malfunctioning spark plugs can damage the catalytic converter. For proper type of replacement spark plugs, refer to the "Vehicle Emission Control Information" label in the engine compartment.

Engine Air Cleaner Filter

Under normal driving conditions, replace the air filter at the intervals shown on Schedule "A". If, however, you drive the vehicle frequently under dusty or severe conditions, the filter element should be inspected periodically and replaced if necessary at the intervals shown on Schedule "B".

WARNING!

The air cleaner can provide a measure of protection in the case of engine backfire. Do not remove the air cleaner unless such removal is necessary for repair or maintenance. Make sure that no one is near the engine compartment before starting the vehicle with the air cleaner removed. Failure to do so can result in serious personal injury.

Fuel Filter

A plugged fuel filter can cause stalling, limit the speed at which a vehicle can be driven or cause hard starting. Should an excessive amount of dirt accumulate in the fuel tank, filter replacement may be necessary. See your local dealer for service.

Downloaded from www.Manualslib.com manuals search engine

Catalytic Converter

The catalytic converter requires the use of unleaded fuel only. Leaded gasoline will destroy the effectiveness of the catalyst as an emission control device.

Under normal operating conditions, the catalytic converter will not require maintenance. However, it is important to keep the engine properly tuned to assure proper catalyst operation and prevent possible catalyst damage.

CAUTION!

Damage to the catalytic converter can result if your vehicle is not kept in proper operating condition. In the event of engine malfunction, particularly involving engine misfire or other apparent loss of performance, have your vehicle serviced promptly. Continued operation of your vehicle with a severe malfunction could cause the converter to overheat, resulting in possible damage to the converter and the vehicle.

NOTE: Intentional tampering with emissions control systems can result in civil penalties being assessed against you.

Downloaded from www.Manualslib.com manuals search engine

WARNING!

A hot exhaust system can start a fire if you park over materials that can burn. Such materials might be grass or leaves coming into contact with your exhaust system. Do not park or operate your vehicle in areas where your exhaust system can contact anything that can burn.

In unusual situations involving grossly malfunctioning engine operation, a scorching odor may indicate severe and abnormal catalyst overheating. If this occurs, the vehicle should be stopped, the engine shut off and the vehicle allowed to cool. Thereafter, service, including a tune-up to manufacturer's specifications, should be obtained immediately.

To minimize the possibility of catalyst damage:

- Do not shut off the engine or interrupt the ignition when the transmission is in gear and the vehicle is in motion.
- Do not try to start engine by pushing or towing the vehicle.
- Do not idle the engine with any spark plug wires disconnected or removed, such as when diagnostic testing, or for prolonged periods during very rough idling or malfunctioning operating conditions.

Maintenance-Free Battery

The top of the MAINTENANCE-FREE battery is permanently sealed. You will never have to add water, nor is periodic maintenance required.

Downloaded from www.Manualslib.com manuals search engine

WARNING!

- Battery fluid is a corrosive acid solution and can burn or even blind you. Don't allow battery fluid to contact your eyes, skin or clothing. Don't lean over a battery when attaching clamps. If acid splashes in eyes or on skin, flush the area immediately with large amounts of water.
- Battery gas is flammable and explosive. Keep flame or sparks away from the battery. Don't use a booster battery or any other booster source with an output greater than 12 volts. Don't allow cable clamps to touch each other.
- Battery posts, terminals and related accessories contain lead and lead compounds. Wash hands after handling.

CAUTION!

- It is essential when replacing the cables on the battery that the positive cable is attached to the positive post and the negative cable is attached to the negative post. Battery posts are marked positive (+) and negative (-) and identified on the battery case. Cable clamps should be tight on the terminal posts and free of corrosion.
- If a "fast charger" is used while battery is in vehicle, disconnect both vehicle battery cables before connecting the charger to battery. Do not use a "fast charger" to provide starting voltage.

Downloaded from www.Manualslib.com manuals search engine

Air Conditioner Maintenance

For best possible performance, your air conditioner should be checked and serviced by an Authorized Dealer at the start of each warm season. This service should include cleaning of the condenser fins and a system performance check. Drive belt tension should also be checked at this time.

WARNING!

- **Use only refrigerants approved by the manufacturer for your air conditioning system. Some unapproved refrigerants are flammable and can explode, injuring you. Other unapproved refrigerants can cause the system to fail, requiring costly repairs.**
- **The air conditioning system contains refrigerant under high pressure. To avoid risk of personal injury or damage to the system, adding refrigerant or any repair requiring lines to be disconnected should be done by an experienced repairman.**

Downloaded from www.Manualslib.com manuals search engine

Refrigerant Recovery And Recycling
R-134a Air Conditioning Refrigerant is a hydrofluorocarbon (HFC) that is endorsed by the Environmental Protection Agency and is an ozone-saving product. However, the manufacturer recommends that air conditioning service be performed by dealers or other service facilities using recovery and recycling equipment.

NOTE: Air Conditioning systems found to be contaminated with A/C System Sealers, Stop Leak Products, Seal Conditioners, Compressor Oil, or Refrigerants not approved by the manufacturer, voids the warranty for the Air Conditioning system.

A/C Air Filter
The filter access door is located under the instrument panel on the passenger side. To replace the filter slide the lock toward the rear of the vehicle (unlock position). Remove the access door and pull the filter downward. When installing a new filter, ensure its proper orientation. Align the black arrow on the bottom of the filter frame with the direction of airflow (away from the blower motor and towards the center of the car).

Refer to the "Maintenance Schedules" section of this manual for the recommended air conditioning filter replacement intervals.

Power Steering — Fluid Check
Checking the power steering fluid level at a defined service interval is not required. The fluid should only be checked if a leak is suspected, abnormal noises are apparent, and/or the system is not functioning as anticipated. Coordinate inspection efforts through a certified DaimlerChrysler Dealership."

Downloaded from www.Manualslib.com manuals search engine

WARNING!

Fluid level should be checked on a level surface and with the engine off to prevent injury from moving parts and to insure accurate fluid level reading. Do not overfill. Use only manufacturers recommended power steering fluid.

If necessary, add fluid to restore to the proper indicated level. With a clean cloth, wipe any spilled fluid from all surfaces. Refer to Recommended Fluids, Lubricants, and Genuine Parts for correct fluid type.

Front & Rear Suspension Ball Joints

The suspension ball joints are permanently sealed. No regular maintenance is required for these components.

Steering Shaft Seal

The steering shaft seal, at the point where the shaft passes through the bulkhead, is lubricated when it is installed. If the seal becomes noisy when the steering shaft is turned, it should be lubricated with a multi-purpose grease. Mopar multi-purpose lubricant is recommended.

Steering Linkage

The tie rod end ball joints are permanently lubricated and do not require periodic maintenance.

Drive Shaft Universal Joints

Your vehicle has constant velocity universal joints. Periodic lubrication of these joints is not required. However, the joint boots should be inspected for external leakage or damage when other maintenance is performed. If leakage or damage is evident, the universal joint boot and grease should be replaced immediately.

Downloaded from www.Manualslib.com manuals search engine

Continued operation could result in failure of the universal joint due to water and dirt contamination of the grease. This would require complete replacement of the joint assembly.

Body Lubrication

Locks and all body pivot points, including such items as seat tracks, doors, liftgate and hood hinges, should be lubricated periodically to assure quiet, easy operation and to protect against rust and wear. Prior to the application of any lubricant, the parts concerned should be wiped clean to remove dust and grit; after lubricating excess oil and grease should be removed. Particular attention should also be given to hood latching components to insure proper function. When performing other underhood services, the hood latch, release mechanism and safety catch should be cleaned and lubricated.

The external lock cylinders should be lubricated twice a year, preferably in the fall and spring. Apply a small amount of a high quality lubricant such as Mopar® Lock Cylinder Lubricant directly into the lock cylinder.

Windshield Wiper Blades

The rubber edges of the wiper blades and the windshield should be cleaned periodically with a sponge or soft cloth and a mild nonabrasive cleaner. This will remove accumulations of salt or road film.

Operation of the wipers on dry glass for long periods may cause deterioration of the wiper blades. Always use washer fluid when using the wipers to remove salt or dirt from a dry windshield.

Avoid using the wiper blades to remove frost or ice from the windshield. Keep the blade rubber out of contact with petroleum products such as engine oil, gasoline, etc.

Downloaded from www.Manualslib.com manuals search engine

Windshield and Rear Window Washers

The fluid reservoir for the windshield washers and the rear window washer is shared. It is located in the engine compartment and should be checked for fluid level at regular intervals. Fill the reservoir with windshield washer solvent (not radiator antifreeze) and operate the system for a few seconds to flush out the residual water.

The washer fluid reservoir will hold a full gallon of fluid when the Low Washer Fluid Light illuminates.

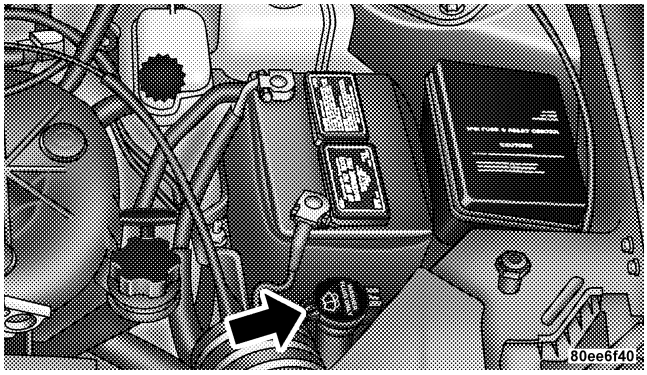

Exhaust System

The best protection against carbon monoxide entry into the vehicle body is a properly maintained engine exhaust system.

Whenever a change is noticed in the sound of the exhaust system, when exhaust fumes can be detected inside the vehicle, or when the underside or rear of the vehicle is

Downloaded from www.Manualslib.com manuals search engine

damaged, have a competent mechanic inspect the complete exhaust system and adjacent body areas for broken, damaged, deteriorated, or mispositioned parts. Open seams or loose connections could permit exhaust fumes to seep into the passenger compartment. In addition, inspect the exhaust system each time the vehicle is raised for lubrication or oil change. Replace as required.

WARNING!

Exhaust gases can injure or kill. They contain carbon monoxide (CO) which is colorless and odorless. Breathing it can make you unconscious and can eventually poison you. To avoid breathing CO, follow the preceding safety tips.

Cooling System

Inspection

WARNING!

- **When working near the radiator cooling fan, turn the ignition key to the OFF position. The fan is temperature controlled and can start at any time when the ignition key is in the ON position.**
- **You or others can be badly burned by hot coolant or steam from your radiator. If you see or hear steam coming from under the hood, don't open the hood until the radiator has had time to cool. Never try to open a cooling system pressure cap when the radiator is hot.**

Downloaded from www.Manualslib.com manuals search engine

Coolant Checks

Coolant protection checks should be made every 12 months (prior to the onset of freezing weather, where applicable). If coolant is dirty or rusty in appearance, the system should be drained, flushed and refilled with fresh coolant. Check the front of the A/C condenser for any accumulation of bugs, leaves, etc. If dirty, clean by gently spraying water from a garden hose vertically down the face of the condenser.

Check the cooling system hoses for brittle rubber, cracking, tears, cuts and tightness of the connection at the bottle and radiator. Inspect the entire system for leaks.

Cooling System — Drain, Flush and Refill

At the intervals shown in the appropriate maintenance schedule, the system should be drained, flushed and refilled.

If the solution is dirty or contains a considerable amount of sediment, clean and flush with a reliable cooling system cleaner. Follow with a thorough rinsing to remove all deposits and chemicals. Properly dispose of old antifreeze solution.

Selection Of Coolant

Use only the manufacturers recommended coolant, refer to Recommended Fluids, Lubricants and Genuine Parts for correct coolant type.

Downloaded from www.Manualslib.com manuals search engine

CAUTION!

- **Mixing of coolants other than the specified HOAT coolant may result in decreased corrosion protection and engine damage that may not be covered under the new vehicle warranty. If a non-HOAT coolant is introduced into the cooling system in an emergency, it should be replaced with the specified coolant as soon as possible.**
- **Do not use plain water alone or alcohol base antifreeze products. Do not use additional rust inhibitors or antirust products, as they may not be compatible with the radiator coolant and may plug the radiator.**
- **This vehicle has not been designed for use with Propylene Glycol based coolants. Use of Propylene Glycol based coolants is not recommended.**

Adding Coolant

When adding coolant, or refilling the system, a minimum of 50% solution of ethylene glycol antifreeze coolant in water should be used. Higher concentrations (not to exceed 70%) are required if temperatures below −37°F (−38°C) are anticipated.

Use only high purity water such as distilled or deionized water when mixing the water/antifreeze solution. The use of lower quality water will reduce the amount of corrosion protection in the engine cooling system.

Please note that it is the owner's responsibility to maintain the proper level of protection against freezing according to the temperatures occurring in the area where the vehicle is operated.

NOTE: Mixing coolant types will decrease the life of the engine coolant and will require more frequent coolant changes.

Downloaded from www.Manualslib.com manuals search engine

Coolant Pressure Cap

The coolant pressure cap must be fully tightened to prevent loss of coolant, and to insure that coolant will return to the coolant bottle from the overflow tank. The coolant pressure cap should be inspected and cleaned if there is any accumulation of foreign material on the sealing surfaces.

WARNING!

- **The warning words "DO NOT OPEN HOT" on the coolant pressure cap are a safety precaution. Never add coolant to the cooling system when the engine is overheated. Do not loosen or remove the coolant pressure cap to cool an overheated engine. Heat causes pressure to build up in the cooling system. To prevent scalding or injury, do not remove the coolant pressure cap while the system is hot or under pressure.**
- **Do not use a pressure cap other than the one specified for your vehicle. Personal injury or engine damage may result.**

Disposal of Used Engine Coolant

Used ethylene glycol based engine coolant is a regulated substance requiring proper disposal. Check with your local authorities to determine the disposal rules for your

Downloaded from www.Manualslib.com manuals search engine

community. To prevent ingestion by animals or children do not store ethylene glycol based engine coolant in open containers or allow it to remain in puddles on the ground. If ingested by a child, contact a physician immediately. Clean up any ground spills immediately.

Coolant Level

The coolant bottle provides a quick visual method for determining that the coolant level is adequate. With the engine off and cold, the coolant level should be between the ranges indicated on the bottle. Some darkening of the coolant bottle will occur over time. This is normal.

When additional coolant is needed to maintain the proper level, it should be added to the coolant bottle. Do not overfill. When filling the cooling system, utilize the bleed valve located on the top of the radiator in the engine compartment on the passengers side. Use the bleed valve to bleed air when the system is cold and the pressure cap is removed from the coolant bottle.

Points to Remember

NOTE: When the vehicle is stopped after a few miles of operation, you may observe vapor coming from the front of the engine compartment. This is normally a result of moisture from rain, snow, or high humidity accumulating on the radiator and being vaporized when the thermostat opens, allowing hot water to enter the radiator.

If an examination of your engine compartment shows no evidence of radiator or hose leaks, the vehicle may be safely driven. The vapor will soon dissipate.

- Do not overfill the coolant bottle.
- Check coolant freeze point in the system.
- If frequent coolant additions are required, the cooling system should be pressure tested for leaks.

Downloaded from www.Manualslib.com manuals search engine

- Maintain coolant concentration at 50% ethylene glycol antifreeze (minimum) in water for proper corrosion protection of your engine which contains aluminum components.
- Make sure that the radiator and coolant bottle hoses are not kinked or obstructed.
- Keep the front of the radiator and the front of the A/C condenser clean.
- Do not change the thermostat for summer or winter operation. If replacement is ever necessary, install ONLY the correct type thermostat. Other designs may result in unsatisfactory cooling performance.
- Increasing engine speed at idle does not reduce coolant temperature! Put transmission in NEUTRAL and let engine idle at normal engine idle speed.

Hoses And Vacuum/Vapor Harnesses

Inspect surfaces of hoses and nylon tubing for evidence of heat and mechanical damage. Hard or soft spots, brittle rubber, cracking, tears, cuts, abrasions, and excessive swelling indicate deterioration of the rubber.

Pay particular attention to those hoses nearest to high heat sources such as the exhaust manifold. Inspect hose routing to be sure hoses do not come in contact with any heat source or moving component which may cause heat damage or mechanical wear.

Insure nylon tubing in these areas has not melted or collapsed.

Inspect all hose connections such as clamps and couplings to make sure they are secure and no leaks are present.

Components should be replaced immediately if there is any evidence of wear or damage that could cause failure.

Downloaded from www.Manualslib.com manuals search engine

Brakes

In order to assure brake system performance, all brake system components should be inspected periodically. Suggested service intervals can be found in the Maintenance Schedules.

WARNING!

Riding the brakes can lead to brake failure and possibly an accident. Driving with your foot resting or riding on the brake pedal can result in abnormally high brake temperatures, excessive lining wear, and possible brake damage. You wouldn't have your full braking capacity in an emergency.

Brake And Power Steering Hoses

When the vehicle is serviced for scheduled maintenance, inspect surface of hoses and nylon tubing for evidence of heat and mechanical damage. Hard and brittle rubber, cracking, tears, cuts, abrasion, and excessive swelling indicate deterioration of the rubber. Particular attention should be made to examining those hose surfaces nearest to high heat sources, such as the exhaust manifold.

Insure nylon tubing in these areas has not melted or collapsed.

Inspect all hose connections such as clamps and couplings to make sure they are secure and no leaks are present.

NOTE: Often, fluid such as oil, power steering fluid, and brake fluid are used during assembly plant operations to facilitate the assembly of hoses to couplings. Therefore, oil wetness at the hose-coupling area is not necessarily an indication of leakage. Actual dripping of hot fluid when systems are under pressure (during vehicle operation), should be noted before a hose is replaced based on leakage.

Downloaded from www.Manualslib.com manuals search engine

NOTE: Inspection of brake hoses should be performed whenever the brake system is serviced and at every engine oil change. Inspect hydraulic brake hoses for surface cracking, scuffing, or worn spots. If there is any evidence of cracking, scuffing, or worn spots, the hose should be replaced immediately! Eventual deterioration of the hose can take place resulting in a possibility of a burst failure.

WARNING!
Worn brake hoses can burst and cause brake failure. You could have an accident. If you see any signs of cracking, scuffing, or worn spots, have the brake hoses replaced immediately.

Master Cylinder — ABS Brakes Brake Fluid Level Check

The fluid level in the master cylinder should be checked when performing underhood services, or immediately if the brake system warning light indicates system failure.

Clean the top of the master cylinder area before removing the cap. Add fluid to bring the level up to the top of the "FULL" mark on the side of the master cylinder reservoir.

Overfilling of fluid is not recommended because it may cause leaking in the system.

Add enough fluid to bring the level up to the requirements described on the brake fluid reservoir. With disc brakes, fluid level can be expected to fall as the brake pads wear. However, low fluid level may be caused by a leak and a checkup may be needed.

Downloaded from www.Manualslib.com manuals search engine

Use only manufacturers recommended brake fluid, refer to Recommended Fluids, Lubricants and Genuine Parts for correct fluid type.

WARNING!

- **Overfilling the brake fluid reservoir can result in spilling brake fluid on hot engine parts and the brake fluid catching fire.**
- **Use of brake fluid that may have a lower initial boiling point or unidentified as to specification, may result in sudden brake failure during hard prolonged braking. You could have an accident.**

Use only brake fluid that has been in a tightly closed container to avoid contamination from foreign matter or moisture.

CAUTION!

Do not allow petroleum base fluid to contaminate the brake fluid, all brake seal components could be damaged causing partial or complete brake failure.

Fuel System Hoses

Electronic Fuel Injection high pressure fuel systems are designed with hoses and quick connect fittings which have unique material characteristics to provide adequate sealing and resist attack by deteriorated gasoline.

You are urged to use only the manufacture specified hoses with quick connect fittings, or their equivalent in material and specification, in any fuel system servicing. It is mandatory to replace any damaged hoses or quick connect fittings that have been removed during service.

Downloaded from www.Manualslib.com manuals search engine

Care should be taken in installing quick connect fittings to insure they are properly installed and fully connected. See your authorized dealer for service.

Automatic Transmission

The automatic transmission and differential assembly are contained within a single housing.

All automatic transmissions are equipped with a conventional filler tube and dipstick. If fluid is added, it should be added through the dipstick hole in the case.

The dipstick is located just behind the radiator, lower right side.

Selection of Lubricant

It is important that the proper lubricant is used in the transmission to assure optimum transmission performance. Use only manufacturers recommended transmission fluid, refer to Recommended Fluids, Lubricants and Genuine Parts for correct fluid type. It is important that the transmission fluid be maintained at the prescribed level using the recommended fluid.

CAUTION!

Using a transmission fluid other than the manufacturers recommended fluid may cause deterioration in transmission shift quality and/or torque converter shudder. Using a transmission fluid other than the manufacturers recommended fluid will result in more frequent fluid and filter changes. Refer to Recommended Fluids, Lubricants and Genuine Parts for correct fluid type.

Downloaded from www.Manualslib.com manuals search engine

4 SPEED DIPSTICK

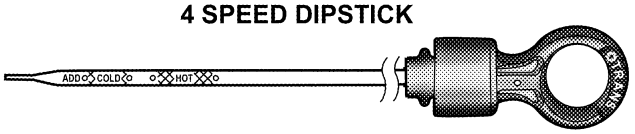

80f34e48

Procedure For Checking Fluid Level

The fluid level in the automatic transmission should be checked whenever the vehicle is serviced. Operation with an improper fluid level will greatly reduce the life of the transmission and of the fluid.

To properly check the automatic transmission fluid level, the following procedure must be used:

1. The vehicle must be on level ground.

2. The engine should be running at curb idle speed for a minimum of 60 seconds.

3. Fully apply parking brake.

4. Place the gear selector momentarily in each gear position ending with the lever in P (PARK). Wipe the area around the dipstick clean to eliminate the possibility of dirt entering the transmission.

5. Remove the dipstick and determine if the fluid is hot or warm. Hot fluid is approximately 180°F (82°C), which is the normal operating temperature after the vehicle has been driven at least 15 miles (24 km). The fluid cannot be comfortably held between the finger tips. Cold is when the fluid is below 80°F (27°C).

6. Wipe the dipstick clean and reinsert until seated. Remove dipstick and note reading.

   a. If the fluid is hot, the reading should be in the crosshatched area marked “HOT” (between the upper two holes in the dipstick).

Downloaded from www.Manualslib.com manuals search engine

b. If the fluid is cold, the fluid level should be between the lower two holes in the area marked "COLD".

If the fluid level indicates low, add sufficient fluid to bring to the proper level.

CAUTION!

Do not overfill. Dirt and water in the transmission can cause serious damage. To prevent dirt and water from entering the transmission after checking or replenishing fluid, make certain that the dipstick cap is reseated properly.

Fluid and Filter Changes

Automatic transmission fluid should be changed on all transmissions as follows:

Normal Usage — No change necessary

Severe Usage (fluid and filter) — 60,000 miles (96 000 km)

Severe Usage is defined as:

- Police, taxi, limousine, commercial type operation, or trailer towing where the vehicle driven regularly for more than 45 minutes of continuous operation.

NOTE: Refer to Section 8 of this manual for Maintenance Schedules.

If the transmission is disassembled for any reason, the fluid and filter should be changed.

Special Additives

Do not add any fluid additives to the transmission. The only exception to this policy is the use of special dyes to aid in detecting fluid leaks. The use of transmission sealers should be avoided as they may adversely affect seals.

Downloaded from www.Manualslib.com manuals search engine

All Wheel Drive (AWD) — If Equipped

Under normal operating conditions, periodic fluid level checks and lubricant changes for the Power Transfer Unit, Overrunning Clutch and Rear Carrier, are not required. However when the vehicle is serviced for other reasons, the exterior surface of these components should be inspected for evidence of fluid leaks. Confirmed leaks should be repaired as soon as possible.

Power Transfer Unit

The fill plug is located on the side of the power transfer unit housing. The fluid should be maintained at a level even with the bottom of the fill plug hole when the vehicle is parked on a level surface. If it becomes necessary to add or replace the fluid, use only the manufacturers recommended fluid, refer to Recommended Fluids, Lubricants and Genuine Parts for correct fluid type.

Overrunning Clutch

The fill plug is located on the side of the overrunning clutch housing. The fluid should be maintained at a level even with the bottom of the fill plug hole when the vehicle is parked on a level surface. If it becomes necessary to add or replace the fluid, use only the manufacturers recommended transmission fluid, refer to Recommended Fluids, Lubricants and Genuine Parts for correct fluid type. To assure performance, it is important that the proper lubricant be used.

Rear Carrier

The fill plug is located on the side of the rear carrier housing. The fluid should be maintained at a level even with the bottom of the fill plug hole when the vehicle is parked on a level surface. if it becomes necessary to add or replace the fluid, use only the manufacturers recommended fluid, refer to Recommended Fluids, Lubricants and Genuine Parts for correct fluid type.

Downloaded from www.Manualslib.com manuals search engine

Fluid Changes

The fluid should be changed as follows:

Normal Usage	No Service Required
Severe Usage	
Power Transfer Unit	15,000 miles (24 000 km)
Overrunning Clutch	22,500 miles (36 000 km)
Rear Carrier	22,500 miles (36 000 km)

Severe Usage is defined as:

1. More than 50% of vehicle operation in stop and go traffic where vehicle is driven regularly for more than 45 minutes of continuous operation, such as in heavy city or in construction zone traffic,

2. Police, taxi, limousine, commercial type operation, or trailer towing where the vehicle driven regularly for more than 45 minutes of continuous operation.

Front And Rear Wheel Bearings

Front and rear wheel bearings are permanently sealed. No regular maintenance is required for these components.

Appearance Care and Protection from Corrosion

Protection of Body and Paint from Corrosion

Vehicle body care requirements vary according to geographic locations and usage. Chemicals that make roads passable in snow and ice, and those that are sprayed on trees and road surfaces during other seasons, are highly corrosive to the metal in your vehicle. Outside parking, which exposes your vehicle to airborne contaminants, road surfaces on which the vehicle is operated, extreme hot or cold weather and other extreme conditions will have an adverse effect on paint, metal trim, and underbody protection.

Downloaded from www.Manualslib.com manuals search engine

The following maintenance recommendations will enable you to obtain maximum benefit from the corrosion resistance built into your vehicle.

What Causes Corrosion?
Corrosion is the result of deterioration or removal of paint and protective coatings from your vehicle.

The most common causes are:

- Road salt, dirt and moisture accumulation.
- Stone and gravel impact.
- Insects, tree sap and tar.
- Salt in the air near seacoast localities.
- Atmospheric fallout/industrial pollutants.

Washing

- Wash your vehicle regularly. Always wash your vehicle in the shade using a mild car wash soap, and rinse the panels completely with clear water.
- If insects, tar or other similar deposits have accumulated on your vehicle, wash it as soon as possible.
- Use Mopar auto polish to remove road film and stains and to polish your vehicle. Take care never to scratch the paint.
- Avoid using abrasive compounds and power buffing that may diminish the gloss or thin out the paint finish.

Downloaded from www.Manualslib.com manuals search engine

CAUTION!

Do not use abrasive or strong cleaning materials such as steel wool or scouring powder, which will scratch metal and painted surfaces.

Special Care

- If you drive on salted or dusty roads or if you drive near the ocean, hose off the undercarriage at least once a month.
- It is important that the drain holes in the lower edges of the doors, rocker panels and liftgate be kept clear and open.
- If you detect any stone chips or scratches in the paint, touch them up immediately. The cost of such repairs is considered the responsibility of the owner.
- If your vehicle is damaged due to an accident or similar cause which destroys the paint and protective coating have your vehicle repaired as soon as possible. The cost of such repairs is considered the responsibility of the owner.
- All wheels and wheel trim, especially aluminum and chrome plated wheels should be cleaned regularly with mild soap and water to prevent corrosion. To remove heavy soil, select a nonabrasive, non-acidic cleaner. Do not use scouring pads, steel wool, a bristle brush or metal polishes. Only Mopar cleaners are recommended. Do not use oven cleaner. Avoid automatic car washes that use acidic solutions or harsh brushes that may damage the wheels' protective finish.
- If you carry special cargo such as chemicals, fertilizers, de-icer salt, etc., be sure that such materials are well packaged and sealed.

Downloaded from www.Manualslib.com manuals search engine

- If a lot of driving is done on gravel roads, consider mud or stone shields behind each wheel.
- Use Mopar touch up paint on scratches as soon as possible. Your dealer has touch up paint to match the color of your vehicle.

Interior Care

Use Mopar Fabric Cleaner to clean fabric upholstery and carpeting.

Use Mopar Vinyl Cleaner to clean vinyl upholstery and trim.

Mopar Total Clean is specifically recommended for leather upholstery.

Your leather upholstery can be best preserved by regular cleaning with a damp soft cloth. Small particles of dirt can act as an abrasive and damage the leather upholstery and should be removed promptly with a damp cloth. Stubborn soils can be removed easily with a soft cloth and Mopar Total Clean. Care should be taken to avoid soaking your leather upholstery with any liquid. Please do not use polishes, oils, cleaning fluids, solvents, detergents, or ammonia based cleaners to clean your leather upholstery. Application of a leather conditioner is not required to maintain the original condition.

WARNING!

Do not use volatile solvents for cleaning purposes. Many are potentially flammable, and if used in closed areas they may cause respiratory harm.

Downloaded from www.Manualslib.com manuals search engine

Glass Surfaces
All glass surfaces should be cleaned on a regular basis with any commercial household-type glass cleaner. Never use an abrasive type cleaner. Use caution when cleaning the inside rear window equipped with electric defrosters or the right rear quarter window equipped with the radio antenna. Do not use scrapers or other sharp instruments which may scratch the elements.

When cleaning the rear view mirror, spray cleaner on the towel or rag that you are using. Do not spray cleaner directly on the mirror.

Cleaning Plastic Instrument Cluster Lenses
The lenses in front of the instruments in this vehicle are molded in clear plastic. When cleaning the lenses, care must be taken to avoid scratching the plastic.

1. Clean with a wet soft rag. A mild soap solution may be used, but do not use high alcohol content or abrasive cleaners. If soap is used, wipe clean with a clean damp rag.

2. Dry with a soft tissue.

Seat Belt Maintenance
Do not bleach, dye or clean the belts with chemical solvents or abrasive cleaners. This will weaken the fabric. Sun damage can also weaken the fabric.

If the belts need cleaning, use a mild soap solution or lukewarm water. Do not remove the belts from the car to wash them.

Replace the belts if they appear frayed or worn or if the buckles do not work properly.

Downloaded from www.Manualslib.com manuals search engine

Cleaning The Center Console Cup Holders

Removal
Grab the center of the rubber portion of the cupholder and lift upward.

Cleaning
Soak the rubber cupholder liner in a mixture of medium hot tap water and one teaspoon of mild liquid dish soap. Let soak for approximately one hour. After one hour pull the liner from the water and dip it back into the water about six times. This will loosen any remaining debris. Rinse the liner thoroughly under warm running water. Shake the excess water from the liner and dry the outer surfaces with a clean soft cloth.

Installation
Align the liner in the cupholder and press down firmly.

INTEGRATED POWER MODULE (IPM)

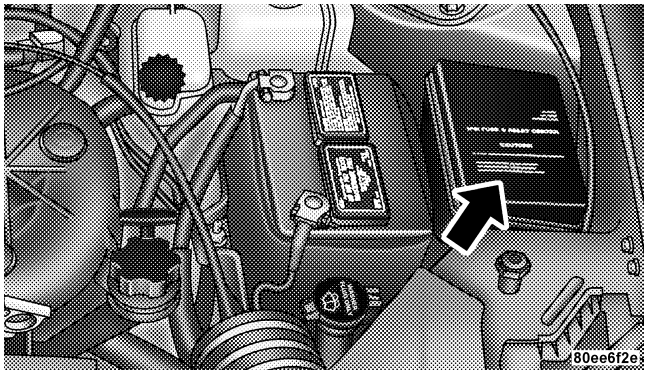

An Integrated Power Module is located in the engine compartment near the battery. This center contains maxi fuses, mini fuses and relays. A label that identifies each component is printed on the inside of the cover.

Downloaded from www.Manualslib.com manuals search engine

Cavity	Maxi Fuse	Description
1	40 Amp Green	Anti-Lock Brake System (ABS) Pump
2	Spare	
3	30 Amp Pink	Ignition Off Draw (IOD)
4	40 Amp Green	Body Control Module (BCM) Feed 1
5	40 Amp Green	Electronic Back Light (EBL)
6	30 Amp Pink	Front Wipers
7	40 Amp Green	Starter
8	40 Amp Green	Power Seat C/B
9	40 Amp Green	Power Sunroof

Cavity	Maxi Fuse	Description
10	Spare	
11	40 Amp Green	Headlight Washer, Power Liftgate
12	Spare	
13	40 Amp Green	Radiator Fan 1
14	Spare	
15	40 Amp Green	Anti-Lock Brake System (ABS) Module
40	40 Amp Green	Driver Door Node
41	40 Amp Green	Passenger Door Node
42	40 Amp Green	Front Blower

Downloaded from www.Manualslib.com manuals search engine

Cavity	Mini Fuse	Description
24	20 Amp Yellow	Power Outlet (Selectable)
25	15 Amp Blue	Radio, Amplifier, Navigation, Hands-Free Phone (HFM), Electronic Vehicle Information Center (EVIC), EC, SNRF, Mirror
26	20 Amp Yellow	Power Outlet
27	Spare	
28	25 Amp Clear	Horn
29	20 Amp Yellow	Cluster, CHMSL, Stop Lights, Anti-Lock Brake System (ABS)
30	10 Amp Red	Ignition Switch
31	20 Amp Yellow	Hazard
34	Spare	
35	Spare	

Cavity	Mini Fuse	Description
36	20 Amp Yellow	Electronic Automatic Transaxle (EATX) Solenoid
37	25 Amp Clear	ASD
38	20 Amp Yellow	Fuel Pump
39	20 Amp Yellow	A/C Clutch, MTV
44	25 Amp Clear	Rear Heated Seats
45	10 Amp Red	Anti-Lock Brake System (ABS) Ignition Run
46	20 Amp Yellow	Passenger Door
47	20 Amp Yellow	Driver Door
48	15 Amp Blue	PLG, OHC, Body Control Module (BCM), Navigation, Hands-Free Phone (HFM)
49	25 Amp Clear	Amplifier
50	15 Amp Blue	HVAC, DVD, RAD, CLK, SKREEM

Downloaded from www.Manualslib.com manuals search engine

CAUTION!

- **When installing the Integrated Power Module cover, it is important to ensure the cover is properly positioned and fully latched. Failure to do so may allow water to get into the Integrated Power Module, and possibly result in a electrical system failure.**
- **When replacing a blown fuse, it is important to use only a fuse having the correct amperage rating. The use of a fuse with a rating other than indicated may result in a dangerous electrical system overload. If a properly rated fuse continues to blow, it indicates a problem in the circuit that must be corrected.**

VEHICLE STORAGE

If you are leaving your vehicle dormant for more than 21 days you may want to take steps to protect your battery. You may:

- Disconnect the negative cable from the battery.
- Anytime you store your vehicle, or keep it out of service (i.e. vacation) for two weeks or more, run the air conditioning system at idle for about five minutes in the fresh air and high blower setting. This will insure adequate system lubrication to minimize the possibility of compressor damage when the system is started again.

Downloaded from www.Manualslib.com manuals search engine

REPLACEMENT LIGHT BULBS

LIGHT BULBS — Interior	Bulb Number
Center & Rear Reading Lights	578
Front Door Courtesy Light	578
Liftgate Light(s)	578
Overhead Console Reading Lights	212–2
Visor Vanity Lights	V26377

NOTE: For lighted switches, see your dealer for replacement instructions.

All of the interior bulbs are glass wedge base or glass cartridge types. Aluminum base bulbs are not approved and should not be used for replacement.

LIGHT BULBS — Exterior	Bulb Number
Back-up	921
Rear Stop, Turn Signal	3157
Rear Sidemarker	168
Fog Light	9045
Front Turn Signal	3157A
Front Sidemarker	194
Standard Headlight	H7
License	168

Downloaded from www.Manualslib.com manuals search engine

BULB REPLACEMENT

Standard Quad Headlights

1. Remove the two screws securing the headlight module to the vehicle and pull the headlight module forward away from the vehicle, disengaging the assembly from the lower attachment clip.

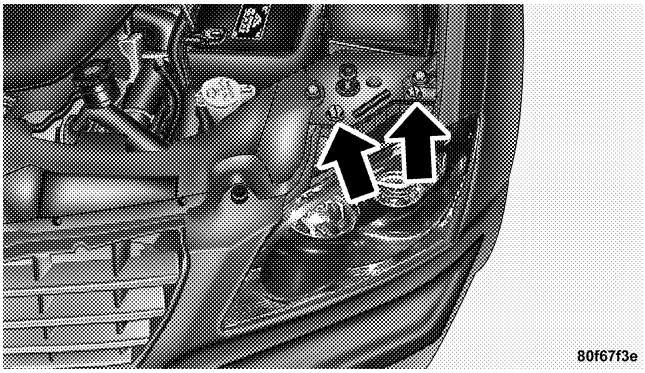

2. Remove the rubber boot seals.

3. Disconnect the electrical connector.

4. Rotate the bulb to the left and replace the bulb. Reinstall the rubber boot seals and then the headlight module.

CAUTION!

Do not touch the new bulb with your fingers. Oil contamination will severely shorten bulb life. If the bulb comes in contact with an oily surface, clean the bulb with rubbing alcohol.

Downloaded from www.Manualslib.com manuals search engine

High Intensity Discharge Headlights (HID) — If Equipped

The headlights are a type of high voltage discharge tube. High voltage can remain in the circuit even with the headlight switch off and the key removed. **Because of this, you should not attempt to service a headlight bulb yourself. If a headlight bulb fails, take your vehicle to an authorized dealer for service.**

WARNING!
A transient high tension occurs at the bulb sockets of High Intensity Discharge (HID) headlights when the headlight switch is turned ON. It may cause serious electrical shock or electrocution if not serviced properly. See your authorized dealer for service.

NOTE: On vehicles equipped with High Intensity Discharge Headlights (HID), when the headlights are turned on there is a blue hue to the lights. This diminishes and becomes more white after approximately 10 seconds, as the system charges.

Front Park/Turn Signal and Sidemarker Lights

1. Remove the two screws securing the headlight module to the vehicle and pull the headlight module forward away from the vehicle, disengaging the assembly from the lower attachment clip.

Downloaded from www.Manualslib.com manuals search engine

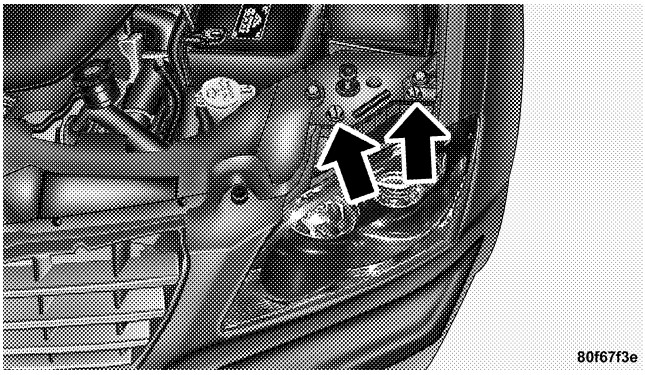

2. Twist the bulb socket to remove from the headlight module and pull the bulb from socket.

3. Replace the bulb, reinstall the socket and then reinstall the headlight module.

Front Fog Light

1. Remove the screw from the front of the fog light and pull out from the front of the fascia.

2. Twist the front fog light bulb to remove from the fog light module.

3. Disconnect the electrical connector and replace the bulb.

CAUTION!

Do not touch the new bulb with your fingers. Oil contamination will severely shorten bulb life. If the bulb comes in contact with an oily surface, clean the bulb with rubbing alcohol.

Downloaded from www.Manualslib.com manuals search engine

Rear Tail, Stop, Turn Signal, Side Marker and Back-up Lights

1. Raise the liftgate.

2. Remove the two tail light assembly screws and rotate the assembly outward to remove the ball stud form the attaching grommet.

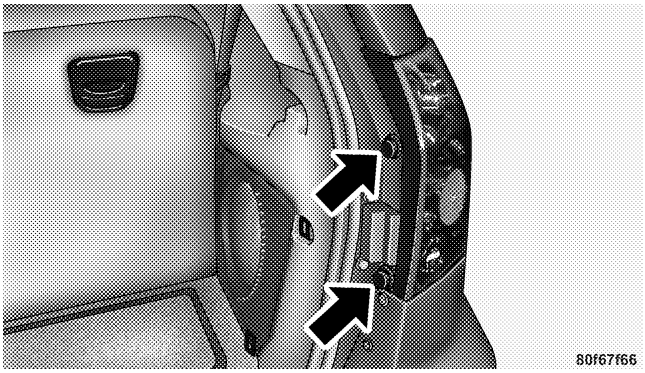

3. Twist the socket assembly to remove it from the housing.

4. Pull the bulb out of the socket.

5. Replace the bulb, reinstall the socket, and reattach the tail light assembly.

License Light

1. Place a screwdriver in the slot next to the release tab and push on the release tab to remove the lens.

2. Pull the bulb out of the socket. Replace the bulb and push on the lens until it snaps into place.

Downloaded from www.Manualslib.com manuals search engine

FLUIDS AND CAPACITIES

		U.S.	Metric
Fuel (approximate) 89 Octane		23 gallons	87 liters
Engine Oil-With Filter			
	3.5 Liter Engines (SAE 10W-30, API Certified)	5.5 qts	5.2 liters
Cooling System *			
	3.5 Liter Engines (Mopar® Antifreeze/Coolant 5 Year/100,000 Mile Formula)	10.5 qts	9.9 liters

* Includes heater and coolant recovery bottle filled to MAX level.

Downloaded from www.Manualslib.com manuals search engine

RECOMMENDED FLUIDS, LUBRICANTS AND GENUINE PARTS

Engine

Component	Fluids, Lubricants and Genuine Parts
Engine Coolant	Mopar® Antifreeze/Coolant 5 Year/100,000 Mile Formula HOAT (Hybrid Organic Additive Technology)
Engine Oil	Use API Certified. SAE 10W-30 is preferred, refer to oil viscosity chart for correct SAE grade meeting DaimlerChrysler Material Standard MS-6395.
Spark Plugs	Refer to the Vehicle Emission Control Information label in the engine compartment.
Oil Filter	Mopar® 5281090 or equiv.
Fuel Selection	89 Octane

Downloaded from www.Manualslib.com manuals search engine

Chassis

Component	Fluids, Lubricants and Genuine Parts
Automatic Transmission	Mopar® ATF+4 Automatic Transmission Fluid.
AWD Power Transfer Unit	Mopar® Gear Lubricant 75W-90.
AWD Overrunning Clutch	Mopar® ATF+4 Automatic Transmission Fluid.
AWD Rear Carrier	Mopar® Gear Lubricant 75W-90.
Brake Master Cylinder	Mopar® DOT 3 and SAE J1703 should be used. If DOT 3 brake fluid is not available, then DOT 4 or DOT 4+ is acceptable. Use only recommended brake fluids.
Power Steering Reservoir	Mopar® ATF+4 Automatic Transmission Fluid.

Downloaded from www.Manualslib.com manuals search engine

Downloaded from www.Manualslib.com manuals search engine

MAINTENANCE SCHEDULES

CONTENTS

■ Emission Control System Maintenance 330

■ Maintenance Schedules 330

□ Schedule “B” 333

□ Schedule “A” 344

Downloaded from www.Manualslib.com manuals search engine

EMISSION CONTROL SYSTEM MAINTENANCE

The "Scheduled" maintenance services, listed in **bold type** must be done at the times or mileages specified to assure the continued proper functioning of the emission control system. These, and all other maintenance services included in this manual, should be done to provide best vehicle performance and reliability. More frequent maintenance may be needed for vehicles in severe operating conditions such as dusty areas and very short trip driving.

Inspection and service also should be done any time a malfunction is suspected.

NOTE: Maintenance, replacement, or repair of the emission control devices and systems on your vehicle may be performed by any automotive repair establishment or individual using any automotive part which has been certified pursuant to U.S. EPA or, in the State of California, California Air Resources Board regulations.

MAINTENANCE SCHEDULES

There are two maintenance schedules that show the **required** service for your vehicle.

First is Schedule **"B"**. It is for vehicles that are operated under the conditions that are listed below and at the beginning of the schedule.

- Day or night temperatures are below 32° F (0° C).
- Stop and go driving.
- Extensive engine idling.
- Driving in dusty conditions.
- Short trips of less than 10 miles (16 km).
- More than 50% of your driving is at sustained high speeds during hot weather, above 90° F (32° C).
- Trailer towing. ◊

Downloaded from www.Manualslib.com manuals search engine

- Taxi, police, or delivery service (commercial service). ◊
- Off-road or desert operation.

NOTE: If **ANY** of these apply to you then change your engine oil every 3,000 miles (5 000 km) or 3 months, whichever comes first and follow schedule "B" of the "Maintenance Schedules" section of this manual.

NOTE: Most vehicles are operated under the conditions listed for Schedule "B".

Second is Schedule **"A"**. It is for vehicles that are not operated under any of the conditions listed under Schedule "B".

Use the schedule that best describes your driving conditions. Where time and mileage are listed, follow the interval that occurs first.

NOTE: Under no circumstances should oil change intervals exceed 6000 miles (10 000 km) or 6 months whichever comes first.

CAUTION!

Failure to perform the required maintenance items may result in damage to the vehicle.

At Each Stop for Fuel

- Check the engine oil level about 5 minutes after a fully warmed engine is shut off. Checking the oil level while the vehicle is on level ground will improve the accuracy of the oil level reading. Add oil only when the level is at or below the ADD or MIN mark.
- Check the windshield washer solvent and add if required.

Downloaded from www.Manualslib.com manuals search engine

Once a Month

- Check tire pressure and look for unusual wear or damage.
- Inspect the battery and clean and tighten the terminals as required.
- Check the fluid levels of coolant bottle, brake master cylinder and transmission, add as needed.
- Check all lights and all other electrical items for correct operation.

At Each Oil Change

- Change the engine oil filter.
- Inspect the exhaust system.
- Inspect the brake hoses.
- Inspect the CV joints and front suspension components.
- Check the automatic transmission fluid level.
- Check the coolant level, hoses, and clamps.

Downloaded from www.Manualslib.com manuals search engine

SCHEDULE "B"

Follow schedule "B" if you usually operate your vehicle under one or more of the following conditions. Change the automatic transmission fluid and filter every 60,000 miles (96 000 km) if the vehicle is usually operated under one or more of the conditions marked with an ◊.

- Day or night temperatures are below 32° F (0° C).
- Stop and go driving.
- Extensive engine idling.
- Driving in dusty conditions.
- Short trips of less than 10 miles (16 km).
- More than 50% of your driving is at sustained high speeds during hot weather, above 90° F (32° C).
- Trailer towing. ◊
- Taxi, police, or delivery service (commercial service). ◊
- Off-road or desert operation.

NOTE: If **ANY** of these apply to you then change your engine oil every 3,000 miles (5 000 km) or 3 months, whichever comes first and follow schedule "B" of the "Maintenance Schedules" section of this manual.

If none of these apply to you, then change your engine oil at every interval shown on schedule "A" of the "Maintenance Schedules" section of this manual.

Downloaded from www.Manualslib.com manuals search engine

Miles (Kilometers)	**3, 000 (5 000)**	**6, 000 (10 000)**	**9, 000 (14 000)**	**12, 000 (19 000)**	**15, 000 (24 000)**	**18, 000 (29 000)**
Change engine oil and engine oil filter.	X	X	X	X	X	X
Rotate Tires		X		X		X
Inspect the brake linings.			X			X
Inspect the engine air cleaner filter, replace if necessary. *	X	X	X	X		X
Replace the **engine air cleaner filter.** *					X	
Change the All Wheel Drive (AWD) power transfer unit fluid. (See note at the end of this chart)					X	
Replace the air conditioning filter.				X		

Downloaded from www.Manualslib.com manuals search engine

Miles (Kilometers)	**21, 000 (34 000)**	**24, 000 (38 000)**	**27, 000 (43 000)**	**30, 000 (48 000)**	**33, 000 (53 000)**	**36, 000 (58 000)**
Change engine oil and engine oil filter.	X	X	X	X	X	X
Rotate Tires		X		X		X
Inspect the brake linings.			X			X
Inspect the engine air cleaner filter, replace if necessary. *	X	X	X		X	X
Replace the **engine air cleaner filter.**				X		
Inspect the tie rod ends and boot seals. (Front & Rear)				X		
Inspect the **PCV valve** and replace as necessary.*				X		
Change the All Wheel Drive (AWD) power transfer unit fluid. (See note at the end of this chart)				X		
Change the All Wheel Drive (AWD) overrunning clutch and rear carrier fluid. (See the note at the end of this chart)	X					
Replace the air conditioning filter.		X				X

Downloaded from www.Manualslib.com manuals search engine

Miles (Kilometers)	**39, 000 (62 000)**	**42, 000 (67 000)**	**45, 000 (72 000)**	**48, 000 (77 000)**	**51, 000 (82 000)**	**54, 000 (86 000)**
Change engine oil and engine oil filter.	X	X	X	X	X	X
Rotate Tires		X		X		X
Inspect the brake linings.			X			X
Inspect the engine air cleaner filter, replace if necessary. *	X	X		X	X	X
Replace the **engine air cleaner filter.** *			X			
Change the All Wheel Drive power transfer unit fluid. (See the note at the end of this chart.)			X			
Change the All Wheel Drive (AWD) overrunning clutch and rear carrier fluid. (See note at the end of this chart)		X				
Replace the air conditioning filter.				X		

Downloaded from www.Manualslib.com manuals search engine

Miles (Kilometers)	**57, 000 (91 000)**	**60, 000 (96 000)**	**63, 000 (101 000)**	**66, 000 (106 000)**	**69, 000 (110 000)**	**72, 000 (115 000)**
Change engine oil and engine oil filter.	X	X	X	X	X	X
Rotate Tires		X		X		X
Inspect the brake linings.			X			X
Inspect the engine air cleaner filter, replace if necessary. *	X		X	X	X	X
Replace the **engine air cleaner filter.**		X				
Inspect the tie rod ends and boot seals. (Front & Rear)		X				
Inspect the **PCV valve** and replace if necessary.*		X				
Inspect the serpentine drive belt, replace if necessary. ‡		X				
Change the automatic transmission fluid and filter.		X				

Downloaded from www.Manualslib.com manuals search engine

Miles (Kilometers)	**57, 000 (91 000)**	**60, 000 (96 000)**	**63, 000 (101 000)**	**66, 000 (106 000)**	**69, 000 (110 000)**	**72, 000 (115 000)**
Change the All Wheel Drive (AWD) power transfer unit fluid. (See note at the end of this chart)		X		X		
Change the All Wheel Drive (AWD) overrunning clutch and rear carrier fluid. (See note at the end of this chart)			X			
Replace the air conditioning filter.		X				X

Downloaded from www.Manualslib.com manuals search engine

Miles (Kilometers)	**75, 000 (120 000)**	**78, 000 (125 000)**	**81, 000 (130 000)**	**84, 000 (134 000)**	**87, 000 (139 000)**	**90, 000 (144 000)**
Change engine oil and engine oil filter.	X	X	X	X	X	X
Rotate Tires		X		X		X
Inspect the brake linings.			X			X
Inspect the engine air cleaner filter, replace if necessary. *		X	X	X	X	
Replace the **engine air cleaner filter**	X					X
Replace the **spark plugs** on 3.5 liter engines.	X					
Inspect the tie rod ends and boot seals. (Front & Rear)						X
Check the **PCV valve** and replace if necessary. Not required if previously changed.*						X
Inspect the serpentine drive belt, replace if necessary. ‡	X					X
Change the All Wheel Drive power transfer unit fluid. (See the note at the end of this chart.)	X					X

Downloaded from www.Manualslib.com manuals search engine

Miles (Kilometers)	**75, 000 (120 000)**	**78, 000 (125 000)**	**81, 000 (130 000)**	**84, 000 (134 000)**	**87, 000 (139 000)**	**90, 000 (144 000)**
Change the All Wheel Drive (AWD) overrunning clutch and rear carrier fluid. (See note at the end of this chart)				X		
Replace the air conditioning filter.				X		

Downloaded from www.Manualslib.com manuals search engine

Miles (Kilometers)	**93, 000 (149 000)**	**96, 000 (154 000)**	**99, 000 (158 000)**	**100, 000 (160 000)**	**102, 000 (163 000)**	**105, 000 (168 000)**
Change engine oil and engine oil filter.	X	X	X		X	X
Rotate Tires		X			X	
Inspect the brake linings.			X			
Inspect the engine air cleaner filter, replace if necessary. *	X	X	X	X	X	
Replace the **engine air cleaner filter** *						X
Replace engine timing belt.						X
Change the All Wheel Drive (AWD) power transfer unit fluid. (See note at the end of this chart)						X
Change the All Wheel Drive (AWD) overrunning clutch and rear carrier fluid. (See note at the end of this chart)						X
Inspect the serpentine drive belt, replace if necessary. ‡						X

Downloaded from www.Manualslib.com manuals search engine

Miles (Kilometers)	**93, 000 (149 000)**	**96, 000 (154 000)**	**99, 000 (158 000)**	**100, 000 (160 000)**	**102, 000 (163 000)**	**105, 000 (168 000)**
Flush and replace the engine coolant at 60 months or 100,000 miles.				X		
Replace the air conditioning filter.		X				

Miles (Kilometers)	**108, 000 (173 000)**	**111, 000 (178 000)**	**114, 000 (182 000)**	**117, 000 (187 000)**	**120, 000 (192 000)**
Change engine oil and engine oil filter.	X	X	X	X	X
Rotate Tires	X		X		X
Inspect the brake linings.	X			X	
Inspect the engine air cleaner filter, replace if necessary. *	X	X	X	X	
Replace the **engine air cleaner filter.**					X
Inspect the tie rod ends and boot seals. (Front & Rear)					X
Inspect the **PCV valve** and replace as necessary.*					X

Downloaded from www.Manualslib.com manuals search engine

Miles (Kilometers)	108, 000 (173 000)	111, 000 (178 000)	114, 000 (182 000)	117, 000 (187 000)	120, 000 (192 000)
Inspect the serpentine drive belt, replace if necessary. ‡					X
Change the automatic transmission fluid and filter.					X
Change the All Wheel Drive (AWD) power transfer unit fluid. (See note at the end of this chart)					X
Replace the air conditioning filter.	X				X

* This maintenance is recommended by the manufacture to the owner but is not required to maintain the emissions warranty.

‡ This maintenance is not required if previously replaced.

Inspection and service should also be performed anytime a malfunction is observed or suspected. Retain all receipts.

NOTE: The AWD power transfer unit fluid and the AWD overrunning clutch/ rear carrier fluid must be changed at the more frequent intervals shown in schedule B if the vehicle is operated under any of the conditions noted by a diamond (◊) at the beginning of the schedule.

Downloaded from www.Manualslib.com manuals search engine

SCHEDULE "A"

Miles **(Kilometers)** **[Months]**	**6, 000** **(10 000)** **[6]**	**12, 000** **(19 000)** **[12]**	**18, 000** **(29 000)** **[18]**	**24, 000** **(38 000)** **[24]**	**30, 000** **(48 000)** **[30]**	**36, 000** **(58 000)** **[36]**
Change engine oil and engine oil filter.	X	X	X	X	X	X
Rotate Tires	X	X	X	X	X	X
Inspect the brake linings.			X			X
Inspect the engine air cleaner filter, replace if necessary. *	X	X	X	X		X
Replace the **engine air cleaner filter.**					X	
Inspect the tie rod ends and boot seals. (Front & Rear)					X	
Replace the air conditioning filter.		X		X		X

Downloaded from www.Manualslib.com manuals search engine

Miles (Kilometers) [Months]	**42, 000 (67 000) [42]**	**48, 000 (77 000) [48]**	**54, 000 (86 000) [54]**	**60, 000 (96 000) [60]**	**66, 000 (106 000) [66]**	**72, 000 (115 000) [72]**
Change engine oil and engine oil filter.	X	X	X	X	X	X
Rotate Tires	X	X	X	X	X	X
Inspect the brake linings.			X			X
Inspect the engine air cleaner filter, replace if necessary. *	X	X	X		X	X
Replace the **engine air cleaner filter.**				X		
Inspect the tie rod ends and boot seals. (Front & Rear)				X		
Check the **PCV valve and replace, if necessary.***				X		
Inspect the serpentine drive belt, replace if necessary. ‡				X		X
Flush and replace the engine coolant at 60 months, regardless of mileage.				X		
Replace the air conditioning filter.		X		X		X

Downloaded from www.Manualslib.com manuals search engine

Miles (Kilometers) [Months]	**78, 000 (125 000) [78]**	**84, 000 (134 000) [84]**	**90, 000 (144 000) [90]**	**96, 000 (154 000) [96]**	**100, 000 (160 000)**
Change engine oil and engine oil filter.	X	X	X	X	
Rotate Tires	X	X	X	X	
Inspect the brake linings.			X		
Inspect the engine air cleaner filter, replace if necessary. *	X	X		X	X
Replace the **engine air cleaner filter.**			X		
Inspect the tie rod ends and boot seals. (Front & Rear)			X		
Check and replace the **PCV valve , if necessary.***			X		
Inspect the serpentine drive belt, replace if necessary. ‡			X		
Replace the **spark plugs 3.5 liter engines.**					X
Flush and replace the engine coolant at 100,000 miles, if not done at 60 months.					X
Replace the air conditioning filter.		X		X	

Downloaded from www.Manualslib.com manuals search engine

Miles (Kilometers) [Months]	**102, 000 (163 000) [102]**	**108, 000 (173 000) [108]**	**114, 000 (182 000) [114]**	**120, 000 (192 000) [120]**
Change engine oil and engine oil filter.	X	X	X	X
Rotate Tires	X	X	X	X
Inspect the brake linings.		X		
Inspect the engine air cleaner filter, replace if necessary. *	X	X	X	
Replace the **engine air cleaner filter.**				X
Replace engine timing belt.	X			
Inspect the tie rod ends and boot seals. (Front & Rear)				X
Check the **PCV valve and replace, if necessary.***				X
Inspect the serpentine drive belt, replace if necessary. ‡	X			X
Flush and replace the engine coolant at 120 months, if not done at 100,000 miles (160 000 km).				X
Replace the air conditioning filter.		X		X

Downloaded from www.Manualslib.com manuals search engine

* This maintenance is recommended by the manufacture to the owner but is not required to maintain the emissions warranty.

‡ This maintenance is not required if previously replaced.

Inspection and service should also be performed anytime a malfunction is observed or suspected. Retain all receipts.

WARNING!

You can be badly injured working on or around a motor vehicle. Do only that service work for which you have the knowledge and the right equipment. If you have any doubt about your ability to perform a service job, take your vehicle to a competent mechanic.

Downloaded from www.Manualslib.com manuals search engine

IF YOU NEED CONSUMER ASSISTANCE

CONTENTS

- Suggestions For Obtaining Service For Your Vehicle 350
  - Prepare For The Appointment 350
  - Prepare A List 350
  - Be Reasonable With Requests 350
- If You Need Assistance 350
- Warranty Information 353
- Mopar® Parts 355
- Reporting Safety Defects 355
  - In Canada 355
- Publication Order Forms 356
- Department Of Transportation Uniform Tire Quality Grades 357
  - Treadwear 357
  - Traction Grades 357
  - Temperature Grades 358

Downloaded from www.Manualslib.com manuals search engine

SUGGESTIONS FOR OBTAINING SERVICE FOR YOUR VEHICLE

Prepare For The Appointment

If you're having warranty work done, be sure to have the right papers with you. Take your warranty folder. All work to be performed may not be covered by the warranty, discuss additional charges with the service manager. Keep a maintenance log of your vehicle's service history. This can often provide a clue to the current problem.

Prepare A List

Make a written list of your vehicle's problems or the specific work you want done. If you've had an accident, or work done that is not on your maintenance log, let the service advisor know.

Be Reasonable With Requests

If you list a number of items, and you must have your vehicle by the end of the day, discuss the situation with the service advisor and list the items in order of priority. At many dealers you may obtain a rental vehicle at a minimal daily charge. If you need a rental, it is advisable to make these arrangements when you call for an appointment.

IF YOU NEED ASSISTANCE

The manufacturer and its dealers are vitally interested in your satisfaction. We want you to be happy with our products and services.

Your selling dealer is best equipped and most anxious to provide prompt resolution for any warranty issue or related matter that you may experience. The manufacturer's dealers have the facilities, factory-trained technicians, special tools, and the latest information to assure your vehicle is fixed correctly and in a timely manner.

Downloaded from www.Manualslib.com manuals search engine

The manufacturer has empowered its dealers to make warranty and repair decisions that ensure you are not inconvenienced. There is no need for you to wait for a decision from the manufacturer. If a special circumstance occurs that requires information from the manufacturer, we have asked the dealer's service management to make the contact on your behalf.

This is why you should always talk to your dealer's service manager first. Most matters can be resolved with this process.

- If for some reason you are still not satisfied, talk to the general manager or owner of the dealership. They want to know if you need assistance.
- If your dealership is unable to resolve the concern, you may contact the Manufacturer's Customer Center.

Any communication to the Manufacturer's Customer Center should include the following information:

- Owner's name and address
- Owner's telephone number (home and office)
- Dealership name
- Vehicle identification number
- Vehicle delivery date and mileage

DaimlerChrysler Motors Corporation Customer Center
P.O. Box 21–8004
Auburn Hills, MI 48321–8004
Phone: (800) 992-1997

DaimlerChrysler Canada Inc. Customer Center
P.O. Box 1621
Windsor, Ontario N9A 4H6
Phone —(800) 465–2001

In Mexico contact:
Av. Prolongacion Paseo de la Reforma, 1240
Sante Fe C.P. 05109

Downloaded from www.Manualslib.com manuals search engine

Mexico, D. F.
In Mexico (915) 729–1248 or 729–1240
Outside Mexico (525) 729–1248 or 729–1240

Customer Assistance For The Hearing Or Speech Impaired (TDD/TTY)

To assist customers who have hearing difficulties, the manufacturer has installed special TDD (Telecommunication Devices for the Deaf) equipment at its Customer Center. Any hearing or speech impaired customer who has access to a TDD or a conventional teletypewriter (TTY) in the United States can communicate with the manufacturer by dialing 1–800–380–CHRY.

Service Contract

You may have purchased a service contract for your vehicle to help protect you from the high cost of unexpected repairs after your manufacturer's new vehicle limited warranty expires. The manufacturer stands behind only the manufacturer's Service Contracts. If you purchased a manufacturer's Service Contract, you will receive Plan Provisions and an Owner Identification Card in the mail within three weeks of your vehicle delivery date. If you have any questions about your service contract, call the manufacturer's Service Contract National Customer Hotline at 1-800-521-9922.

The manufacturer will not stand behind any service contract that is not the manufacturer's Service Contract. It is not responsible for any service contract other than the manufacturer's Service Contract. If you purchased a service contract that is not a manufacturer's Service Contract, and you require service after your manufacturer's new vehicle limited warranty expires, please refer to your contract documents, and contact the person listed in those documents.

Downloaded from www.Manualslib.com manuals search engine

We appreciate that you have made a major investment when you purchased your new vehicle. Your dealer has also made a major investment in facilities, tools, and training to assure that you are absolutely delighted with your ownership experience. You'll be pleased with their sincere efforts to resolve any warranty issues or related concerns.

WARRANTY INFORMATION

See your manufacturer's Warranty Information Booklet for information on warranty coverage and transfer of warranty.

Downloaded from www.Manualslib.com manuals search engine

DESCRIPTION	1 Yr/ 12,000	2 Yr/ 24,000	3 Yr/ 36,000	3 Yr/ 50,000	3 Yr/ Unlmtd	5 Yr/ 100,000	7 Yr/ 70,000	8 Yr/ 80,000
Basic Limited Warranty Coverage	■	■	■					
Special Extended Warranty Coverage								
Powertrain Limited Warranty ($100 deductible)	■	■	■	1st Owner & 2nd Owner with Paid Powertrain Transfer				
	2nd Owner if Powertrain Not Transferred and 3rd (And After) Owners							
Anti-Corrosion Perforation Limited Warranty: All Panels	■	■	■	■	■			
Outer Panels	■	■	■	■	■	■		
Federal Emission Warranty	■	■						
Federal Emission Warranty - Specified Components	■	■	■	■	■	■	■	■
California Emission Warranty	■	■	■	■				
California Emission Warranty - Specified Components	■	■	■	■	■	■	■	

NOTE: Vehicles used as a police vehicle, taxi, limousine, postal delivery vehicle, ambulance or rental vehicle are covered only under the 3 year/36,000 mile Basic Limited Warranty.

8132c269

Downloaded from www.Manualslib.com manuals search engine

MOPAR® PARTS

Mopar® fluids, lubricants, parts, and accessories are available from your dealer. They will help you keep your vehicle operating at its best.

REPORTING SAFETY DEFECTS

In the 50 United States and Washington D.C.: If you believe that your vehicle has a defect which could cause a crash or cause injury or death, you should immediately inform the National Highway Traffic Safety Administration (NHTSA) in addition to notifying the manufacturer.

If NHTSA receives similar complaints, it may open an investigation, and if it finds that a safety defect exists in a group of vehicles, it may order a recall and remedy campaign. However, NHTSA cannot become involved in individual problems between you, your dealer, and the manufacturer.

To contact NHTSA, you may either call the Auto Safety Hotline toll free at 1-800-424-9393 (or 366-0123 in Washington DC area) or write to: NHTSA, U.S. Dept. of Transportation, Washington DC 20590. You can also obtain other information about motor vehicle safety from the Hotline.

In Canada:

If you believe that your vehicle has a safety defect, you should contact the Customer Service Department immediately. Canadian customers who wish to report a safety defect to the Canadian government should write to Transport Canada, Motor Vehicle Defect Investigations and Recalls, 2780 Sheffield Road, Ottawa, Ontario K1B 3V9.

Downloaded from www.Manualslib.com manuals search engine

PUBLICATION ORDER FORMS

To order the following manuals, you may use either the website or the phone numbers listed below. Visa, Mastercard, American Express, and Discover orders are accepted. If you prefer mailing your payment, please call for an order form.

NOTE: A street address is required when ordering manuals. (No P.O. Boxes).

- *Service Manuals.*

  These comprehensive service manuals provide the information that students and professional technicians need in diagnosing/troubleshooting, problem solving, maintaining, servicing and repairing DaimlerChrysler Corporation vehicles. A complete working knowledge of the vehicle, system and/or components is written in straightforward language with illustrations, diagrams and charts.

- *Diagnostic Procedure Manuals.*

  Filled with diagrams, charts and detailed illustrations, these practical manuals make it easy for students and technicians to find and fix problems on computer-controlled vehicle systems and features. They show exactly how to find and correct problems the first time, using step-by-step troubleshooting and driveability procedures, proven diagnostic tests and a complete list of all tools and equipment.

- *Owner's Manuals.*

  These manuals have been prepared with the assistance of service and engineering specialists to acquaint you with specific Chrysler group vehicles. Included are starting, operating, emergency and maintenance procedures as well as specifications, capabilities and safety tips.

Downloaded from www.Manualslib.com manuals search engine

Call Toll Free at **1–800–890–4038 (U.S.)** or **1–800–387–1143 (Canada)**

Or

Visit us on the World Wide Web at:

www.techauthority.daimlerchrysler.com or **www.daimlerchrysler.ca/manuals**

DEPARTMENT OF TRANSPORTATION UNIFORM TIRE QUALITY GRADES

The following describes the tire grading categories established by the National highway Traffic Safety Administration. The specific grade rating assigned by the tire's manufacturer in each category is shown on the sidewall of the tires on your car.

All Passenger Car Tires Must Conform to Federal Safety Requirements in Addition to These Grades.

Treadwear

The treadwear grade is a comparative rating based on the wear rate of the tire when tested under controlled conditions on a specified government test course. For example, a tire graded 150 would wear one and a half (1 1/2) times as well on the government course as a tire graded 100. The relative performance of tires depends upon the actual conditions of their use, however, and may depart significantly from the norm due to variations in driving habits, service practices and differences in road characteristics and climate.

Traction Grades

The traction grades, from highest to lowest, are A, B, and C, and they represent the tire's ability to stop on wet pavement as measured under controlled conditions on specified government test surfaces of asphalt and concrete. A tire marked C may have poor traction performance.

Downloaded from www.Manualslib.com manuals search engine

WARNING!

The traction grade is based on braking (straight-ahead) traction tests and does not include cornering (turning) performance.

Temperature Grades

The temperature grades are A (highest), B, and C, representing the tire's resistance to the generation of heat and its ability to dissipate heat when tested under controlled conditions on a specified indoor laboratory test wheel. Sustained high temperature can cause the material of the tire to degenerate and reduce tire life, and excessive temperature can lead to sudden tire failure. The grade C corresponds to a level of performance which all passenger car tires must meet under the Federal Motor Vehicle Safety Standard No. 109. Grades B and A represent higher levels of performance on the laboratory test wheel than the minimum required by law.

WARNING!

The temperature grade is established for a tire that is properly inflated and not overloaded. Excessive speed, underinflation, or excessive loading, either separately or in combination, can cause heat buildup and possible tire failure.

Downloaded from www.Manualslib.com manuals search engine

INDEX

Downloaded from www.Manualslib.com manuals search engine

Adding Fuel 252
Adding Washer Fluid 115,297
Additives, Fuel 250
Adjustable Pedals 118
Air Conditioner Maintenance 293
Air Conditioning Filter 204,294
Air Conditioning Refrigerant 293
Air Conditioning System 195,293
Air Pressure, Tires 234
Airbag 42
Airbag Deployment 49
Airbag Light 46,51,61,151
Airbag Maintenance 50
Airbag, Side 48
Alarm System 24
Alignment and Balance 241
All Wheel Drive 217,242,310
Alterations/Modifications, Vehicle 7
Antenna, Satellite Radio 189
Antifreeze Disposal 301
Antifreeze (Engine Coolant) 299,300,325
Anti-Lock Brake System 220
Anti-Lock Warning Light 145
Anti-Theft Security Alarm 24
Appearance Care 311
Arming Theft System 24
Auto Down Power Windows 30
Automatic Dimming Mirror 67
Automatic Door Locks 17,18
Automatic Headlights 111
Automatic Temperature Control 195
Automatic Transaxle 213,307
  Adding Fluid 327
  Filter 309
  Fluid and Filter Changes 309
  Fluid Level Check 308
  Interlock System 214
  Reset Mode 214

Downloaded from www.Manualslib.com manuals search engine

Selection Of Lubricant 307,327
Shifting 215
Special Additives 309
Autostick 120,215,216

Ball Joints 295
Battery 291
Jump Starting 270
Keyless Transmitter Replacement 23
Bearings 311
Belts, Drive 288
Body Mechanism Lubrication 296
B-Pillar Location 229
Brake, Parking 218
Brake System 219,304
Anti-Lock 220
Fluid Check 305,327
Hoses 304
Warning Light 146
Brakes 219,304
Brake/Transmission Interlock 213
Break-In Recommendations, New Vehicle 59
Bulb Replacement 321
Bulbs, Light 320

Calibration, Compass 158
Capacities, Fluid 325
Caps, Filler
Fuel 252
Radiator 301
Car Washes 312
Carbon Monoxide Warning 251
Cargo Area Cover 134
Cargo Compartment
Luggage Carrier 137
Cargo Tie-Downs 135
Cassette Tape and Player Maintenance 192
Cassette Tape Player 165,170

Downloaded from www.Manualslib.com manuals search engine

Catalytic Converter 290
Caution, Exhaust Gas 60,297
CD Changer 165,173,175
CD Player 161,163,165,172,175
CD Player Maintenance 193
Cellular Phone 71,194
Chains, Tire 245
Changing A Flat Tire 264
Chart, Tire Sizing 226
Child Restraint 51
Child Restraint Tether Anchors 52,54
Child Safety Locks 18
Child Seat 57
Clean Air Gasoline 248
Climate Control 195
Clock 160
Compact Disc Maintenance 193
Compact Spare Tire 237
Compass 157
Compass Calibration 158
Compass Variance 158
Computer, Trip/Travel 159
Console 133
Console, Floor 133
Console, Overhead 122
Contract, Service 352
Coolant Pressure Cap 301
Cooling System 298
Adding Coolant (Antifreeze) 300
Coolant Capacity 325
Coolant Level 302
Disposal of Used Coolant 301
Drain, Flush, and Refill 299
Inspection 298
Points to Remember 302
Pressure Cap 301
Radiator Cap 301
Selection of Coolant 299,325,326

Downloaded from www.Manualslib.com manuals search engine

Cruise Control 119
Cruise Light 149
Cup Holder 133,316
Customer Assistance 350

Dealer Service 283
Defroster, Rear Window 205
Defroster, Windshield 61,200
Delay Wipers 114
Deploying, Airbag 49
Diagnostic System, Onboard 281
Digital Video Disc Player 175
Dimmer Switch, Headlight 113
Dipsticks
  Automatic Transaxle 308
Disarming, Theft System 25
Disposal
  Antifreeze 301
Door Locks 16
Door Locks, Automatic 17
Door Opener, Garage 123
Drive Belts 288
Drive Shaft Universal Joints 295
Driving
  On Slippery Surfaces 272
DVD Player 175

Electric Remote Mirrors 69
Electrical Power Outlets 131
Electronic Speed Control 119
Electronic Vehicle Information Center 151
Emergency, In Case of
  Jacking 264
  Overheating 263
Emission Control System Maintenance 282,330
Engine 280
  Air Cleaner 289
  Air Cleaner Filter 289

Downloaded from www.Manualslib.com manuals search engine

Block Heater 212
Break-In Recommendations 59
Checking Oil Level 284
Compartment 280
Coolant 326
Cooling 298
Exhaust Gas Caution 29,251
Fails to Start 211
Fuel Requirements 248,325
Oil 284,325,326
Oil Change Interval 286
Oil Selection 286,325
Oil Synthetic 288
Overheating 263
Temperature Gauge 144
Engine Oil Viscosity Chart 287
Exhaust Gas Caution 29,60,251,298
Exhaust System 297
Extender, Seat Belt 41
Exterior Folding Mirrors 68

Filters
Air Cleaner 289
Air Conditioning 204,294
Automatic Transaxle 309
Engine Fuel 289
Engine Oil 288,326
Engine Oil Disposal 288
Flashers
Hazard Warning 262
Turn Signal 145,322,324
Floor Console 133
Fluid Capacities 325
Fluid Leaks 62
Fluid Level Checks
Automatic Transaxle 308
Brake 327
Power Steering 294,327

Downloaded from www.Manualslib.com manuals search engine

Fog Light Service 323
Fog Lights 112,150,323
Folding Rear Seat 101
Freeing A Stuck Vehicle 273
Fuel 248
  Adding 252
  Additives 250
  Clean Air 248
  Filler Cap 252
  Filter 289
  Gasoline 248
  Gauge 145
  Hoses 306
  Octane Rating 248,326
  Requirements 248,325
  Tank Capacity 325
Fuel System Caution 251
Fueling 252
Fuses 316
Garage Door Opener 123
Gas Cap 252
Gasoline 248
Gasoline, Clean Air 248
Gasoline, Reformulated 249
Gauges
  Coolant Temperature 144
  Fuel 145
  Speedometer 145
  Tachometer 148
Gearshift 215
General Information 15,23,245
Glass Cleaning 315
Grocery Bag Retainer 103
Gross Axle Weight Rating 254
Gross Vehicle Weight Rating 254

Hands-Free Phone 71
Hazard Warning Flasher 262

Downloaded from www.Manualslib.com manuals search engine

Head Phones 183
Head Restraints 94
Headlights 322
Bulb Replacement 321
High Beam 113
High Beam/Low Beam Select Switch 113
Passing 113
Replacing 321
Switch 110
Time Delay 111
Heated Seats 94
Heater, Engine Block 212
Holder, Cup 133
Homelink Transmitter 123
Hood Release 107
Hoses 303,306

Ignition
Key 11
Illuminated Entry 15
Immobilizer 12
Indicator, Traction Control 147
Infant Restraint 55
Information Center, Vehicle 151
Instrument Cluster 143,144
Instrument Panel and Controls 142
Instrument Panel Lens Cleaning 315
Integrated Power Module 316
Interior Appearance Care 314
Interior Fuses 316
Interior Lights 109,110
Intermittent Wipers 114
Introduction 4

Jack Location 265
Jack Operation 264,267
Jacking Instructions 267
Jump Starting 270

Downloaded from www.Manualslib.com manuals search engine

Key, Programming 14
Key, Replacement 14
Key, Sentry 12
Key-In Reminder 12
Keyless Entry System 19
Keys 11
Knee Bolster 46,48

Lap/Shoulder Belts 31
LATCH (Lower Anchors and Tether
for CHildren) 52,54
Latches
  Hood 107
Lead Free Gasoline 248
Liftgate 26
Lights 62,108
  Airbag 46,51,61,151
  Anti-Lock 145
  Automatic Headlights 111
Back-Up 324
Brake Warning 146
Bulb Replacement 320,321
Courtesy/Reading 108
Cruise 149
Daytime Running 111
Dimmer Switch, Headlight 109
Engine Temperature Warning 151
Fog 112,150,323
Hazard Warning Flasher 262
Headlight Switch 110
Headlights 110,321,322
High Beam Indicator 149
Illuminated Entry 15
Instrument Cluster 110
Interior 110
License 324
Lights On Reminder 111
Malfunction Indicator 149

Downloaded from www.Manualslib.com manuals search engine

Oil Pressure 150
Park 322
Reading 122
Rear Servicing 324
Rear Tail 324
Seat Belt Reminder 150
Service 320,321
Service Engine Soon 149
Side Marker 324
Turn Signal 109,112,322,324
Voltage 144
Warning (Instrument Cluster Description) 144
Load Leveling System 138
Loading Vehicle 254,255
Capacities 255
Tires 229
Locks
Door 16
Lower Anchors and Tether for CHildren (LATCH) 52,54
Lubrication, Body 296
Luggage Rack 137

Maintenance, Airbag 50
Maintenance Free Battery 291
Maintenance Procedures 284
Maintenance Schedule 330
Light Duty Schedule ″A″ 344
Light Duty Schedule ″B″ 333
Schedule ″A″ 344
Schedule ″B″ 333
Maintenance, Sunroof 131
Malfunction Indicator Light 149,282
Manual, Service 356
Map/Reading Lights 122
Memory Feature 104
Memory Seat 70,104

Downloaded from www.Manualslib.com manuals search engine

Mini-Trip Computer 159
Mirrors 67
Automatic Dimming 67
Electric Remote 69
Exterior Folding 68
Heated 70
Memory 104
Outside 68
Rearview 67
Vanity 70
Modifications/Alterations, Vehicle 7
Monitor, Tire Pressure System 242
Mopar Parts 283,355
Multi-Function Control Lever 109

Navigation System 194
New Vehicle Break-In Period 59

Occupant Restraints 30
Octane Rating, Gasoline 248
Odometer 148
Oil, Engine 284,326
Capacity 325
Change Interval 286
Checking 284
Disposal 288
Filter 288,326
Filter Disposal 288
Identification Logo 287
Materials Added to 288
Recommendation 286,325
Synthetic 288
Viscosity 287,325
Onboard Diagnostic System 281,282
Opener, Garage Door 123
Operator Manuals 4
Overdrive 215
Overhead Console 122

Downloaded from www.Manualslib.com manuals search engine

Overhead Travel Information Center 122
Overheating, Engine 144,263
Owner's Manual 4,356

Panic Alarm 21
Parking Brake 218
Parking On Hill 218
Passing Light 113
Pedals, Adjustable 118
Pets 59
Phone, Cellular 71
Phone, Hands-Free 71
Placard, Tire and Loading Information 229
Power
  Brakes 219
  Distribution Center 316
  Door Locks 16
  Lift Gate 27
  Mirrors 69
  Outlet 131
  Seats 93
  Steering 222
  Steering, Checking 294
  Sunroof 129
  Windows 29
Pregnant Women and Seat Belts 41
Preparation for Jacking 266
Pretensioners
  Seat Belts 39
Programmable Electronic Features 124,128,154
Programming Transmitters 21,124,128

Radial Ply Tires 237
Radiator Cap 301
Radio 161,165
Radio Broadcast Signals 191
Radio Operation 166,194
Radio Remote Controls 178,190

Downloaded from www.Manualslib.com manuals search engine

Radio, Satellite 186
Rear Liftgate 26
Rear Seating Flexibility 101
Rear Window Defroster 205
Rear Window Features 114
Rear Wiper/Washer 114
Rearview Mirrors 67
Reclining Front Seats 96
Recommended Fluids, Lubricants and Genuine
Parts 326
Reminder, Seat Belt 39
Remote Keyless Entry 19
Remote Sound System Controls 190
Replacement Keys 14
Replacement Parts 283
Replacement Tires 240,242
Reporting Safety Defects 355
Restraint, Head 94
Restraints, Child 51,57
Restraints, Infant 55
Retractable Cargo Area Cover 134
Rocking Vehicle When Stuck 273
Roof Rack 137
Rotation, Tires 247

Safety Checks Inside Vehicle 61
Safety Checks Outside Vehicle 62
Safety Defects, Reporting 355
Safety, Exhaust Gas 29
Safety Information, Tire 224
Safety Tips 60
Satellite Radio 186
Satellite Radio Antenna 189
Schedule, Maintenance 330
Seat Belt Maintenance 315
Seat Belt Reminder 39
Seat Belts 30
Adjustable Shoulder Belt 36

Downloaded from www.Manualslib.com manuals search engine

Adjustable Upper Shoulder Anchorage 36
And Pregnant Women 41
Child Restraint 51
Extender 41
Front Seat 31
Pretensioners 39
Rear Seat 31
Reminder 150
Untwisting Procedure 37
Seats 93
Adjustment 97
Easy Entry 98
Heated 94
Memory 104
Power 93
Reclining 96
Tilting 98
Security Alarm 24
Selection of Coolant 326
Sentry Key 12
Sentry Key Programming 14
Service Assistance 350
Service Contract 352
Service Engine Soon Light 149
Service Manuals 356
Setting the Clock 160
Shoulder Belts 31
Side Airbag 48
Signals, Turn 145,322,324
Slippery Surfaces, Driving On 272
Snow Chains 245
Snow Tires 246
Spare Tire 237,238,265
Spark Plugs 289
Speed Control 119
Speedometer 145
Starting 210
Engine Fails to Start 211

Downloaded from www.Manualslib.com manuals search engine

Starting and Operating 210
Starting Procedures 210
Steering
Linkage 295
Power 222,294
Shaft Seal 295
Tilt Column 116
Steering Wheel Mounted Sound System
Controls 190
Storage 133,319
Storage, Vehicle 203,319
Storing Your Vehicle 319
Sulfur in Gasoline 250
Sun Roof 129
Sun Visor Extension 70
Sunglass Storage 122
Sunroof Maintenance 131
Supplemental Restraint System - Airbag 42
System, Navigation 194
Tachometer 148
Tape Player 170
Temperature Control, Automatic 195
Temperature Gauge, Engine Coolant 144,263
Tether Anchor, Child Restraint 52,54
Theft Alarm 24
Theft System 24
Theft System Arming 24
Theft System Disarming 25
Tie Down Hooks, Cargo 135
Tilt Steering Column 116
Tire and Loading Information Placard 229
Tire Identification Number (TIN) 228
Tire Markings 224
Tire Safety Information 224
Tires 62,233,357
Air Pressure 233
Alignment 241
Chains 245

Downloaded from www.Manualslib.com manuals search engine

Changing 264
Compact Spare 237
General Information 233
High Speed 236
Inflation Pressures 234
Jacking 264
Load Capacity 229,230
Pressure Monitor System 242
Quality Grading 357
Radial 237
Replacement 240,242
Rotation 247
Safety 224,233
Sizes 226
Snow Tires 246
Spare Tire 265
Spinning 239
Tread Wear Indicators 240
Towing 256
Disabled Vehicle 274
Trailering 256
Traction Control 116,147,223
Traction Control Switch 116,223
Trailer Towing 256
Minimum Requirements 257
Trailer and Tongue Weight 257
Transaxle 213,307
Automatic 213,307
Autostick 120,215,216
Filter 309
Operation 213
Overdrive 215
Selection of Lubricant 307,327
Transmission . . . . . *See Transaxle*
Transmitter Battery Service 23
Transmitter, Garage Door Opener 123
Transmitter Programming 21
Transmitter, Remote Keyless Entry 19

Downloaded from www.Manualslib.com manuals search engine

Transporting Pets 59
Tread Wear Indicators 240
Trip Odometer 148
Trip Odometer Reset Button 148
Turn Signals 112,145,322,324

Uniform Tire Quality Grades 357
Universal Joints 295
Universal Transmitter 123
Unleaded Gasoline 248
Untwisting Procedure, Seat Belt 37

Vanity Mirrors 70
Variance, Compass 158
Vehicle Certification Label 254
Vehicle Identification Number 6
Vehicle Loading 230,254,255
Vehicle Modifications/Alterations 7
Vehicle Storage 203,319
Vehicle Theft Alarm 24
Video Entertainment System 175

Warning Flasher, Hazard 262
Warning Lights (Instrument Cluster Description) . 144
Warnings and Cautions 6
Warranty Information 353
Washer, Adding Fluid 115,297
Washers, Windshield 113
Washing Vehicle 312
Wheel Alignment and Balance 241
Wheel and Wheel Trim 313
Wheel Bearings 311
Wind Buffeting 30,131
Window Fogging 204
Windows 29
  Power 29
Windshield Washers 113,297
Windshield Wiper Blades 296

Downloaded from www.Manualslib.com manuals search engine

Windshield Wipers 113
Wiper Blade Replacement 296
Wiper, Rear 114
Wipers, Intermittent 114

Downloaded from www.Manualslib.com manuals search engine