COMMON RAIL ASSY (1CD–FTV)

110UB–01

COMPONENTS

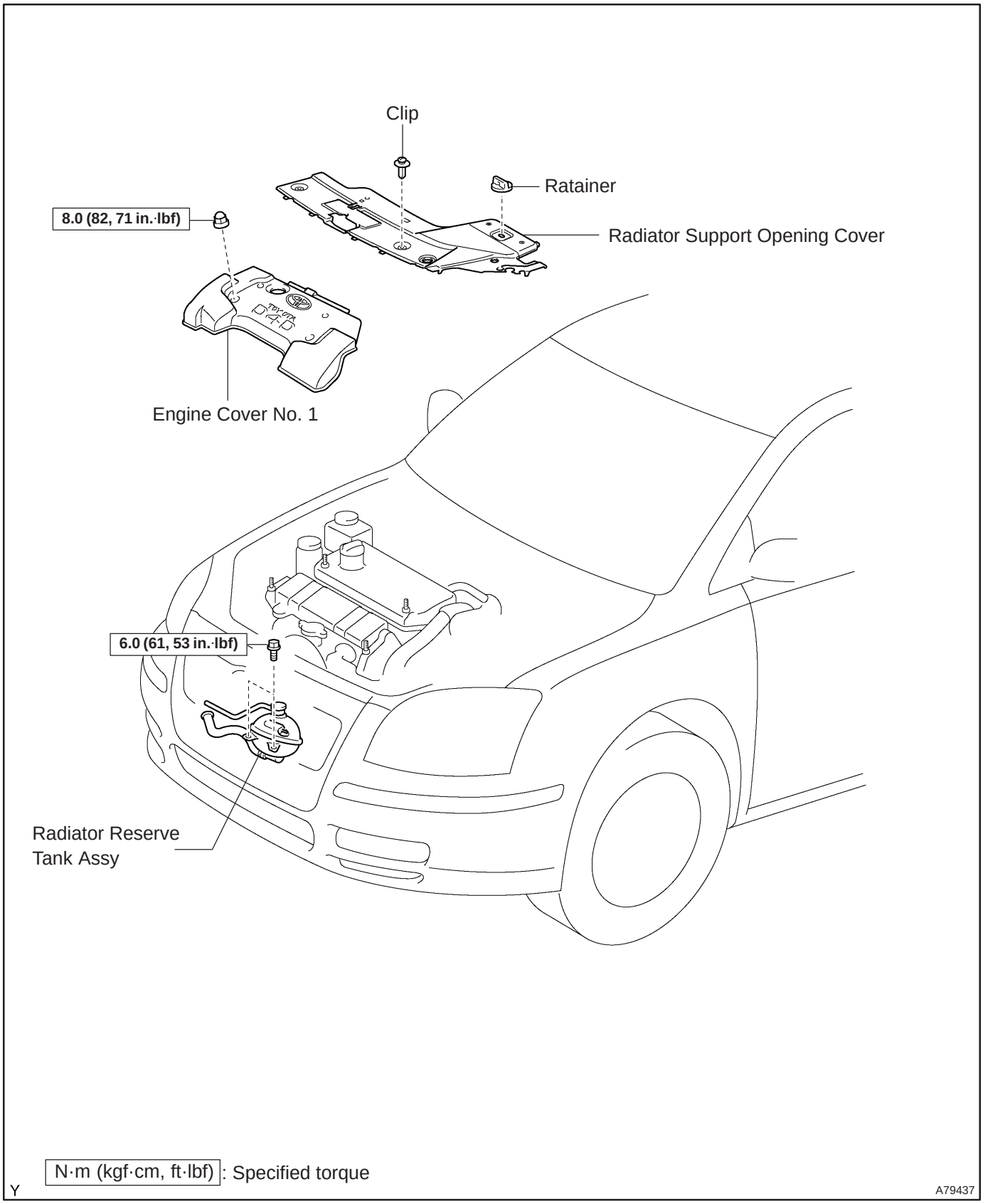

cardiagn.com

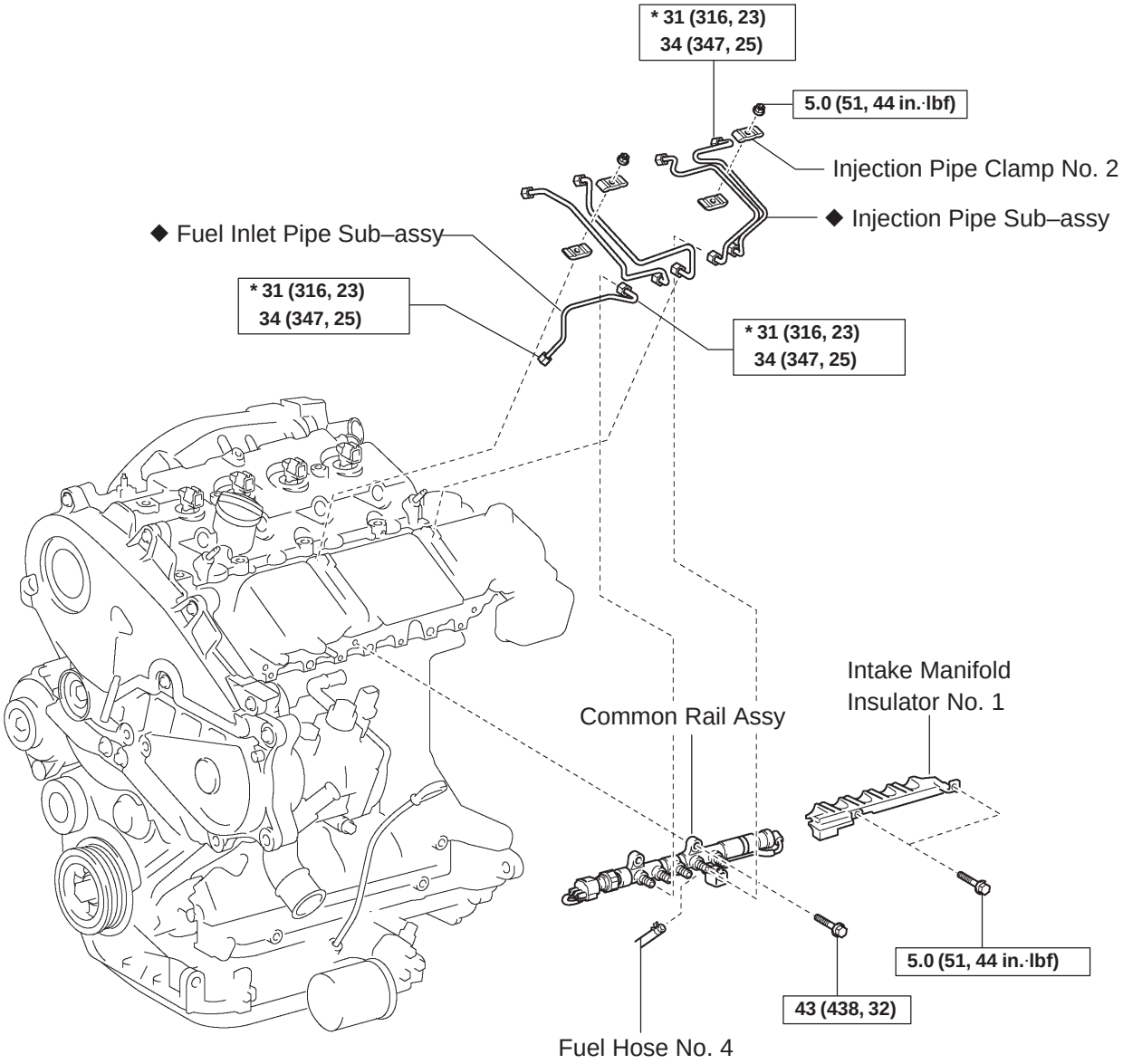

N·m (kgf·cm, ft·lbf) : Specified torque

◆ Non–reusable part

* Use SST

Y

A79438

cardiagn.com

110UC–01

REPLACEMENT

1. DRAIN ENGINE COOLANT (See page 16–44)

2. REMOVE RADIATOR SUPPORT OPENING COVER

3. REMOVE ENGINE COVER NO.1

(a) Remove the 5 nuts and the engine cover.

4. REMOVE RADIATOR RESERVE TANK ASSY (See page 16–50)

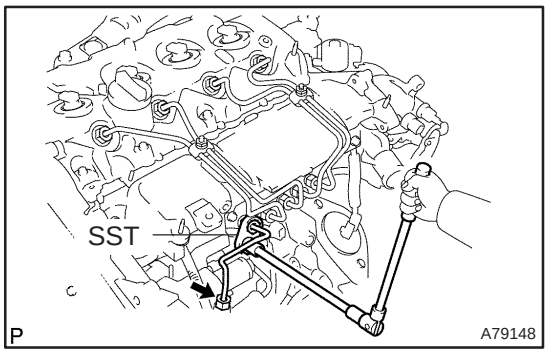

5. REMOVE FUEL INLET PIPE SUB–ASSY

NOTICE:

After removing the fuel inlet pipe, cover the common rail and the injection pump with vinyl tape to prevent dust from being introduced.

(a) Using SST, remove the fuel inlet pipe from the common rail.
SST 09023–12700

(b) Using SST, remove the fuel inlet pipe from the injection pump.
SST 09023–12700

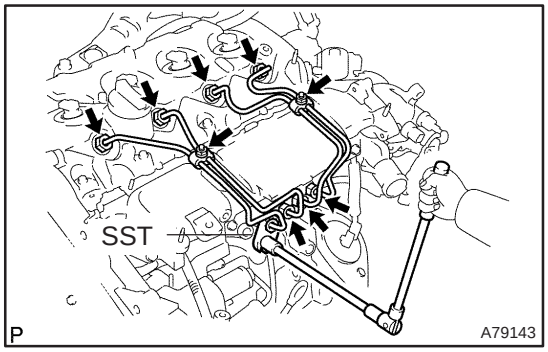

6. REMOVE INJECTION PIPE SUB–ASSY NO.1

(a) Remove the 2 nuts and the 2 upper infection pipe clamps from the intake manifold.

(b) Using SST, remove the injection pipe from the common rail side.
SST 09023–12700

(c) Using SST, remove the injection pipe from the injector side.
SST 09023–12700

(d) After removing the fuel pipe, to prevent dust or foreign objects from being introduced, cover the common rail with vinyl tape and protect the injector inlet with a vinyl or plastic bag.

7. REMOVE INJECTION PIPE SUB–ASSY NO.2

SST 09023–12700

HINT:

Perform the same procedures as injection pipe No. 1.

8. REMOVE INJECTION PIPE SUB–ASSY NO.3

SST 09023–12700

HINT:

Perform the same procedures as injection pipe No. 1.

cardiagn.com

9. REMOVE INJECTION PIPE SUB–ASSY NO.4
SST 09023–12700

HINT:
Perform the same procedures as injection pipe No. 1.

10. DISCONNECT FUEL HOSE NO.4

(a) Disconnect the fuel hose from the common rail.

11. REMOVE INTAKE MANIFOLD INSULATOR NO.1 (See page 11–69)

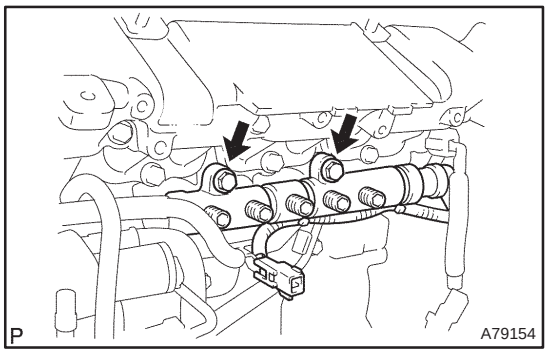

12. REMOVE COMMON RAIL ASSY

(a) Disconnect the engine wire connector from the bracket.

(b) Remove the 2 bolts and the common rail.

13. INSTALL COMMON RAIL ASSY
Torque: 43 N·m (438 kgf·cm, 32 ft·lbf)

14. INSTALL INTAKE MANIFOLD INSULATOR NO.1 (See page 11–69)

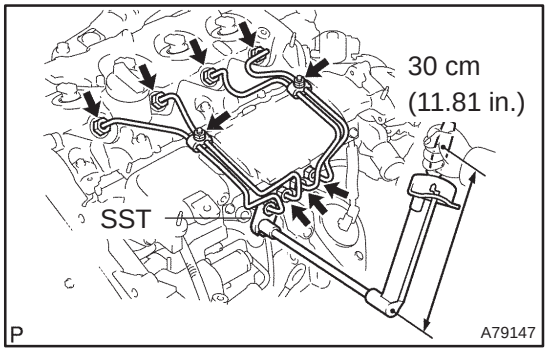

15. INSTALL INJECTION PIPE SUB–ASSY NO.1

NOTICE:

- **In case of having the common rail replaced, must replace the injection pipes, too.**
- **When assembling the pipes, perform the operation with the engine cold under room temperature.**

(a) Remove the vinyl or the plastic bag from the injector and vinyl tape from the common rail.

(b) Temporarily install the injection pipe.

cardiagn.com

(c) Using SST, tighten the nut of the injection pipe to the common rail side.
SST 09023–12700
Torque:
42 N·m (428 kgf·cm, 31 ft·lbf) for a used pipe using SST
46 N·m (469 kgf·cm, 34 ft·lbf) for a used pipe not using SST
31 N·m (316 kgf·cm, 23 ft·lbf) for a new pipe using SST
34 N·m (347 kgf·cm, 25 ft·lbf) for a new pipe not using SST

HINT:
- Use a torque wrench with a fulcrum length of 30 cm (11.81 in.)
- Check if the used pipe has deflection or is installed properly after injection pipe is reassembled. If there is deflection or if it can not be installed properly, replace the used pipe with a new pipe.

(d) Using SST, tighten the nut of the injection pipe to the injector side.
SST 09023–12700
Torque:
42 N·m (428 kgf·cm, 31 ft·lbf) for a used pipe using SST
46 N·m (469 kgf·cm, 34 ft·lbf) for a used pipe not using SST
31 N·m (316 kgf·cm, 23 ft·lbf) for a new pipe using SST
34 N·m (347 kgf·cm, 25 ft·lbf) for a new pipe not using SST

HINT:
- Use a torque wrench with a fulcrum length of 30 cm (11.81 in.)
- Check if the used pipe has deflection or is installed properly after injection pipe is reassembled. If there is deflection or if it can not be installed properly, replace the used pipe with a new pipe.

(e) Install the 2 upper injection pipe clamps with the 2 nuts.
Torque: 5.0 N·m (51 kgf·cm, 44 in.·lbf)

16. INSTALL INJECTION PIPE SUB–ASSY NO.2
SST 09023–12700

HINT:
Perform the same procedures as injection pipe No. 1.

17. INSTALL INJECTION PIPE SUB–ASSY NO.3
SST 09023–12700

HINT:
Perform the same procedures as injection pipe No. 1.

18. INSTALL INJECTION PIPE SUB–ASSY NO.4
SST 09023–12700

HINT:
Perform the same procedures as injection pipe No. 1.

cardiagn.com

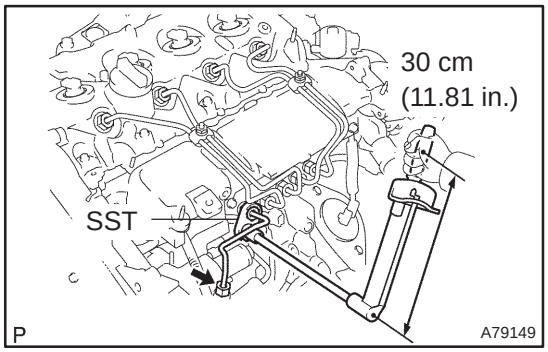

19. INSTALL FUEL INLET PIPE SUB–ASSY

NOTICE:

- **In case of having the common rail replaced, must replace fuel inlet pipe, too.**
- **When assembling the pipe, perform the operation with the engine cold under room temperature.**

(a) Temporarily install the fuel inlet pipe.

(b) Using SST, tighten the nut of the fuel inlet pipe to the common rail side.

SST 09023–12700

Torque:

42 N·m (428 kgf·cm, 31 ft·lbf) for a used pipe using SST
46 N·m (469 kgf·cm, 34 ft·lbf) for a used pipe not using SST
31 N·m (316 kgf·cm, 23 ft·lbf) for a new pipe using SST
34 N·m (347 kgf·cm, 25 ft·lbf) for a new pipe not using SST

HINT:

- Use a torque wrench with a fulcrum length of 30 cm (11.81 in.)
- Check if the used pipe has deflection or is installed properly after inlet pipe is reassembled. If there is deflection or if it can not be installed properly, replace the used pipe with a new pipe.

(c) Using SST, tighten the nut of the fuel inlet pipe to the injection pump side.

SST 09023–12700

Torque:

42 N·m (428 kgf·cm, 31 ft·lbf) for a used pipe using SST
46 N·m (469 kgf·cm, 34 ft·lbf) for a used pipe not using SST
31 N·m (316 kgf·cm, 23 ft·lbf) for a new pipe using SST
34 N·m (347 kgf·cm, 25 ft·lbf) for a new pipe not using SST

HINT:

- Use a torque wrench with a fulcrum length of 30 cm (11.81 in.)
- Check if the used pipe has deflection or is installed properly after inlet pipe is reassembled. If there is deflection or if it can not be installed properly, replace the used pipe with a new pipe.

20. INSTALL RADIATOR RESERVE TANK ASSY (See page 16–50)

21. INSTALL ENGINE COVER NO.1
Torque: 8.0 N·m (82 kgf·cm, 71 in.·lbf)

22. ADD ENGINE COOLANT (See page 16–44)

23. CHECK FOR ENGINE COOLANT LEAKS (See page 16–37)

24. CHECK FOR FUEL LEAKS (See page 11–60)

cardiagn.com

FUEL FILTER ASSY (1CD–FTV)

110UD–01

REPLACEMENT

1. REMOVE AIR CLEANER ASSY

(a) Disconnect the connector.
(b) Remove the air cleaner cap with the air cleaner hose.
(c) Remove the air cleaner filter element.
(d) Remove the 3 bolts and the air cleaner case.

2. REMOVE FUEL FILTER ASSY

(a) Disconnect the 2 fuel hose from the fuel filter. (STD or COLD)
(b) Disconnect the 3 fuel hose from the fuel filter. (W/ ADDTIONAL HEATER)
(c) Disconnect the 2 connectors.
(d) Remove the 2 bolts and the fuel filter.

3. DRAIN FUEL

(a) Loosen the drain plug, and drain the fuel from the fuel filter.

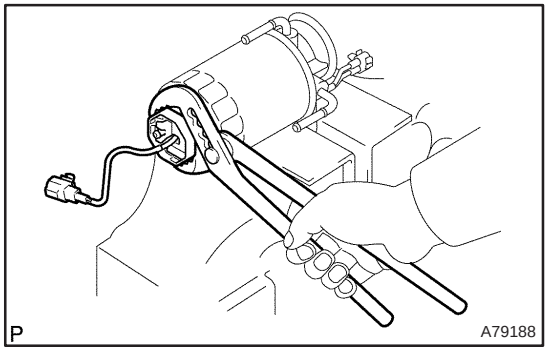

4. REMOVE LEVEL WARNING SWITCH

(a) Clamp the fuel filter in a soft jaw vise.
(b) Using pliers, remove the level warning switch.

NOTICE:

Be careful not to damage the level warning switch.

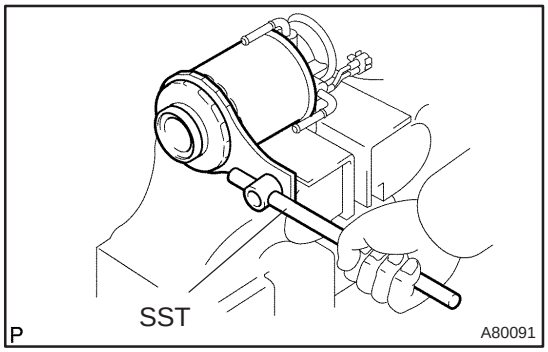

5. REMOVE FUEL FILTER ELEMENT

(a) Using SST, remove the fuel filter element.
SST 09228–64030

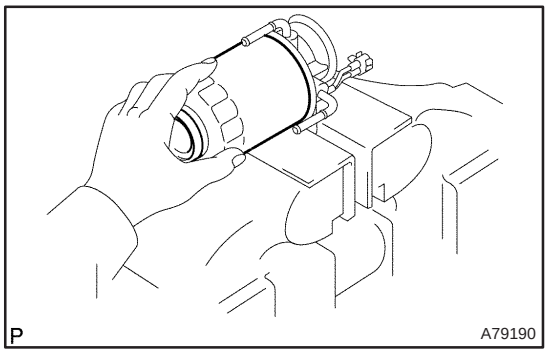

6. INSTALL FUEL FILTER ELEMENT

(a) Check and clean the fuel filter installation surface.
(b) Apply fuel to a gasket of a new fuel filter element.
(c) Lightly screw the fuel filter element into place, and tighten it until the gasket comes into contact with the seat.
(d) Tighten it additional 3/4 turn by hand.

cardiagn.com

7. INSTALL LEVEL WARNING SWITCH

(a) Install a new O–ring to the level warning switch.

(b) Apply fuel to the O–ring of the level warning switch.

(c) Install the level warning switch to the fuel filter by hand.

8. INSTALL FUEL FILTER ASSY

Torque: 18 N·m (178 kgf·cm, 13 ft·lbf)

9. INSTALL AIR CLEANER ASSY

Torque: 7.0 N·m (71 kgf·cm, 62 in.·lbf)

10. CHECK FOR FUEL LEAKS (See page 11–60)

cardiagn.com

FUEL INJECTOR ASSY (1AZ–FE)

COMPONENTS

110U0–01

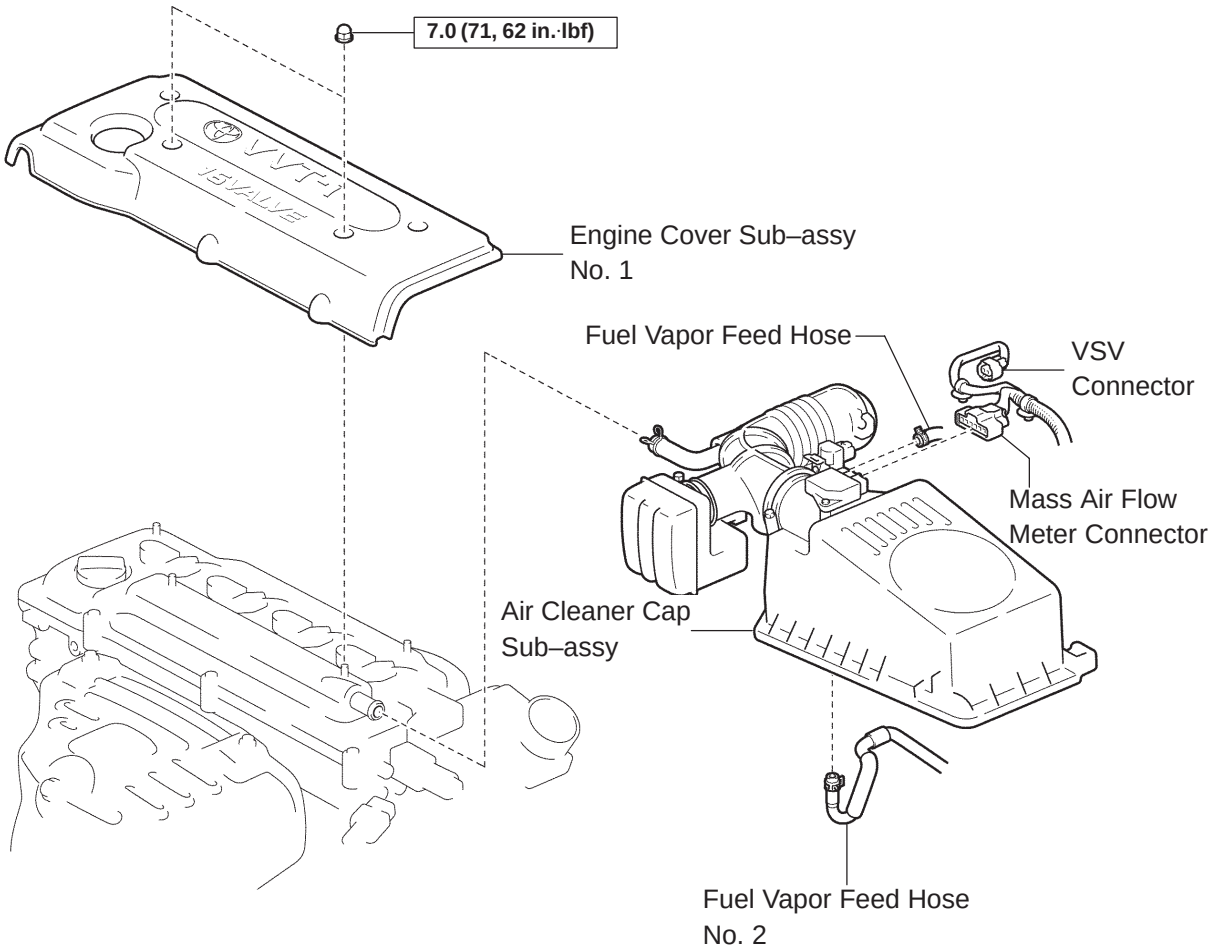

N·m (kgf·cm, ft·lbf) : Specified torque

A79730

cardiagn.com

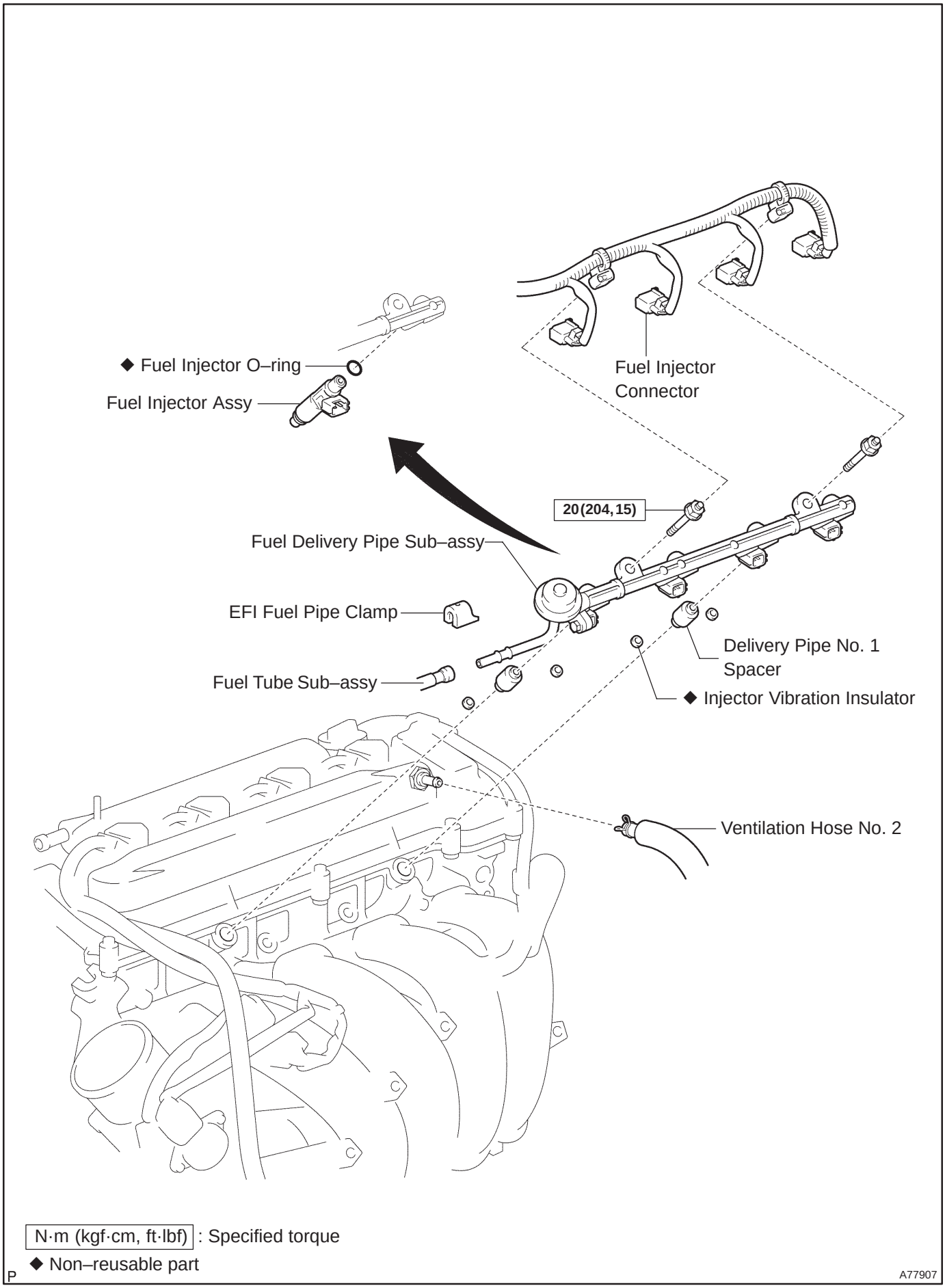

cardiagn.com

110U1–01

REPLACEMENT

1. **DISCHARGE FUEL SYSTEM PRESSURE (See page 11–15)**
2. **REMOVE ENGINE COVER SUB–ASSY NO.1 (See page 10–26)**
3. **REMOVE AIR CLEANER CAP SUB–ASSY (See page 10–26)**

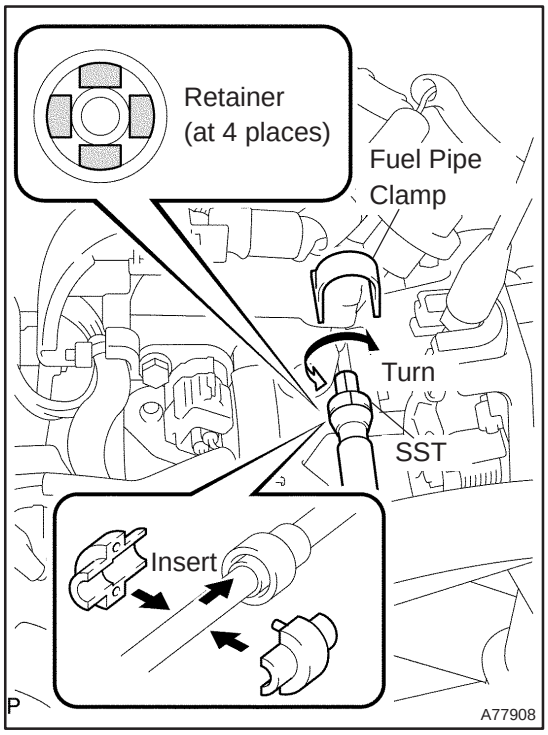

4. DISCONNECT FUEL TUBE SUB–ASSY

(a) Remove the fuel pipe clamp.

(b) Using SST, disconnect the fuel tube.

SST 09268–21010

(1) Assemble SST to the connection of the fuel tube as shown in the illustration.

(2) Turn SST, align the retainers inside the connector with SST into the connector.

(3) Push in the SST and the connector together towards the fuel tube assembly.

NOTICE:

- **Check if there is any dirt or mud on the pipe and around the connector before disconnecting them and remove the dirt as necessary.**
- **Do not bent and twist the nylon tube.**
- **When the connector and pipe are stuck, push and pull the connector to free. Pull the connector out carefully.**
- **Prevent the disconnected pipe and connector from being damaged and foreign objects from being introduced, cover with a vinyl or plastic bag.**

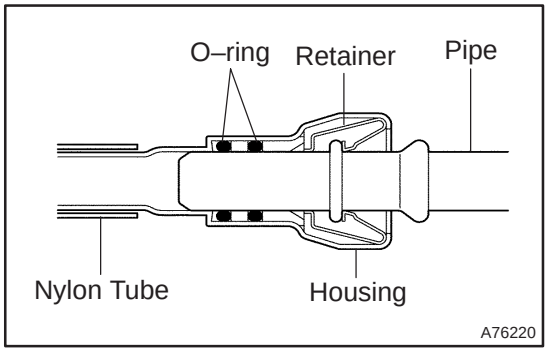

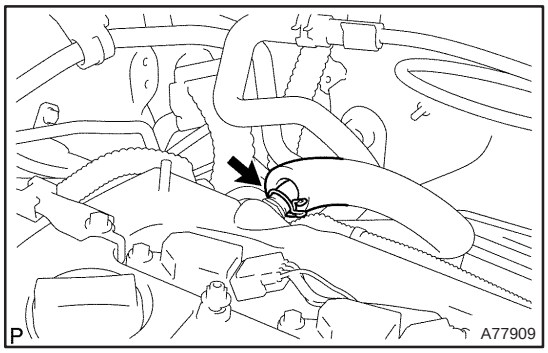

5. REMOVE FUEL DELIVERY PIPE SUB–ASSY

(a) Disconnect the ventilation hose.

cardiagn.com

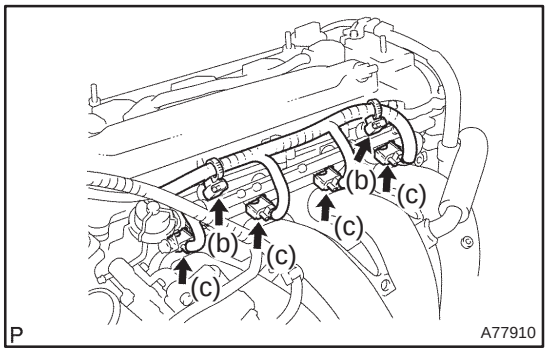

(b) Remove the 2 wire harness clamps.
(c) Disconnect the 4 fuel injector connectors.

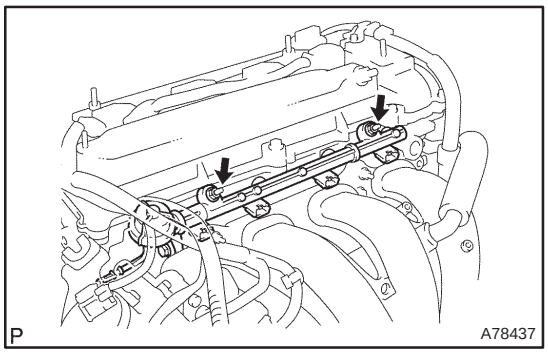

(d) Remove the 2 bolts, and then remove the fuel delivery pipe together with the 4 fuel injectors.

NOTICE:
Be careful not to drop the fuel injectors when removing the delivery pipe.

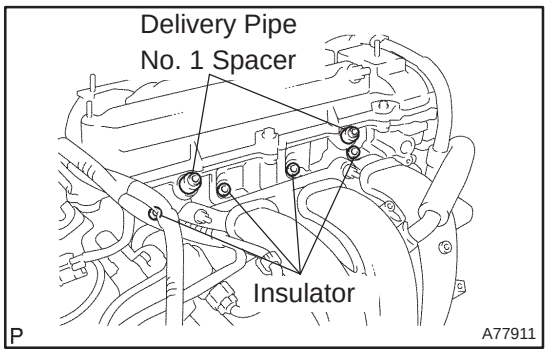

(e) Remove the 2 delivery pipe No. 1 spacers and the 4 insulators from the cylinder head.

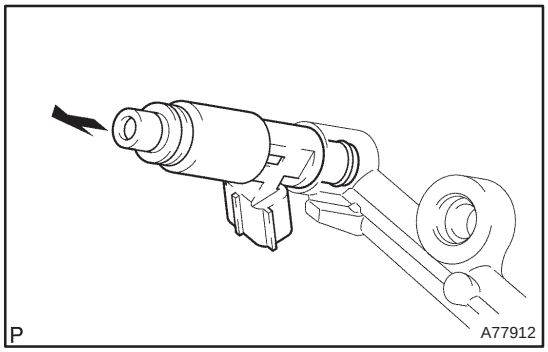

6. REMOVE FUEL INJECTOR ASSY

(a) Pull out the 4 fuel injectors.

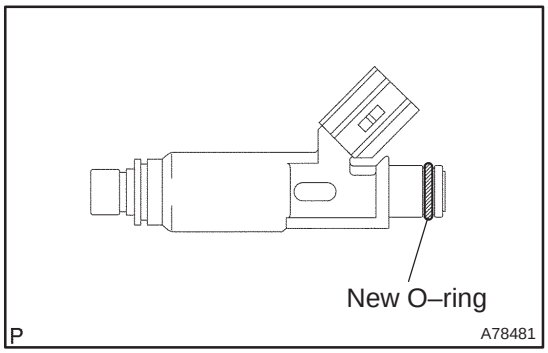

7. INSTALL FUEL INJECTOR ASSY

(a) Apply a light coat of spindle oil or gasoline to new O–rings and install them to each fuel injector.

cardiagn.com

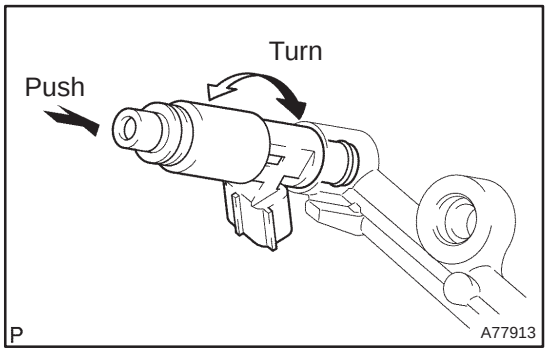

(b) Apply a light coat of spindle oil or gasoline on the place where a fuel delivery pipe contacts the O–ring.

(c) Push the fuel injector while twisting it back and forth to install it to the fuel delivery pipe.

NOTICE:

- **Be careful not to twist the O–ring.**
- **After installing the fuel injectors, check that they turn smoothly. If not, reinstall it with a new O–ring.**

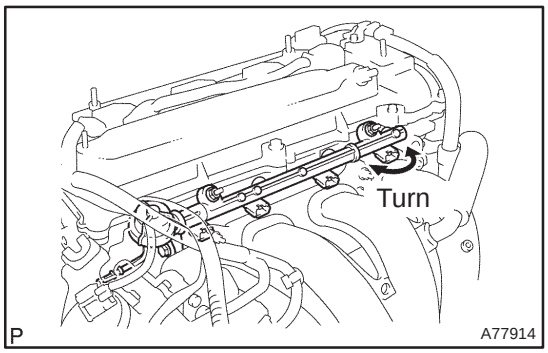

8. INSTALL FUEL DELIVERY PIPE SUB–ASSY

(a) Install 4 new insulators and the 2 delivery pipe No. 1 spacers to the cylinder head.

(b) Place the fuel delivery pipe and the 4 fuel injectors together to the cylinder head.

NOTICE:

Be careful not to drop the fuel injectors when installing the fuel delivery pipe.

(c) Temporarily install 2 bolts which are used to secure the fuel delivery pipe to the cylinder head.

(d) Check that the fuel injectors rotate smoothly.

If the fuel injectors do not rotate smoothly, the probable cause is incorrect installation of O–ring. Replace with the O–ring.

(e) Tighten the 2 bolts.
Torque: 20 N·m (204 kgf·cm, 15 ft·lbf)

(f) Connect the 4 fuel injector connectors.

(g) Install the 2 wire harness clamps.

(h) Connect the ventilation hose.

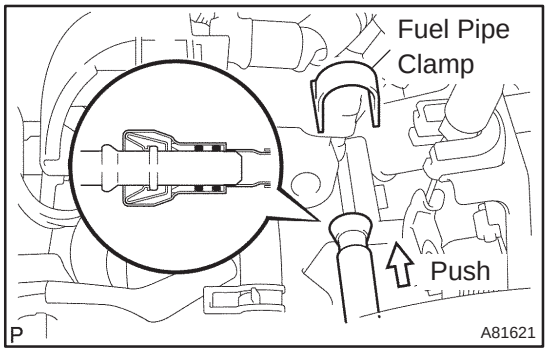

9. CONNECT FUEL TUBE SUB–ASSY

(a) Push in the connector to the pipe until it makes ”click” sound.

NOTICE:

- **Check if there is any damage or foreign objects on the connected part.**
- **After connecting, check if the connector and the pipe are securely connected by pulling on them.**

(b) Install the fuel pipe clamp.

10. INSTALL AIR CLEANER CAP SUB–ASSY

11. CHECK FOR FUEL LEAKS (See page 11–19)

12. INSTALL ENGINE COVER SUB–ASSY NO.1 (See page 10–26)

cardiagn.com

FUEL INJECTOR ASSY (1AZ–FSE)

COMPONENTS

110TC–01

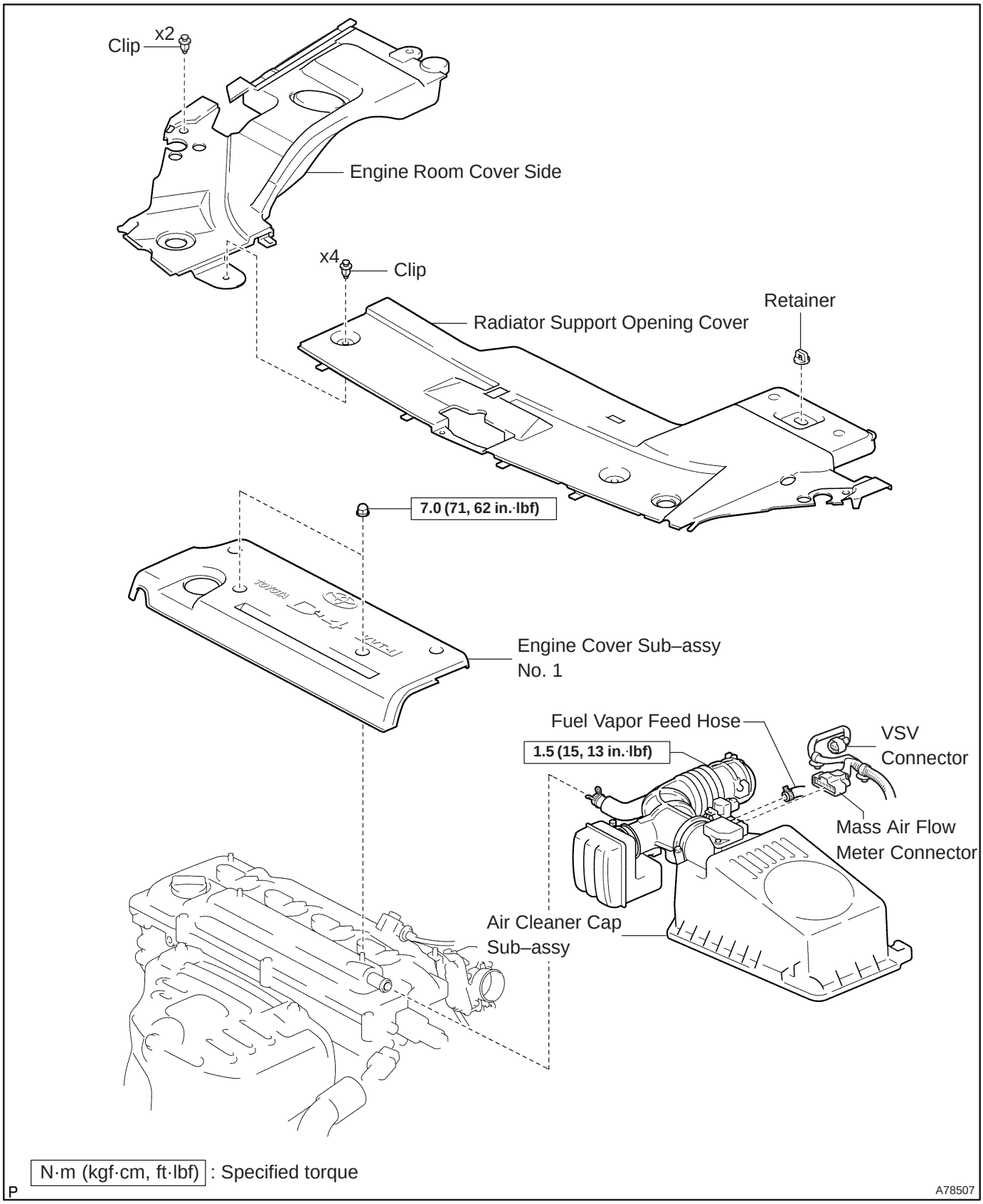

cardiagn.com

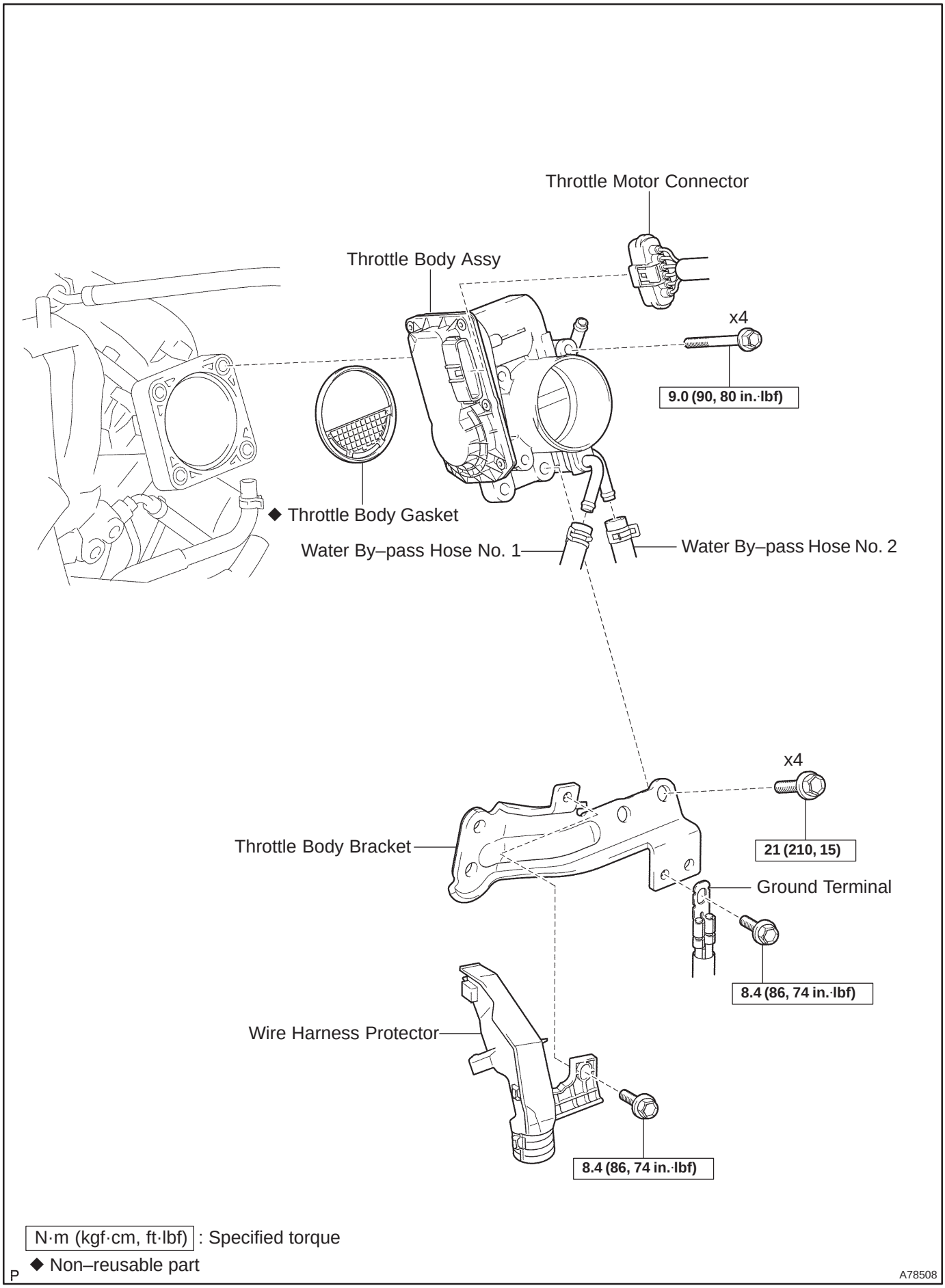

cardiagn.com

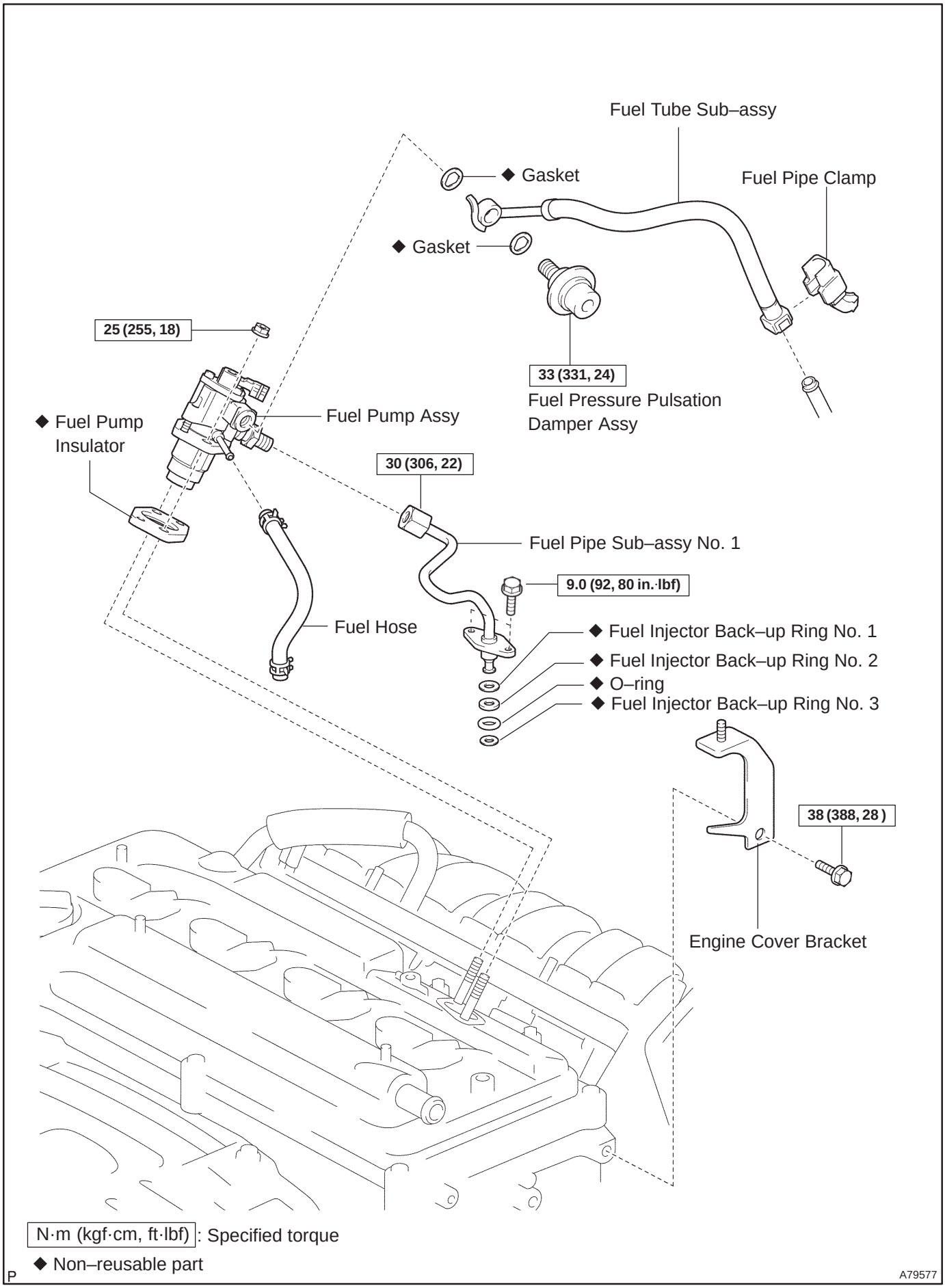

cardiagn.com

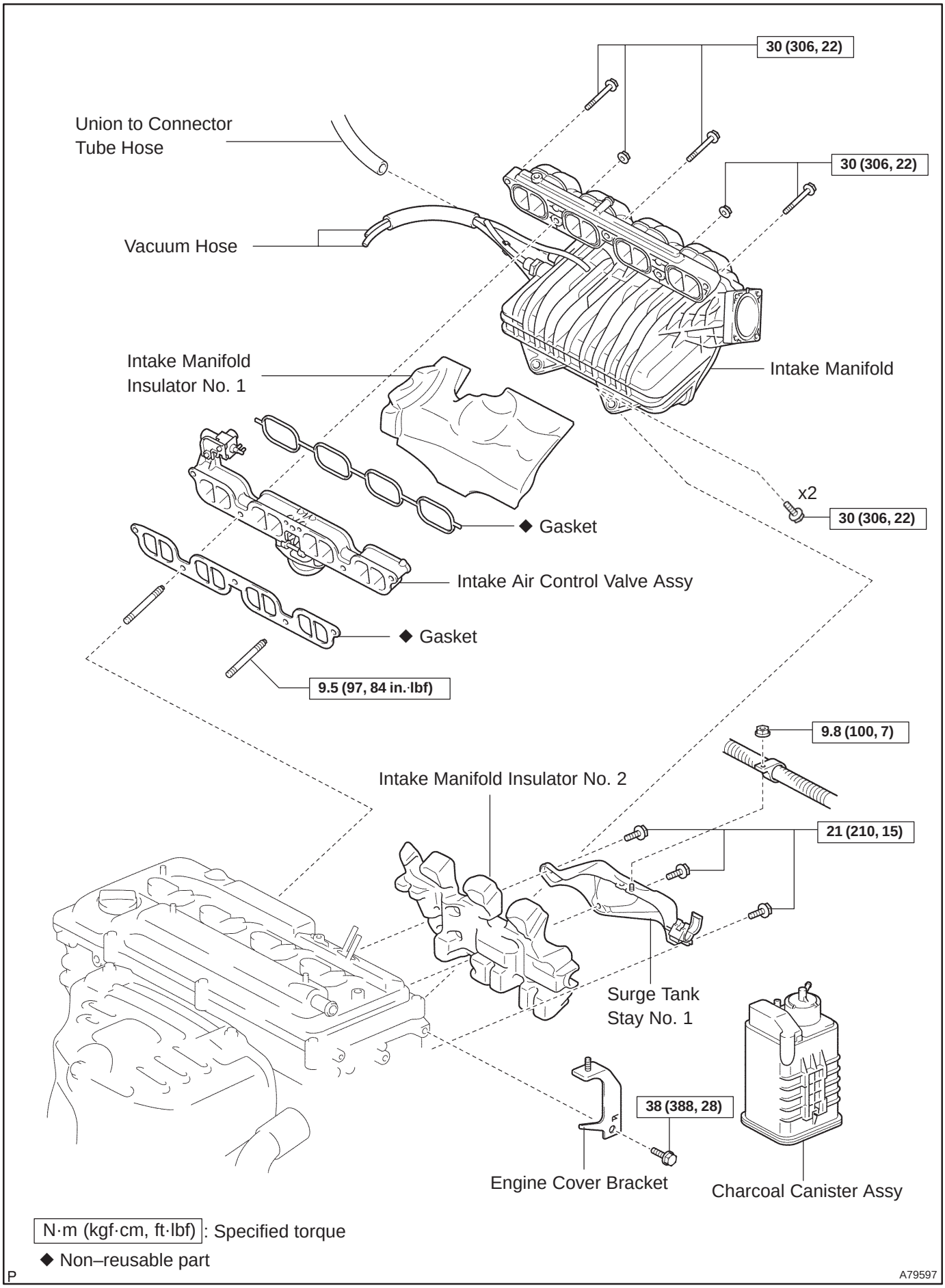

cardiagn.com

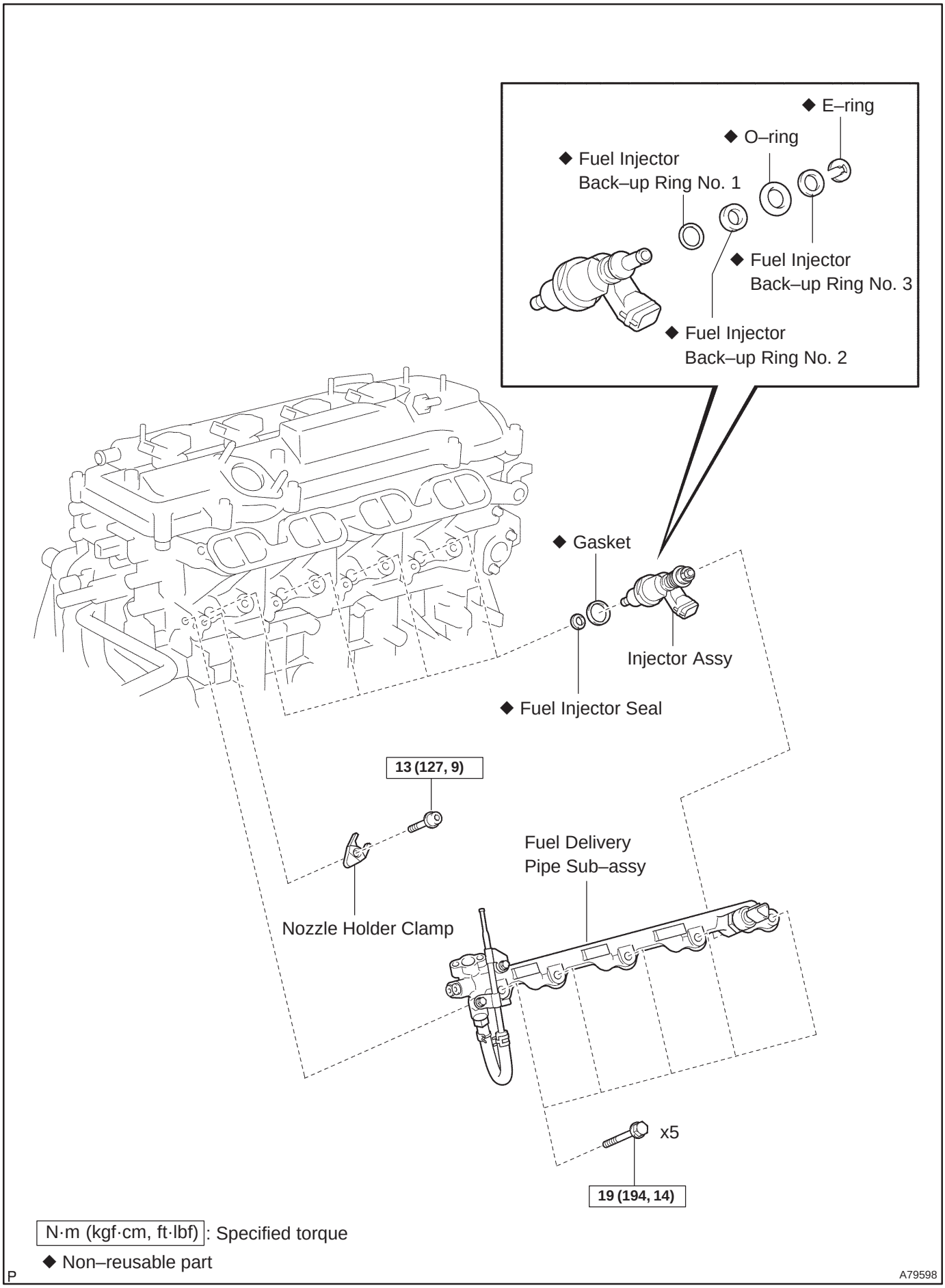

cardiagn.com

FUEL INJECTOR ASSY (1ZZ–FE/3ZZ–FE)

110TY–01

COMPONENTS

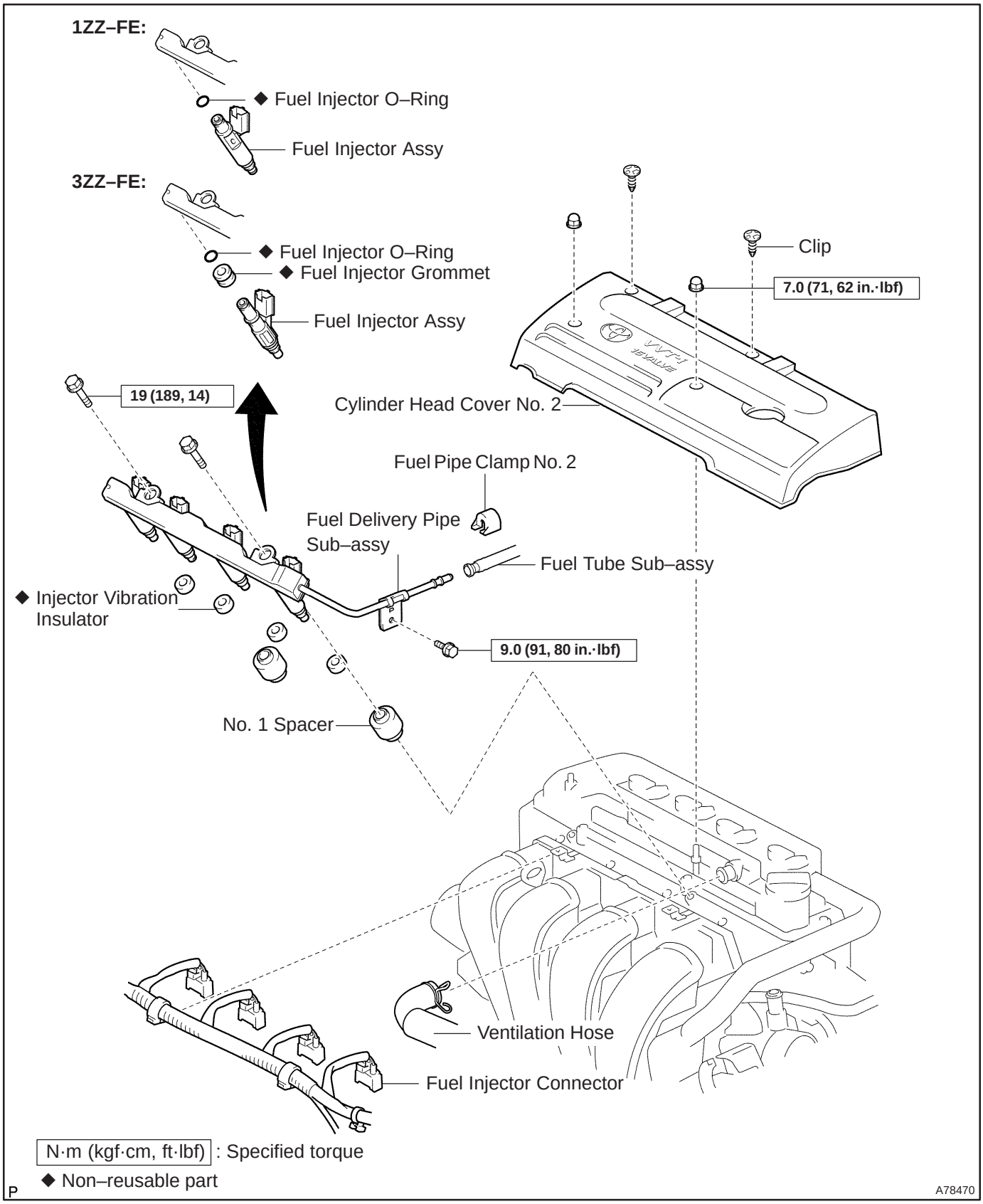

cardiagn.com

REPLACEMENT

1. **DISCHARGE FUEL SYSTEM PRESSURE (See page 11–1)**
2. **REMOVE CYLINDER HEAD COVER NO.2 (See page 10–9)**

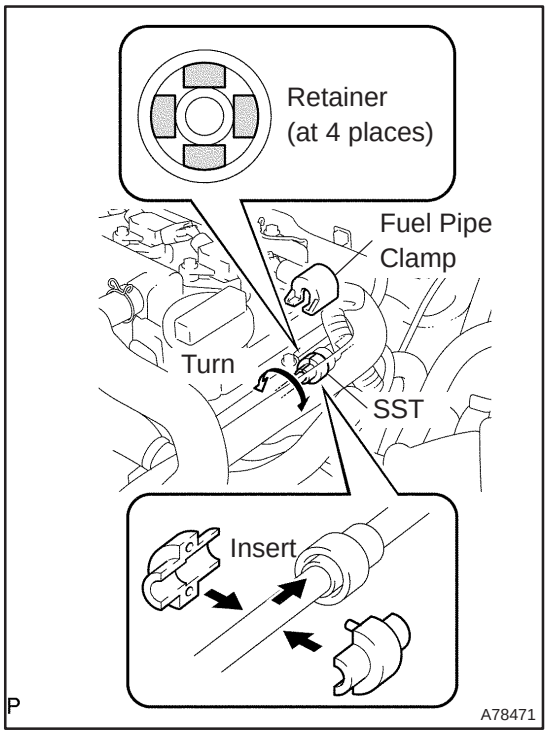

3. **SEPARATE FUEL TUBE SUB–ASSY**

(a) Remove the fuel pipe clamp.

(b) Using SST, disconnect the fuel tube.

SST 09268–21010

(1) Assemble SST to the connection of the fuel tube as shown in the illustration.

(2) Turn SST, align the retainers inside the connector with SST into the connector.

(3) Push in the SST and the connector together towards the fuel tube assembly.

NOTICE:

- **Check if there is any dirt or mud on the pipe and around the connector before disconnecting them and remove the dirt as necessary.**
- **Do not bent and twist the nylon tube.**
- **When the connector and pipe are stuck, push and pull the connector to free. Pull the connector out carefully.**
- **Prevent the disconnected pipe and connector from being damaged and foreign objects from being introduced, cover with a vinyl or plastic bag.**

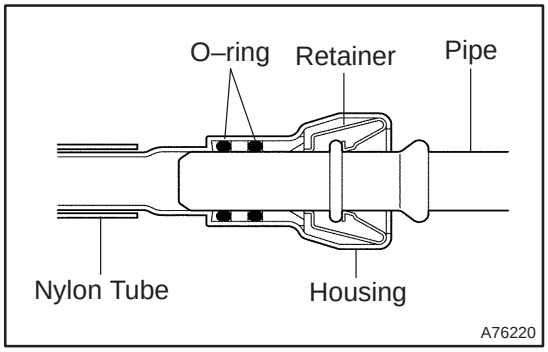

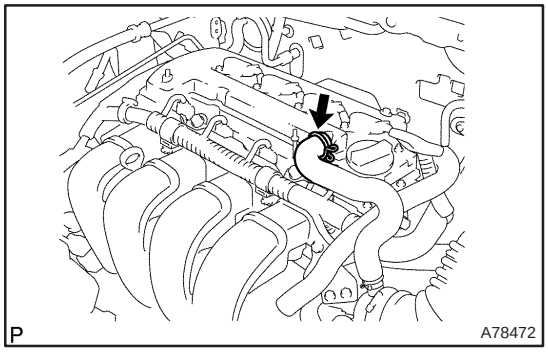

4. **REMOVE FUEL DELIVERY PIPE SUB–ASSY**

(a) Disconnect the ventilation hose.

cardiagn.com

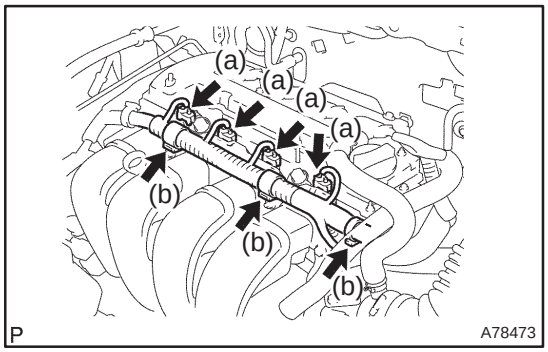

(b) Disconnect the 4 fuel injector connectors.
(c) Remove the 3 wire harness clamps.

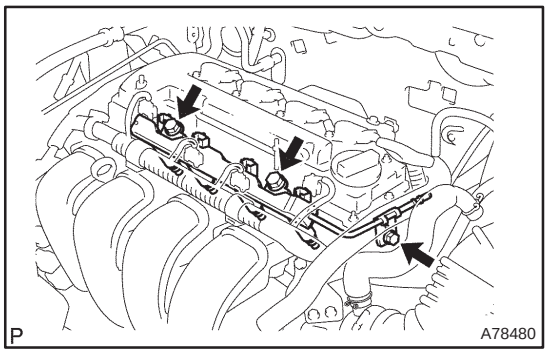

(d) Remove the 3 bolts, and then remove the fuel delivery pipe together with the 4 fuel injectors.

NOTICE:

Be careful not to drop the fuel injectors when removing the fuel delivery pipe.

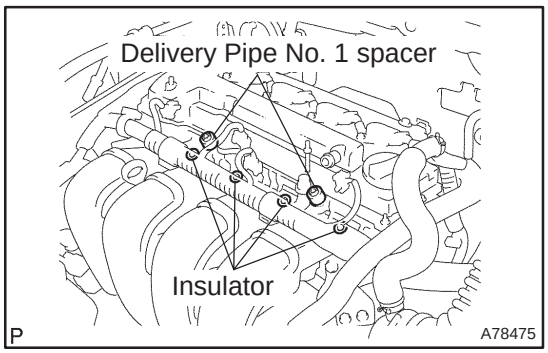

(e) Remove the 2 delivery pipe No. 1 spacers and the 4 insulators from the cylinder head.

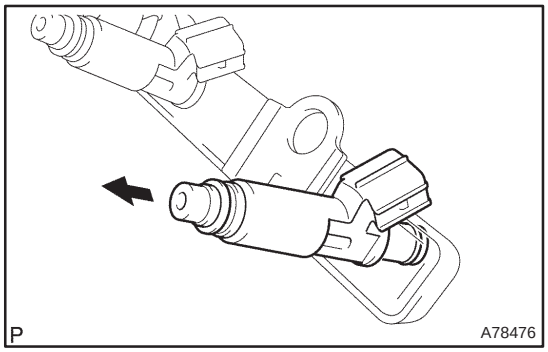

5. REMOVE FUEL INJECTOR ASSY

(a) Pull out the 4 fuel injectors from the fuel delivery pipe.

cardiagn.com

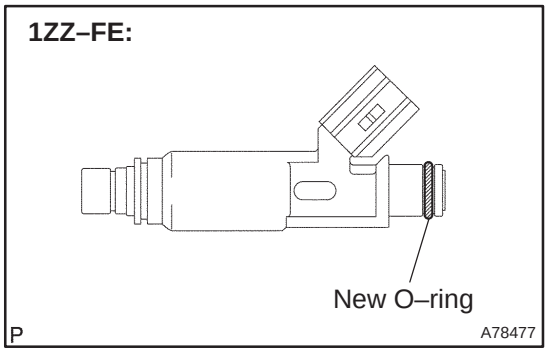

6. INSTALL FUEL INJECTOR ASSY

(a) Install new grommets to each fuel injector. (3ZZ–FE)

(b) Apply a light coat of spindle oil or gasoline to new O–rings, and install them to each fuel injector.

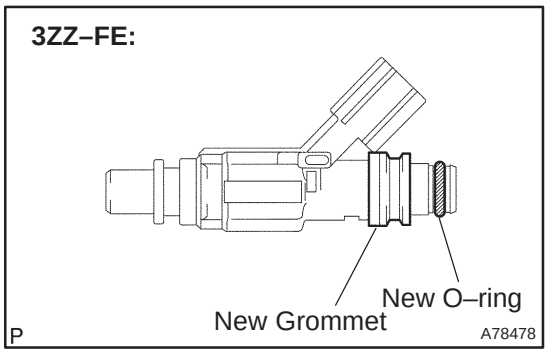

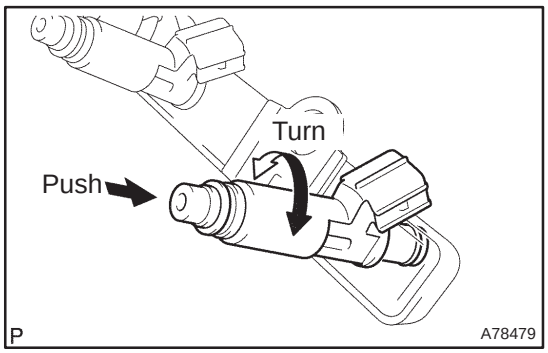

(c) Apply a light coat of spindle oil or gasoline on the place where the fuel delivery pipe contacts the O–ring.

(d) Push the fuel injector while twisting it back and forth to install it to the fuel delivery pipe.

NOTICE:

- **Be careful not to twist the O–ring.**
- **After installing the fuel injectors, check that they turn smoothly. If not, reinstall it with a new O–ring.**

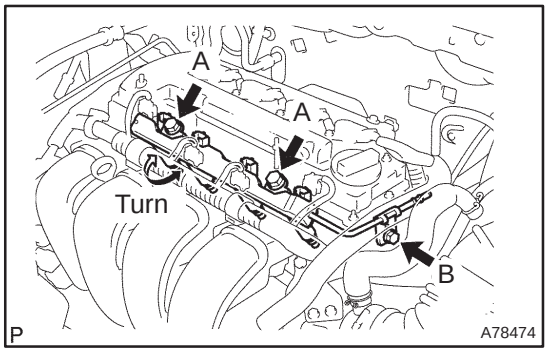

7. INSTALL FUEL DELIVERY PIPE SUB–ASSY

(a) Instal 4 new insulators and the 2 delivery pipe No. 1 spacers to the cylinder head.

(b) Place the fuel delivery pipe and 4 fuel injectors together to the cylinder head.

NOTICE:

Be careful not to drop the fuel injectors when installing the fuel delivery pipe.

(c) Temporarily install 3 bolts which are used to secure the fuel delivery pipe to the cylinder head.

(d) Check that the fuel injectors rotate smoothly.

If fuel injectors do not rotate smoothly, the probable cause is incorrect installation of O–ring. Replace with the O–ring.

(e) Tighten the 3 bolts.

Torque:

19 N·m (194 kgf·cm, 14 ft·lbf) for bolt A

9.0 N·m (92 kgf·cm, 80 in.·lbf) for bolt B

(f) Install the 3 wire harness clamps.

(g) Connect the 4 fuel injector connectors.

(h) Connect the ventilation hose.

cardiagn.com

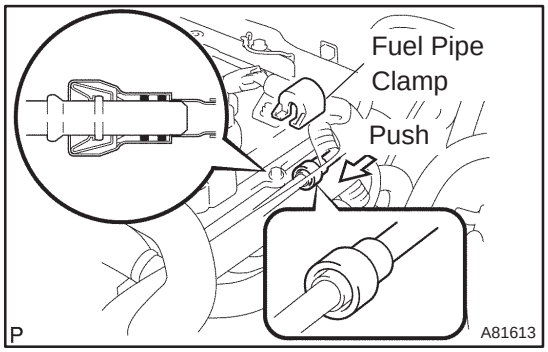

8. CONNECT FUEL TUBE SUB–ASSY

(a) Push in the connector to the pipe until it makes ”click” sound.

NOTICE:

- **Check if there is any damage or foreign objects on the connected part.**
- **After connecting, check if the connector and the pipe are securely connected by pulling on them.**

(b) Install the fuel pipe clamp.

9. CHECK FOR FUEL LEAKS (See page 11–5)

10. INSTALL CYLINDER HEAD COVER NO.2 (See page 10–9)

cardiagn.com

FUEL PRESSURE PULSATION DAMPER ASSY (1AZ–FE)

110U2–01

REPLACEMENT

1. **DISCHARGE FUEL SYSTEM PRESSURE (See page 11–15)**
2. **REMOVE ENGINE COVER SUB–ASSY NO.1 (See page 10–26)**
3. **REMOVE AIR CLEANER CAP SUB–ASSY (See page 10–26)**
4. **DISCONNECT FUEL TUBE SUB–ASSY (See page 11–26)**
   SST 09268–21010

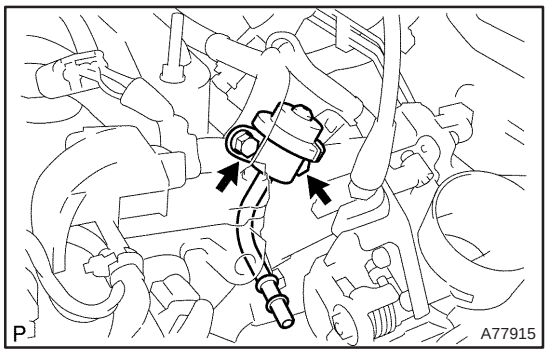

5. **REMOVE FUEL PRESSURE PULSATION DAMPER ASSY**
   (a) Remove the 2 bolts, and then remove the fuel pressure pulsation damper.

6. **INSTALL FUEL PRESSURE PULSATION DAMPER ASSY**
   (a) Apply a light coat of spindle oil or gasoline to a new O–ring, and install it to the fuel pressure pulsation damper.
   (b) Install the fuel pressure pulsation damper with the 2 bolts.
   Torque: 9.0 N·m (92 kgf·cm, 80 in.·lbf)
7. **CONNECT FUEL TUBE SUB–ASSY (See page 11–26)**
8. **INSTALL AIR CLEANER CAP SUB–ASSY**
9. **CHECK FOR FUEL LEAKS (See page 11–19)**
10. **INSTALL ENGINE COVER SUB–ASSY NO.1 (See page 10–26)**

cardiagn.com

FUEL PUMP ASSY (1AZ–FSE)

COMPONENTS

110TA–01

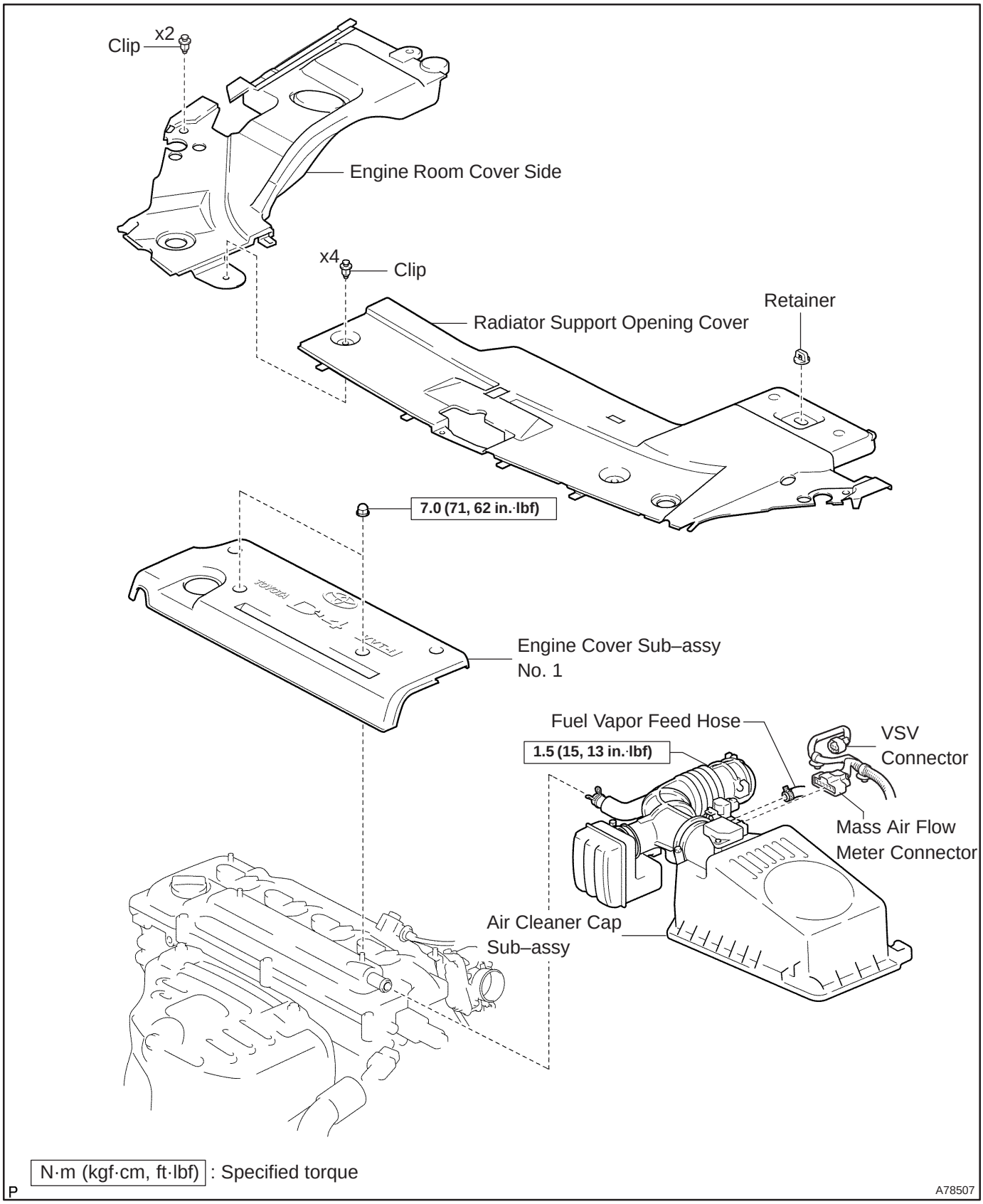

cardiagn.com

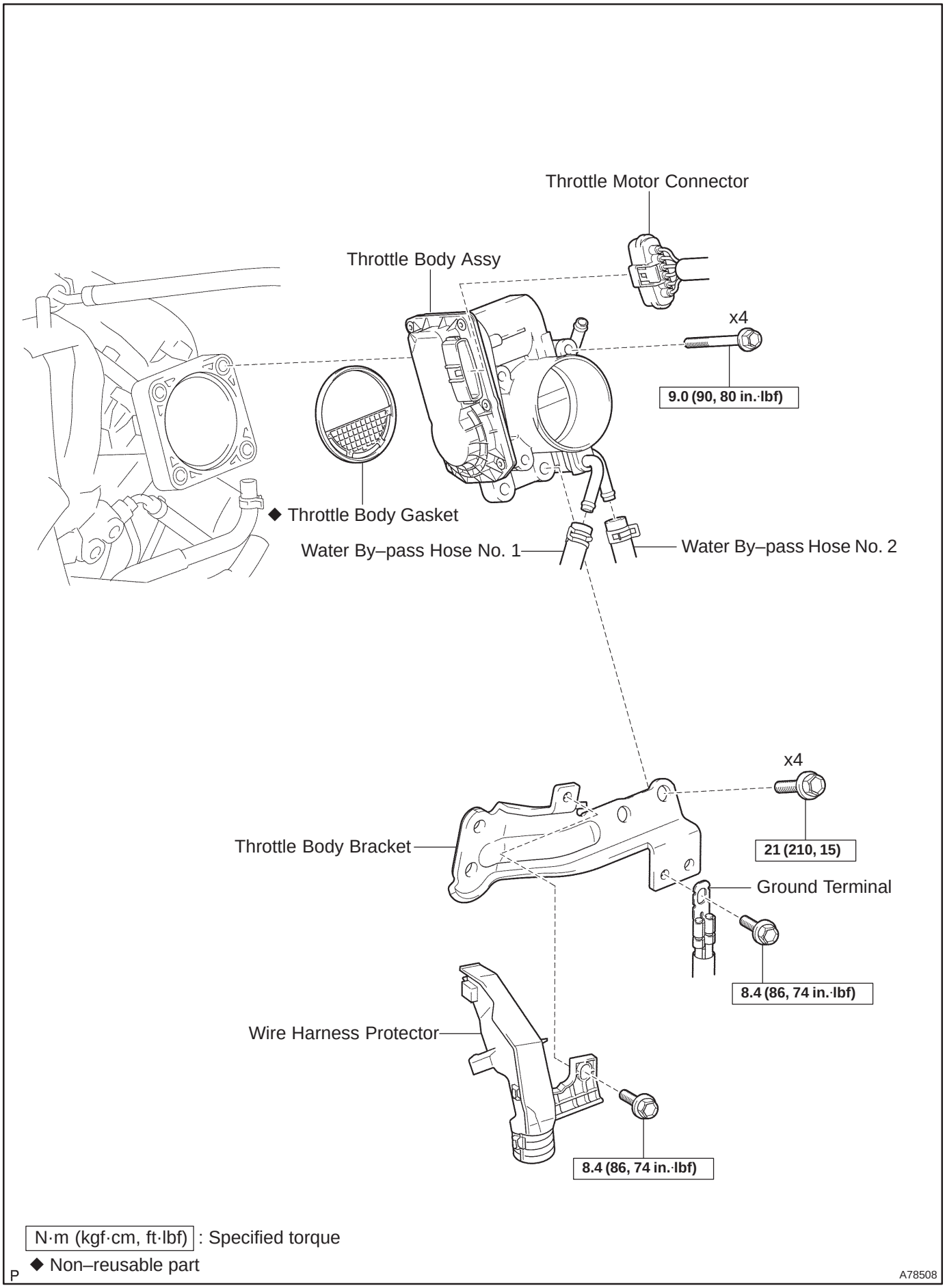

cardiagn.com

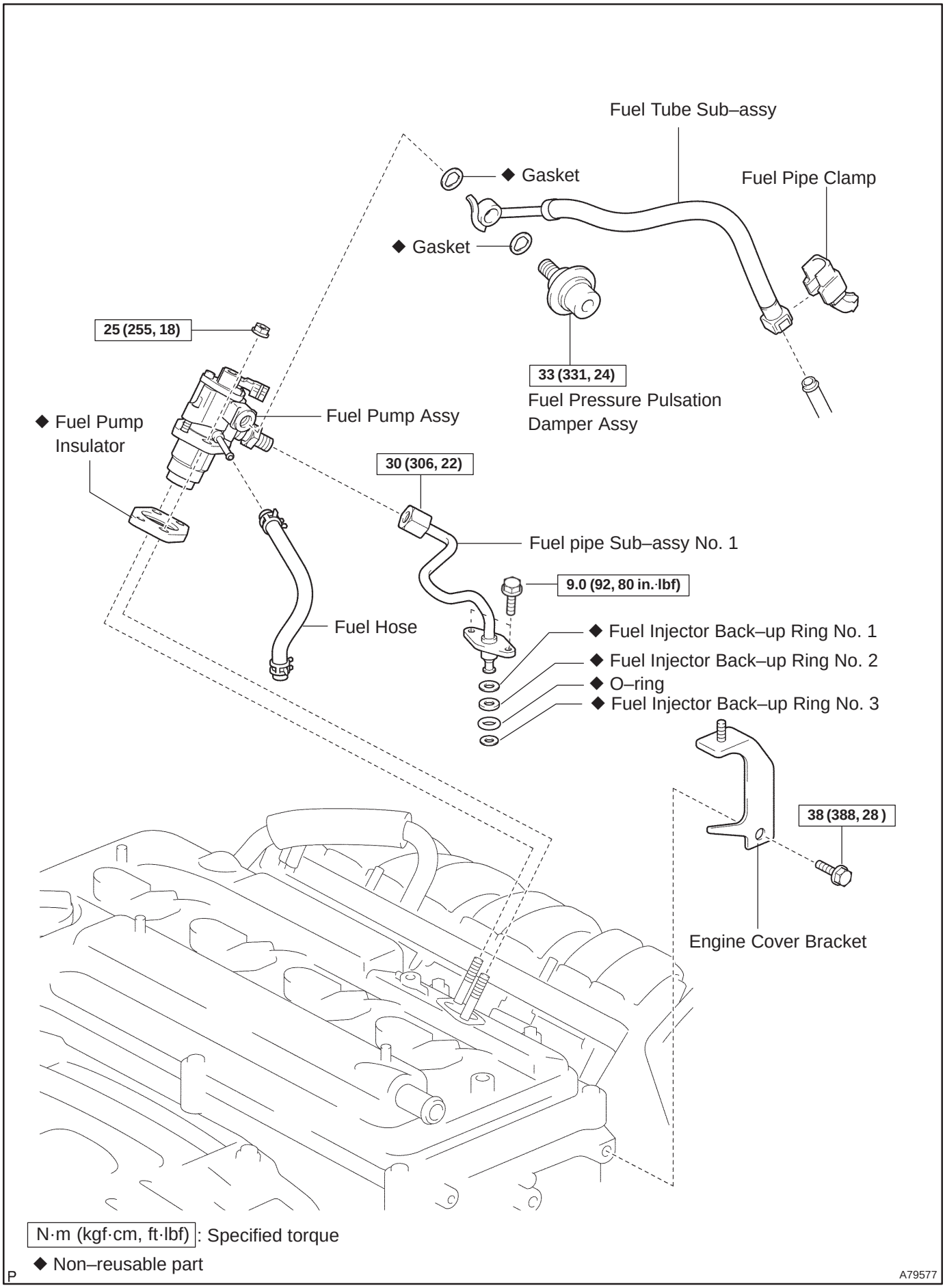

cardiagn.com

REPLACEMENT

1. **DISCHARGE FUEL SYSTEM PRESSURE (See page 11–30)**
2. **REMOVE RADIATOR SUPPORT OPENING COVER (See page 18–16)**
3. **REMOVE ENGINE COVER SUB–ASSY NO.1 (See page 10–44)**
4. **REMOVE AIR CLEANER CAP SUB–ASSY (See page 10–44)**

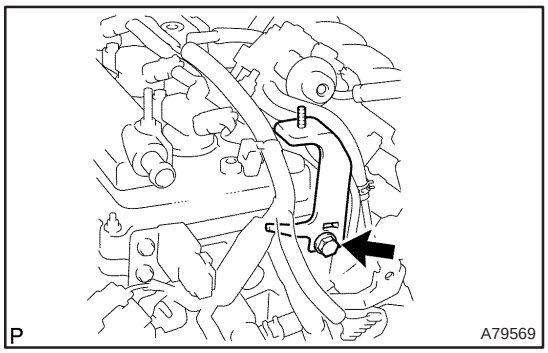

5. REMOVE ENGINE COVER BRACKET

(a) Remove the bolt and the engine cover bracket.

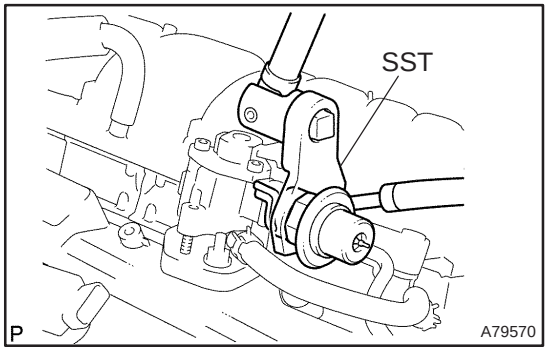

6. REMOVE FUEL PRESSURE PULSATION DAMPER ASSY

(a) Disconnect the fuel tube sub–assy. (See page 11–30)

(b) Using SST, remove the fuel pressure pulsation damper assy, the fuel tube sub–assy and the 2 gasket.
SST 09617–24011

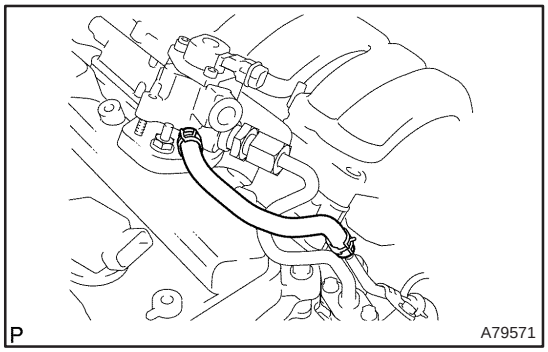

7. REMOVE FUEL PIPE SUB–ASSY NO.1

(a) Remove the fuel hose.

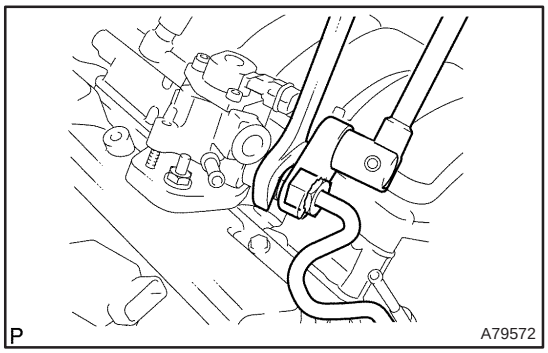

(b) Clamp the union bolt on the fuel pump assy with a 21 mm wrench and remove the fuel pipe sub–assy No. 1 from the fuel pump assy using a 19 mm union–nut wrench.

NOTICE:

Do not loosen the union bolt on the fuel pump assy. If it become loose, replace the fuel pump assy with new fuel pump assy.

cardiagn.com

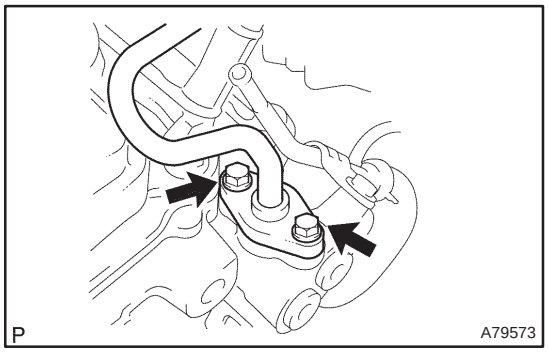

(c) Remove the 2 bolts first, then remove the fuel pipe sub–assy No. 1 from the fuel delivery pipe sub–assy.

NOTICE:

Be careful not to damage both the sealing surfaces of the fuel delivery pipe and the fuel pump when removing the fuel pipe No.1.

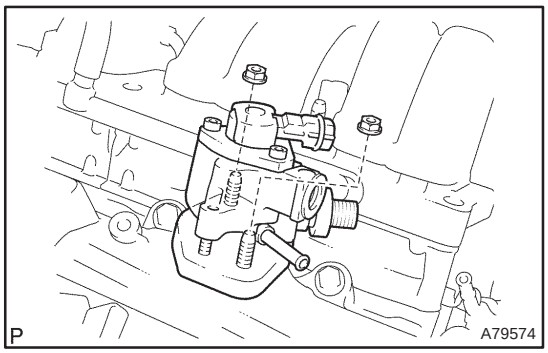

8. REMOVE FUEL PUMP ASSY

(a) Disconnect the fuel pump assy connector.

(b) Remove the 2 nuts and the fuel pump assy.

(c) Remove the fuel pump insulator.

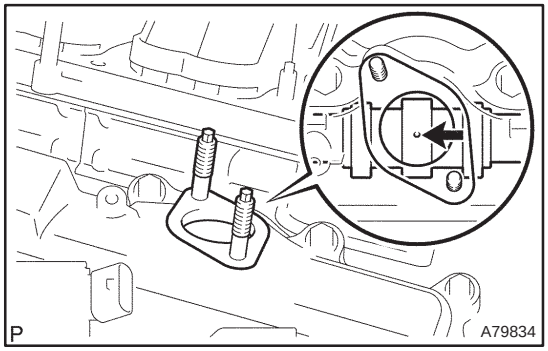

9. INSTALL FUEL PUMP ASSY

(a) Turn the crankshaft and set the camshaft to the position where the oil port of the camshaft can be seen from the fuel pump mounting hole.

(b) From the fuel pump mounting hole of the cylinder head, pour 35 to 45cc (2.14 to 2.75 cu in) engine oil into the cylinder head.

(c) For more smooth rotation, apply engine oil on the cam lobe which can be seen from the fuel pump mounting hole using fingers.

(d) Set a new fuel pump insulator and fuel pump assy with the 2 nuts.

Torque: 25 N·m (255 kgf·cm, 18 ft·lbf)

cardiagn.com

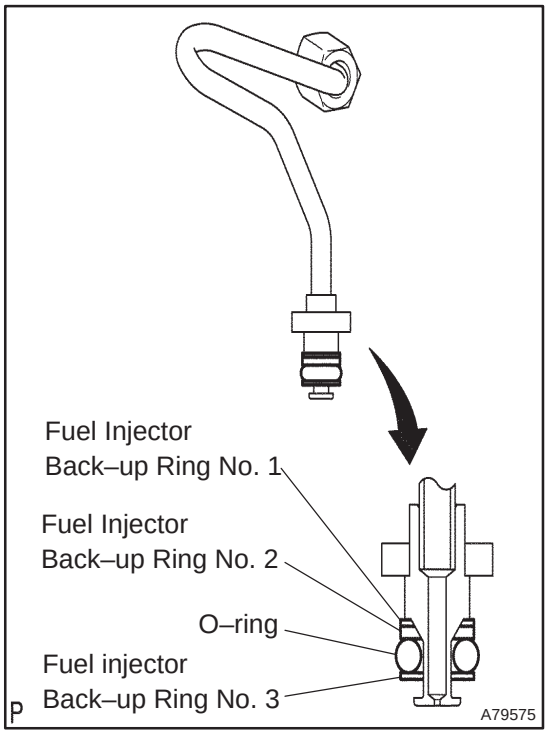

10. INSTALL FUEL PIPE SUB–ASSY NO.1

(a) Attach a new O–ring, fuel injector back–up ring No. 1, No. 2 and No. 3 to the fuel pipe sub–assy No.1.

(b) Apply a small amount of fuel on the O–ring and install the fuel pipe sub–assy No. 1 to the fuel pump assy and the fuel delivery pipe sub–assy.

NOTICE:

Be careful not to damage both the sealing surfaces of the fuel delivery pipe and the fuel pump when installing the fuel pipe No.1.

(c) Tighten the nut by hand to attach the fuel pipe sub–assy No. 1 to the fuel pump assy.

(d) In order to secure the fuel pipe sub–assy No. 1 to the fuel delivery pipe sub–assy, tighten the 2 bolts to the specified torque.
Torque: 9.0 N·m (92 kgf·cm, 80 in.·lbf)

(e) Clamp the union bolt on the fuel pump assy with a 21 mm wrench and tighten the nut with the specified torque to secure the fuel pipe sub–assy No. 1 to the fuel pump assy using a 19 mm union–nut wrench.
Torque: 30 N·m (306 kgf·cm, 22 ft·lbf)

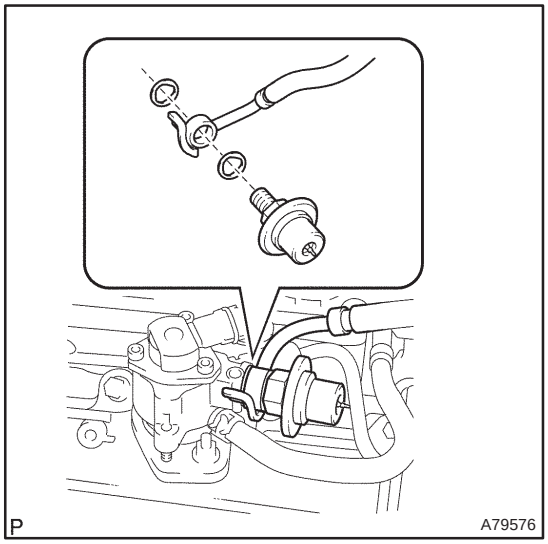

11. INSTALL FUEL PRESSURE PULSATION DAMPER ASSY

(a) Install the fuel pulsation damper assy to the fuel pump assy after fitting new 2 gaskets and fuel tube sub–assy between those assys.

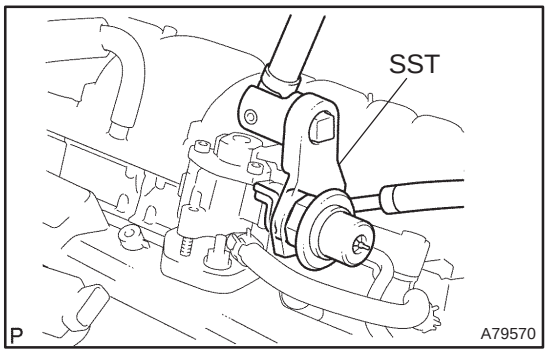

(b) Using SST, install the fuel pressure pulsation damper assy to the fuel pump assy.
SST 09617–24011
Torque: 33 N·m (331 kgf·cm, 24 ft·lbf)

(c) Connect the fuel tube sub–assy.

cardiagn.com

12. INSTALL ENGINE COVER BRACKET

(a) Install the engine cover bracket with the bolt.
Torque: 38 N·m (388 kgf·cm, 28 ft·lbf)

13. INSTALL AIR CLEANER CAP SUB–ASSY (See page 10–44)

14. CHECK FOR FUEL LEAKS

15. INSTALL ENGINE COVER SUB–ASSY NO.1
Torque: 7.0 N·m (71 kgf·cm, 62 in.·lbf)

16. INSTALL RADIATOR SUPPORT OPENING COVER

cardiagn.com

FUEL PUMP ASSY (GASOLINE)

110U3–01

COMPONENTS

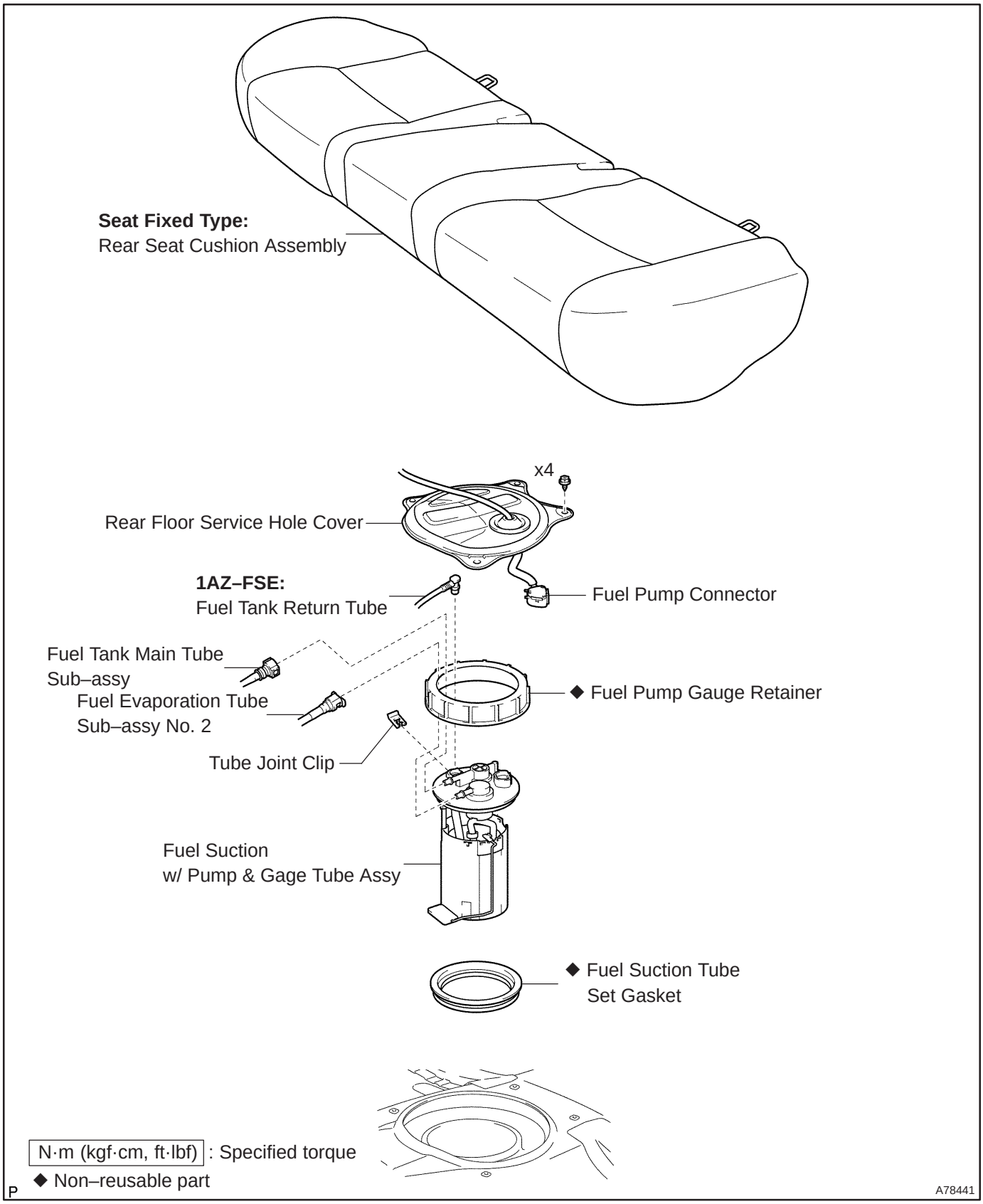

cardiagn.com

REPLACEMENT

1. DISCHARGE FUEL SYSTEM PRESSURE

HINT:

- 1ZZ–FE/3ZZ–FE: 11–1
- 1AZ–FE: 11–15
- 1AZ–FSE: 11–30

2. REMOVE REAR SEAT CUSHION ASSY (SEAT FIXED TYPE) (See page 72–32)

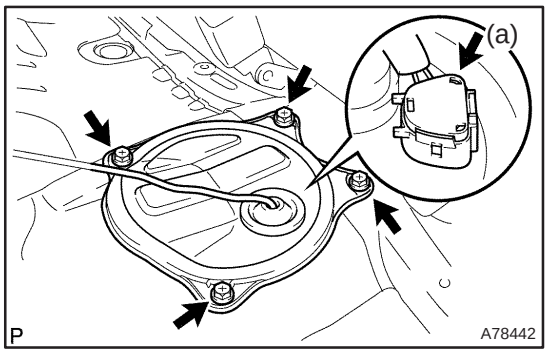

3. REMOVE REAR FLOOR SERVICE HOLE COVER

(a) Remove the 4 screws, and then remove the rear floor service hole cover.

(b) Disconnect the fuel pump connector.

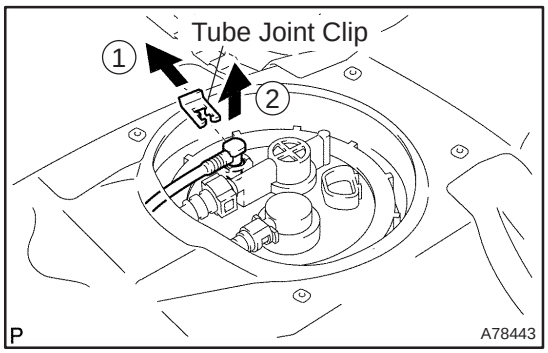

4. DISCONNECT FUEL TANK RETURN TUBE (1AZ–FSE ENGINE TYPE)

(a) Remove the tube joint clip, and pull out the fuel return tube.

NOTICE:

- **Check if there is any dirt or mud around the connector before this operation and remove the dirt as necessary.**
- **Be careful of mud because the fuel tube joint has an O–ring which seals the pipe and connector that can be contaminated.**
- **Do not use any tool in this operation.**
- **Do not bend or twist the nylon tube. Protect the connector by covering it with a vinyl or plastic bag.**
- **When the pipe and connector are stuck, push and pull the connector to release and pull the connector out carefully.**

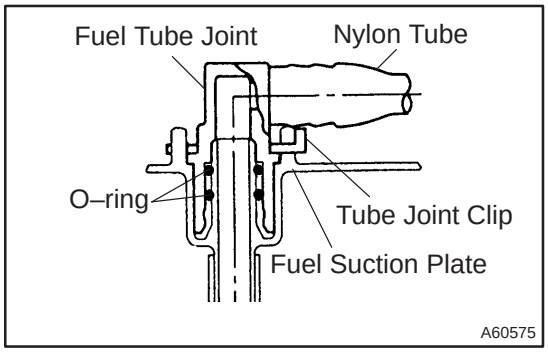

cardiagn.com

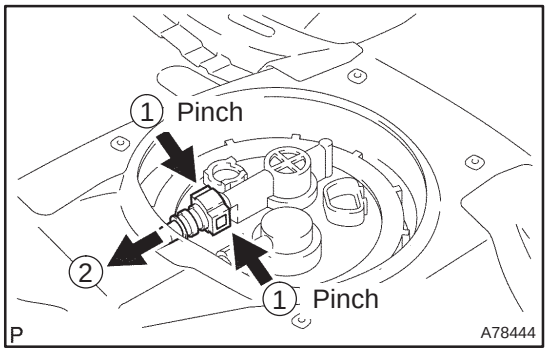

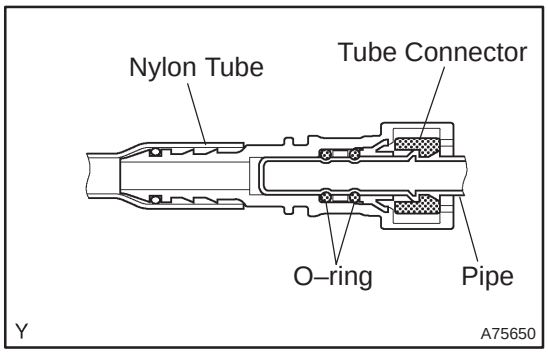

5. DISCONNECT FUEL TANK MAIN TUBE SUB–ASSY

(a) Pinch the tube connector and pull out the fuel tank main tube.

NOTICE:

- **Check if there is any dirt or mud around the connector before this operation and remove the dirt as necessary.**
- **Be careful of mud because the quick connector has an O–ring which seals the pipe and connector that can be contaminated.**
- **Do not use any tool in this operation.**
- **Do not bend or twist the nylon tube. Protect the connector by covering it with a vinyl or plastic bag.**
- **When the pipe and connector are stuck, push and pull the connector to release and pull the connector out carefully.**

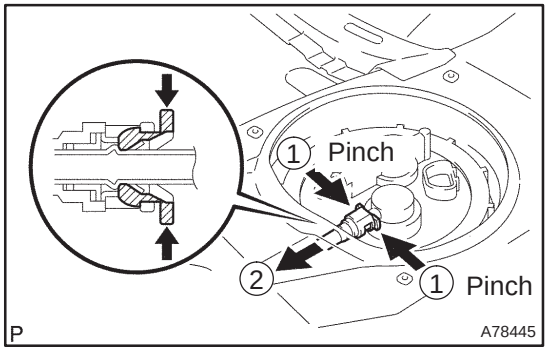

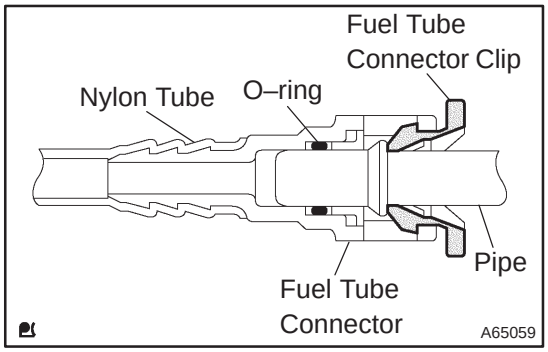

6. DISCONNECT FUEL EVAPORATION TUBE SUB–ASSY NO.2

(a) Pinch the fuel tube connector clip and pull out the fuel evaporation tube.

NOTICE:

- **Check if there is any dirt or mud around the connector before this operation and remove the dirt as necessary.**
- **Be careful of mud because the quick connector has an O–ring which seals the pipe and connector that can be contaminated.**
- **Do not use any tool in this operation.**
- **Do not bend or twist the nylon tube. Protect the connector by covering it with a vinyl or plastic bag.**
- **When the pipe and connector are stuck, push and pull the connector to release and pull the connector out carefully.**

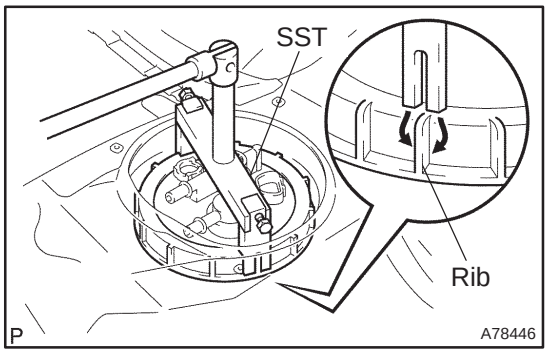

7. REMOVE FUEL SUCTION W/PUMP & GAGE TUBE ASSY

(a) Using SST, loosen the fuel pump gauge retainer.
SST 09808–14010

NOTICE:

Do not use other tools in this operation. Damage to the fuel pump gauge retainer and the fuel tank may result.

HINT:

A rib on the fuel pump gauge retainer can be fitted into a tip of the SST.

cardiagn.com

(b) Remove the fuel pump gauge retainer.

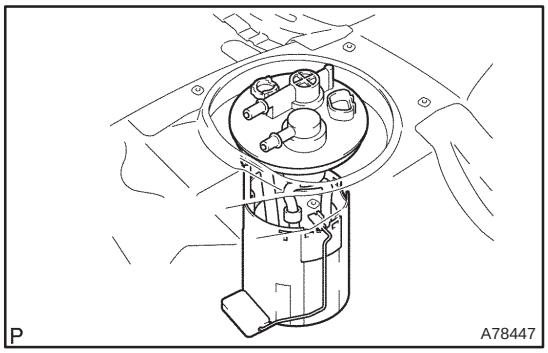

(c) Remove the fuel suction w/ pump & gage tube.

NOTICE:

Be careful that the arm of the fuel sender gage should not be bent.

(d) Remove the gasket from the tank.

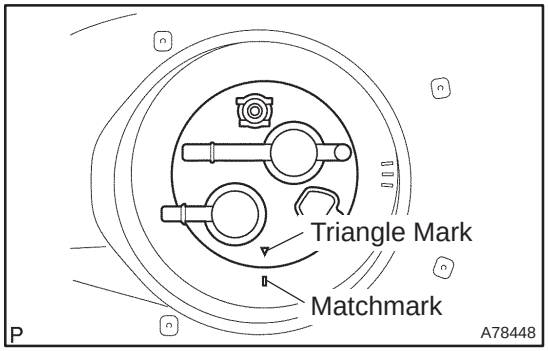

8. INSTALL FUEL SUCTION W/PUMP & GAGE TUBE ASSY

(a) Install a new gasket to the fuel tank.

(b) Install the fuel suction w/ pump & gage tube.

NOTICE:

Be careful that the arm of the fuel sender gage should not be bent.

(c) Align the triangle mark of the fuel suction w/ pump & gage tube with the matchmark location the fuel tank.

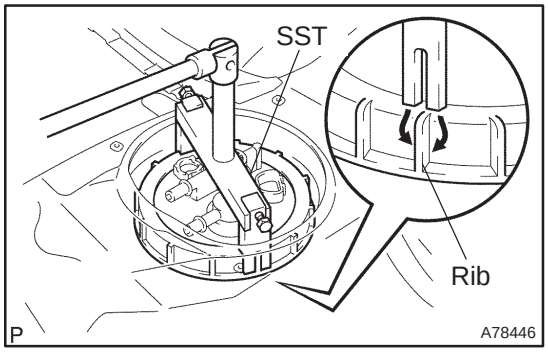

(d) Temporarily install the fuel pump gauge retainer.

(e) Using SST, tighten the fuel pump gauge retainer until the arrow mark is aligned with the center mark on the fuel tank.

SST 09808–14010

NOTICE:

Do not use other tools in this operation. Damage to the fuel pump gauge retainer and the fuel tank may result.

HINT:

A rib on the fuel pump gauge retainer can be fitted into a tip of the SST.

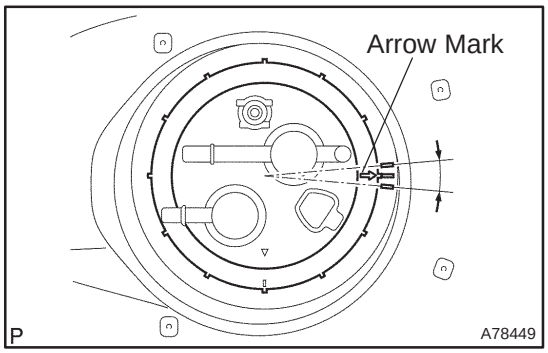

(f) Check that the arrow mark and center mark are aligned as shown in the illustration.

cardiagn.com

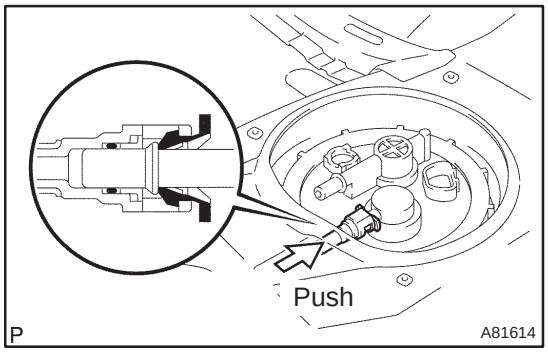

9. CONNECT FUEL EVAPORATION TUBE SUB–ASSY NO.2

(a) Push in the fuel tube connector to the pipe until it makes ”click” sound.

NOTICE:

- **Check if there is any damage or foreign objects on the connected part.**
- **After connecting, check if the fuel tube connector and the pipe are securely connected by pulling on them.**

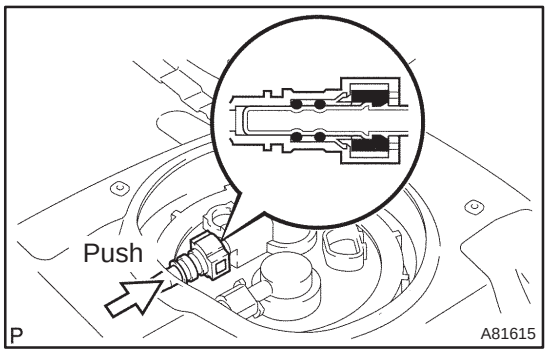

10. CONNECT FUEL TANK MAIN TUBE SUB–ASSY

(a) Push in the fuel tube connector to the pipe until it makes ”click” sound.

NOTICE:

- **Check if there is any damage or foreign objects on the connected part.**
- **After connecting, check if the fuel tube connector and the pipe are securely connected by pulling on them.**

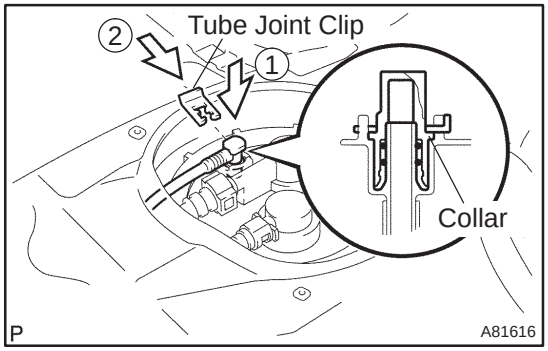

11. CONNECT FUEL TANK RETURN TUBE (1AZ–FSE ENGINE TYPE)

(a) Install in the fuel return tube with the tube joint clip.

NOTICE:

- **Check that there is no scratch or foreign objects on the connecting part.**
- **Check that the fuel tube joint is inserted securely.**
- **Check that the tube joint clip is on the collar of the fuel tube joint.**
- **After installing the tube joint clip, check that the fuel tube joint has not been pulled off.**

12. CHECK FOR FUEL LEAKS

HINT:

- 1ZZ–FE/3ZZ–FE: 11–5
- 1AZ–FE: 11–19
- 1AZ–FSE: 11–33

13. INSTALL REAR FLOOR SERVICE HOLE COVER

14. INSTALL REAR SEAT CUSHION ASSY (SEAT FIXED TYPE) (See page 72–32)

cardiagn.com

110UY–01

INSPECTION

1. INSPECT FUEL INJECTOR ASSY

(a) Inspect injector resistance

(1) Using an ohmmeter, measure the resistance between the terminals.

Resistance: 13.4 to 14.2 Ω at 20°C (68°F)

If the resistance is not as specified, replace the injector.

(b) Inspect injector inspection

CAUTION:

This test involves high–pressure fuel and electricity. Take every precaution regarding safe handling of both the fuel and the electricity. Preform this test in a safe area, and avoid any sparks or flame. Do not smoke.

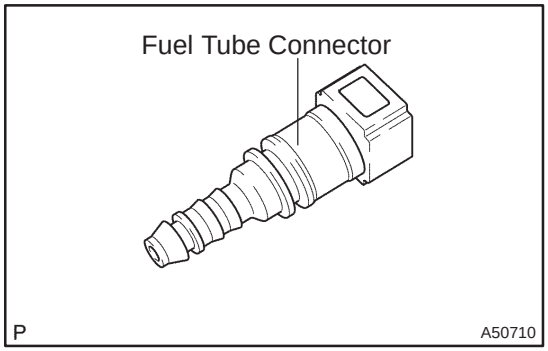

(1) Obtain new No. 1 fuel pipe (part No. 23901–0H040) and remove the fuel tube connector from the pipe.

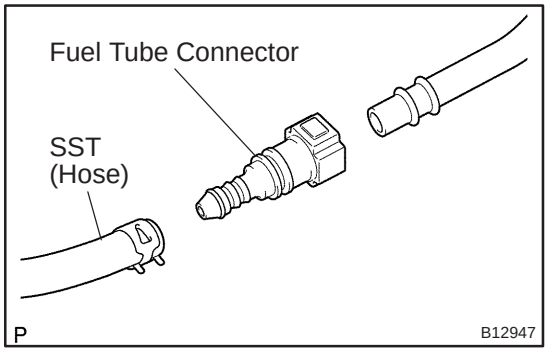

(2) Install the fuel tube connector to SST (hose), then connect the tube connector and the fuel pipe.

SST 09268–41047 (95336–08070)

CAUTION:

Connect the fuel tube connector (quick type) after observing the precautions to prevent fuel from spraying.

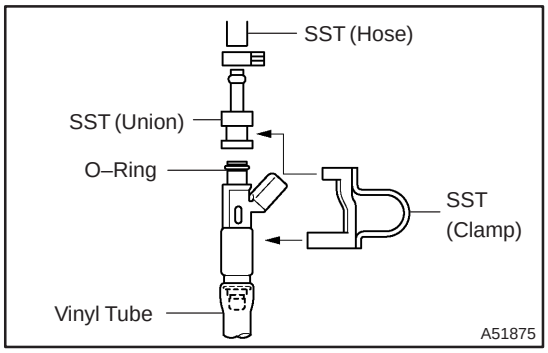

(3) Install the O–ring to the injector.

(4) Connect SST (union and hose) to the injector, and hold the injector and the union with SST (clamp)

SST 09268–41047 (09268–41110, 09268–41300, 95336–08070)

(5) Put the injector into a graduated cylinder.

CAUTION:

Install a suitable vinyl tube onto the injector to contain gasoline spray.

(6) Operate the fuel pump.(See Page 11–19)

cardiagn.com

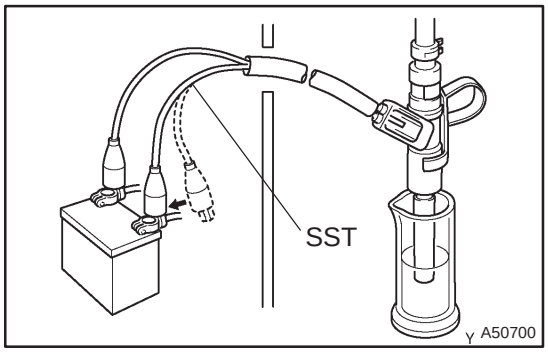

(7) Connect SST (wire) to the injector and the battery for 15 seconds, and measure the injection volume with a graduated cylinder. Test each injector 2 or 3 times.

SST 09842–30080

Injection volume:

Injection volume	Difference between each injector
60 to 73 cm^3 (3.6 to 4.5 cu in.) in 15 seconds	13 cm^3 (0.9 cu in.) or less

NOTICE:

Always do the switching at the battery side.

If the injection volume is not as specified, replace the injector.

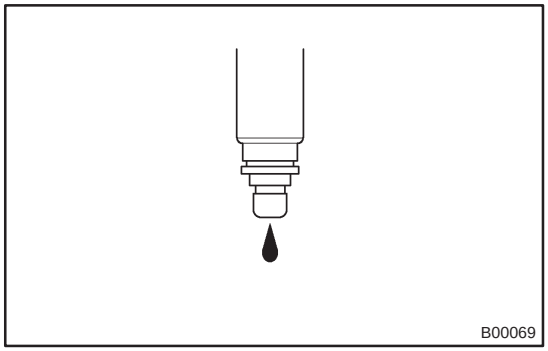

(c) Inspect leakage

(1) In the condition above, disconnect the test probes of SST (wire) from the battery and check the fuel leakage from the injector.

Fuel drop: 1 drop or less in 12 minutes

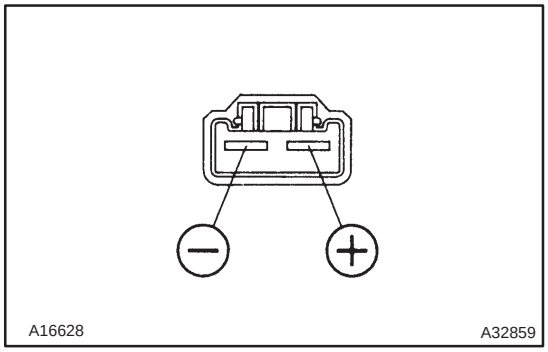

2. INSPECT FUEL PUMP

(a) Insect fuel pump resistance.

(1) Using an ohmmeter, measure the resistance between the terminals.

Resistance: 0.2 to 3.0 Ω at 20°C (68°F)

(b) Inspect fuel pump operation

(1) Apply battery voltage to both the terminals. Check that the pump operates.

NOTICE:

- **These tests must be done quickly (within 10 seconds) to prevent damage to the pump.**
- **Keep fuel pump as far away from the battery as possible.**
- **Always do the switching at the battery side.**

cardiagn.com

ON–VEHICLE INSPECTION

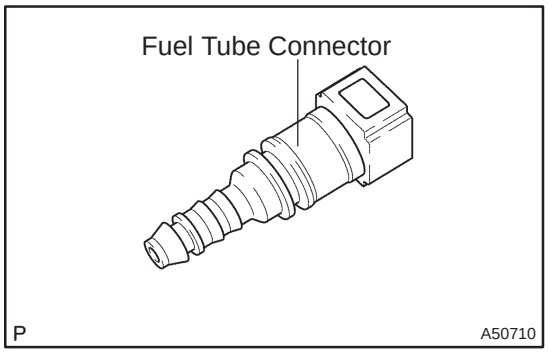

1. CHECK FUEL PRESSURE

(a) Discharge the pressure in the fuel system and take precautions for possible fuel spillage.(See page 11–15)

(b) Check that the battery voltage is above 12 V.

(c) Disconnect the negative (–) battery cable.

(d) Pull out the connecter from a new fuel tube.

HINT:

Part No. 23901–0H040

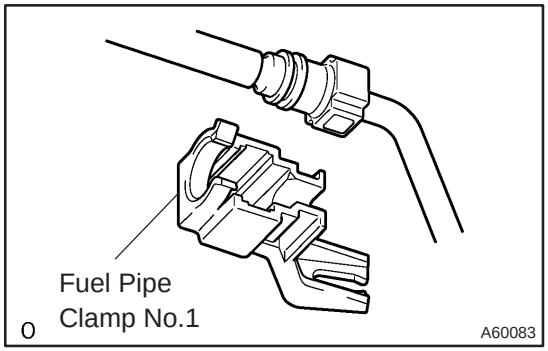

(e) Remove the fuel pipe clamp No.1 from the fuel tube connector.

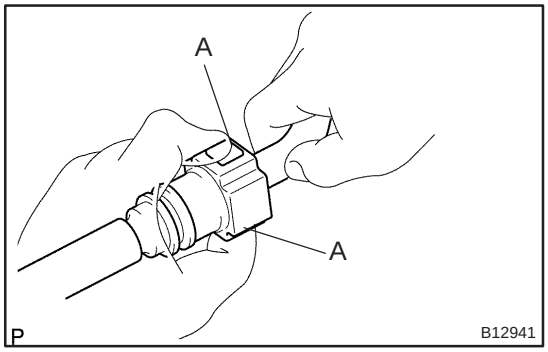

(f) Disconnect the fuel tube connector from the fuel pipe while pinching part A with fingers as shown in the illustration.

CAUTION:

- **Do not disconnect the fuel tube connector (quick type) until after you have discharged the fuel system pressure and taken appropriate steps to prevent fuel spillage.**
- **There may be remained pressure in the fuel lines after discharging the pressure.**
  Take precautions to prevent fuel from spraying on you or your clothing or inside the engine compartment.

cardiagn.com

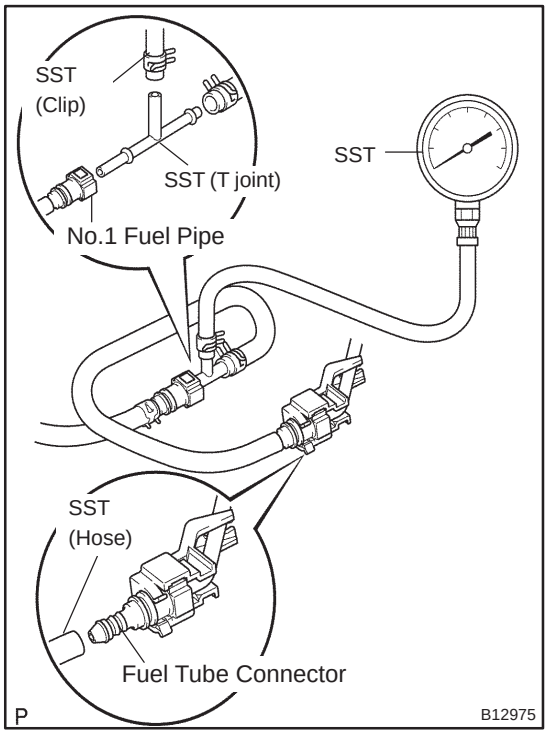

(g) Install SST (pressure gauge) and a fuel tube connector using SST as shown in the illustration.
SST 09268–41047(95336–08070),09268–45014 (09268–41250, 09268–41200, 09268–41220)

(h) Wipe up any gasoline.

(i) Reconnect the negative (–) battery cable.

(j) Connect the hand–hand tester to the DLC3.

(k) Measure the fuel pressure.
Fuel pressure:
304 to 343 kPa (3.1 to 3.5 kgf/cm^2, 44 to 50 psi)

If pressure is high, replace the fuel pressure regulator.
If pressure is low, check the fuel hoses connections, the fuel pump, the fuel filter and the fuel pressure regulator.

(l) Disconnect the hand–held tester from the DLC3.

(m) Start the engine.

(n) Measure the fuel pressure at idle.
Fuel pressure:
304 to 343 kPa (3.1 to 3.5 kgf/cm^2, 44 to 50 psi)

(o) Stop the engine.

(p) Check that the fuel pressure remains as specified for 5 minutes after the engine has stopped.
Fuel pressure:147 kPa (1.5 kgf/cm^2, 21 psi) or more

If pressure is not as specified, check the fuel pump, the pressure regulator and/or the injectors.

(q) After checking the fuel pressure, disconnect the negative (–) battery cable and carefully remove SST and the fuel tube connector to prevent gasoline from splashing.

(r) Reconnect the No. 1 fuel pipe (fuel tube connector).

CAUTION:
After taking the precautions, connect the fuel tube connecter (quick type).

2. CHECK FUEL PUMP OPERATION AND FUEL LEAK

(a) When using the hand–held tester
(1) Connect the hand–held tester to the DLC3.
(2) Turn the ignition switch ON and the hand–held tester main switch ON.

NOTICE:
Do not start the engine.

(3) Select the active test mode on the hand–held tester.
(4) Perform the active test. Check that the fuel pump operates and check for fuel leaks.

cardiagn.com

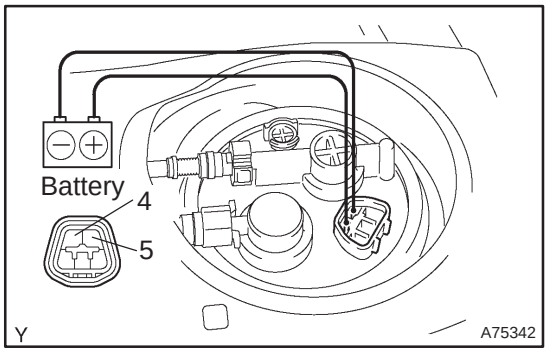

(b) When not using hand–held tester

(1) Connect the positive (+) lead form the battery to terminal 4 of the connector and connect the negative (–) lead to terminal 5.

(2) Check that the pump operates.

cardiagn.com

FUEL SYSTEM (1AZ–FE)

110UW–01

PRECAUTION

1. PRECAUTION

(a) Before working on fuel system, disconnect negative (–) battery cable.

(b) Do not smoke or work near fire when handling the fuel system.

(c) Keep gasoline away from rubber or leather parts.

2. DISCHARGE FUEL SYSTEM PRESSURE

CAUTION:

- **Do not disconnect any part of the fuel system until you have discharged the fuel system pressure.**
- **Even after discharging the fuel pressure, place a shop rag over fittings as you separate them to reduce risk of fuel spray on yourself or in the engine compartment.**

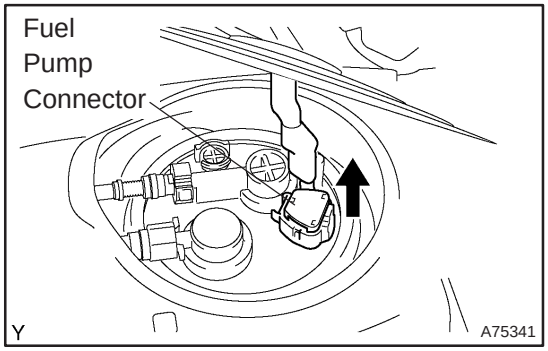

(a) Disconnect the fuel pump connector.

(b) Start the engine. After the engine has stopped, turn the ignition switch OFF.

(c) Disconnect the negative (–) battery cable.

(d) Connect the fuel pump connector.

3. FUEL SYSTEM

(a) When disconnecting the high fuel pressure line, a large amount of gasoline will spill out, so observe these procedures.

(1) Discharge the pressure in the fuel system. (See step 2)

(2) Disconnect the fuel pump tube. (See page 11–93)

(3) Drain the fuel that remained inside the fuel pump tube.

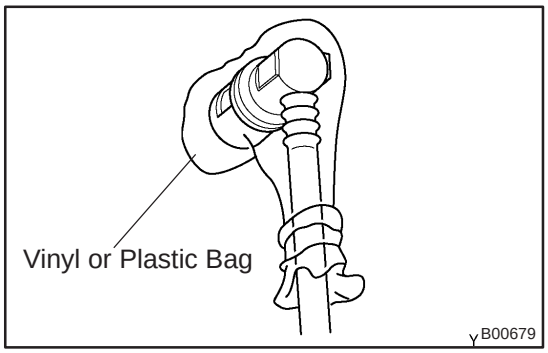

(4) Cover the disconnected fuel pump tubes with a vinyl or a plastic bag to prevent damage and dirt.

(5) Place a tray under the vehicle or point of disconnection to catch any fuel that may spill.

cardiagn.com

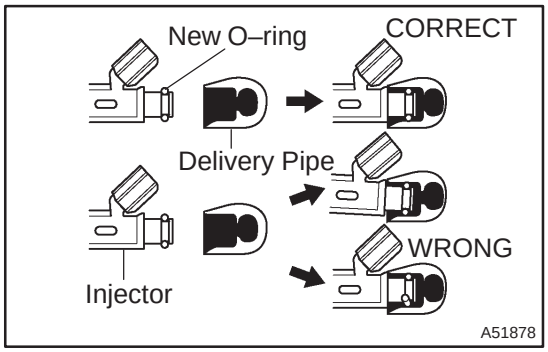

(b) Observe the following precautions when removing and installing fuel injectors.

NOTICE:

Never reuse the O–ring.

(1) When installing a new O–ring to the injector, be careful not to damage the injector.

(2) Coat the new O–ring with grease or gasoline before installing. Never use engine oil, gear oil or brake oil.

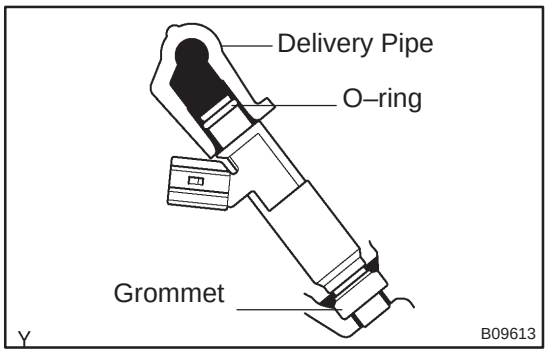

(c) Install the injector to the delivery pipe and cylinder head as shown in the illustration. Before installing the injector, be sure to apply grease or gasoline on the place where the delivery pipe contacts the O–ring of the injector.

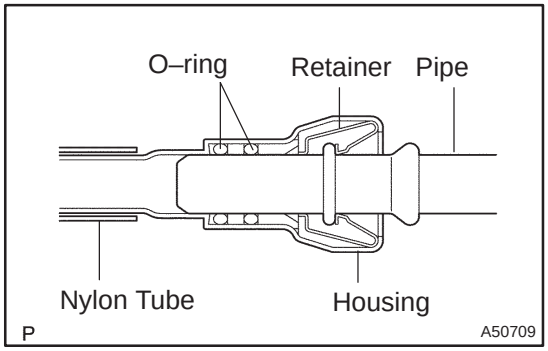

(d) Observe these precautions when disconnecting the fuel delivery pipe.

HINT:

The structure of the metallic connector is as shown in the illustration on the left.

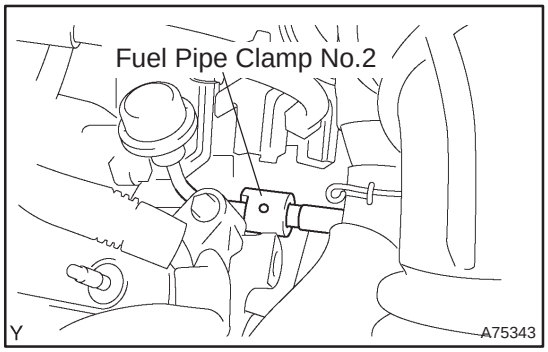

(1) Remove the fuel pipe clamp No.2.

(2) Find the metallic connector of the fuel tube assembly, slide it towards the vehicle rear and hold it as it is.

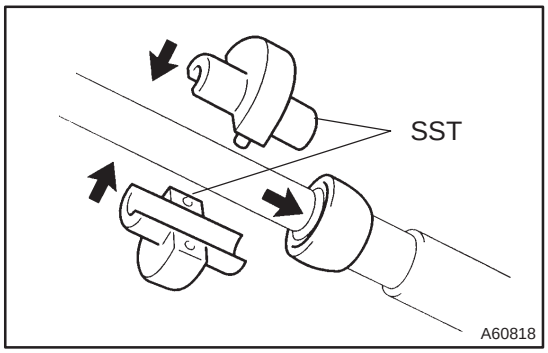

(3) Assemble SST to the connection of the fuel pipe as shown the illustration.

SST 09268–21010

cardiagn.com

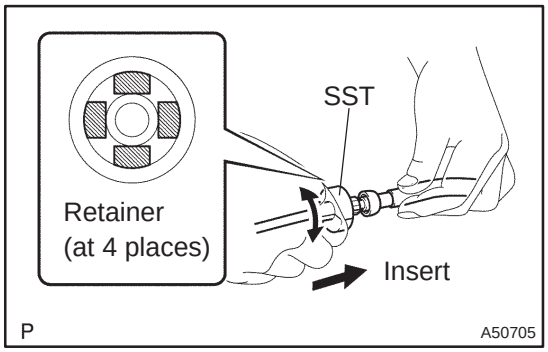

(4) Turn SST, align the retainers inside the connector with SST chamfered parts and insert SST into the connector.

(5) Slide SST and the connector together towards the fuel tube assembly.

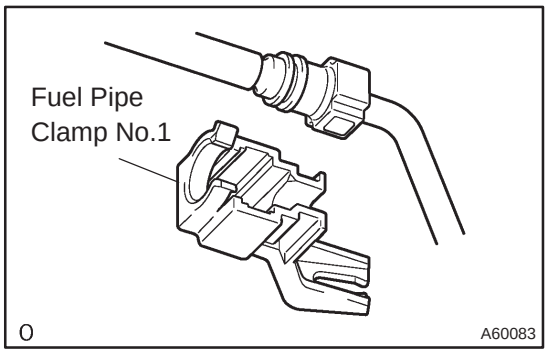

(e) Observe these following precautions when disconnecting the fuel tube connector (quick type).

(1) Remove the fuel pipe clamp No.1.

(2) Check that there is no dirt or mud on the pipe and around the connector before disconnecting them. Clean them if necessary.

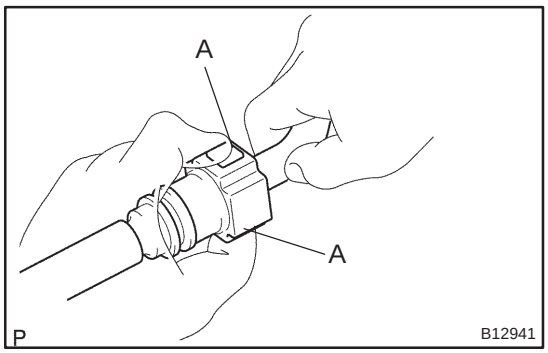

(3) Disconnect the connector from the hose while pinching part A with fingers as shown in the illustration.

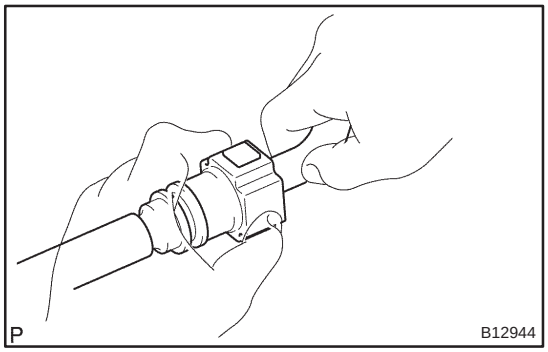

(4) When the connector and the pipe are stuck, push and pull the connector to release and pull the connector out from the pipe carefully.

(5) Inspect that there is no dirt or mud on the sealing surface of the disconnected pipe. Clean it away if necessary.

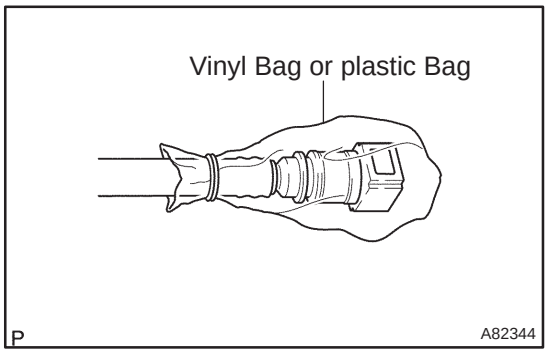

(6) To prevent the disconnected pipe and connector from being damaged and foreign objects from being introduced, cover them with a vinyl or plastic bag.

cardiagn.com

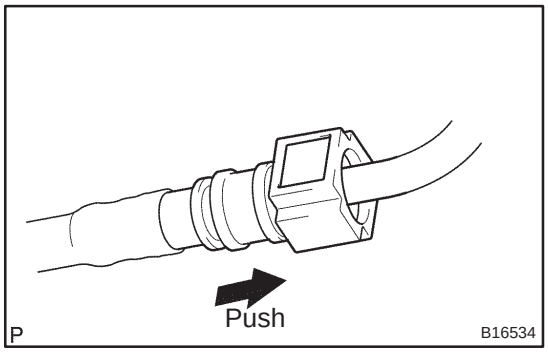

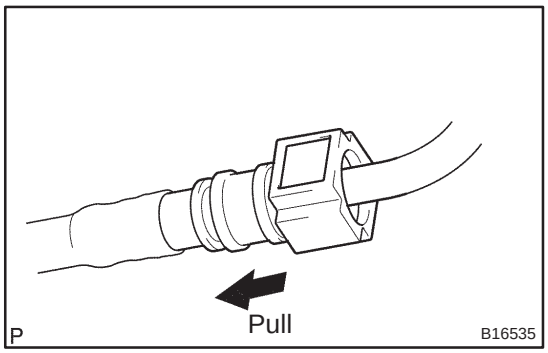

(f) Observe these precautions when connecting the fuel tube connectors (Quick Type):
  (1) Check that there is no damage or foreign objects in the connected part of the pipe.
  (2) Match the axis of the connector with the axis of the pipe, and push into the connector until the connector makes a ”click” sound. If the connection is tight, apply little amount of fresh engine oil on the tip of the pipe.
  (3) After having finished the connection, check if the pipe and the connector are securely connected by pulling on them.
  (4) Check for fuel leaks.

4. CHECK FOR FUEL LEAKS

(a) Check that there are no fuel leaks after doing maintenance anywhere on the fuel system. (See page 11–19)

cardiagn.com

FUEL SYSTEM (1CD–FTV)

INSPECTION

110CX–02

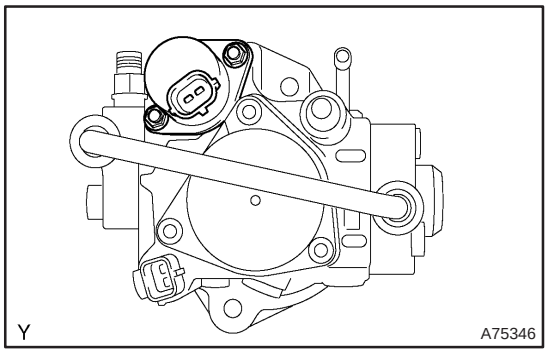

1. INJECTION OR SUPPLY PUMP ASSY

(a) Resistance inspection.

(1) Using an ohmmeter, measure the resistance between the terminals.

Resistance: 1.5 to 2.3 Ω at 20°C (68°F)

2. INJECTOR ASSY

(a) Resistance inspection.

(1) Using an ohmmeter, measure the resistance between the terminals.

Resistance: 0.85 to 1.05 Ω at 20°C (68°F)

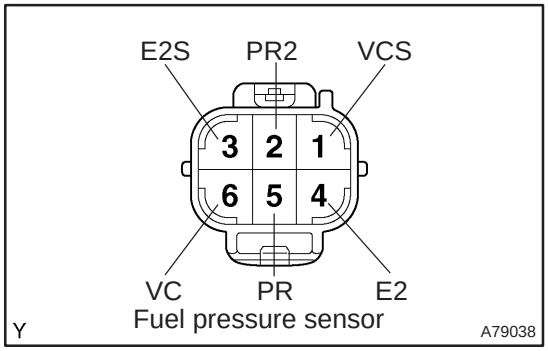

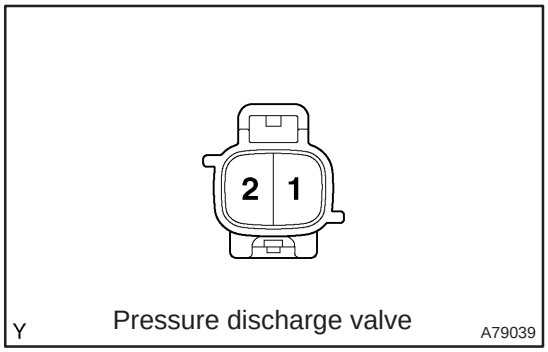

3. COMMON RAIL ASSY

(a) Resistance inspection. (Fuel pressure sensor)

(1) Using an ohmmeter, measure the resistance between terminals 5 (PR) and 4 (E2).

Resistance: 16.4 kΩ or less

(2) Using an ohmmeter, measure the resistance between terminals 2 (PR2) and 3 (E2S).

Resistance: 16.4 kΩ or less

(3) Using an ohmmeter, measure the resistance between terminals 6 (VC) and 5 (PR).

Resistance: 3 kΩ or less

(4) Using an ohmmeter, measure the resistance between terminals 1 (VCS) and 2 (PR2).

Resistance: 3 kΩ or less

(b) Resistance inspection. (Pressure discharge valve)

(1) Using an ohmmeter, measure the resistance between terminals.

Resistance: 0.85 to 1.05 Ω at 20°C (68°F)

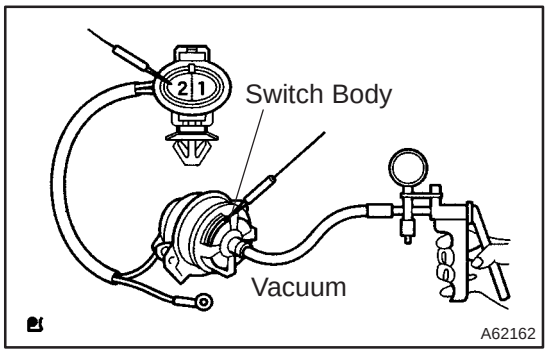

4. FUEL HEATER ASSY

(a) Resistance inspection.

(1) Apply a vacuum of 34.7 ± 5.3 kPa (260 ± 40 mmHg, 10.24 ± 1.57 in Hg) to the vacuum switch port.

(2) Using an ohmmeter, measure the resistance between terminal 2 and switch body.

Resistance: 0.5 to 20 Ω at 20°C (68°F)

cardiagn.com

5. LEVEL WARNING SWITCH

(a) Continuity inspection.

(1) Using an ohmmeter, check that there is continuity between terminals.

Specified condition:

There is continuity when raising a float.

There is no continuity when letting a float down.

6. FUEL TEMPERATURE SENSOR

(a) Resistance inspection.

(1) Using an ohmmeter, measure the resistance between the terminals.

Resistance:

Approx. 20°C (68°F) 2.21 to 2.69 Ω

Approx. 80°C (176°F) 0.287 to 0.349 Ω

cardiagn.com

110UV–01

INSPECTION

1. FUEL INJECTOR ASSY

(a) Inspect injector resistance

(1) Using an ohmmeter, measure the resistance between the terminals.

Resistance:

Engine	Rersistance	Condition
1ZZ–FE	13.4 to 14.2 Ω	20 °C (68 °F)
3ZZ–FE	13.8 to 15.2 Ω	20 °C (68 °F)

If the resistance is not as specified, replace the injector.

(b) Inspect injector inspection

CAUTION:

This test involves high–pressure fuel and electricity. Take every precaution regarding safe handling of both the fuel and the electricity. Preform this test in a safe area, and avoid any sparks or flame. Do not smoke.

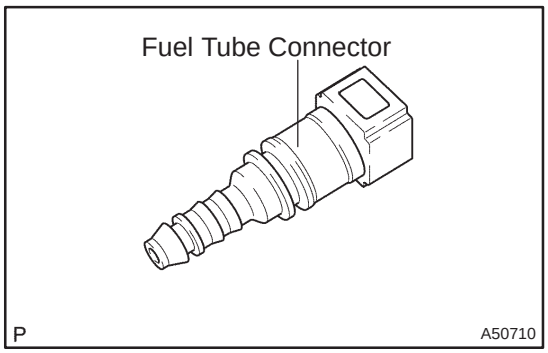

(1) Obtain new No. 1 fuel pipe (part No. 23901–0D030) and remove the fuel tube connector from the pipe.

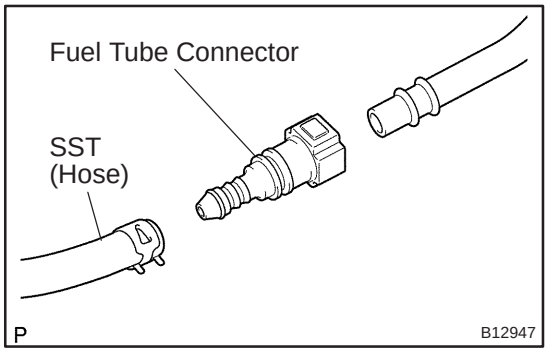

(2) Install the fuel tube connector to SST (hose), then connect the tube connector and the fuel pipe.

SST 09268–41047 (95336–08070)

CAUTION:

Connect the fuel tube connector (quick type) after observing the precautions to prevent fuel from spraying.

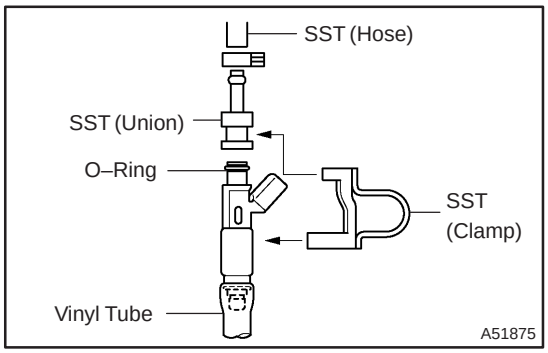

(3) Install the O–ring to the injector.

(4) Connect SSTs (union and hose) to the injector, and hold the injector and the union with SST (clamp)

SST 09268–41047 (95336–08070, 09268–41110, 09268–41300)

(5) Put the injector into a graduated cylinder.

CAUTION:

Install a suitable vinyl tube onto the injector to contain gasoline spray.

(6) Operate the fuel pump.(See Page 11–5)

cardiagn.com

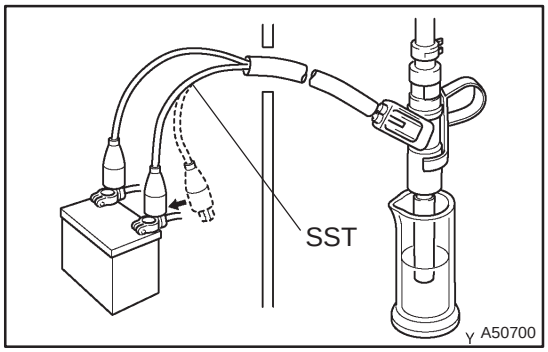

(7) Connect SST (wire) to the injector and the battery for 15 seconds, and measure the injection volume with a graduated cylinder. Test each injector 2 or 3 times.

SST 09842–30080

Injection volume:

Engine	Injection volume	Difference between each injector
1ZZ–FE	60 to 73 cm^3 (3.7 to 4.5 cu in.) in 15 seconds	13 cm^3 (0.8 cu in.) or less
3ZZ–FE	45 to 55 cm^3 (2.7 to 3.3 cu in.) in 15 seconds	10 cm^3 (0.6 cu in.) or less

NOTICE:

Always do the switching at the battery side.

If the injection volume is not as specified, replace the injector.

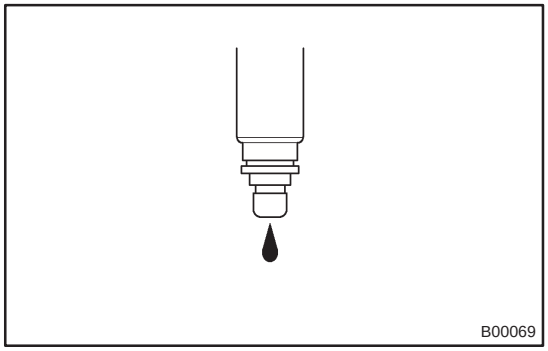

(c) Inspect leakage

(1) In the condition above, disconnect the test probes of SST (wire) from the battery and check the fuel leakage from the injector.

Fuel drop:

1ZZ–FE	1 drop or less in 12 minutes
3ZZ–FE	1 drop or less in 5 minutes

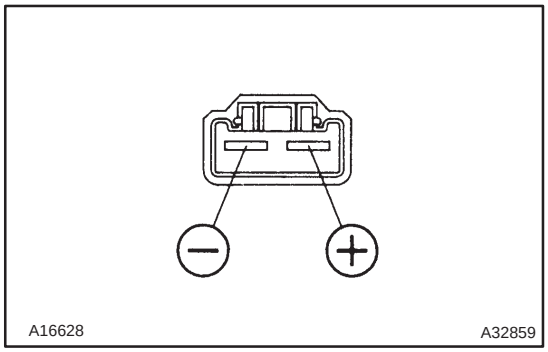

2. INSPECT FUEL PUMP

(a) Insect fuel pump resistance.

(1) Using an ohmmeter, measure the resistance between the terminals.

Resistance: 0.2 to 3.0 Ω at 20°C (68°F)

(b) Inspect fuel pump operation

(1) Apply battery voltage to both the terminals. Check that the pump operates.

NOTICE:

- **These tests must be done quickly (within 10 seconds) to prevent damage to the pump.**
- **Keep fuel pump as far away from the battery as possible.**
- **Always do the switching at the battery side.**

cardiagn.com

110UU–01

ON–VEHICLE INSPECTION

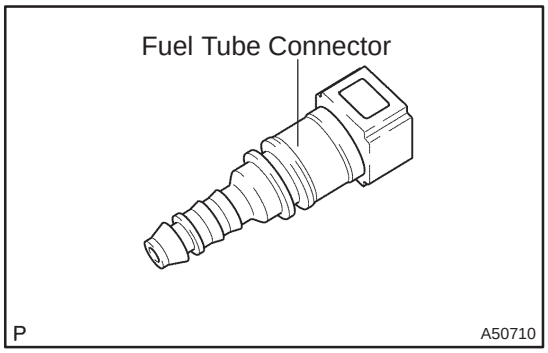

1. CHECK FUEL PRESSURE

(a) Discharge the pressure in the fuel system and take precautions for possible fuel spillage. (See page 11–1)

(b) Check that the battery voltage is above 12 V.

(c) Disconnect the negative (–) battery cable.

(d) Pull out the connecter from a new fuel tube.

HINT:

Part No. 23901–0D030

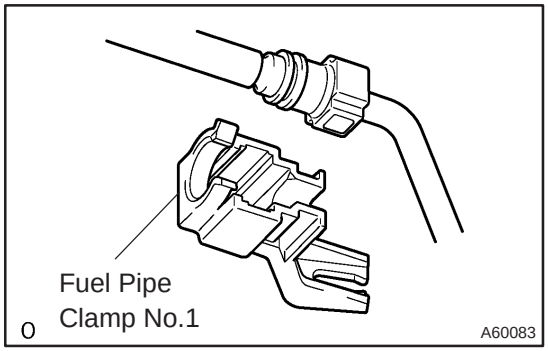

(e) Disconnect the fuel tube clamp from the fuel tube connector.

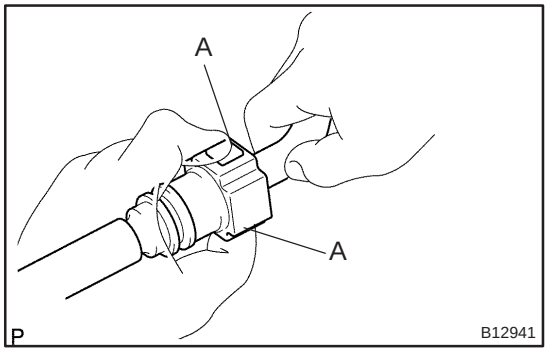

(f) Disconnect the fuel tube connector from the fuel pipe while pinching part A with fingers as shown in the illustration.

CAUTION:

- **Do not disconnect the fuel tube connector (quick type) until after you have discharged the fuel system pressure and taken appropriate steps to prevent fuel spillage.**
- **There may be remained pressure in the fuel lines after discharging the pressure.**
  Take precautions to prevent fuel from spraying on you or your clothing or inside the engine compartment.

cardiagn.com

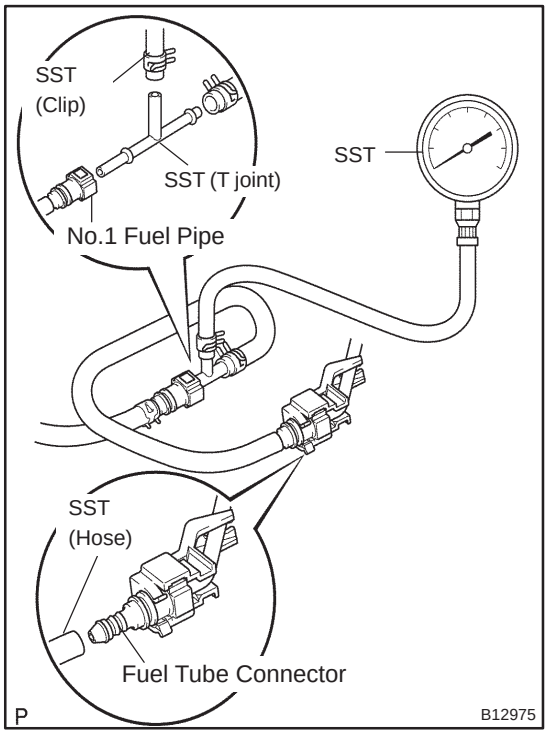

(g) Install SST (pressure gauge) and a fuel tube connector using SST as shown in the illustration.
SST 09268–41047(95336–08070),09268–45014 (09268–41250, 09268–41200, 09268–41220)

(h) Wipe up any gasoline.

(i) Reconnect the negative (–) battery cable.

(j) Connect the hand–hand tester to the DLC3.

(k) Measure the fuel pressure.
Fuel pressure:
304 to 343 kPa (3.1 to 3.5 kgf/cm^2, 44 to 50 psi)

If pressure is high, replace the fuel pressure regulator.
If pressure is low, check the fuel hoses connections, the fuel pump, the fuel filter and the fuel pressure regulator.

(l) Disconnect the hand–held tester from the DLC3.

(m) Start the engine.

(n) Measure the fuel pressure at idle.
Fuel pressure:
304 to 343 kPa (3.1 to 3.5 kgf/cm^2, 44 to 50 psi)

(o) Stop the engine.

(p) Check that the fuel pressure remains as specified for 5 minutes after the engine has stopped.
Fuel pressure:147 kPa (1.5 kgf/cm^2, 21 psi) or more

If pressure is not as specified, check the fuel pump, the pressure regulator and/or the injectors.

(q) After checking the fuel pressure, disconnect the negative (–) battery cable and carefully remove SST and the fuel tube connector to prevent gasoline from splashing.

(r) Reconnect the No. 1 fuel pipe (fuel tube connector).

CAUTION:
After taking the precautions, connect the fuel tube connecter (quick type).

2. CHECK FUEL PUMP OPERATION AND FUEL LEAK

(a) When using the hand–held tester
(1) Connect the hand–held tester to the DLC3.
(2) Turn the ignition switch ON and the hand–held tester main switch ON.

NOTICE:
Do not start the engine.

(3) Select the active test mode on the hand–held tester.
(4) Perform the active test. Check that the fuel pump operates and check for fuel leaks.

cardiagn.com

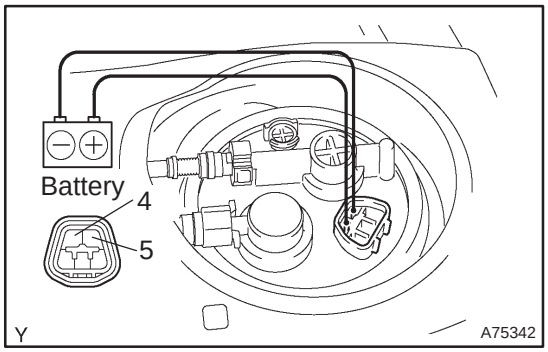

(b) When not using the hand–held tester

(1) Connect the positive (+) lead form the battery to terminal 4 of the connector and connect the negative (–) lead to terminal 5.

(2) Check that the pump operates.

cardiagn.com

FUEL SYSTEM (1ZZ–FE/3ZZ–FE)

110UT–01

PRECAUTION

1. PRECAUTION

(a) Before working on fuel system, disconnect negative (–) battery cable.
(b) Do not smoke or work near fire when handling the fuel system.
(c) Keep gasoline away from rubber or leather parts.

2. DISCHARGE FUEL SYSTEM PRESSURE

CAUTION:

- **Do not disconnect any part of the fuel system until you have discharged the fuel system pressure.**
- **Even after discharging the fuel pressure, place a shop rag over fittings as you separate them to reduce risk of fuel spray on yourself or in the engine compartment.**

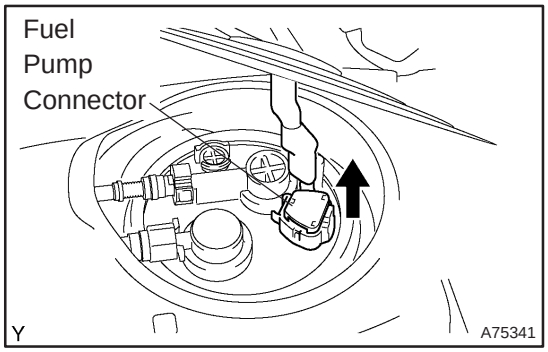

(a) Disconnect the fuel pump connector.
(b) Start the engine. After the engine has stopped, turn the ignition switch OFF.
(c) Disconnect the negative (–) battery cable.
(d) Connect the fuel pump connector.

3. FUEL SYSTEM

(a) When disconnecting the high fuel pressure line, a large amount of gasoline will spill out, so observe these procedures.
  (1) Discharge the pressure in the fuel system. (See step 2)
  (2) Disconnect the fuel pump tube. (See page 11–93)
  (3) Drain the fuel that remained inside the fuel pump tube.

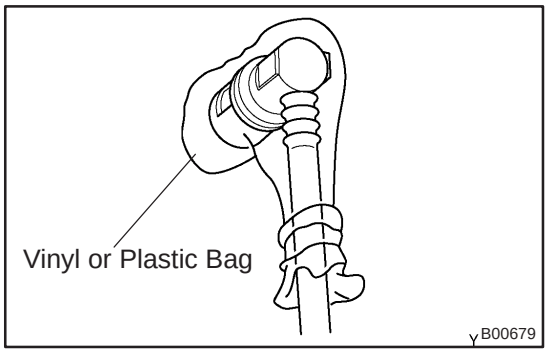

  (4) Cover the disconnected fuel pump tubes with a vinyl or a plastic bag to prevent damage and dirt.
  (5) Place a tray under the vehicle or point of disconnection to catch any fuel that may spill.

cardiagn.com

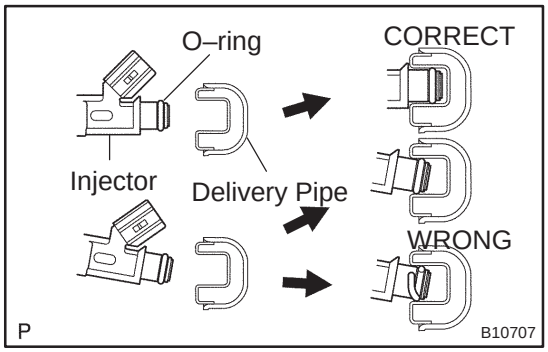

(b) Observe the following precautions when removing and installing fuel injectors.

NOTICE:

Never reuse the O–ring.

(1) When installing a new O–ring on the injector, be careful not to damage the injector.

(2) Coat the new O–ring with grease or gasoline before installing. Never use engine oil, gear oil or brake oil.

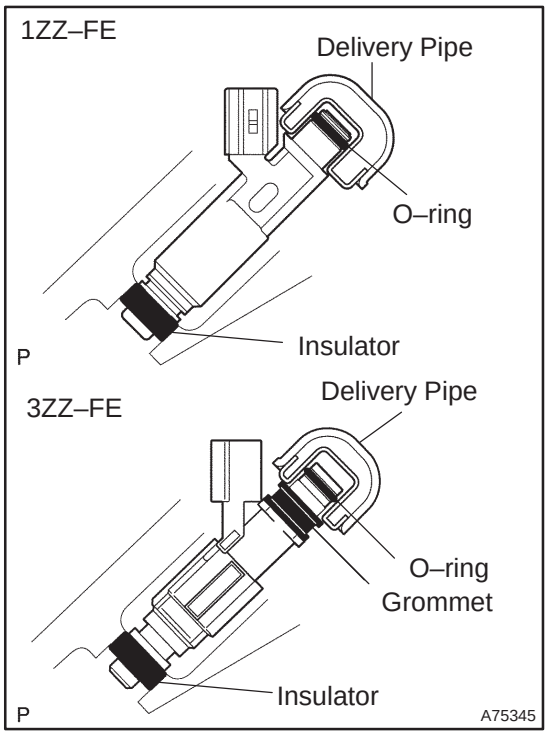

(c) Install the injector to the delivery pipe and cylinder head as shown in the illustration. Before installing the injector, be sure to apply grease or gasoline on the place where the delivery pipe contacts the O–ring of the injector.

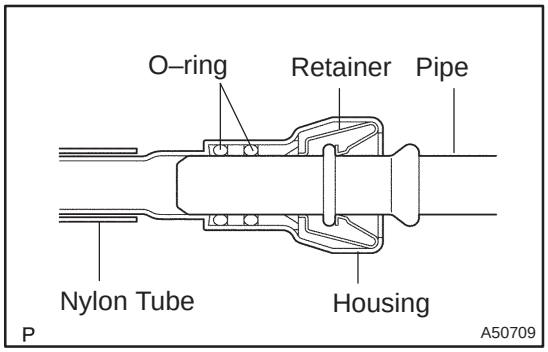

(d) Observe these precautions when disconnecting the fuel delivery pipe.

HINT:

The structure of the metallic connector is as shown in the illustration on the left.

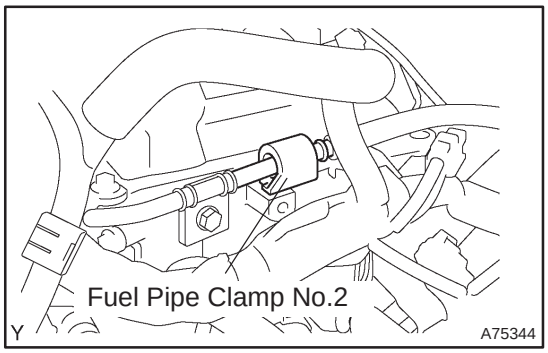

(1) Remove the fuel pipe clamp No.2.

(2) Find the metallic connector of the fuel tube assembly, slide it towards the vehicle rear and hold it as it is.

cardiagn.com

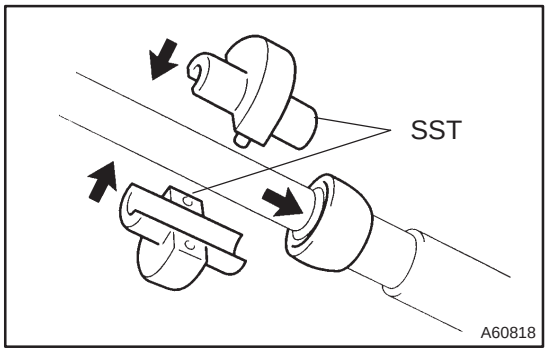

(3) Assemble SST to the connection of fuel pipe as shown in the illustration.

SST 09268–21010

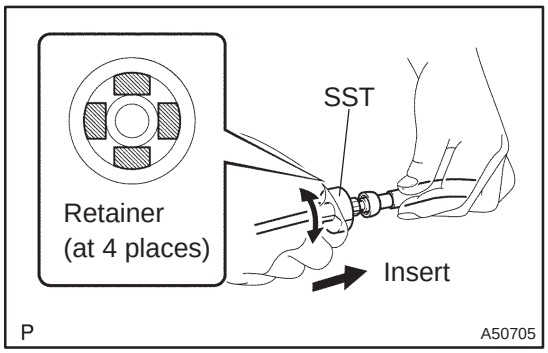

(4) Turn SST, align the retainers inside the connector with SST chamfered parts and insert SST into the connector.

(5) Slide SST and the connector together towards the fuel tube assembly.

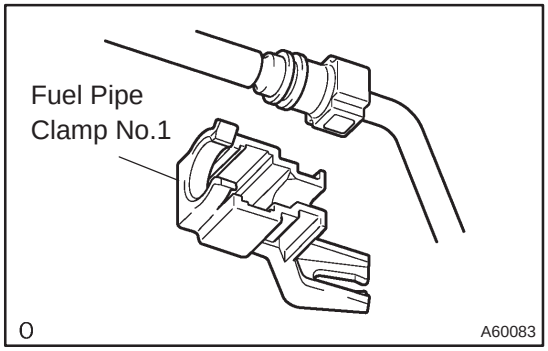

(e) Observe these following precautions when disconnecting the fuel tube connector (quick type).

(1) Remove the fuel pipe clamp No.1.

(2) Check that there is no dirt or mud on the pipe and around the connector before disconnecting them. Clean them if necessary.

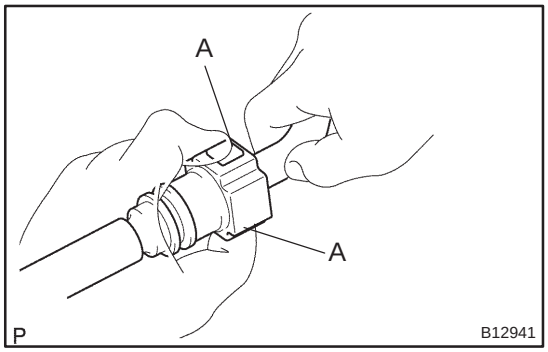

(3) Disconnect the connector from the hose while pinching part A with fingers as shown in the illustration.

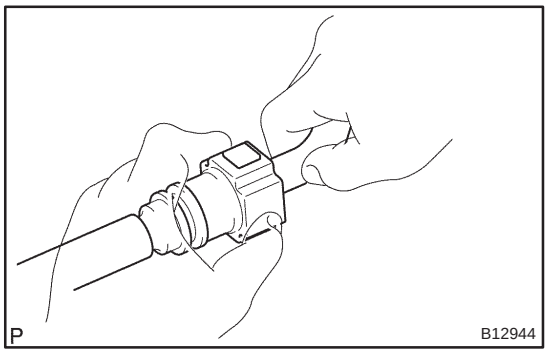

(4) When the connector and the pipe are stuck, push and pull the connector to release and pull the connector out from the pipe carefully.

(5) Inspect that there is no dirt or mud on the sealing surface of the disconnected pipe. Clean it away if necessary.

cardiagn.com

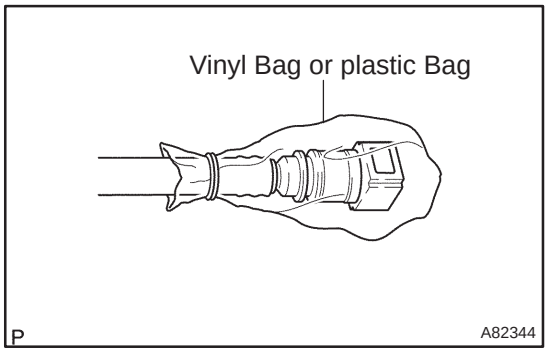

(6) To prevent the disconnected pipe and connector from being damaged and foreign objects from being introduced, cover them with a vinyl or plastic bag.

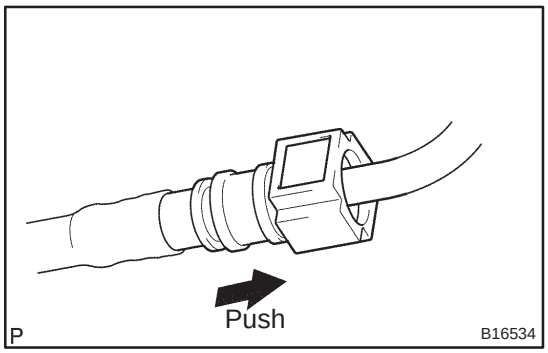

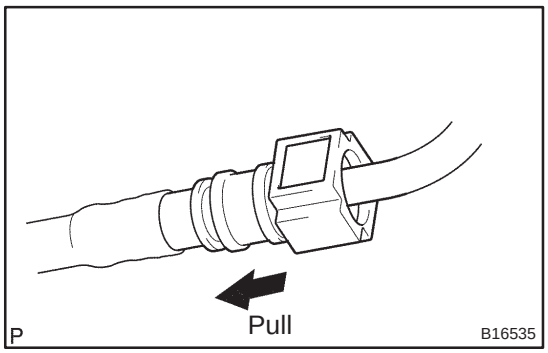

(f) Observe these precautions when connecting the fuel tube connectors (Quick Type):
- (1) Check that there is no damage or foreign objects in the connected part of the pipe.
- (2) Match the axis of the connector with the axis of the pipe, and push into the connector until the connector makes a ”click” sound. If the connection is tight, apply little amount of fresh engine oil on the tip of the pipe.
- (3) After having finished the connection, check if the pipe and the connector are securely connected by pulling on them.
- (4) Check for fuel leaks.

4. CHECK FOR FUEL LEAKS

(a) Check that there are no fuel leaks after doing maintenance anywhere on the fuel system. (See page 11–5)

cardiagn.com

110V1–01

INSPECTION

1. INSPECT FUEL INJECTOR ASSY

NOTICE:

This inspection aims at inspecting the fuel injectors for open or short, because the fuel injectors of this vehicle are high–pressure type and do not allow to inspect fuel injection volume.

(a) Inspect injector resistance

(1) Using an ohmmeter, measure the resistance between the terminals.

Resistance: 2.55 to 2.85 Ω at 20°C (68°F)

If the resistance is not as specified, replace the injector.

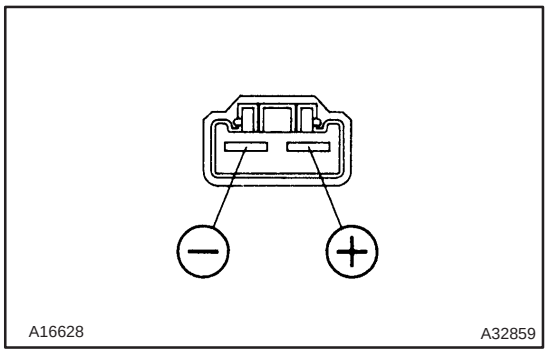

2. INSPECT FUEL PUMP

(a) Insect fuel pump resistance.

(1) Using an ohmmeter, measure the resistance between the terminals.

Resistance: 0.2 to 3.0 Ω at 20°C (68°F)

(b) Inspect fuel pump operation

(1) Apply battery voltage to both the terminals. Check that the pump operates.

NOTICE:

- **These tests must be done quickly (within 10 seconds) to prevent damage to the pump.**
- **Keep fuel pump as far away from the battery as possible.**
- **Always do the switching at the battery side.**

3. INSPECT FUEL PUMP (HIGH PRESSURE)

(a) Remove the engine cover.

(b) Disconnect the fuel pump connector.

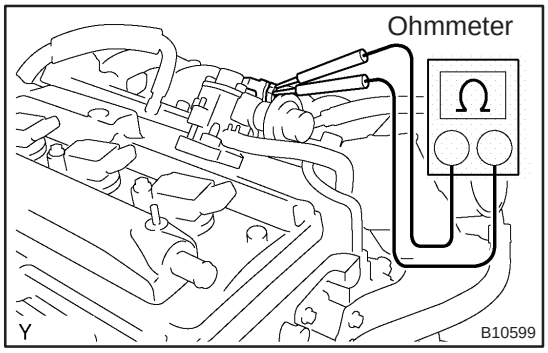

(c) Using an ohmmeter, measure the resistance between the terminals.

Resistance: 1.19 to 1.39 Ω at 20°C (68°F)

If the resistance is not as specified, replace the fuel pump.

(d) Reconnect the connector.

(e) Reinstall the engine cover.

cardiagn.com

110V0–01

ON–VEHICLE INSPECTION

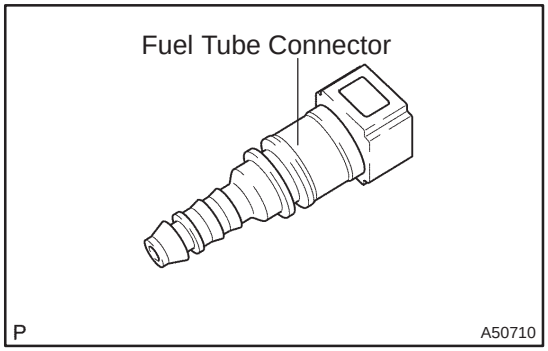

1. CHECK FUEL PRESSURE

(a) Discharge the pressure in the fuel system and take precautions for possible fuel spillage. (See page 11–30)

(b) Check that the battery voltage is above 12 V.

(c) Disconnect the negative (–) battery cable.

(d) Pull out the connecter from a new fuel tube.

HINT:

Part No. 23901–28160

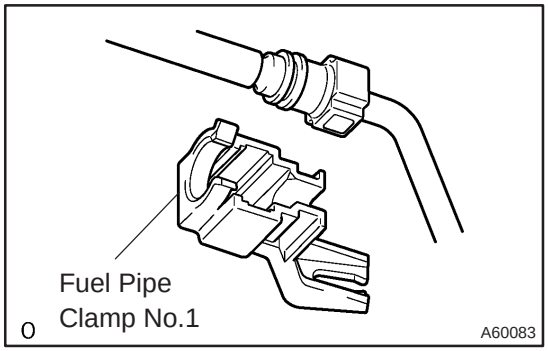

(e) Disconnect the fuel tube clamp from the fuel tube connector.

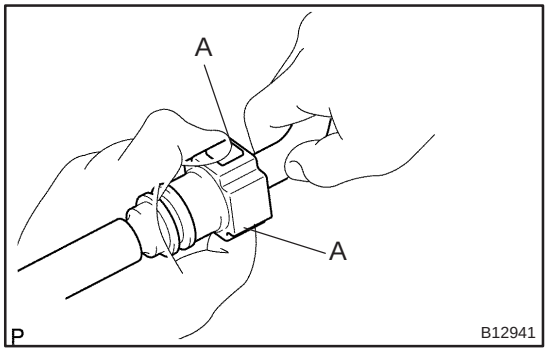

(f) Disconnect the fuel tube connector from the fuel pipe while pinching part A with fingers as shown in the illustration.

CAUTION:

- **Do not disconnect the fuel tube connector (quick type) until after you have discharged the fuel system pressure and taken appropriate steps to prevent fuel spillage.**
- **There may be remained pressure in the fuel lines after discharging the pressure.**
  Take precautions to prevent fuel from spraying on you or your clothing or inside the engine compartment.

cardiagn.com

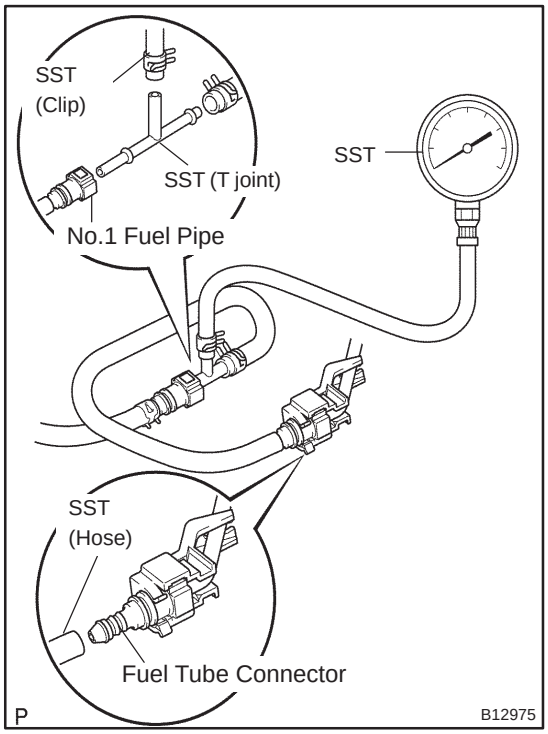

(g) Install SST (pressure gauge) and a fuel tube connector using SST as shown in the illustration.
SST 09268–41047(95336–08070),09268–45014 (09268–41250, 09268–41200, 09268–41220)

(h) Wipe up any gasoline.

(i) Reconnect the negative (–) battery cable.

(j) Connect the hand–hand tester to the DLC3.

(k) Measure the fuel pressure.
Fuel pressure:
196 to 588 kPa (2 to 6 kgf/cm^2, 28 to 85 psi)

If pressure is high, replace the fuel pressure regulator.
If pressure is low, check the fuel hoses connections, the fuel pump, the fuel filter and the fuel pressure regulator.

(l) Disconnect the hand–held tester from the DLC3.

(m) Start the engine.

(n) Measure the fuel pressure at idle.
Fuel pressure:
196 to 588 kPa (2 to 6 kgf/cm^2, 28 to 85 psi)

(o) Stop the engine.

(p) Check that the fuel pressure remains as specified for 5 minutes after the engine has stopped.
Fuel pressure:147 kPa (1.5 kgf/cm^2, 21 psi) or more

If pressure is not as specified, check the fuel pump, the pressure regulator and/or the injectors.

(q) After checking the fuel pressure, disconnect the negative (–) battery cable and carefully remove SST and the fuel tube connector to prevent gasoline from splashing.

(r) Reconnect the No. 1 fuel pipe (fuel tube connector).

CAUTION:
After taking the precautions, connect the fuel tube connecter (quick type).

2. CHECK FUEL PUMP OPERATION AND CHECK FOR FUEL LEAKS

(a) When using the hand–held tester
(1) Connect the hand–held tester to the DLC3.
(2) Turn the ignition switch ON and the hand–held tester main switch ON.

NOTICE:
Do not start the engine.

(3) Select the active test mode on the hand–held tester.
(4) Perform the active test. Check that the fuel pump operates and check for fuel leaks.

cardiagn.com

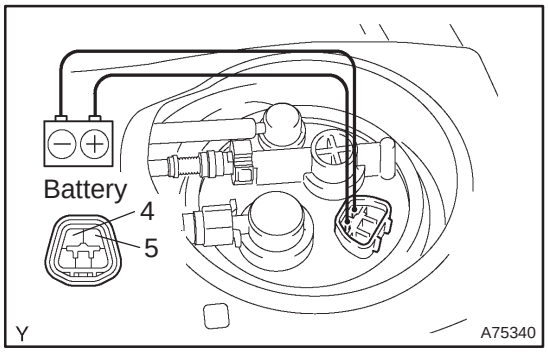

(b) When not using the hand–held tester
  (1) Connect the positive (+) lead form the battery to terminal 4 of the connector and connect the negative (–) lead to terminal 5.
  (2) Check that the pump operates.

3. CHECK FUEL PUMP OPERATION (HIGH PRESSURE)

(a) Remove the No. 1 engine cover.
(b) Start the engine.

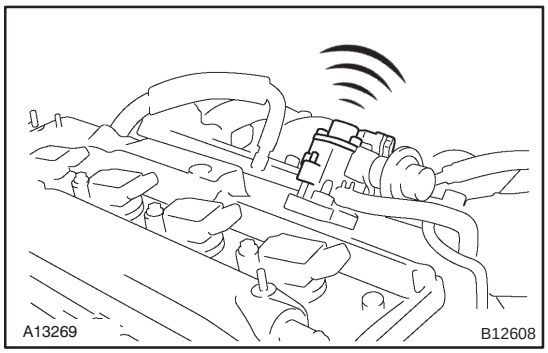

(c) Using a sound scope, hear the operating sound of the pump.

If there is no sound, replace the pump.

(d) Stop the engine.
(e) Reinstall the engine cover.

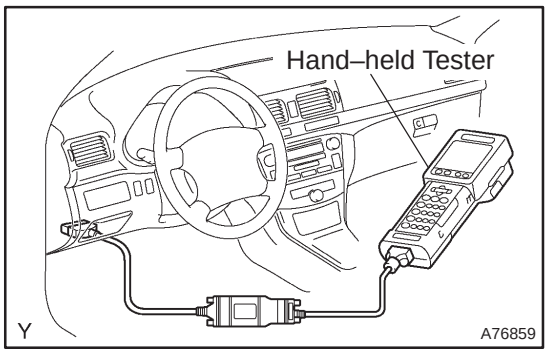

4. CHECK FUEL HIGH PRESSURE

(a) Connect the hand–held tester to the DLC3.
(b) Start the engine.
(c) Select the active test mode on the hand–held tester.
(d) Perform the active test check the fuel high pressure at idle to 3,000 rpm.
  Fuel high pressure:
  9.5 to 10.5 Mpa (97 to 107 kgf/cm^2, 1,380 to 1,520 psi)

If the pressure is not as specified, check the fuel pump, high pressure fuel pump, fuel pressure sensor, wiring and fuel leakage.

(e) Stop the engine.
(f) Disconnect the hand–held tester.

cardiagn.com

FUEL SYSTEM (1AZ–FSE)

110UZ–01

PRECAUTION

1. PRECAUTION

(a) Before working on fuel system, disconnect negative (–) battery cable.
(b) Do not smoke or work near fire when handling the fuel system.
(c) Keep gasoline away from rubber or leather parts.

2. DISCHARGE FUEL SYSTEM PRESSURE

CAUTION:

- **Do not disconnect any part of the fuel system until you have discharged the fuel system pressure.**
- **Even after discharging the fuel pressure, place a shop rag over fittings as you separate them to reduce risk of fuel spray on yourself or in the engine compartment.**

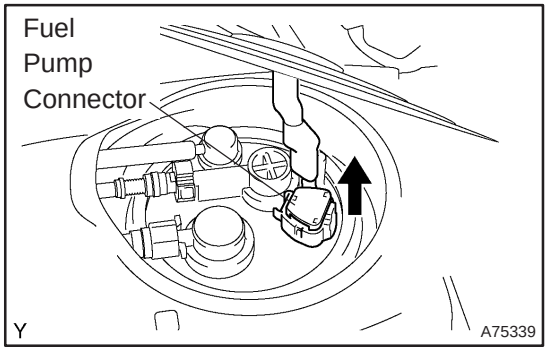

(a) Disconnect the fuel pump connector.
(b) Start the engine. After the engine has stopped, turn the ignition switch OFF.
(c) Disconnect the negative (–) battery cable.
(d) Connect the fuel pump connector.

3. FUEL SYSTEM

(a) When disconnecting the high fuel pressure line, a large amount of gasoline will spill out, so observe these procedures.
  (1) Discharge the pressure in the fuel system. (See step 2)
  (2) Disconnect the fuel pump tube. (See page 11–93)
  (3) Drain the fuel that remained inside the fuel pump tube.

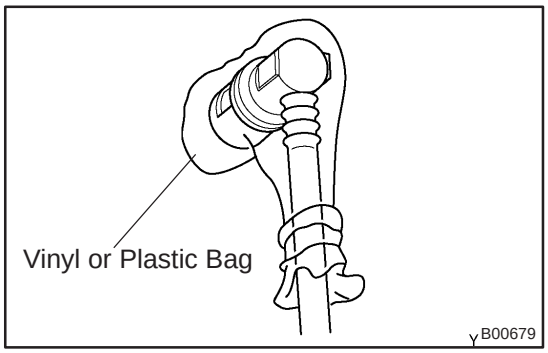

  (4) Cover the disconnected fuel pump tubes with a vinyl or a plastic bag to prevent damage and dirt.
  (5) Place a tray under the vehicle or point of disconnection to catch any fuel that may spill.

cardiagn.com

(b) Observe the following precautions when removing and installing fuel injectors.

NOTICE:

Never reuse the O–ring.

(1) When installing a new O–ring to the injector, be careful not to damage the injector.

(2) Coat the new O–ring with grease or gasoline before installing. Never use engine oil, gear oil or brake oil.

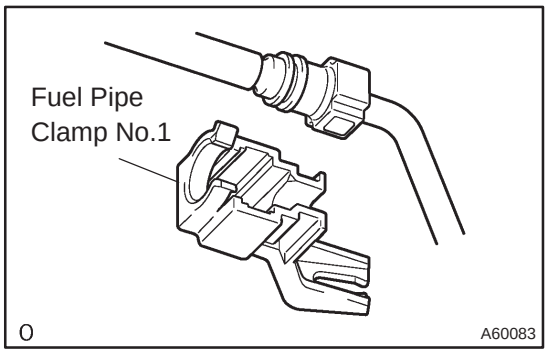

(c) Observe these following precautions when disconnecting the fuel tube connector (quick type).

(1) Remove the fuel pipe clamp No.1.

(2) Check that there is no dirt or mud on the pipe and around the connector before disconnecting them. Clean them if necessary.

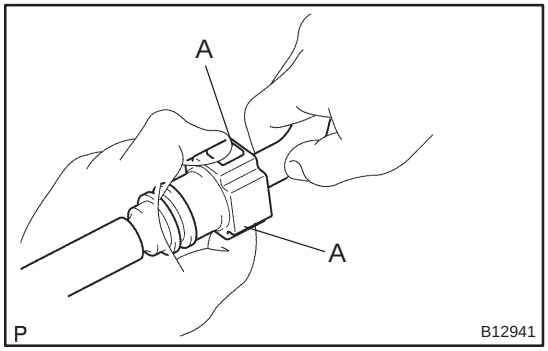

(3) Disconnect the connector from the hose while pinching part A with fingers as shown in the illustration.

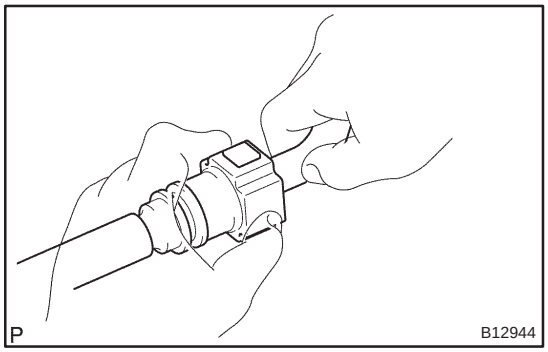

(4) When the connector and the pipe are stuck, push and pull the connector to release and pull the connector out from the pipe carefully.

(5) Inspect that there is no dirt or mud on the sealing surface of the disconnected pipe. Clean it away if necessary.

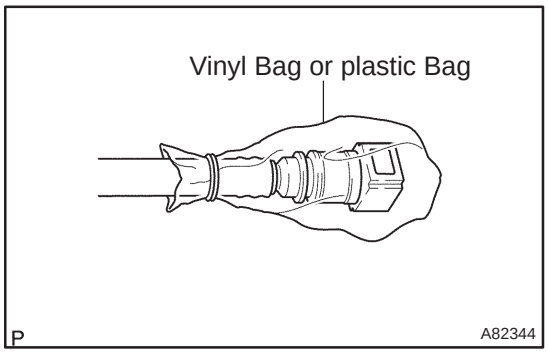

(6) To prevent the disconnected pipe and connector from being damaged and foreign objects from being introduced, cover them with a vinyl or plastic bag.

cardiagn.com

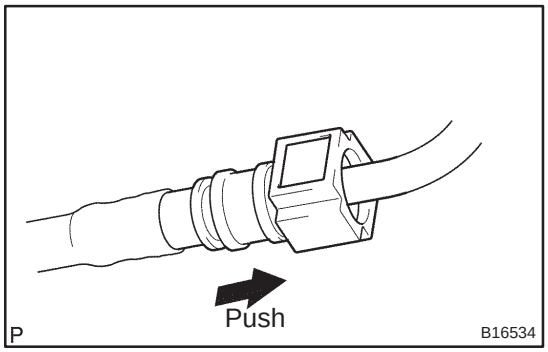

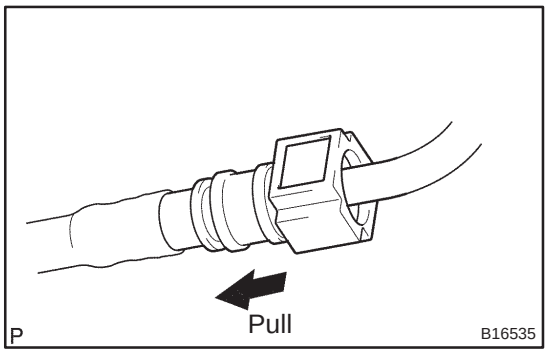

(d) Observe these precautions when connecting the fuel tube connectors (Quick Type):
  (1) Check that there is no damage or foreign objects in the connected part of the pipe.
  (2) Match the axis of the connector with the axis of the pipe, and push into the connector until the connector makes a ”click” sound. If the connection is tight, apply little amount of fresh engine oil on the tip of the pipe.
  (3) After having finished the connection, check if the pipe and the connector are securely connected by pulling on them.
  (4) Check for fuel leaks.

4. CHECK FOR FUEL LEAKS

(a) Check that there are no fuel leaks after doing maintenance anywhere on the fuel system. (See page 11–33)

cardiagn.com

FUEL TANK ASSY (DIESEL)

COMPONENTS

110UE–01

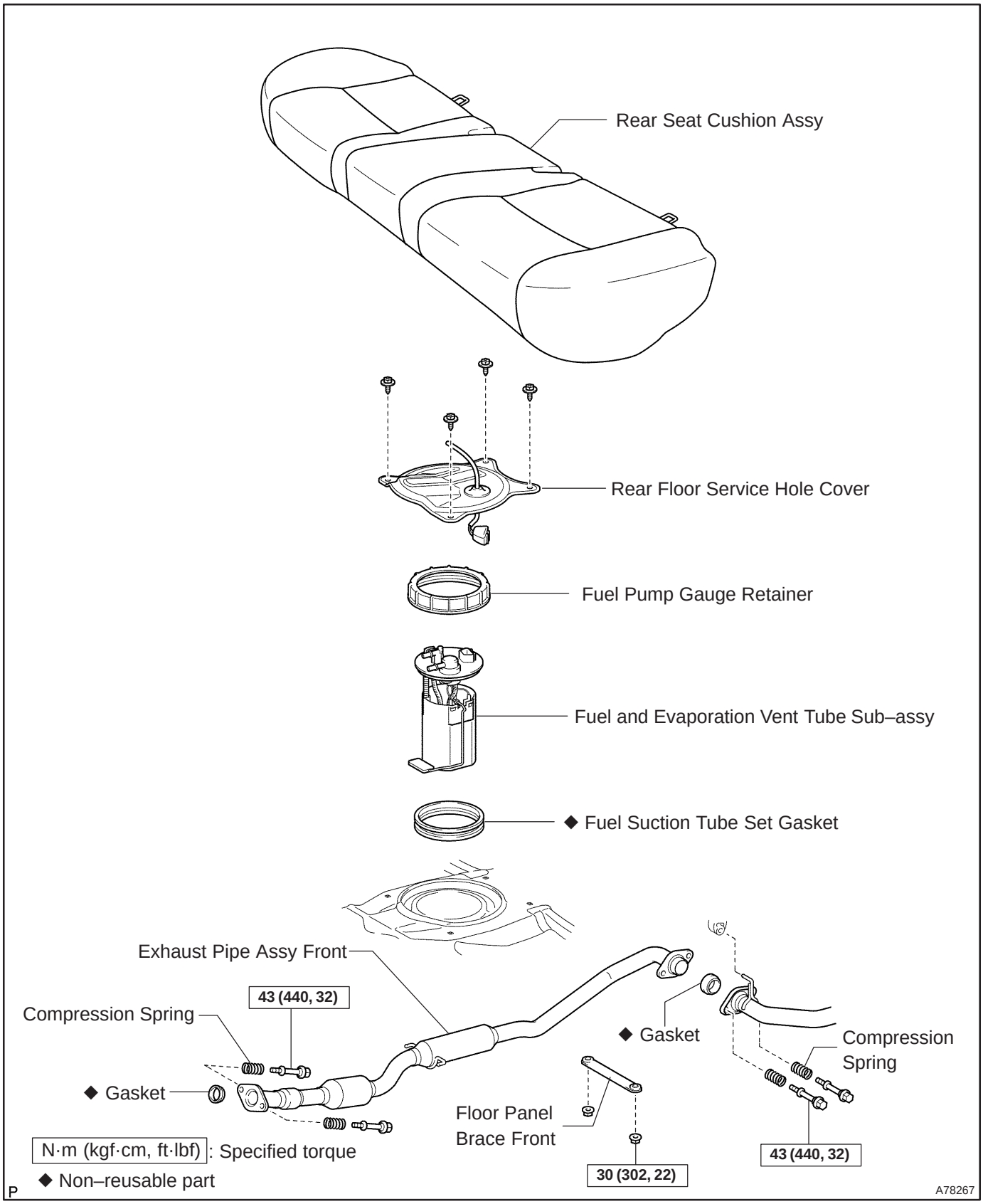

cardiagn.com

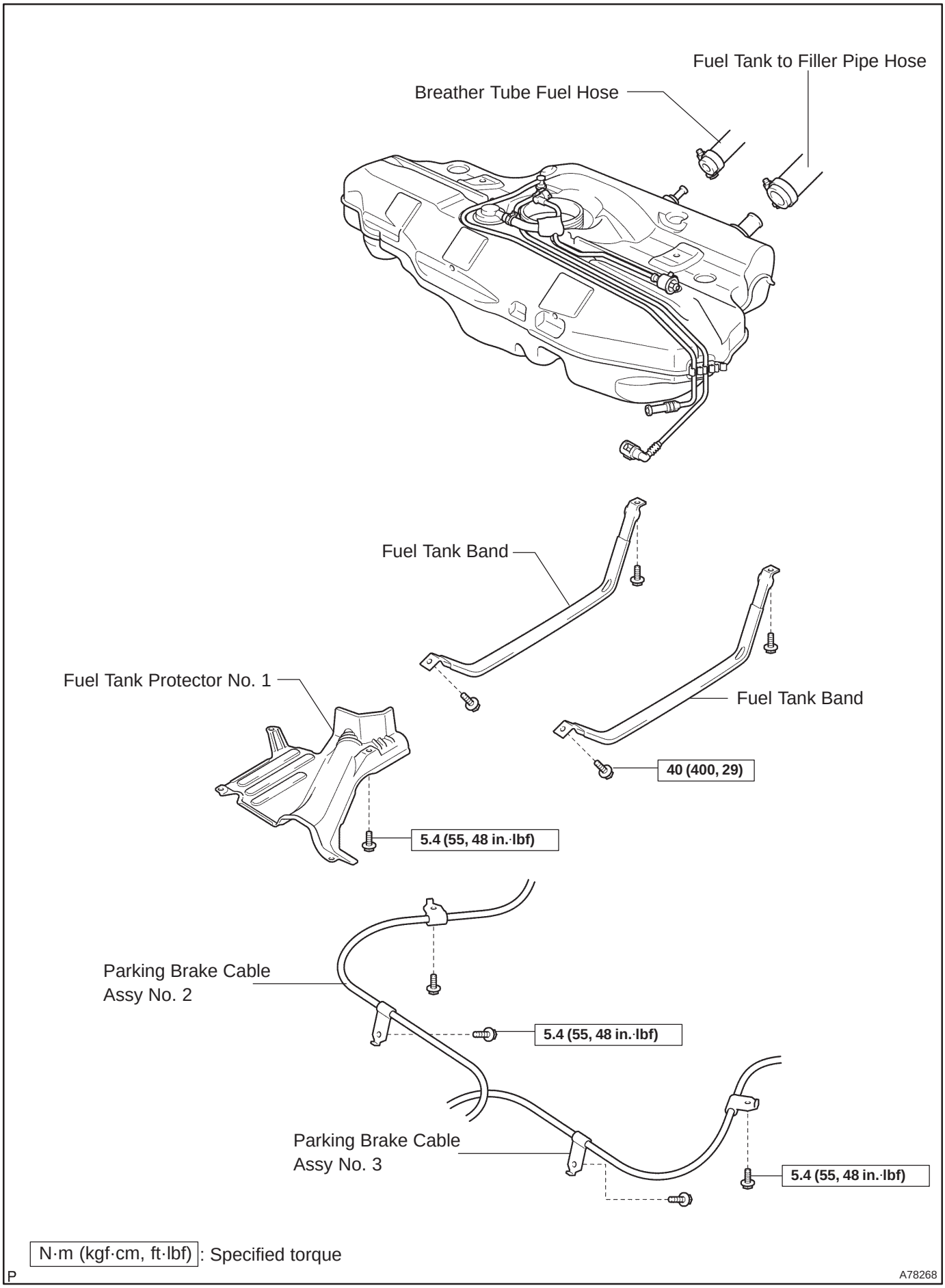

cardiagn.com

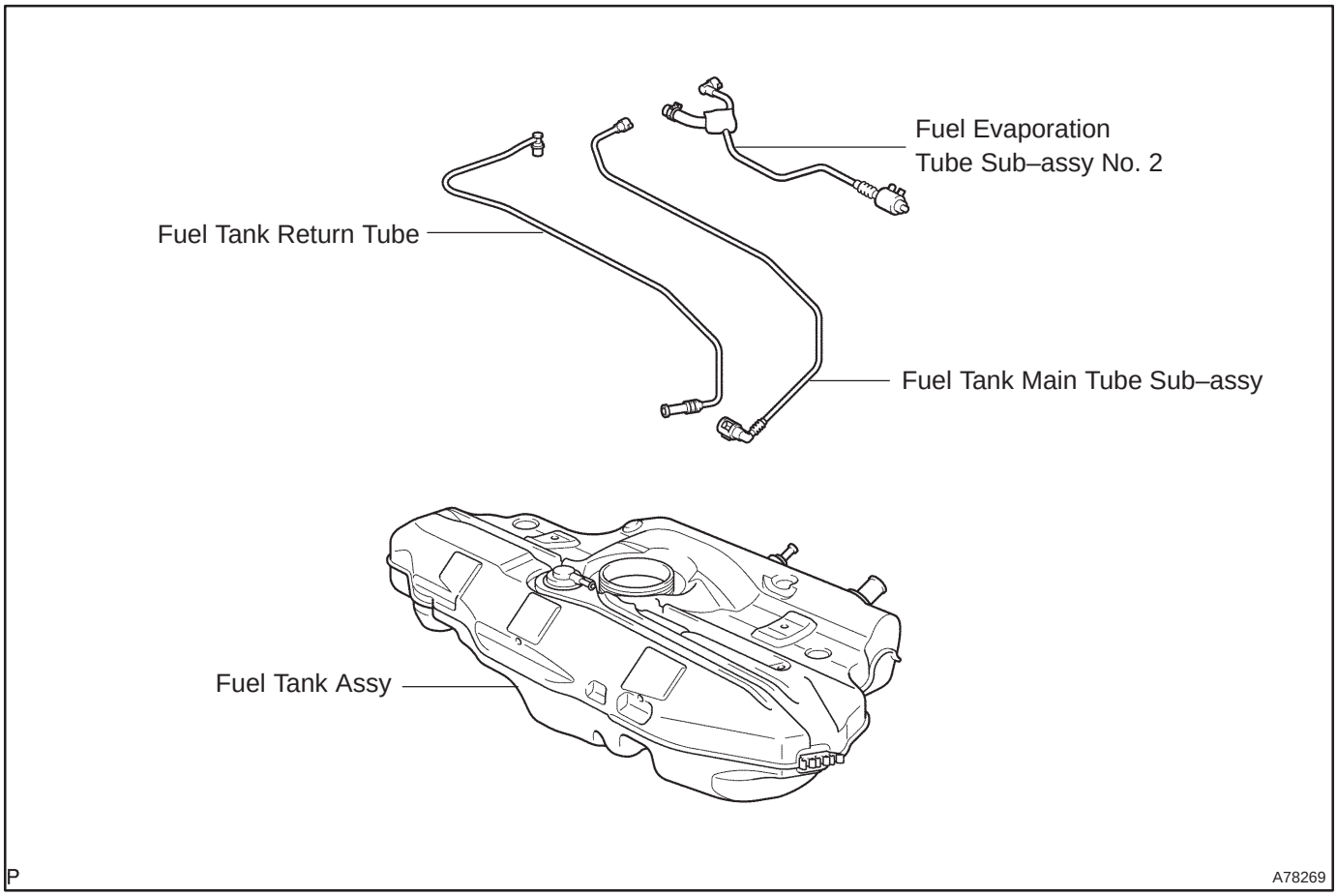

cardiagn.com

110UF–01

Removal & Installation and Disassembly & Reassembly

1. REMOVE REAR SEAT CUSHION ASSY (See page 72–27)

2. REMOVE REAR FLOOR SERVICE HOLE COVER

(a) Remove the 4 screws and the rear floor service hole cover.

(b) Disconnect the connector.

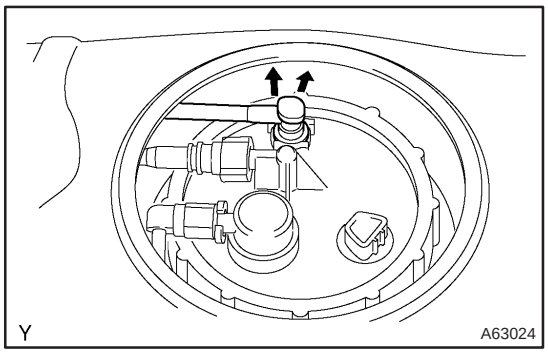

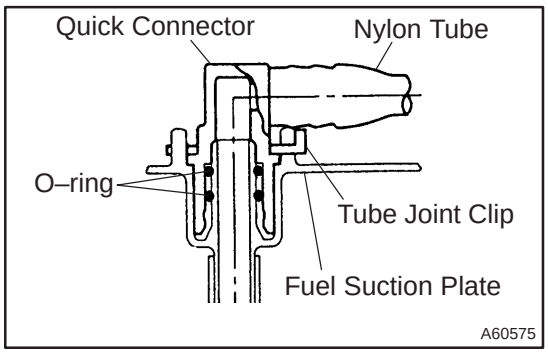

3. DISCONNECT FUEL TANK RETURN TUBE

(a) Remove the tube joint clip and pull out the fuel tank return tube.

NOTICE:

- **Check if there is any dirt or mud around the connector before this operation and remove the dirt as necessary.**
- **Be careful of mud because the quick connector has an O–ring which seals the pipe and the connector that can be contaminated.**
- **Do not use any tool in this operation.**
- **Do not bend or twist the nylon tube.**
- **Keep the plug free of foreign objects.**
- **To protect the tube, cover it with a vinyl or a plastic bag after checking.**

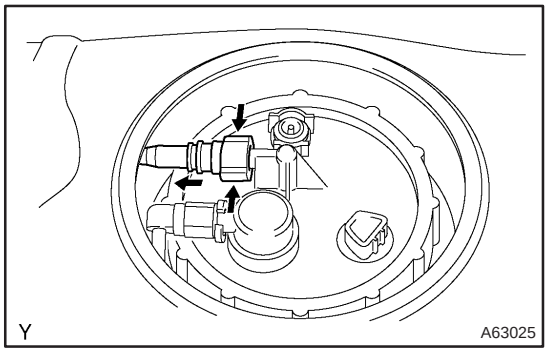

4. DISCONNECT FUEL TANK MAIN TUBE SUB–ASSY

(a) Pinch the tube connector then pull out the fuel tank main tube.

NOTICE:

- **Check if there is any dirt or mud around the connector before this operation and remove the dirt as necessary.**
- **Be careful of mud because the quick connector has an O–ring which seals the pipe and the connector that can be contaminated.**
- **Do not use any tool in this operation.**
- **Do not bend or twist the nylon tube.**
- **To protect the tube, cover it with a vinyl or a plastic bag after checking.**
- **When the connector and the pipe are stuck, push and pull the connector to release. Pull out the connector from the pipe carefully.**

cardiagn.com

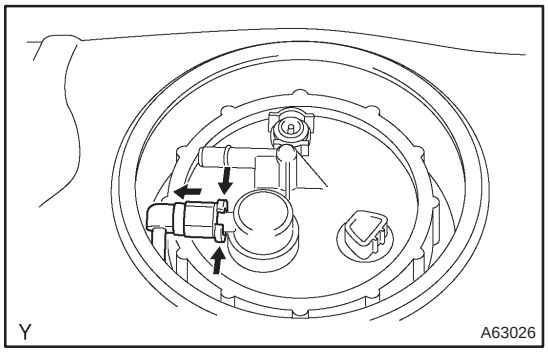

5. DISCONNECT FUEL EVAPORATION TUBE SUB–ASSY NO.2

(a) Pinch the quick connector then pull out the fuel evaporation tube sub–assy No. 2.

NOTICE:

- **Check if there is any dirt or mud around the connector before this operation and remove the dirt as necessary.**
- **Be careful of mud because the quick connector has an O–ring which seals the pipe and the connector that can be contaminated.**
- **Do not use any tool in this operation.**
- **Do not bend or twist the nylon tube.**
- **To protect the tube, cover it with a vinyl or a plastic bag after checking.**
- **When the connector and the pipe are stuck, push and pull the connector to release. Pull out the connector from the pipe carefully.**

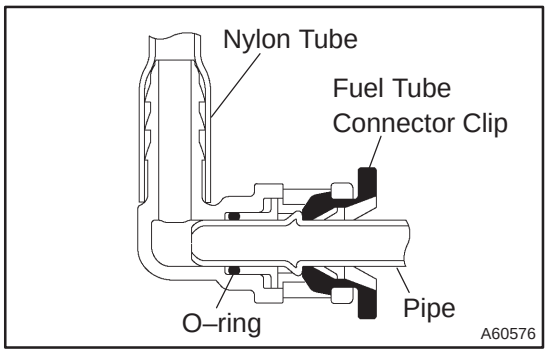

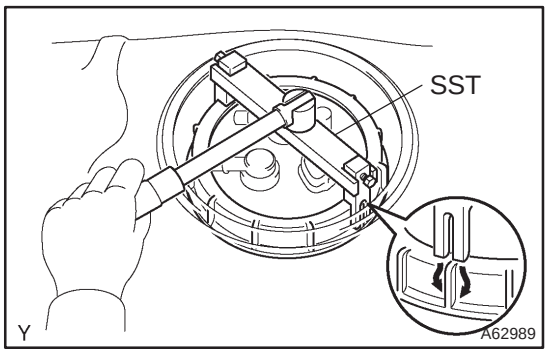

6. REMOVE FUEL AND EVAPORATION VENT TUBE SUB–ASSY

(a) Using SST, loosen the retainer.
SST 09808–14010

(b) Remove the retainer.

(c) Pull out the fuel pump assembly.

CAUTION:

Be careful that the arm of the sender gauge should not bent.

7. DRAIN FUEL

8. REMOVE FLOOR PANEL BRACE FRONT (See page 15–10)

9. REMOVE EXHAUST PIPE ASSY FRONT (See page 15–10)

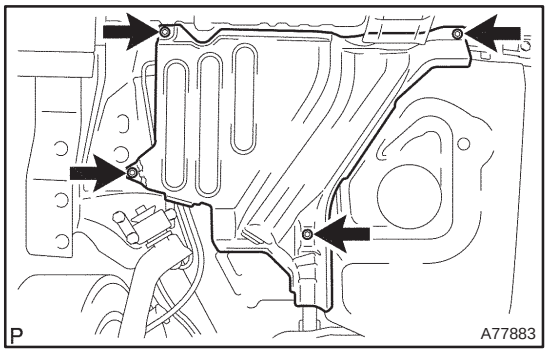

10. REMOVE FUEL TANK PROTECTOR NO.1

(a) Remove the 4 bolts and the fuel tank protector.

cardiagn.com

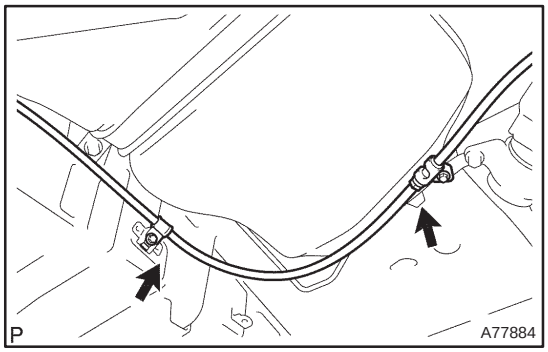

11. REMOVE PARKING BRAKE CABLE ASSY NO.2

(a) Remove the 2 set bolts of the parking brake cable.

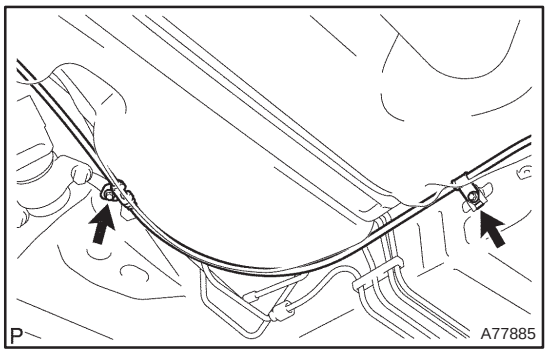

12. REMOVE PARKING BRAKE CABLE ASSY NO.3

(a) Remove the 2 set bolts of the parking brake cable.

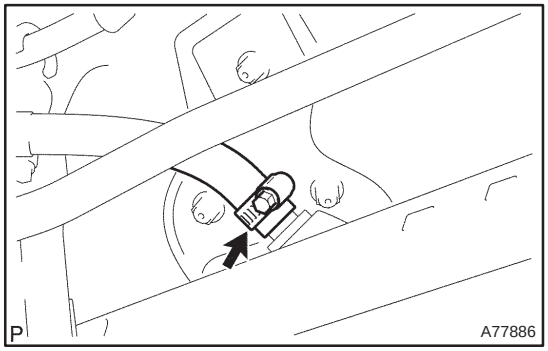

13. DISCONNECT BREATHER TUBE FUEL HOSE

(a) Loosen the hose clamp and disconnect the fuel tank breather hose.

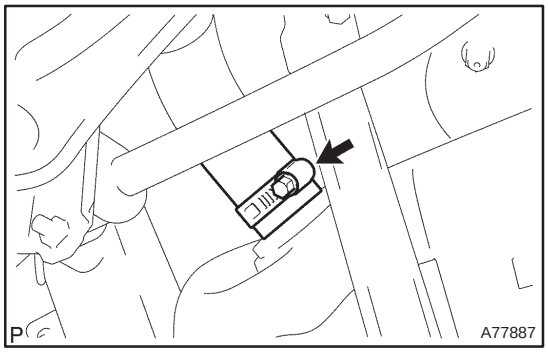

14. DISCONNECT FUEL TANK TO FILLER PIPE HOSE

(a) Loosen the hose clamp and disconnect the fuel tank to filler pipe hose.

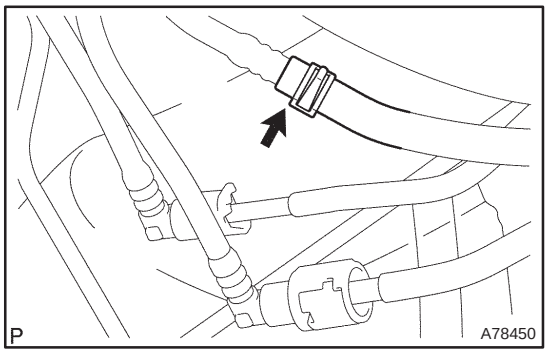

15. DISCONNECT FUEL TANK RETURN TUBE

cardiagn.com

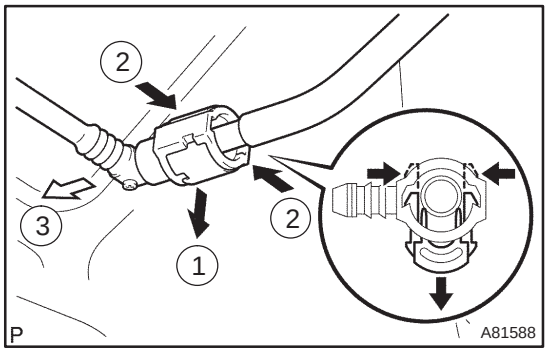

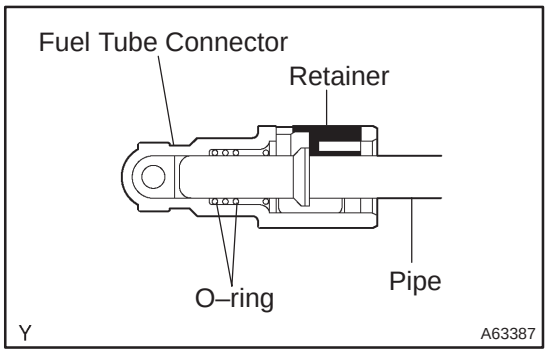

16. DISCONNECT FUEL TANK MAIN TUBE SUB–ASSY

(a) Pinch the tab of the retainer to remove the lock claws and pull down it as shown in the illustration.

(b) Pull out the fuel tank main tube.

NOTICE:

- **Check if there is any dirt or mud around the connector before this operation and remove the dirt as necessary.**
- **Be careful of mud because the quick connector has an O–ring which seals the pipe and the connector that can be contaminated.**
- **Do not use any tool in this operation.**
- **Do not bend or twist the nylon tube. Protect the connector by covering it with a vinyl or a plastic bag.**
- **When the pipe and connector are stuck, push and pull the connector to release. Pull out the connector from the pipe carefully.**

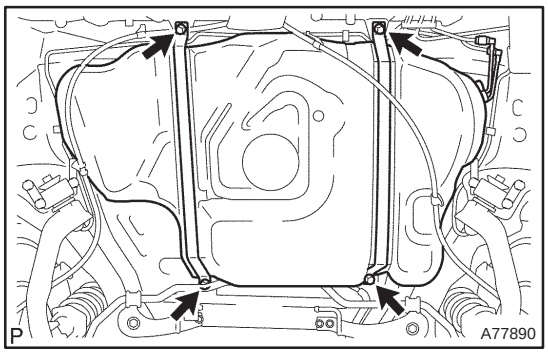

17. REMOVE FUEL TANK ASSY

(a) Set up a transmission jack under the fuel tank.

(b) Remove the 4 bolts and 2 fuel tank bands, and then remove the fuel tank.

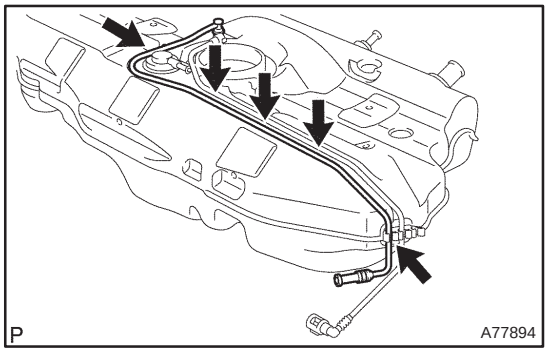

18. REMOVE FUEL TANK MAIN TUBE SUB–ASSY

(a) Unfasten the 5 claws, and remove the fuel tank return tube from the fuel tank.

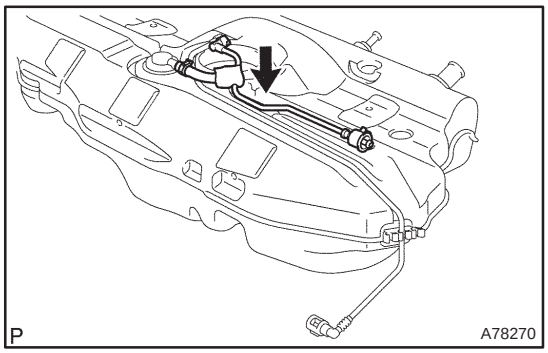

19. REMOVE FUEL EVAPORATION TUBE SUB–ASSY NO.2

(a) Unfasten the claw, and remove the fuel evaporation tube from the fuel tank.

cardiagn.com

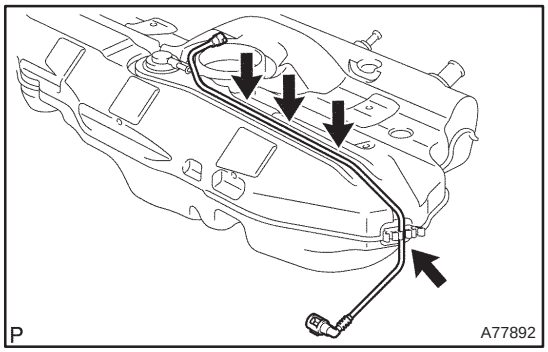

20. REMOVE FUEL TANK MAIN TUBE SUB–ASSY

(a) Unfasten the 4 claws, and remove the fuel tank main tube from the fuel tank.

21. INSTALL FUEL TANK MAIN TUBE SUB–ASSY

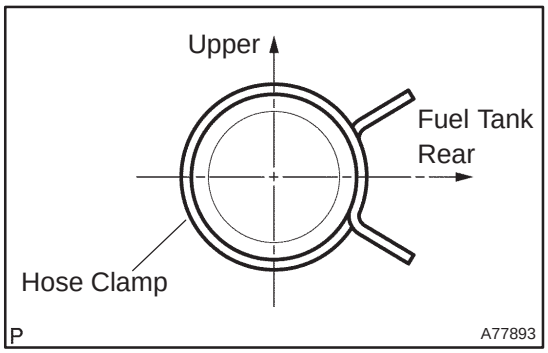

22. INSTALL FUEL EVAPORATION TUBE SUB–ASSY NO.2

(a) Install the hose clamp as shown in the illustration.

23. INSTALL FUEL TANK RETURN TUBE

24. INSTALL FUEL TANK ASSY
Torque: 40 N·m (400 kgf·cm, 29 ft·lbf)

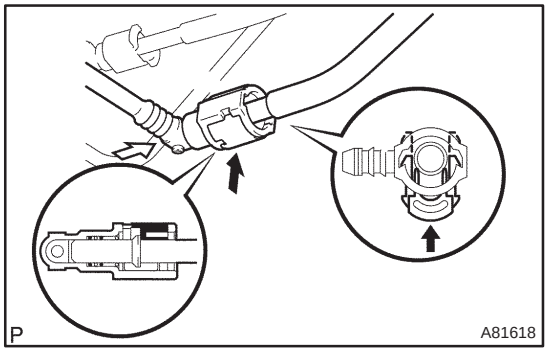

25. CONNECT FUEL TANK MAIN TUBE SUB–ASSY

(a) Push in the fuel tube connector to the pipe, and push up retainer to lock the claws.

NOTICE:

- **Check if there is any damage or foreign objects on the connected part.**
- **After connecting, check if the quick connector and the pipe are securely connected by pulling on them.**

26. CONNECT FUEL TANK RETURN TUBE

27. CONNECT FUEL TANK TO FILLER PIPE HOSE

28. CONNECT BREATHER TUBE FUEL HOSE

29. INSTALL PARKING BRAKE CABLE ASSY NO.3
Torque: 5.4 N·m (55 kgf·cm, 48 in.·lbf)

30. INSTALL PARKING BRAKE CABLE ASSY NO.2
Torque: 5.4 N·m (55 kgf·cm, 48 in.·lbf)

31. INSTALL FUEL TANK PROTECTOR NO.1
Torque: 5.4 N·m (55 kgf·cm, 48 in.·lbf)

32. INSTALL EXHAUST PIPE ASSY FRONT (See page 15–10)

33. ADD FUEL

cardiagn.com

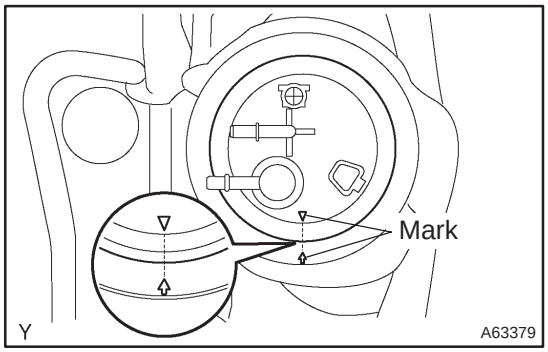

34. INSTALL FUEL AND EVAPORATION VENT TUBE SUB–ASSY

(a) Align the arrow marks of the fuel pump bracket and the fuel tank.

(b) Temporarily install the retainer.

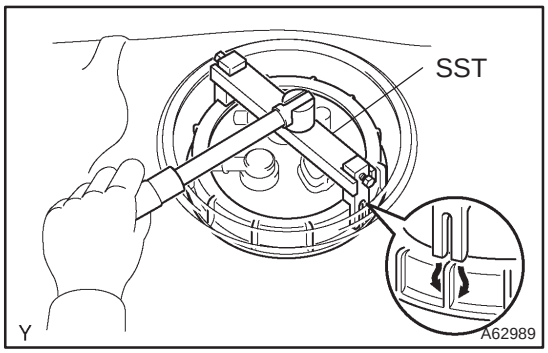

(c) Mount SST to the retainer.
SST 09808–14010

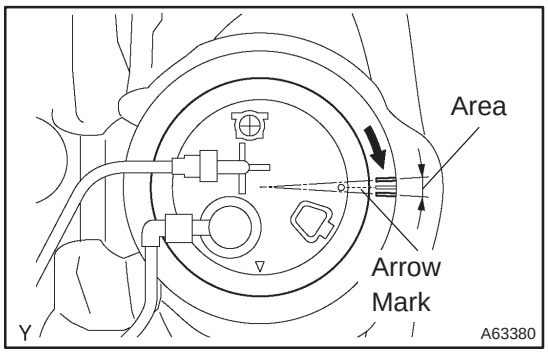

(d) Tighten the retainer until the arrow mark located on the retainer is positioned within the area shown in the illustration.

(e) Check that the arrow marks of the fuel pump bracket and fuel tank are aligned.

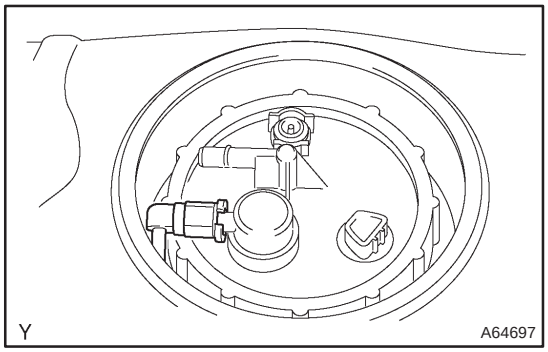

35. CONNECT FUEL EVAPORATION TUBE SUB–ASSY NO.2

(a) Push in the quick connector to the pipe until connector makes ”click” sound.

NOTICE:

- **Check if there is any damage or foreign objects on the connected part of the pipe.**
- **After connecting, check if the pipe and the connector are securely connected by pulling on them.**

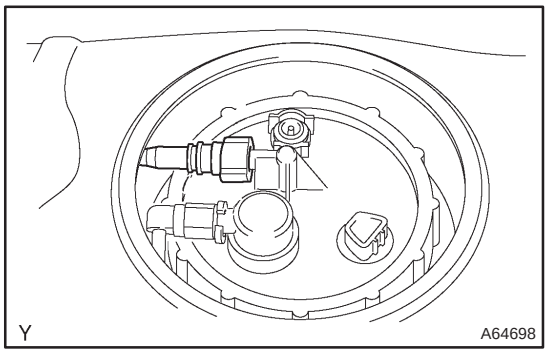

36. CONNECT FUEL TANK MAIN TUBE SUB–ASSY

(a) Push in the quick connector to the pipe until connector makes ”click” sound.

NOTICE:

- **Check if there is any damage or foreign objects on the connected part of the pipe.**
- **After connecting, check if the pipe and the connector are securely connected by pulling on them.**

cardiagn.com

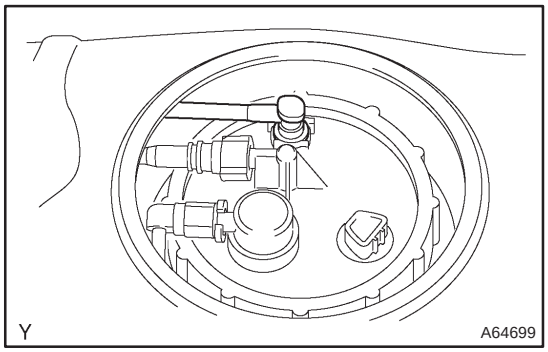

37. CONNECT FUEL TANK RETURN TUBE

(a) Connect the fuel tank return tube with the tube joint clip.

NOTICE:

- **Check that there is no scratch or foreign objects on the connecting parts.**
- **Check that the connector is inserted securely.**
- **Check that the clip of the tube joint is on the collar of the connector.**
- **After installing the tube joint clip, check that the connector is not pulled off.**

38. CHECK FOR FUEL LEAKS (See page 11–60)

39. CHECK FOR EXHAUST GAS LEAKS

40. INSTALL FLOOR PANEL BRACE FRONT (See page 15–10)

41. INSTALL REAR FLOOR SERVICE HOLE COVER

42. INSTALL REAR SEAT CUSHION ASSY (See page 72–27)

cardiagn.com

FUEL TANK ASSY (GASOLINE)

COMPONENTS

110U6–01

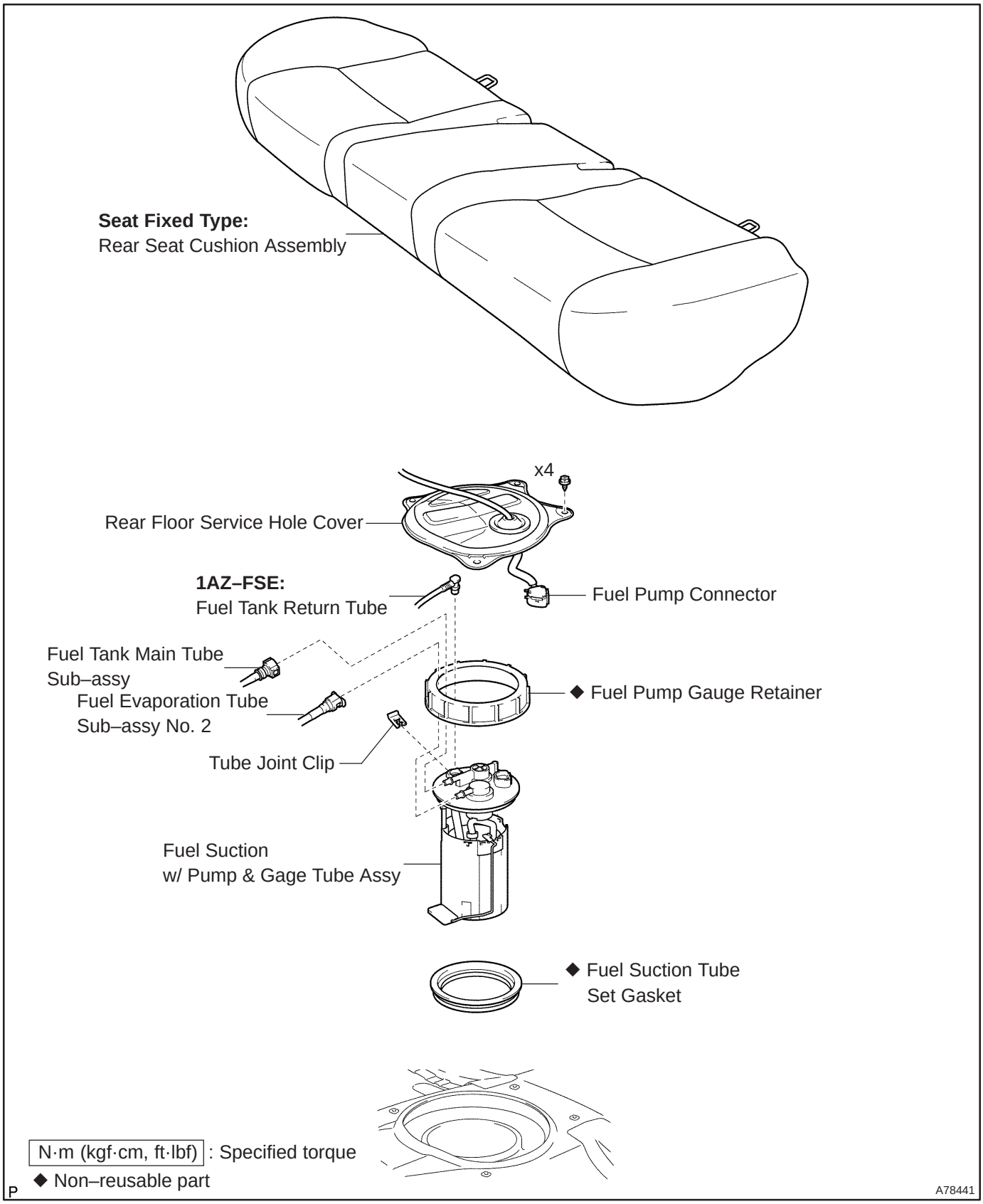

cardiagn.com

1ZZ–FE/3ZZ–FE:

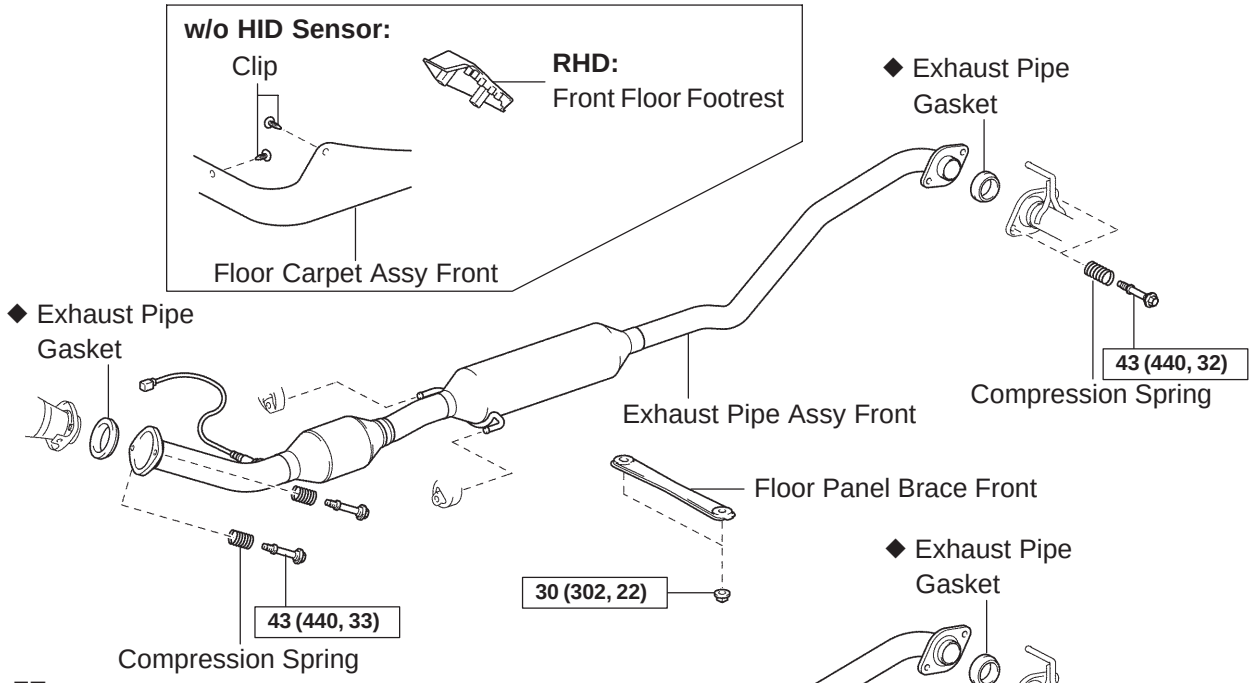

1AZ–FE:

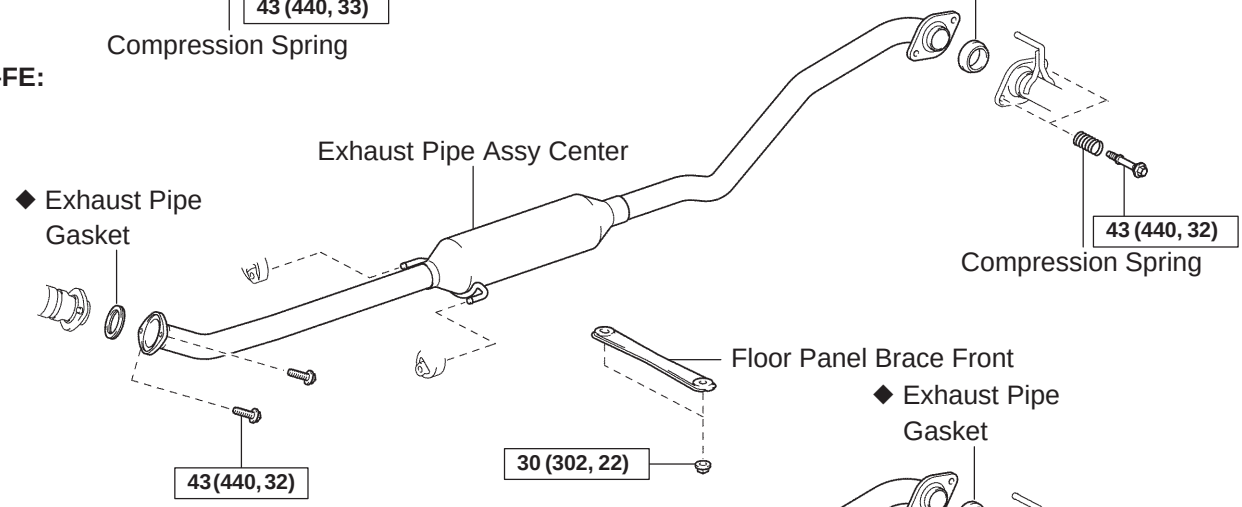

1AZ–FE (Leaded Gasoline)
1AZ–FSE:

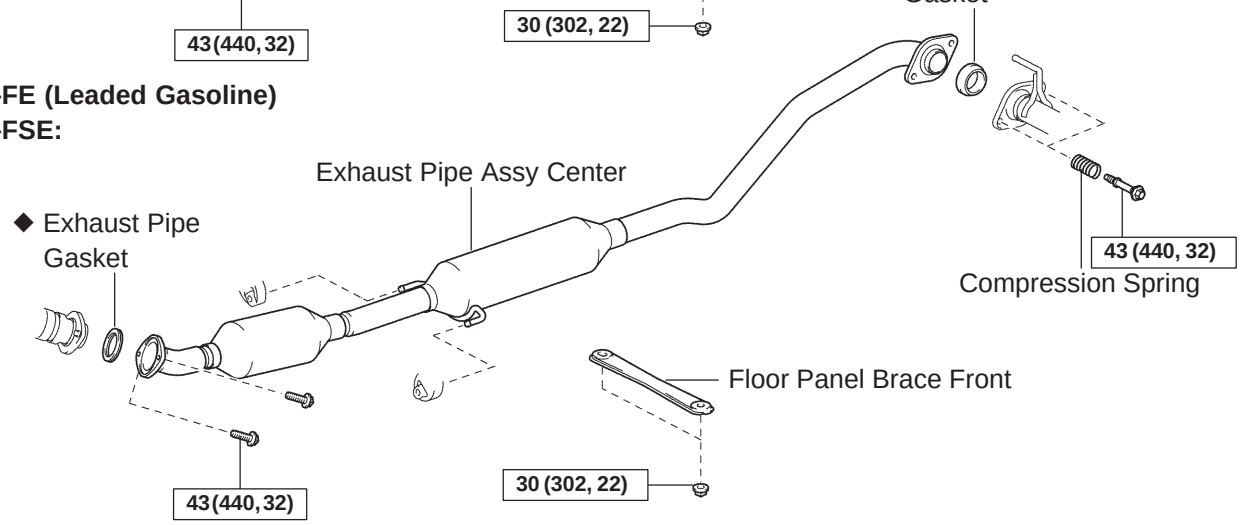

N·m (kgf·cm, ft·lbf) : Specified torque
◆ Non–reusable part

P A78517

cardiagn.com

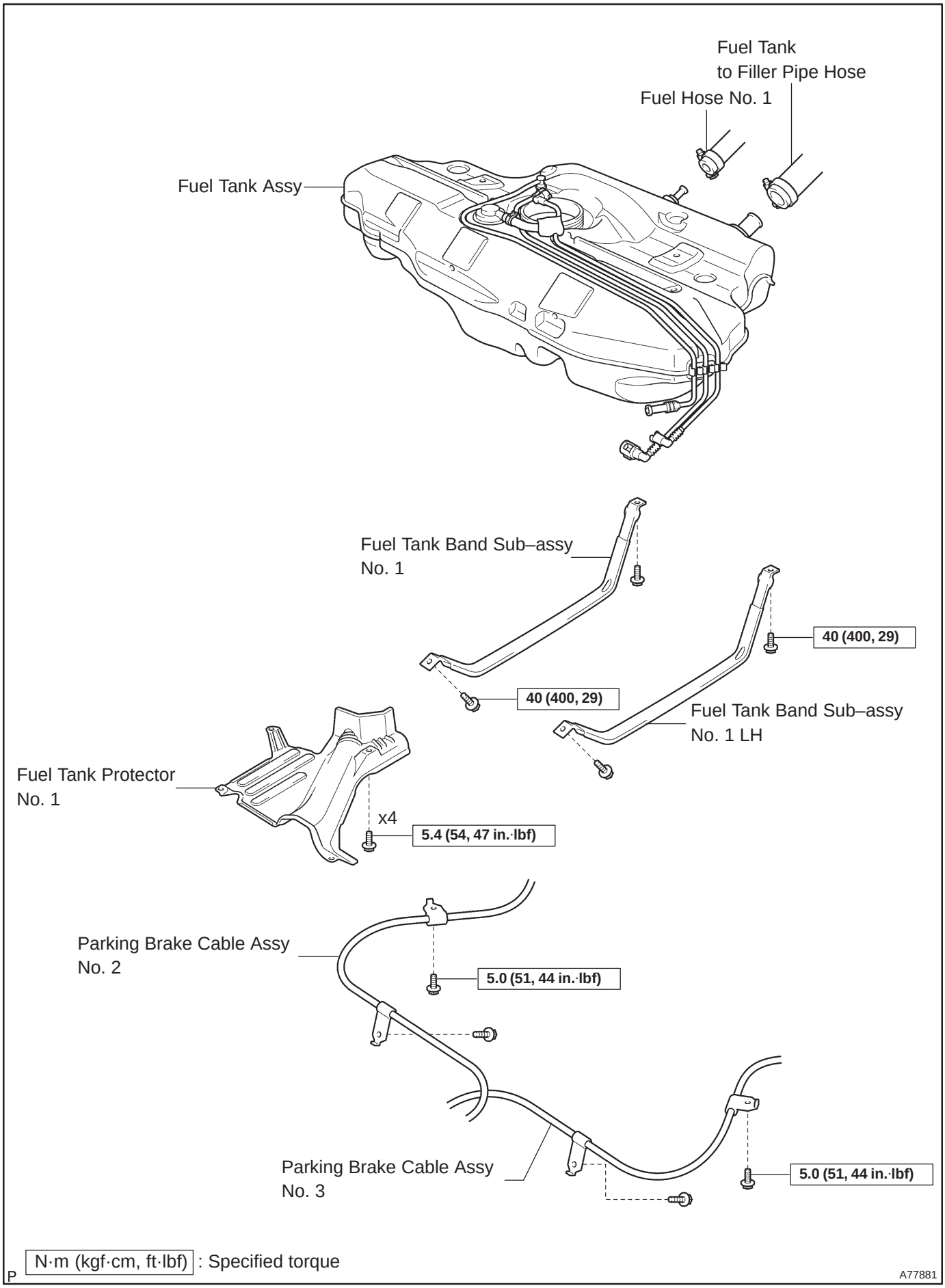

cardiagn.com

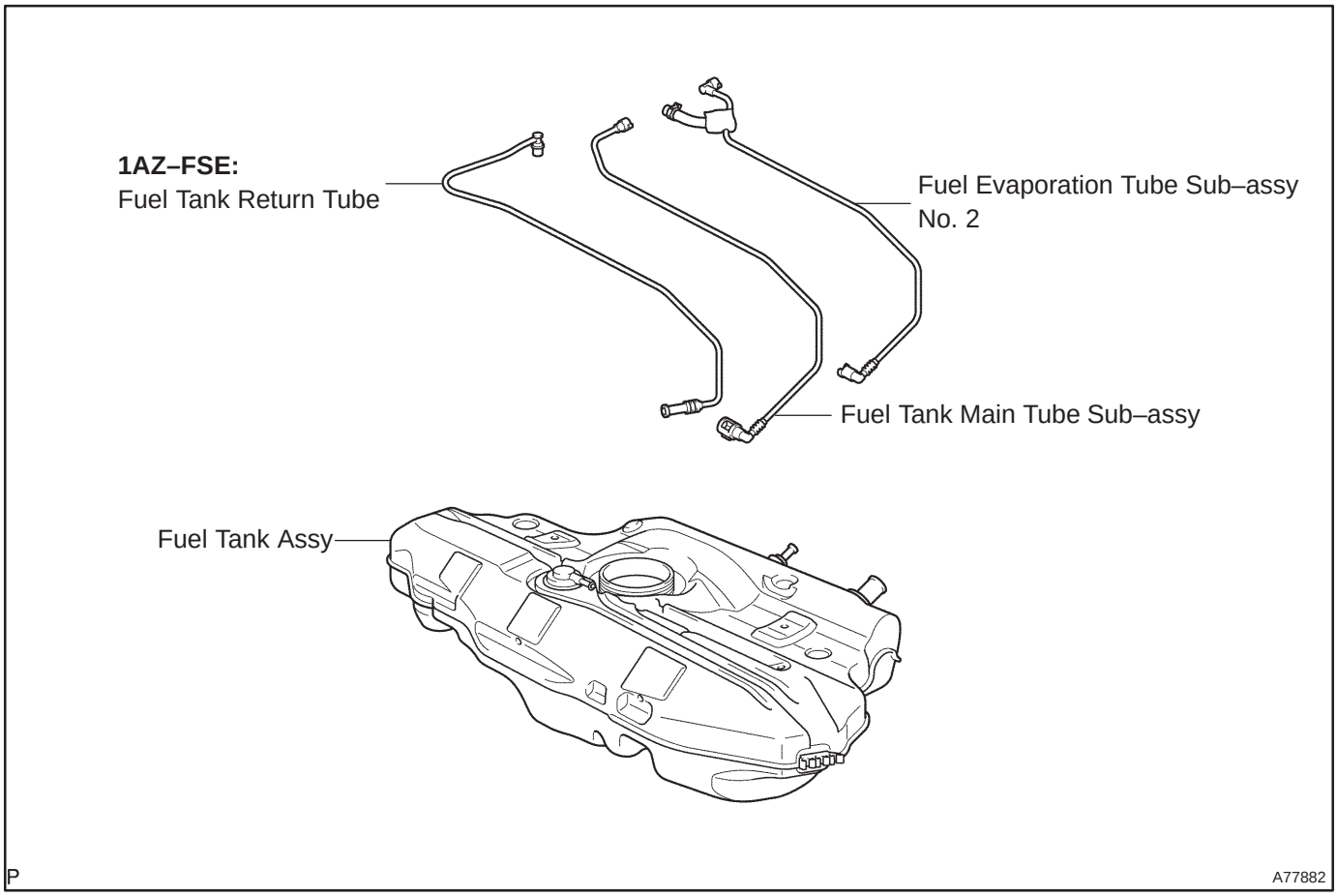

cardiagn.com

110U5–01

Removal & Installation and Disassembly & Reassembly

1. DISCHARGE FUEL SYSTEM PRESSURE

HINT:

- 1ZZ–FE/3ZZ–FE: 11–1
- 1AZ–FE: 11–15
- 1AZ–FSE: 11–30

2. REMOVE REAR SEAT CUSHION ASSY (SEAT FIXED TYPE) (See page 72–32)

3. REMOVE COVER, RR FLOOR SERVICE HOLE (See page 11–85)

4. DISCONNECT FUEL TANK RETURN TUBE (1AZ–FSE ENGINE TYPE) (See page 11–85)

5. DISCONNECT FUEL TANK MAIN TUBE SUB–ASSY (See page 11–85)

6. DISCONNECT FUEL EVAPORATION TUBE SUB–ASSY NO.2 (See page 11–85)

7. REMOVE FUEL SUCTION W/PUMP & GAGE TUBE ASSY (See page 11–85)

SST 09808–14010

8. DRAIN FUEL

9. REMOVE FRONT FLOOR FOOTREST (W/O HID SENSOR)

10. REMOVE FLOOR PANEL BRACE FRONT (See page 15–2)

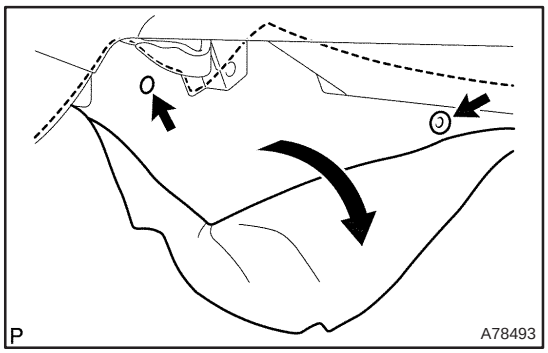

11. REMOVE EXHAUST PIPE ASSY CENTER (1ZZ–FE/3ZZ–FE ENGINE TYPE)

(a) Using a clip remover, remove the 2 clips. (w/o HID Sensor)

(b) Open the floor carpet. (w/o HID Sensor)

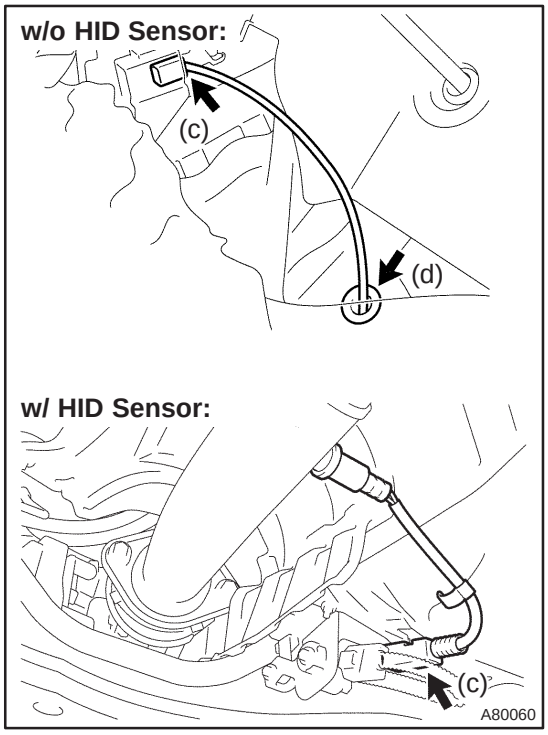

(c) Disconnect the heated oxygen sensor connector.

(d) Remove the grommet. (w/o HID Sensor)

cardiagn.com

(e) Remove the 4 bolts and 4 compression springs.
(f) Remove the exhaust pipe front from the 2 exhaust pipe supports.
(g) Remove each gasket from the exhaust manifold and the exhaust pipe front.

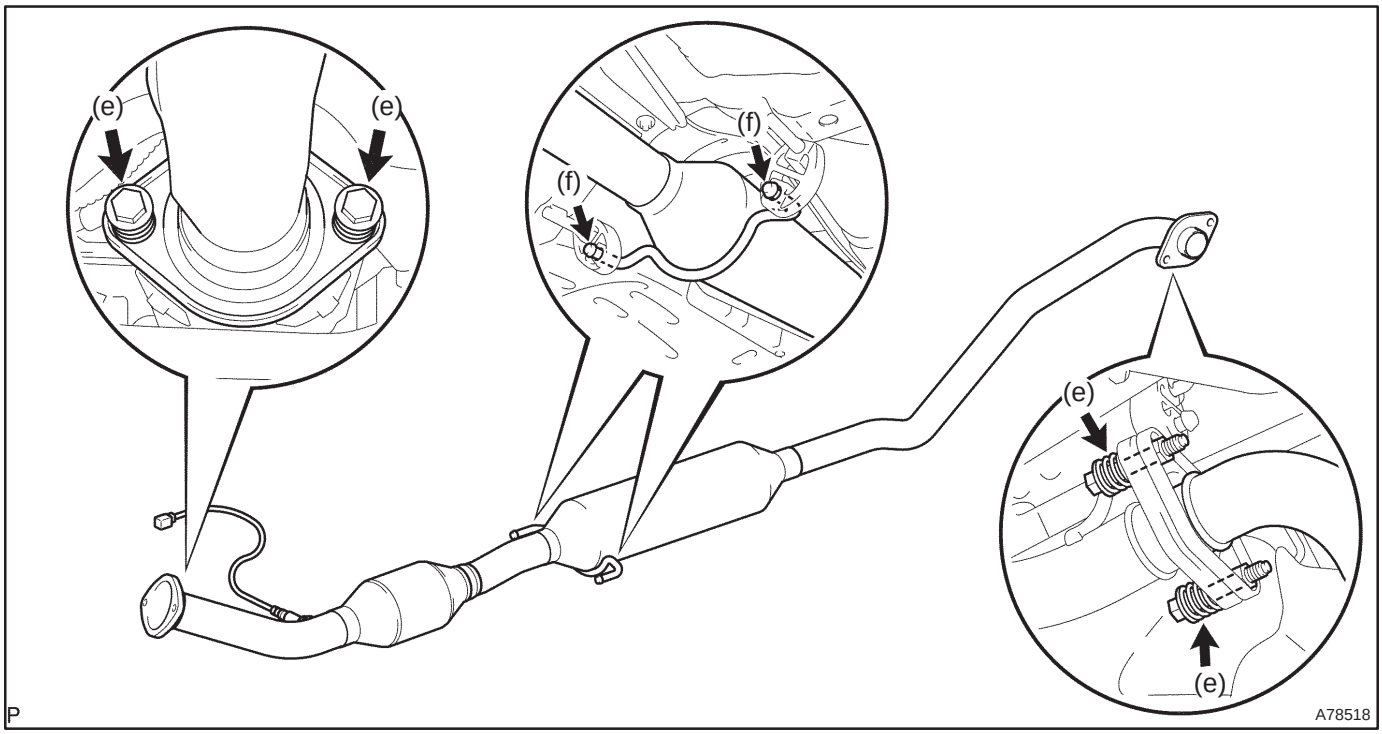

cardiagn.com

12. REMOVE EXHAUST PIPE ASSY CENTER (1AZ–FE/1AZ–FSE ENGINE TYPE)

(a) Remove the 4 bolts and 2 compression springs.

(b) Remove the exhaust pipe center and the gasket from the 2 exhaust pipe supports.

(c) Remove the gasket from the exhaust pipe center.

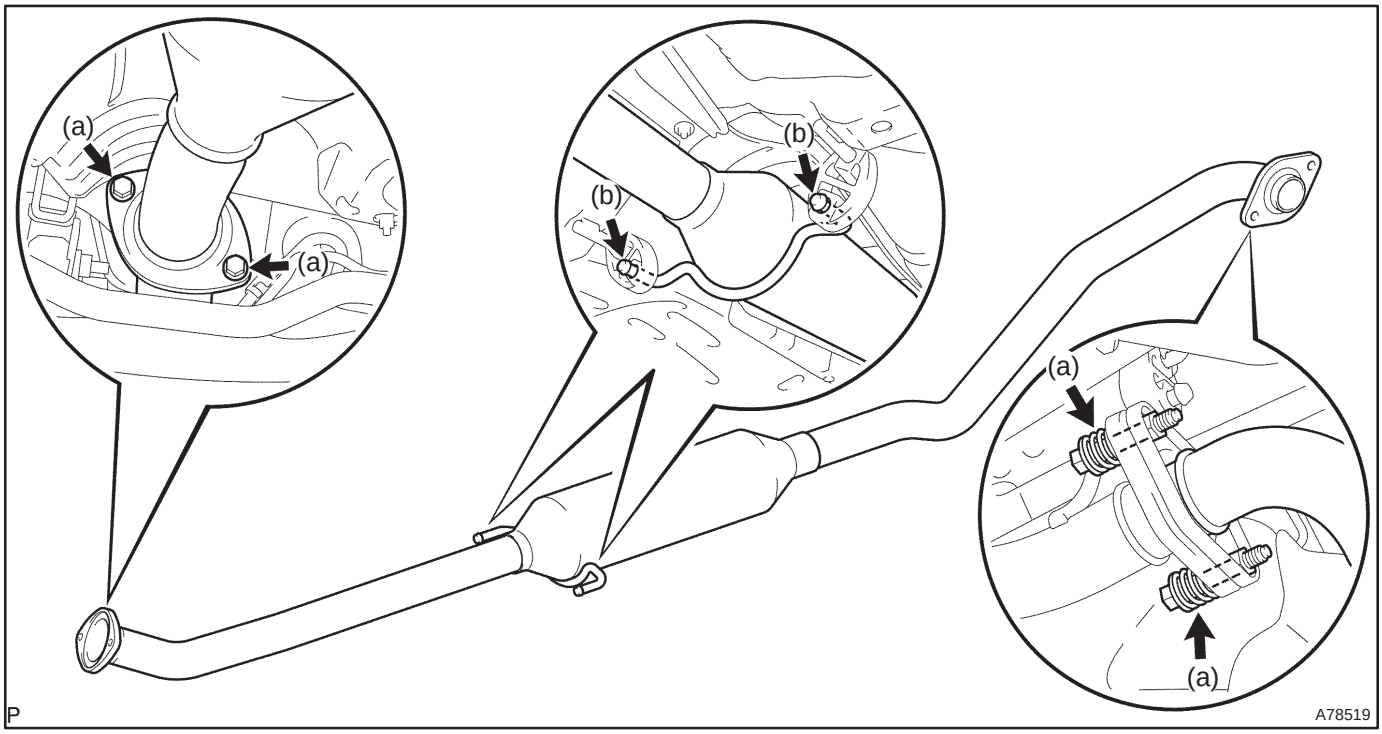

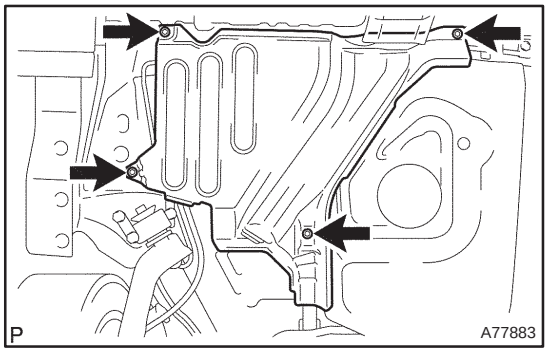

13. REMOVE FUEL TANK PROTECTOR NO.1

(a) Remove the 4 bolts, and then remove the fuel tank protector.

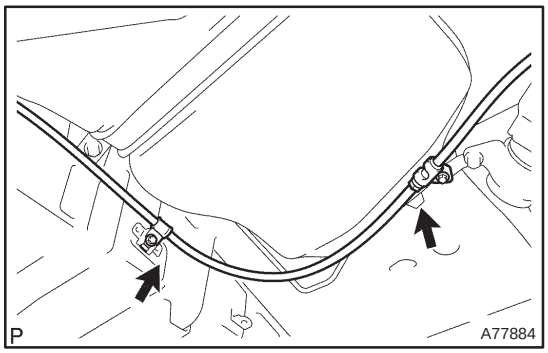

14. REMOVE PARKING BRAKE CABLE ASSY NO.2

(a) Remove the 2 set bolts of the parking brake cable.

cardiagn.com

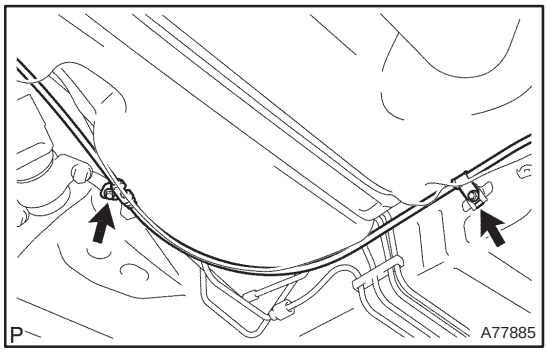

15. REMOVE PARKING BRAKE CABLE ASSY NO.3

(a) Remove the 2 set bolts of the parking brake cable.

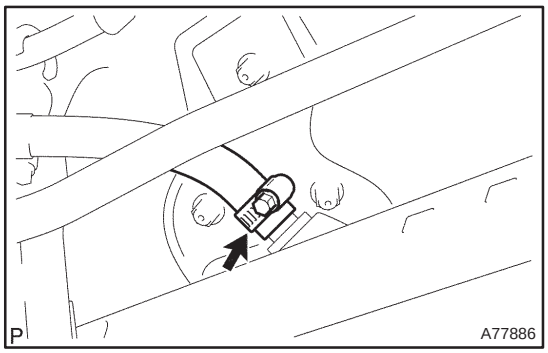

16. DISCONNECT BREATHER TUBE FUEL HOSE

(a) Loosen the hose clamp and disconnect the fuel tank breather hose.

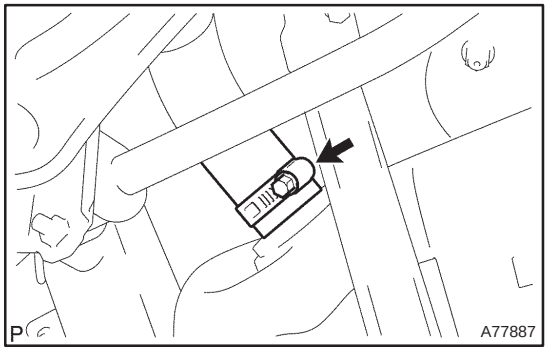

17. DISCONNECT FUEL TANK TO FILLER PIPE HOSE

(a) Loosen the hose clamp and disconnect the fuel tank to filler pipe hose.

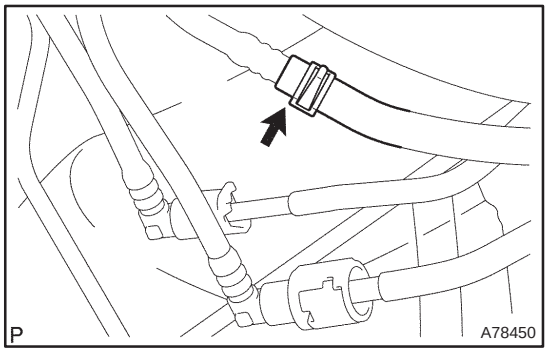

18. DISCONNECT FUEL TANK RETURN TUBE (1AZ–FSE ENGINE TYPE)

cardiagn.com

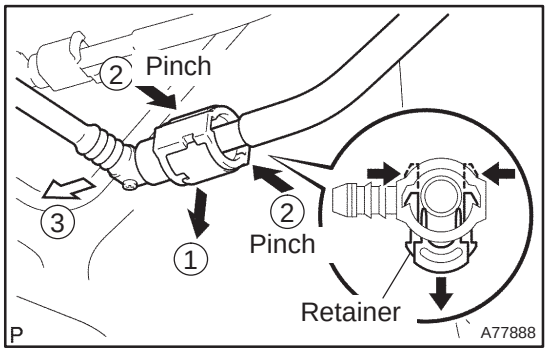

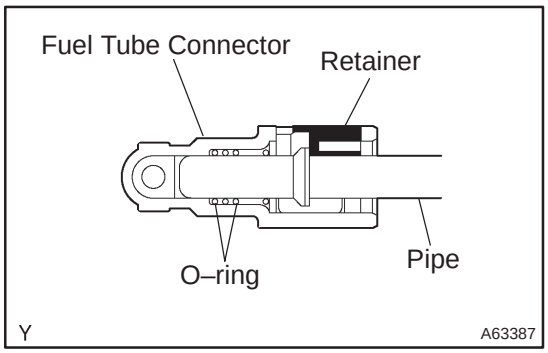

19. DISCONNECT FUEL TANK MAIN TUBE SUB–ASSY

(a) Pinch the tab of the retainer to remove the lock claws and pull down it as shown in the illustration.

(b) Pull out the fuel tank main tube.

NOTICE:

- **Check if there is any dirt or mud around the connector before this operation and remove the dirt as necessary.**
- **Be careful of mud because the quick connector has an O–ring which seals the pipe and the connector that can be contaminated.**
- **Do not use any tool in this operation.**
- **Do not bend or twist the nylon tube. Protect the connector by covering it with a vinyl or plastic bag.**
- **When the pipe and connector are stuck, push and pull the connector to release. Pull out the connector from the pipe.**

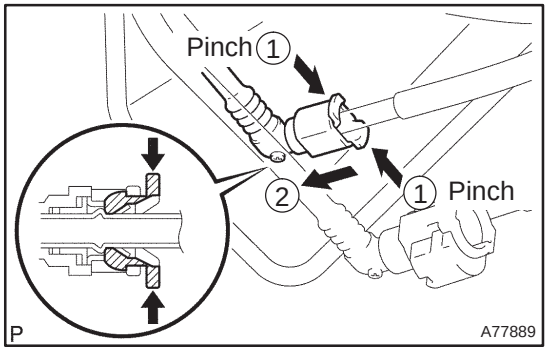

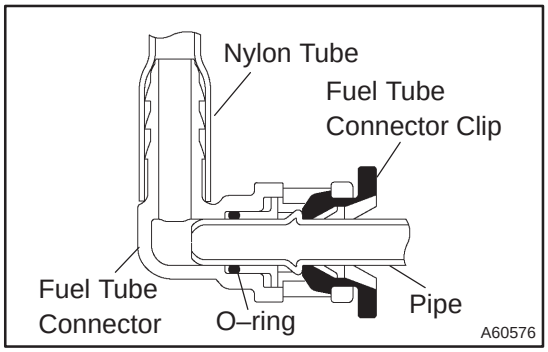

20. DISCONNECT FUEL EVAPORATION TUBE SUB–ASSY NO.2

(a) Pinch the fuel tube connector clip and pull out the fuel evaporation tube.

NOTICE:

- **Check if there is any dirt or mud around the connector before this operation and remove the dirt as necessary.**
- **Be careful of mud because the quick connector has an O–ring which seals the pipe and the connector that can be contaminated.**
- **Do not use any tool in this operation.**
- **Do not bend or twist the nylon tube. Protect the connector by covering it with a vinyl or plastic bag.**
- **When the pipe and connector are stuck, push and pull the connector to release. Pull out the connector from the pipe.**

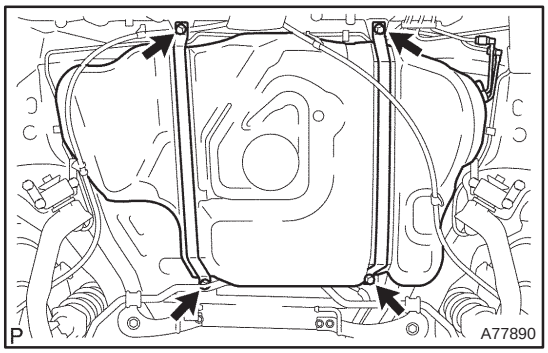

21. REMOVE FUEL TANK ASSY

(a) Set a transmission jack to the fuel tank.

(b) Remove the 4 bolts and the 2 fuel tank bands, and then remove the fuel tank.

cardiagn.com

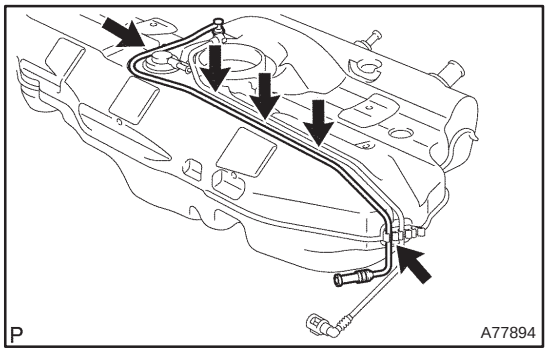

22. REMOVE FUEL TANK RETURN TUBE (1AZ–FSE ENGINE TYPE)

(a) Unfasten the 5 claws and remove the fuel tank return tube from the fuel tank.

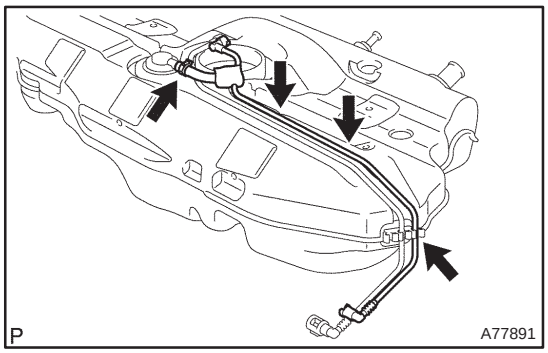

23. REMOVE FUEL EVAPORATION TUBE SUB–ASSY NO.2

(a) Unfasten the 4 claws and remove the fuel evaporation tube from the fuel tank.

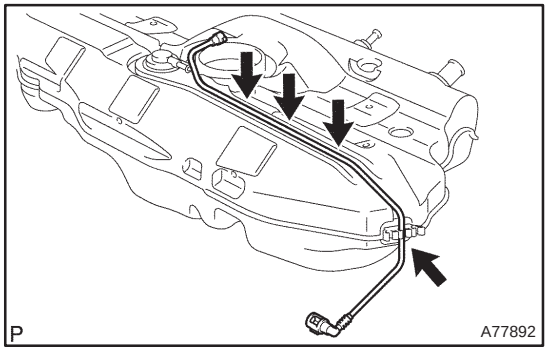

24. REMOVE FUEL TANK MAIN TUBE SUB–ASSY

(a) Unfasten the 4 claws and remove the fuel tank main tube from the fuel tank.

25. INSTALL FUEL TANK MAIN TUBE SUB–ASSY

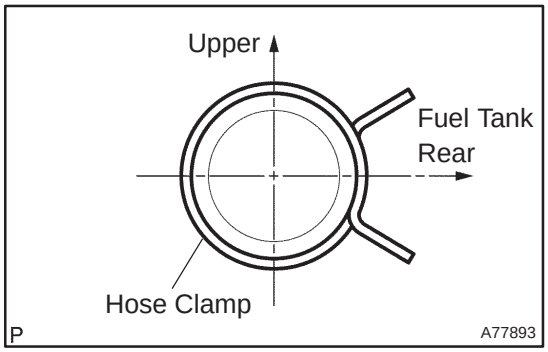

26. INSTALL FUEL EVAPORATION TUBE SUB–ASSY NO.2

(a) Install the hose clamp as shown in the illustration.

27. INSTALL FUEL TANK RETURN TUBE (1AZ–FSE ENGINE TYPE)

28. INSTALL FUEL TANK ASSY

Torque: 40 N·m (400 kgf·cm, 29 ft·lbf)

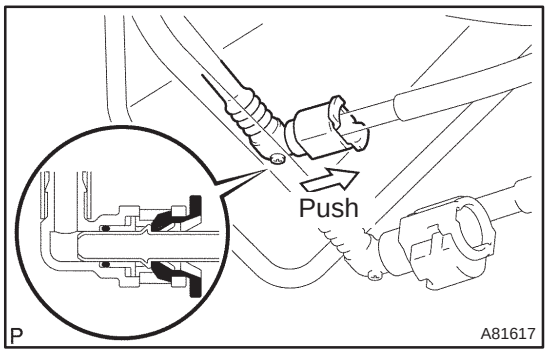

29. CONNECT FUEL EVAPORATION TUBE SUB–ASSY NO.2

(a) Push in the fuel tube connector to the pipe until it makes ”click” sound.

NOTICE:

- **Check if there is any damage or foreign objects on the connected part.**
- **After connecting, check if the fuel tube connector and the pipe are securely connected by pulling on them.**

cardiagn.com

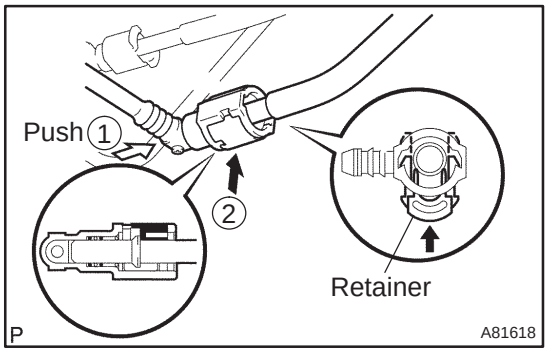

30. CONNECT FUEL TANK MAIN TUBE SUB–ASSY

(a) Push in the fuel tube connector to the pipe until it makes ”click” sound, and then push up the retainer to the claws lock.

NOTICE:

- **Check if there is any damage or foreign objects on the connected part.**
- **After connecting, check if the fuel tube connector and the pipe are securely connected by pulling on them.**

31. CONNECT FUEL TANK RETURN TUBE (1AZ–FSE ENGINE TYPE)

32. CONNECT FUEL TANK TO FILLER PIPE HOSE

33. CONNECT BREATHER TUBE FUEL HOSE

34. INSTALL PARKING BRAKE CABLE ASSY NO.3
Torque: 5.0 N·m (51 kgf·cm, 44 in.·lbf)

35. INSTALL PARKING BRAKE CABLE ASSY NO.2
Torque: 5.0 N·m (51 kgf·cm, 44 in.·lbf)

36. INSTALL FUEL TANK PROTECTOR NO.1
Torque: 5.4 N·m (55 kgf·cm, 48 in.·lbf)

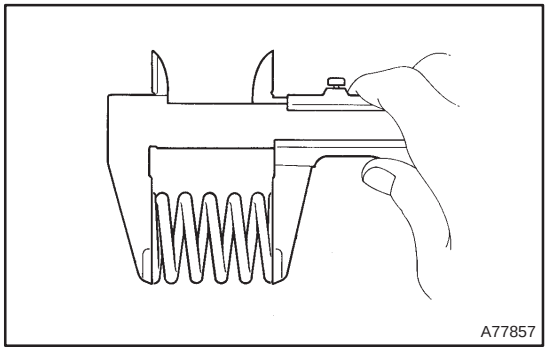

37. INSTALL EXHAUST PIPE ASSY CENTER (1ZZ–FE/3ZZ–FE ENGINE TYPE)

(a) Compression spring inspection

(1) Using vernier calipers, measure the free length of the compression spring.

Minimum length:
41.5 mm (1.634 in.) for front x manifold
38.5 mm (1.516 in.) for front x tail

If the free length is less than minimum, replace the compression spring.

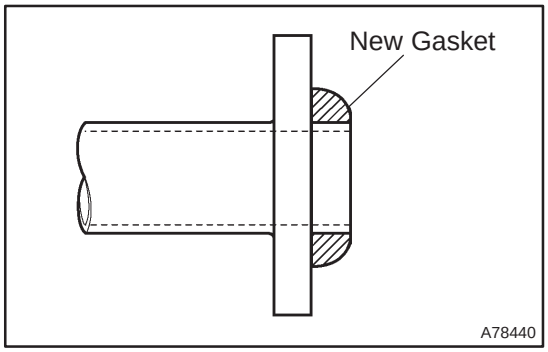

(b) Install each new gasket to the exhaust manifold and the exhaust pipe front as shown in the illustration.

(c) Install the exhaust pipe front to the 2 exhaust pipe supports

(d) Tighten the 4 compression springs and 4 bolts.
Torque: 43 N·m (440 kgf·cm, 32 ft·lbf)

(e) Install the grommet. (w/o HID Sensor)

(f) Connect the heated oxygen sensor connector.

(g) Install the floor carpet with the 2 clips. (w/o HID Sensor)

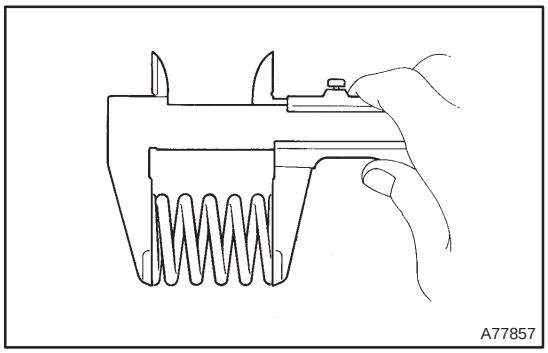

38. INSTALL EXHAUST PIPE ASSY CENTER (1AZ–FE/1AZ–FSE ENGINE TYPE)

(a) Compression spring inspection

(1) Using vernier calipers, measure the free length of the compression spring.

Minimum length: 38.5 mm (1.516 in.)

If the free length is less than minimum, replace the compression spring.

cardiagn.com

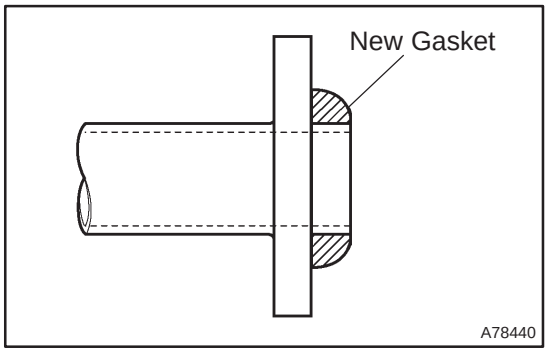

(b) Install a new gasket to the the exhaust pipe center (exhaust pipe tail side) as shown in the illustration.

(c) Install a new gasket (exhaust pipe front side) and the exhaust pipe center to the 2 exhaust pipe supports.

(d) Tighten the 2 compression springs and 4 bolts.
Torque: 43 N·m (440 kgf·cm, 32 ft·lbf)

39. ADD FUEL

40. INSTALL FUEL SUCTION W/PUMP & GAGE TUBE ASSY (See page 11–85)
SST 09808–14010

41. CONNECT FUEL EVAPORATION TUBE SUB–ASSY NO.2 (See page 11–85)

42. CONNECT FUEL TANK MAIN TUBE SUB–ASSY (See page 11–85)

43. CONNECT FUEL TANK RETURN TUBE (1AZ–FSE ENGINE TYPE) (See page 11–85)

44. CHECK FOR FUEL LEAKS

HINT:
- 1ZZ–FE/3ZZ–FE: 11–5
- 1AZ–FE: 11–19
- 1AZ–FSE: 11–33

45. CHECK FOR EXHAUST GAS LEAKS

46. INSTALL FLOOR PANEL BRACE FRONT (See page 15–2)

47. INSTALL REAR FLOOR SERVICE HOLE COVER

48. INSTALL REAR SEAT CUSHION ASSY (SEAT FIXED TYPE) (See page 72–32)

49. INSTALL FRONT FLOOR FOOTREST (W/O HID SENSOR)

cardiagn.com

INJECTION OR SUPPLY PUMP ASSY (1CD–FTV)

COMPONENTS

110U9–01

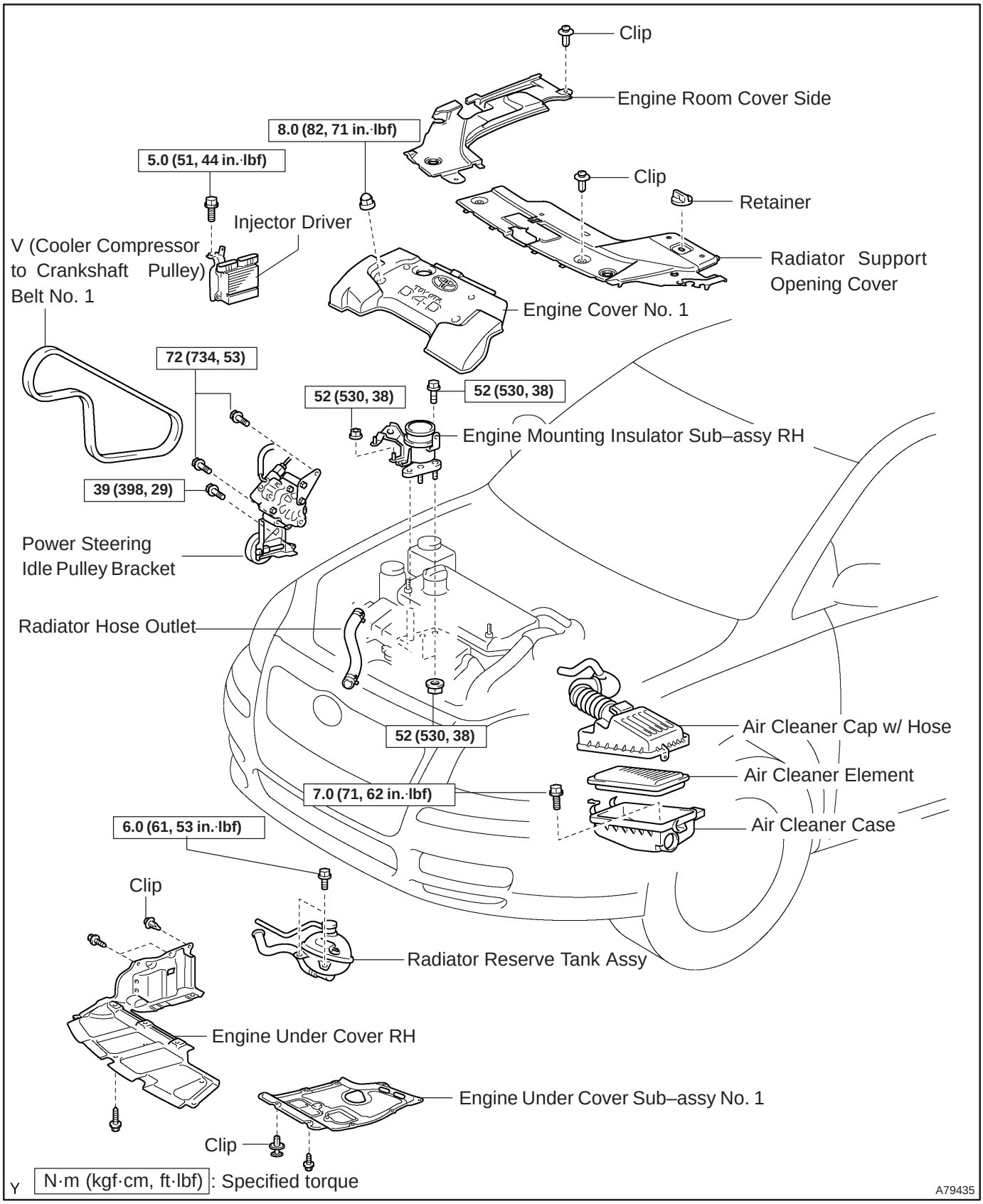

cardiagn.com

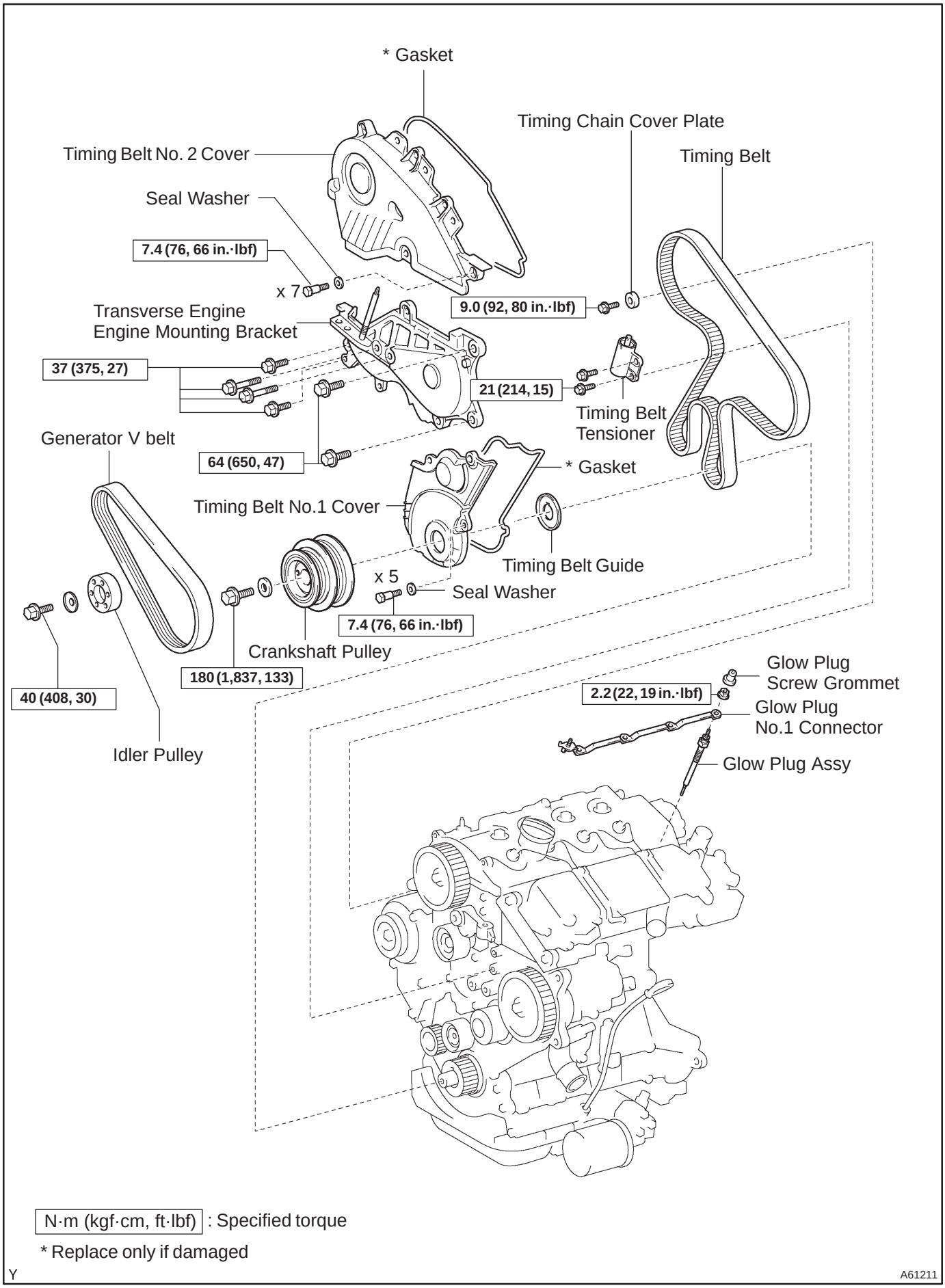

cardiagn.com

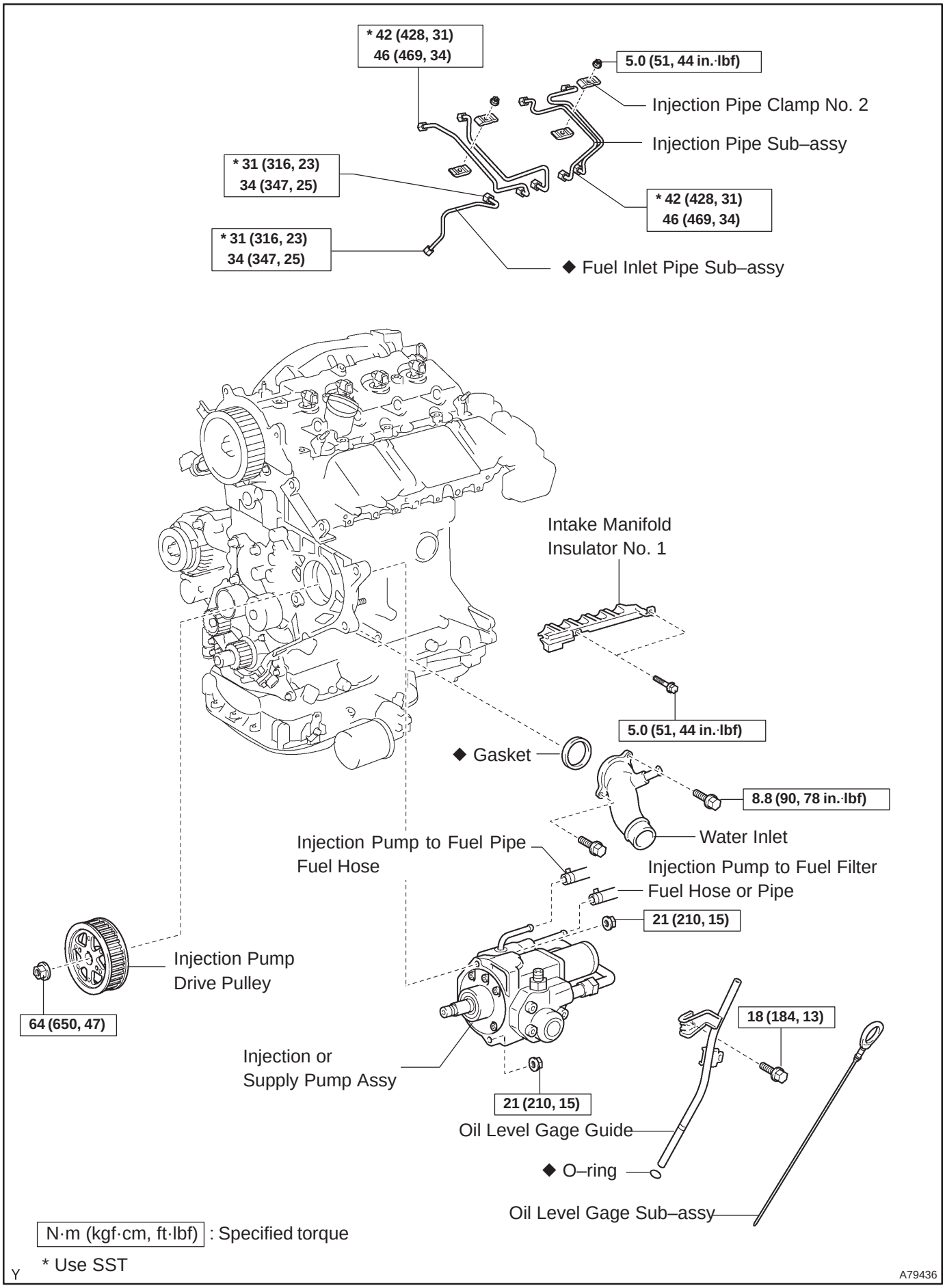

cardiagn.com

REPLACEMENT

1. REMOVE FRONT WHEEL RH

2. DRAIN ENGINE COOLANT (See page 16–44)

3. REMOVE ENGINE UNDER COVER SUB–ASSY NO.1

4. REMOVE ENGINE UNDER COVER RH

5. REMOVE RADIATOR SUPPORT OPENING COVER

6. REMOVE ENGINE ROOM COVER SIDE

7. REMOVE AIR CLEANER ASSY (See page 11–60)

8. REMOVE ENGINE COVER NO.1

(a) Remove the 5 nuts and the engine cover.

9. REMOVE RADIATOR RESERVE TANK ASSY (See page 16–50)

10. DISCONNECT RADIATOR HOSE OUTLET

(a) Disconnect the radiator hose outlet from the water inlet.

11. REMOVE V (COOLER COMPRESSOR TO CRANKSHAFT PULLEY) BELT NO.1 (See page 14–269)

12. REMOVE GENERATOR V BELT (See page 14–269)

13. REMOVE INJECTOR DRIVER

(a) Remove the 2 nuts which are used to secure the injector driver.

(b) Disconnect the injector driver connector and the harness clamp.

(c) Remove the injector driver.

14. REMOVE ENGINE MOUNTING INSULATOR SUB–ASSY RH (See page 14–307)

15. REMOVE CRANKSHAFT PULLEY (See page 14–307)

SST 09213–54015 (90105–08076), 09330–00021, 09950–50013 (09951–05010, 09952–05010, 09953–05020, 09954–05031)

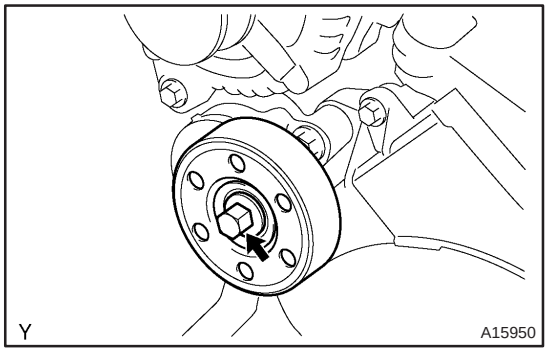

16. REMOVE IDLER PULLEY SUB–ASSY

(a) Remove the bolt and washer, then remove the idler pulley.

17. REMOVE TIMING BELT NO.2 COVER (See page 14–307)

18. REMOVE TIMING BELT NO.1 COVER (See page 14–307)

19. REMOVE TIMING BELT GUIDE

20. REMOVE TRANSVERSE ENGINE ENGINE MOUNTING BRACKET

(a) Remove the 6 bolts and the engine mounting bracket.

21. SET NO. 1 CYLINDER TO TDC/COMPRESSION (See page 14–307)

22. REMOVE TIMING CHAIN COVER PLATE (See page 14–307)

23. REMOVE TIMING BELT (See page 14–307)

cardiagn.com

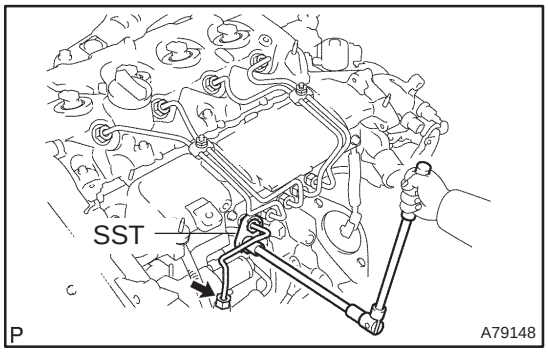

24. REMOVE FUEL INLET PIPE SUB–ASSY

NOTICE:

After removing the fuel inlet pipe, cover the common rail and injection pump with vinyl tape to prevent dust from being introduced.

(a) Remove the wire bracket and slide the engine wire.

(b) Using SST, remove the fuel inlet pipe from the common rail.
SST 09023–12700

(c) Using SST, remove the fuel inlet pipe from the injection pump.
SST 09023–12700

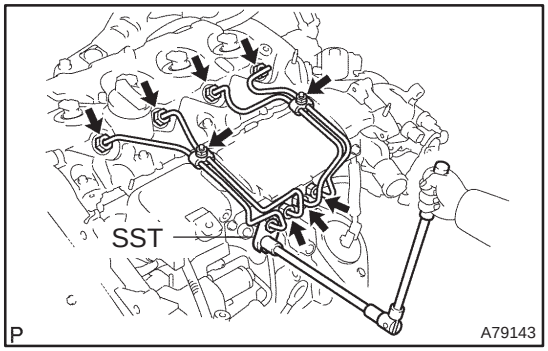

25. REMOVE INJECTION PIPE SUB–ASSY NO.1

(a) Remove the 2 nuts, then remove the 2 upper infection pipe clamps from the intake manifold.

(b) Using SST, remove the injection pipe from the common rail side.
SST 09023–12700

(c) Using SST, remove the injection pipe from the injector side.
SST 09023–12700

(d) After removing the fuel pipe, to prevent dust or foreign objects from being introduced, cover the common rail with vinyl tape and protect the injector inlet with a vinyl or a plastic bag.

26. REMOVE INJECTION PIPE SUB–ASSY NO.2
SST 09023–12700

HINT:
Perform the same procedures as injection pipe No. 1.

27. REMOVE INJECTION PIPE SUB–ASSY NO.3
SST 09023–12700

HINT:
Perform the same procedures as injection pipe No. 1.

28. REMOVE INJECTION PIPE SUB–ASSY NO.4
SST 09023–12700

HINT:
Perform the same procedures as injection pipe No. 1.

cardiagn.com

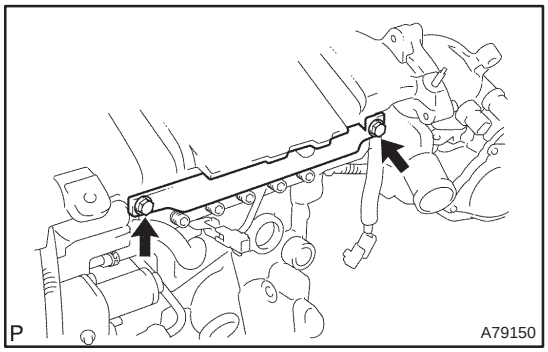

29. REMOVE INTAKE MANIFOLD INSULATOR NO.1

(a) Remove the 2 bolts and the intake manifold insulator.

30. REMOVE OIL LEVEL GAGE SUB–ASSY

31. REMOVE OIL LEVEL GAGE GUIDE (See page 17–22)

32. REMOVE WATER INLET (See page 16–50)

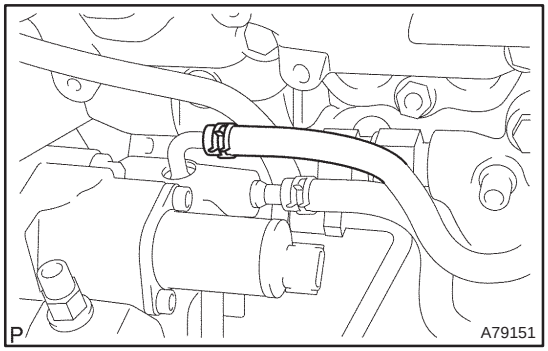

33. DISCONNECT INJECTION PUMP TO FUEL PIPE FUEL HOSE

(a) Disconnect the injection pump to fuel pipe fuel hose from the supply pump.

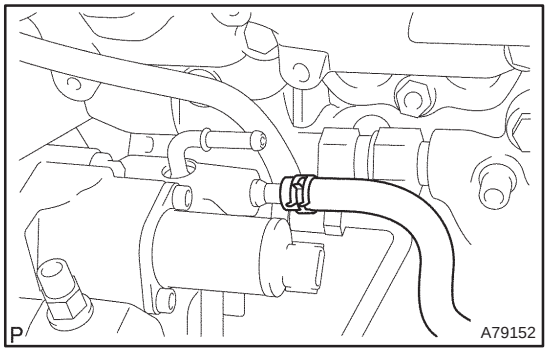

34. DISCONNECT INJECTION PUMP TO FUEL FILTER FUEL HOSE OR PIPE

(a) Disconnect the injection pump to fuel filter fuel hose or pipe from the supply pump.

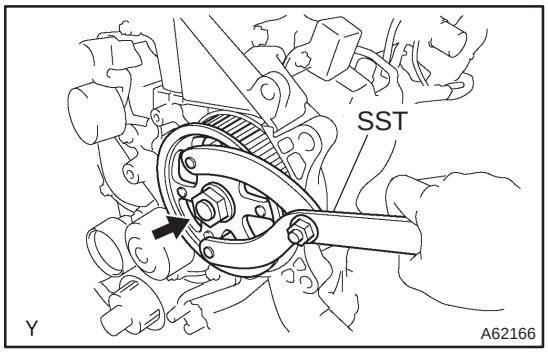

35. REMOVE INJECTION PUMP DRIVE PULLEY

(a) Using SST, remove the pulley nut.

SST 09960–10010 (09962–01000, 09963–01000)

cardiagn.com

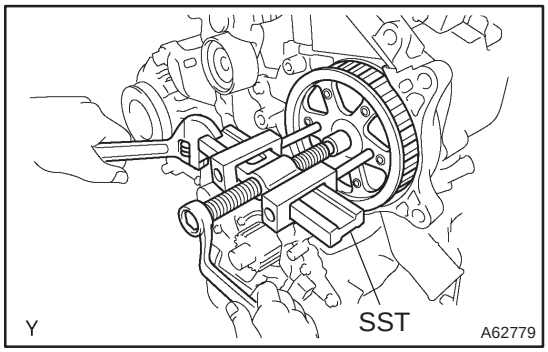

(b) Using SST, remove the injection pump drive pulley.
SST 09950–50013 (09951–05010, 09952–05010, 09953–05020, 09954–05021)

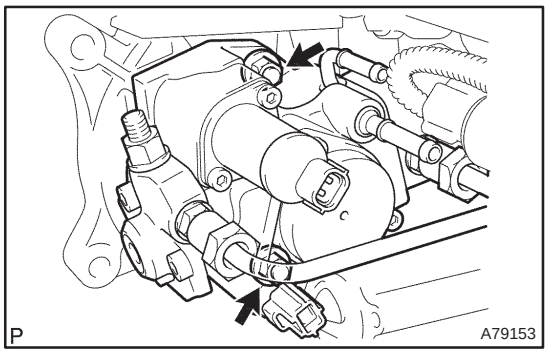

36. REMOVE INJECTION OR SUPPLY PUMP ASSY

(a) Remove the 2 nuts and the injection pump.

37. INSTALL INJECTION OR SUPPLY PUMP ASSY
Torque: 21 N·m (210 kgf·cm, 15 ft·lbf)

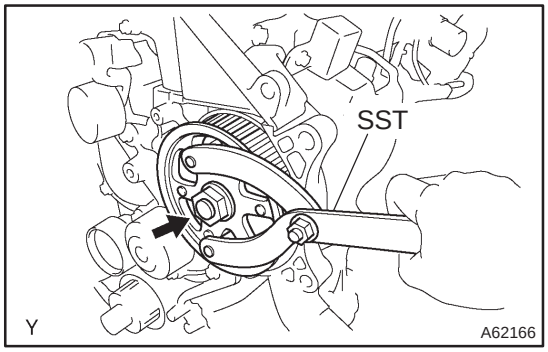

38. INSTALL INJECTION PUMP DRIVE PULLEY

(a) Using SST, install the pulley nut.
SST 09960–10010 (09962–01000, 09963–01000)
Torque: 64 N·m (650 kgf·cm, 47 ft·lbf)

39. INSTALL WATER INLET (See page 16–50)
40. INSTALL OIL LEVEL GAGE GUIDE (See page 17–22)
41. INSTALL INTAKE MANIFOLD INSULATOR NO.1
Torque: 5.0 N·m (51 kgf·cm, 44 in.·lbf)

42. INSTALL INJECTION PIPE SUB–ASSY NO.1

NOTICE:
When assembling the pipes, perform the operation with the engine cold under room temperature.

(a) Remove the vinyl or the plastic bag from the injector and vinyl tape from the common rail.
(b) Temporarily install the injection pipe.

cardiagn.com

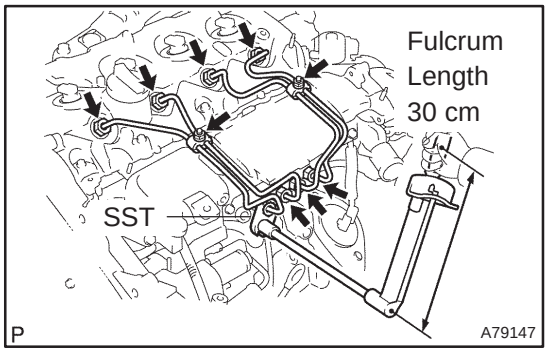

(c) Using SST, tighten the nut of the injection pipe to the common rail side.
SST 09023–12700
Torque:
42 N·m (428 kgf·cm, 31 ft·lbf) for a used pipe using SST
46 N·m (469 kgf·cm, 34 ft·lbf) for a used pipe not using SST
31 N·m (316 kgf·cm, 23 ft·lbf) for a new pipe using SST
34 N·m (347 kgf·cm, 25 ft·lbf) for a new pipe not using SST

HINT:
- Use a torque wrench with a fulcrum length of 30 cm (11.81 in.)
- Check if the used pipe has deflection or is installed properly after injection pipe is reassembled. If there is deflection or if it can not be installed properly, replace the used pipe with a new pipe.

(d) Using SST, tighten the nut of the injection pipe to the injector side.
SST 09023–12700
Torque:
42 N·m (428 kgf·cm, 31 ft·lbf) for a used pipe using SST
46 N·m (469 kgf·cm, 34 ft·lbf) for a used pipe not using SST
31 N·m (316 kgf·cm, 23 ft·lbf) for a new pipe using SST
34 N·m (347 kgf·cm, 25 ft·lbf) for a new pipe not using SST

HINT:
- Use a torque wrench with a fulcrum length of 30 cm (11.81 in.)
- Check if the used pipe has deflection or is installed properly after injection pipe is reassembled. If there is deflection or if it can not be installed properly, replace the used pipe with a new pipe.

(e) Install the 2 upper injection pipe clamps with the 2 nuts.
Torque: 5.0 N·m (51 kgf·cm, 44 in.·lbf)

43. INSTALL INJECTION PIPE SUB–ASSY NO.2
SST 09023–12700

HINT:
Perform the same procedures as injection pipe No. 1.

44. INSTALL INJECTION PIPE SUB–ASSY NO.3
SST 09023–12700

HINT:
Perform the same procedures as injection pipe No. 1.

45. INSTALL INJECTION PIPE SUB–ASSY NO.4
SST 09023–12700

HINT:
Perform the same procedures as injection pipe No. 1.

cardiagn.com

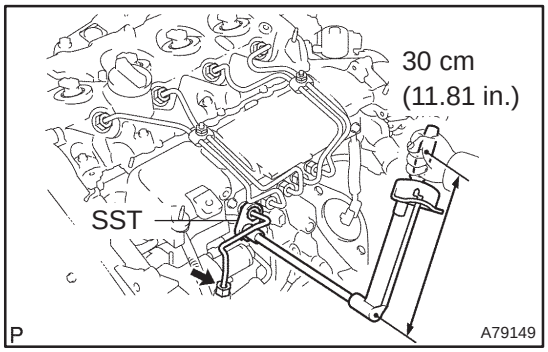

46. INSTALL FUEL INLET PIPE SUB–ASSY

NOTICE:

- **In case of having the injection pump replaced, must replace the fuel inlet pipe, too.**
- **When assembling the pipe, perform the operation with the engine cold under room temperature.**

(a) Temporarily install the fuel inlet pipe.

(b) Using SST, tighten the nut of the fuel inlet pipe to the common rail side.

SST 09023–12700

Torque:

42 N·m (428 kgf·cm, 31 ft·lbf) for a used pipe using SST
46 N·m (469 kgf·cm, 34 ft·lbf) for a used pipe not using SST
31 N·m (316 kgf·cm, 23 ft·lbf) for a new pipe using SST
34 N·m (347 kgf·cm, 25 ft·lbf) for a new pipe not using SST

HINT:

- Use a torque wrench with a fulcrum length of 30 cm (11.81 in.)
- Check if the used pipe has deflection or is installed properly after inlet pipe is reassembled. If there is deflection or if it can not be installed properly, replace the used pipe with a new pipe.

(c) Using SST, tighten the nut of the fuel inlet pipe to the injection pump side.

SST 09023–12700

Torque:

42 N·m (428 kgf·cm, 31 ft·lbf) for a used pipe using SST
46 N·m (469 kgf·cm, 34 ft·lbf) for a used pipe not using SST
31 N·m (316 kgf·cm, 23 ft·lbf) for a new pipe using SST
34 N·m (347 kgf·cm, 25 ft·lbf) for a new pipe not using SST

HINT:

- Use a torque wrench with a fulcrum length of 30 cm (11.81 in.)
- Check if the used pipe has deflection or is installed properly after inlet pipe is reassembled. If there is deflection or if it can not be installed properly, replace the used pipe with a new pipe.

47. SET NO. 1 CYLINDER TO TDC/COMPRESSION (See page 14–307)

SST 09960–10010 (09962–01000, 09963–01000)

48. INSTALL TIMING BELT (See page 14–307)

49. CHECK VALVE TIMING (See page 14–307)

50. INSTALL TIMING CHAIN COVER PLATE (See page 14–307)

51. INSTALL TRANSVERSE ENGINE ENGINE MOUNTING BRACKET

Torque:

37 N·m (375 kgf·cm, 27 ft·lbf) for 14mm head bolt
64 N·m (650 kgf·cm, 47 ft·lbf) for 17mm head bolt

cardiagn.com

52. **INSTALL TIMING BELT GUIDE (See page 14–307)**
53. **INSTALL TIMING BELT NO.1 COVER (See page 14–307)**
54. **INSTALL TIMING BELT NO.2 COVER (See page 14–307)**
55. **INSTALL IDLER PULLEY SUB–ASSY**
    Torque: 40 N·m (408 kgf·cm, 30 ft·lbf)
56. **INSTALL CRANKSHAFT PULLEY (See page 14–307)**
    SST 09213–54015 (90105–08076), 09330–00021
57. **INSTALL ENGINE MOUNTING INSULATOR SUB–ASSY RH (See page 14–307)**
58. **INSTALL INJECTOR DRIVER**
    Torque: 5.0 N·m (51 kgf·cm, 44 in.·lbf)
59. **ADJUST V (COOLER COMPRESSOR TO CRANKSHAFT PULLEY) BELT NO.1 (See page 14–269)**
60. **INSTALL RADIATOR RESERVE TANK ASSY (See page 16–50)**
61. **INSTALL ENGINE COVER NO.1**
    Torque: 8.0 N·m (82 kgf·cm, 71 in.·lbf)
62. **INSTALL AIR CLEANER ASSY (See page 11–60)**
63. **INSTALL FRONT WHEEL RH**
    Torque: 103 N·m (1,050 kgf·cm, 76 ft·lbf)
64. **ADD ENGINE COOLANT (See page 16–44)**
65. **CHECK FOR ENGINE COOLANT LEAKS (See page 16–37)**
66. **CHECK FOR FUEL LEAKS (See page 11–60)**

cardiagn.com

INJECTOR ASSY (1CD–FTV)

COMPONENTS

110U7–01

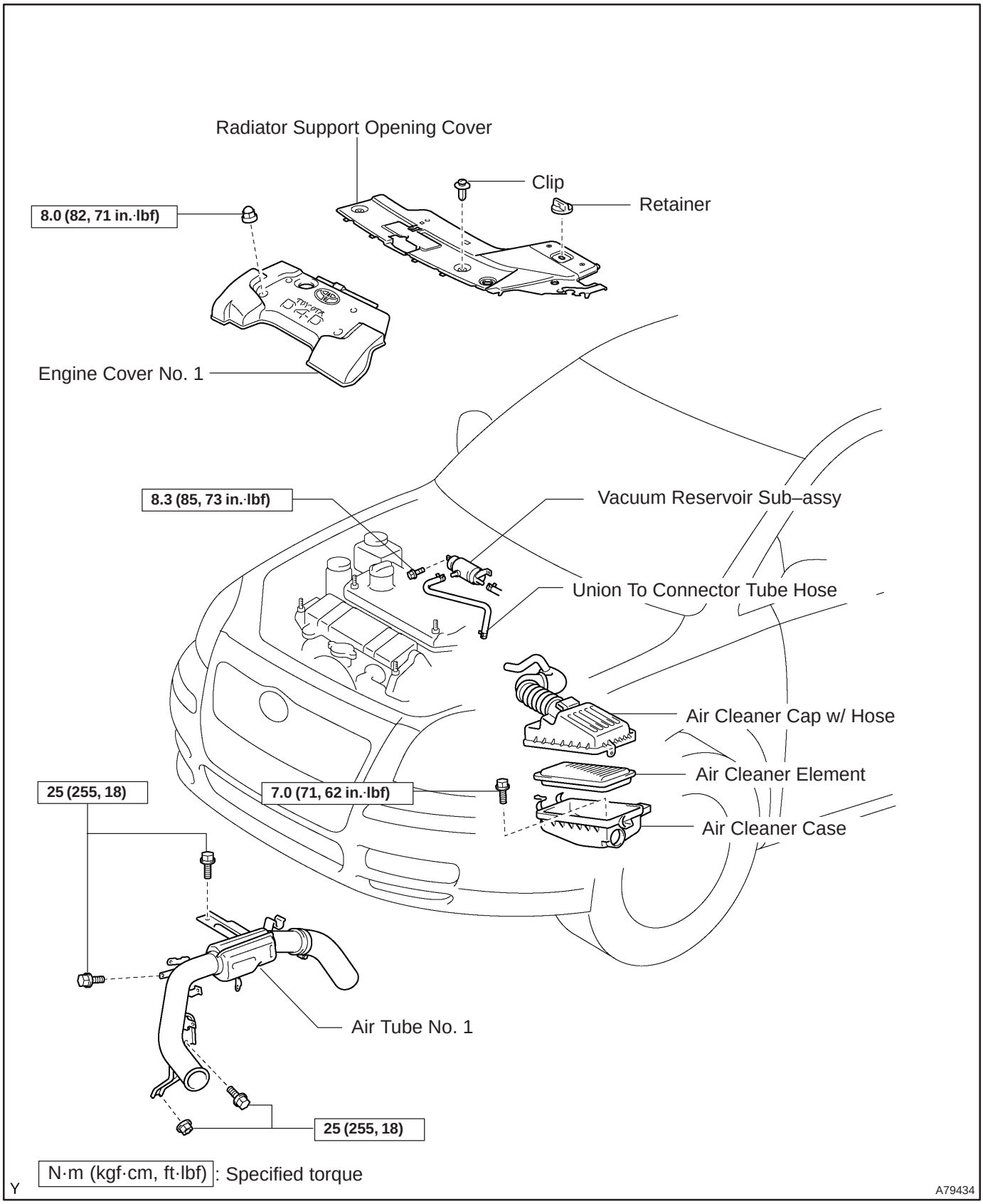

cardiagn.com

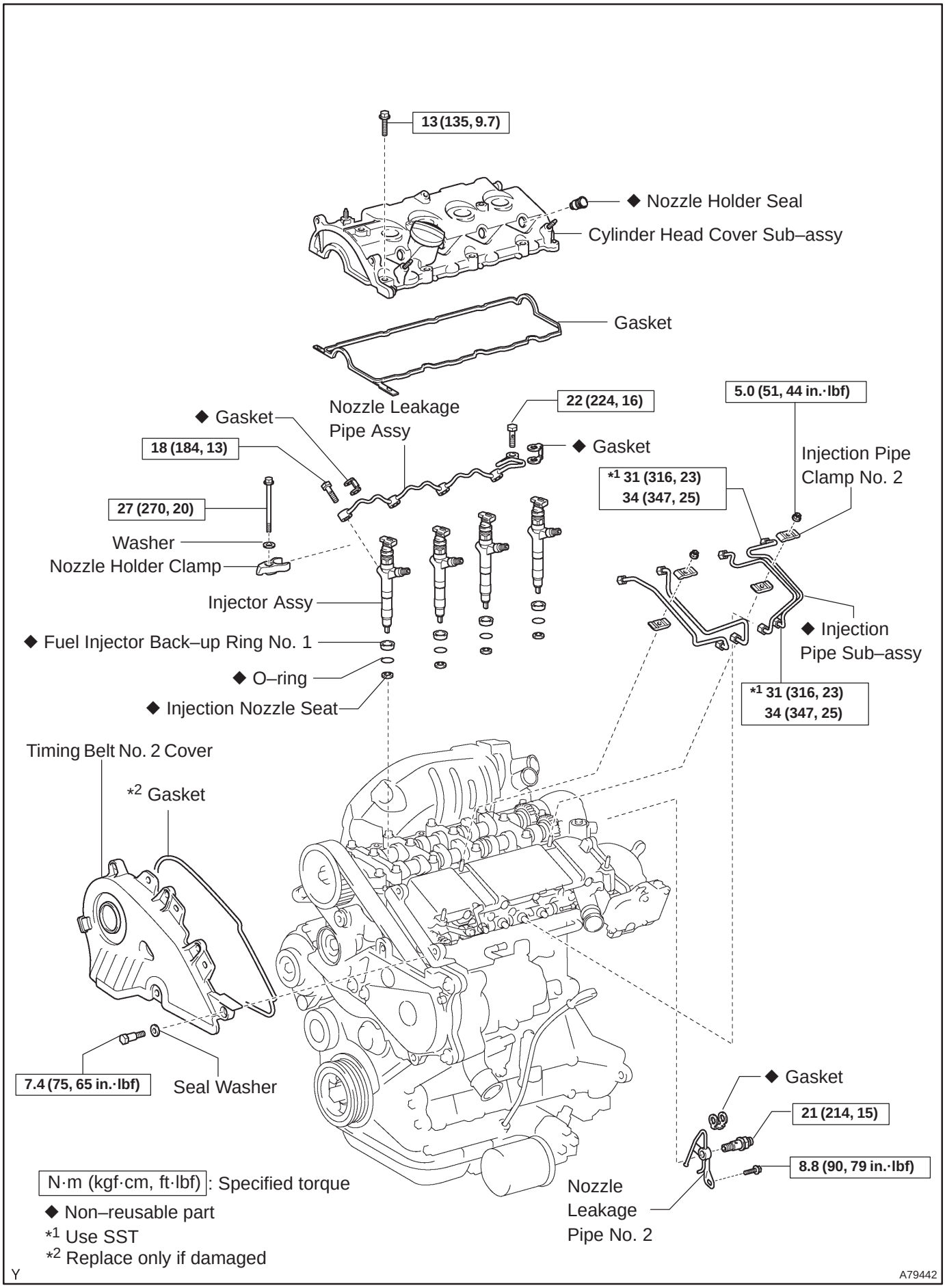

cardiagn.com

110U8–01

REPLACEMENT

HINT:

Each injector assembly has a characteristic fuel injecting behavior. The ECM stores compensation codes which are used to optimize fuel injection for the injectors. When replacing the injector assembly, a compensation code for the new injector assembly must be set to the ECM.

1. REMOVE VACUUM RESERVOIR SUB–ASSY

(a) Disconnect the 2 vacuum hoses and the connector.

(b) Remove the 2 bolts and the vacuum reservoir.

2. REMOVE RADIATOR SUPPORT OPENING COVER

3. REMOVE ENGINE COVER NO.1

(a) Remove the 5 nuts and the engine cover.

4. REMOVE AIR CLEANER ASSY

(a) Disconnect the connector.

(b) Remove the air cleaner cap with the air cleaner hose.

(c) Remove the air cleaner filter element.

(d) Remove the 3 bolts and the air cleaner case.

5. REMOVE AIR TUBE NO.1 (See page 14–270)

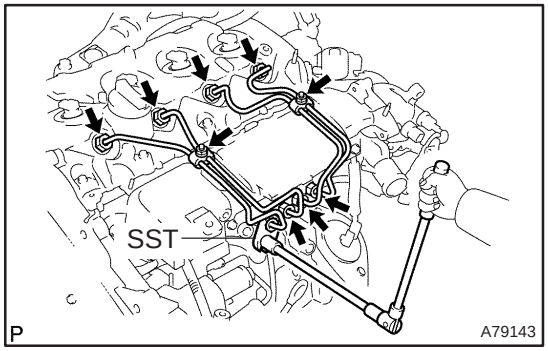

6. REMOVE INJECTION PIPE SUB–ASSY NO.1

(a) Remove the 2 nuts and 2 upper infection pipe clamps from the intake manifold.

(b) Using SST, remove the injection pipe from the common rail side.
SST 09023–12700

(c) Using SST, remove the injection pipe from the injector side.
SST 09023–12700

(d) After removing the fuel pipe, to prevent dust or foreign objects from being introduced, cover the common rail with vinyl tape and protect the injector inlet with a vinyl or plastic bag.

7. REMOVE INJECTION PIPE SUB–ASSY NO.2

SST 09023–12700

HINT:

Perform the same procedures as injection pipe No. 1.

8. REMOVE INJECTION PIPE SUB–ASSY NO.3

SST 09023–12700

HINT:

Perform the same procedures as injection pipe No. 1.

9. REMOVE INJECTION PIPE SUB–ASSY NO.4

SST 09023–12700

HINT:

Perform the same procedures as injection pipe No. 1.

10. REMOVE TIMING BELT NO.2 COVER

(a) Remove the 7 bolts and 7 seal washers, then remove the timing belt cover.

cardiagn.com

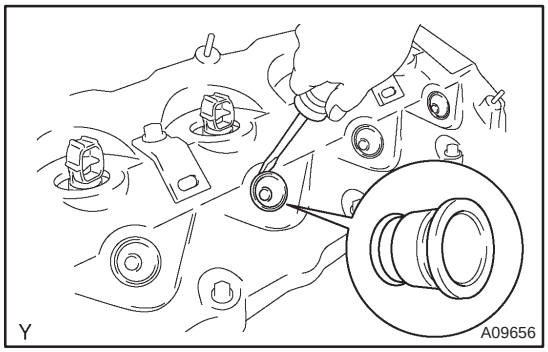

11. REMOVE NOZZLE HOLDER SEAL

(a) Using a screwdriver, pry out the 4 nozzle holder seals.

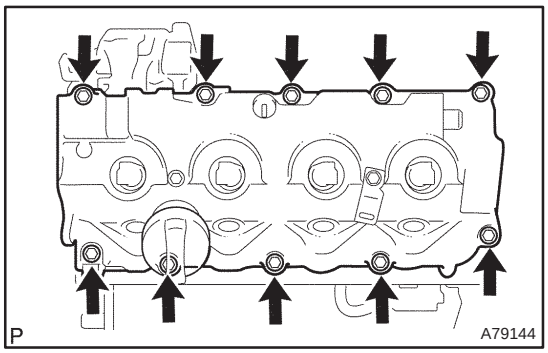

12. REMOVE CYLINDER HEAD COVER SUB–ASSY

(a) Remove the 10 bolts and the cylinder head cover.

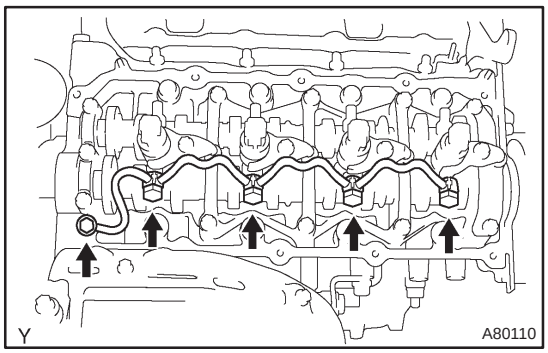

13. REMOVE NOZZLE LEAKAGE PIPE ASSY

(a) Remove the union bolt and the 4 hollow screws, then remove the nozzle leakage pipe and the 5 gaskets.

NOTICE:

When removing then nozzle leakage pipe, place the shop rag under the pipe to protect the cylinder head from the fuel remaining inside the pipe.

14. REMOVE NOZZLE HOLDER CLAMP

(a) Remove the 4 bolts, 4 washers and 4 nozzle holder clamps.

15. REMOVE INJECTOR ASSY

(a) Remove the 4 injectors from the cylinder head.

(b) Remove the O–rings and back–up rings from each injector.

(c) Remove the 4 nozzle seats from the cylinder head.

16. REGISTRATION OF INJECTOR COMPENSATION CODE (See page 05–528)

HINT:

Each injector assembly has a characteristic fuel injecting behavior. When replacing the injector assembly, store them in correct order so that they can be returned to the original locations when re–assembling.

17. INSTALL INJECTOR ASSY

(a) Install 4 new nozzle seats to the cylinder head.

cardiagn.com

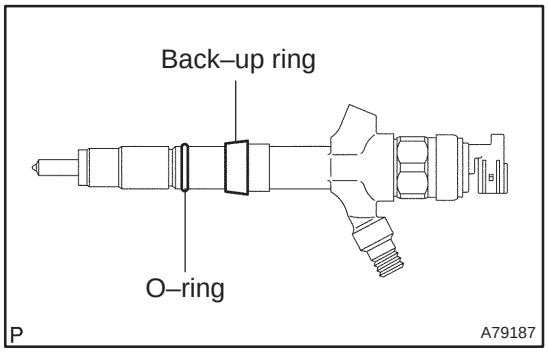

(b) Install new back–up rings and O–rings to each injector.
(c) Apply a light coat of engine oil onto the O–rings on each injector.
(d) Install the injector to the cylinder head.

NOTICE:
Fit the injectors to the nozzle seat.

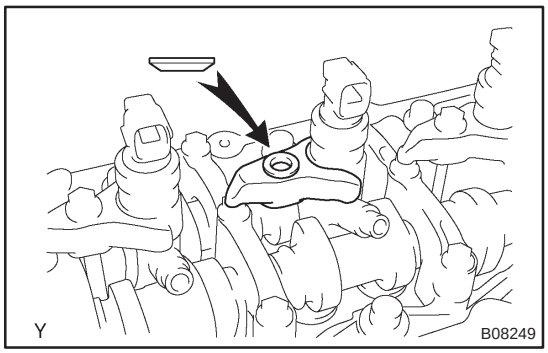

(e) Install the nozzle holder clamp as shown in the illustration. Tighten the camshaft bearing cap bolt by hand to fix the nozzle holder clamp.

NOTICE:
- **Pay attention to the mounting orientation of the washer.**
- **When temporarily attaching the nozzle holder clamp and the mounting bolt, be careful not to orient them at an angle.**

HINT:
Apply a light coat of engine oil on the threads of the nozzle holder clamp bolts.

(f) Install the injection pipe No. 1, No. 2, No. 3 and No. 4, tighten the nuts by hand.
(g) Install new 5 gaskets and the leakage pipe No. 1. Tighten the 4 hollow screws by hand.
(h) Tighten the 4 nozzle holder clamp bolts.
Torque: 26 N·m (265 kgf·cm, 19 ft·lbf)
(i) Remove the 4 injection pipes.

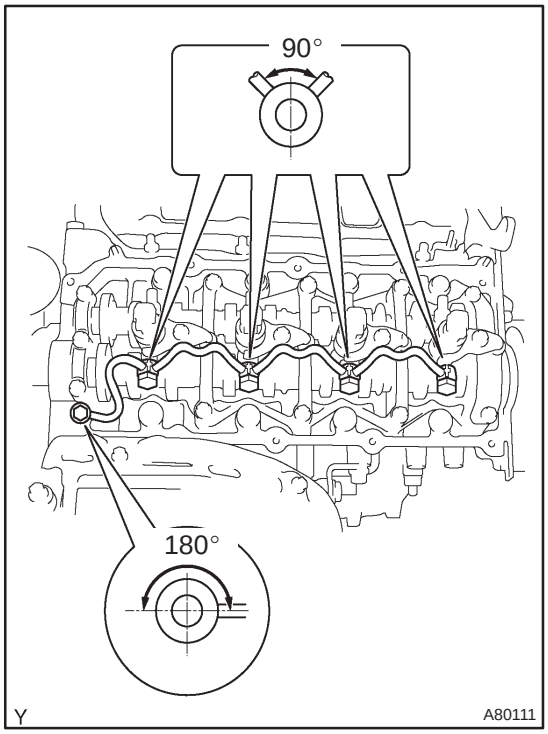

18. INSTALL NOZZLE LEAKAGE PIPE ASSY

(a) Install the nozzle leakage pipe and 5 new gaskets.

NOTICE:
When installing the gaskets, pay attention to the mounting orientation. Install the gasket so that the joint portion of the gasket comes within the ranges shown in the illustration.

(b) Apply a light coat of oil onto the 4 hollow screws and the union bolt.
(c) Tighten the 4 hollow screws and the union bolt by hand.
(d) Tighten the 4 hollow screws and the union bolt.
Torque:
18 N·m (184 kgf·cm, 13 ft·lbf) for hollow screw
22 N·m (224 kgf·cm, 16 ft·lbf) for union bolt
(e) Check that there are no leaks from the nozzle leakage pipe connection.
(1) Disconnect the fuel hose, and remove the bolt, the check valve and the nozzle leakage No. 2 pipe and the gasket.

cardiagn.com

(2) Install the bolt, the nozzle leakage No. 2 pipe and the gasket to the cylinder head with SST.

SST 09280–00010

Torque:
8.8 N·m (90 kgf·cm, 79 in.·lbf) for bolt
21 N·m (214 kgf·cm, 15 ft·lbf) for SST

(3) Apply a light coat of soapy water (any fluid to detect fuel leakage) on the nozzle leakage pipe No. 2 connection.

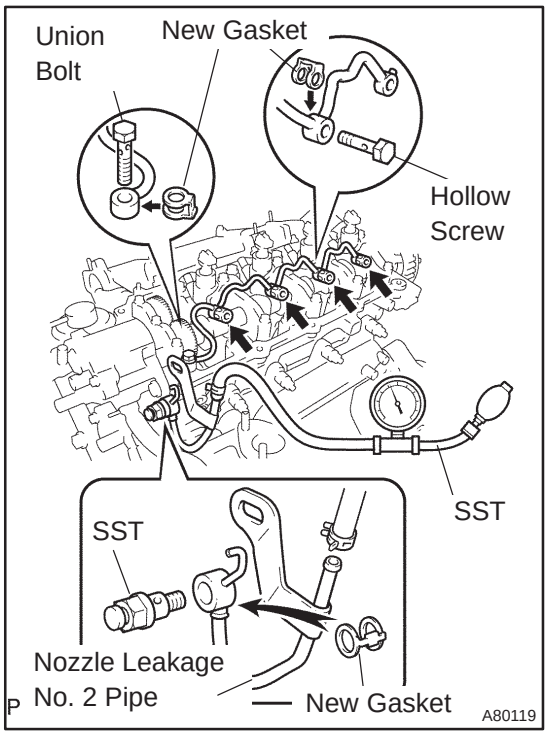

(4) Using SST (turbocharger pressure gauge), attach SST to the fuel return side of the nozzle leakage No. 2 pipe, and maintain 100 kPa (1.0 kgf/cm^2, 14.5 psi) of pressure for 60 seconds to check that there are no bubbles from the pipe connection.

SST 09992–00242

(5) After checking fuel leaks, wipe off soapy water from the pipe connection.

(6) Remove 2 SSTs, and then remove the bolt, the nozzle leakage No.2 pipe and the gasket.

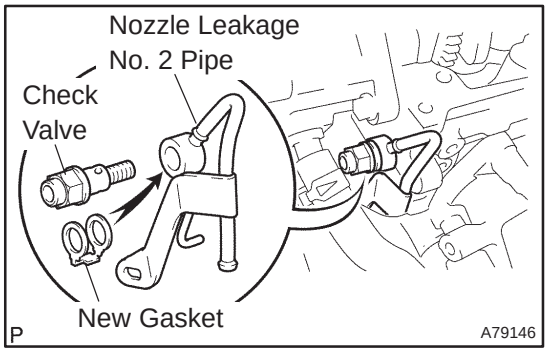

(7) Place a new gasket and reinstall the nozzle leakage No. 2 pipe with the check valve and the bolt.

Torque:
8.8 N·m (90 kgf·cm, 79 in.·lbf) for bolt
21 N·m (214 kgf·cm, 15 ft·lbf) for check valve

HINT:
Do not disassemble the check valve on the engine.

(8) Reconnect the fuel hose to the nozzle leakage No. 2 pipe.

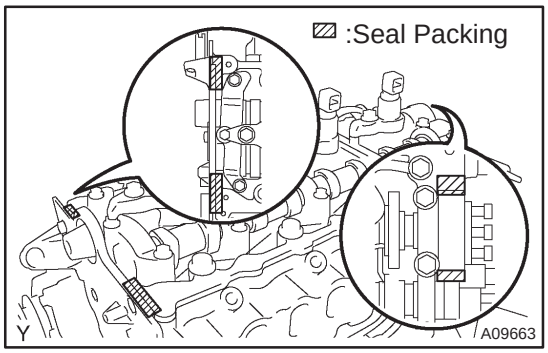

19. INSTALL CYLINDER HEAD COVER SUB–ASSY

(a) Remove any old packing (FIPG) material.

(b) Apply seal packing to the cylinder head.
Seal packing: Part No. 08826–00080 or equivalent

(c) Install the gasket to the cylinder head cover.

(d) Install the cylinder head cover with the 10 bolts.
Torque: 13 N·m (135 kgf·cm, 9.7 ft·lbf)

cardiagn.com

20. INSTALL NOZZLE HOLDER SEAL

(a) Install new 4 nozzle holder seals.

21. INSTALL TIMING BELT NO.2 COVER (See page 14–307)

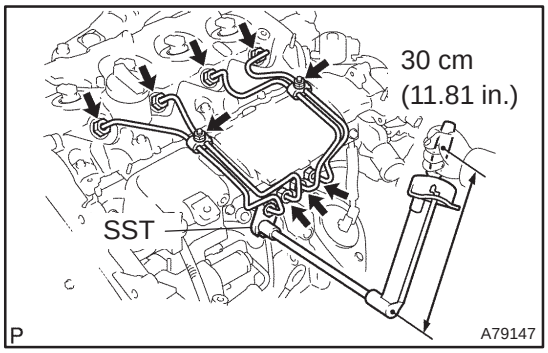

22. INSTALL INJECTION PIPE SUB–ASSY NO.1

NOTICE:

- **In case of having the injectors replaced, must replace the injection pipes, too.**
- **When assembling the pipes, perform the operation with the engine cold under room temperature.**

(a) Remove the vinyl or the plastic bag from the injector and vinyl tape from the common rail.

(b) Temporarily install the injection pipe.

(c) Using SST, tighten the nut of the injection pipe to the common rail.

SST 09023–12700

Torque:

42 N·m (428 kgf·cm, 31 ft·lbf) for a used pipe using SST
46 N·m (469 kgf·cm, 34 ft·lbf) for a used pipe not using SST
31 N·m (316 kgf·cm, 23 ft·lbf) for a new pipe using SST
34 N·m (347 kgf·cm, 25 ft·lbf) for a new pipe not using SST

HINT:

- Use a torque wrench with a fulcrum length of 30 cm (11.81 in.)
- Check if the used pipe has deflection or is installed properly after injection pipe is reassembled. If there is deflection or if it can not be installed properly, replace the used pipe with a new pipe.

(d) Using SST, tighten the nut of the injection pipe to the injector.

SST 09023–12700

Torque:

42 N·m (428 kgf·cm, 31 ft·lbf) for a used pipe using SST
46 N·m (469 kgf·cm, 34 ft·lbf) for a used pipe not using SST
31 N·m (316 kgf·cm, 23 ft·lbf) for a new pipe using SST
34 N·m (347 kgf·cm, 25 ft·lbf) for a new pipe not using SST

HINT:

- Use a torque wrench with a fulcrum length of 30 cm (11.81 in.)
- Check if the used pipe has deflection or is installed properly after injection pipe is reassembled. If there is deflection or if it can not be installed properly, replace the used pipe with a new pipe.

(e) Install the 2 upper injection pipe clamps with the 2 nuts.

Torque: 5.0 N·m (51 kgf·cm, 44 in.·lbf)

cardiagn.com

23. INSTALL INJECTION PIPE SUB–ASSY NO.2
SST 09023–12700

HINT:
Perform the same procedures as injection pipe No. 1.

24. INSTALL INJECTION PIPE SUB–ASSY NO.3
SST 09023–12700

HINT:
Perform the same procedures as injection pipe No. 1.

25. INSTALL INJECTION PIPE SUB–ASSY NO.4
SST 09023–12700

HINT:
Perform the same procedures as injection pipe No. 1.

26. INSTALL AIR TUBE NO.1 (See page 14–270)

27. INSTALL AIR CLEANER ASSY
Torque: 7.0 N·m (71 kgf·cm, 62 in.·lbf)

28. INSTALL ENGINE COVER NO.1
Torque: 8.0 N·m (82 kgf·cm, 71 in.·lbf)

29. INSTALL VACUUM RESERVOIR SUB–ASSY
Torque: 8.3 N·m (85 kgf·cm, 74 in.·lbf)

30. CHECK FOR FUEL LEAKS

NOTICE:
Under ACTIVE TEST mode, fuel pressure increases. Take precautions to prevent fuel from spraying on you or inside the engine compartment.

HINT:
During ACTIVE TEST mode, engine speed goes high and combustion noise becomes loud.

(a) Check that there are no fuel leaks from any part of the fuel system at the engine stops.

HINT:
If fuel leakage could be found on specific parts, replace them with new parts.

(b) While cranking or when starting the engine, check that there is no leaks from any part of the fuel system.

HINT:
If fuel leakage could be found on specific parts, replace them with new parts.

(c) Disconnect the fuel hose from the common rail.

(d) While cranking the engine, check fuel leaks from the return pipe.

HINT:
If there is fuel leakage, replace the common rail.

(e) Connect the hand–held tester to the DLC3.

(f) Start the engine and push the hand–held tester main switch ON.

(g) Select the FUEL LEAK test of ACTIVE TEST mode on the hand–held tester.

(h) If you do not have the hand–held tester, depress the accelerator pedal quickly and fully to increase the engine speed at maximum and keep it for 2 seconds. Repeat this operation several times.

(i) Check that there are no leaks from any part of the fuel system.

NOTICE:
If the leakage from the return pipe is less than 10 cc (0.6 cu in.) in a minute, it is acceptable.

HINT:
If fuel leakage could be found on specific parts, replace them with new parts.

(j) Reconnect the fuel hose to the common rail.

cardiagn.com