BRAKE ACTUATOR ASSY (W/ VSC)

320VW–01

ON–VEHICLE INSPECTION

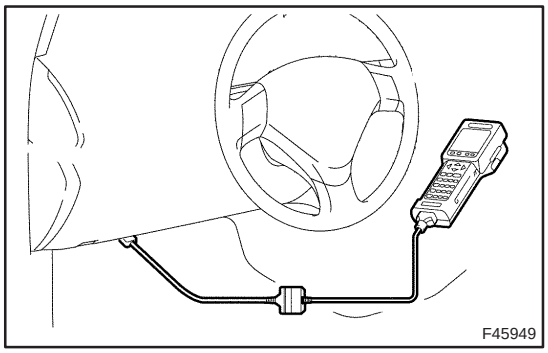

1. CONNECT HAND–HELD TESTER:

(a) Connect the hand–held tester to the DLC3.

(b) Start the engine and run at idle.

(c) Select the ACTIVE TEST mode on the hand–held tester.

HINT:

Please refer to the hand–held tester operator's manual for further details.

2. INSPECT ACTUATOR MOTOR OPERATION

(a) With the motor relay on, check the actuator motor operation noise.

(b) Turn the motor relay off.

(c) Depress the brake pedal and hold it for about 15 seconds. Check that the brake pedal cannot be depressed.

(d) With the motor relay on, check that the pedal does not pulsate.

NOTICE:

Do not keep a motor relay tvrned on for more than 5 seconds continuously. When operating it continuously, set an interval more than 20 seconds.

(e) Turn the motor relay off and release the brake pedal.

3. INSPECT RIGHT FRONT WHEEL OPERATION

NOTICE:

Never turn on a solenoid in a manner described below.

(a) With the brake pedal depressed, perform the following operations.

(b) Turn the SFRH and SFRR solenoid on simultaneously, and check that the pedal cannot be depressed.

NOTICE:

Do not keep a solenoids tvrned on for more than 5 seconds continuously. When operating it continuously, set an interval more than 20 seconds.

(c) Turn the SFRH and SFRR solenoid off simultaneously, and check that the pedal can be depressed.

(d) Turn the motor relay on, and check that the pedal returns.

NOTICE:

Do not keep a motor relay tvrned on for more than 5 seconds continuously. When operating it continuously, set an interval more than 20 seconds.

(e) Turn the motor relay off and release the brake pedal.

4. INSPECT OTHER WHEEL OPERATION

(a) Using the same procedure, check the solenoids of the other wheels.

HINT:

Left front wheel: SFLH, SFLR

Right rear wheel: SRRH, SRRR

Left rear wheel: SRLH, SRLR

cardiagn.com

BRAKE ACTUATOR ASSY (W/O VSC)

320VY–01

ON–VEHICLE INSPECTION

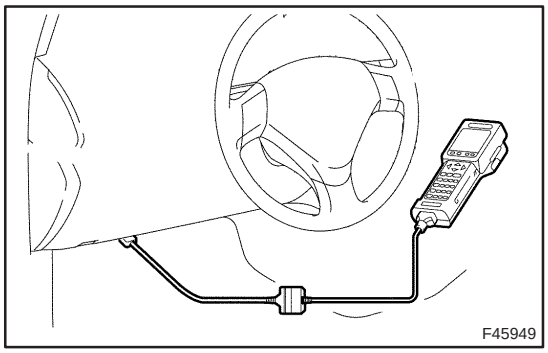

1. CONNECT HAND–HELD TESTER:

(a) Connect the hand–held tester to the DLC3.

(b) Start the engine and run at idle.

(c) Select the ACTIVE TEST mode on the hand–held tester.

HINT:

Please refer to the hand–held tester operator's manual for further details.

2. INSPECT ACTUATOR MOTOR OPERATION

(a) With the motor relay on, check the actuator motor operation noise.

(b) Turn the motor relay off.

(c) Depress the brake pedal and hold it for about 15 seconds. Check that the brake pedal cannot be depressed.

(d) With the motor relay on, check that the pedal does not pulsate.

NOTICE:

Do not keep a motor relay tvrned on for more than 5 seconds continuously. When operating it continuously, set an interval more than 20 seconds.

(e) Turn the motor relay off and release the brake pedal.

3. INSPECT RIGHT FRONT WHEEL OPERATION

NOTICE:

Never turn on a solenoid in a manner described below.

(a) With the brake pedal depressed, perform the following operations.

(b) Turn the SFRH and SFRR solenoid on simultaneously, and check that the pedal cannot be depressed.

NOTICE:

Do not keep a solenoids tvrned on for more than 5 seconds continuously. When operating it continuously, set an interval more than 20 seconds.

(c) Turn the SFRH and SFRR solenoid off simultaneously, and check that the pedal can be depressed.

(d) Turn the motor relay on, and check that the pedal returns.

NOTICE:

Do not keep a motor relay tvrned on for more than 5 seconds continuously. When operating it continuously, set an interval more than 20 seconds.

(e) Turn the motor relay off and release the brake pedal.

4. INSPECT OTHER WHEEL OPERATION

(a) Using the same procedure, check the solenoids of the other wheels.

HINT:

Left front wheel: SFLH, SFLR

Right rear wheel: SRRH, SRRR

Left rear wheel: SRLH, SRLR

cardiagn.com

REPLACEMENT

1. DRAIN BRAKE FLUID

NOTICE:

Wash the brake fluid off immediately if it adheres to any painted surfaces.

2. REMOVE FRONT WHEEL RH

3. REMOVE FRONT FENDER LINER RH

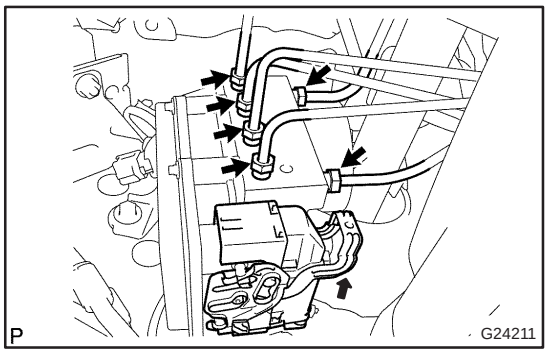

4. REMOVE BRAKE ACTUATOR WITH BRACKET

(a) Release the latch of the brake actuator connector to disconnect the connector.

(b) Using SST, disconnect the brake tubes from the brake actuator.
SST 09023–00100

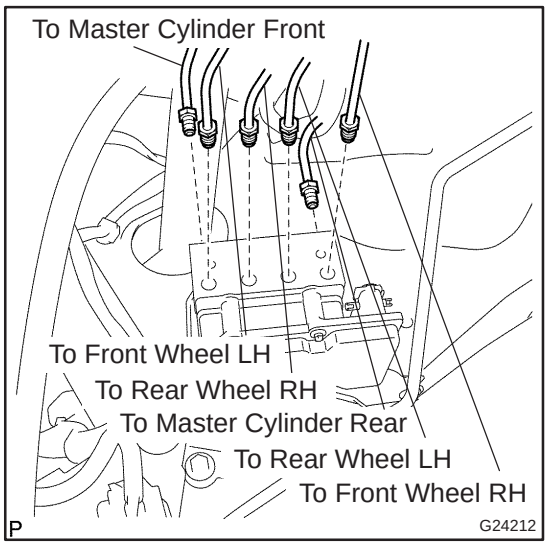

(c) Use tags or make a memo to identify the place to reconnect.

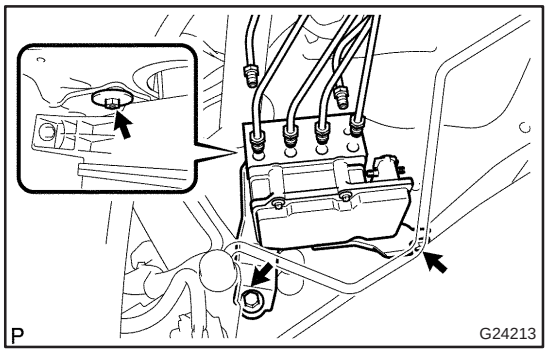

(d) Remove the nut, 2 bolts and brake actuator with bracket.

cardiagn.com

5. REMOVE BRAKE ACTUATOR ASSY

(a) Remove the 2 nuts and brake actuator from the brake acutuator bracket.

6. REMOVE SKID CONTROL ECU

(a) Disconnect the connector from the skid control ECU.

(b) Using a torx driver (T20), remove the 4 screws and the skid control ECU from the brake actuator.

7. INSTALL SKID CONTROL ECU

(a) Install the skid control ECU and 4 screws with a torx driver (T20).

(b) Connect the connector to the skid control ECU.

8. INSTALL BRAKE ACTUATOR ASSY

(a) Install the brake actuator with the 2 nuts to the brake actuator bracket.
Torque: 7.0 N·m (71 kgf·cm, 62 in.·lbf)

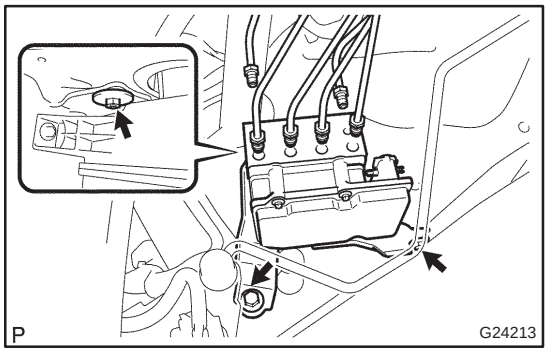

9. INSTALL BRAKE ACTUATOR WITH BRACKET

(a) Install the brake actuator with bracket with the nut and 2 bolts.
Torque: 19 N·m (194 kgf·cm, 14 ft·lbf)

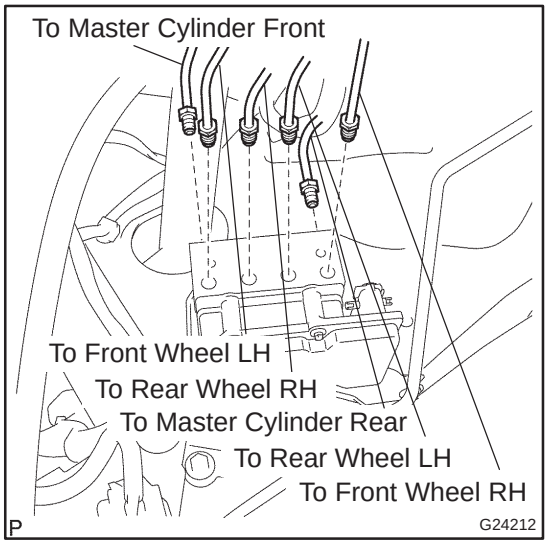

(b) Using SST, connect each brake line to the correct position of the brake actuator, as shown in the illustration.
SST 09023–00100
Torque:
A: 15 N·m (155 kgf·cm, 11 ft·lbf)

(c) Connect the brake actuator connector.

10. INSTALL FRONT FENDER LINER RH

11. INSTALL FRONT WHEEL RH
Torque: 103 N·m (1,050 kgf·cm, 76 ft·lbf)

12. FILL RESERVOIR WITH BRAKE FLUID (See page 32–4)

13. BLEED MASTER CYLINDER (See page 32–4)
SST 09023–00100

14. BLEED BRAKE LINE (See page 32–4)

15. CHECK FLUID LEVEL IN RESERVOIR (See page 32–4)

16. CHECK BRAKE FLUID LEAKAGE

17. CHECK BRAKE ACTUATOR WITH HAND–HELD TESTER (See page 05–699)

cardiagn.com

BRAKE BOOSTER ASSY (LHD)

ON–VEHICLE INSPECTION

3201G–07

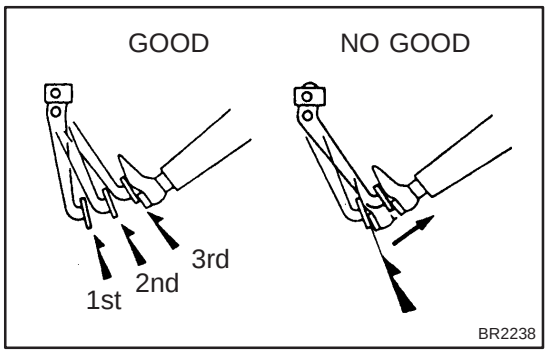

1. INSPECT BRAKE BOOSTER

(a) Airtightness check.

(1) Start the engine and stop it after 1 or 2 minutes. Depress the brake pedal several times slowly.

HINT:

If the pedal can be depressed to the f;oor the first time, but on the 2nd or 3rd time cannot be depreesed as far, the booster is airtight.

(2) Depress the brake pedal while the engine is running, and stop the engine with the pedal depressed.

HINT:

If there is no change in the pedal reserve distance after holding the pedal for 30 seconds, the booster is airtight.

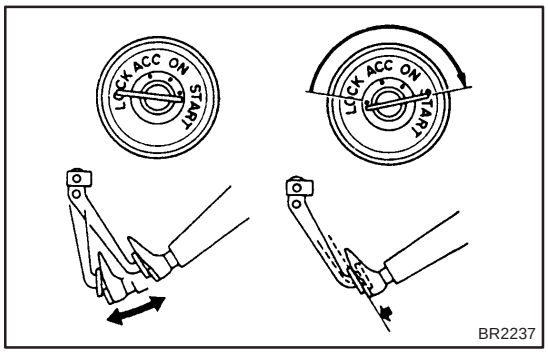

(b) Operating check.

(1) Depress the brake pedal several times with the ignition switch off and check that there is no change in the pedal reserve distance.

(2) Depress the brake pedal and start the engine.

HINT:

If the pedal goes down slightly, operation is normal.

2. INSPECT VACUUM CHECK VALVE

(a) Inspect vacuum check valve.

(1) Slide the clip and disconnect the vacuum hose.

(2) Remove the vacuum check valve.

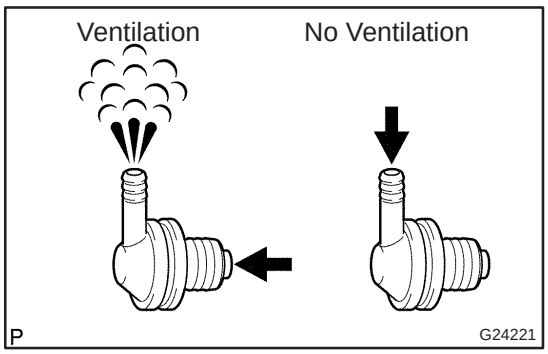

(3) Check that there is ventilation from the booster to the engine, and no ventilation from the engine to the booster.

(4) If any fault is found, replace the vacuum check valve.

cardiagn.com

320VU–01

COMPONENTS

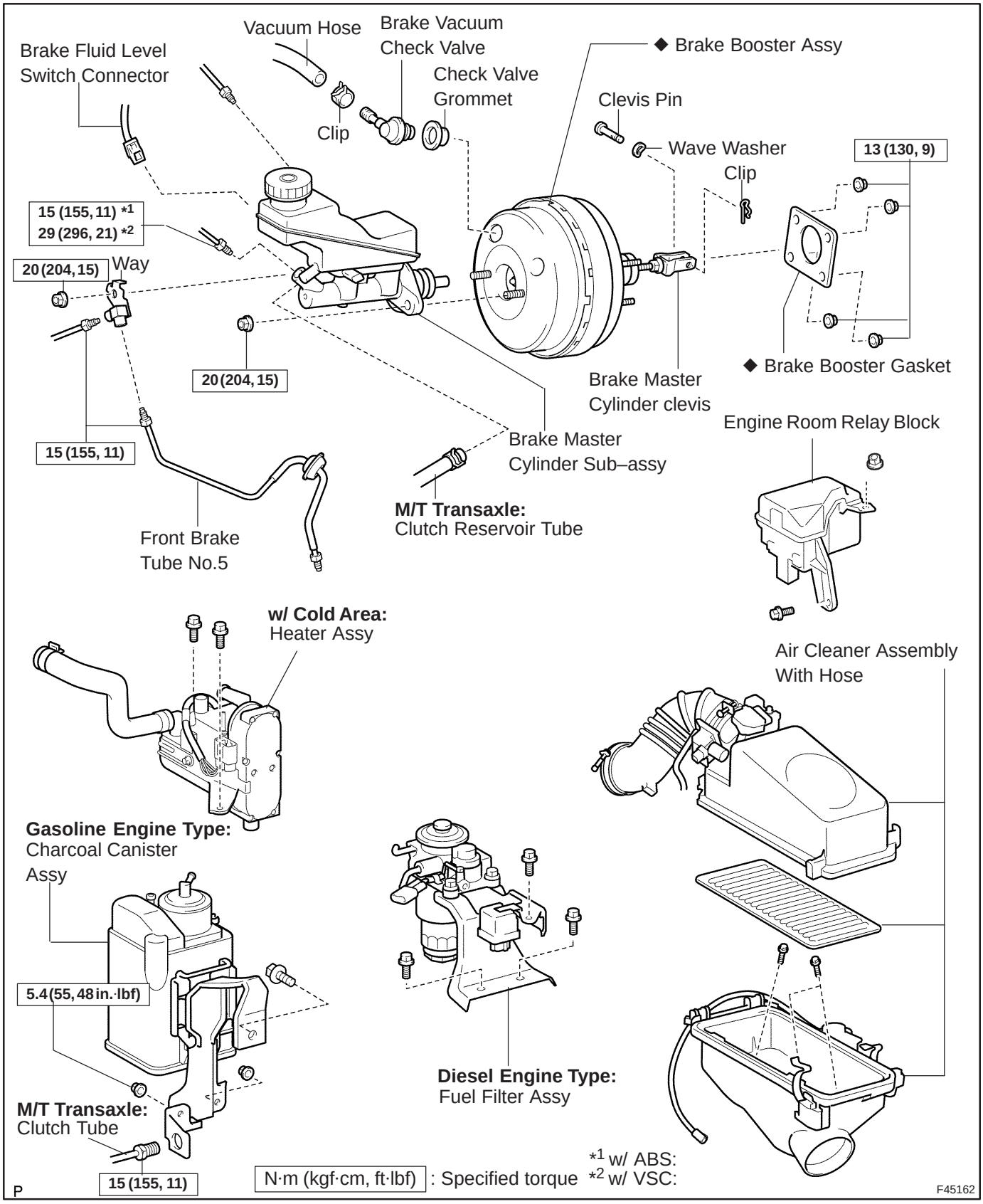

cardiagn.com

320W7–01

REPLACEMENT

NOTICE:

Do not adjust the brake booster push rod.

1. DRAIN BRAKE FLUID

NOTICE:

Wash the brake fluid off immediately if it adheres to any painted surface.

2. REMOVE AIR CLEANER ASSEMBLY WITH HOSE

3. SEPARATE ENGINE ROOM RELAY BLOCK

4. REMOVE CHARCOAL CANISTER ASSY (GASOLINE ENGINE TYPE)

5. REMOVE FUEL FILTER ASSY (DIESEL ENGINE TYPE) (See page 11–82)

6. REMOVE BRAKE MASTER CYLINDER SUB–ASSY (See page 32–13)

(a) w/o VSC:
SST 09023–00100

(b) w/ VSC:
SST 09023–38400

7. REMOVE HEATER ASSY (W/ COLD AREA) (See page 55–100)

8. REMOVE FRONT WHEEL LH

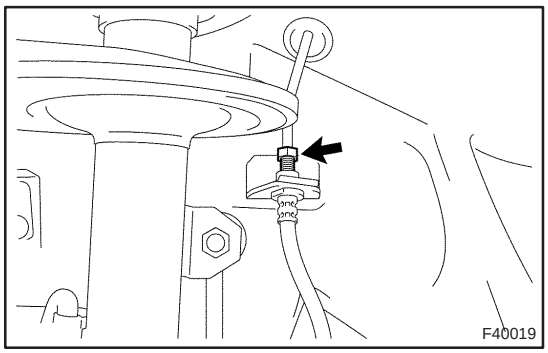

9. DISCONNECT FRONT BRAKE TUBE NO.5

(a) Using SST and spanner, disconnect the brake line from the flexible hose of the front brake LH.
SST 09023–00100

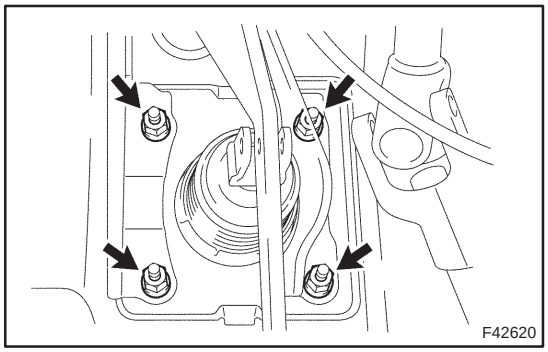

10. REMOVE BRAKE BOOSTER ASSY

(a) Disconnect the vacuum hose from the brake booster assy.

(b) Remove the clip and clevis pin.

(c) Remove the 4 nuts.

(d) Pull out the brake booster assy.

11. REMOVE BRAKE BOOSTER GASKET

(a) Pull out the brake booster gasket from the brake booster assy.

12. REMOVE CHECK VALVE

(a) Remove the check valve and grommet from the brake booster assy.

13. INSTALL CHECK VALVE

(a) Install the check valve and grommet to the brake booster assy.

14. INSTALL BRAKE BOOSTER GASKET

(a) Install a new brake booster gasket to the brake booster assy.

cardiagn.com

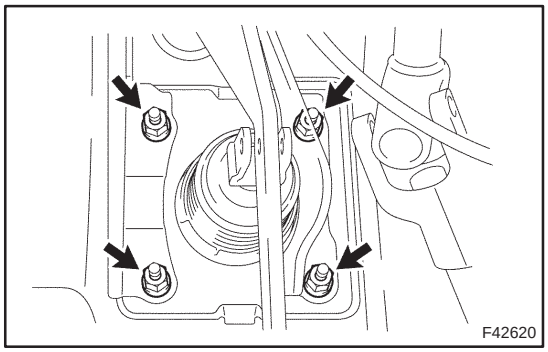

15. INSTALL BRAKE BOOSTER ASSY

(a) Install the brake booster assy with the 4 nuts.
Torque: 13 N·m (130 kgf·cm, 9 ft·lbf)

(b) Install the clevis pin and clip to the brake master cylinder clevis.

(c) Connect the vacuum hose to the brake booster assy.

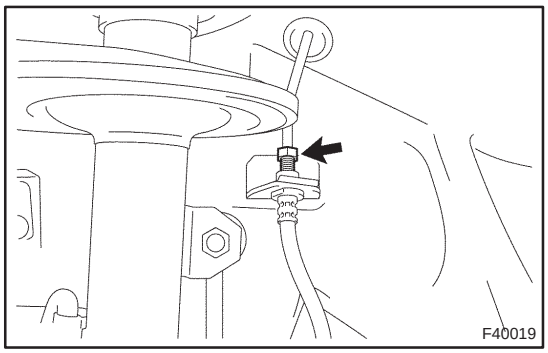

16. CONNECT FRONT BRAKE TUBE NO.5

(a) Using SST and spanner, connect the brake tube to the flexible hose.
SST 09023–00100
Torque: 15 N·m (155 kgf·cm, 11 ft·lbf)

17. INSTALL FRONT WHEEL LH
Torque: 103 N·m (1,050 kgf·cm, 76 ft·lbf)

18. INSTALL HEATER ASSY (W/ COLD AREA) (See page 55–100)

19. INSTALL BRAKE MASTER CYLINDER SUB–ASSY (See page 32–13)

(a) w/o VSC:
SST 09023–00100

(b) w/ VSC:
SST 09023–38400

20. INSTALL CHARCOAL CANISTER ASSY (GASOLINE ENGINE TYPE)

21. INSTALL FUEL FILTER ASSY (DIESEL ENGINE TYPE) (See page 11–82)

22. CONNECT ENGINE ROOM RELAY BLOCK

23. INSTALL AIR CLEANER ASSEMBLY WITH HOSE

24. FILL RESERVOIR WITH BRAKE FLUID (See page 32–4)

25. BLEED MASTER CYLINDER (See page 32–4)

(a) w/o VSC:
SST 09023–00100

(b) w/ VSC:
SST 09023–38400

26. BLEED BRAKE LINE (See page 32–4)

27. BLEED CLUTCH PIPE LINE (M/T TRANSAXLE) (See page 42–13)

28. CHECK AND ADJUST BRAKE PEDAL HEIGHT (See page 32–6)

29. CHECK PEDAL FREE PLAY (See page 32–6)

30. CHECK PEDAL RESERVE DISTANCE (See page 32–6)

31. CHECK FUEL LEAK

32. CHECK FLUID LEVEL IN RESERVOIR (See page 32–4)

33. CHECK BRAKE FLUID LEAKAGE

cardiagn.com

BRAKE BOOSTER ASSY (RHD)

ON–VEHICLE INSPECTION

320GN–02

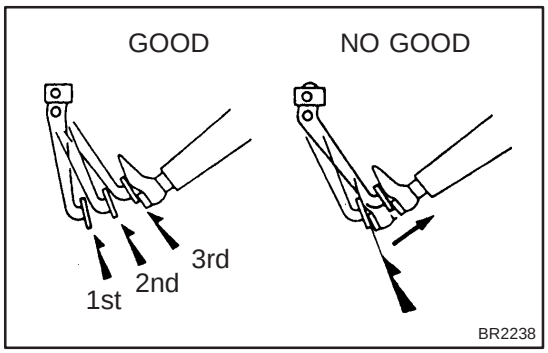

1. INSPECT BRAKE BOOSTER

(a) Airtightness check.

(1) Start the engine and stop it after 1 or 2 minutes. Depress the brake pedal several times slowly.

HINT:

If the pedal can be depressed to the f;oor the first time, but on the 2nd or 3rd time cannot be depreesed as far, the booster is airtight.

(2) Depress the brake pedal while the engine is running, and stop the engine with the pedal depressed.

HINT:

If there is no change in the pedal reserve distance after holding the pedal for 30 seconds, the booster is airtight.

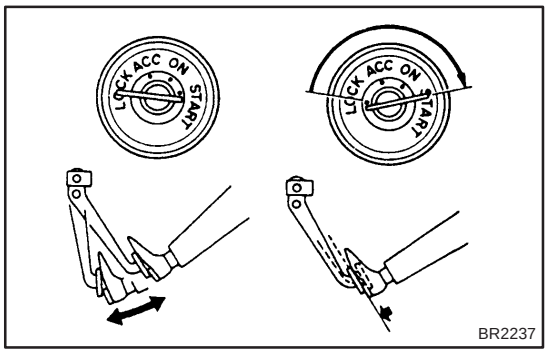

(b) Operating check.

(1) Depress the brake pedal several times with the ignition switch off and check that there is no change in the pedal reserve distance.

(2) Depress the brake pedal and start the engine.

HINT:

If the pedal goes down slightly, operation is normal.

2. INSPECT VACUUM CHECK VALVE

(a) Inspect vacuum check valve.

(1) Slide the clip and disconnect the vacuum hose.

(2) Remove the vacuum check valve.

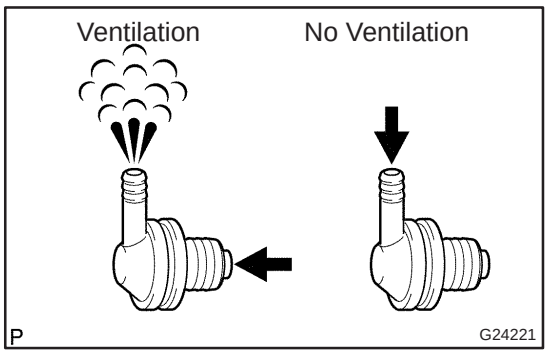

(3) Check that there is ventilation from the booster to the engine, and no ventilation from the engine to the booster.

(4) If any fault is found, replace the vacuum check valve.

cardiagn.com

320W3–01

COMPONENTS

1ZZ–FE,3ZZ–FE Engine Type:

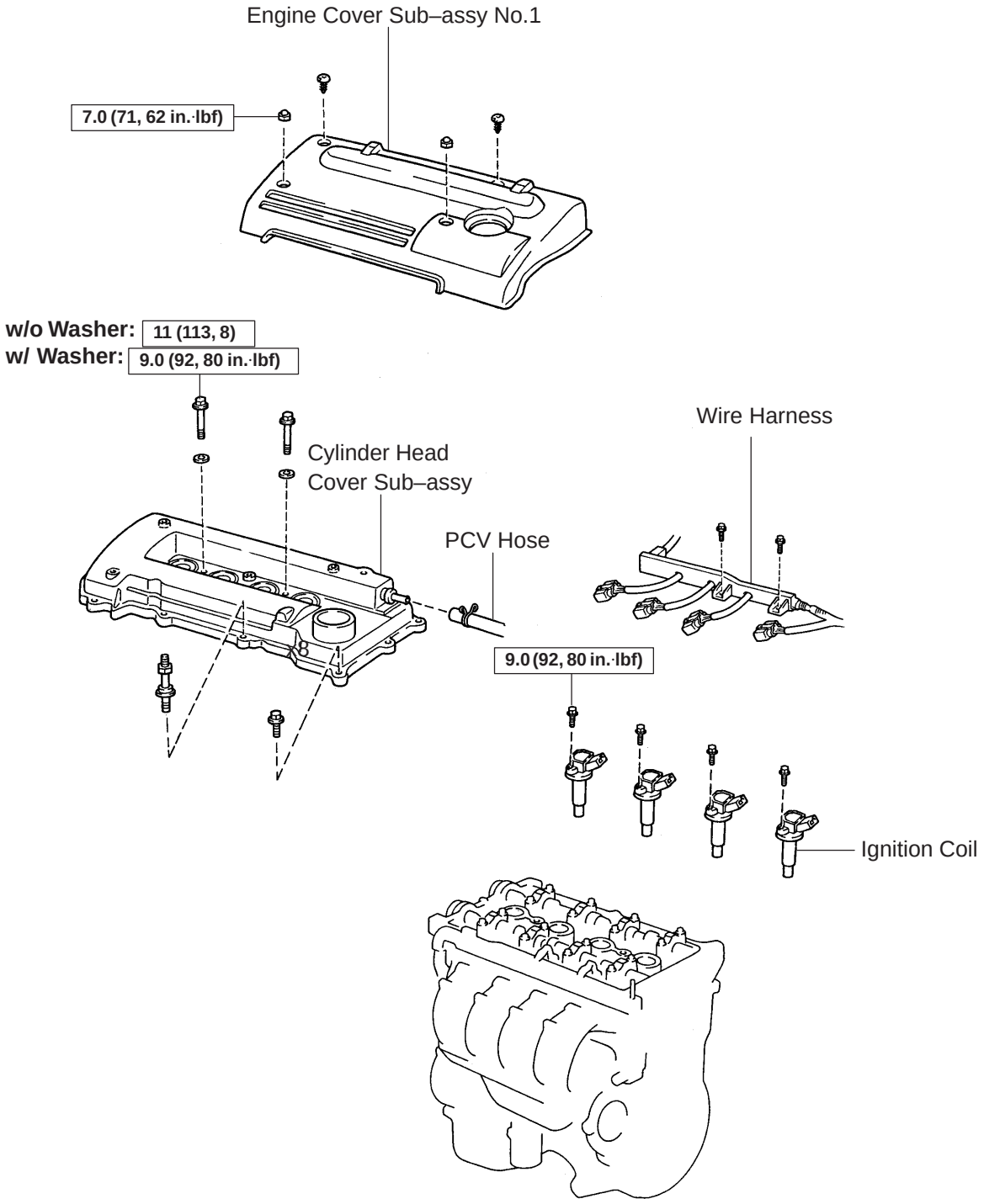

N·m (kgf·cm, ft·lbf) : Specified torque

N

F45167

cardiagn.com

1CD–FTV Engine Type:

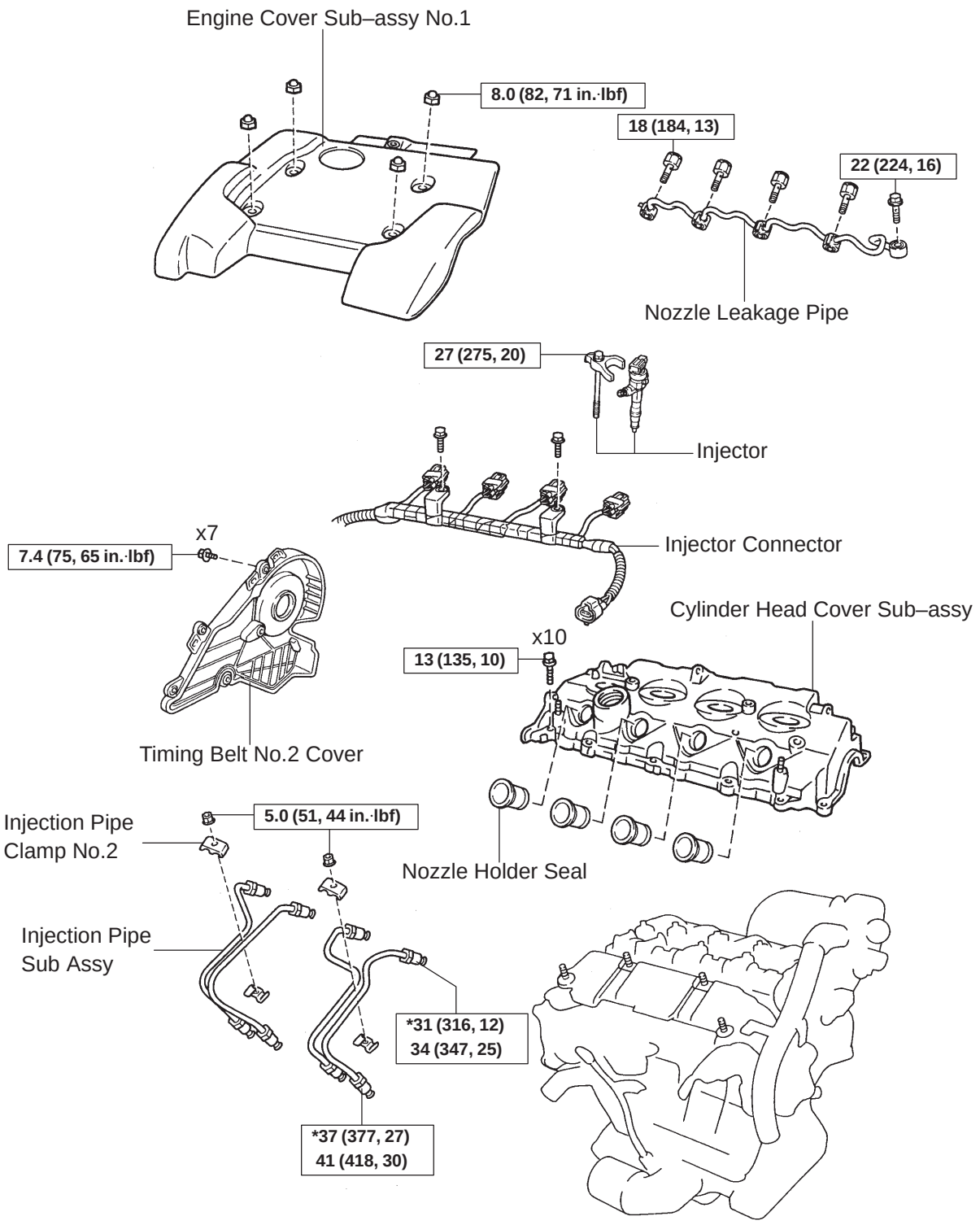

N·m (kgf·cm, ft·lbf) : Specified torque

N F42298 * For use with SST

F42611

cardiagn.com

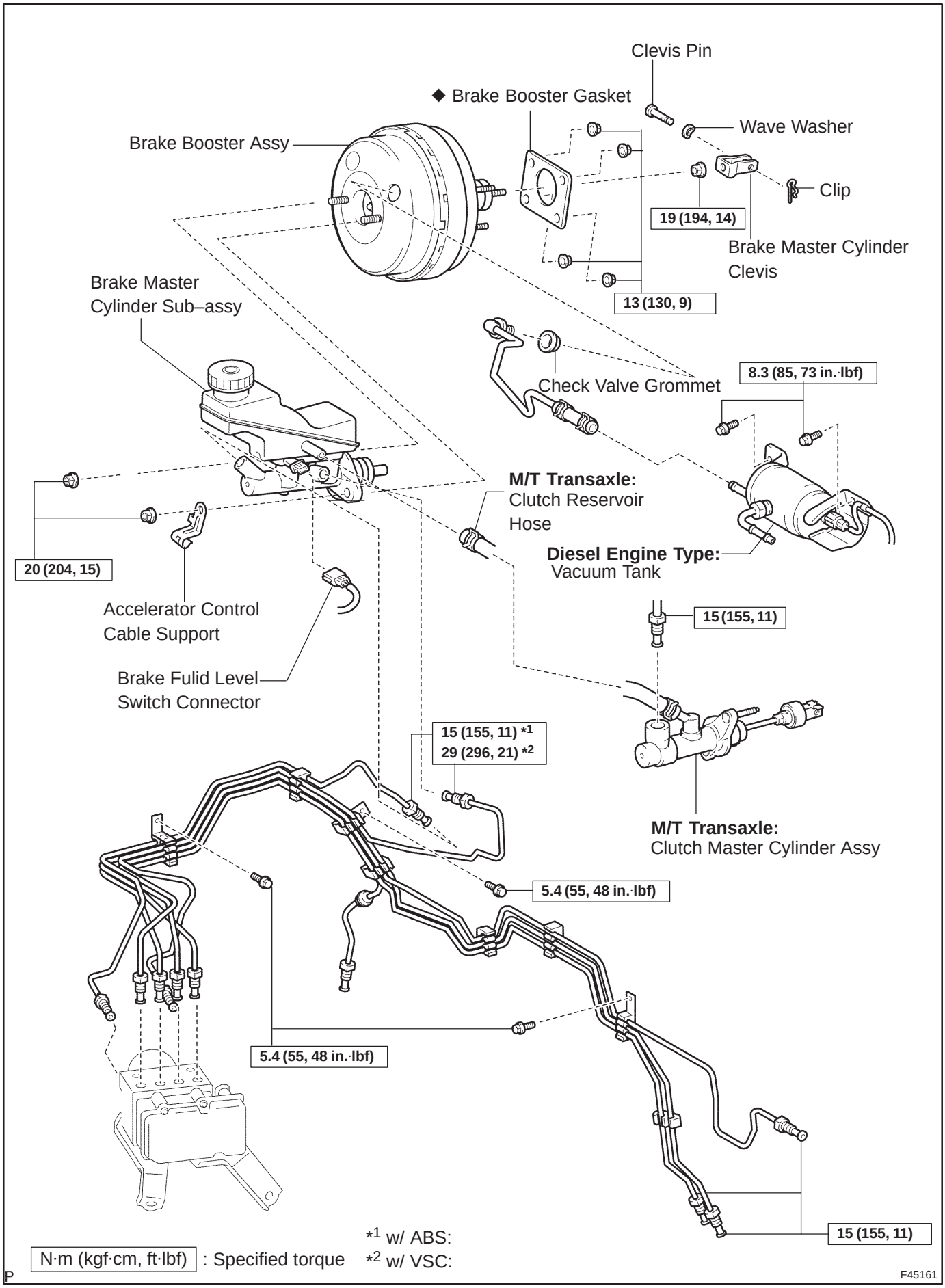

cardiagn.com

320W4–01

REPLACEMENT

NOTICE:

Do not adjust the brake booster push rod.

1. DRAIN BRAKE FLUID

NOTICE:

Wash the brake fluid off immediately if it adheres to any painted surface.

2. REMOVE BRAKE MASTER CYLINDER SUB–ASSY (See page 32–13)

(a) w/o VSC:
SST 09023–00100

(b) w/ VSC:
SST 09023–38400

3. REMOVE CLUTCH MASTER CYLINDER ASSY (M/T TRANSAXLE) (See page 42–13)
SST 09023–00100

4. REMOVE ENGINE ASSEMBLY WITH TRANSAXLE (1AZ–FSE ENGINE TYPE) (See page 14–204)

5. REMOVE ENGINE COVER NO.1

6. REMOVE IGNITION COIL ASSY (GASOLINE ENGINE TYPE) (See page 14–81)

7. REMOVE CYLINDER HEAD COVER SUB–ASSY (GASOLINE ENGINE TYPE) (See page 14–81)

8. REMOVE TIMING BELT NO.2 COVER (DIESEL ENGINE TYPE) (See page 14–307)

9. REMOVE CYLINDER HEAD COVER SUB–ASSY (DIESEL ENGINE TYPE) (See page 14–318)

10. REMOVE INJECTOR ASSY (DIESEL ENGINE TYPE) (See page 14–318)

11. REMOVE FRONT WHEEL RH

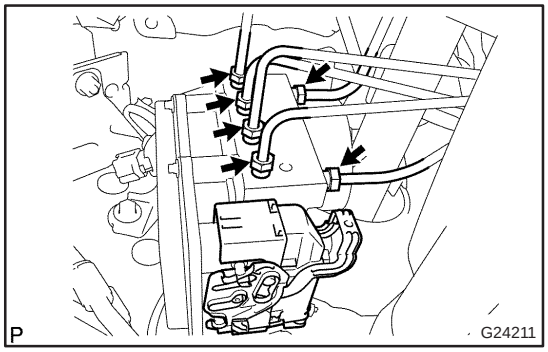

12. REMOVE BRAKE TUBE

(a) w/o VSC:
Using SST, disconnect the 6 brake tubes from the brake actuator.
SST 09023–00100

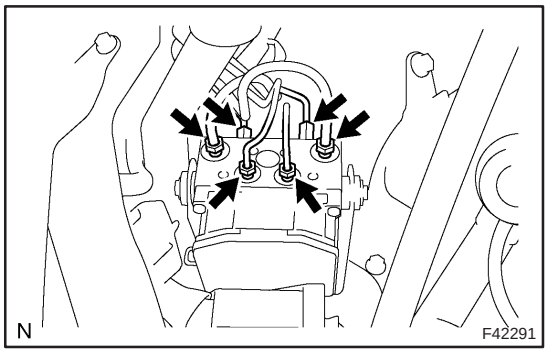

(b) w/ VSC:
Using SST, disconnect the 6 brake tubes from the brake actuator.
SST 09023–00100, 09023–38400

cardiagn.com

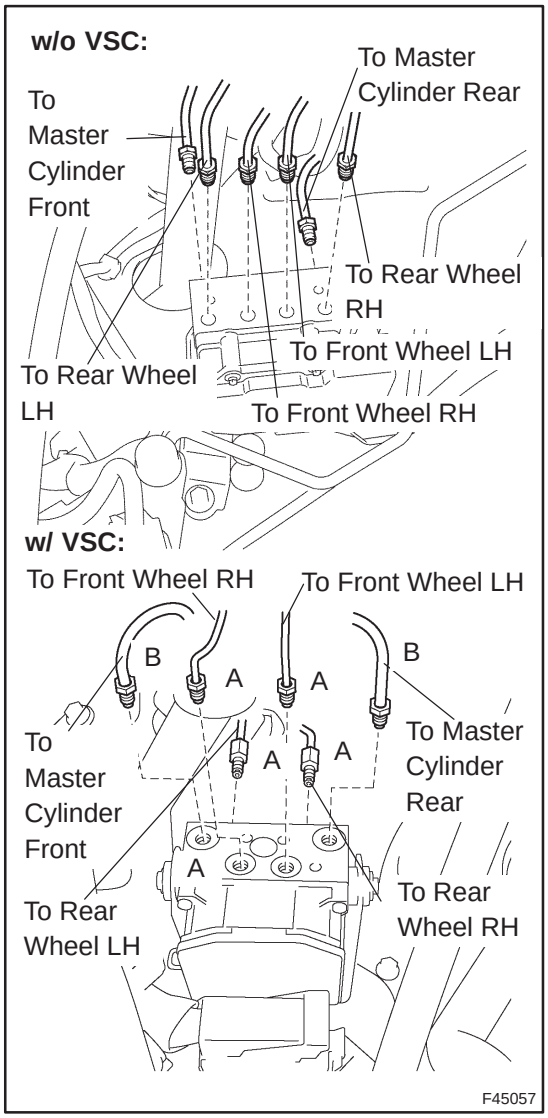

(c) Use tags or make a memo to identify the place to reconnect.

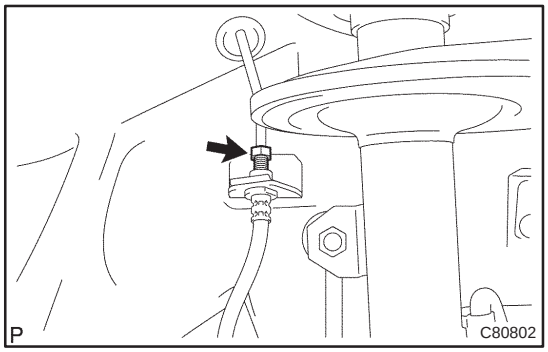

(d) Using SST and a spanner, disconnect the brake tube from the flexible hose of the front brake RH.
SST 09023–00100

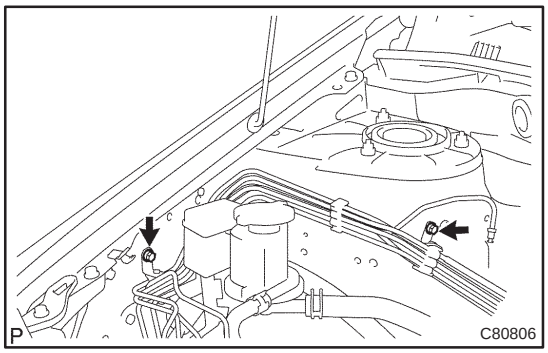

(e) Remove the 2 bolts and disconnect the 2 brake tube clamps.

cardiagn.com

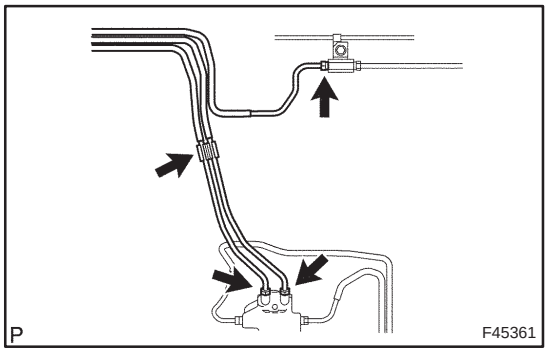

(f) Using SST, disconnect the 3 brake tubes from the ways.
SST 09023–00100

(g) Disconnect the brake tube from the clamp and remove the brake tubes.

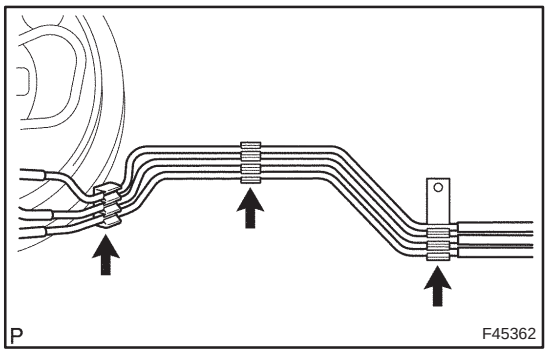

(h) Disconnect the 3 brake tubes from the clamp and remove the brake tubes.

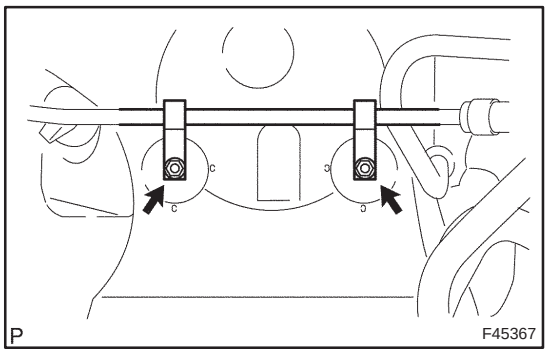

13. REMOVE BRAKE BOOSTER ASSY

(a) Gasoline engine type:
Remove the 2 bolts and separate the vacuum pipe from the body.

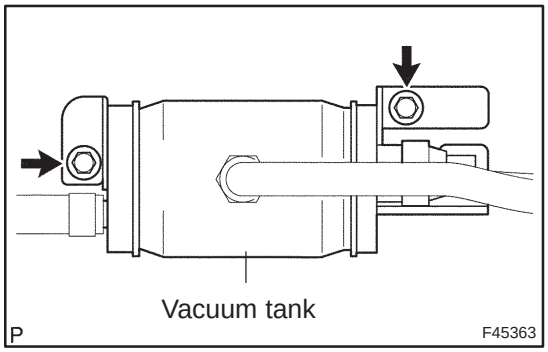

(b) Diesel engine type:
Remove the 2 bolts and remove the vacuum tank from the body.

(c) Disconnect the vacuum hose from the brake booster assy.

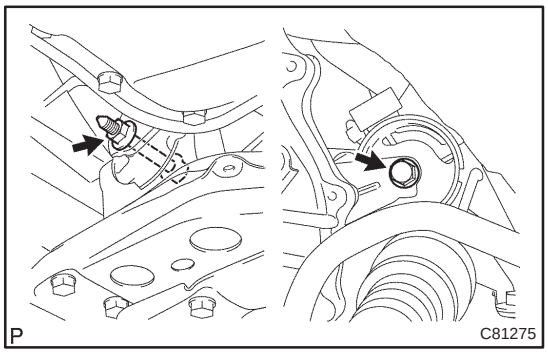

(d) Remove the engine under cover.

(e) Remove the 2 nuts from the engine mounting bracket RH.

(f) Remove the bolt from the rear engine mounting bracket.

(g) Remove the bolt and nut from the front engine mounting bracket.

cardiagn.com

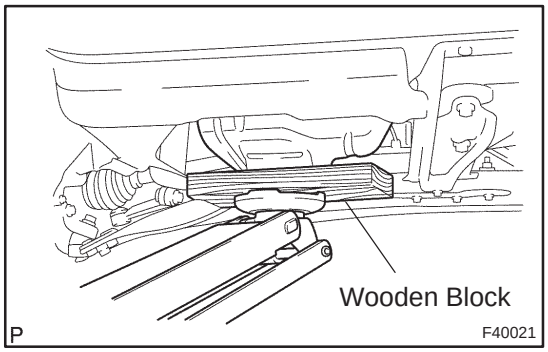

(h) Hold the engine with a jack, putting a wooden block between them.

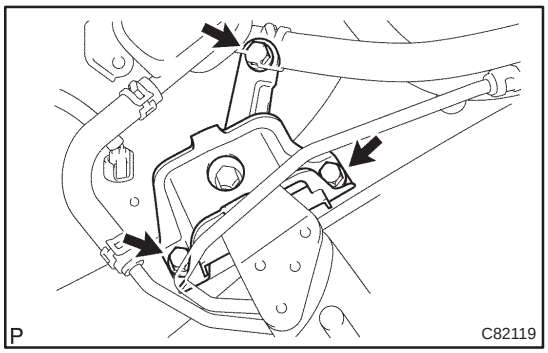

(i) Remove the 3 bolts and separate the engine mounting bracket RH from the body.

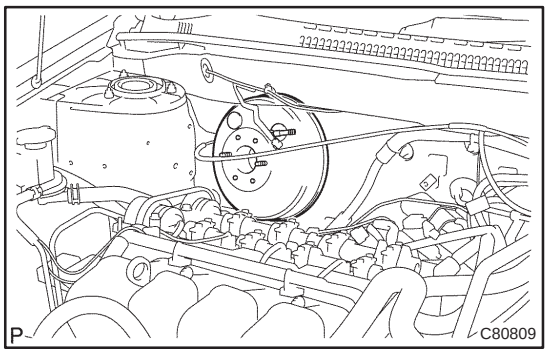

(j) Gradually tilt the engine by lowering the jack to remove the brake booster assy.

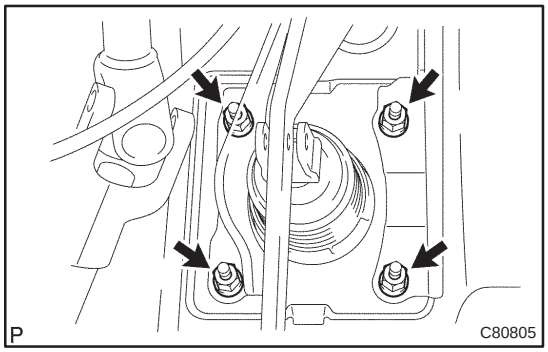

(k) Remove the 4 nuts and clevis.
(l) Pull out the brake booster assy.

14. REMOVE BRAKE BOOSTER GASKET

(a) Pull out the brake booster gasket.

15. REMOVE CHECK VALVE

(a) Remove the check valve from the brake booster assy.

16. INSTALL CHECK VALVE

(a) Install the check valve and grommet to the brake booster assy.

17. INSTALL BRAKE BOOSTER GASKET

(a) Install a new brake booster gasket to the brake booster assy.

cardiagn.com

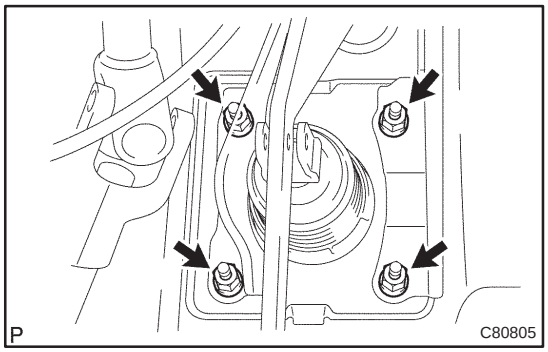

18. INSTALL BRAKE BOOSTER ASSY

(a) Install the clevis to the booster push rod.

(b) Install the brake booster assy with the 4 nuts.
Torque: 13 N·m (130 kgf·cm, 9 ft·lbf)

(c) Connect the vacuum hose to the check valve.

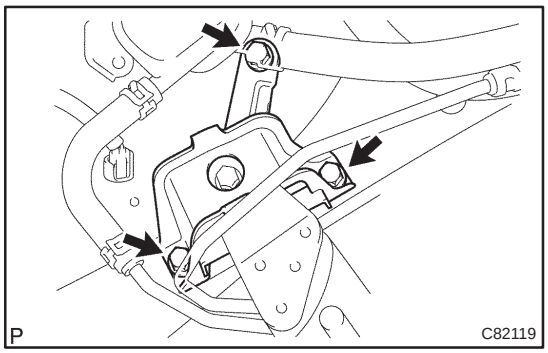

(d) Install the engine mounting bracket RH to the body with the 3 bolts.
Torque: 52 N·m (530 kgf·cm, 39 ft·lbf)

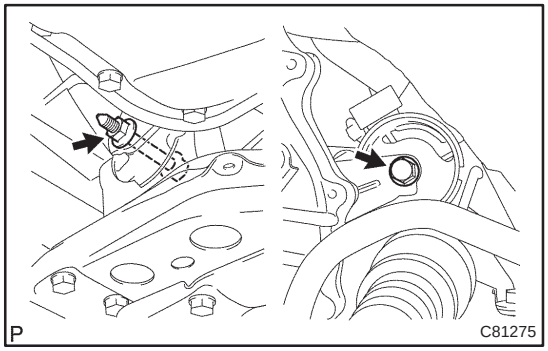

(e) Install the bolt to the rear engine mounting bracket.
Torque: 87 N·m (887 kgf·cm, 64 ft·lbf)

(f) Install the bolt and nut to the front engine mounting bracket.
Torque: 52 N·m (530 kgf·cm, 39 ft·lbf)

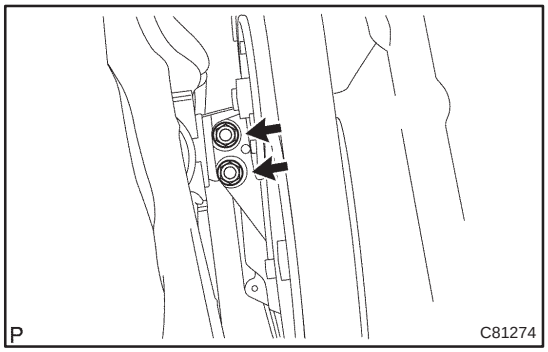

(g) Install the 2 nuts to the engine mounting bracket RH.
Torque: 52 N·m (530 kgf·cm, 39 ft·lbf)

(h) Install the engine under cover.

(i) Connect the vacuum hose to the brake booster assy.

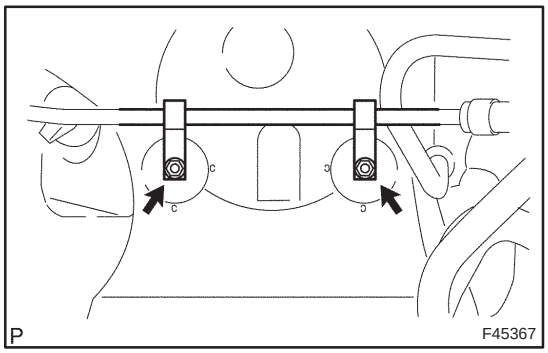

(j) Gasoline engine type:
Install the vacuum pipe with 2 bolts to the body.
Torque: 5.4 N·m (55 kgf·cm, 48 in.·lbf)

cardiagn.com

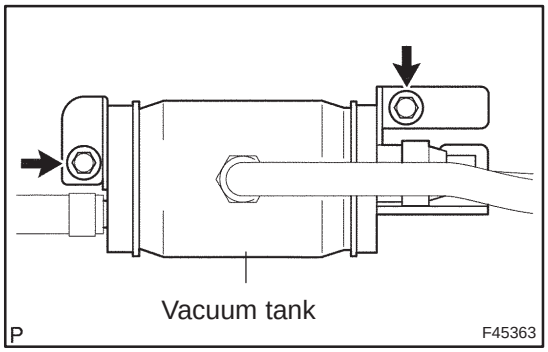

(k) Diesel engine type:
Install the vacuum tank with 2 bolts.
Torque: 8.3 N·m (85 kgf·cm, 73 in.·lbf)

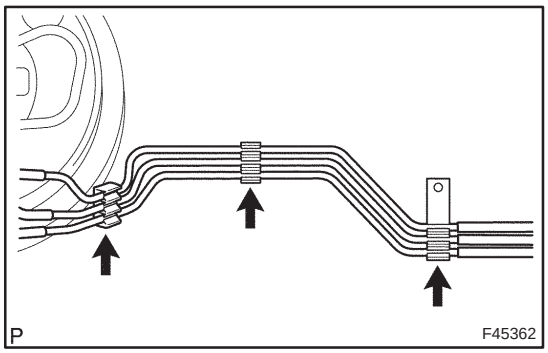

19. INSTALL BRAKE TUBE

(a) Disconnect the 3 brake tubes from the clamp and remove the brake tubes.

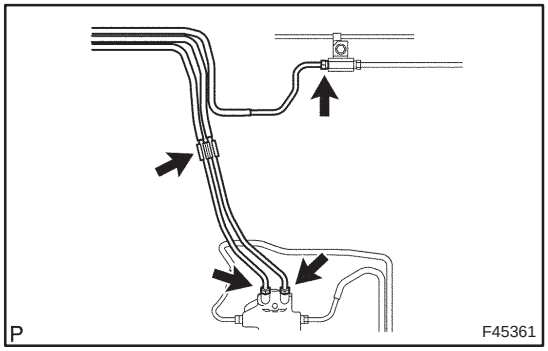

(b) Using SST, connect the 3 brake tubes to the ways.
SST 09023–00100
Torque: 15 N·m (155 kgf·cm, 11 ft·lbf)

(c) Connect the brake tube to the clamp.

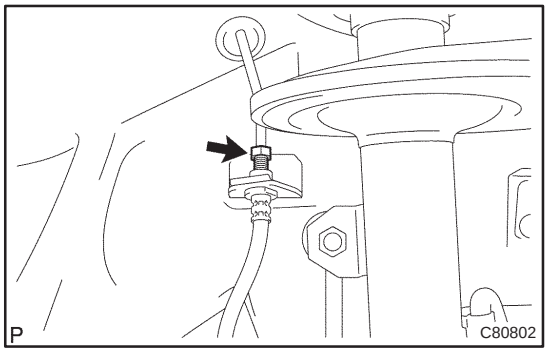

(d) Using SST and a spanner, connect the brake tube to the flexible hose of front brake RH.
SST 09023–00100
Torque: 15 N·m (155 kgf·cm, 11 ft·lbf)

cardiagn.com

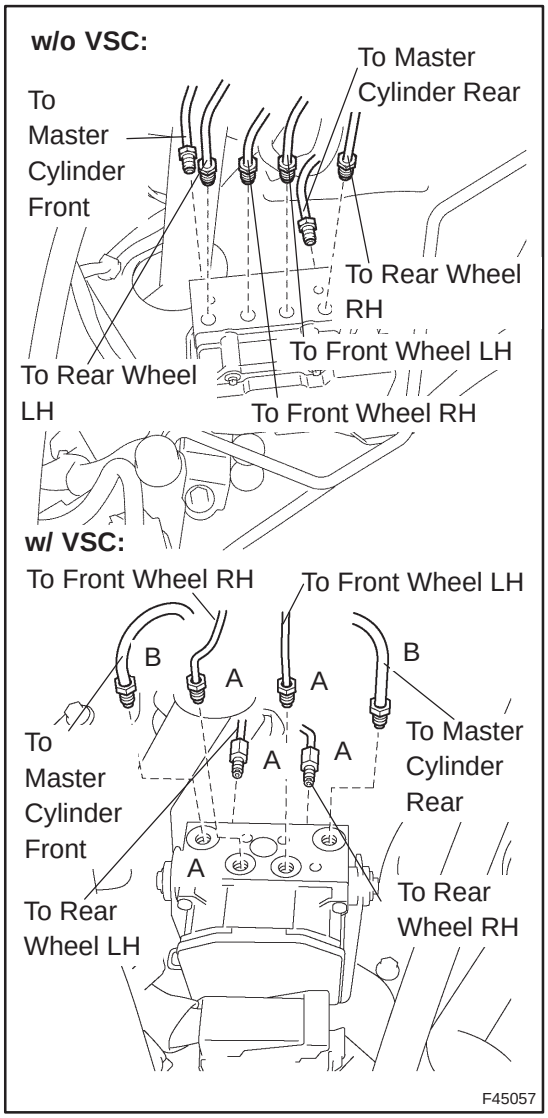

(e) w/o VSC:
Using SST, connect the 6 brake tubes to the brake actuator, as shown in the illustration.
SST 09023–00100
Torque: 15 N·m (155 kgf·cm, 11 ft·lbf)

(f) w/ VSC:
Using SST, connect the 6 brake tubes to the brake actuator as shown in the illustration.
SST 09023–00100, 09023–38400
Torque:
A: 15 N·m (155 kgf·cm, 11 ft·lbf)
B: 29 N·m (296 kgf·cm, 21 ft·lbf)

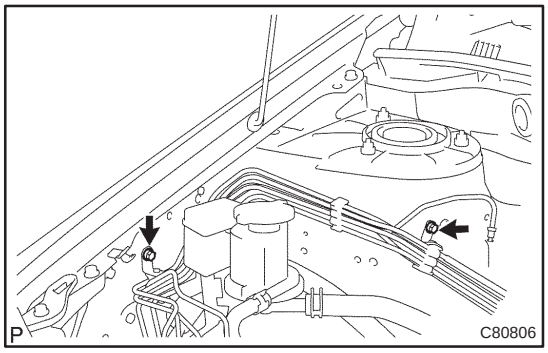

(g) Install the brake tube clamps with the 2 bolts.
Torque: 5.4 N·m (55 kgf·cm, 48 in.·lbf)

20. INSTALL FRONT WHEEL RH
21. INSTALL CYLINDER HEAD COVER SUB–ASSY (GASOLINE ENGINE TYPE) (See page 14–81)
22. INSTALL IGNITION COIL ASSY (GASOLINE ENGINE TYPE) (See page 14–81)
23. INSTALL INJECTOR ASSY (DIESEL ENGINE TYPE) (See page 14–318)
24. INSTALL CYLINDER HEAD COVER SUB–ASSY (DIESEL ENGINE TYPE) (See page 14–318)
25. INSTALL TIMING BELT NO.2 COVER (DIESEL ENGINE TYPE) (See page 14–307)

cardiagn.com

26. INSTALL ENGINE COVER NO.1
27. INSTALL ENGINE ASSEMBLY WITH TRANSAXLE (1AZ–FSE ENGINE TYPE) (See page 14–204)
28. INSTALL CLUTCH MASTER CYLINDER ASSY (M/T TRANSAXLE) (See page 42–13)
SST 09023–00100
29. INSTALL BRAKE MASTER CYLINDER SUB–ASSY (See page 32–13)
(a) w/o VSC:
SST 09023–00100
(b) w/ VSC:
SST 09023–38400
30. FILL RESERVOIR WITH BRAKE FLUID (See page 32–4)
31. BLEED MASTER CYLINDER (See page 32–4)
(a) w/o VSC:
SST 09023–00100, 09023–00100
(b) w/ VSC:
SST 09023–00100, 09023–00100
32. BLEED BRAKE LINE (See page 32–4)
33. CHECK AND ADJUST BRAKE PEDAL HEIGHT (See page 32–6)
34. CHECK PEDAL FREE PLAY (See page 32–6)
35. CHECK PEDAL RESERVE DISTANCE (See page 32–6)
36. BLEED CLUTCH PIPE LINE (M/T TRANSAXLE) (See page 42–13)
37. INSPECT AND ADJUST CLUTCH PEDAL SUB–ASSY (M/T TRANSAXLE) (See page 42–2)
38. CHECK FLUID LEVEL IN RESERVOIR (See page 32–4)
39. CHECK BRAKE FLUID LEAKAGE
40. CHECK CLUTCH FLUID LEAKAGE (M/T TRANSAXLE)

cardiagn.com

BRAKE FLUID

3201C–08

BLEEDING

NOTICE:

Wash the brake fluid off immediately if it adheres to any painted surfaces.

HINT:

When working on the brake system or when air in the brake lines is suspected, bleed the air from the system.

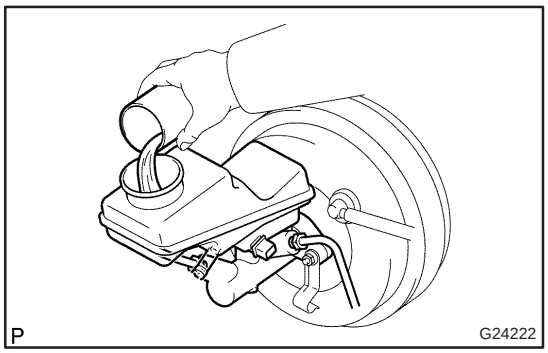

1. FILL RESERVOIR WITH BRAKE FLUID
Fluid: SAE J1704 or FMVSS No. 116 DOT4

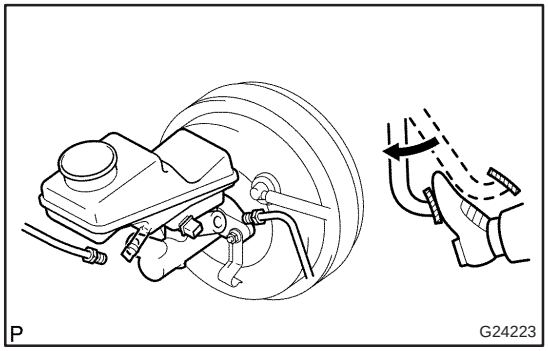

2. BLEED MASTER CYLINDER

HINT:

After disassembling the master cylinder or when the reservoir becomes empty, bleed the air out of the brake master cylinder.

(a) w/o VSC:
Using SST, Disconnect the brake lines from the brake master cylinder.
SST 09023–00100

(b) w/ VSC:
Using SST, Disconnect the brake lines from the brake master cylinder.
SST 09023–38400

(c) Slowly depress and hold the brake pedal it.

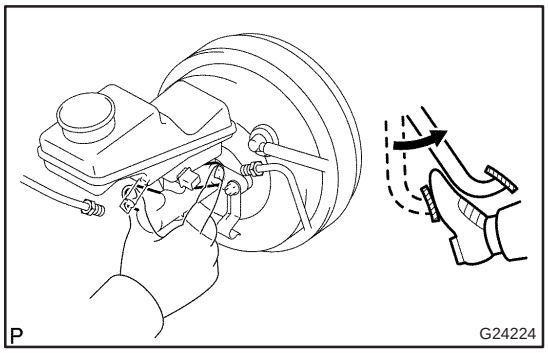

(d) Cover off the outer holes with your fingers, and release the brake pedal.

(e) Repeat (b) and (c) 3 or 4 times.

cardiagn.com

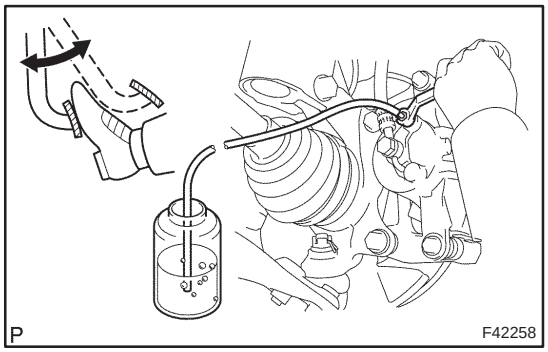

3. BLEED BRAKE LINE

(a) Connect the vinyl tube to the brake caliper.

(b) Depress the brake pedal several times, then loosen the bleeder plug with the pedal depressed.

(c) At the point when the fluid stops, coming out tighten the bleeder plug, then release the brake pedal.

(d) Repeat (b) and (c) until all the air in the fluid has been bled out.

(e) Repeat the above procedure to bleed the air out of the brake line for each wheel.
Torque: 10 N·m (102 kgf·cm, 7 ft.·lbf)

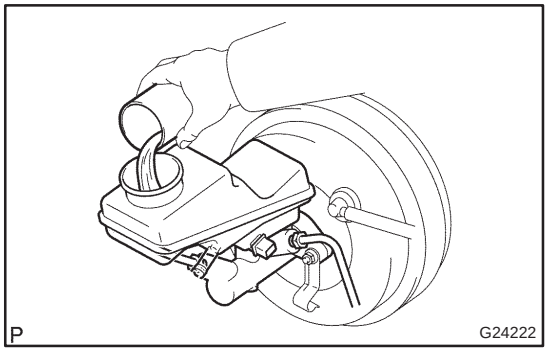

4. CHECK FLUID LEVEL IN RESERVOIR

(a) Check the fluid level and add fluid if necessary.
Fluid: SAE J1704 or FMVSS No. 116 DOT4

cardiagn.com

BRAKE MASTER CYLINDER SUB–ASSY

COMPONENTS

320W5–01

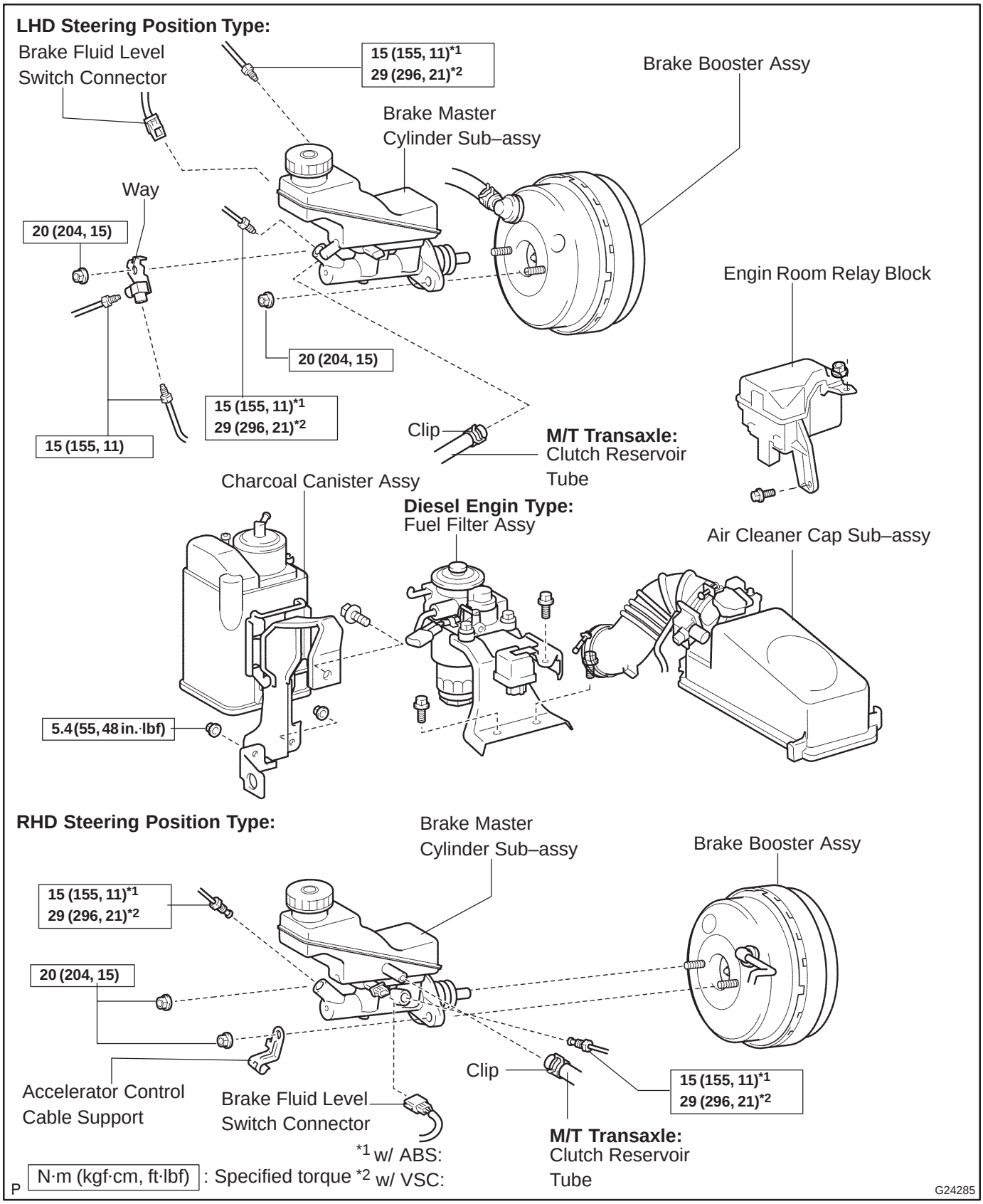

cardiagn.com

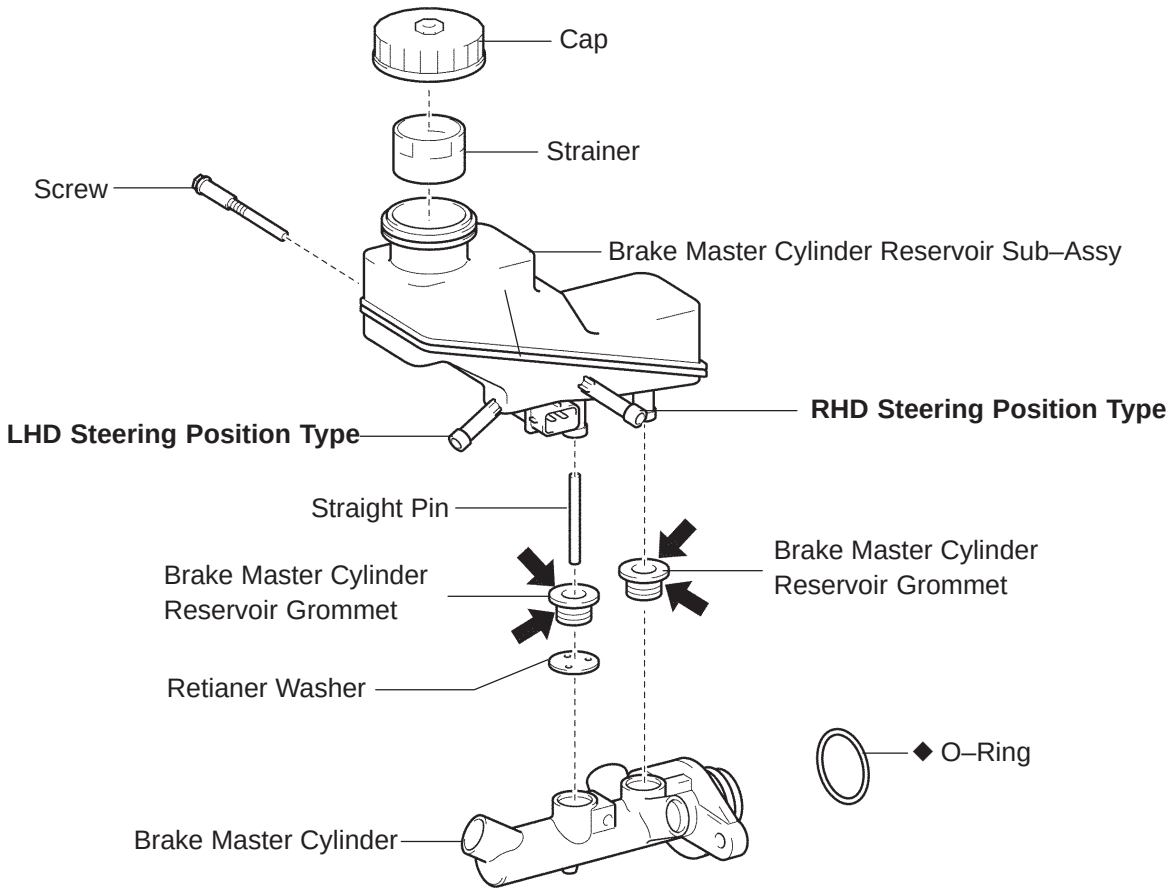

N·m (kgf·cm, ft·lbf) : Specified torque
◆ Non–reusable part
P ⬅ Lithium soap base glycol grease

G24284

cardiagn.com

320W6–01

REPLACEMENT

NOTICE:

Do not adjust the brake booster push rod.

1. DRAIN BRAKE FLUID

NOTICE:

Wash the brake fluid off immediately if it adheres to any painted surface.

2. REMOVE ENGINE ROOM RELAY BLOCK (LHD STEERING POSITION TYPE)

3. REMOVE AIR CLEANER CAP SUB–ASSY (LHD STEERING POSITION TYPE)

4. REMOVE CHARCOAL CANISTER ASSY (LHD STEERING POSITION TYPE)

5. REMOVE FUEL FILTER ASSY (LHD STEERING POSITION TYPE)

(a) Diesal engine type:
Remove the fuel filter assy with the 3 bolts.

6. REMOVE BRAKE MASTER CYLINDER SUB–ASSY (LHD STEERING POSITION TYPE)

(a) Disconnect the brake fluid level switch connector.

(b) M/T transaxle:
Slide the clip and disconnect the clutch reservoir tube.

(c) w/o VSC:
Using SST, disconnect the 2 brake lines from the brake master cylinder sub–assy.
SST 09023–00100

(d) w/ VSC:
Using SST, disconnect the 2 brake lines from the brake master cylinder sub–assy.
SST 09023–38400

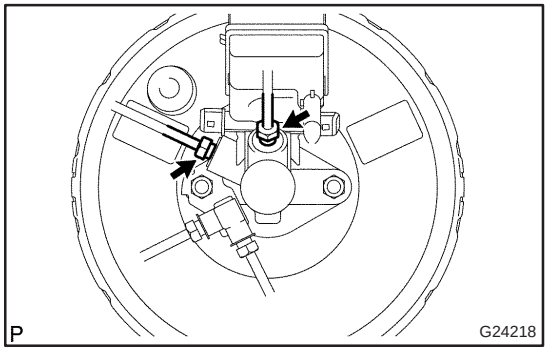

(e) Using SST, disconnect the 2 brake lines from the way.
SST 09023–00100

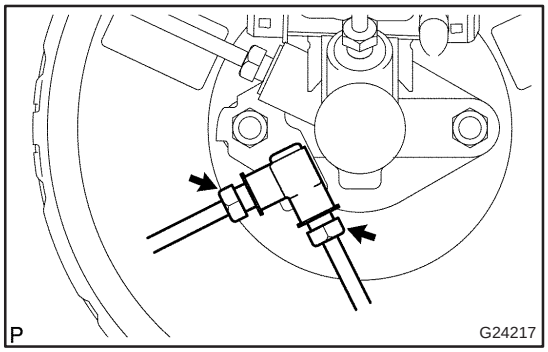

(f) Remove the 2 nuts, and pull out the way and brake master cylinder sub–assy.

(g) Remove the O–ring from the brake master cylinder sub–assy.

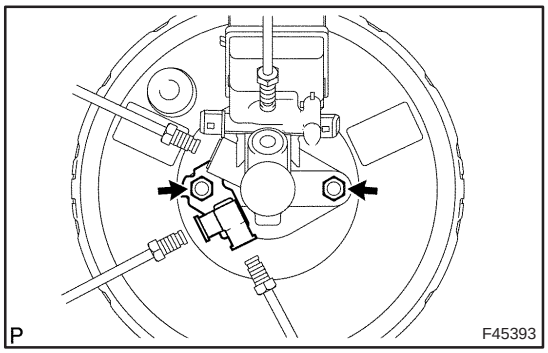

cardiagn.com

7. REMOVE BRAKE MASTER CYLINDER SUB–ASSY (RHD STEERING POSITION TYPE)

(a) Disconnect the brake fluid level switch connector.

(b) M/T transaxle:
Slide the clip and disconnect the clutch reservoir tube.

(c) w/o VSC:
Using SST, disconnect the 2 brake lines from the brake master cylinder sub–assy.
SST 09023–00100

(d) w/ VSC:
Using SST, disconnect the 2 brake lines from the brake master cylinder sub–assy.
SST 09023–38400

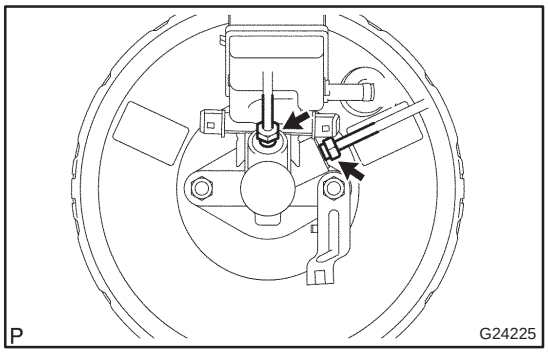

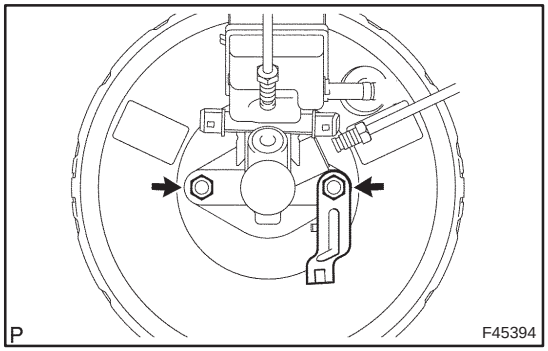

(e) Remove the 2 nuts and pull out the accelerator control cable support and brake master cylinder sub–assy.

(f) Remove the O–ring from the brake master cylinder sub–assy.

8. REMOVE BRAKE MASTER CYLINDER RESERVOIR SUB–ASSY

(a) Using a screwdriver, remove the screw from the brake master cylinder.

(b) Remove the brake master cylinder reservoir sub–assy and 2 brake master cylinder reservoir grommets from the brake master cylinder.

(c) Remove the cap and strainer from the master cylinder reservoir.

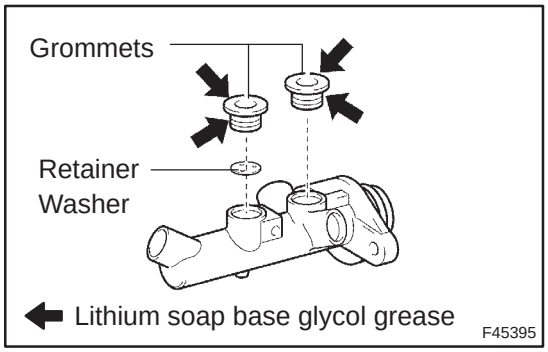

9. INSTALL BRAKE MASTER CYLINDER RESERVOIR SUB–ASSY

(a) Apply lithium soap base grycol grease to the 2 brake master cylinder reservoir grommets.

(b) Install the retainer washer to the brake master cylinder.

(c) Install the 2 brake master cylinder reservoir grommets to the brake master cylinder.

(d) Using a screwdriver, install the brake master cylinder resevoir sub–assy with the screw.

cardiagn.com

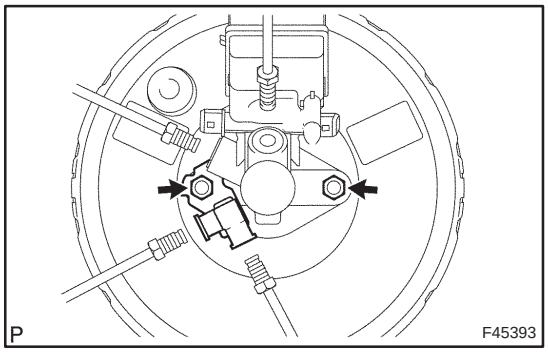

10. INSTALL BRAKE MASTER CYLINDER SUB–ASSY (LHD STEERING POSITION TYPE)

(a) Install the new O–ring from the brake master cylinder sub–assy.

(b) Install the brake master cylinder sub–assy and way bracket with the 2 nuts.
Torque: 20 N·m (204 kgf·cm, 15 ft·lbf)

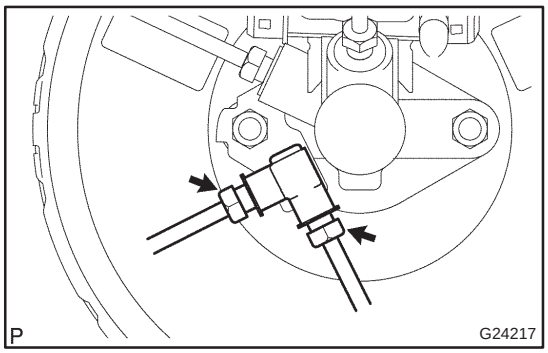

(c) Using SST, connect the 2 brake lines to the way.
SST 09023–00100
Torque: 15 N·m (155 kgf·cm, 11 ft·lbf)

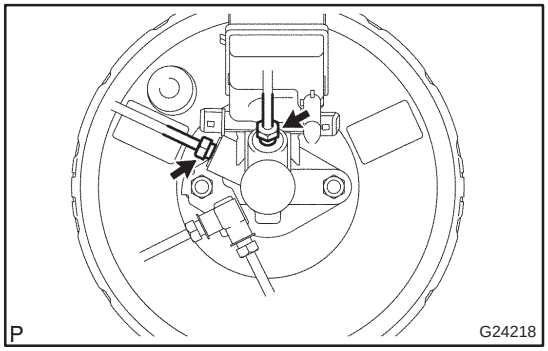

(d) w/o VSC:
Using SST, connect the 2 brake lines to the brake master cylinder sub–assy.
SST 09023–00100
Torque: 15 N·m (155 kgf·cm, 11 ft·lbf)

(e) w/ VSC:
Using SST, connect the 2 brake lines to the brake master cylinder sub–assy.
SST 09023–38400
Torque: 29 N·m (296 kgf·cm, 21 ft·lbf)

(f) M/T transaxle:
Slide the clip and connect the clutch reservoir tube.

(g) Connect the brake fluid level switch connector.

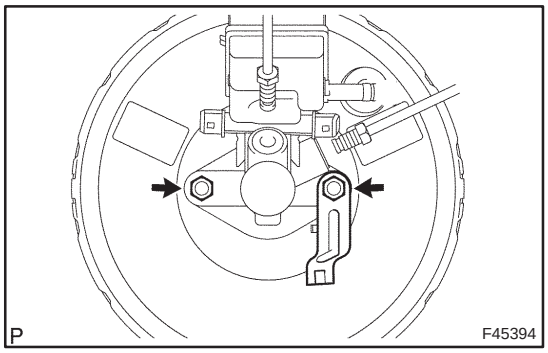

11. INSTALL BRAKE MASTER CYLINDER SUB–ASSY (RHD STEERING POSITION TYPE)

(a) Install the new O–ring from the brake master cylinder sub–assy.

(b) Install the brake master cylinder sub–assy and accelerator control cable support with the 2 nuts.
Torque: 20 N·m (204 kgf·cm, 15 ft·lbf)

cardiagn.com

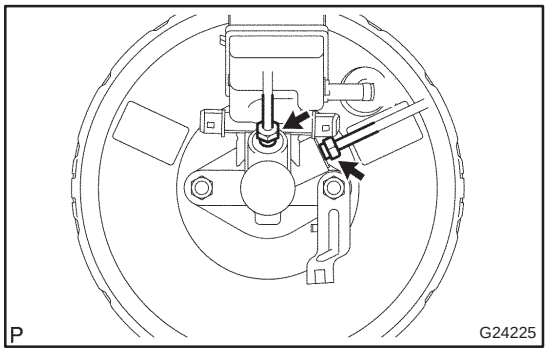

(c) w/o VSC:
Using SST, connect the 2 brake lines to the brake master cylinder sub–assy.
SST 09023–00100
Torque: 15 N·m (155 kgf·cm, 11 ft·lbf)

(d) w/ VSC:
Using SST, connect the 2 brake lines to the brake master cylinder sub–assy.
SST 09023–38400
Torque: 29 N·m (296 kgf·cm, 21 ft·lbf)

(e) M/T transaxle:
Slide the clip and connect the clutch reservoir tube.

(f) Connect the brake fluid level switch connector.

12. INSTALL CHARCOAL CANISTER ASSY (LHD STEERING POSITION TYPE)
13. INSTALL ENGINE ROOM RELAY BLOCK (LHD STEERING POSITION TYPE)
14. INSTALL AIR CLEANER CAP SUB–ASSY (LHD STEERING POSITION TYPE)
15. INSTALL FUEL FILTER ASSY (LHD STEERING POSITION TYPE)
16. FILL RESERVOIR WITH BRAKE FLUID (See page 32–4)
17. BLEED MASTER CYLINDER (See page 32–4)

(a) w/o VSC:
SST 09023–00100

(b) w/ VSC:
SST 09023–38400

18. BLEED BRAKE LINE (See page 32–4)
19. BLEED CLUTCH PIPE LINE (M/T TRANSAXLE) (See page 42–13)
20. CHECK FLUID LEVEL IN RESERVOIR (See page 32–4)
21. CHECK BRAKE FLUID LEAKAGE

cardiagn.com

BRAKE PEDAL SUB–ASSY

ADJUSTMENT

320VI–01

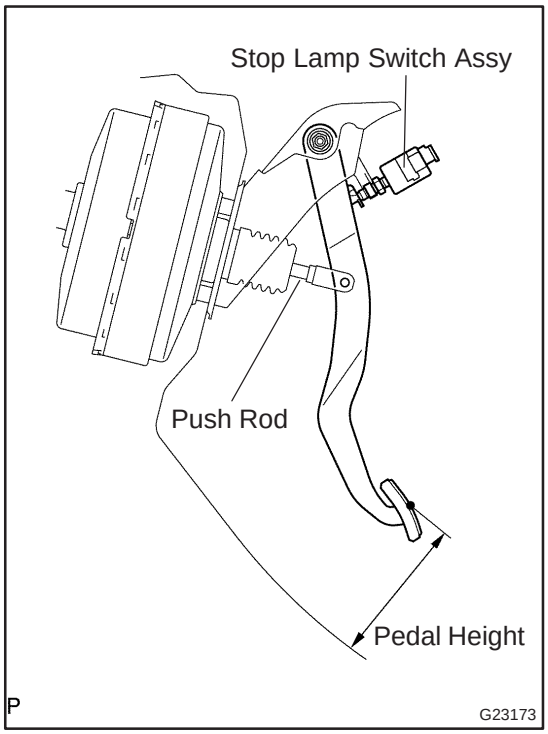

1. CHECK AND ADJUST BRAKE PEDAL HEIGHT

(a) Inspect brake pedal height.

Pedal height from dash panel:
RHD: 142.5 to 152.5 mm (5.610 to 6.004 in.)
LHD:
M/T: 148.1 to 158.1 mm (5.831 to 6.224 in.)
A/T: 149.9 to 159.9 mm (5.902 to 6.295 in.)

(b) Adjust brake pedal height.
- (1) Remove the instrument finish panel lower.
- (2) Disconnect the connector from the stop lamp switch assy.
- (3) Turn the stop lamp switch assy counterclokwise and remove the stop lamp switch assy.
- (4) Loosen the brake master cylinder push rod clevis lock nut.
- (5) Adjust the pedal height by turning the pedal push rod.
- (6) Tighten the push rod lock nut.

Torque: 19 N·m (194 kgf·cm, 14 ft·lbf)

HINT:
If the pedal height is incorrect, check and adjust the stop lamp switch clearance.

(c) Disconnect the stop lamp switch assy connector from the stop lamp switch assy.

(d) Turn the stop lamp switch assy counterclockwise and remove the stop lamp switch assy.

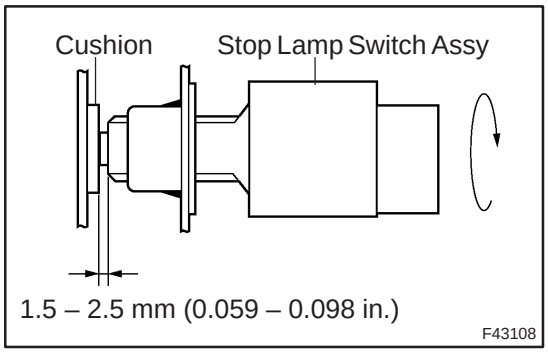

(e) Insert the stop lamp switch assy until the body hits the cushion.

NOTICE:
When inserting the stop lamp switch assy, support the pedal from behind so that the pedal is not pushed in.

(f) Make a quarter turn clockwise to install the stop lamp switch assy.

NOTICE:
The turning torque for installing the stop lamp switch assy.
Torque: 1.5 N·m (15 kgf·cm, 13 in.·lbf) or less

(g) Connect the stop lamp switch connector to the stop lamp switch assy.

cardiagn.com

(h) Check the protrusion of the rod.
Protrusion of the rod: 0.5 to 2.6 mm (0.020 to 0.102 in.)

(i) Install the clevis pin and clip.

(j) After adjusting the pedal height, check the pedal free play.

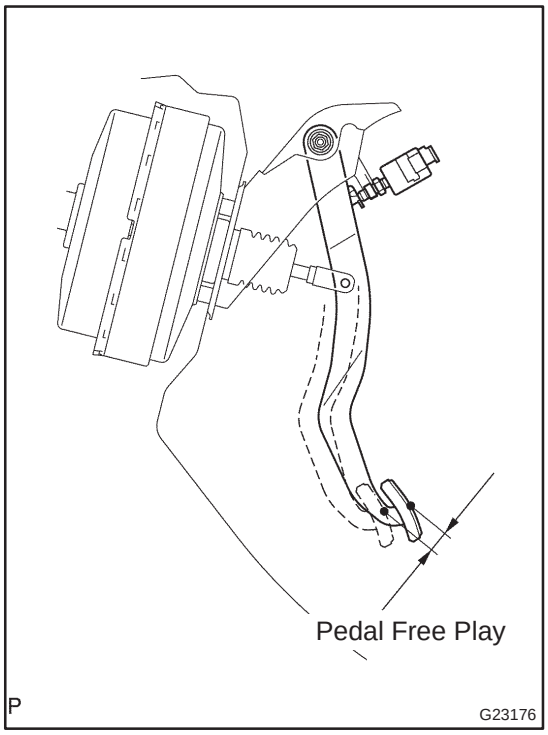

2. CHECK PEDAL FREE PLAY

(a) Stop the engine and depress the brake pedal several times until there is no more vacuum left in the booster.

(b) Push in the pedal until the beginning of the resistance is felt. Measure the distance, as shown.
Pedal free play: 1 to 6 mm (0.04 to 0.24 in.)

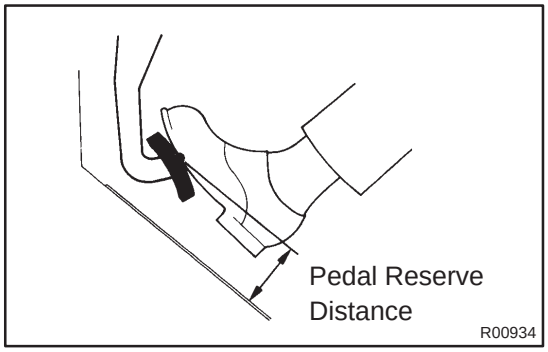

3. CHECK PEDAL RESERVE DISTANCE

(a) Release the parking brake lever.
With the engine running, depress the pedal and measure the pedal reserve distance, as shown.
Pedal reserve distance from asphalt sheet at 490 N (50 kgf, 110.2 lbf): More than 50 mm (1.97 in.)

If the distance is out of the specification , troubleshoot the brake system.

cardiagn.com

320G0–02

COMPONENTS

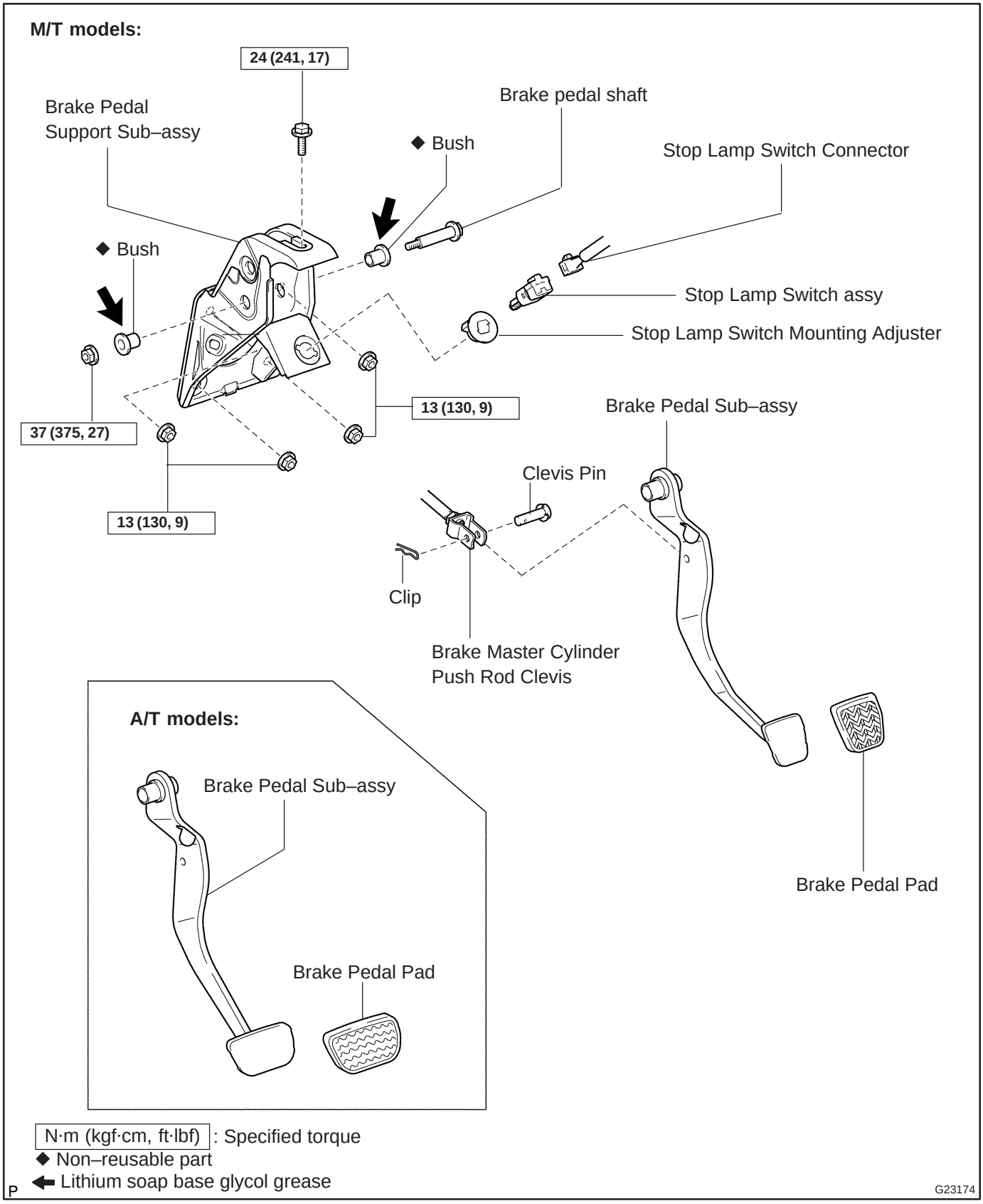

N·m (kgf·cm, ft·lbf) : Specified torque
◆ Non–reusable part
⬅ Lithium soap base glycol grease

P

G23174

cardiagn.com

REPLACEMENT

1. REMOVE COMBINATION METER ASSEMBLY (See page 71–21)

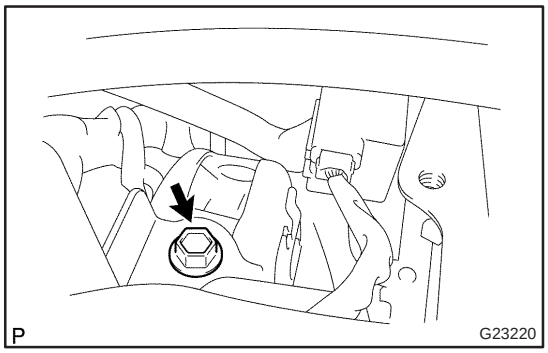

2. REMOVE BRAKE PEDAL SUPPORT SUB–ASSY

(a) Remove the bolt from the brake pedal support sub–assy.
(b) Disconnect the stop lamp switch connector.
(c) Remove the clip and clevis pin, and disconnect the brake master cylinder push rod clevis from the brake pedal sub–assy.

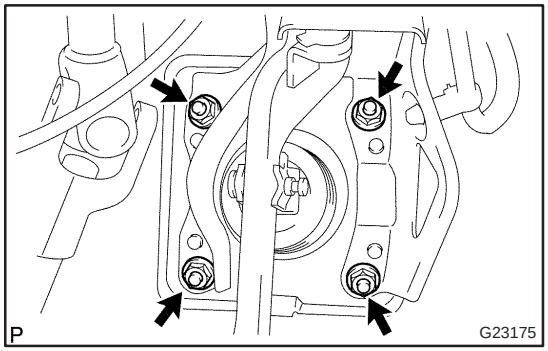

(d) Remove the 4 nuts and brake pedal support sub–assy.

3. REMOVE BRAKE PEDAL SUB–ASSY

(a) Remove the brake pedal shaft and nut from the brake pedal support sub–assy.
(b) Remove the brake pedal sub–assy and 2 bushes.

4. REMOVE STOP LAMP SWITCH ASSY

(a) Turn the stop lamp switch assy counterclockwise and remove the stop lamp switch assy.
(b) Remove the stop lamp switch mounting adjuster from the brake pedal support sub–assy.

5. REMOVE BRAKE PEDAL PAD

(a) Remove the brake pedal pad from the brake pedal sub–assy.

6. INSTALL BRAKE PEDAL PAD

(a) Install the brake pedal pad to the brake pedal sub–assy.

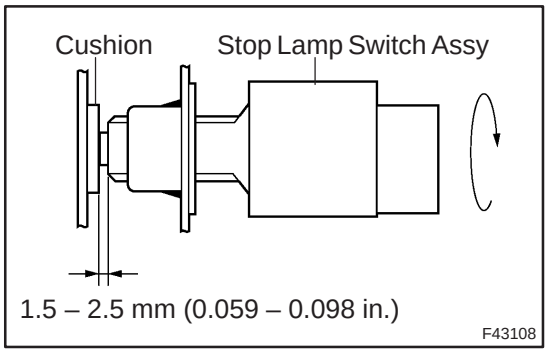

7. INSTALL STOP LAMP SWITCH ASSY

(a) Install the stop lamp switch mounting adjuster to the brake pedal support sub–assy.
(b) Install the stop lamp switch assy until the body hits the cushion.

NOTICE:

When inserting the stop lamp switch assy, support the pedal from behind so that the pedal is not pushed in.

(c) Make a quarter turn clockwise to install the stop lamp switch assy.

NOTICE:

The turning torque for installing the stop lamp switch assy.

Torque: 1.5 N·m (15 kgf·cm, 13 in.·lbf) or less

cardiagn.com

8. INSTALL BRAKE PEDAL SUB–ASSY

(a) Apply lithium soap base glycol grease to the inside surface of 2 new bushes.

(b) Install the brake pedal sub–assy and 2 bushes to the brake pedal support sub–assy with the brake pedal shaft and nut.
Torque: 37 N·m (375 kgf·cm, 27 ft·lbf)

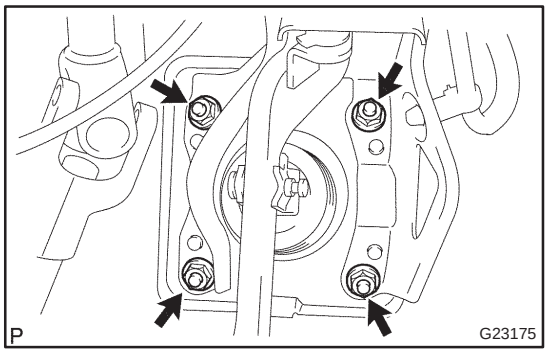

9. INSTALL BRAKE PEDAL SUPPORT SUB–ASSY

(a) Install the brake pedal support sub–assy with the 4 nuts.
Torque: 13 N·m (130 kgf·cm, 9 ft·lbf)

(b) Connect the stop lamp switch connector to the stop lamp switch assy.

(c) Apply lithium soap base glycol grease to the clevis pin.

(d) Install the clip and clevis pin, and connect the brake master cylinder push rod clevis with the clevis pin and clip.

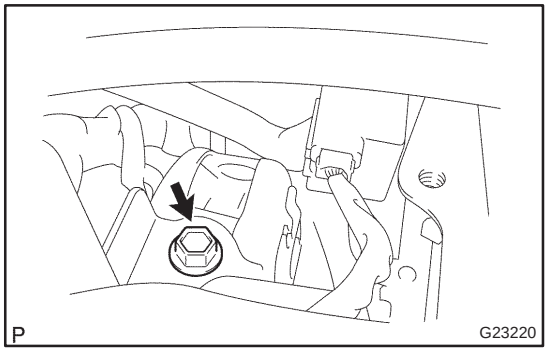

(e) Install the bolt to the brake pedal support assy.
Torque: 24 N·m (241 kgf·cm, 17 ft·lbf)

10. INSTALL COMBINATION METER ASSEMBLY (See page 71–21)

11. CHECK AND ADJUST BRAKE PEDAL HEIGHT (See page 32–6)

12. CHECK PEDAL FREE PLAY (See page 32–6)

13. CHECK PEDAL RESERVE DISTANCE (See page 32–6)

cardiagn.com

BRAKE SYSTEM

3201A–12

PRECAUTION

- **Care must be taken to replace each part properly as it could affect the performance of the brake system and result in a driving hazard. Replace the ones with parts having the same part number or equivalent.**
- **It is very important to keep the parts and the area clean when repairing the brake system.**
- **If the vehicle is equipped with a mobile communication system, refer to the precaution in the INTRODUCTION.**

cardiagn.com

3201B–12

PROBLEM SYMPTOMS TABLE

Use the table below to help you find the cause of the problem. The numbers indicate the probability of the problems in descending order. Check each part in order. If necessary, replace these parts.

Symptom	Suspect Area	See page
Low pedal or spongy pedal	3. Fluid leaks in brake system	–
	4. Air in brake system	32–4
	5. Piston seals (Worn or damaged)	32–41 32–47
	6. Brake master cylinder (faulty)	32–13
	7. Brake booster push rod (Out of adjustment)	32–13
Brake drag	1. Brake pedal free play (Minimal)	32–6
	2. Parking brake lever travel (Out of adjustment)	33–2
	3. Parking brake wire (Sticking)	33–2
	4. Disk brake pad (Cracked or distorted)	32–41 32–47
	5. Piston (Stuck or Frozen)	32–41 32–47
	6. Brake booster push rod (Out adjustment)	32–13
	7. Vacuum leaks in brake booster system	32–17 32–21
	8. Brake master cylinder (Faulty)	32–13
Brake pull	1. Piston (Stuck or Frozen)	32–41 32–47
	2. Pad or lining (Oily)	32–41 32–47
	3. Disc (Scored)	32–41 32–47
	4. Pad (Cracked or distorted)	32–41 32–47
Hard pedal but brake inefficient	1. Fluid leaks in brake system	–
	2. Air in brake system	32–4
	3. Pad (Worn)	32–41 32–47
	4. Pad (Cracked or distorted)	32–41 32–47
	5. Pad (Oily)	32–41 32–47
	6. Pad (Glazed)	32–41 32–47
	7. Disc (Scored)	32–41 32–47
	8. Booster push rod (Out of adjustment)	32–13
	9. Vacuum leaks for booster system	32–17 32–21

cardiagn.com

Noise from brakes	1. Pad (Cracked or distorted)	32–41 32–47
	2. Installation bolt (Loose)	32–41 32–47
	3. Disc (Scored)	32–41 32–47
	4. Pad support plate (Loose)	32–41 32–47
	5. Sliding pin (Worn)	32–41 32–47
	6. Pad (dirty)	32–41 32–47
	7. Pad(Glazed)	32–41 32–47

cardiagn.com

FRONT BRAKE

COMPONENTS

320GA–03

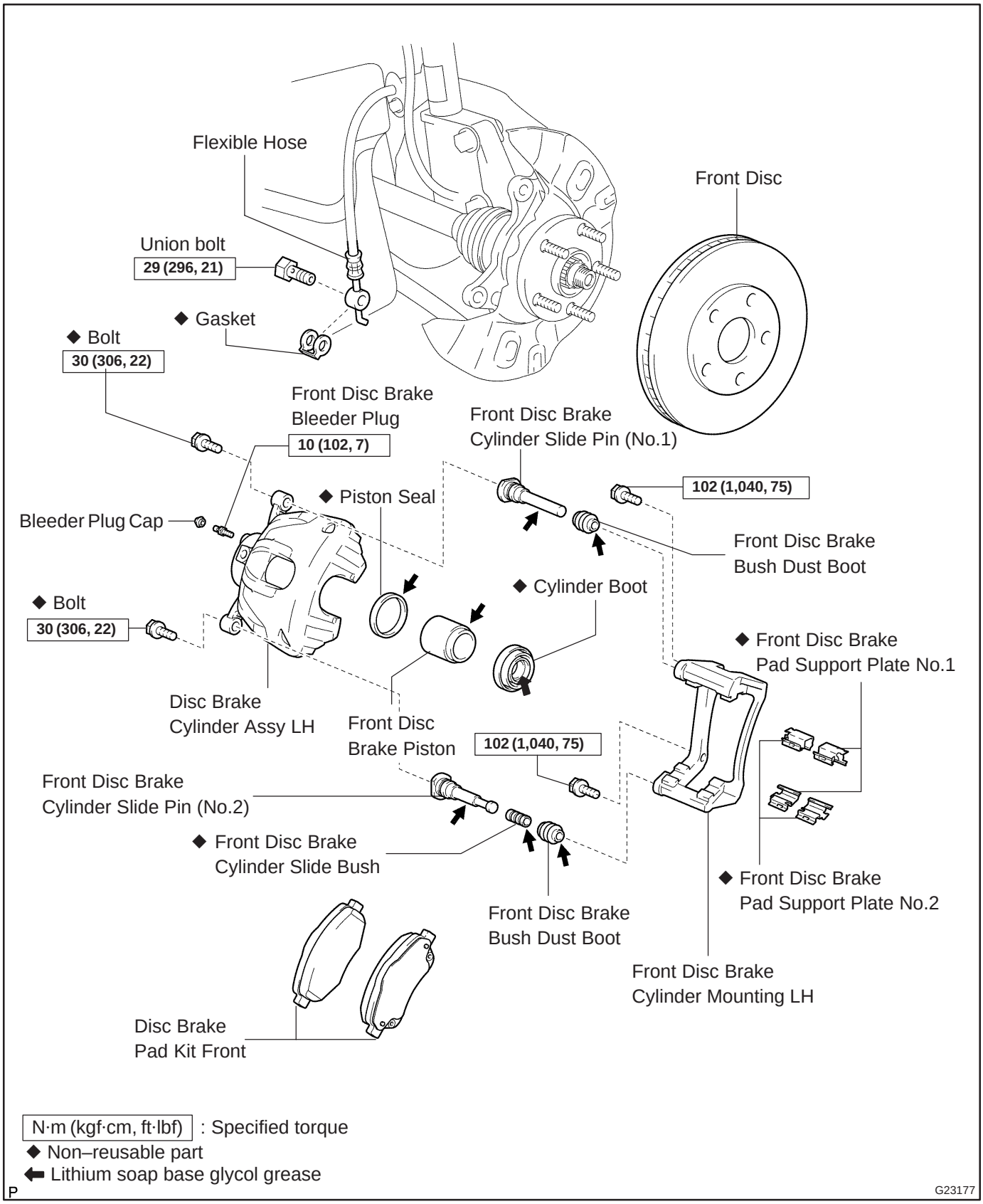

cardiagn.com

320W1–01

OVERHAUL

HINT:

Overhaul the RH side by using the same procedures as those for the LH side.

1. REMOVE FRONT WHEEL

2. DRAIN BRAKE FLUID

NOTICE:

Wash the brake fluid off immediately if it adheres to any painted surface.

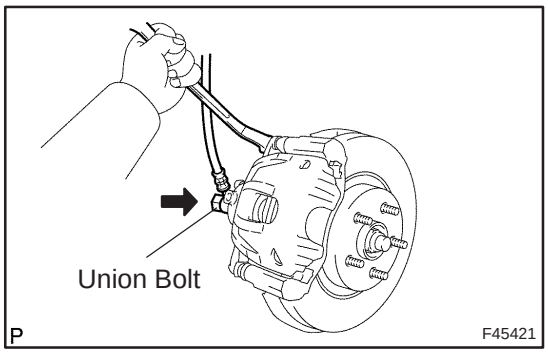

3. REMOVE DISC BRAKE CYLINDER ASSY LH

(a) Remove the union bolt and gasket from the disc brake cylinder assy LH, then disconnect the flexible hose.

(b) Hold the front disc brake cylinder slide pin and remove the 2 bolts.

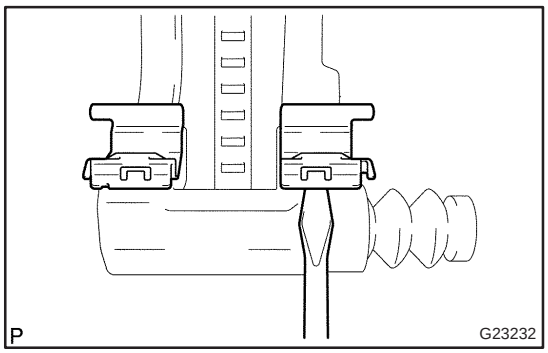

4. REMOVE FRONT DISC BRAKE PAD KIT

(a) Remove the disc brake pad kit front from the front disc brake cylinder mounting LH.

(b) Remove the 2 front disc brake pad support plates No.2 and 2 front disc brake pad support plates No.1.

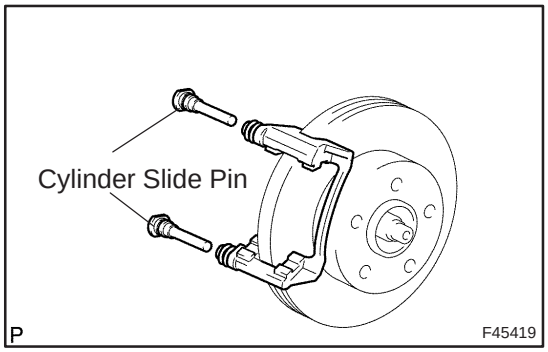

5. REMOVE FRONT DISC BRAKE CYLINDER SLIDE PIN KIT

(a) Remove the front disc brake cylinder slide pin (No.1) and front disc brake cylinder slide pin (No.2) from the front disc brake cylinder mounting LH.

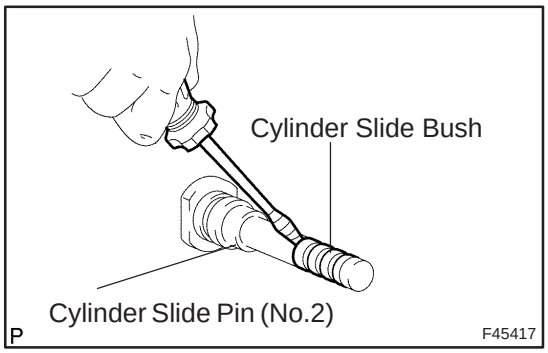

(b) Remove the front disc brake cylinder slide bush from the bottom side of the front disk brake cylinder slide pin (No.2).

cardiagn.com

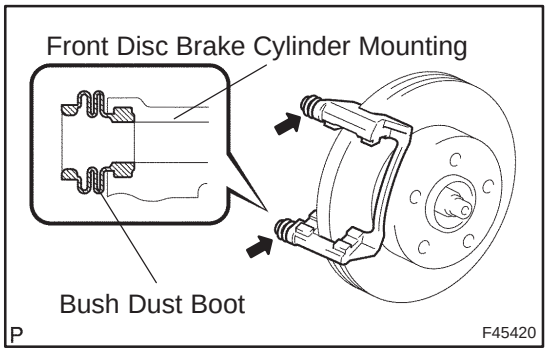

6. REMOVE FRONT DISC BRAKE BUSH DUST BOOT

(a) Remove the 2 front disc brake bush dust boots from the front disc brake cylinder mounting LH.

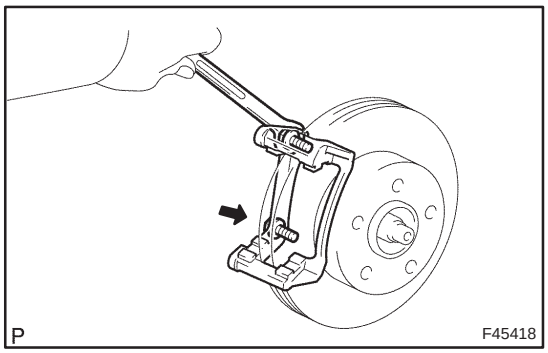

7. REMOVE FRONT DISC BRAKE CYLINDER MOUNTING LH

(a) Remove the 2 bolts and front disc brake cylinder mounting LH.

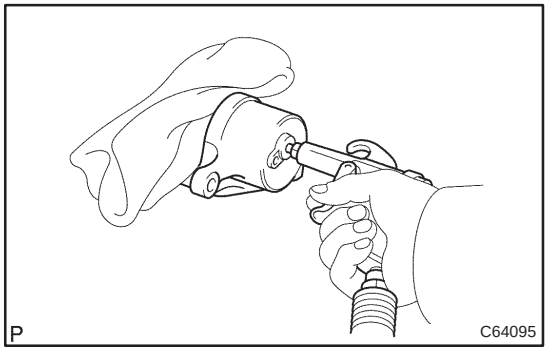

8. REMOVE FRONT DISC BRAKE PISTON

(a) Place a shop rug between the front disc brake piston and the disc brake cylinder assy LH.

(b) Use compressed air to remove the front disc brake piston from the disc brake cylinder assy LH.

CAUTION:

Do not place your fingers in front of the piston when using compressed air.

NOTICE:

Do not spatter the brake fluid.

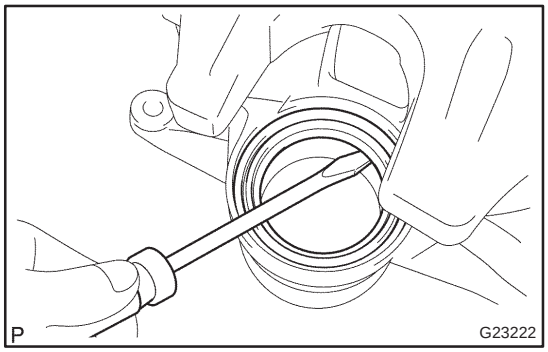

9. REMOVE CYLINDER BOOT

(a) Using a screwdriver, remove the cylinder boot.

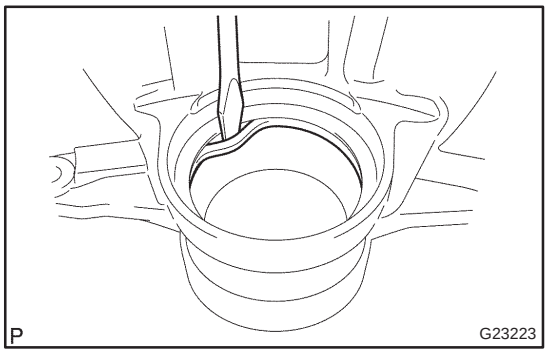

10. REMOVE PISTON SEAL

(a) Using a screwdriver, remove the piston seal.

NOTICE:

Do not damage the inner cylinder and cylinder groove.

cardiagn.com

11. REMOVE FRONT DISC BRAKE BLEEDER PLUG

(a) Remove the bleeder plug cap and front disc brake bleeder plug from the disc brake cylinder assy LH.

12. INSPECT BRAKE CYLINDER AND PISTON

(a) Check the cylinder bore and piston for rust or scoring.

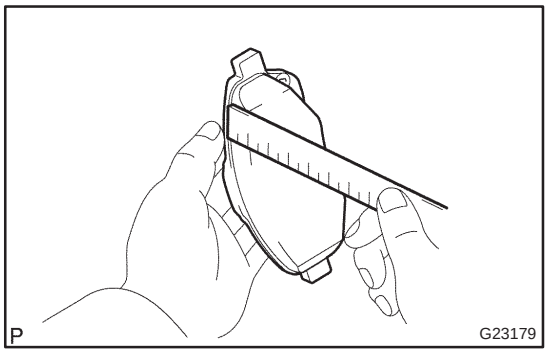

13. INSPECT FRONT DISC BRAKE PAD KIT

(a) Using a ruler, measure the disc brake pad lining thickness.
Standard thickness: 12.5 mm (0.492 in.)
Minimum thickness: 2.0 mm (0.079 in.)

(b) Inspect the 2 front disc brake pad support plates No.2 and front disc brake pad support plates No.1.
Make sure that they have sufficient rebound, no deformation, cracks nor wear, and have had all rust, dirt and foreign particles cleaned off.

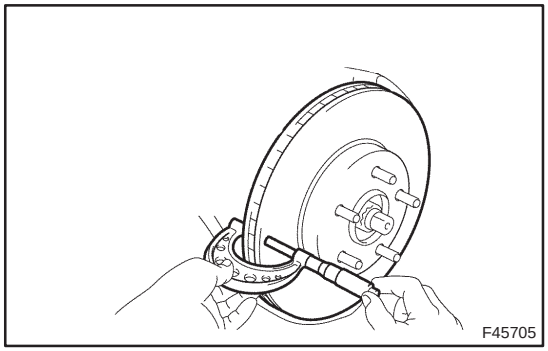

14. INSPECT DISC THICKNESS

(a) Using a micrometer, measure the front disc thickness.
Standard thickness: 26.0 mm (1.024 in.)
Minimum thickness: 24.0 mm (0.945 in.)

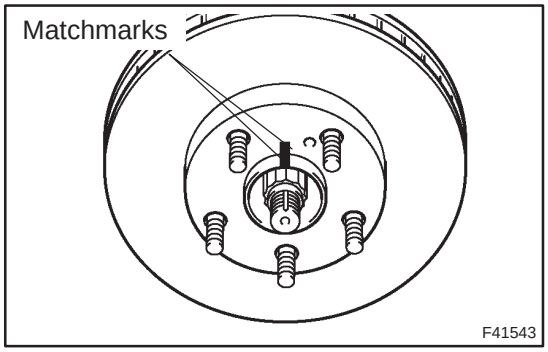

15. REMOVE FRONT DISC

(a) Place matchmarks on the front disc and the axle hub.

(b) Remove the front disc.

16. INSTALL FRONT DISC

(a) Aligning the matchmarks, install the front disc.

HINT:
Select the installation position where the disc has the minimum runout.

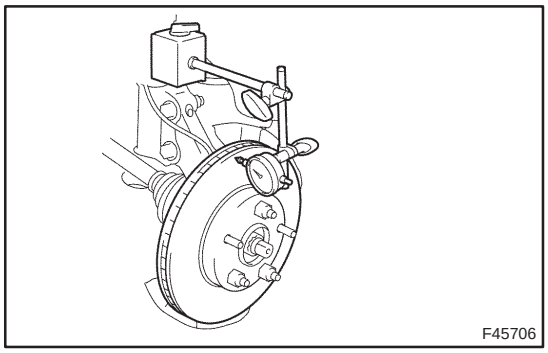

17. INSPECT DISC RUNOUT

(a) Temporarily fasten the front disc together with the hub nuts.
Torque: 103 N·m (1,050 kgf·cm, 76 ft·lbf)

(b) Using a dial indicator, measure the front disc runout 10 mm (0.39 in.) away from the outer edge of the front disc.
Maximum disc runout: 0.05 mm (0.0020 in.)

(c) If the disc's runout is maximum value or greater, check the bearing play in the axial direction and check for the axle hub runout (See page 30–2). If the bearing play and axle hub runout are normal, adjust the disc runout or grind it on a "On–car" brake lathe.

cardiagn.com

18. TEMPORARILY TIGHTEN FRONT DISC BRAKE BLEEDER PLUG

(a) Temporarily install the front disc brake bleeder plug to the disc brake cylinder assy LH.

(b) Install the bleeder plug cap to the bleeder plug.

19. INSTALL PISTON SEAL

(a) Apply lithium soap base glycol grease to a new piston seal.

(b) Install the piston seal to the disc brake cylinder assy LH.

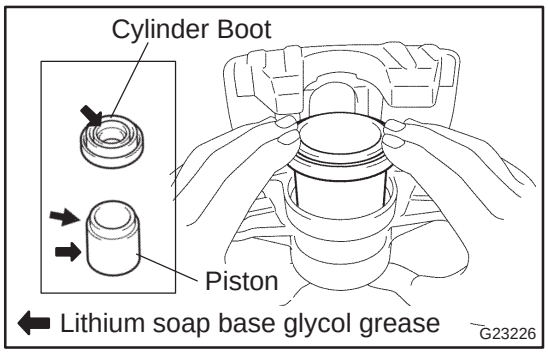

20. INSTALL FRONT DISC BRAKE PISTON

(a) Apply lithium soap base glycol grease to the front disc brake piston and a new cylinder boot.

(b) Install the cylinder boot to the front disc brake piston.

(c) Install the piston to the disc brake cylinder assy LH.

NOTICE:

Do not install the piston forcibly in the disc brake cylinder.

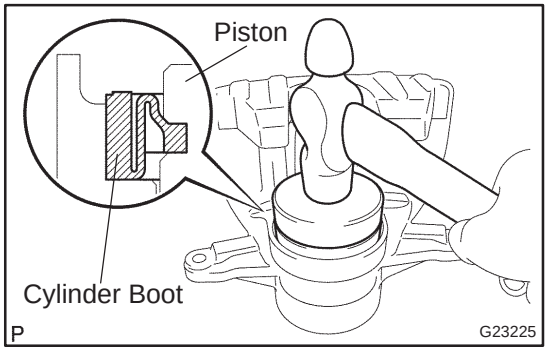

21. INSTALL CYLINDER BOOT

(a) Using SST and a hammer, install the cylinder boot to the disc brake cylinder assy LH.

SST 09550–60010

NOTICE:

Do not damage the cylinder boot.

HINT:

Install the boot securely to the disc brake cylinder assy LH.

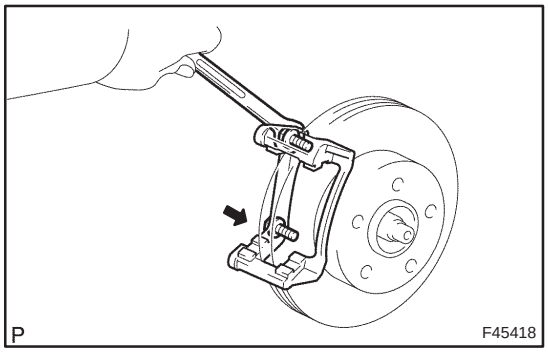

22. INSTALL FRONT DISC BRAKE CYLINDER MOUNTING LH

(a) Install the front disc brake cylinder mounting LH with the 2 bolts.

Torque: 102 N·m (1,040 kgf·cm, 75 ft·lbf)

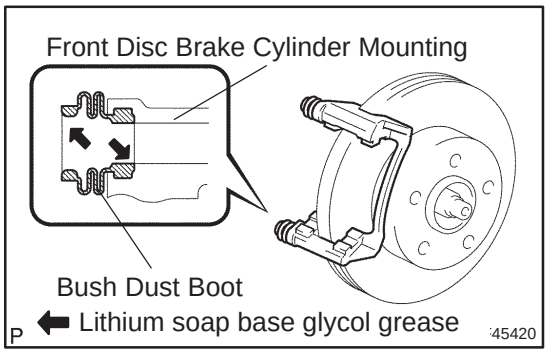

23. INSTALL FRONT DISC BRAKE BUSH DUST BOOT

(a) Apply lithium soap base glycol grease to the sealing surface of 2 new front disc brake bush dust boots.

(b) Install the 2 front disc brake bush dust boots to the front disc brake cylinder mounting LH.

cardiagn.com

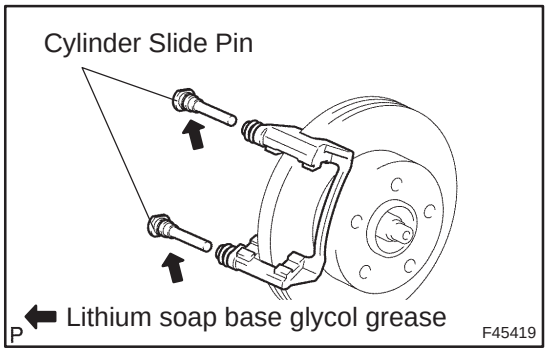

24. INSTALL FRONT DISC BRAKE CYLINDER SLIDE PIN KIT

(a) Apply lithium soap base glycol grease to the a new front disc brake cylinder slide bush.

(b) Install the front disc brake cylinder slide bush to the bottom side of the front disc brake cylinder slide pin (No.2).

(c) Apply lithium soap base glycol grease to the sliding part and the sealing surface of the 2 cylinder slide pins.

(d) Install the 2 front disc brake cylinder slide pins to the front disc brake cylinder mounting LH.

25. INSTALL FRONT DISC BRAKE PAD KIT

(a) Install the 2 front disc brake pad support plates (No.1) and 2 front disc brake pad support plates (No.2) to the front disc brake cylinder mounting LH.

(b) Install the disc brake pad kit front to the front disc brake cylinder mounting LH.

NOTICE:

There should be no oil or grease on the friction surfaces of the pads and the disc.

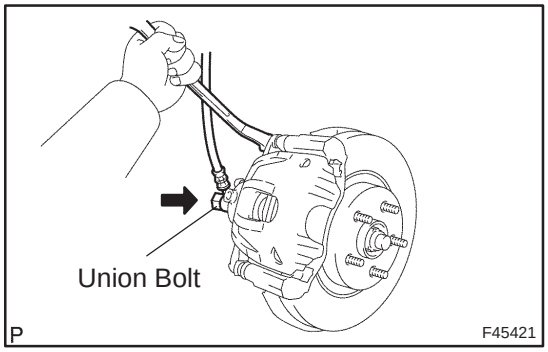

26. INSTALL DISC BRAKE CYLINDER ASSY LH

(a) Install the disc brake cylinder assy LH with the 2 bolts.
Torque: 30 N·m (306 kgf·cm, 22 ft·lbf)

(b) Install a new gasket and flexible hose with the union bolt.
Torque: 29 N·m (296 kgf·cm, 21 ft·lbf)

HINT:

Install the flexible hose lock securely in the lock hole in the disc brake cylinder assy LH.

27. FILL RESERVOIR WITH BRAKE FLUID (See page 32–4)

28. BLEED MASTER CYLINDER (See page 32–4)

(a) w/o VSC:
SST 09023–00100

(b) w/ VSC:
SST 09023–38400

29. BLEED BRAKE LINE (See page 32–4)

30. CHECK FLUID LEVEL IN RESERVOIR (See page 32–4)

31. CHECK BRAKE FLUID LEAKAGE

32. INSTALL FRONT WHEEL
Torque: 103 N·m (1,050 kgf·cm, 76 ft·lbf)

cardiagn.com

REAR DISC BRAKE

COMPONENTS

320GE–03

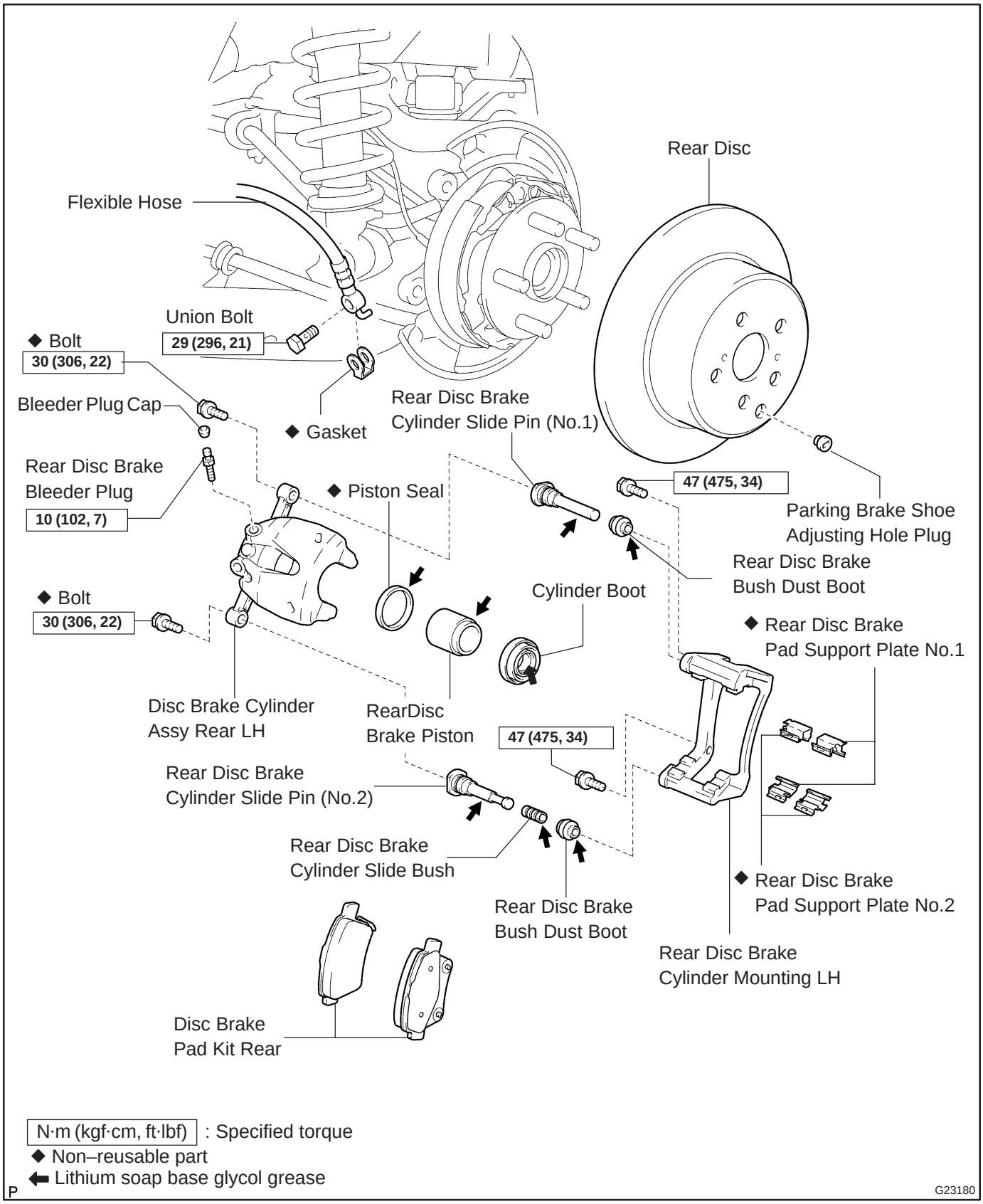

cardiagn.com

320W0–01

OVERHAUL

HINT:

Overhaul the RH side by using the same procedures as those for the LH side.

1. REMOVE REAR WHEEL

2. DRAIN BRAKE FLUID

NOTICE:

Wash the brake fluid off immediately if it adheres to any painted surface.

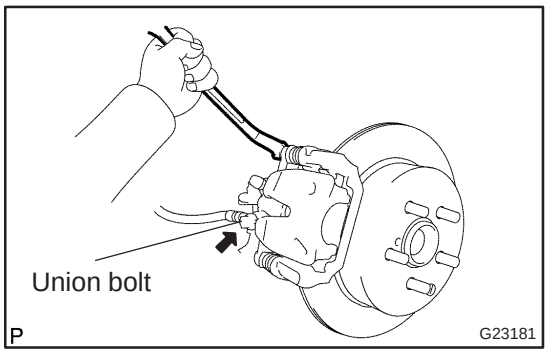

3. REMOVE DISC BRAKE CYLINDER ASSY REAR LH

(a) Remove the union bolt and gasket from the brake cylinder assy rear LH, then disconnect the flexible hose from the disc brake cylinder assy rear LH.

(b) Hold the rear disc brake cylinder slide pin and remove the 2 bolts.

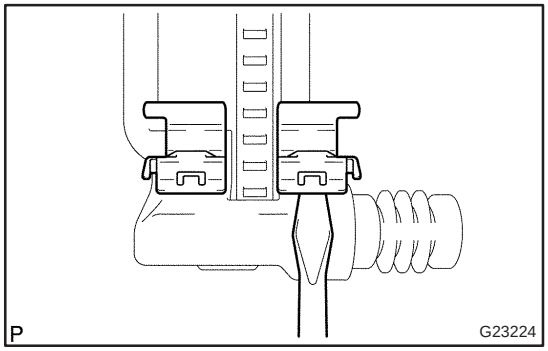

4. REMOVE REAR DISC BRAKE PAD KIT

(a) Remove the disc brake pad kit rear.

(b) Remove the 2 rear disc brake pad support plates No.1 and 2 rear disc brake pad support plates No.2 from the rear disc brake cylinder mounting LH.

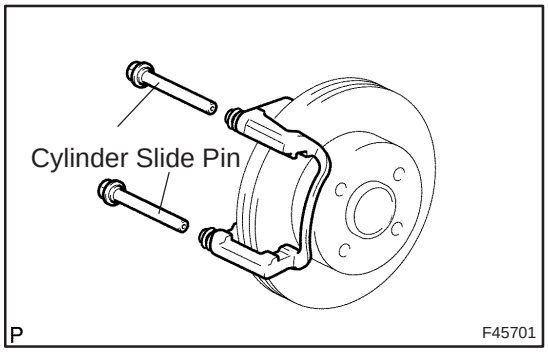

5. REMOVE REAR DISC BRAKE CYLINDER SLIDE PIN KIT

(a) Remove the rear disc brake cylinder slide pin (No.1) and rear disc brake cylinder slide pin (No.2) from the disc brake cylinder mounting LH.

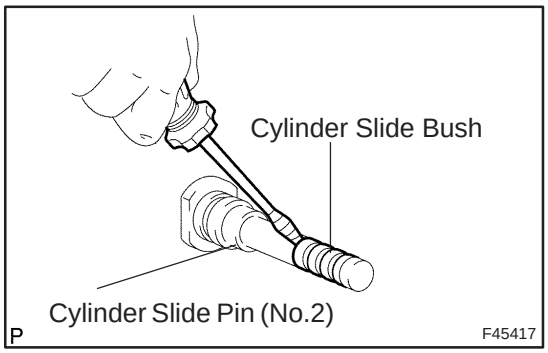

(b) Remove the rear disc brake cylinder slide bush from the bottom side of the rear disc brake cylinder slide pin (No.2).

cardiagn.com

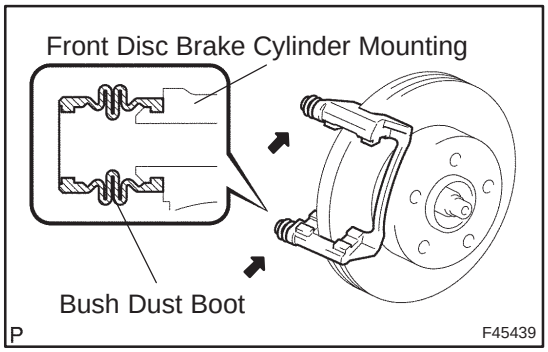

6. REMOVE REAR DISC BRAKE BUSH DUST BOOT

(a) Remove the 2 rear disc brake bush dust boots from the rear disc brake cylinder mounting LH.

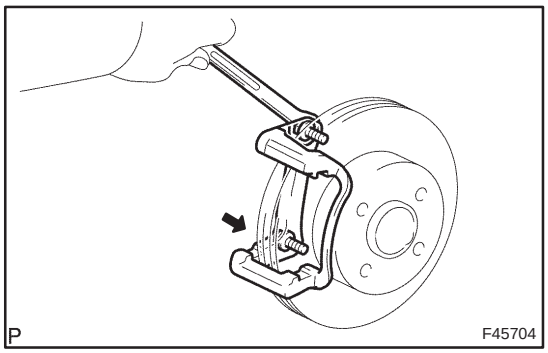

7. REMOVE REAR DISC BRAKE CYLINDER MOUNTING LH

(a) Remove the 2 bolts and rear disc brake cylinder mounting LH.

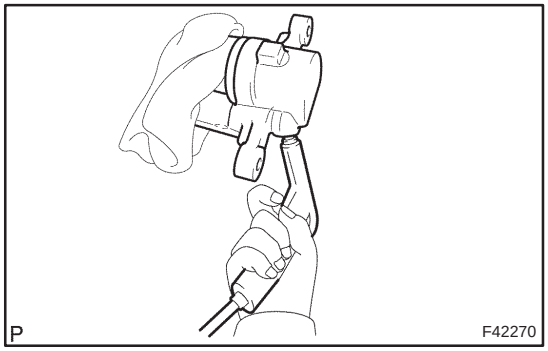

8. REMOVE REAR DISC BRAKE PISTON

(a) Place a shop rug between the rear disc brake piston and the disc brake cylinder assy rear LH.

(b) Use compressed air to remove the rear disc brake piston from the disc brake cylinder assy rear LH.

CAUTION:

Do not place your fingers in front of the piston when using compressed air.

NOTICE:

Do not spatter the brake fluid.

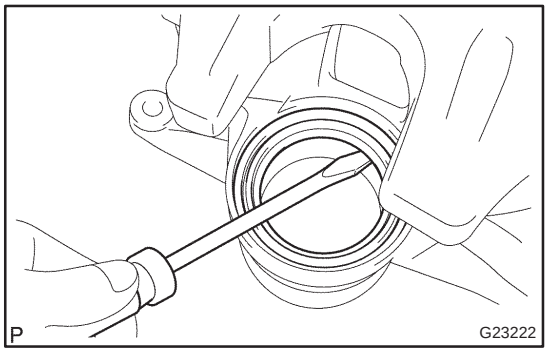

9. REMOVE CYLINDER BOOT

(a) Using a screwdriver, remove the cylinder boot.

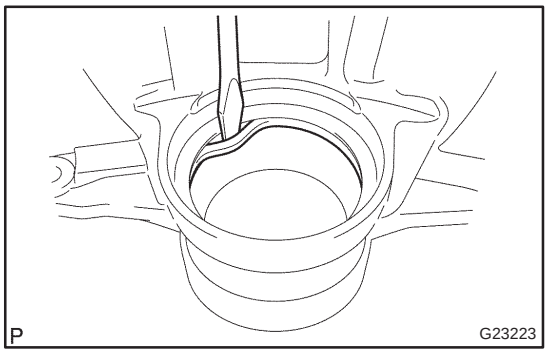

10. REMOVE PISTON SEAL

(a) Using a screwdriver, remove the piston seal.

NOTICE:

Do not damage the inner cylinder and cylinder groove.

cardiagn.com

11. REMOVE REAR DISC BRAKE BLEEDER PLUG

(a) Remove the bleeder plug cap and rear disc brake bleeder plug from the disc brake cylinder assy raer LH.

12. INSPECT BRAKE CYLINDER AND PISTON

(a) Check the cylinder bore and piston for rust or scoring.

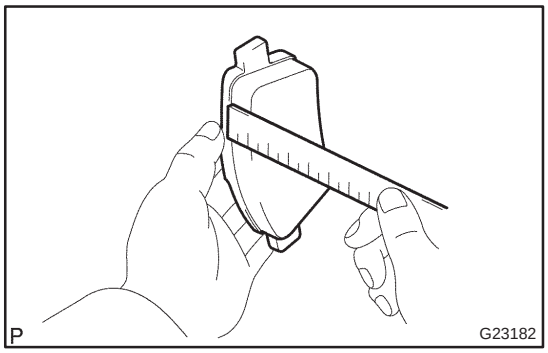

13. INSPECT REAR DISC BRAKE PAD KIT

(a) Using a ruler, measure the disc brake pad lining thickness.
Standard thickness: 10.0 mm (0.394 in.)
Minimum thickness: 2.0 mm (0.079 in.)

(b) Inspect the 2 rear disc brake pad support plates No.1 and 2 rear disc brake pad support plates No.2. Make sure that they have sufficient rebound, no deformation cracks or wear, and have had all rust, dirt and foreign particles cleaned off.

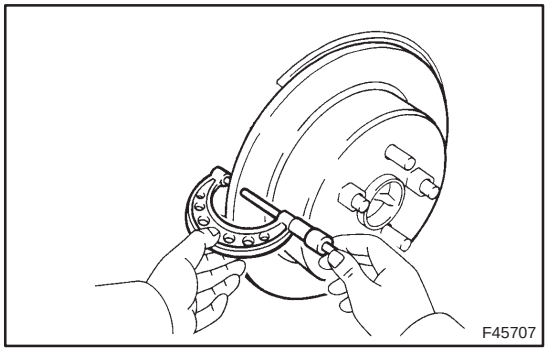

14. INSPECT DISC THICKNESS

(a) Using a micrometer, measure the rear disc thickness.
Standard thickness: 10.0 mm (0.394 in.)
Minimum thickness: 9.0 mm (0.354 in.)

15. REMOVE PARKING BRAKE SHOE ADJUSTING HOLE PLUG

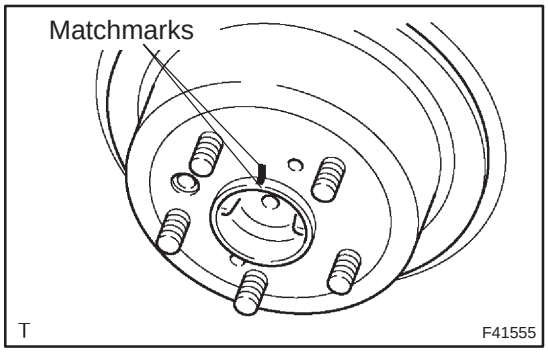

16. REMOVE REAR DISC

(a) Place matchmarks on the rear disc and the axle hub.

(b) Remove the rear disc.

17. INSTALL REAR DISC

(a) Aligning the matchmarks, install the rear disc.

HINT:
Select the installation position where the rear disc has the minimum runout.

18. INSTALL PARKING BRAKE SHOE ADJUSTING HOLE PLUG

cardiagn.com

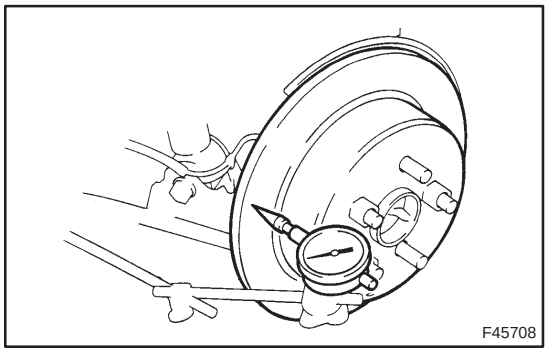

19. INSPECT DISC RUNOUT

(a) Temporarily fasten the rear disc with the hub nuts.
Torque: 103 N·m (1,050 kgf·cm, 76 ft·lbf)

(b) Using a dial indicator, measure the disc runout 10 mm (0.39 in.) away from the outer edge of the rear disc.
Maximum disc runout: 0.15 mm (0.0059 in.)

(c) If the disc runout is maximum value or greater, check the bearing play in the axial direction and check for the axle hub runout (See page 30–2). If the bearing play and axle hub runout are normal, adjust the disc runout or grind it on a ”On–car” brake lathe.

20. TEMPORARILY TIGHTEN REAR DISC BRAKE BLEEDER PLUG

(a) Temporarily install the rear disc brake bleeder plug to the disc brake cylinder assy rear LH.

21. INSTALL PISTON SEAL

(a) Apply the lithium soap base glycol grease to a new piston seal.

(b) Install the piston seal to the disc brake cylinder assy rear LH.

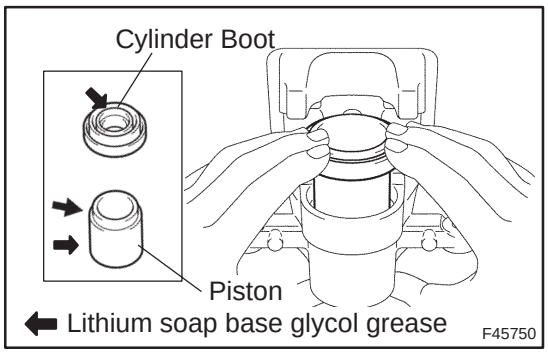

22. INSTALL REAR DISC BRAKE PISTON

(a) Apply lithium soap base glycol grease to the rear disc brake piston and a new cylinder boot.

(b) Install the cylinder boot to the rear disc brake piston.

(c) Install the piston to the disc brake cylinder assy LH.

NOTICE:

Do not install the piston forcibly in the disc brake cylinder.

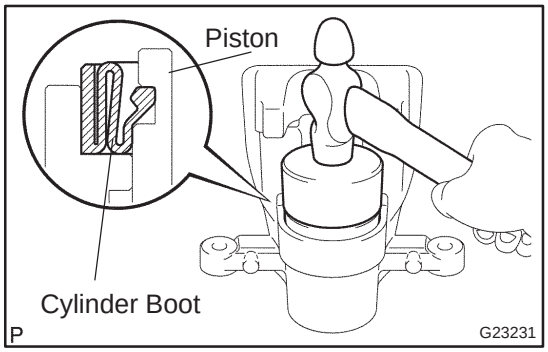

23. INSTALL CYLINDER BOOT

(a) Using SST and a hammer, install the cylinder boot to the disc brake cylinder assy rear LH.
SST 09710–06051

NOTICE:

Do not damage the cylinder boot.

HINT:

Install the boot securely to the disc brake cylinder rear LH.

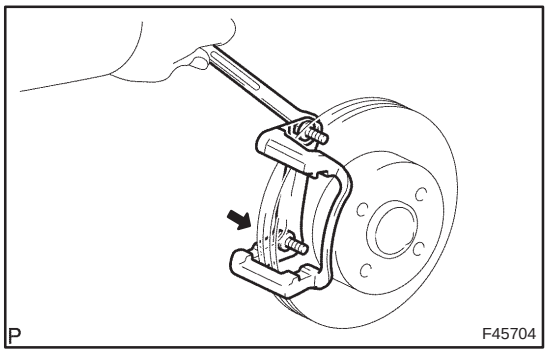

24. INSTALL REAR DISC BRAKE CYLINDER MOUNTING LH

(a) Install the rear disc brake cylinder mounting LH with the 2 bolts.
Torque: 47 N·m (475 kgf·cm, 34 ft·lbf)

cardiagn.com

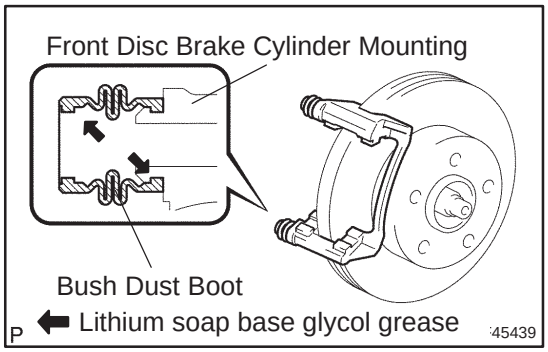

25. INSTALL REAR DISC BRAKE BUSH DUST BOOT

(a) Apply lithium soap base glycol grease to the sealing surface of 2 new bush dust boots.

(b) Install the 2 bush dust boots to the rear disc brake cylinder mounting LH.

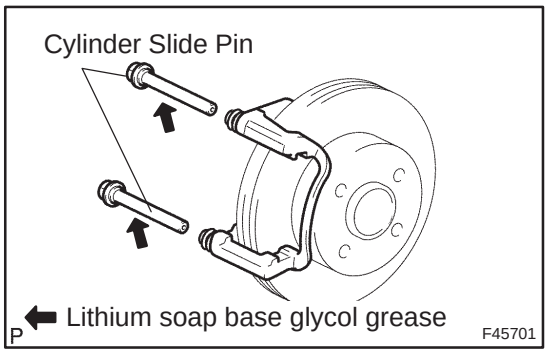

26. INSTALL REAR DISC BRAKE CYLINDER SLIDE PIN KIT

(a) Apply lithium soap base glycol grease to sealing surface of a new cylinder slide bush.

(b) Install the rear disc brake cylinder slide bush to the bottom side of the rear disc brake cylinder slide pin (No.2).

(c) Apply lithium soap base glycol grease to the sliding part and the sealing surface of the 2 rear disc brake cylinder slide pins.

(d) Install the rear disc brake cylinder slide pin (No.1) and rear disc brake cylinder slide pin (No.2) to the rear disc brake cylinder mounting LH.

27. INSTALL REAR DISC BRAKE PAD KIT

(a) Install the 2 rear disc brake pad support plates No.1 and 2 rear disc brake pad support plate No.2 to the rear disc brake cylinder mounting LH.

(b) Install the disc brake pad kit rear to the disc brake cylinder mounting LH.

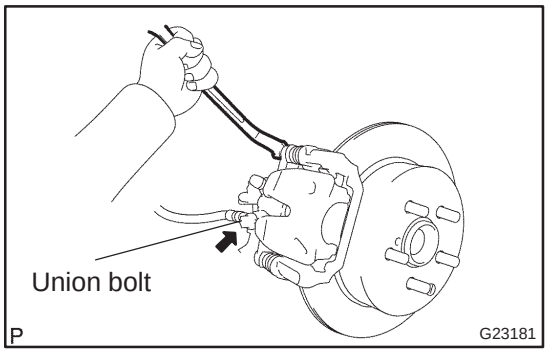

28. INSTALL DISC BRAKE CYLINDER ASSY REAR LH

(a) Install the disc brake cylinder assy rear LH with the 2 bolts.
Torque: 30 N·m (306 kgf·cm, 22 ft·lbf)

(b) Install a new gasket and flexible hose with the union bolt.
Torque: 29 N·m (296 kgf·cm, 21 ft·lbf)

HINT:
Install the flexible hose lock securely in to the lock hole in the disc brake cylinder assy rear LH.

29. FILL RESERVOIR WITH BRAKE FLUID (See page 32–4)

30. BLEED MASTER CYLINDER (See page 32–4)

(a) w/o VSC:
SST 09023–00100

(b) w/ VSC:
SST 09023–38400

31. BLEED BRAKE LINE (See page 32–4)

32. CHECK FLUID LEVEL IN RESERVOIR (See page 32–4)

cardiagn.com

33. CHECK BRAKE FLUID LEAKAGE

34. INSTALL REAR WHEEL

Torque: 103 N·m (1,050 kgf·cm, 76 ft·lbf)

cardiagn.com

SKID CONTROL SENSOR

320VV–01

REPLACEMENT

HINT:
Replace the RH side by using the same procedures as those for the LH side.

1. REMOVE REAR WHEEL

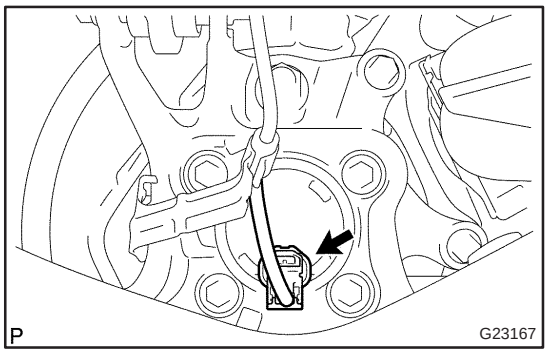

2. DISCONNECT SKID CONTROL SENSOR WIRE

(a) Disconnect the connector from the skid control sensor.

3. REMOVE REAR DISC BRAKE CALIPER ASSY LH

(a) Remove the 2 bolts and rear brake caliper assy LH.

4. REMOVE REAR DISC

(a) place matchmarks on the rear disc and the axle hub.

(b) Remove the rear disc.

5. REMOVE REAR AXLE HUB & BEARING ASSY LH (See page 30–31)

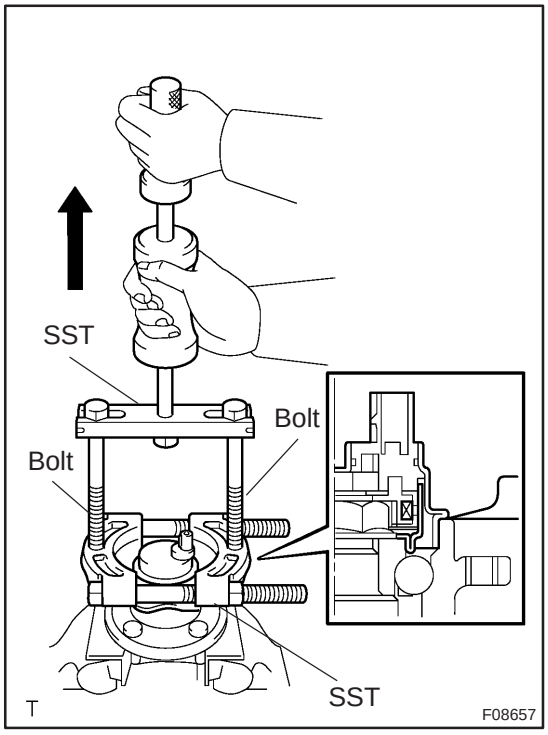

6. REMOVE SKID CONTROL SENSOR

(a) Mount the rear axle hub in a soft jaw vise.

NOTICE:

Replace the axle hub assembly if it is dropped or receives a strong shock.

(b) Using a pin punch and hammer, drive out the 2 pins and remove the 2 attachments from SST.

(c) Using SST and 2 bolts (Diameter: 12 mm, pitch: 1.5 mm), remove the skid control sensor from the rear axle hub.

SST 09520–00031 (09520–00040), 09521–00020, 09950–00020

NOTICE:

- **If the sensor rotor is damaged, replace the axle hub assembly.**
- **Do not scratch the contacting surface of the axle hub and speed sensor.**

cardiagn.com

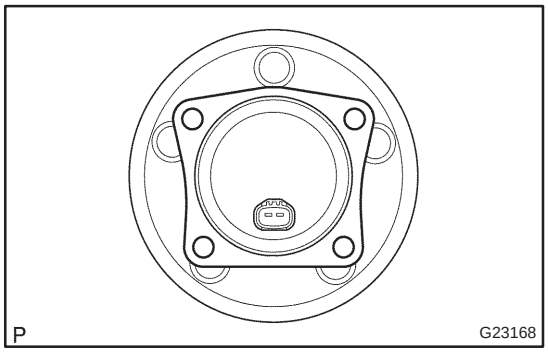

7. INSTALL SKID CONTROL SENSOR

(a) Clean the contacting surface of the axle hub and that of a new skid control sensor.

NOTICE:

Make sure the sensor rotor is clean.

(b) Place the skid control sensor on the axle hub so that the connector comes into the most downward position under the on vehicle condition.

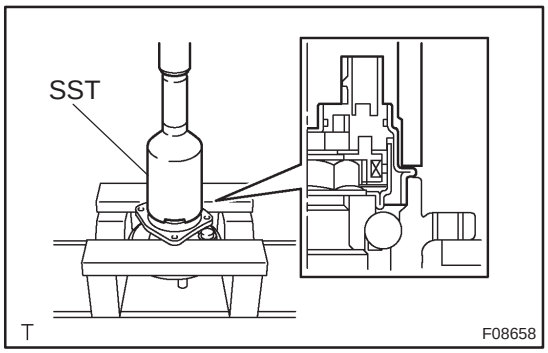

(c) Using SST and a press, install the skid control sensor to the axle hub.

NOTICE:

- **Do not tap the skid control sensor directly with a hammer.**
- **Check that there is no foreign matter on the skid control sensor detection portion.**
- **Press in the skid control sensor straight and slowly.**

SST 09830–36010, 09950–60010 (09951–00650), 09950–70010 (09951–07100)

8. INSTALL REAR AXLE HUB & BEARING ASSY LH (See page 30–31)

9. INSTALL REAR BRAKE DRUM SUB–ASSY

(a) Aligning the matchmarks, install the rear disc.

10. INSTALL REAR DISC BRAKE CALIPER ASSY LH

(a) Install the rear disc brake caliper assy LH with the 2 bolts.
Torque: 47 N·m (475 kgf·cm, 34 ft·lbf)

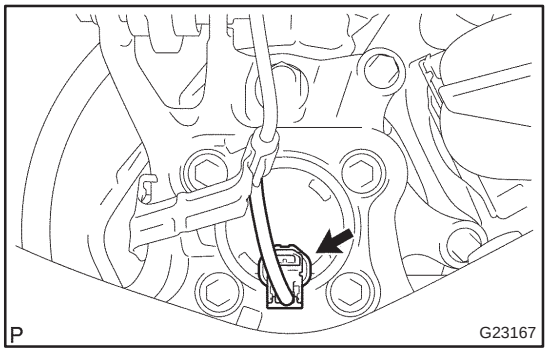

11. CONNECT SKID CONTROL SENSOR WIRE

(a) Connect the connector from the skid control sensor.

12. INSTALL REAR WHEEL
Torque: 103 N·m (1,050 kgf·cm, 76 ft·lbf)

13. INSPECT AND ADJUST REAR WHEEL ALIGNMENT (See page 27–4)

14. CHECK ABS SPEED SENSOR SIGNAL (See page 05–699)

cardiagn.com

SPEED SENSOR FRONT LH

3201P–05

REPLACEMENT

HINT:
Replace the RH side by using the same procedures as those for the LH side.

1. REMOVE FRONT WHEEL

2. REMOVE FRONT FENDER LINER LH

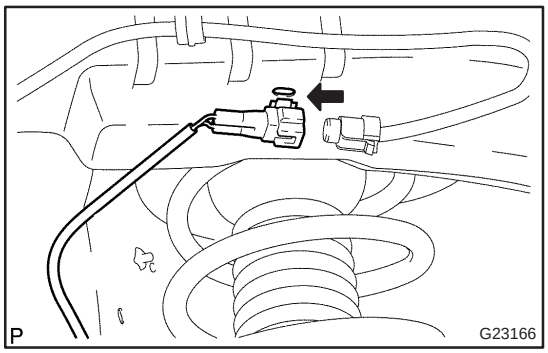

3. REMOVE SPEED SENSOR FRONT LH

(a) Disconnect the resin clip and speed sensor wire harness from the body and clamp.

(b) Disconnect the speed sensor connector.

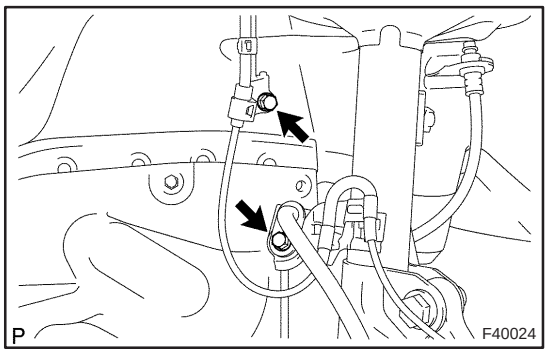

(c) Remove the 2 clamp bolts holding the sensor harness from the body and shock absorber.

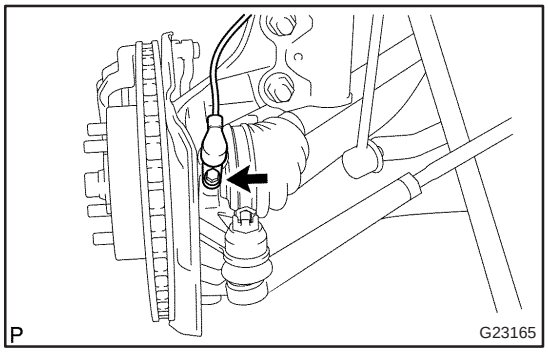

(d) Remove the bolt and separate the speed sensor front LH.

NOTICE:

Prevent foeingn matter from attaching to the sensor tip.

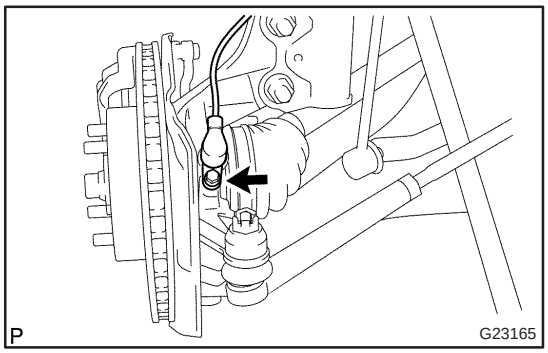

4. INSTALL SPEED SENSOR FRONT LH

(a) Install the speed sensor front LH with the bolt.
Torque: 8.0 N·m (82 kgf·cm, 71 in.·lbf)

NOTICE:

Prevent foeingn matter from attaching to the sensor tip.

cardiagn.com

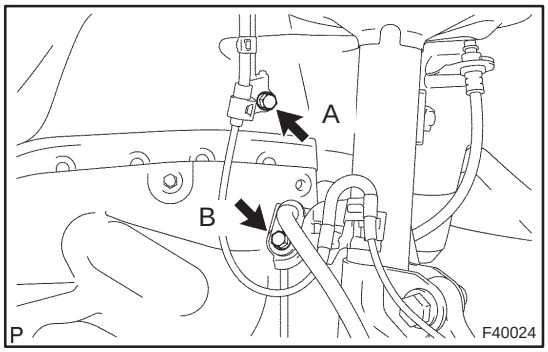

(b) Install the sensor harness clamp with the 2 bolts ”A” and ”B” to the body and shock absorber.
Torque:
Bolt A: 8.0 N·m (82 kgf·cm, 71 in.·lbf)
Bolt B: 29 N·m (296 kgf·cm, 21 ft·lbf)

NOTICE:
Do not twist the sensor wire when installing the sensor.

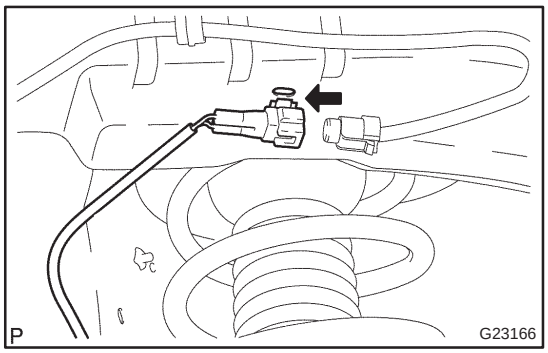

(c) Connect the speed sensor connector.
(d) Connect the resin clip and speed sensor wire harness to the body and clamp.

5. INSTALL FRONT FENDER LINER LH
6. INSTALL FRONT WHEEL
Torque: 103 N·m (1,050 kgf·cm, 76 ft·lbf)
7. CHECK ABS SPEED SENSOR SIGNAL (See page 05–699)

cardiagn.com

STEERING SENSOR

320G5–02

REPLACEMENT

1. PRECAUTION (See page 60–1)
2. REMOVE PLACE FRONT WHEELS FACING STRAIGHT AHEAD
3. DISCONNECT BATTERY NEGATIVE TERMINAL (See page 60–1)
4. REMOVE HORN BUTTON ASSY (See page 60–17)
5. REMOVE STEERING WHEEL ASSY (See page 50–9)
6. REMOVE STEERING COLUMN COVER LWR (See page 50–9)
7. REMOVE STEERING COLUMN COVER W/INSTRUMENT CLUSTER FINISH PANEL ASSY (See page 50–9)
8. REMOVE STEERING COLUMN ASSY(See page 50–9)
9. REMOVE STEERING INTERMEDIATE SHAFT ASSY NO.2 (See page 50–9)

10. REMOVE STEERING SENSOR

(a) Place the steering column assy on the V–blocks and rubber stick.

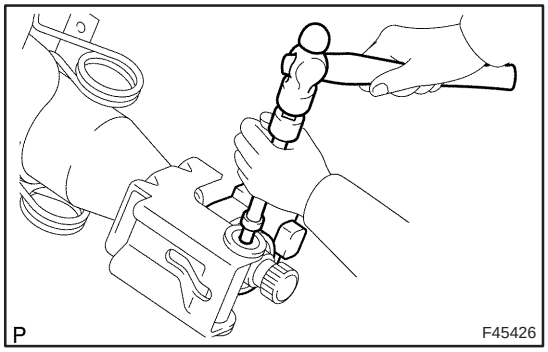

(b) Using a extension bar and hammer, remove the steering column bracket spacer and 2 tilt steering support collar No.1 from the steering column assy.

NOTICE:

- **During this procedure, do not apply the strong shock to the steering sensor.**
- **Do not apply any oil or grease on the pin.**

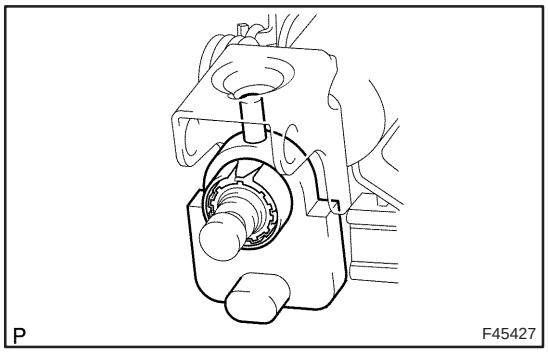

(c) Using a screwdriver, remove the bush from the steering column assy.

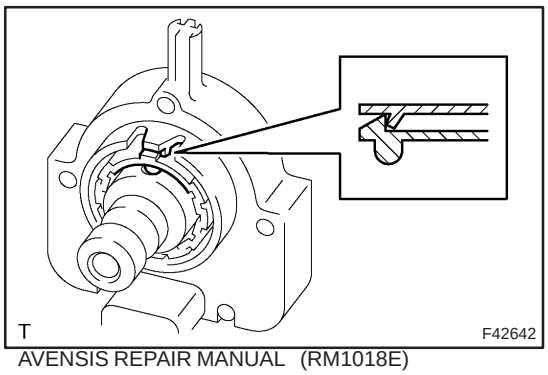

(d) Disconnect the pick on the steering sensor and steering sensor adapter, then remove the steering sensor from the column shaft.

(e) Remove the steering sensor adapter.

cardiagn.com

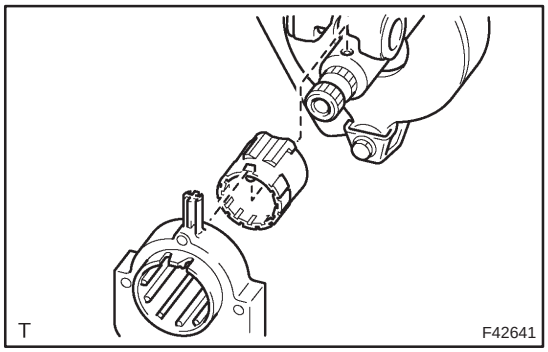

11. INSTALL STEERING SENSOR

(a) Install the steering sensor adapter to the column shaft.

HINT:

At that time, the projection of the steering sensor adapter should be fit in the hole on the steering column shaft.

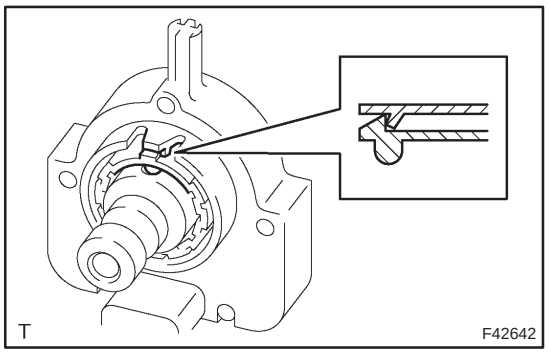

(b) Install the steering sensor to the column shaft.

HINT:

- At that time, the pick of the steering sensor should be fit to the pick of the steering sensor adapter.
- After installation, make sure the steering sensor is fixed securely in the steering sensor adapter.

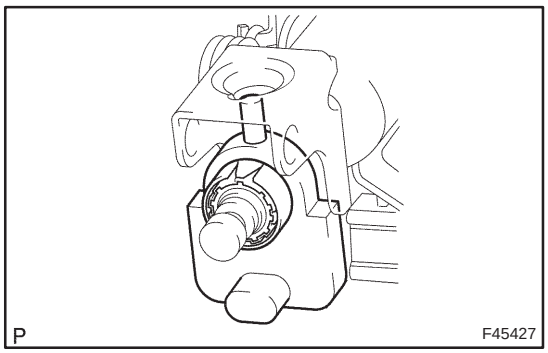

(c) Place the steering column assy on the V–blocks and rubber stick.

(d) Install the 2 new tilt steering support collar No.1 to the steering column assy.

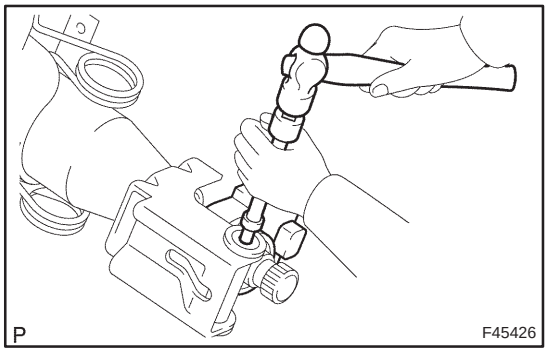

(e) Using a extension bar and hammer, install the steering column bracket spacer to the steering column assy.

NOTICE:

- **During this procedure, do not apply the strong shock to the steering sensor.**
- **Do not apply any grease or oil on the pin.**

12. INSTALL STEERING INTERMEDIATE SHAFT ASSY NO.2 (See page 50–9)
13. INSTALL STEERING COLUMN ASSY (See page 50–9)
14. INSTALL SPIRAL CABLE SUB–ASSY (See page 60–26)
15. INSTALL STEERING COLUMN COVER W/INSTRUMENT CLUSTER FINISH PANEL ASSY (See page 50–9)
16. INSTALL STEERING COLUMN COVER LWR (See page 50–9)
17. INSTALL STEERING WHEEL ASSY (See page 50–9)
18. INSPECT STEERING WHEEL CENTER POINT
19. INSTALL HORN BUTTON ASSY (See page 60–17)

cardiagn.com

20. CONNECT BATTERY NEGATIVE TERMINAL (See page 60–1)
21. INSPECT SRS WARNING LIGHT (See page 05–1184)
22. INSPECT ABS WARNING LIGHT AND VSC WARNING LIGHT (See page 05–756)

cardiagn.com

VACUUM PUMP ASSY (1CD–FTV)

32091–05

ON–VEHICLE INSPECTION

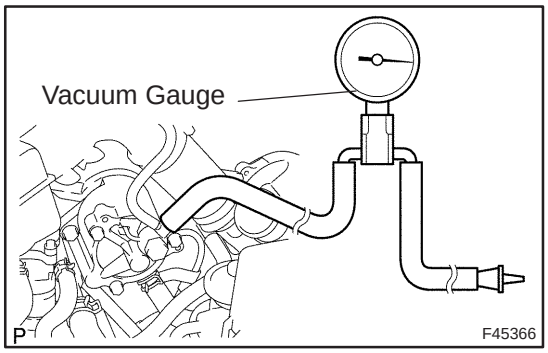

1. OPERATIONING CHECK

(a) Slide the clip, then disconnect the vacuum hose from vacuum pump assy.

(b) Connect the hose of the vacuum gauge to the vacuum pump assy.

(c) Block off another hose of the vacuum gauge with the hose clamp No.2.

(d) Start the engine and warm it up for more than 2 minutes.

(e) With the engine idle, check the negative pressure of the vacuum pump assy.
Standard: More than 650 mmHg (86.7 kPa).

(f) Remove the vacuum gauge from the vacuum pump assy.

(g) Connect the vacuum hose with the clip to the vacuum pump assy.

cardiagn.com

32092–05

COMPONENTS

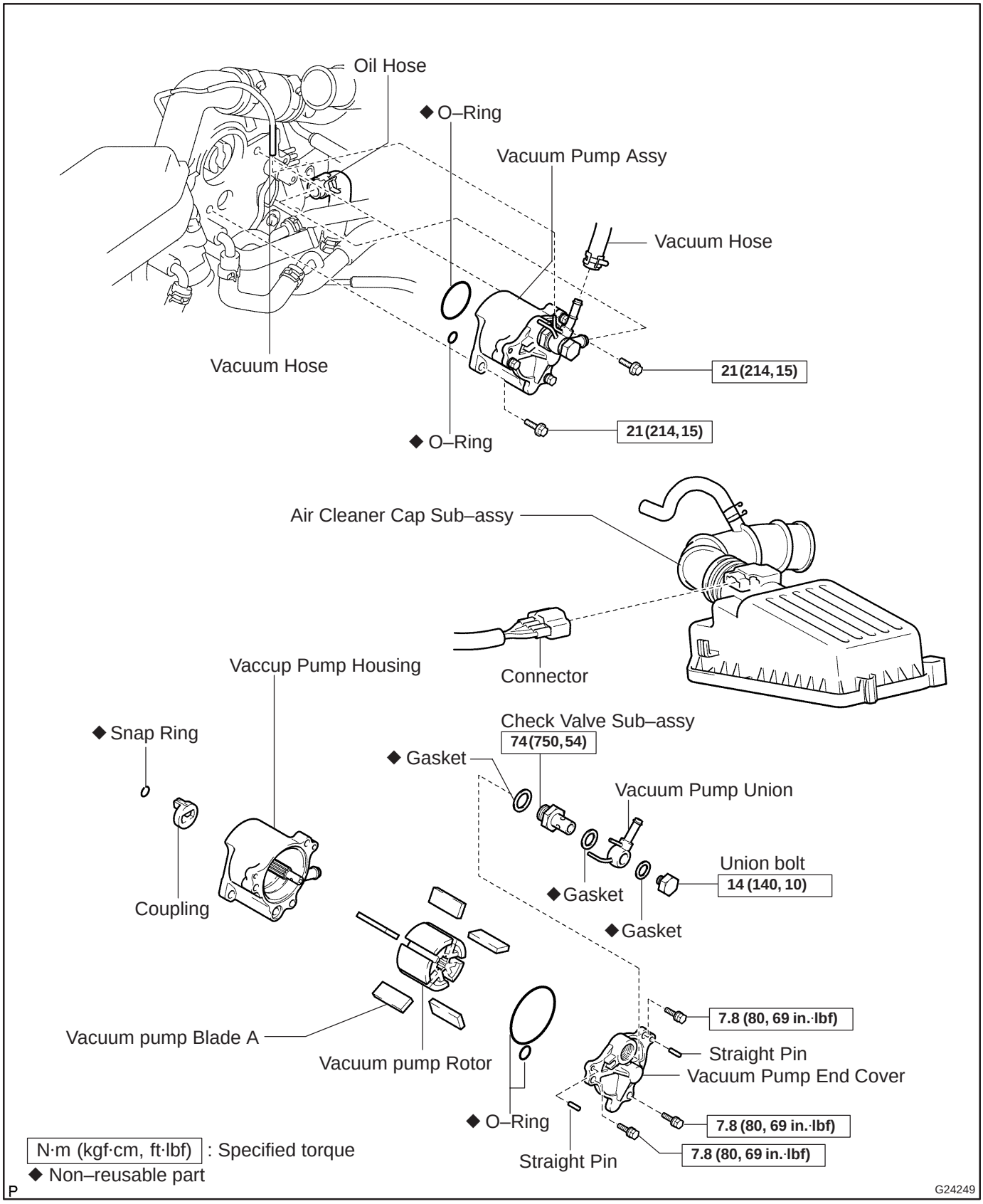

cardiagn.com

OVERHAUL

1. REMOVE AIR CLEANER CAP SUB–ASSY

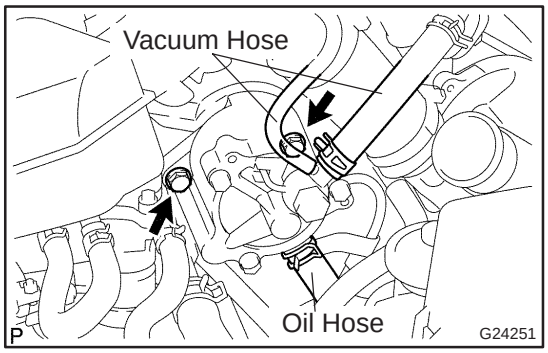

2. REMOVE VACUUM PUMP ASSY

(a) Disconnect the 2 vacuum hoses and oil hose from the vacuum pump assy.

(b) Remove the 2 bolts and vacuum pump assy.

(c) Remove the 2 O–rings from the vacuum pump assy.

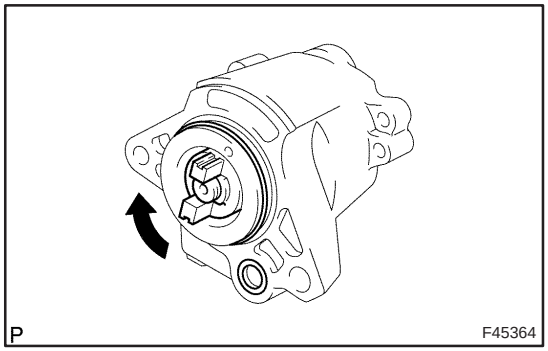

3. INSPECT VACUUM PUMP ASSY

(a) Turn the coupling counterclockwise direction by hand when seeing from the coupling direction and check for any abnormality such as dragging or torque fluctuation.

NOTICE:

Pay coupling attention, because the engine oil remained in the pump escapes while coupling is turning.

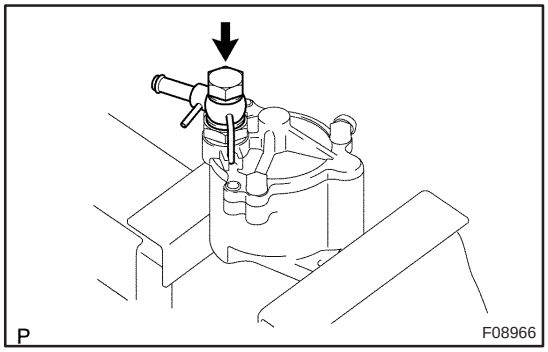

4. REMOVE VACUUM PUMP UNION

(a) Using soft jaws on a vise, hold the vacuum pump assy in a vise.

NOTICE:

Do not tighten the vise excessively and perform the work while holding the vacuum pump assy by hand.

(b) Remove the union bolt, vacuum pump union and 2 gaskets.

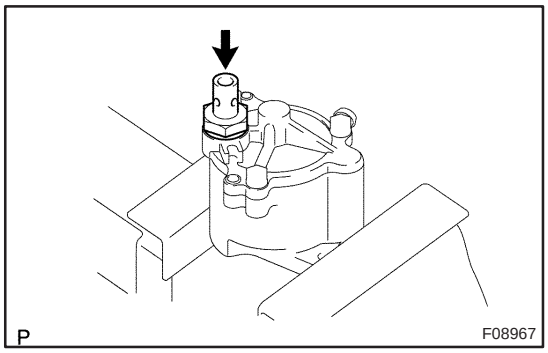

5. REMOVE CHECK VALVE SUB–ASSY

(a) Remove the check valve sub–assy and gasket.

cardiagn.com

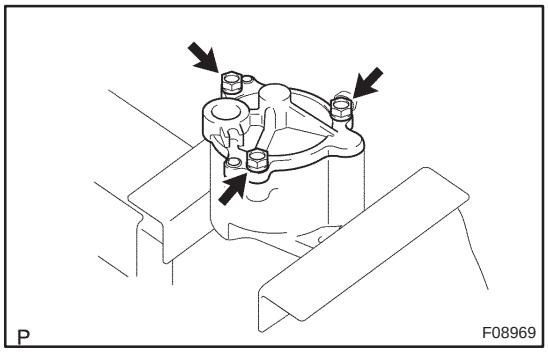

6. REMOVE VACUUM PUMP ROTOR SUB–ASSY

(a) Remove the 3 bolts.

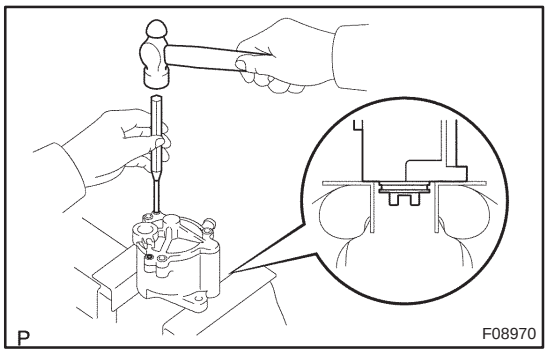

(b) Using soft jaws on the vise, place the vacuum pump assy on the vise, as shown in the illustration.

NOTICE:

Only place the vacuum pump assy, never hold the in–low of the housing with a vise.

(c) Using a pin punch and hammer, drive out the 2 straight pins.

(d) Remove the end cover and 2 O–rings.

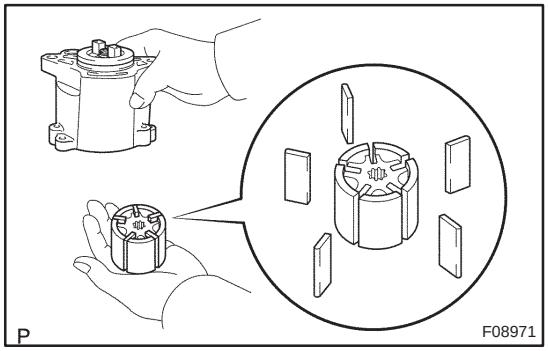

(e) Remove the vacuum pump rotor and 5 blades.

NOTICE:

Do not damage the housing with the rotor.

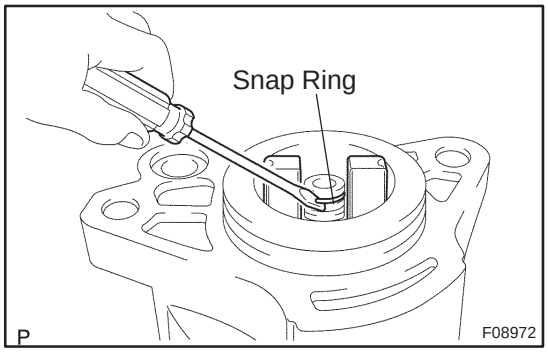

7. REMOVE VACUUM PUMP COUPLING

(a) Using a screwdriver, remove the snap ring.

(b) Remove the coupling.

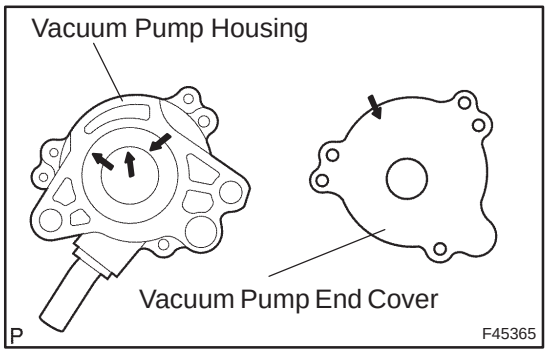

8. INSPECT VACUUM PUMP HOUSING

(a) Inspect the inside surface on the housing for scoring.

If necessary, replace the vacuum pump assy.

9. INSPECT VACUUM PUMP END COVER

(a) Inspect the inside surface on the vacuum pump end cover for scoring.

If necessary, replace the vacuum pump assy.

cardiagn.com

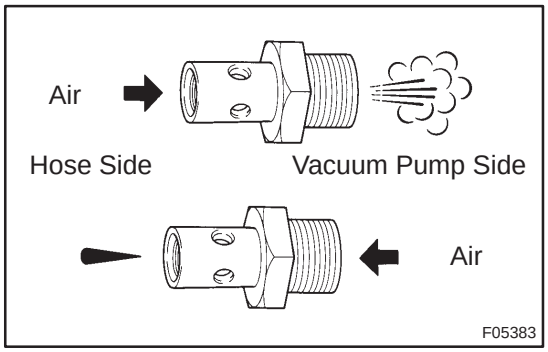

10. INSPECT CHECK VALVE SUB–ASSY

(a) Check that air flows from the hose side to the pump side.

(b) Check that air does not flow from the pump side to the hose side.

NOTICE:

Block off the 4 holes on the side surface of the check valve when checking.

If necessary, replace the check valve.

11. INSTALL VACUUM PUMP COUPLING

(a) Place the vacuum pump coupling to the rotor shaft.

(b) Install a new snap ring to the rotor shaft.

12. INSTALL VACUUM PUMP ROTOR SUB–ASSY

(a) Coat the rotor with engine oil, and install it to the rotor shaft.

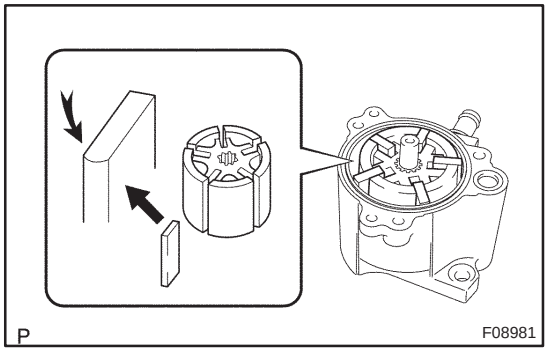

13. INSTALL VACUUM PUMP BLADE A

(a) Apply the engine oil to the rotor, and install the rotor in the housing.

(b) Apply the engine oil to the 5 new blades.

(c) Install the 5 blades with the round end facing outward.

NOTICE:

Install so that the blade attaches on the housing.

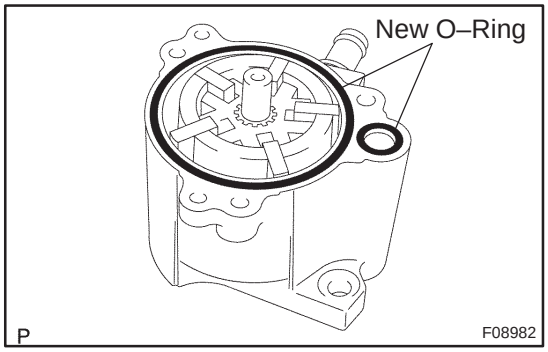

(d) Coat 2 new O–rings with engine oil, and install them on the housing.

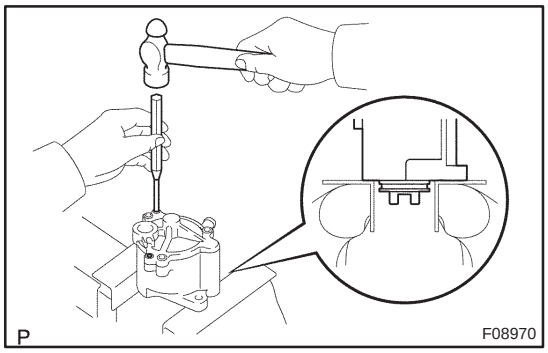

(e) Using soft jaws on the vise, place the vacuum pump on the vise, as shown in the illustration.

NOTICE:

Only place the vacuum pump assy, never hold the in–low of the housing with a vise.

(f) Place the end cover, and temporarily install the 3 bolts.

(g) Using a pin punch and hammer, drive in the 2 straight pins.

NOTICE:

Install so that the blade and end cover of the eccentric ring does not interfere with each other.

cardiagn.com

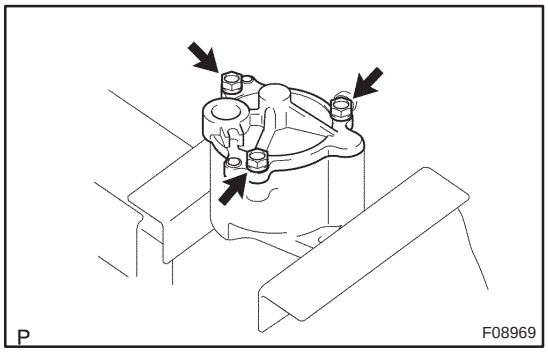

(h) Using soft jaws on the vise, hold the vacuum pump in the vise.

NOTICE:

Do not tighten the vise to tightly.

(i) Tighten the 3 bolts.
Torque: 7.8 N·m (80 kgf·cm, 69 in.·lbf)

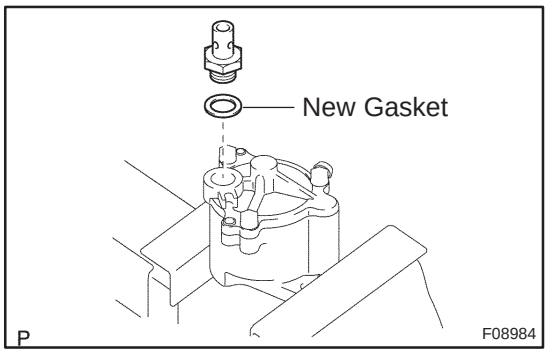

14. INSTALL CHECK VALVE SUB–ASSY

(a) Install the check valve sub–assy and a new gasket.
Torque: 74 N·m (750 kgf·cm, 54 ft·lbf)

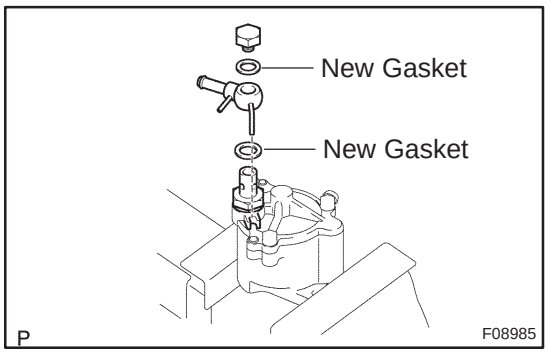

15. INSTALL VACUUM PUMP UNION

(a) Install the vacuum pump union and 2 new gaskets with the union bolt.
Torque: 14 N·m (140 kgf·cm, 10 ft·lbf)

HINT:
Align and insert the pin of the union into the matching hole of the casing.

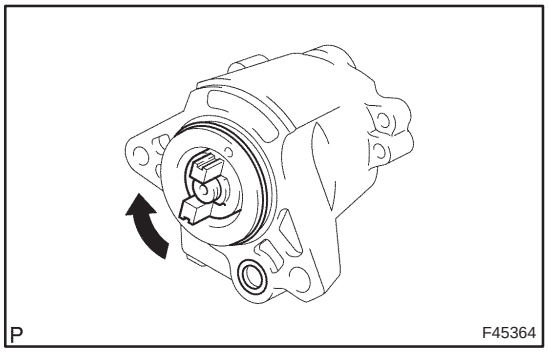

16. INSPECT VACUUM PUMP ASSY

(a) Turn the gear counterclockwise direction by hand when seeing from the vacuum pump gear direction and check for any abnormality such as dragging or torque fluctuation.

cardiagn.com

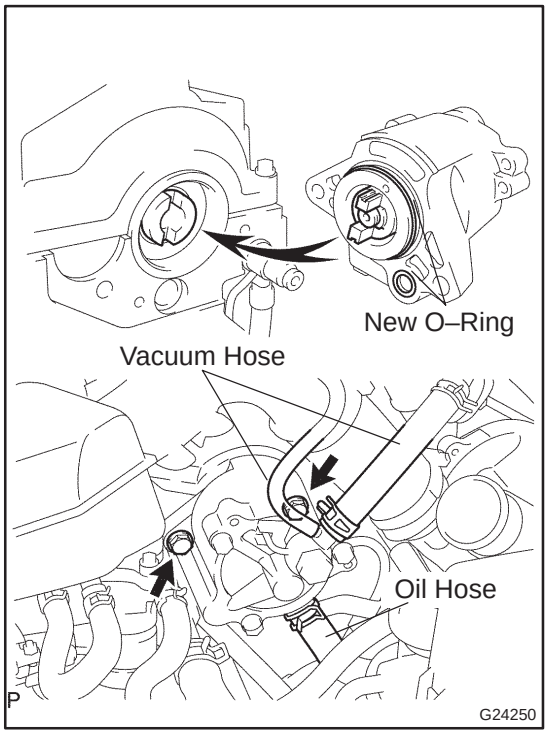

17. INSTALL VACUUM PUMP ASSY

(a) Coat 2 new O–rings with engine oil, and install them to the vacuum pump assy.

(b) Install the vacuum pump assy aligning the coupling with the slit of the camshaft.

(c) Install the 2 bolts.
Torque: 21 N·m (214 kgf·cm, 15 ft·lbf)

(d) Connect 2 vacuum hoses and oil hose.

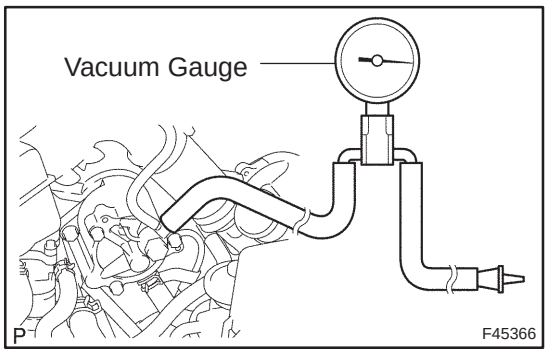

18. INSPECT CHECK VACUUM PUMP OPERATION

(a) Slide the clip, then disconnect the vacuum hose from vacuum pump assy.

(b) Connect the hose of the vacuum gauge to the vacuum pump assy.

(c) Block off another hose of the vacuum gauge with the hose clamp No.2.

(d) Start the engine and warm it up for more than 2 minutes.

(e) With the engine idle, check the negative pressure of the vacuum pump assy.
Standard: More than 650 mmHg (86.7 kPa).

(f) Remove the vacuum gauge from the vacuum pump assy.

(g) Connect the vacuum hose with the clip to the vacuum pump assy.

19. INSTALL AIR CLEANER CAP SUB–ASSY

cardiagn.com

YAWRATE SENSOR

320GM–02

REPLACEMENT

NOTICE:

- **Don't use the dropped or damaged yawrate sensor.**
- **Free from the foreing matters between yawrate sensor braket and body.**
- **Make sure the sensor direction.**

1. REMOVE FRONT SEAT ASSEMBLY LH (See page 72–11 or 72–16)

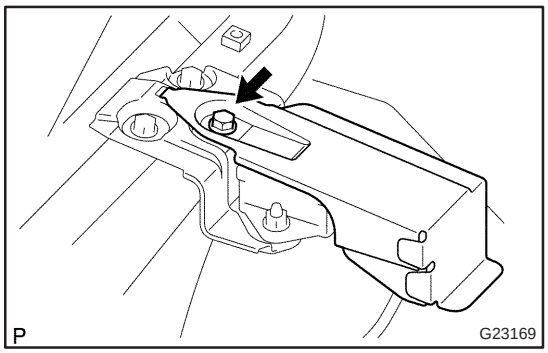

2. REMOVE YAWRATE SENSOR BRACKET

(a) Remove the bolt and upper part of the yawrate sensor bracket.

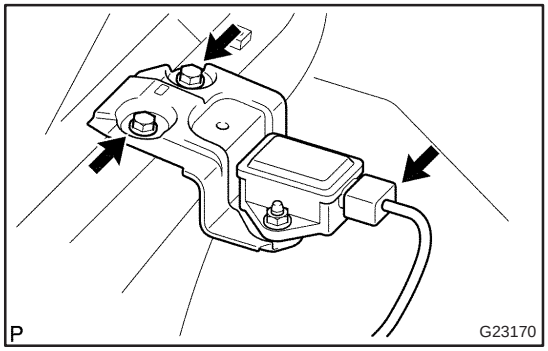

3. REMOVE YAWRATE SENSOR

(a) Disconnect the yawrate sensor connector from the yawrate sensor.

(b) Remove the 2 bolts and the yawrate sensor with the yawrate sensor bracket from the body.

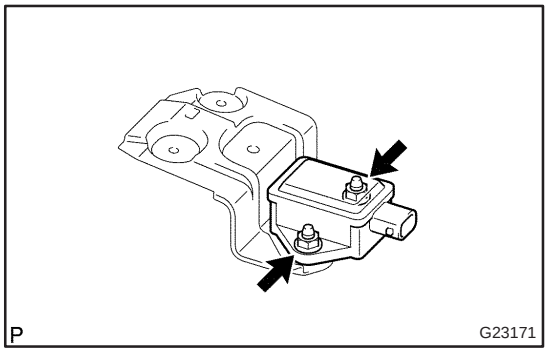

(c) Remove the 2 nuts and yawrate sensor from the yawrate sensor bracket.

4. INSTALL YAWRATE SENSOR

(a) Install the 2 nuts and yawrate sensor to the yawrate sensor bracket.
Torque: 6 N·m (61 ft·lbf, 53 in.·lbf)

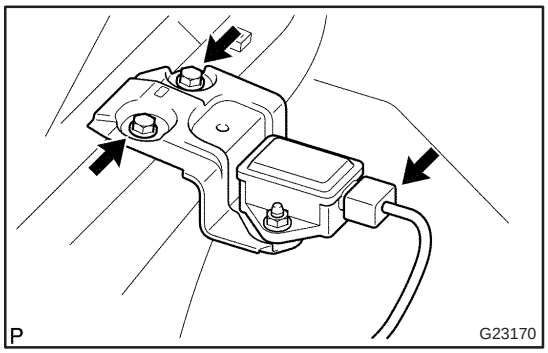

(b) Install the 2 bolts and the yawrate sensor with the yawrate sensor bracket to the body.
Torque: 21 N·m (214 ft·lbf, 15 ft·lbf)

(c) Connect the yawrate sensor connector to the yawrate sensor.

cardiagn.com

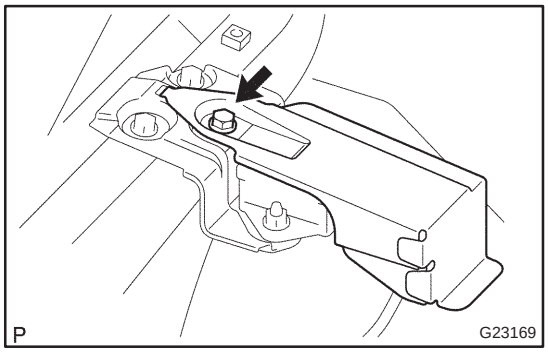

5. INSTALL YAWRATE SENSOR BRACKET

(a) Install the bolt and upper part og the yawrate sensor bracket.
Torque: 21 N·m (214 ft·lbf, 15 ft·lbf)

6. INSTALL FRONT SEAT ASSEMBLY LH (See page 72–11 or 72–16)

7. PERFORM YAWRATE SENSOR ZERO POINT CALIBRATION (See page 05–756)

cardiagn.com

YAWRATE SENSOR

320GM–02

REPLACEMENT

NOTICE:

- **Don't use the dropped or damaged yawrate sensor.**
- **Free from the foreing matters between yawrate sensor braket and body.**
- **Make sure the sensor direction.**

1. REMOVE FRONT SEAT ASSEMBLY LH (See page 72–11 or 72–16)

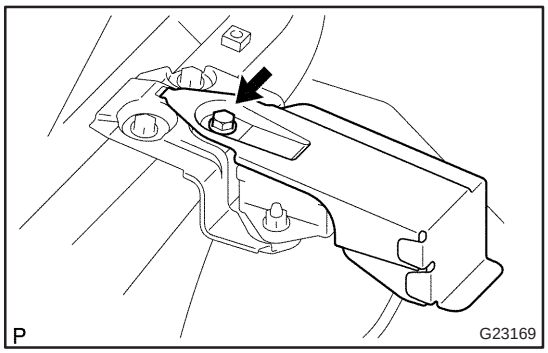

2. REMOVE YAWRATE SENSOR BRACKET

(a) Remove the bolt and upper part of the yawrate sensor bracket.

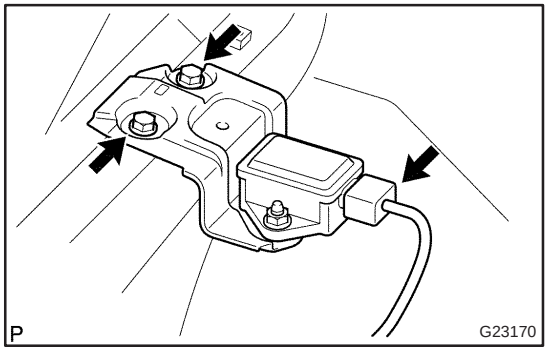

3. REMOVE YAWRATE SENSOR

(a) Disconnect the yawrate sensor connector from the yawrate sensor.

(b) Remove the 2 bolts and the yawrate sensor with the yawrate sensor bracket from the body.

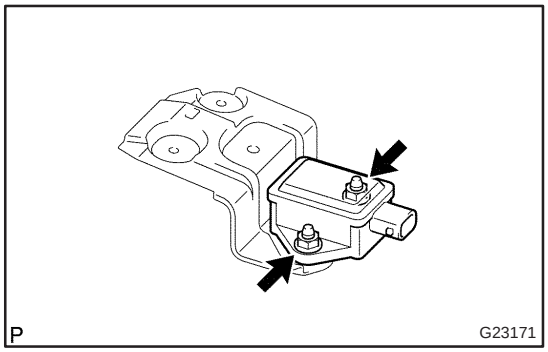

(c) Remove the 2 nuts and yawrate sensor from the yawrate sensor bracket.

4. INSTALL YAWRATE SENSOR

(a) Install the 2 nuts and yawrate sensor to the yawrate sensor bracket.
Torque: 6 N·m (61 ft·lbf, 53 in.·lbf)

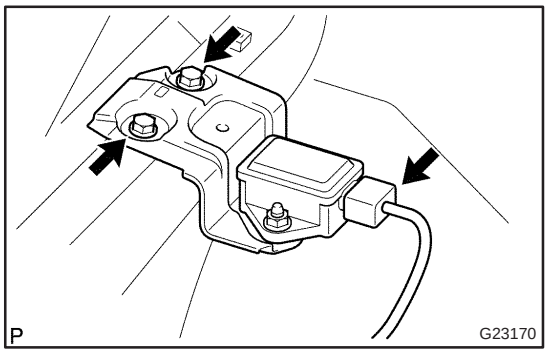

(b) Install the 2 bolts and the yawrate sensor with the yawrate sensor bracket to the body.
Torque: 21 N·m (214 ft·lbf, 15 ft·lbf)

(c) Connect the yawrate sensor connector to the yawrate sensor.

cardiagn.com

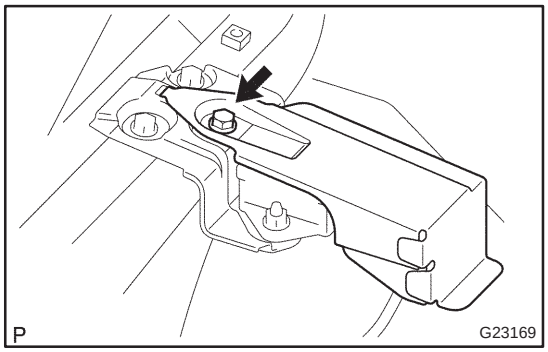

5. INSTALL YAWRATE SENSOR BRACKET

(a) Install the bolt and upper part og the yawrate sensor bracket.
Torque: 21 N·m (214 ft·lbf, 15 ft·lbf)

6. INSTALL FRONT SEAT ASSEMBLY LH (See page 72–11 or 72–16)

7. PERFORM YAWRATE SENSOR ZERO POINT CALIBRATION (See page 05–756)

cardiagn.com